DocuSign Envelope ID: BE6AD64C-5E2B-4550-B3E0-ABF9FCC2AAA9

09/08/99

PROJECT: 17BP.6.R.69

CONTRACT: DF00169

See Sheet 1A For Index of Sheets
See Sheet 1B For Conventional Symbols
See Sheet 1C For Survey Control Sheet

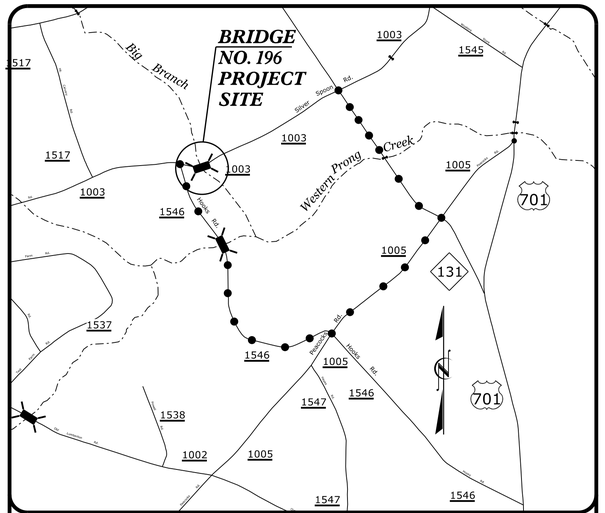

VICINITY MAP

OFF-SITE DETOUR

STATE OF NORTH CAROLINA
DIVISION OF HIGHWAYS

COLUMBUS COUNTY

STATE	STATE PROJECT REFERENCE NO.	SHEET NO.	TOTAL SHEETS
N.C.	17BP.6.R.69	1	

STATE PROJ. NO.	F.A. PROJ. NO.	DESCRIPTION
17BP.6.R.69	N/A	PE
17BP.6.R.69	N/A	R/W /UTIL.
17BP.6.R.69	N/A	CONST.

LOCATION: BRIDGE NO. 230196 OVER BIG BRANCH ON SR 1003 (SILVER SPOON RD.)

TYPE OF WORK: GRADING, DRAINAGE, PAVING & STRUCTURE

BRIDGE #230196

FINAL PLANS

4

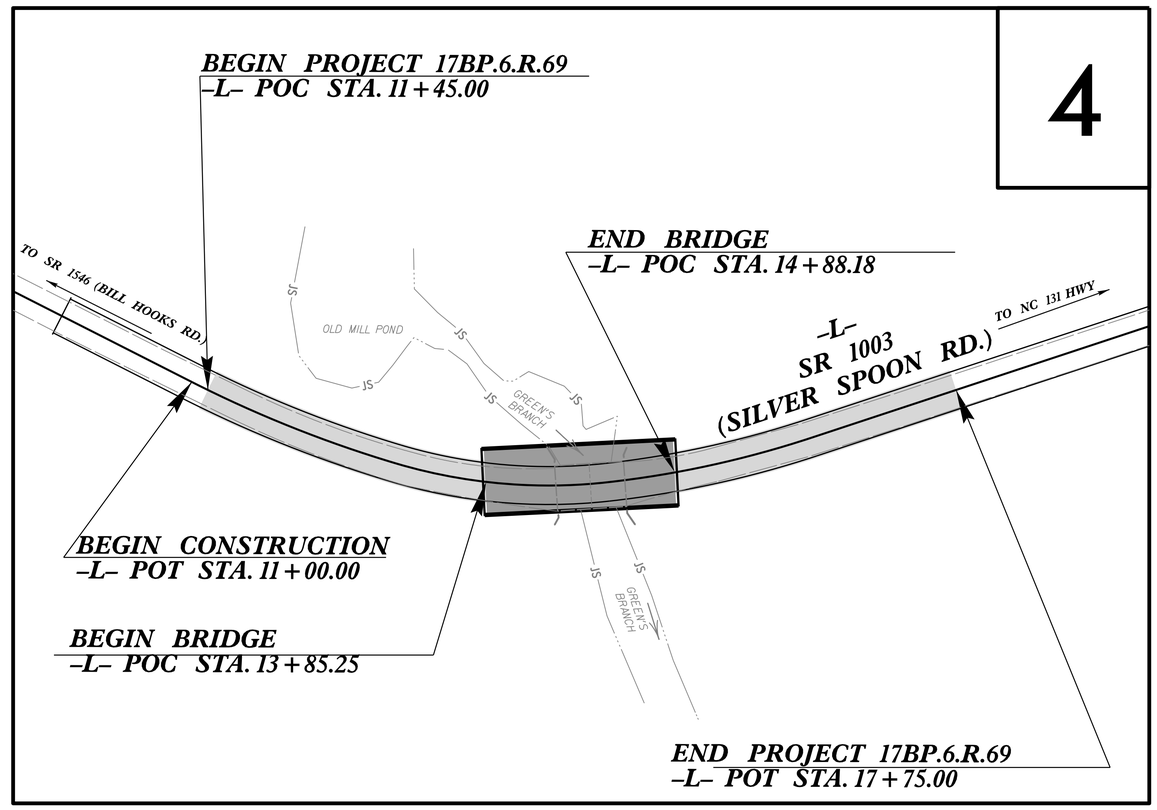

NAD 83/NA 2011

DOCUMENT NOT CONSIDERED FINAL UNLESS ALL SIGNATURES COMPLETED

GRAPHIC SCALES

30 15 0 30 60
PLANS

30 15 0 30 60
PROFILE (HORIZONTAL)

6 3 0 6 12
PROFILE (VERTICAL)

DESIGN DATA

ADT 2016 = 350

T = 6 % *

**V = 55 MPH

* TTST = 3% DUAL = 3%

FUNC. CLASS = RURAL LOCAL (SUBREGIONAL)

**DESIGN EXCEPTION NEEDED HORIZONTAL CURVE RADIUS & STOPING SIGHT DISTANCE

PROJECT LENGTH

LENGTH ROADWAY PROJECT 17BP.6.R.69	=	0.100 MILES
LENGTH STRUCTURE PROJECT 17BP.6.R.69	=	0.019 MILES
TOTAL LENGTH PROJECT 17BP.6.R.69	=	0.119 MILES

Prepared in the Office of:
WETHERILL ENGINEERING
1223 Jones Franklin Rd. Raleigh, N.C. 27606
License No. F-0377
Bus: 919.851.8077 Fax: 919.851.8107

Prepared for:
DIVISION OF HIGHWAYS
DIVISION 6
558 Gillespie Street
Fayetteville NC, 28301

2012 STANDARD SPECIFICATIONS

RIGHT OF WAY DATE:

LETTING DATE:
JUNE 20, 2017

NCDOT CONTACT:

EDWARD G. WETHERILL, PE
PROJECT ENGINEER

GREG S. PURVIS, PE
PROJECT DESIGN ENGINEER

CHRISTY W. HUFF, PE
DIVISION 6 BRIDGE PROGRAM MANAGER

HYDRAULICS ENGINEER

5/30/2017

DocuSigned by: Max Price
82CBB0D6FEB1484...
SIGNATURE:

NORTH CAROLINA PROFESSIONAL SEAL 023993 ENGINEER MAX S. PRICE
P.E.

ROADWAY DESIGN ENGINEER

5/30/2017

DocuSigned by: Greg S. Purvis
D1F0F7C255E3403...
SIGNATURE:

NORTH CAROLINA PROFESSIONAL SEAL 22999 ENGINEER GREGORY S. PURVIS
P.E.

STATE OF NORTH CAROLINA DEPARTMENT OF TRANSPORTATION

5/30/2017
...\PROJ\230196_Rdy_tsh.dgn
USER:RDodell

DocuSign Envelope ID: BE6AD64C-5E2B-4550-B3E0-ABF9FCC2AAA9

8/17/99

PROJECT REFERENCE NO.	SHEET NO.
17BP.6.R.69	1-A

ROADWAY DESIGN ENGINEER

NORTH CAROLINA PROFESSIONAL SEAL 022999 ENGINEER GREG S. PURVIS
DocuSigned by: Greg Purvis
5/30/2017

BRIDGE #230196

GENERAL NOTES

GENERAL NOTES: 2012 SPECIFICATIONS

EFFECTIVE: 01–17–12
REVISED: 07–30–2012

GRADING AND SURFACING OR RESURFACING AND WIDENING:

THE GRADE LINES SHOWN DENOTE THE FINISHED ELEVATION OF THE PROPOSED SURFACING AT GRADE POINTS SHOWN ON THE TYPICAL SECTIONS. WHERE NO GRADE LINES ARE SHOWN, THE PROFILES SHOWN DENOTE THE TOP ELEVATION OF THE EXISTING PAVEMENT ALONG THE CENTER LINE OF SURVEY ON WHICH THE PROPOSED RESURFACING WILL BE PLACED. GRADE LINES MAY BE ADJUSTED BY THE ENGINEER IN ORDER TO SECURE A PROPER TIE–IN.

CLEARING:

CLEARING ON THIS PROJECT SHALL BE PERFORMED TO THE LIMITS ESTABLISHED BY METHOD II. CLEARING LIMITS SHALL EXTEND 5' BEYOND OF THE TOE OF SLOPE WITH NO GRUBBING.

SUPERELEVATION:

ALL CURVES ON THIS PROJECT SHALL BE SUPERELEVATED IN ACCORDANCE WITH STD. NO. 225.04 USING THE RATE OF SUPERELEVATION AND RUNOFF SHOWN ON THE PLANS. SUPERELEVATION IS TO BE REVOLVED ABOUT THE GRADE POINTS SHOWN ON THE TYPICAL SECTIONS.

SHOULDER CONSTRUCTION:

ASPHALT, EARTH, AND CONCRETE SHOULDER CONSTRUCTION ON THE HIGH SIDE OF SUPERELEVATED CURVES SHALL BE IN ACCORDANCE WITH STD. NO. 560.01.

GUARDRAIL:

THE GUARDRAIL LOCATIONS SHOWN ON THE PLANS MAY BE ADJUSTED DURING CONSTRUCTION AS DIRECTED BY THE ENGINEER. THE CONTRACTOR SHOULD CONSULT WITH THE ENGINEER PRIOR TO ORDERING GUARDRAIL MATERIAL.

SUBSURFACE PLANS:

NO SUBSURFACE PLANS ARE AVAILABLE ON THIS PROJECT. THE CONTRACTOR SHOULD MAKE HIS OWN INVESTIGATION AS TO THE SUBSURFACE CONDITIONS.

UTILITIES:

UTILITY OWNERS ON THIS PROJECT ARE
POWER – BRUNSWICK EMC
PHONE – STAR TELEPHONE
WATER – COLUMBUS COUNTY PUBLIC UTILITIES

ANY RELOCATION OF EXISTING UTILITIES WILL BE ACCOMPLISHED BY OTHERS

RIGHT OF WAY MARKERS:

ALL RIGHT OF WAY MARKERS ON THIS PROJECT SHALL BE PLACED BY CONTRACT
ANY RELOCATION OF EXISTING UTILITIES WILL BE ACCOMPLISHED BY OTHERS

END BENTS:

THE ENGINEER SHALL CHECK THE STRUCTURE END BENT PLANS, DETAIL, AND CROSS–SECTION PRIOR TO SETTING OF THE SLOPE STAKES FOR THE EMBANKMENT OR EXCAVATION APPROACHING A BRIDGE.

LIST OF ROADWAY STANDARD DRAWINGS

2012 ROADWAY ENGLISH STANDARD DRAWINGS

EFF. 01–17–12
REV. 02–29–2016

The following Roadway Standards as appear in "Roadway Standard Drawings" Highway Design Branch – N. C. Department of Transportation – Raleigh, N. C., Dated January, 2012 are applicable to this project and by reference hereby are considered a part of these plans:

STD.NO.	TITLE
DIVISION 2 – EARTHWORK	
200.02	Method of Clearing – Method II Modified
225.02	Guide for Grading Subgrade – Secondary and Local
225.04	Method of Obtaining Superelevation – Two Lane Pavement
DIVISION 3 – PIPE CULVERTS	
300.01	Method of Pipe Installation
DIVISION 4 – MAJOR STRUCTURES	
422.10	Reinforced Bridge Approach Fills
DIVISION 5 – SUBGRADE, BASES AND SHOULDERS	
560.01	Method of Shoulder Construction – High Side of Superelevated Curve – Method I
DIVISION 8 – INCIDENTALS	
840.00	Concrete Base Pad for Drainage Structures
840.29	Frames and Narrow Slot Grates
840.35	Traffic Bearing Grated Drop Inlet
846.01	Concrete Curb, Gutter and Curb & Gutter
862.01	Guardrail Placement
862.02	Guardrail Installation
862.03	Structure Anchor Units
876.02	Guide for Rip Rap at Pipe Outlets

INDEX OF SHEETS

SHEET NUMBER	SHEET
1	TITLE SHEET
1–A	INDEX OF SHEETS, GENERAL NOTES, AND LIST OF STANDARD DRAWINGS
1–B	CONVENTIONAL SYMBOLS
2	TYPICAL SECTIONS, PAVEMENT SCHEDULE, & MISCELLANEOUS DETAILS
2–A	STRUCTURE ANCHOR UNIT DETAIL SHEETS 2 & 3 OF 7
3	SUMMARY OF DRAINAGE QUANTITIES, GUARDRAIL SUMMARY, EARTHWORK SUMMARY, PAVEMENT REMOVAL SUMMARY , AND SHOULDER BERM GUTTER SUMMARY
4	PLAN & PROFILE SHEET
TMP–1 THRU TMP–2A	TRAFFIC CONTROL PLANS
PMP–1 THRU PMP–2	PAVEMENT MARKING PLANS
EC–1 THRU EC–06	EROSION CONTROL PLANS
RF–1	REFORESTATION
UO–1 THRU UO–2	UTILITIES BY OTHERS PLANS
UC–1 THRU UC–3	UTILITIES CONSTRUCTION
X–1	CROSS–SECTION SUMMARY SHEET
X–2 THRU X–4	CROSS–SECTIONS
S–1 THRU S–18	STRUCTURE PLANS
S–N	STRUCTURE NOTES

5/24/2017
...\Roadway\Proj\230196_psh_1a.dgn
SETBARIdgn

12/2/2016

PROJECT REFERENCE NO.	SHEET NO.
17BP.6.R.69	1B

STATE OF NORTH CAROLINA, DIVISION OF HIGHWAYS

CONVENTIONAL PLAN SHEET SYMBOLS

Note: Not to Scale

**S.U.E. = Subsurface Utility Engineering*

BOUNDARIES AND PROPERTY:

- State Line
- County Line
- Township Line
- City Line
- Reservation Line
- Property Line
- Existing Iron Pin — EIP
- Computed Property Corner
- Property Monument — ECM
- Parcel/Sequence Number — 123
- Existing Fence Line
- Proposed Woven Wire Fence
- Proposed Chain Link Fence
- Proposed Barbed Wire Fence
- Existing Wetland Boundary — WLB
- Proposed Wetland Boundary — WLB
- Existing Endangered Animal Boundary — EAB
- Existing Endangered Plant Boundary — EPB
- Existing Historic Property Boundary — HPB
- Known Contamination Area: Soil — S
- Potential Contamination Area: Soil — S
- Known Contamination Area: Water — W
- Potential Contamination Area: Water — W
- Contaminated Site: Known or Potential

BUILDINGS AND OTHER CULTURE:

- Gas Pump Vent or U/G Tank Cap
- Sign — S
- Well — W
- Small Mine
- Foundation
- Area Outline
- Cemetery
- Building
- School
- Church
- Dam

HYDROLOGY:

- Stream or Body of Water
- Hydro, Pool or Reservoir
- Jurisdictional Stream — JS
- Buffer Zone 1 — BZ 1
- Buffer Zone 2 — BZ 2
- Flow Arrow
- Disappearing Stream
- Spring
- Wetland
- Proposed Lateral, Tail, Head Ditch — FLOW
- False Sump

RAILROADS:

- Standard Gauge — CSX TRANSPORTATION
- RR Signal Milepost — MILEPOST 35
- Switch — SWITCH
- RR Abandoned
- RR Dismantled

RIGHT OF WAY & PROJECT CONTROL:

- Secondary Horiz and Vert Control Point
- Primary Horiz Control Point
- Primary Horiz and Vert Control Point
- Exist Permanent Easment Pin and Cap
- New Permanent Easement Pin and Cap
- Vertical Benchmark
- Existing Right of Way Marker
- Existing Right of Way Line
- New Right of Way Line — RW
- New Right of Way Line with Pin and Cap — RW
- New Right of Way Line with Concrete or Granite R/W Marker — RW
- New Control of Access Line with Concrete C/A Marker — CA
- Existing Control of Access — CA
- New Control of Access — CA
- Existing Easement Line — E
- New Temporary Construction Easement — E
- New Temporary Drainage Easement — TDE
- New Permanent Drainage Easement — PDE
- New Permanent Drainage / Utility Easement — DUE
- New Permanent Utility Easement — PUE
- New Temporary Utility Easement — TUE
- New Aerial Utility Easement — AUE

ROADS AND RELATED FEATURES:

- Existing Edge of Pavement
- Existing Curb
- Proposed Slope Stakes Cut — C
- Proposed Slope Stakes Fill — F
- Proposed Curb Ramp — CR
- Existing Metal Guardrail
- Proposed Guardrail
- Existing Cable Guiderail
- Proposed Cable Guiderail
- Equality Symbol
- Pavement Removal

VEGETATION:

- Single Tree
- Single Shrub
- Hedge
- Woods Line
- Orchard
- Vineyard — Vineyard

EXISTING STRUCTURES:

MAJOR:

- Bridge, Tunnel or Box Culvert — CONC
- Bridge Wing Wall, Head Wall and End Wall — CONC WW

MINOR:

- Head and End Wall — CONC HW
- Pipe Culvert
- Footbridge
- Drainage Box: Catch Basin, DI or JB — CB
- Paved Ditch Gutter
- Storm Sewer Manhole — S
- Storm Sewer — S

UTILITIES:

POWER:

- Existing Power Pole
- Proposed Power Pole
- Existing Joint Use Pole
- Proposed Joint Use Pole
- Power Manhole — P
- Power Line Tower
- Power Transformer
- U/G Power Cable Hand Hole
- H-Frame Pole
- U/G Power Line LOS B (S.U.E.*) — P
- U/G Power Line LOS C (S.U.E.*) — P
- U/G Power Line LOS D (S.U.E.*) — P

TELEPHONE:

- Existing Telephone Pole
- Proposed Telephone Pole
- Telephone Manhole — T
- Telephone Pedestal — T
- Telephone Cell Tower
- U/G Telephone Cable Hand Hole
- U/G Telephone Cable LOS B (S.U.E.*) — T
- U/G Telephone Cable LOS C (S.U.E.*) — T
- U/G Telephone Cable LOS D (S.U.E.*) — T
- U/G Telephone Conduit LOS B (S.U.E.*) — TC
- U/G Telephone Conduit LOS C (S.U.E.*) — TC
- U/G Telephone Conduit LOS D (S.U.E.*) — TC
- U/G Fiber Optics Cable LOS B (S.U.E.*) — T FO
- U/G Fiber Optics Cable LOS C (S.U.E.*) — T FO
- U/G Fiber Optics Cable LOS D (S.U.E.*) — T FO

WATER:

- Water Manhole — W
- Water Meter
- Water Valve
- Water Hydrant
- U/G Water Line LOS B (S.U.E*)
- U/G Water Line LOS C (S.U.E*)
- U/G Water Line LOS D (S.U.E*)
- Above Ground Water Line — A/G Water

TV:

- TV Pedestal — C
- TV Tower
- U/G TV Cable Hand Hole — HH
- U/G TV Cable LOS B (S.U.E.*) — TV
- U/G TV Cable LOS C (S.U.E.*) — TV
- U/G TV Cable LOS D (S.U.E.*) — TV
- U/G Fiber Optic Cable LOS B (S.U.E.*) — TV FO
- U/G Fiber Optic Cable LOS C (S.U.E.*) — TV FO
- U/G Fiber Optic Cable LOS D (S.U.E.*) — TV FO

GAS:

- Gas Valve
- Gas Meter
- U/G Gas Line LOS B (S.U.E.*) — G
- U/G Gas Line LOS C (S.U.E.*) — G
- U/G Gas Line LOS D (S.U.E.*) — G
- Above Ground Gas Line — A/G Gas

SANITARY SEWER:

- Sanitary Sewer Manhole
- Sanitary Sewer Cleanout
- U/G Sanitary Sewer Line — SS
- Above Ground Sanitary Sewer — A/G Sanitary Sewer
- SS Forced Main Line LOS B (S.U.E.*) — FSS
- SS Forced Main Line LOS C (S.U.E.*) — FSS
- SS Forced Main Line LOS D (S.U.E.*) — FSS

MISCELLANEOUS:

- Utility Pole
- Utility Pole with Base
- Utility Located Object
- Utility Traffic Signal Box — S
- Utility Unknown U/G Line LOS B (S.U.E.*) — ?UTL
- U/G Tank; Water, Gas, Oil
- Underground Storage Tank, Approx. Loc. — UST
- A/G Tank; Water, Gas, Oil
- Geoenvironmental Boring
- U/G Test Hole LOS A (S.U.E.*)
- Abandoned According to Utility Records — AATUR
- End of Information — E.O.I.

PROJECT REFERENCE NO.	SHEET NO.
17BP.6.R.68	1C-1
Location and Surveys	

SURVEY CONTROL SHEET 230084

PRELIMINARY ROW MARKER PERMANENT EASEMENT-E

ALIGN	STATION	OFFSET	NORTH	EAST
L	15+49.25	30.00	116969.19799	2061940.57705
L	16+09.88	50.29	117033.06613	2061937.54021
L	16+08.05	61.57	117035.43704	2061948.72242
L	16+27.79	64.78	117055.00210	2061944.57412
L	16+29.62	53.50	117052.63119	2061933.39191
L	17+85.32	53.50	117197.77450	2061877.03764
L	17+85.55	63.71	117201.67757	2061886.47647
L	18+05.54	63.28	117220.15974	2061878.83386
L	18+05.32	53.07	117216.25667	2061869.39503
L	18+41.00	51.51	117248.95619	2061855.03285
L	18+41.00	30.00	117241.17011	2061834.97941
L	17+91.00	30.00	117194.56009	2061853.07652
L	19+83.10	45.33	117379.18607	2061797.83369
L	19+83.10	30.00	117373.63875	2061783.54629
L	14+27.52	-30.00	116833.49414	2061930.14005
L	14+47.47	-30.00	116852.15528	2061922.27191
L	14+50.14	-47.74	116847.87007	2061904.84248
L	14+30.86	-50.86	116828.44845	2061909.61749

BL

POINT	DESC.	NORTH	EAST	ELEVATION	L STATION	OFFSET
1	230084 GPS-1	116265.1100	2062325.9500	71.40	OUTSIDE PROJECT LIMITS	
2	230084-GPS-2	116595.9700	2062077.1700	65.21	11+52.59	14.98 LT
101	BL-101	117093.7240	2061843.4890	59.03	17+00.47	15.43 LT
102	BL-102	117565.3460	2061689.9440	60.62	OUTSIDE PROJECT LIMITS	

BM1 ELEVATION = 56.78
N 117077 E 2061759
L STATION 17+15.00 100 LEFT
BENCH TIE SET IN 18" CYPRESS

L

TYPE	STATION	NORTH	EAST
POT	10+00.00	116481.4602	2062179.5777
PC	11+25.93	116582.9241	2062104.9884
PCC	13+71.19	116793.8075	2061980.5900
PT	14+95.13	116907.8936	2061932.1976
POT	20+82.50	117455.4423	2061719.6028

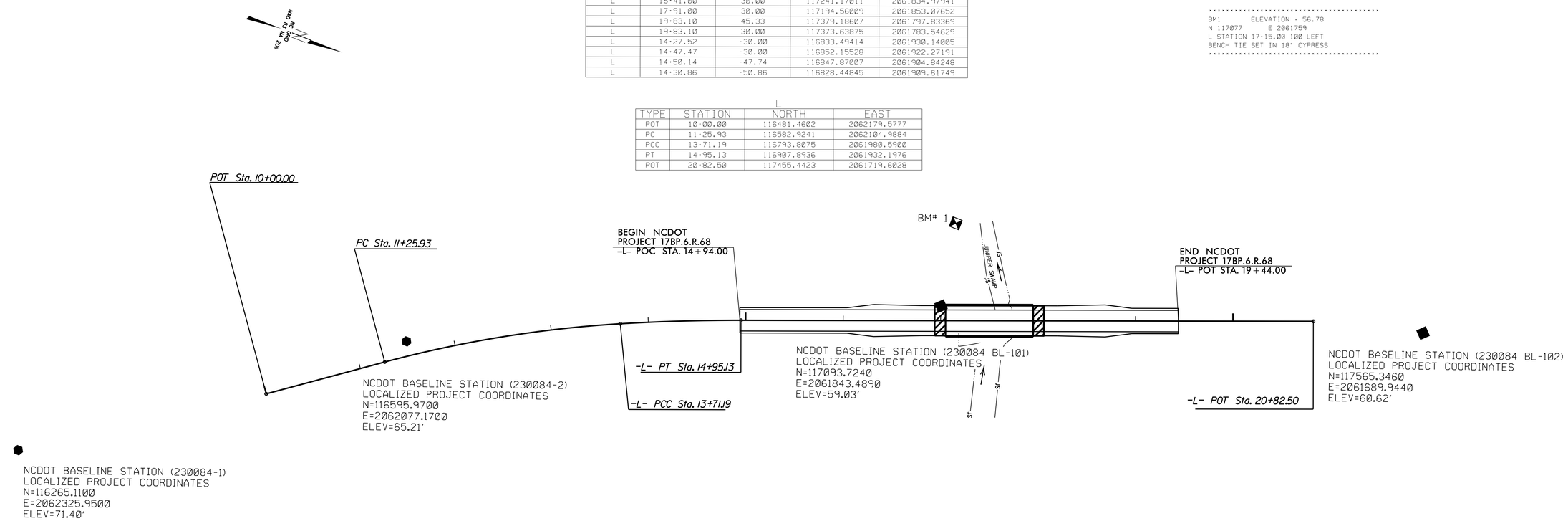

DATUM DESCRIPTION

THE LOCALIZED COORDINATE SYSTEM DEVELOPED FOR THIS PROJECT IS BASED ON THE STATE PLANE COORDINATES ESTABLISHED BY NCDOT FOR MONUMENT "230084-2"
WITH NAD 83/NSRS 2007 STATE PLANE GRID COORDINATES OF
NORTHING: 116595.9700(ft) EASTING: 2062077.1700(ft)
ELEVATION: 65.21(ft)
THE AVERAGE COMBINED GRID FACTOR USED ON THIS PROJECT (GROUND TO GRID) IS: 1.000085336
THE N.C. LAMBERT GRID BEARING AND LOCALIZED HORIZONTAL GROUND DISTANCE FROM "230084-2" TO -L- STATION 10+00.00 IS
N34°04'49.51"W 261.21'
ALL LINEAR DIMENSIONS ARE LOCALIZED HORIZONTAL DISTANCES
VERTICAL DATUM USED IS NAVD 88

NOTE: DRAWING NOT TO SCALE

NOTES:

⊙ *INDICATES GEODETIC CONTROL MONUMENTS USED OR SET FOR HORIZONTAL AND VERTICAL PROJECT CONTROL BY THE NCDOT LOCATION AND SURVEYS UNIT. PROJECT CONTROL ESTABLISHED USING GNSS (GLOBAL NAVIGATION SATELLITE SYSTEM).*

THE CONTROL DATA FOR THIS PROJECT CAN BE FOUND ELECTRONICALLY BY SELECTING PROJECT CONTROL DATA AT:
HTTPS://CONNECT.NCDOT.GOV/RESOURCES/LOCATION/

THE FILES TO BE FOUND ARE AS FOLLOWS:
230084_LS_CONTROL.TXT

SITE CALIBRATION INFORMATION HAS NOT BEEN PROVIDED FOR THIS PROJECT. IF FURTHER INFORMATION IS NEEDED, PLEASE CONTACT THE LOCATION AND SURVEYS UNIT.

6/2/99
5/18/2017
r:\Roadway\Proj\230084_ls_1c-1 (1).dgn
USER: Rdavis

$$$$$$SYSTIME$$$$$
$$$$$$$$$$$$$$$$DGN$$$$$$$$$$$$$$$
$$$$USERNAME$$$$

DocuSign Envelope ID: D07402E6-D2E4-4128-B0A7-3560789442FA

STATE OF NORTH CAROLINA
DEPT. OF TRANSPORTATION
DIVISION OF HIGHWAYS
RALEIGH, N.C.

ENGLISH DETAIL DRAWING FOR
STRUCTURE ANCHOR UNITS
GUARDRAIL ANCHOR UNIT, TYPE III FOR ATTACHMENT TO RAIL ON BRIDGE - SUB REGIONAL TIER

SHEET 2 OF 7
862d03

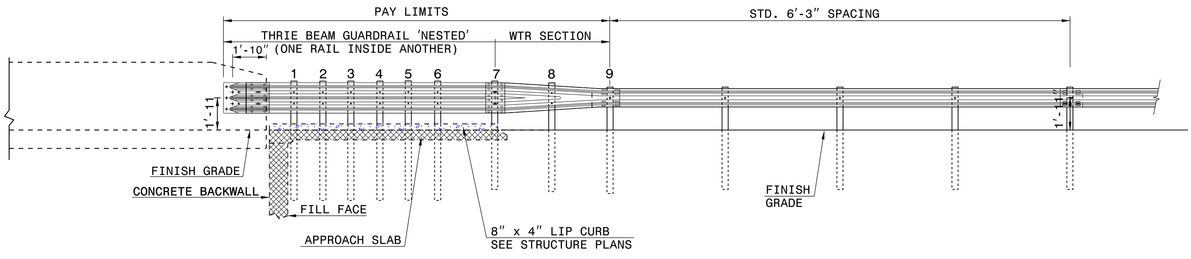

ELEVATION

NOTE:
**POST NOT REQUIRED FOR SKEW ANGLES GREATER THAN 150° OR LESS THAN 30° UNLESS OTHERWISE DIRECTED BY THE ENGINEER.
*THE DISTANCE FROM END OF BRIDGE RAIL TO CENTER LINE OF THE FIRST POST SHOULD BE 11½" IF CONCRETE BACKWALL IS NOT PRESENT.
-SHOULDER BERM GUTTER MUST BE INSTALLED TO THE LIMITS 8" x 4" LIP CURB IS SHOWN IF ANCHOR UNIT IS NOT ADJACENT TO AN APPROACH SLAB.
-MEASURE GUARDRAIL HEIGHT FROM THE TOP OF ADJACENT SURFACE (SHOULDER, BERM, OR GUTTER).
-LAP JOINTS IN THE DIRECTION OF TRAFFIC FLOW.
-SEE SHEET 3 FOR POST SECTIONS 1 THRU 9.

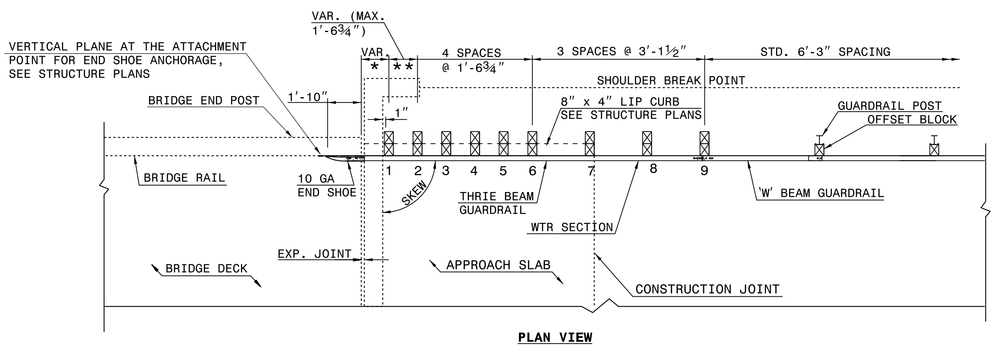

PLAN VIEW

GUARDRAIL ANCHOR UNIT, TYPE III FOR ATTACHMENT TO RAIL ON BRIDGE - SUB REGIONAL TIER

STATE OF NORTH CAROLINA
DEPT. OF TRANSPORTATION
DIVISION OF HIGHWAYS
RALEIGH, N.C.

ENGLISH DETAIL DRAWING FOR
STRUCTURE ANCHOR UNITS
GUARDRAIL ANCHOR UNIT, TYPE III FOR ATTACHMENT TO RAIL ON BRIDGE - SUB REGIONAL TIER

SHEET 2 OF 7
862d03

STATE OF NORTH CAROLINA
DEPT. OF TRANSPORTATION
DIVISION OF HIGHWAYS
RALEIGH, N.C.

ENGLISH DETAIL DRAWING FOR
STRUCTURE ANCHOR UNITS
GUARDRAIL ANCHOR UNIT, TYPE III

SHEET 3 OF 7
862d03

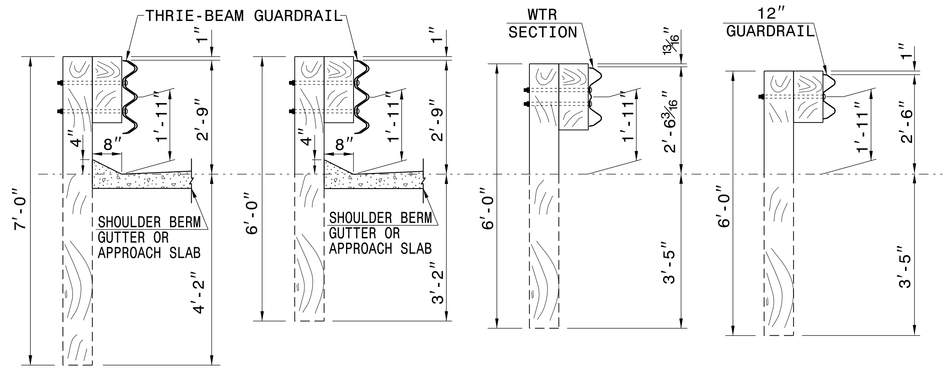

SECTION OF THRIE BEAM POSTS 1 THRU 6 | **SECTION OF THRIE BEAM POST 7** | **SECTION OF WTR BEAM POST 8** | **SECTION OF 'W' BEAM POST 9**

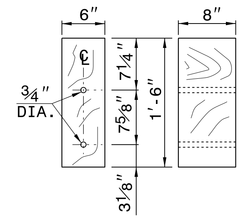

THRIE BEAM OFFSET BLOCK

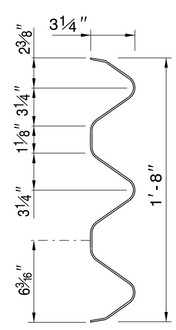

THRIE-BEAM SECTION

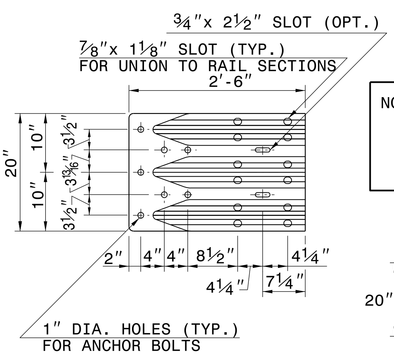

END SHOE

NOTE: THE MID POST AND OFFSET BLOCK OF THE WTR SECTION WILL REQUIRE SPECIAL BOLT HOLE DRILLING IN THE THRIE BEAM OFFSET BLOCK AND LINE POST.

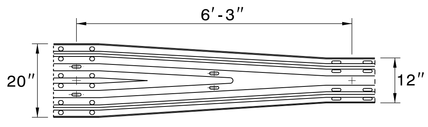

WTR SECTION
ELEVATION VIEW

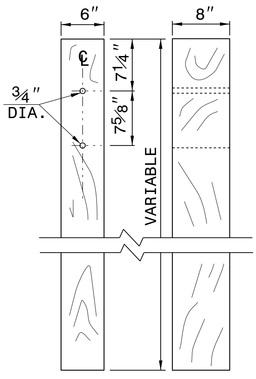

THRIE BEAM LINE POST

STATE OF NORTH CAROLINA
DEPT. OF TRANSPORTATION
DIVISION OF HIGHWAYS
RALEIGH, N.C.

ENGLISH DETAIL DRAWING FOR
STRUCTURE ANCHOR UNITS
GUARDRAIL ANCHOR UNIT, TYPE III

SHEET 3 OF 7
862d03

CONTRACT STANDARDS AND DEVELOPMENT UNIT
Office 919-707-6950 FAX 919-250-4119

SEE TITLE BLOCK

ORIGINAL BY: J. HOWERTON DATE: 06-22-12
MODIFIED BY: DATE:
CHECKED BY: DATE:
FILE SPEC.:

DOCUMENT NOT CONSIDERED FINAL UNLESS ALL SIGNATURES COMPLETED

DocuSigned by: Joel S. Howerton
NORTH CAROLINA PROFESSIONAL SEAL 022966 ENGINEER
JOEL S. HOWERTON
7/13/2017

PROJECT REFERENCE NO.: TBP.6.R.69
SHEET NO.: 2A

DocuSign Envelope ID: BE6AD64C-5E2B-4550-B3E0-ABF9FCC2AAA9

6/2/99

PAVEMENT SCHEDULE

C1	PROP. APPROX. 3″ ASPHALT CONCRETE SURFACE COURSE, TYPE SF9.5A, AT AN AVERAGE RATE OF 165 LBS. PER SQ. YD. IN EACH OF TWO LAYERS.
C2	PROP. VAR. DEPTH ASPHALT CONCRETE SURFACE COURSE, TYPE SF9.5A, AT AN AVERAGE RATE OF 110 LBS. PER SQ. YD. PER 1″ DEPTH. TO BE PLACED IN LAYERS NOT TO EXCEED 1½″ IN DEPTH.
E1	PROP. APPROX. 5½″ ASPHALT CONCRETE BASE COURSE, TYPE B25.0B, AT AN AVERAGE RATE OF 627 LBS. PER SQ. YD.
E2	PROP. VAR. DEPTH ASPHALT CONCRETE BASE COURSE, TYPE B25.0B, AT AN AVERAGE RATE OF 114 LBS. PER SQ. YD. PER 1″ DEPTH. TO BE PLACED IN LAYERS NOT LESS THAN 3″ IN DEPTH OR GREATER THAN 5½″ IN DEPTH.
T	EARTH MATERIAL.
U	EXISTING PAVEMENT.
V	MILLING BITUMINOUS PAVEMENT. (SEE MILLING DETAIL)
W	VARIABLE DEPTH ASPHALT PAVEMENT (SEE WEDGING DETAIL)

NOTE: PAVEMENT EDGE SLOPES ARE 1:1 UNLESS SHOWN OTHERWISE.

DETAIL A
BANK STABILIZATION
(Not to Scale)

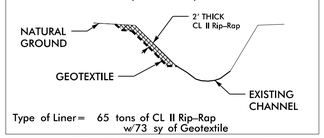

Type of Liner= 65 tons of CL II Rip-Rap w/73 sy of Geotextile

–L– STA. 13+75 TO STA 14+15 (LT)

DETAIL B
ROCK FILL IN POND
(Not to Scale)

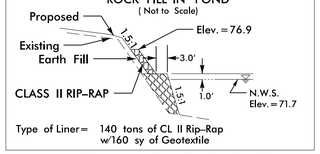

Type of Liner= 140 tons of CL II Rip-Rap w/160 sy of Geotextile

–L– STA. 12+60 TO STA. 13+25 (LT)

DETAIL C
SPECIAL LATERAL 'V' DITCH
(Not to Scale)

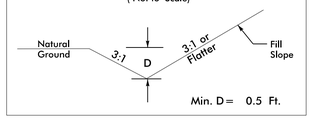

Min. D= 0.5 Ft.

–L– STA. 11+45 TO STA. 12+60 (LT)

DETAIL D
SPECIAL LATERAL 'V' DITCH
(Not to Scale)

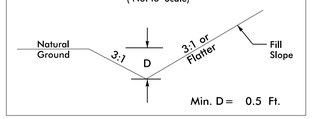

Min. D= 0.5 Ft.

–L– STA. 11+50 TO STA. 13+00 (RT)

PROJECT REFERENCE NO.	SHEET NO.
17BP.6.R.69	2A–1
ROADWAY DESIGN ENGINEER	HYDRAULICS ENGINEER
5/30/2017	5/30/2017

WETHERILL ENGINEERING
1223 Jones Franklin Rd.
Raleigh, N.C. 27606
License No. F-0377
Bus: 919 851 8077
Fax: 919 851 8107

TRANSPORTATION PLANNING/DESIGN - BRIDGE/STRUCTURE DESIGN
CIVIL/SITE DESIGN - GIS/GPS - CONSTRUCTION OBSERVATION

DOCUMENT NOT CONSIDERED FINAL UNLESS ALL SIGNATURES COMPLETED

BRIDGE #230196

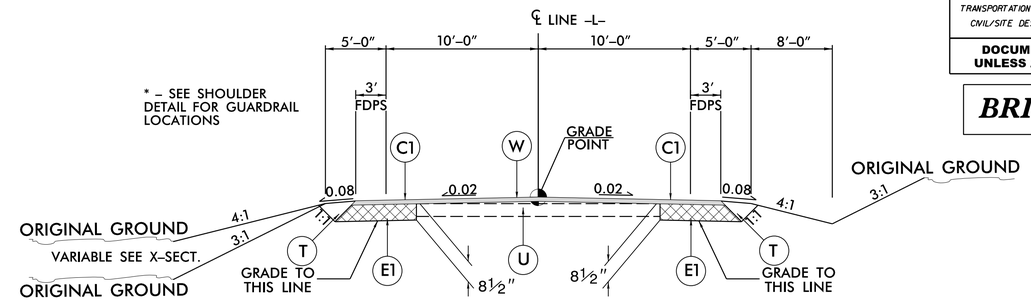

TYPICAL SECTION NO. 1

USE TYPICAL SECTION NO. 1 AS FOLLOWS:
–L– STA. 11+45.00 TO –L– STA. 13+36.50
–L– STA. 15+36.90 TO –L– STA. 17+75.00

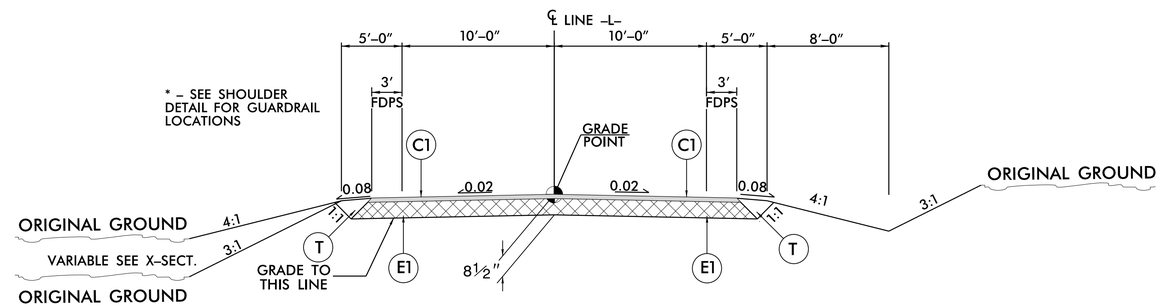

TYPICAL SECTION NO. 2

USE TYPICAL SECTION NO. 2 AS FOLLOWS:
–L– STA. 13+36.50 TO –L– STA. 13+85.25 (BEGIN BRIDGE)
–L– STA. 14+88.18 (END BRIDGE) TO –L– STA. 15+36.90

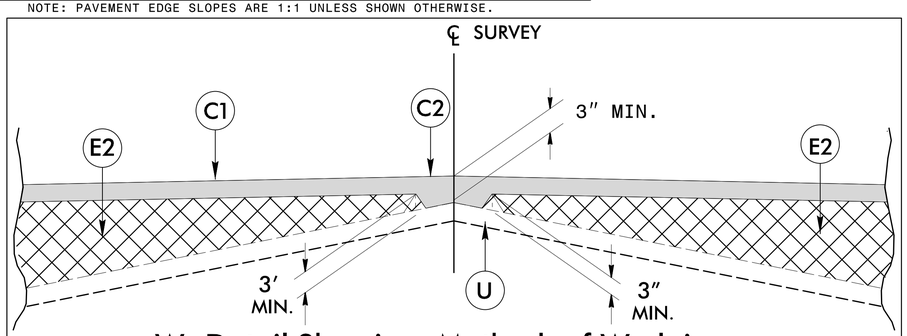

W: Detail Showing Method of Wedging

MILLING AT PAVEMENT TIE–INS

NOTES TO CONTRACTOR

For surface mixes over 1″ in thickness, mill the existing pavement in accordance with the following sketch as directed by the Engineer.

Locations shall include ties into existing concrete pavement, at bridge approaches where the bridge will not be resurfaced, and at the beginning and ending point of each resurfacing map.

Perform the work in accordance with Section 607 of the January 2012 North Carolina Department of Transportation Standard Specifications for Roads and Structures. Resurfacing will be accomplished at the same time as the milling operation.

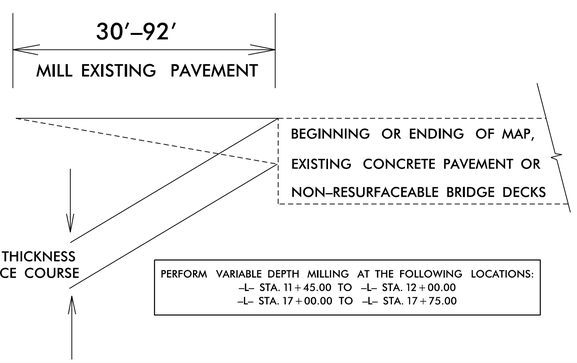

PERFORM VARIABLE DEPTH MILLING AT THE FOLLOWING LOCATIONS:
–L– STA. 11+45.00 TO –L– STA. 12+00.00
–L– STA. 17+00.00 TO –L– STA. 17+75.00

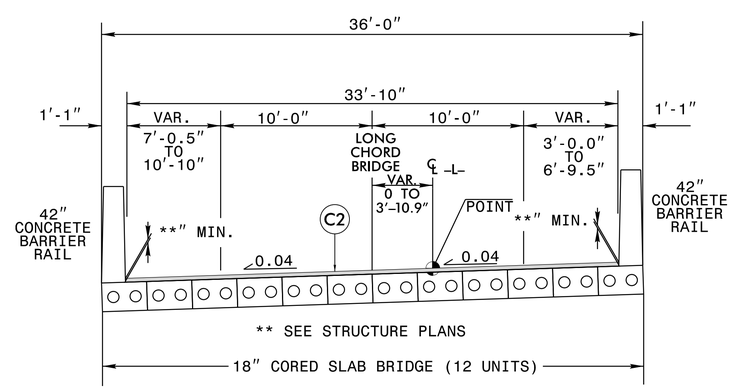

TYPICAL SECTION NO. 3

USE TYPICAL SECTION NO. 3 AS FOLLOWS:
–L– STA. 13+85.25 (BEGIN BRIDGE) TO –L– STA. 14+88.18(END BRIDGE)

SHOULDER DETAIL

–L– STA. 12+90.59 TO –L– STA. 13+82.01 LT.
–L– STA. 14+90.59 TO –L– STA. 15+65.59 LT.
–L– STA. 13+13.18 TO –L– STA. 13+88.18 RT.
–L– STA. 14+85.87 TO –L– STA. 15+60.87 RT.

USE SHOULDER DETAIL IN CONJUNCTION WITH TYPICAL SECTIONS NO. 1 & 2:
** SEE PLANS

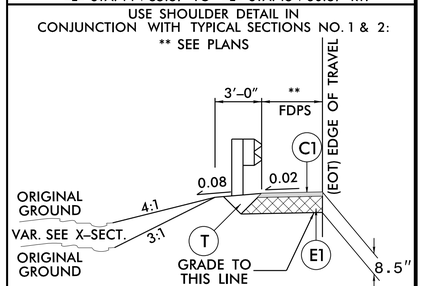

5/30/2017
J:\230196_Rdy_typ.dgn
USERRDOyel

12/06/07

COMPUTED BY: WEI (rea) DATE:
CHECKED BY: DATE:

Earthwork quantities are calculated by the Roadway Design Unit. These earthwork quantities are based in part on subsurface data provided by the Geotechnical Engineering Unit.

STATE OF NORTH CAROLINA
DIVISION OF HIGHWAYS

PROJECT REFERENCE NO.	SHEET NO.
17BP.6.R.69	3

SUMMARY OF EARTHWORK

STATION	STATION	UNCL. EXCAV.	EMBANK. +%	BORROW	WASTE
-L-					
12+31.50	13+86.50	20	107	87	
	BEG. BRIDGE				
	END BRIDGE				
14+86.90	16+42.00	26	204	178	
PROJECT TOTALS:		46	310	264	
GRAND TOTALS:		46	310	264	
SAY:		50		300	

APPROXIMATE QUANTITIES ONLY. UNCLASSIFIED EXCAVATION, BORROW EXCAVATION, SHOULDER BORROW, FINE GRADING, CLEARING AND GRUBBING, ROMOVAL OF EXISTING PAVEMENT WILL BE PAID FOR AT THE LUMP SUM PRICE FOR" GRADING".

PAVEMENT REMOVAL SUMMARY

SURVEY LINE	STATION	STATION	LOCATION LT/RT/CL	YD^2
-L-	13+36.50	14+23.85	CL	113.00
-L-	14+60.36	15+36.90	CL	89.00
			TOTAL:	202.00
			SAY:	210.00

APPROXIMATE QUANTITIES ONLY. UNCLASSIFIED EXCAVATION, BORROW EXCAVATION, SHOULDER BORROW, FINE GRADING, CLEARING AND GRUBBING, ROMOVAL OF EXISTING PAVEMENT WILL BE PAID FOR AT THE LUMP SUM PRICE FOR" GRADING".

SHOULDER BERM GUTTER SUMMARY

SURVEY LINE	STATION	STATION	LENGTH
-L-	15+00.50	15+16.00	15.5
	TOTAL:		15.5
	SAY:		16.0 FT.

LIST OF PIPES, ENDWALLS, ETC. (FOR PIPES 48" & UNDER)

| STATION / SIZE / THICKNESS OR GAUGE | LOCATION (LT,RT, OR CL) | STRUCTURE NO. FROM | STRUCTURE NO. TO | TOP ELEVATION | INVERT ELEVATION | INVERT ELEVATION | SLOPE CRITICAL | DRAINAGE PIPE (RCP, CSP, CAAP, HDPE, or PVC) 12" | 15" | 18" | 24" | 30" | 36" | 42" | 48" | C.S. PIPE (UNLESS NOTED OTHRWISE) 12" | 15" | 18" | 24" | 30" | 36" | 42" | 48" | CLASS III R.C. PIPE (UNLESS OTHERWISE NOTED) 12" | 15" | 18" | 24" | 30" | 36" | 42" | 48" | 15" SIDE DRAIN PIPE | 18" SIDE DRAIN PIPE | 24" SIDE DRAIN PIPE | ENDWALLS STD. 838.01, STD. 838.11 OR STD. 838.80 (UNLESS NOTED OTHERWISE) CU. YDS. R.C.P. | C.S.P. | QUANTITIES FOR DRAINAGE STRUCTURES * TOTAL L.F. FOR PAY QUANTITY SHALL BE COL. "A" + (1.3 X COL."B") LIN. *FT. A PER EACH (0' THRU 5.0') | B 5.0' THRU 10.0' | 10.0' AND ABOVE | C.B. STD. 840.01 OR STD. 840.02 | FRAME, GRATES AND HOOD STANDARD 840.03 TYPE OF GRATE E | F | G | | T.B.D.I. STD. 840.35 | G.D.I. (N.S.) FRAME WITH TWO GRATES STD. 840.29 | G.D.I. TYPE "A" STD. 840.17 OR 840.26 | G.D.I. TYPE "B" STD. 840.18 OR 840.27 | G.D.I. TYPE "D" STD. 840.19 OR 840.28 | G.D.I. FRAME WITH GRATE STD. 840.22 | G.D.I. FRAME WITH TWO GRATES STD. 840.22 | G.D.I. FRAME WITH GRATE STD. 840.24 | G.D.I. (N.S.) FRAME WITH TWO GRATES STD. 840.24 | J.B. STD. 840.31 OR 840.32 | | | | | | | | CORR. STEEL ELBOWS NO. & SIZE | CONC. COLLARS CL. "B" C.Y. STD. 840.72 | CONC. & BRICK PIPE PLUG, C.Y. STD. 840.71 | PIPE REMOVAL LIN.FT. | REMARKS |
|---|---|---|---|---|---

DocuSign Envelope ID: BE6AD64C-5E2B-4550-B3E0-ABF9FCC2AAA9

STATE OF NORTH CAROLINA
DIVISION OF HIGHWAYS

TRANSPORTATION MANAGEMENT PLAN

COLUMBUS COUNTY

17BP.6.R.69

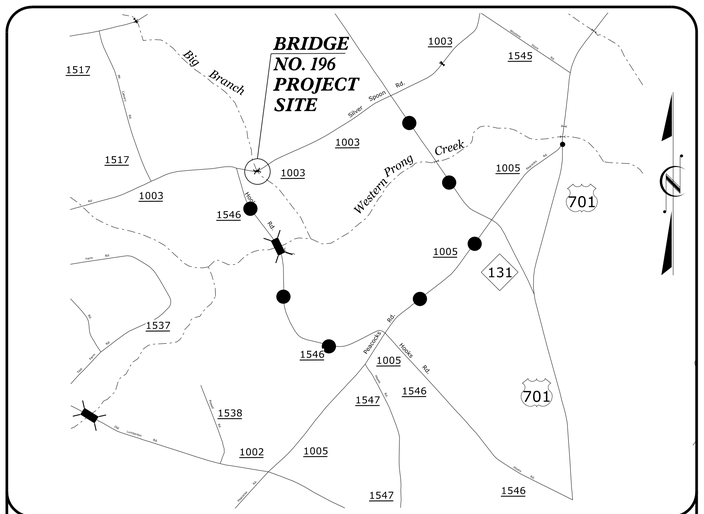

LOCATION MAP

DETOUR ROUTE

LOCATION: REPLACEMENT OF BRIDGE NO. 230196 OVER BIG BRANCH ON SR 1003 (SILVER SPOON ROAD)

TYPE OF WORK: GRADING, DRAINAGE, PAVING AND STRUCTURE

INDEX OF SHEETS

SHEET NO.	TITLE
TMP-1	TITLE SHEET, VICINITY MAP, LEGEND AND INDEX OF SHEETS
TMP-1A	LIST OF APPLICABLE ROADWAY STANDARD DRAWINGS, GENERAL NOTES AND PHASING
TMP-2	SPECIAL SIGN DESIGN(S)
TMP-2A	DETOUR SILVER SPOON RD. (SR 1003)

LEGEND

TRAFFIC CONTROL DEVICES

- BARRICADE (TYPE III)
- CONE
- DRUM — SKINNY DRUM — TUBULAR MARKER
- TEMPORARY CRASH CUSHION
- FLASHING ARROW BOARD
- FLAGGER
- LAW ENFORCEMENT
- TRUCK MOUNTED ATTENUATOR (TMA)
- CHANGEABLE MESSAGE SIGN

TEMPORARY SIGNING

- PORTABLE SIGN
- STATIONARY SIGN
- STATIONARY OR PORTABLE SIGN

SHEET NO.
TMP-1

PROJECT: 17BP.6.R.69

DOCUMENT NOT CONSIDERED FINAL UNLESS ALL SIGNATURES COMPLETED

WORK ZONE SAFETY & MOBILITY
"from the MOUNTAINS to the COAST"

N.C.D.O.T. WORK ZONE TRAFFIC CONTROL
1561 MAIL SERVICE CENTER (MSC) RALEIGH, NC 27699-1561
750 N. GREENFIELD PARKWAY, GARNER, NC 27529 (DELIVERY)
PHONE: (919) 773-2800 FAX: (919) 771-2745

	STATE TRAFFIC MANAGEMENT ENGINEER
J. S. KITE, P.E.	TRAFFIC CONTROL PROJECT ENGINEER
M. SPRINGER, P.E.	TRAFFIC CONTROL PROJECT DESIGN ENGINEER
S. B. JENNINGS	TRAFFIC CONTROL DESIGN ENGINEER

DIVISION OF HIGHWAYS · STATE OF NORTH CAROLINA · DEPARTMENT OF TRANSPORTATION · WORK ZONE TRAFFIC CONTROL

PLAN PREPARED FOR NCDOT BY: WETHERILL ENGINEERING
1203 Jones Franklin Road Raleigh, N.C. 27606 license No. F-0377 Phone: 919 851 1912 Fax: 919 851 8107
TRANSPORTATION PLANNING/DESIGN - BRIDGE/STRUCTURE DESIGN ON/SITE DESIGN - GIS/GPS - CONSTRUCTION OBSERVATION

GREG S. PURVIS, P.E.	PROJECT ENGINEER
JESSE W. GILSTRAP	TRAFFIC CONTROL ENGINEER
SCOTT L. KENNEDY	TRAFFIC CONTROL ENGINEER

APPROVED:
DATE:

SEAL

NORTH CAROLINA PROFESSIONAL ENGINEER SEAL GREG S. PURVIS
DocuSigned by: Greg S. Purvis
D1FDF7C256E34BC...

5/30/2017

5/24/2017
P:\2016\16151.01_COLUMBUS_I96\Traffic\TrafficControl\TCP\230196_TC_TMP_PSH_01.dgn
User:skennedy

DocuSign Envelope ID: BE6AD64C-5E2B-4550-B3E0-ABF9FCC2AAA9

PROJ. REFERENCE NO.	SHEET NO.
17BP.6.R.69	TMP-1A

ROADWAY STANDARD DRAWINGS

THE FOLLOWING ROADWAY STANDARDS AS SHOWN IN "ROADWAY STANDARD DRAWINGS" - PROJECT SERVICES UNIT - N.C. DEPARTMENT OF TRANSPORTATION - RALEIGH, N.C., DATED JANUARY 2012 ARE APPLICABLE TO THIS PROJECT AND BY REFERENCE HEREBY ARE CONSIDERED A PART OF THESE PLANS:

STD. NO.	TITLE
1101.03	TEMPORARY ROAD CLOSURES
1101.04	TEMPORARY SHOULDER CLOSURES
1101.05	WORK ZONE VEHICLE ACCESSES
1101.11	TRAFFIC CONTROL DESIGN TABLES
1110.01	STATIONARY WORK ZONE SIGNS
1145.01	BARRICADES

GENERAL NOTES

CHANGES MAY BE REQUIRED WHEN PHYSICAL DIMENSIONS IN THE DETAIL DRAWINGS, STANDARD DETAILS AND ROADWAY DETAILS ARE NOT ATTAINABLE TO MEET FIELD CONDITIONS, OR RESULT IN DUPLICATE, OR UNDESIRED OVERLAPPING OF DEVICES. MODIFICATION MAY INCLUDE: MOVING, SUPPLEMENTING, COVERING OR REMOVAL OF DEVICES, AS DIRECTED BY THE ENGINEER.

THE FOLLOWING GENERAL NOTES APPLY AT ALL TIMES FOR THE DURATION OF THE CONSTRUCTION PROJECT EXCEPT WHEN OTHERWISE NOTED IN THE PLAN OR DIRECTED BY THE ENGINEER.

TRAFFIC PATTERN ALTERATIONS

A) NOTIFY THE ENGINEER THIRTY (30) CALENDAR DAYS PRIOR TO ANY TRAFFIC PATTERN ALTERATION.

SIGNING

B) PROVIDE SIGNING AND DEVICES REQUIRED TO CLOSE THE ROAD ACCORDING TO THE ROADWAY STANDARD DRAWINGS AND TRAFFIC CONTROL PLANS.

PROVIDE SIGNING REQUIRED FOR THE OFF-SITE DETOUR ROUTE AS SHOWN IN THE TRAFFIC CONTROL PLANS.

C) COVER OR REMOVE ALL SIGNS AND DEVICES REQUIRED TO CLOSE THE ROAD WHEN ROAD CLOSURE IS NOT IN OPERATION.

COVER OR REMOVE ALL SIGNS REQUIRED FOR THE OFF-SITE DETOUR WHEN THE DETOUR IS NOT IN OPERATION.

D) ENSURE ALL NECESSARY SIGNING IS IN PLACE PRIOR TO ALTERING ANY TRAFFIC PATTERN.

TRAFFIC CONTROL DEVICES

E) PLACE TYPE III BARRICADES WITH "ROAD CLOSED" SIGN R11-2 ATTACHED OF SUFFICIENT LENGTH TO CLOSE ENTIRE ROADWAY.

PHASING

NOTE: CONSTRUCT BRIDGE NO.230198 BEFORE BRIDGE NO. 230196.

PHASE I

STEP 1: - USING ROADWAY STANDARD DRAWING NO. 1101.03, SHEET 1 OF 9, AND SHEET TMP-2B CLOSE SILVER SPOON ROAD (SR 1003) TO TRAFFIC.

STEP 2: - REMOVE EXISTING BRIDGE AND CONSTRUCT PROPOSED BRIDGE & APPROACHES, UP TO & INCLUDING THE FINAL LAYER OF SURFACE COURSE, AND PLACE FINAL PAVEMENT MARKINGS (SEE ROADWAY PLANS AND FINAL PAVEMENT MARKING PLANS).

STEP 3: - OPEN SILVER SPOON ROAD (SR 1003) TO THE FINAL TRAFFIC PATTERN AND REMOVE ALL TRAFFIC CONTROL DEVICES FROM THE PROJECT.

DOCUMENT NOT CONSIDERED FINAL UNLESS ALL SIGNATURES COMPLETED

WETHERILL ENGINEERING
1223 Jones Franklin Rd.
Raleigh, N.C. 27606
Liscense No. F-0377
Bus: 919 851 8077
Fax: 919 851 8107
TRANSPORTATION PLANNING/DESIGN - BRIDGE/STRUCTURE DESIGN
CIVIL/SITE DESIGN - GIS/GPS - CONSTRUCTION OBSERVATION

APPROVED:_____ DATE:_____

SEAL

NORTH CAROLINA PROFESSIONAL ENGINEER SEAL GREG S. PURVIS

DocuSigned by: Greg S. Purvis D1F0F7C256E3456...

5/30/2017

DIVISION OF HIGHWAYS STATE OF NORTH CAROLINA DEPARTMENT OF TRANSPORTATION WORK ZONE TRAFFIC CONTROL

ROADWAY STANDARD DRAWINGS, LEGEND, GENERAL NOTES AND PHASING

5/24/2017
P:\2016\16150_COLUMBUS_I96\Traffic\TrafficControl\TCP\230196_TC_TMP_PSH_01A.dgn
User:skennedy

DocuSign Envelope ID: BE6AD64C-5E2B-4550-B3E0-ABF9FCC2AAA9

PROJ. REFERENCE NO.	SHEET NO.
17BP.6.R.69	TMP-2

SIGN NUMBER: name
TYPE: STATIONARY
QUANTITY: SEE PLANS

SIGN WIDTH: 4′-0″
HEIGHT: 2′-0″
TOTAL AREA: 8.0 Sq.Ft.

BORDER TYPE: INSET
RECESS: 0.38″
WIDTH: 0.5″
RADII: 1.5″

NO. Z BARS:
LENGTH:

BACKG COLOR: Fluorescent Orange
COPY COLOR: Black

SYMBOL	X	Y	WID	HT

MAT′L: 0.080″ (2.0 mm) ALUMINUM

USE NOTES: 1,2

1. Legend and border shall be direct applied black non-reflective sheeting.
2. Background shall be NC GRADE B fluorescent orange retroreflective sheeting.

DESIGN BY: SLK
CHECKED BY: JWG
Sep 26, 2016
PROJECT ID: 17BP.6.R.69
DIV: 6

Spacing Factor is 1 unless specified otherwise

LETTER POSITIONS

Letter spacings are to start of next letter

																											Series/Size Text Length
		S	i	l	v	e	r		S	p	o	o	n														D 2000
	4	4.2	1.8	1.4	3.9	3.7	1.9	5	4.1	3.6	3.6	3.9	3	4													40.1
		R	o	a	d																						D 2000
	16.9	4	3.6	3.6	3	16.9																					14.2

FILENAME: Guidesign6_091316

NORTH CAROLINA D.O.T. SIGN DETAIL

DOCUMENT NOT CONSIDERED FINAL UNLESS ALL SIGNATURES COMPLETED

WETHERILL ENGINEERING
1223 Jones Franklin Rd.
Raleigh, N.C. 27606
Liscense No. F-0377
Bus: 919 851 8077
Fax: 919 851 8107
TRANSPORTATION PLANNING/DESIGN - BRIDGE/STRUCTURE DESIGN
CIVIL/SITE DESIGN - GIS/GPS - CONSTRUCTION OBSERVATION

APPROVED: _____ DATE: _____

SEAL

NORTH CAROLINA PROFESSIONAL ENGINEER SEAL 019587 GREG S. PURVIS

Greg S. Purvis
5/30/2017

DIVISION OF HIGHWAYS
STATE OF NORTH CAROLINA
DEPARTMENT OF TRANSPORTATION
WORK ZONE TRAFFIC CONTROL

SPECIAL
SIGN
DESIGN(S)

5/24/2017
P:\2016\16150_COLUMBUS_I96\Traffic\TrafficControl\TCP\230196_TC_TMP_PSH_02.dgn
User:skennedy

DocuSign Envelope ID: BE6AD64C-5E2B-4550-B3E0-ABF9FCC2AAA9

PROJ. REFERENCE NO.	SHEET NO.
17BP.6.R.69	TMP-2A

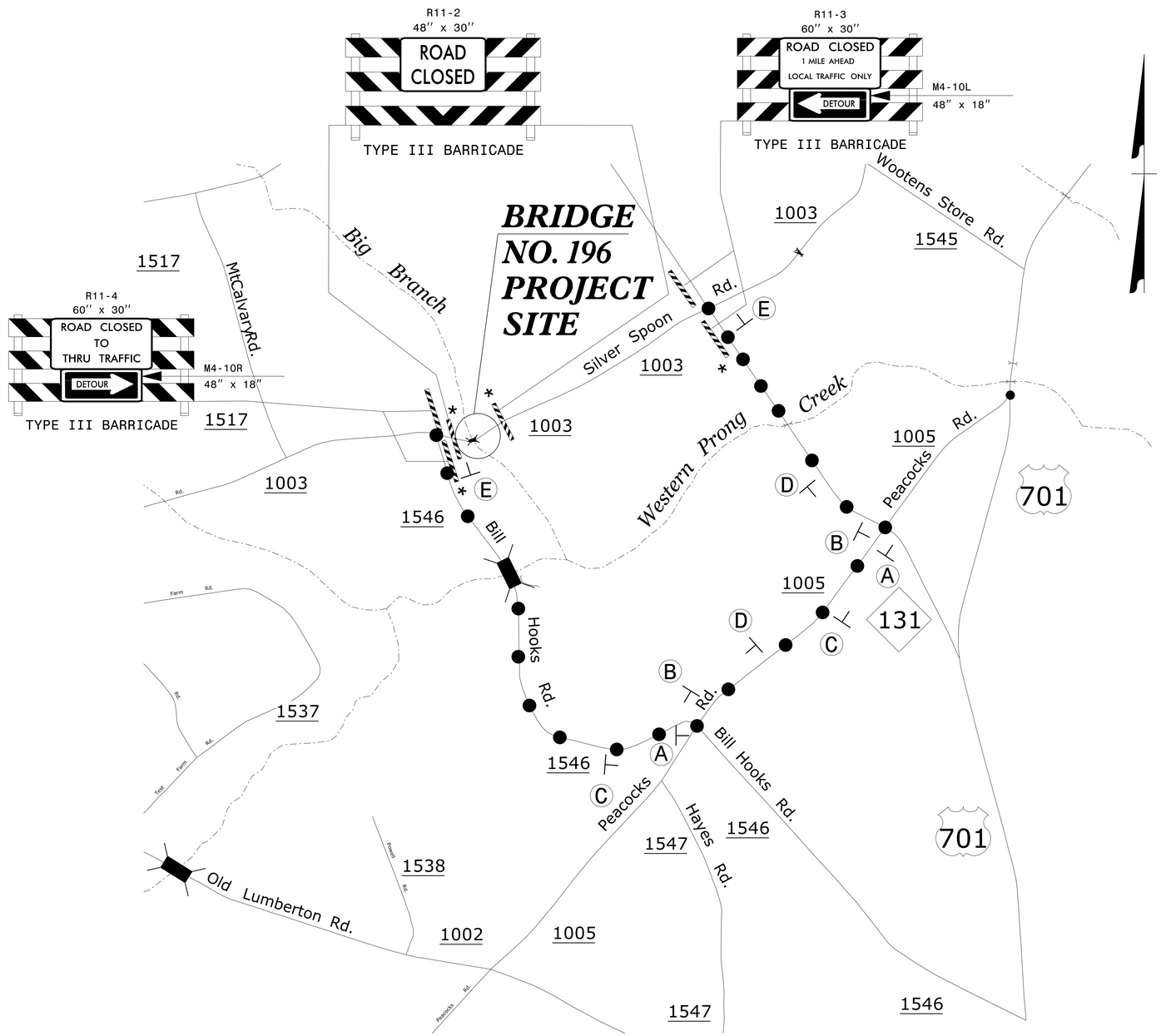

DETOUR SIGNING

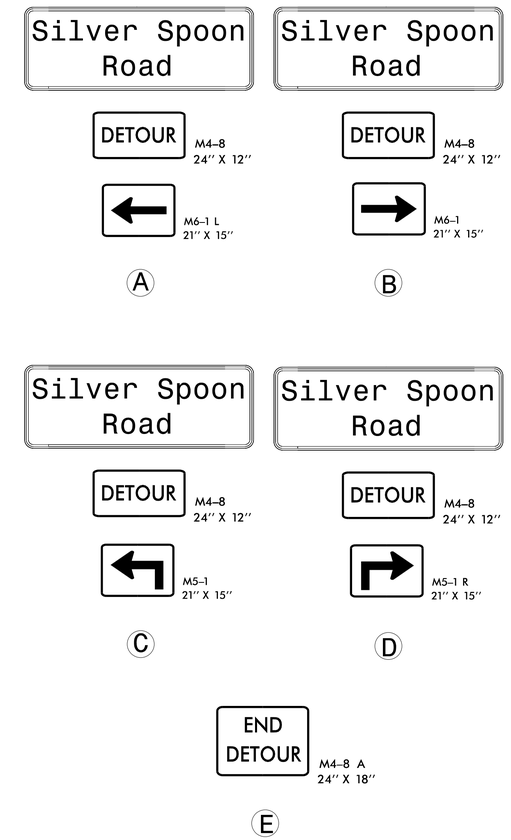

NOTES: SEE TMP-2 FOR "SIVER SPOON ROAD" SPECIAL SIGN DESIGN.
ALL DETOUR SIGN LOCATIONS ARE APPROXIMATE.
* SEE RSD 1101.03, SHEET 1 OF 9, FOR TYPE III BARRICADE LOCATION WITH ATTACHED SIGNING & ADDITIONAL SIGNING FOR ROAD CLOSURE.

DETOUR ROUTE

DOCUMENT NOT CONSIDERED FINAL UNLESS ALL SIGNATURES COMPLETED

WETHERILL ENGINEERING
1223 Jones Franklin Rd.
Raleigh, N.C. 27606
Liscense No. F-0377
Bus: 919 851 8077
Fax: 919 851 8107
TRANSPORTATION PLANNING/DESIGN - BRIDGE/STRUCTURE DESIGN
CIVIL/SITE DESIGN - GIS/GPS - CONSTRUCTION OBSERVATION

APPROVED: DATE:

SEAL
NORTH CAROLINA PROFESSIONAL ENGINEER GREG S. PURVIS
DocuSigned by: Greg S. Purvis
5/30/2017

DIVISION OF HIGHWAYS
STATE OF NORTH CAROLINA
DEPARTMENT OF TRANSPORTATION
WORK ZONE TRAFFIC CONTROL

DETOUR SILVER SPOON ROAD (SR 1003)

5/24/2017
P:\2016\16151_01_COLUMBUS_I96\Traffic\TrafficControl\TCP\230196_TC_TMP_PSH_02A.dgn
User:skennedy

DocuSign Envelope ID: BE6AD64C-5E2B-4550-B3E0-ABF9FCC2AAA9

BRIDGE NO. 230196	PROJECT REFERENCE NO.	SHEET NO.
FINAL PLANS	17BP.6.R.69	4
	R/W SHEET NO.	

ROADWAY DESIGN ENGINEER — NORTH CAROLINA PROFESSIONAL ENGINEER SEAL 026905 GREGORY S. PARKS — 5/30/2017

HYDRAULICS ENGINEER — NORTH CAROLINA PROFESSIONAL ENGINEER SEAL 026903 MAX S. PRICE — 5/30/2017

WETHERILL ENGINEERING
1223 Jones Franklin Rd.
Raleigh, N.C. 27606
Liscense No. F-0377
Bus: 919 851 8077
Fax: 919 851 8107
TRANSPORTATION PLANNING/DESIGN - BRIDGE/STRUCTURE DESIGN
CIVIL/SITE DESIGN - GIS/GPS - CONSTRUCTION OBSERVATION

DOCUMENT NOT CONSIDERED FINAL UNLESS ALL SIGNATURES COMPLETED

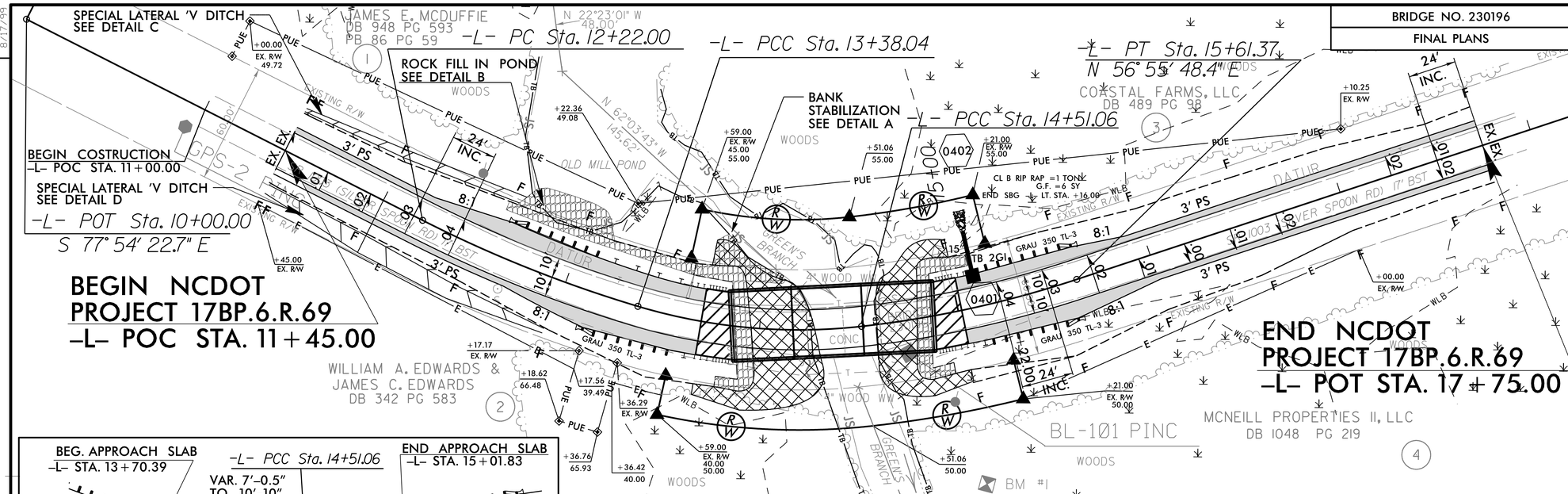

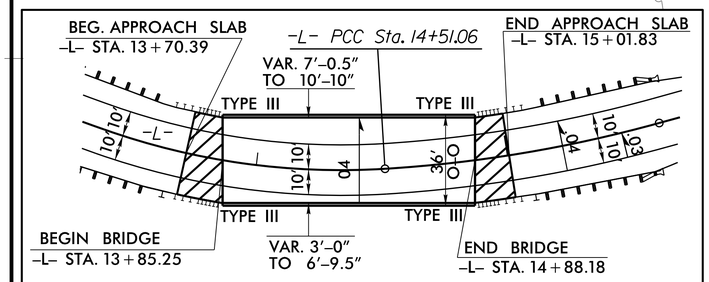

SKETCH SHOWING BRIDGE/PAVEMENT RELATIONSHIP

-L-

PI Sta 12+80.18	PI Sta 13+95.32	PI Sta 15+06.41
Δ = 10° 17' 55.2" (LT)	Δ = 22° 57' 04.9" (LT)	Δ = 11° 54' 48.8" (LT)
D = 8° 52' 30.4"	D = 20° 18' 28.0"	D = 10° 48' 01.9"
L = 116.04'	L = 113.02'	L = 110.31'
T = 58.18'	T = 57.28'	T = 55.35'
R = 645.58'	R = 282.14'	R = 530.49'
SE = EXIST.	SE = .04	SE = .04
	DS = 30 mph	DS = 40 mph

BM #1 ELEVATION = 74.86
N 247237 E 2070043
BL STATION 13+24.00 74 RIGHT
BENCH TIE NAIL SET IN 12" MAPLE

DESIGN EXCEPTION NEEDED: HORIZONTAL CURVE RADIUS & STOPING SIGHT DISTANCE

SEE SHEET 2A-1 FOR DRAINAGE DETAILS

SEE SHEETS S-1 THRU S-23 FOR STRUCTURE PLANS

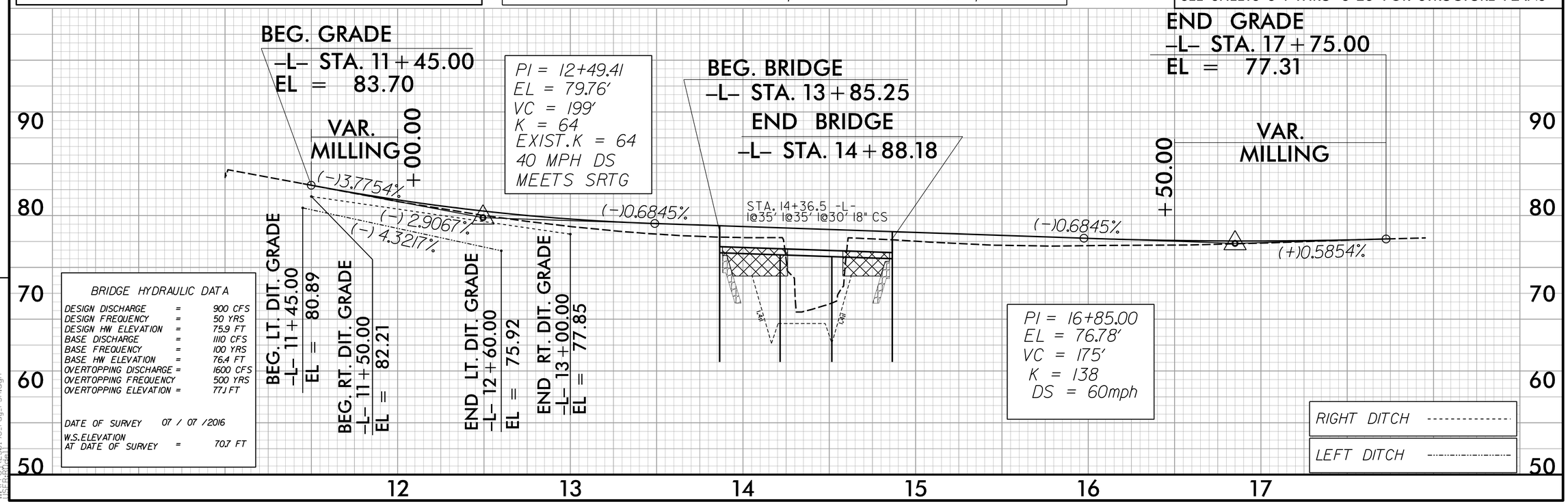

BRIDGE HYDRAULIC DATA

DESIGN DISCHARGE	=	900 CFS
DESIGN FREQUENCY	=	50 YRS
DESIGN HW ELEVATION	=	75.9 FT
BASE DISCHARGE	=	1110 CFS
BASE FREQUENCY	=	100 YRS
BASE HW ELEVATION	=	76.4 FT
OVERTOPPING DISCHARGE	=	1600 CFS
OVERTOPPING FREQUENCY		500 YRS
OVERTOPPING ELEVATION	=	77.1 FT
DATE OF SURVEY		07 / 07 /2016
W.S.ELEVATION AT DATE OF SURVEY	=	70.7 FT

REVISIONS

8/17/99

5/30/2017 17BP.6.R.69_230196_rdy_PSH.dgn USER:Rodell

DocuSign Envelope ID: BE6AD64C-5E2B-4550-B3E0-ABF9FCC2AAA9

17BP.6.R.69

STATE OF NORTH CAROLINA
DEPARTMENT OF TRANSPORTATION

PAVEMENT MARKING PLAN
COLUMBUS COUNTY

LOCATION: REPLACEMENT OF BRIDGE NO. 230196 OVER BIG BRANCH ON SR 1003 (SILVER SPOON ROAD)

TIP NO.	SHEET NO.
17BP.6.R.69	PMP-1

APPROVED:

DATE:

SEAL

NORTH CAROLINA PROFESSIONAL ENGINEER SEAL 022903 GREG S. PURVIS

DocuSigned by: Greg S. Purvis D1F0F7C256E340...

5/30/2017

DOCUMENT NOT CONSIDERED FINAL UNLESS ALL SIGNATURES COMPLETED

PLAN PREPARED FOR NCDOT BY:

WETHERILL ENGINEERING
1223 Jones Franklin Road
Raleigh, N.C. 27606
(919) 851-1912
License: F-0991
Fax: 919 851-8077
Fax: 919 851-8127

TRANSPORTATION PLANNING/DESIGN - BRIDGE/STRUCTURE DESIGN
CMS/GPS DESIGN - GIS/GPS - CONSTRUCTION OBSERVATION

GREG S. PURVIS, P.E. — PROJECT ENGINEER

JESSE W. GILSTRAP — TRAFFIC CONTROL ENGINEER

SCOTT L. KENNEDY — TRAFFIC CONTROL ENGINEER

ROADWAY STANDARD DRAWING

THE FOLLOWING ROADWAY STANDARDS AS APPEAR IN "ROADWAY STANDARD DRAWINGS" - PROJECT SERVICES UNIT - N.C. DEPARTMENT OF TRANSPORTATION - RALEIGH, N.C., DATED JANUARY 2012 ARE APPLICABLE TO THIS PROJECT AND BY REFERENCE HEREBY ARE CONSIDERED A PART OF THESE PLANS:

STD. NO.	TITLE
1205.01	PAVEMENT MARKINGS - LINE TYPES AND OFFSETS
1205.02	PAVEMENT MARKINGS - TWO-LANE AND MULTILANE ROADWAYS
1205.12	PAVEMENT MARKINGS - BRIDGES
1250.01	RAISED PAVEMENT MARKERS - INSTALLATION SPACING
1251.01	RAISED PAVEMENT MARKERS - PERMANENT AND TEMPORARY
1261.01	GUARDRAIL AND BARRIER DELINEATORS - INSTALLATION SPACING
1261.02	GUARDRAIL AND BARRIER DELINEATORS - TYPES AND MOUNTING
1262.01	GUARDRAIL END DELINEATION

INDEX

SHEET NO.	DESCRIPTION
PMP-1	PAVEMENT MARKING PLAN TITLE
PMP-2	PAVEMENT MARKING DETAIL (SR 1003) BRIDGE NO. 230196

GENERAL NOTES

THE FOLLOWING GENERAL NOTES APPLY AT ALL TIMES FOR THE DURATION OF THE CONSTRUCTION PROJECT, EXCEPT WHEN OTHERWISE NOTED IN THE PLAN, OR DIRECTED BY THE ENGINEER.

A) INSTALL PAVEMENT MARKINGS AND PAVEMENT MARKERS ON THE FINAL SURFACE AS FOLLOWS:

ROAD NAME	MARKING	MARKER
BRIDGE NO. 230196		
SR 1003 (SILVER SPOON RD.)	PAINT	PERMANENT RAISED
BRIDGE, SR 1003 (SILVER SPOON RD.)	PAINT	PERMANENT RAISED

B) PLACE TWO APPLICATIONS OF PAINT PAVEMENT MARKINGS ON THE FINAL WEARING SURFACE. PLACE THE SECOND APPLICATION OF PAINT UPON SUFFICIENT DRYING TIME OF THE FIRST.

C) TIE PROPOSED PAVEMENT MARKING LINES TO EXISTING PAVEMENT MARKING LINES.

D) REMOVE/REPLACE ANY CONFLICTING/DAMAGED PAVEMENT MARKINGS AND MARKERS.

E) PASSING ZONES WILL BE DETERMINED IN THE FIELD AND MUST BE APPROVED BY THE ENGINEER.

PLAN PREPARED BY: N.C.D.O.T. SIGNING AND DELINEATION UNIT

A.I. ALQUDWAH, PE — SIGNING & DELINEATION REGIONAL ENGINEER

MITCH EATON — SIGNING & DELINEATION PROJECT DESIGN ENGINEER/TECHNICIAN

STATE OF NORTH CAROLINA DEPARTMENT OF TRANSPORTATION

5/24/2017
P:\2016\1615.01_COLUMBUS_196\Traffic\TrafficControl\TCP\230196_TC_PMP_PSH_01.dgn
User:kerrmedg

DocuSign Envelope ID: BE6AD64C-5E2B-4550-B3E0-ABF9FCC2AAA9

PROJ. REFERENCE NO.	SHEET NO.
17BP.6.R.69	PMP-2

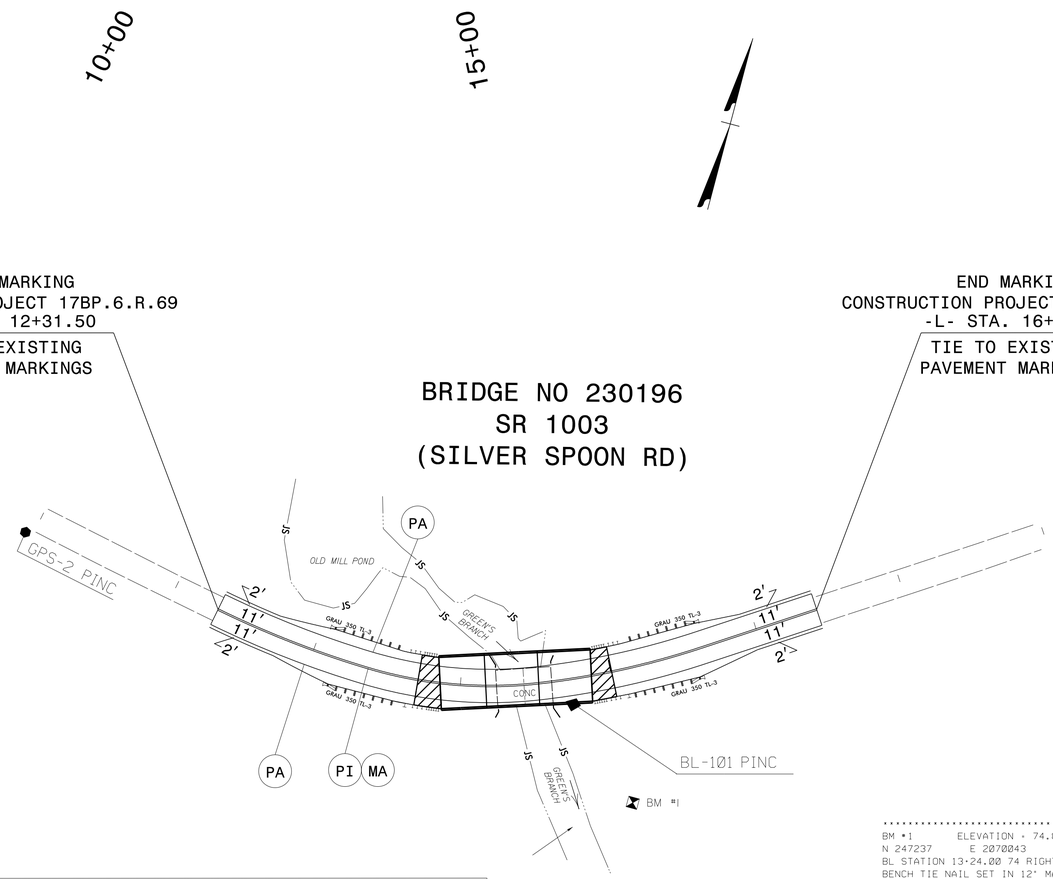

BM #1 ELEVATION = 74.86
N 247237 E 2070043
BL STATION 13+24.00 74 RIGHT
BENCH TIE NAIL SET IN 12" MAPLE

PAVEMENT MARKING SCHEDULE

SYBOL	DESCRIPTION	PAY ITEM
		FINAL PAVEMENT MARKINGS
		PAINT (4")
PA	WHITE EDGELINE	
PI	YELLOW DOUBLE CENTER	
		MARKERS
MA	YELLOW/YELLOW	

DOCUMENT NOT CONSIDERED FINAL
UNLESS ALL SIGNATURES COMPLETED

WETHERILL ENGINEERING
1223 Jones Franklin Rd.
Raleigh, N.C. 27606
Liscense No. F-0377
Bus: 919 851 8077
Fax: 919 851 8107
TRANSPORTATION PLANNING/DESIGN - BRIDGE/STRUCTURE DESIGN
CIVIL/SITE DESIGN - GIS/GPS - CONSTRUCTION OBSERVATION

APPROVED:
DATE:
SEAL
5/30/2017
NORTH CAROLINA PROFESSIONAL ENGINEER SEAL GREG S. PURVIS
DocuSigned by: Greg S. Purvis D1F0F7C256E24D3...

DIVISION OF HIGHWAYS
STATE OF NORTH CAROLINA
DEPARTMENT OF TRANSPORTATION
WORK ZONE TRAFFIC CONTROL

FINAL PAVEMENT MARKING PLAN AND SCHEDULE

5/24/2017
P:\2016\16151.01_COLUMBUS_I96\Traffic\TrafficControl\TCP\230196_TC_PMP_PSH_02.dgn
User:skennedy

TIP PROJECT: 17BP.6.R.69

STATE	STATE PROJECT REFERENCE NO.	SHEET NO.	TOTAL SHEETS
N.C.	SF-230196	EC-1	

STATE PROJ. NO.	F. A. PROJ. NO.	DESCRIPTION

STATE OF NORTH CAROLINA
DIVISION OF HIGHWAYS

PLAN FOR PROPOSED
HIGHWAY EROSION CONTROL

COLUMBUS COUNTY

LOCATION: BRIDGE NO. 230196 OVER BIG BRANCH ON SR 1003 (SILVER SPOON RD.)

TYPE OF WORK: GRADING, DRAINAGE, PAVING & STRUCTURE

See Sheet 1A For Index of Sheets
See Sheet 1B For Conventional Symbols
See Sheet 1C For Survey Control Sheet

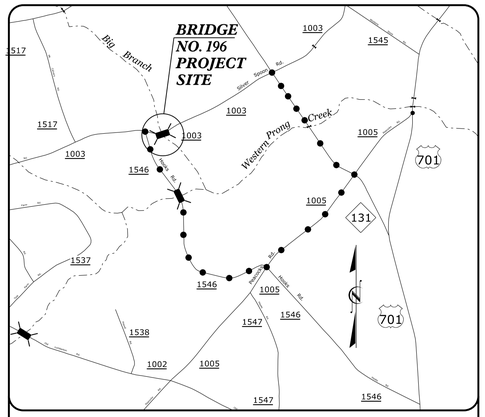

VICINITY MAP

OFF-SITE DETOUR

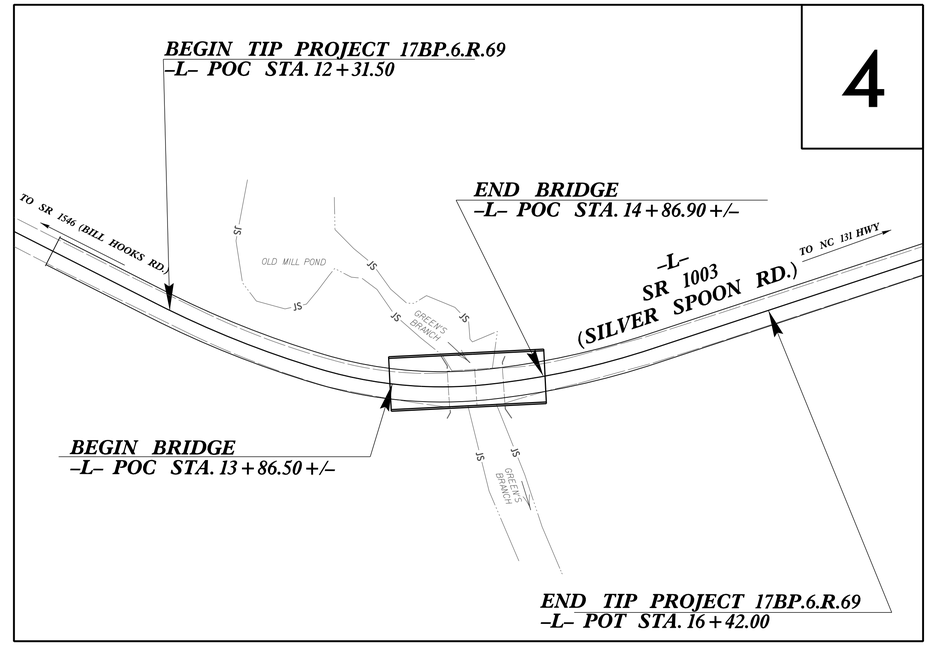

NAD 83/NA 2001

EROSION AND SEDIMENT CONTROL MEASURES

Std. #	Description	Symbol
1630.03	Temporary Silt Ditch	TSD
1630.05	Temporary Diversion	TD
1605.01	Temporary Silt Fence	
1606.01	Special Sediment Control Fence	
1622.01	Temporary Berms and Slope Drains	
1630.02	Silt Basin Type B	
1633.01	Temporary Rock Silt Check Type-A	
	Temporary Rock Silt Check Type-A with Matting and Polyacrylamide (PAM)	
1633.02	Temporary Rock Silt Check Type-B	
	Wattle/ Coir Fiber Wattle	EW CFW
	Wattle/ Coir Fiber Wattle with Polyacrylamide (PAM)	
1634.01	Temporary Rock Sediment Dam Type-A	
1634.02	Temporary Rock Sediment Dam Type-B	
1635.01	Rock Pipe Inlet Sediment Trap Type-A	
1635.02	Rock Pipe Inlet Sediment Trap Type-B	
1630.04	Stilling Basin	
1630.06	Special Stilling Basin	
	Rock Inlet Sediment Trap:	
1632.01	Type A	A
1632.02	Type B	B
1632.03	Type C	C
	Skimmer Basin	
	Tiered Skimmer Basin	
	Infiltration Basin	

THIS PROJECT CONTAINS EROSION CONTROL PLANS FOR CLEARING AND GRUBBING PHASE OF CONSTRUCTION.

CLEARING ON THIS PROJECT SHALL BE PERFORMED TO THE LIMITS ESTABLISHED BY METHOD II.

THIS PROJECT IS NOT WITHIN ANY MUNICIPAL BOUNDARIES.

GRAPHIC SCALE

0
PLANS

0
PROFILE (HORIZONTAL)

0
PROFILE (VERTICAL)

THESE EROSION AND SEDIMENT CONTROL PLANS COMPLY WITH THE REGULATIONS SET FORTH BY THE NCG-010000 GENERAL CONSTRUCTION PERMIT EFFECTIVE AUGUST 3, 2011 AND ISSUED BY THE NORTH CAROLINA DEPARTMENT OF ENVIRONMENT AND NATURAL RESOURCES DIVISION OF WATER RESOURCES.

Prepared in the Office of:

WETHERILL ENGINEERING
1223 JONES FRANKLIN ROAD
RALEIGH, NC 27606

Designed by:

HARMINDER SINGH — NAME
3519 — LEVEL III CERTIFICATION NO.

Reviewed in the Office of:

ROADSIDE ENVIRONMENTAL UNIT
1 South Wilmington St.
Raleigh, NC 27611

2012 STANDARD SPECIFICATIONS

Reviewed by:

Roadway Standard Drawings

The following roadway english standards as appear in "Roadway Standard Drawings"– Roadway Design Unit – N. C. Department of Transportation – Raleigh, N. C., dated January 2012 and the latest revison thereto are applicable to this project and by reference hereby are considered a part of these plans.

1604.01	Railroad Erosion Control Detail	1632.01	Rock Inlet Sediment Trap Type A
1605.01	Temporary Silt Fence	1632.02	Rock Inlet Sediment Trap Type B
1606.01	Special Sediment Control Fenee	1632.03	Rock Inlet Sediment Trap Type C
1607.01	Gravel Construction Entrance	1633.01	Temporary Rock Silt Cheek Type A
1622.01	Temporary Berms and Slope Drains	1633.02	Temporary Rock Silt Cheek Type B
1630.01	Riser Basin	1634.01	Temporary Rock Sediment Dam Type A
1630.02	Silt Basin Type B	1634.02	Temporary Rock Sediment Dam Type B
1630.03	Temporary Silt Ditch	1635.01	Rock Pipe Inlet Sediment Trap Type A
1630.04	Stilling Basin	1635.02	Rock Pipe Inlet Sediment Trap Type B
1630.05	Temporary Diversion	1640.01	Coir Fiber Baffle
1630.06	Special Stilling Basin	1645.01	Temporary Stream Crossing
1631.01	Matting Installation		

5/30/2017 08:18:58 AM
LUMBUS_196\Erosion Control\230196_hyd_EC_tsh.dgn

PROJECT REFERENCE NO.	SHEET NO.
SF-230196	EC-2

DIVISION OF HIGHWAYS
STATE OF NORTH CAROLINA

SOIL STABILIZATION TIMEFRAMES

SITE DESCRIPTION	STABILIZATION TIME	TIMEFRAME EXCEPTIONS
PERIMETER DIKES, SWALES, DITCHES AND SLOPES	7 DAYS	NONE
HIGH QUALITY WATER (HQW) ZONES	7 DAYS	NONE
SLOPES STEEPER THAN 3:1	7 DAYS	IF SLOPES ARE 10' OR LESS IN LENGTH AND ARE NOT STEEPER THAN 2:1, 14 DAYS ARE ALLOWED.
SLOPES 3:1 OR FLATTER	14 DAYS	7 DAYS FOR SLOPES GREATER THAN 50' IN LENGTH.
ALL OTHER AREAS WITH SLOPES FLATTER THAN 4:1	14 DAYS	NONE, EXCEPT FOR PERIMETERS AND HQW ZONES.

PROJECT REFERENCE NO.	SHEET NO.
SF-230196	EC-04/CONST.04
R/W SHEET NO.	
ROADWAY DESIGN ENGINEER	HYDRAULICS ENGINEER

CLEARING AND GRUBBING
EROSION CONTROL FOR
CONSTRUCTION SHEET 04

NOTE:
PERIMETER EROSION CONTROL MEASURES SHALL BE INSTALLED DURING CLEARING AND GRUBBING PHASE.

NOTE:
ORANGE SAFETY FENCE SHALL BE INSTALLED AT THE LIMITS OF THE PERMITTED WETLAND IMPACTS BOUNDARY.

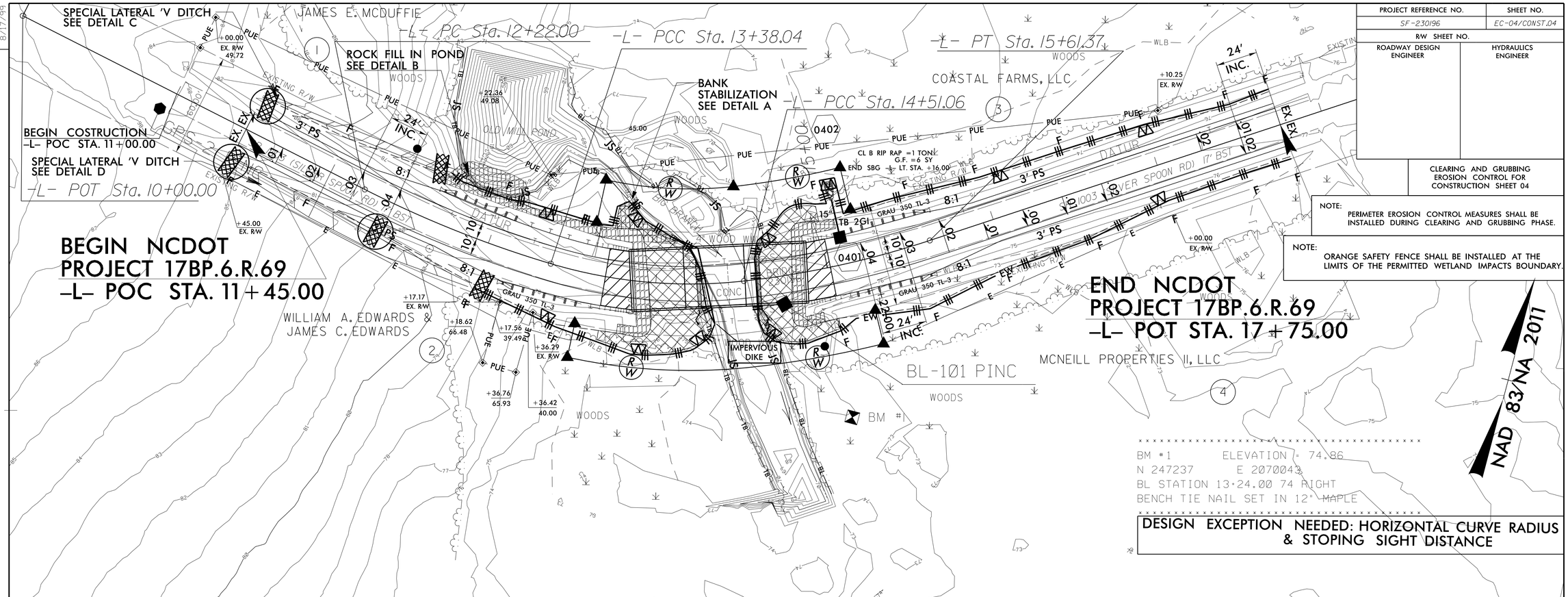

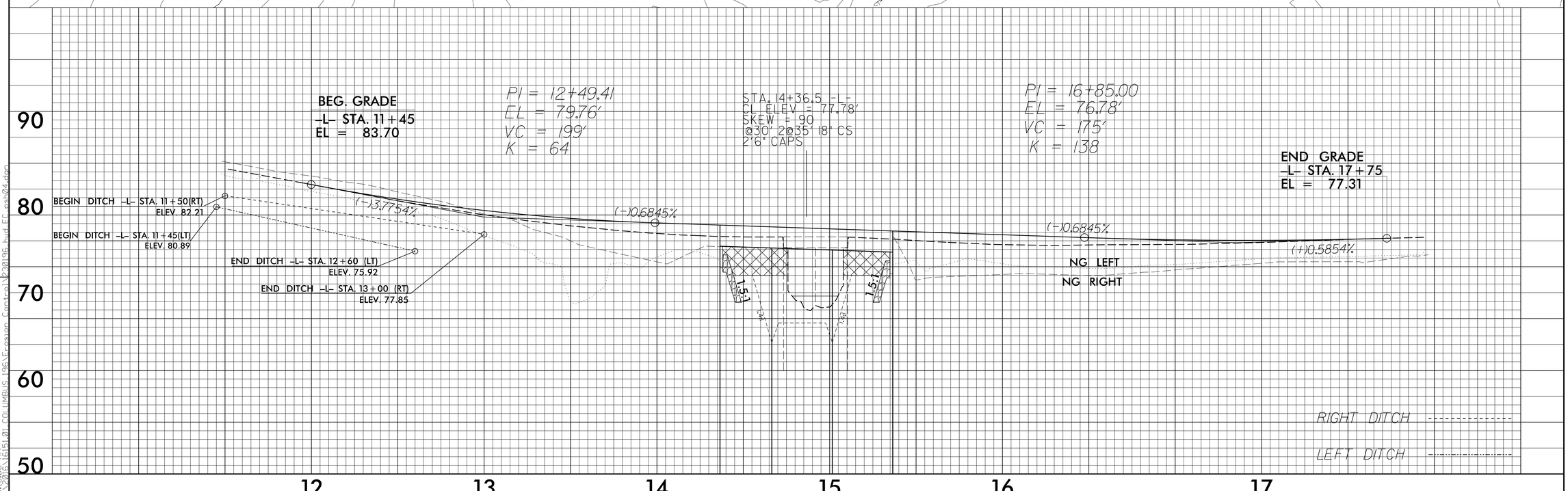

REVISIONS

8/17/99

5/30/2017
PM
PW:2016_16\16101.01_COLUMBUS_196\Erosion_Control\230196_hyd_EC_cst04.dgn

PROJECT REFERENCE NO.	SHEET NO.
SF-230196	EC-05/CONST.05
R/W SHEET NO.	
ROADWAY DESIGN ENGINEER	HYDRAULICS ENGINEER

Place Matting for Erosion Control on Slopes Adjacent to Permitted Wetlands as Work Allows.

NOTE: ORANGE SAFETY FENCE SHALL BE INSTALLED AT THE LIMITS OF THE PERMITTED WETLAND IMPACTS BOUNDARY.

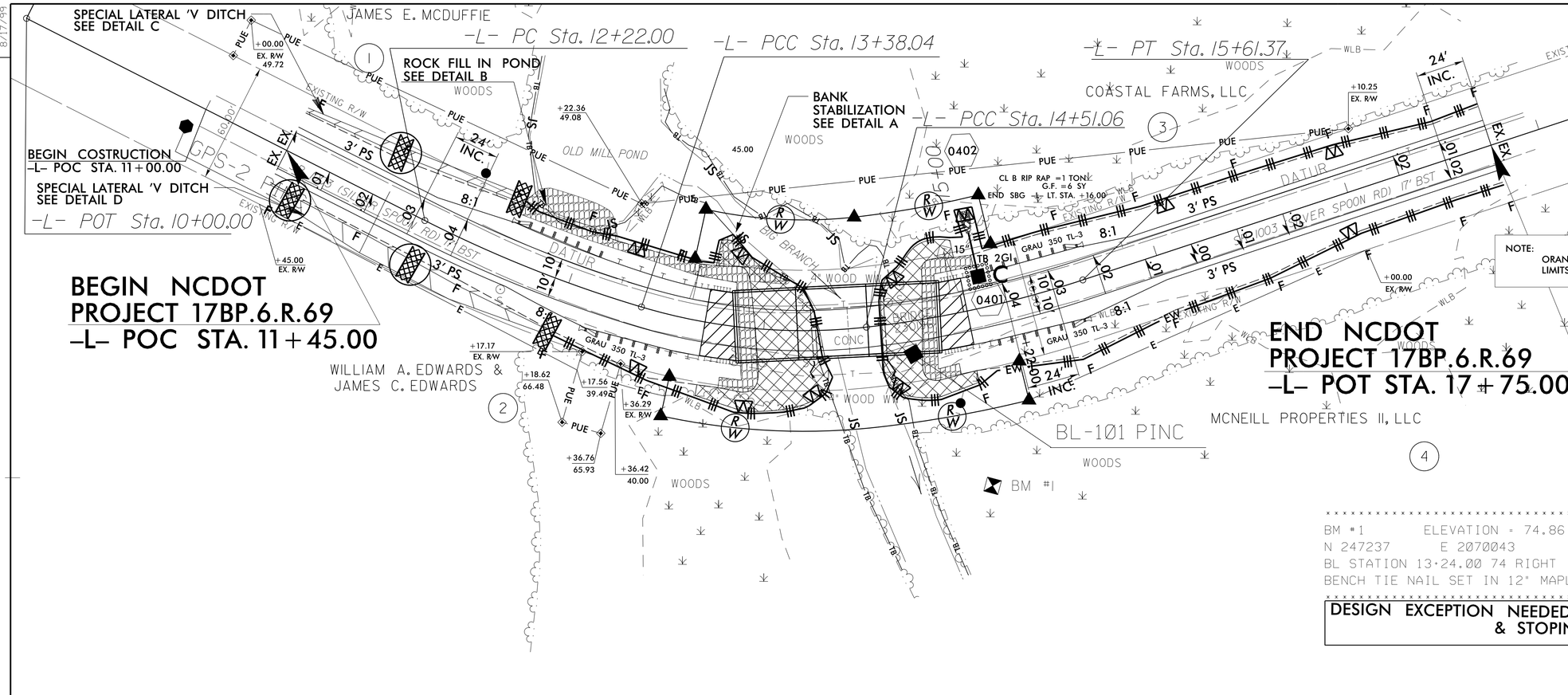

BM #1 ELEVATION = 74.86
N 247237 E 2070043
BL STATION 13+24.00 74 RIGHT
BENCH TIE NAIL SET IN 12" MAPLE

DESIGN EXCEPTION NEEDED: HORIZONTAL CURVE RADIUS & STOPING SIGHT DISTANCE

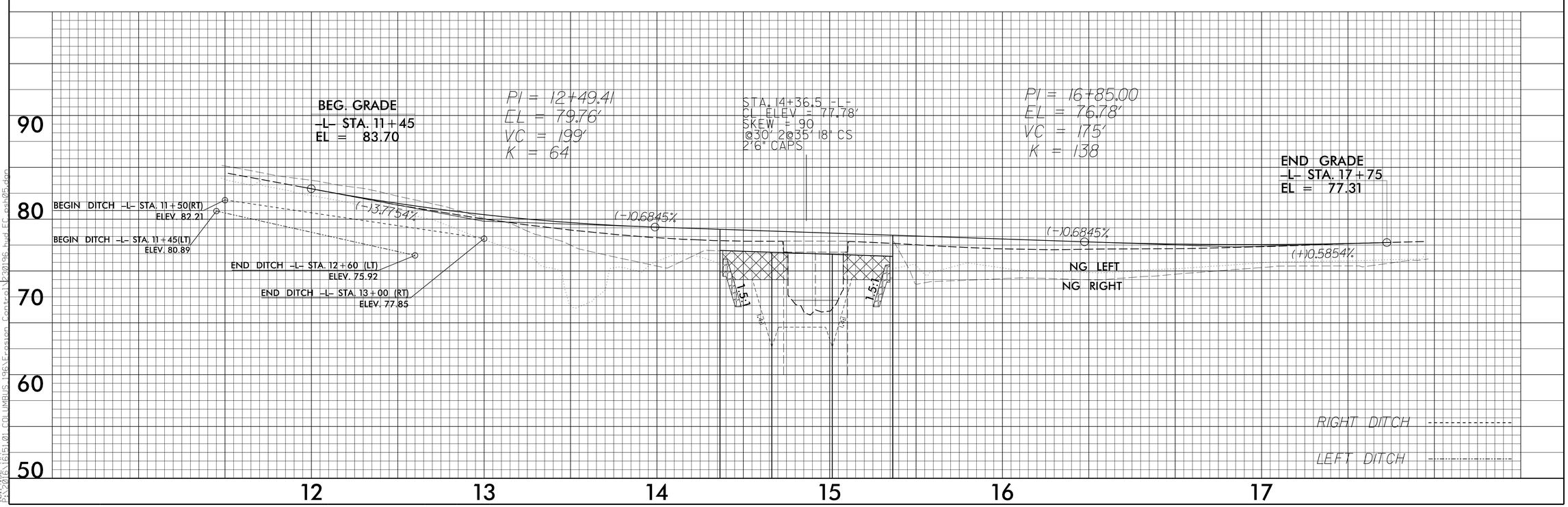

REVISIONS

8/17/99

5/30/2017 10:39:52 AM
PRX-2016-16161.01 COLUMBUS 196\Erosion Control\230196_bud_EC_psh05.dgn

STATE	STATE PROJECT REFERENCE NO.	SHEET NO.	TOTAL SHEETS
N.C.	SF-230196	EC-6	

TEMPORARY ROCK SILT CHECK TYPE 'A' WITH EXCELSIOR MATTING AND POLYACRYLAMIDE (PAM) DETAIL

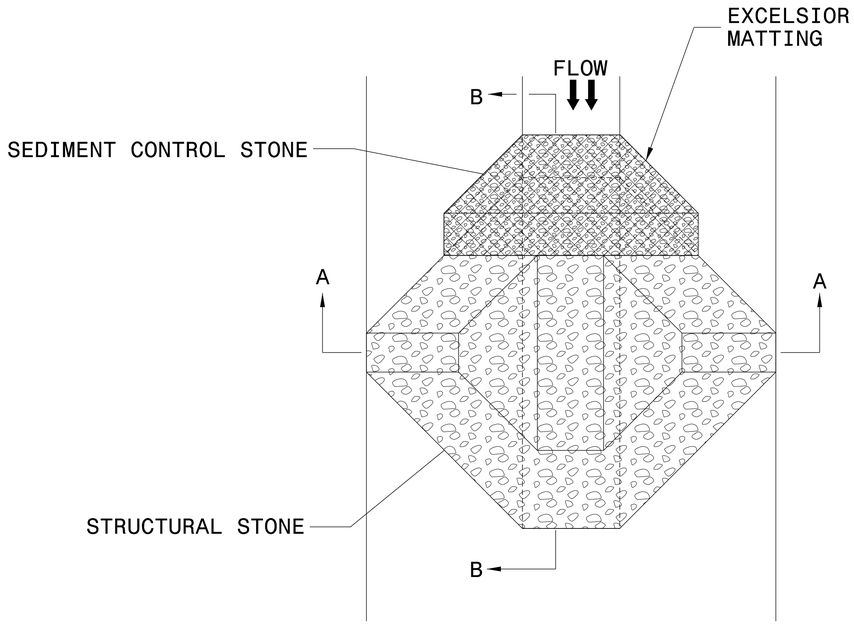

PLAN

NOTES:

INSTALL TEMPORARY ROCK SILT CHECK TYPE A IN ACCORDANCE WITH ROADWAY STANDARD DRAWING NO. 1633.01.

USE EXCELSIOR FOR MATTING MATERIAL AND ANCHOR MATTING SECTION AT TOP AND BOTTOM WITH CLASS B STONE.

PRIOR TO POLYACRYLAMIDE (PAM) APPLICATION, OBTAIN A SOIL SAMPLE FROM PROJECT LOCATION, AND FROM OFFSITE MATERIAL, AND ANALYZE FOR APPROPRIATE PAM FLOCCULANT TO BE APPLIED TO EACH ROCK SILT CHECK.

INITIALLY APPLY 4 OUNCES OF POLYACRYLAMIDE (PAM) TO TOP OF MATTING SECTION AND AFTER EVERY RAINFALL EVENT THAT EQUALS OR EXCEEDS 0.50 INCHES.

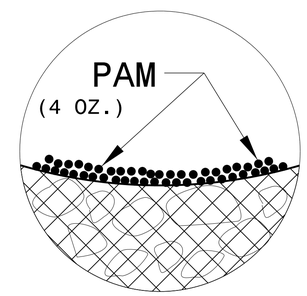

INSET A

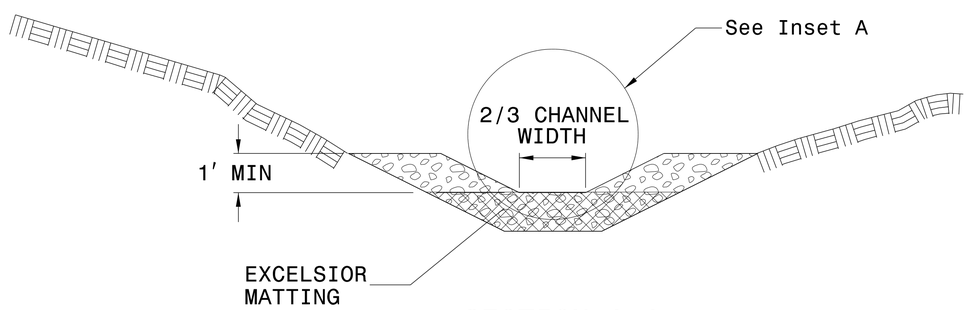

SECTION A-A

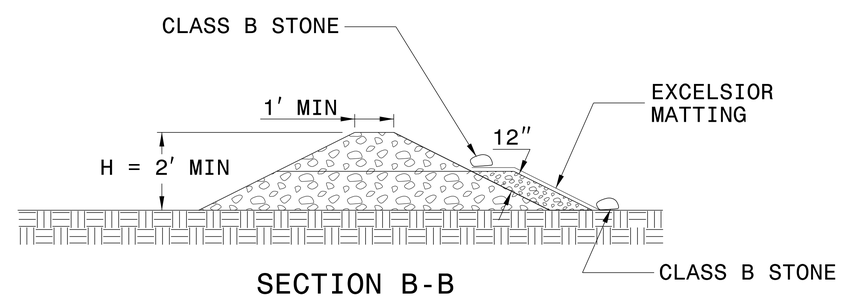

SECTION B-B

NOT TO SCALE

STATE	STATE PROJECT REFERENCE NO.	SHEET NO.	TOTAL SHEETS
N.C.	SF-230196	RF-1	
STATE PROJ. NO.	F. A. PROJ. NO.	DESCRIPTION	

PLANTING DETAILS

SEEDLING / LINER BAREROOT PLANTING DETAIL

HEALING IN

1. Locate a healing-in site in a shady, well protected area.
2. Excavate a flat bottom trench 12 inches deep and provide drainage.

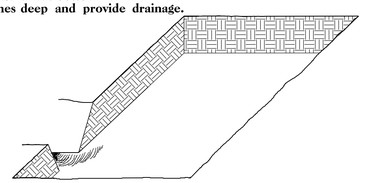

3. Backfill the trench with 2 inches well rotted sawdust. Place a 2 inch layer of well rotted sawdust at a sloping angle at one end of the trench.

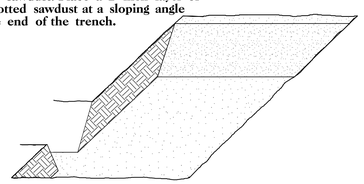

4. Place a single layer of plants against the sloping end so that the root collar is at ground level.

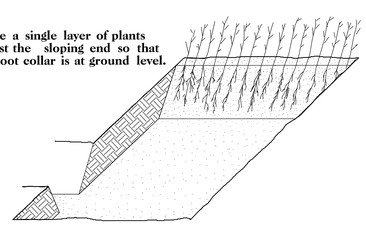

5. Place a 2 inch layer of well rotted sawdust over the roots maintaining a sloping angle.

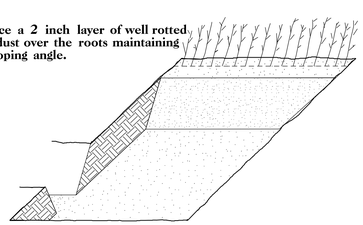

6. Repeat layers of plants and sawdust as necessary and water thoroughly.

DIBBLE PLANTING METHOD
USING THE KBC PLANTING BAR

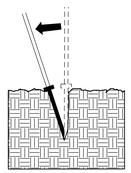

1. Insert planting bar as shown and pull handle toward planter.

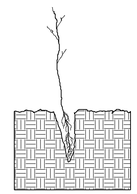

2. Remove planting bar and place seedling at correct depth.

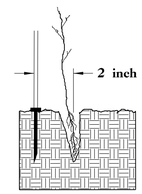

3. Insert planting bar 2 inches toward planter from seedling.

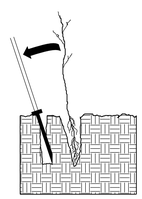

4. Pull handle of bar toward planter, firming soil at bottom.

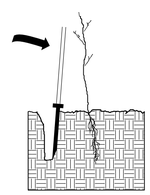

5. Push handle forward firming soil at top.

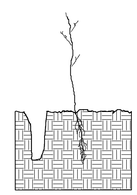

6. Leave compaction hole open. Water thoroughly.

PLANTING NOTES:

PLANTING BAG
During planting, seedlings shall be kept in a moist canvas bag or similar container to prevent the root systems from drying.

KBC PLANTING BAR
Planting bar shall have a blade with a triangular cross section, and shall be 12 inches long, 4 inches wide and 1 inch thick at center.

ROOT PRUNING
All seedlings shall be root pruned, if necessary, so that no roots extend more than 10 inches below the root collar.

REFORESTATION

☐ TREE REFORESTATION SHALL BE PLANTED 6 FT. TO 10 FT. ON CENTER, RANDOM SPACING, AVERAGING 8 FT. ON CENTER, APPROXIMATELY 680 PLANTS PER ACRE.

REFORESTATION

MIXTURE, TYPE, SIZE, AND FURNISH SHALL CONFORM TO THE FOLLOWING:

25%	LIRIODENDRON TULIPIFERA	TULIP POPLAR	12 in – 18 in BR
25%	PLATANUS OCCIDENTALIS	AMERICAN SYCAMORE	12 in – 18 in BR
25%	FRAXINUS PENNSYLVANICA	GREEN ASH	12 in – 18 in BR
25%	BETULA NIGRA	RIVER BIRCH	12 in – 18 in BR

REFORESTATION DETAIL SHEET

N.C.D.O.T. - ROADSIDE ENVIRONMENTAL UNIT

DocuSign Envelope ID: F3014F02-4A9C-4F84-BEA0-398105867EAB

09/08/99

PROJECT: 17BP.6.R.69

CONTRACT:

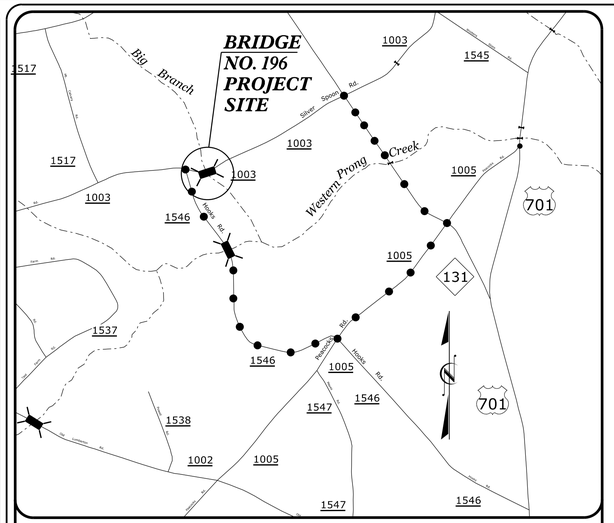

VICINITY MAP

OFF-SITE DETOUR

STATE OF NORTH CAROLINA
DIVISION OF HIGHWAYS

UTILITY CONSTRUCTION PLANS
COLUMBUS COUNTY

T.I.P. NO.	SHEET NO.
17BP.6.R.69	UC–1

WETHERILL ENGINEERING
1223 Jones Franklin Rd.
Raleigh, N.C. 27606
License No. F-0377
Bus: 919 851 8077
Fax: 919 851 8107
TRANSPORTATION PLANNING/DESIGN - BRIDGE/STRUCTURE DESIGN
CIVIL/SITE DESIGN - GIS/GPS - CONSTRUCTION OBSERVATION

LOCATION: BRIDGE NO. 230196 OVER BIG BRANCH ON SR 1003 (SILVER SPOON RD.)

TYPE OF WORK: UTILITY CONSTRUCTION

BRIDGE #230196

FINAL DESIGN
NOT RELEASED
FOR CONSTRUCTION

4

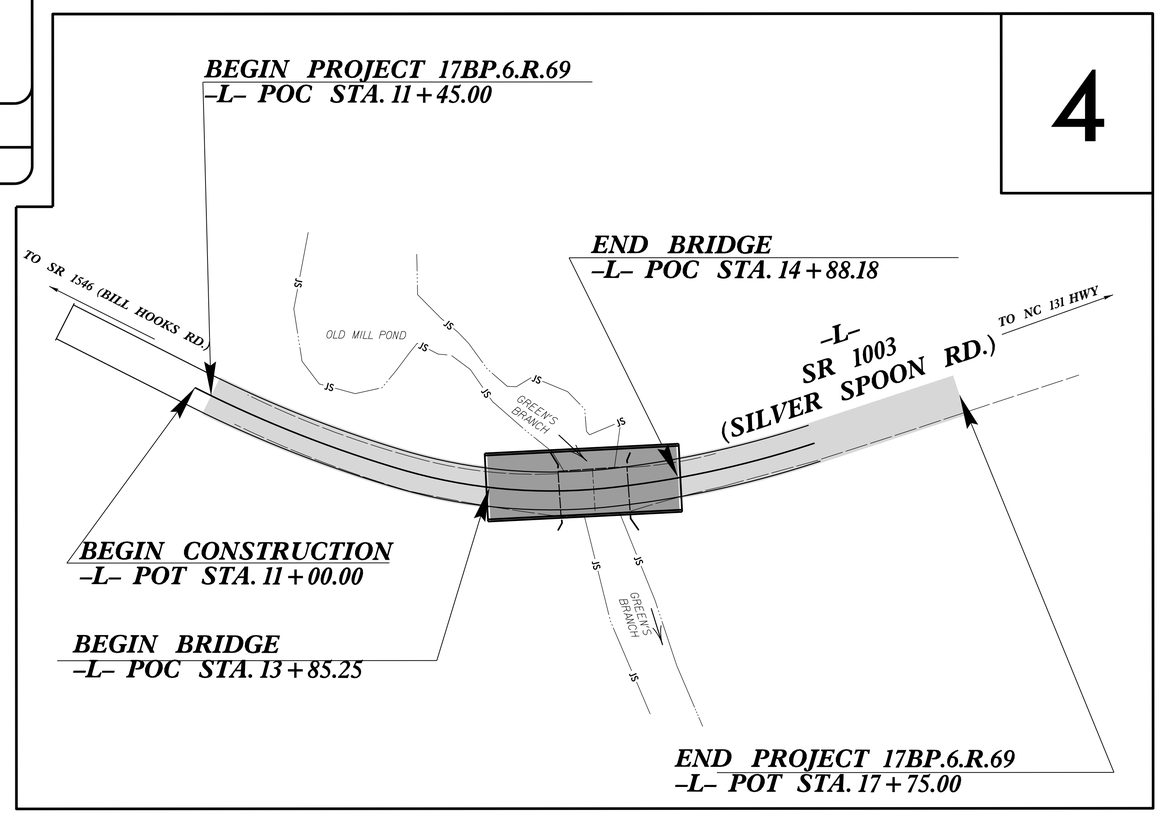

DOCUMENT NOT CONSIDERED FINAL UNLESS ALL SIGNATURES COMPLETED

NORTH CAROLINA PROFESSIONAL SEAL 022321 ENGINEER MICHAEL V. ZACCARDO
5/23/2017
DocuSigned by: Michael V. Zaccardo
UTILITY CONSTRUCTION PLANS ONLY

GRAPHIC SCALES

30 15 0 30 60
PLANS

30 15 0 30 60
PROFILE (HORIZONTAL)

6 3 0 6 12
PROFILE (VERTICAL)

INDEX OF SHEETS

SHEET NO.	DESCRIPTION
UC–1	TITLE SHEET
UC–2	PLAN & PROFILE SHEET
UC–3	DETAIL SHEET

WATER AND SEWER OWNERS ON PROJECT

(1) COLUMBUS COUNTY (WATER)

WETHERILL ENGINEERING
Prepared for: DIVISION OF HIGHWAYS
DIVISION SIX
in the Office of:
1223 JONES FRANKLIN ROAD
Raleigh, N.C. 27606
License No. F-0377
Bus: 919 851 8077
Fax: 919 851 8107

2012 STANDARD SPECIFICATIONS

RIGHT OF WAY DATE:

LETTING DATE:
JUNE 20, 2017

NCDOT CONTACT:

EDWARD G. WETHERILL, PE
PROJECT ENGINEER

GREG S. PURVIS, PE
PROJECT DESIGN ENGINEER

MICHAEL V. ZACCARDO, PE
UTILITY DESIGN ENGINEER

CHRISTY W. HUFF, PE
DIVISION 6 BRIDGE PROGRAM MANAGER

STATE OF NORTH CAROLINA DEPARTMENT OF TRANSPORTATION

5/23/2017
I:\Proj\230196_ut_tsh_UC1_psh.dgn
USER:skennedy

DocuSign Envelope ID: F3014F02-4A9C-4F84-BEA0-398105867EAB

BRIDGE 230196	
UTILITY CONSTRUCTION PLANS	
PROJECT REFERENCE NO. 17BP.6.R.69	SHEET NO. UC-2
DESIGNED BY: MVZ	
DRAWN BY: SLK	
CHECKED BY: MVZ	
APPROVED BY: MVZ	
REVISED:	
NORTH CAROLINA DEPARTMENT OF TRANSPORTATION	
UTILITIES ENGINEERING SEC. PHONE:(919)707-6690 FAX:(919)250-4151	UTILITY CONSTRUCTION PLANS ONLY

NORTH CAROLINA PROFESSIONAL SEAL 022321 5/23/2017 ENGINEER MICHAEL V. ZACCARDO

Designed by: Michael V. Zaccardo

WETHERILL ENGINEERING
1223 Jones Franklin Rd.
Raleigh, N.C. 27606
License No. F-0377
Bus: 919 851 8077
Fax: 919 851 8107

TRANSPORTATION PLANNING/DESIGN ~ BRIDGE/STRUCTURE DESIGN
CIVIL/SITE DESIGN ~ GIS/GPS ~ CONSTRUCTION OBSERVATION

DOCUMENT NOT CONSIDERED FINAL UNLESS ALL SIGNATURES COMPLETED

FINAL DESIGN
NOT RELEASED FOR CONSTRUCTION

NAD 83/NA 2011

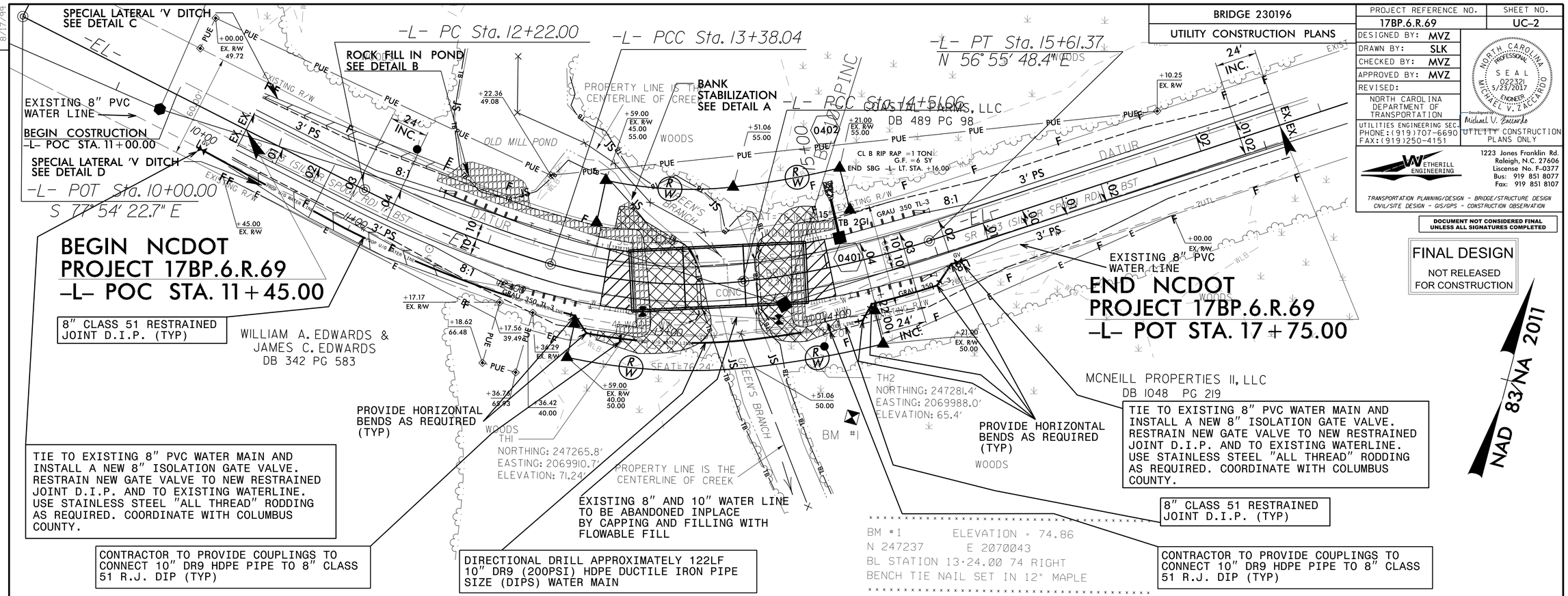

GENERAL INSTALLATION NOTES:
1) ALL WATERLINE CONSTRUCTION SHALL BE IN ACCORDANCE WITH THE LATEST COLUMBUS COUNTY PUBLIC UTILITIES DEPARTMENT AND NCDENR DEH PWS STANDARDS AND SPECIFICATIONS.

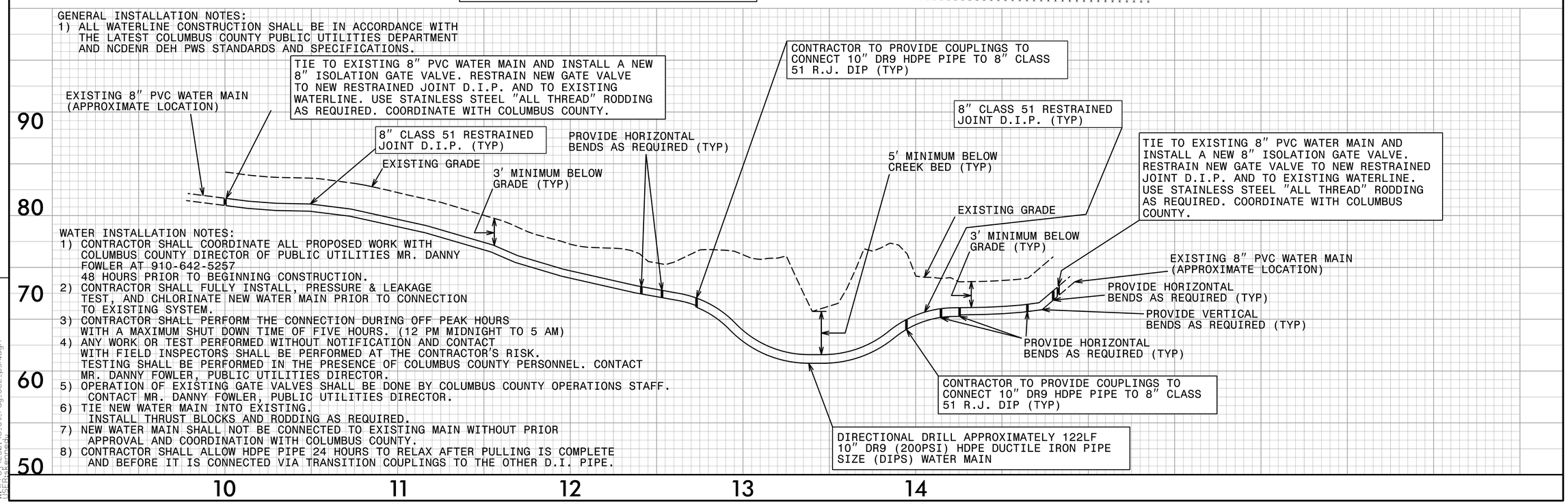

WATER INSTALLATION NOTES:
1) CONTRACTOR SHALL COORDINATE ALL PROPOSED WORK WITH COLUMBUS COUNTY DIRECTOR OF PUBLIC UTILITIES MR. DANNY FOWLER AT 910-642-5257 48 HOURS PRIOR TO BEGINNING CONSTRUCTION.
2) CONTRACTOR SHALL FULLY INSTALL, PRESSURE & LEAKAGE TEST, AND CHLORINATE NEW WATER MAIN PRIOR TO CONNECTION TO EXISTING SYSTEM.
3) CONTRACTOR SHALL PERFORM THE CONNECTION DURING OFF PEAK HOURS WITH A MAXIMUM SHUT DOWN TIME OF FIVE HOURS. (12 PM MIDNIGHT TO 5 AM)
4) ANY WORK OR TEST PERFORMED WITHOUT NOTIFICATION AND CONTACT WITH FIELD INSPECTORS SHALL BE PERFORMED AT THE CONTRACTOR'S RISK. TESTING SHALL BE PERFORMED IN THE PRESENCE OF COLUMBUS COUNTY PERSONNEL. CONTACT MR. DANNY FOWLER, PUBLIC UTILITIES DIRECTOR.
5) OPERATION OF EXISTING GATE VALVES SHALL BE DONE BY COLUMBUS COUNTY OPERATIONS STAFF. CONTACT MR. DANNY FOWLER, PUBLIC UTILITIES DIRECTOR.
6) TIE NEW WATER MAIN INTO EXISTING. INSTALL THRUST BLOCKS AND RODDING AS REQUIRED.
7) NEW WATER MAIN SHALL NOT BE CONNECTED TO EXISTING MAIN WITHOUT PRIOR APPROVAL AND COORDINATION WITH COLUMBUS COUNTY.
8) CONTRACTOR SHALL ALLOW HDPE PIPE 24 HOURS TO RELAX AFTER PULLING IS COMPLETE AND BEFORE IT IS CONNECTED VIA TRANSITION COUPLINGS TO THE OTHER D.I. PIPE.

REVISIONS

5/23/2017
17BP.6.R.69_230196_ut_rdy_UC2_psh.dgn
USER:skennedy

DocuSign Envelope ID: F3014F02-4A9C-4F84-BEA0-398105867EAB

8/17/99

REVISIONS

BRIDGE 230196	PROJECT REFERENCE NO.	SHEET NO.
UTILITY CONSTRUCTION PLANS	17BP.6.R.69	UC-3

WETHERILL ENGINEERING
1223 Jones Franklin Rd.
Raleigh, N.C. 27606
Liscense No. F-0377
Bus: 919 851 8077
Fax: 919 851 8107
TRANSPORTATION PLANNING/DESIGN - BRIDGE/STRUCTURE DESIGN
CIVIL/SITE DESIGN - GIS/GPS - CONSTRUCTION OBSERVATION

DOCUMENT NOT CONSIDERED FINAL UNLESS ALL SIGNATURES COMPLETED

DESIGNED BY: MVZ
DRAWN BY: JDS
CHECKED BY: MVZ
APPROVED BY: MVZ
REVISED:

NORTH CAROLINA DEPARTMENT OF TRANSPORTATION
UTILITIES ENGINEERING SEC.
PHONE:(919)707-6690
FAX:(919)250-4151

NORTH CAROLINA PROFESSIONAL SEAL 022321 5/23/2017 ENGINEER MICHAEL V. ZACCARDO

DocuSigned by: Michael V. Zaccardo
UTILITY CONSTRUCTION PLANS ONLY

UTILITY CONSTRUCTION

FINAL DESIGN
NOT RELEASED FOR CONSTRUCTION

THRUST BLOCKING

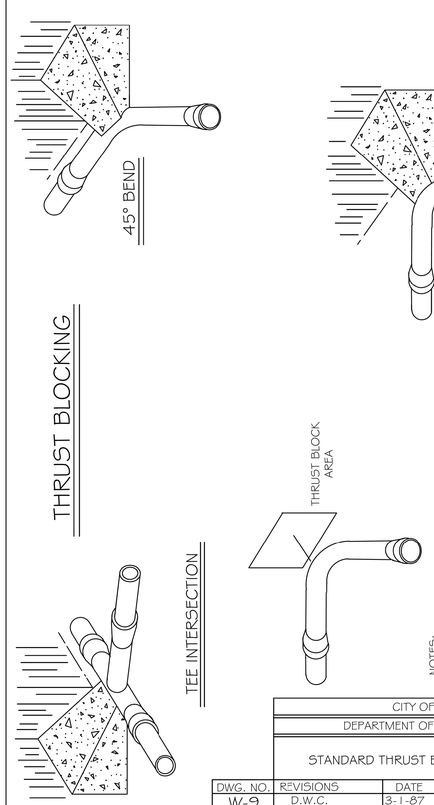

NOTES:
1. CONCRETE SHALL BE 3000 PSI
2. CONCRETE SHALL NOT CONTACT BOLTS OR ENDS OF MECHANICAL JOINT FITTINGS.
3. TRENCHES SHALL CONFORM TO STANDARD DETAIL W-3
4. SEE STANDARD THRUST BLOCK TABLES, W-10 THRU W-11, FOR AREA OF CONCRETE REQUIRED.
5. ALL BENDS AND INTERSECTIONS SHALL HAVE CONCRETE THRUST BLOCKING.

CITY OF RALEIGH
DEPARTMENT OF PUBLIC UTILITIES
STANDARD THRUST BLOCKING VIEWS

DWG. NO.	REVISIONS	DATE	REVISIONS	DATE
W-9	D.W.C.	3-1-87	RRH	3 31 00
		9-7-99	D.H.L.	6-18-08

REACTION BEARING AREAS FOR HORIZONTAL WATER PIPE BENDS

BASED ON TEST PRESSURE OF 200 P.S.I.

ALL AREAS GIVEN IN SQUARE FEET.

SIZE AND DEGREE OF BEND	STATIC THRUST IN POUNDS	MODERATELY DRY CLAY 4000 LBS/FT²	SOFT CLAY 2000 LBS/FT²	LOOSE GRAVEL 1600 LBS/FT² COARSE SAND	DRY CLAY 8000 LBS/FT² ALWAYS DRY	SAND COMPACT FIRM 8000 LBS/FT²	SAND CLEAN DRY 4000 LBS/FT²	SOIL QUICKSAND 1600 LBS/FT²	ROCK - POOR TO VERY POOR 10,000 LBS/FT²
6"									
11 1/4°	1,108	1	1	1	1	1	1	2	1
22 1/2°	2,207	1	2	2	1	1	1	3	1
45°	4,328	2	3	3	1	1	2	5	1
90°	7,996	2	4	5	1	1	2	8	1
PLUG	5,655	2	3	4	1	1	2	6	1
8"									
11 1/4°	1,970	1	1	2	1	1	1	2	1
22 1/2°	3,922	1	2	3	1	1	1	4	1
45°	7,694	2	4	5	1	1	2	8	1
90°	14,215	4	8	9	2	2	4	15	2
PLUG	10,053	3	5	6	2	2	3	10	1
12"									
11 1/4°	4,433	2	3	3	1	1	2	5	1
22 1/2°	8,826	3	5	6	2	2	3	9	1
45°	17,312	5	9	11	3	3	5	18	2
90°	31,983	8	16	19	4	4	8	32	4
PLUG	22,619	6	12	14	3	3	6	23	3
16"									
11 1/4°	7,881	2	4	5	1	1	2	8	1
22 1/2°	15,691	4	8	10	2	2	4	16	2
45°	30,779	8	16	19	4	4	8	31	4
90°	56,861	15	29	35	8	8	15	57	6
PLUG	40,213	10	21	25	5	5	10	41	5

REACTION BEARING AREAS ARE IN SQUARE FEET MEASURED IN A VERTICAL PLANE IN THE TRENCH SIDE AT AN ANGLE OF 90° TO THE THRUST VECTOR.

USE 6" - 90 BEND VALUE FOR HYDRANTS FOR ADDITIONAL SAFETY FACTOR.

CITY OF RALEIGH
DEPARTMENT OF PUBLIC UTILITIES
THRUST BLOCKING DESIGN QUANTITY TABLE

DWG. NO.	REVISIONS	DATE	REVISIONS	DATE
W-10	D.W.C.	6-23-99		

5/23/2017
i:\230196_ut_rdy4_UC3_psh.dgn
USERnaskennedy

09/08/99

TIP PROJECT: 17BP.6.R.69

See Sheet 1A For Index of Sheets
See Sheet 1B For Conventional Symbols
See Sheet 1C For Survey Control Sheet

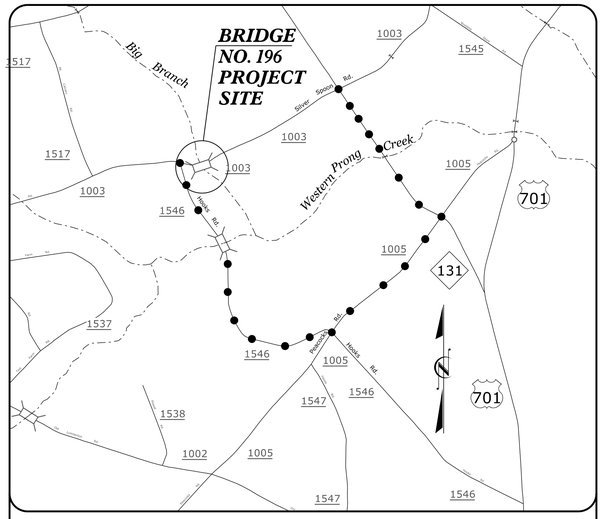

VICINITY MAP

OFF-SITE DETOUR

STATE OF NORTH CAROLINA
DIVISION OF HIGHWAYS

UTILITIES BY OTHERS PLANS
COLUMBUS COUNTY

T.I.P. NO.	SHEET NO.
17BP.6.R.69	UO–1

NOTE:
ALL UTILITY WORK SHOWN ON THIS SHEET IS DONE BY OTHERS.
NO PAYMENT WILL BE MADE TO THE CONTRACTOR FOR UTILITY WORK SHOWN ON THIS SHEET.

BRIDGE #230196

LOCATION: BRIDGE NO. 230196 OVER BIG BRANCH ON SR 1003 (SILVER SPOON RD.)

TYPE OF WORK: POWER, WATER, AND TELEPHONE RELOCATION

UO2 | 4

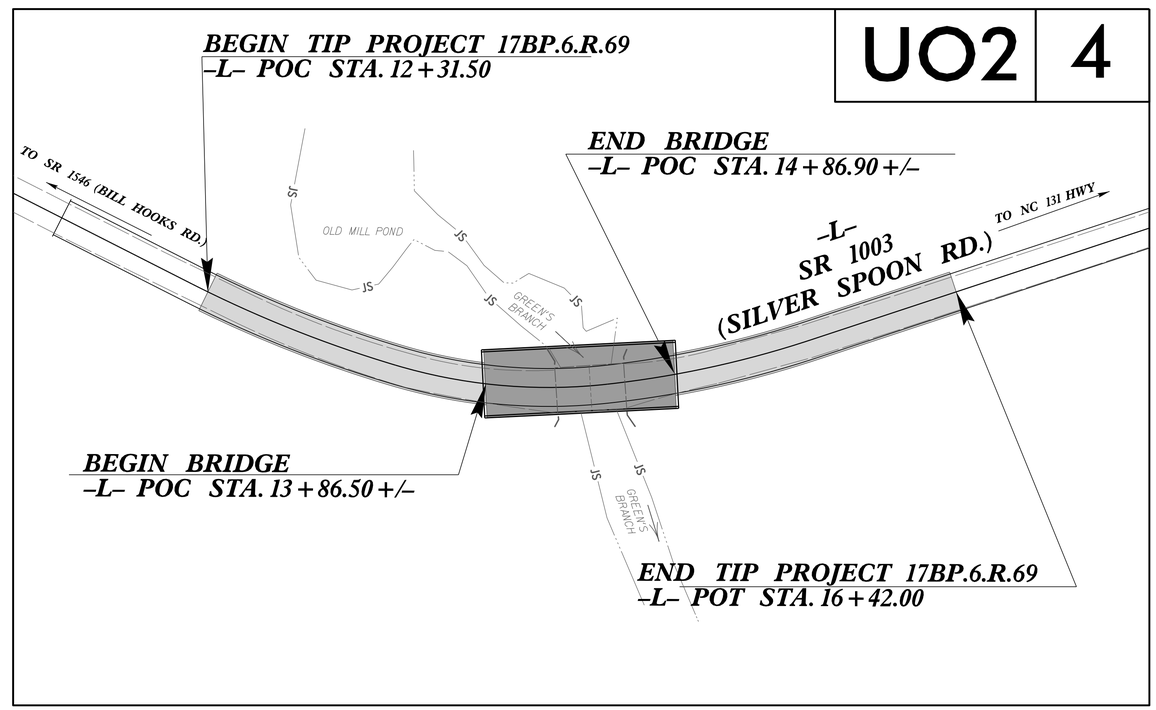

CLEARING ON THIS PROJECT SHALL BE PERFORMED TO THE LIMITS ESTABLISHED BY METHOD II.

THIS PROJECT IS NOT WITHIN ANY MUNICIPAL BOUNDARIES.

GRAPHIC SCALES

50 25 0 50 100
PLANS

50 25 0 50 100
PROFILE (HORIZONTAL)

10 5 0 10 20
PROFILE (VERTICAL)

INDEX OF SHEETS

SHEET NO.:	DESCRIPTION:
UO–1	TITLE SHEET
UO–2	UBO PLAN SHEET

UTILITY OWNERS WITH CONFLICTS

(A) POWER – BRUNSWICK EMC
(B) TELEPHONE – STAR TELEPHONE

Prepared in the Office of:
WETHERILL ENGINEERING
1223 Jones Franklin Rd. Raleigh, N.C. 27606
License No. F-0377
Bus: 919.851.8077 Fax: 919.851.8107

John D. Schriner, PLS — UTILITY PROJECT MANAGER
Sonny Upole, PE — PROJECT UTILITY COORDINATOR

DIVISION OF HIGHWAYS
DIVISION 6
558 Gillespie Street
Fayetteville NC, 28301

Christy W. Huff, PE — DIVISION 6 BRIDGE PROGRAM MANAGER

$$$

BRIDGE NO. 230196	PROJECT REFERENCE NO.	SHEET NO.
	17BP.6.R.69	U0-2

UTILITIES BY OTHERS

NOTE:
ALL UTILITY WORK SHOWN ON THIS SHEET WILL BE DONE BY OTHERS. NO PAYMENT WILL BE MADE TO THE CONTRACTOR FOR UTILITY WORK SHOWN ON THIS SHEET.

WETHERILL ENGINEERING
1223 Jones Franklin Rd.
Raleigh, N.C. 27606
Liscense No. F-0377
Bus: 919 851 8077
Fax: 919 851 8107
TRANSPORTATION PLANNING/DESIGN - BRIDGE/STRUCTURE DESIGN
CIVIL/SITE DESIGN - GIS/GPS - CONSTRUCTION OBSERVATION

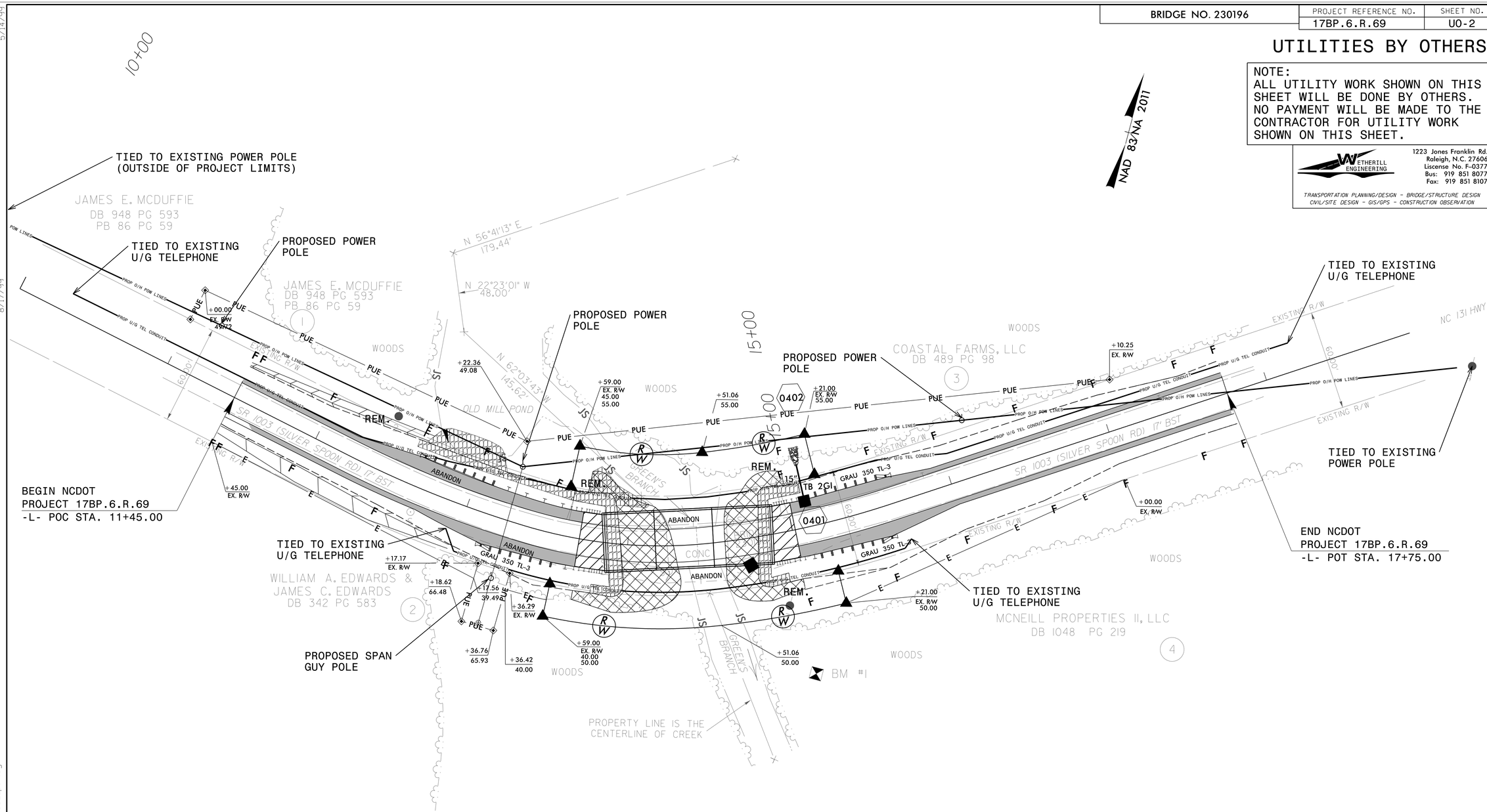

5/14/99
8/17/99

PROJ. REFERENCE NO.	SHEET NO.
17BP.6.R.69	X-1

STATE OF NORTH CAROLINA
DIVISION OF HIGHWAYS

NOTE: EMBANKMENT COLUMN INCLUDES BACKFILL FOR UNDERCUT

CROSS-SECTION SUMMARY

Approximate quantities only. Unclassified excavation, borrow excavation, shoulder borrow, fine grading, clearing and grubbing, breaking of existing pavement and removal of existing pavement will be paid for at the lump sum price for "Grading".

Station L	Uncl. Exc. (cu. yd.)	Embt (cu. yd.)
12+31.50	0	0
12+50.00	3	4
13+00.00	6	25
13+50.00	6	37

Station L	Uncl. Exc. (cu. yd.)	Embt (cu. yd.)
15+00.00	0	0
15+50.00	11	89
16+00.00	4	56
16+42.00	6	10

0 5 10	PROJ. REFERENCE NO.	SHEET NO.
	17BP.6.R.69	X-2

PRELIMINARY PLANS
DO NOT USE FOR CONSTRUCTION

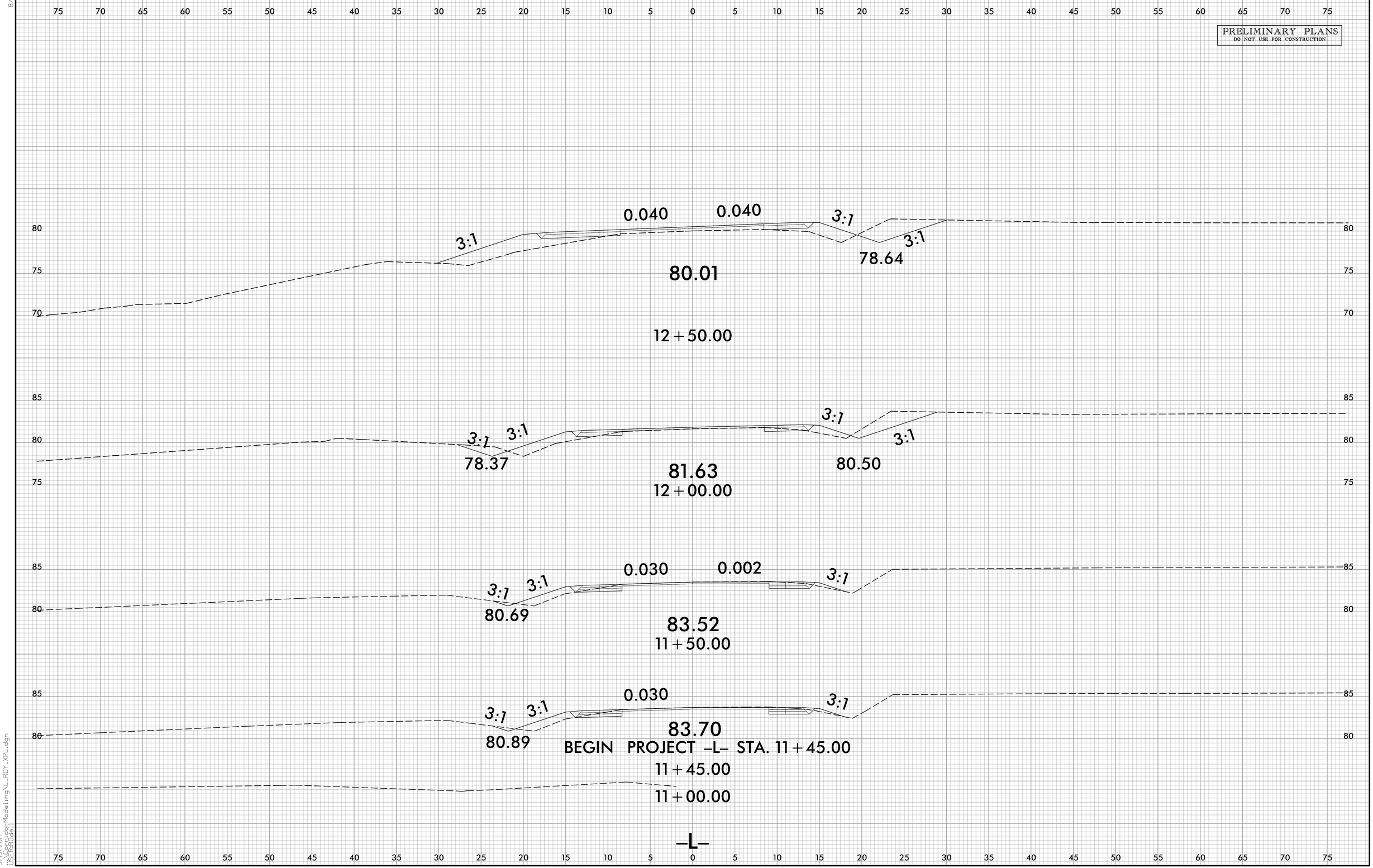

8/23/99

5/19/2017
USERROdell
\Corridor\Modeling\L_RDY_XPL.dgn

0 5 10	PROJ. REFERENCE NO.	SHEET NO.
	17BP.6.R.69	X-3

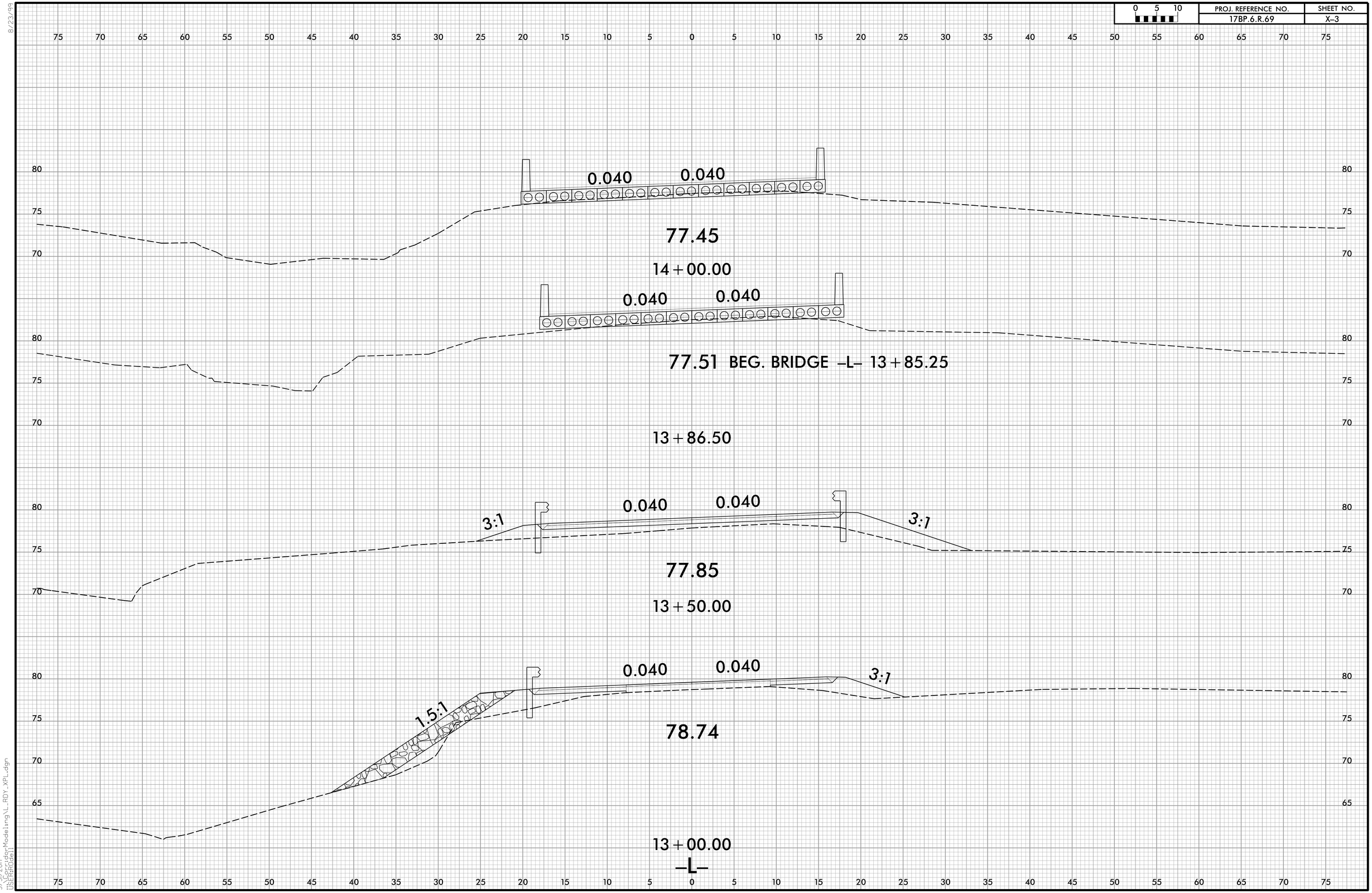

8/23/99

5/31/2017
Corridor Modeling\L_RDY_XPL.dgn
USERRODELL

0 5 10	PROJ. REFERENCE NO.	SHEET NO.
	17BP.6.R.69	X-4

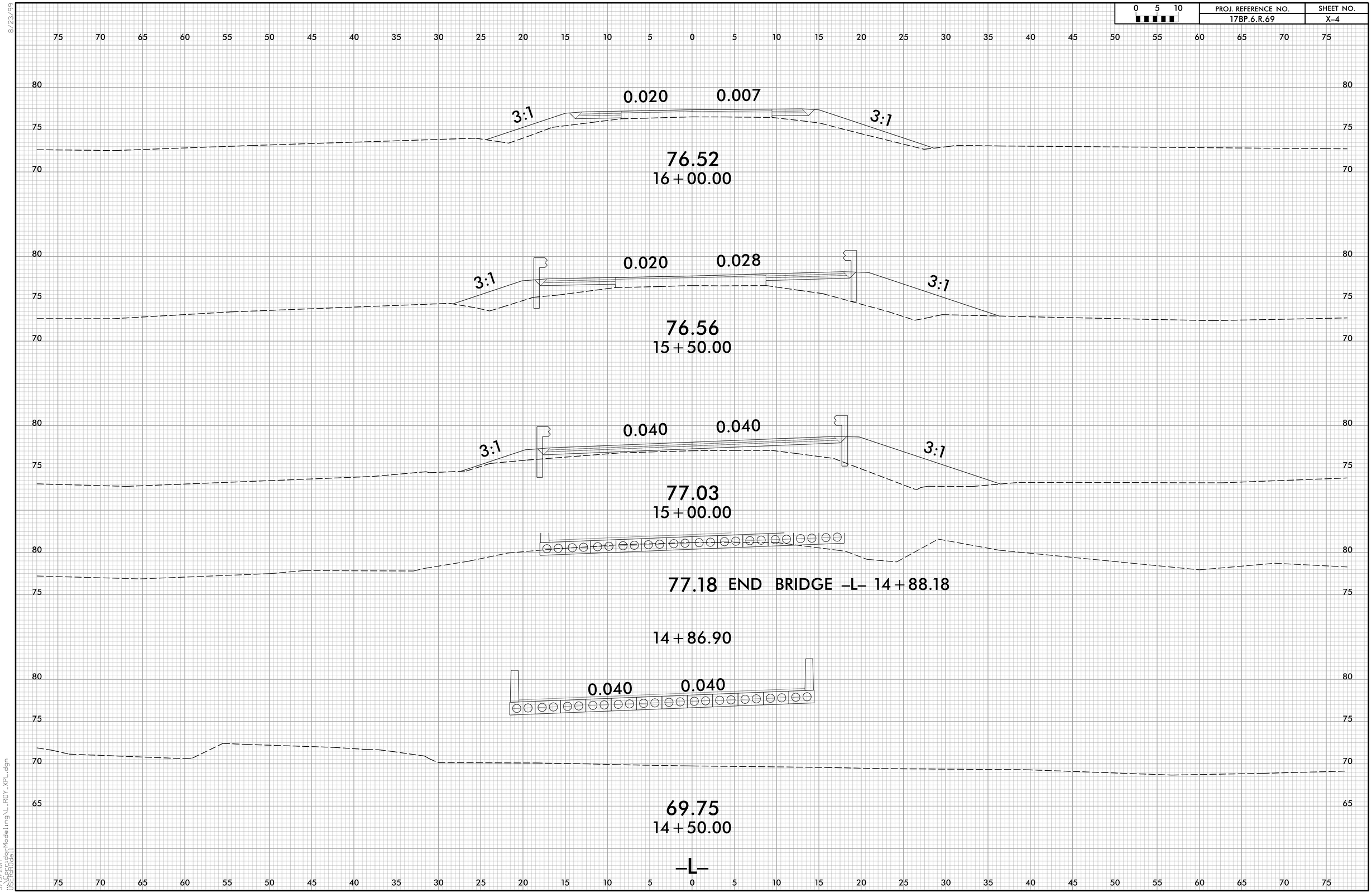

8/23/99

5/19/2017
USERROdell
\Corridor\Modeling\L_RDY_XPL.dgn

0 5 10	PROJ. REFERENCE NO.	SHEET NO.
	17BP.6.R.69	X-5

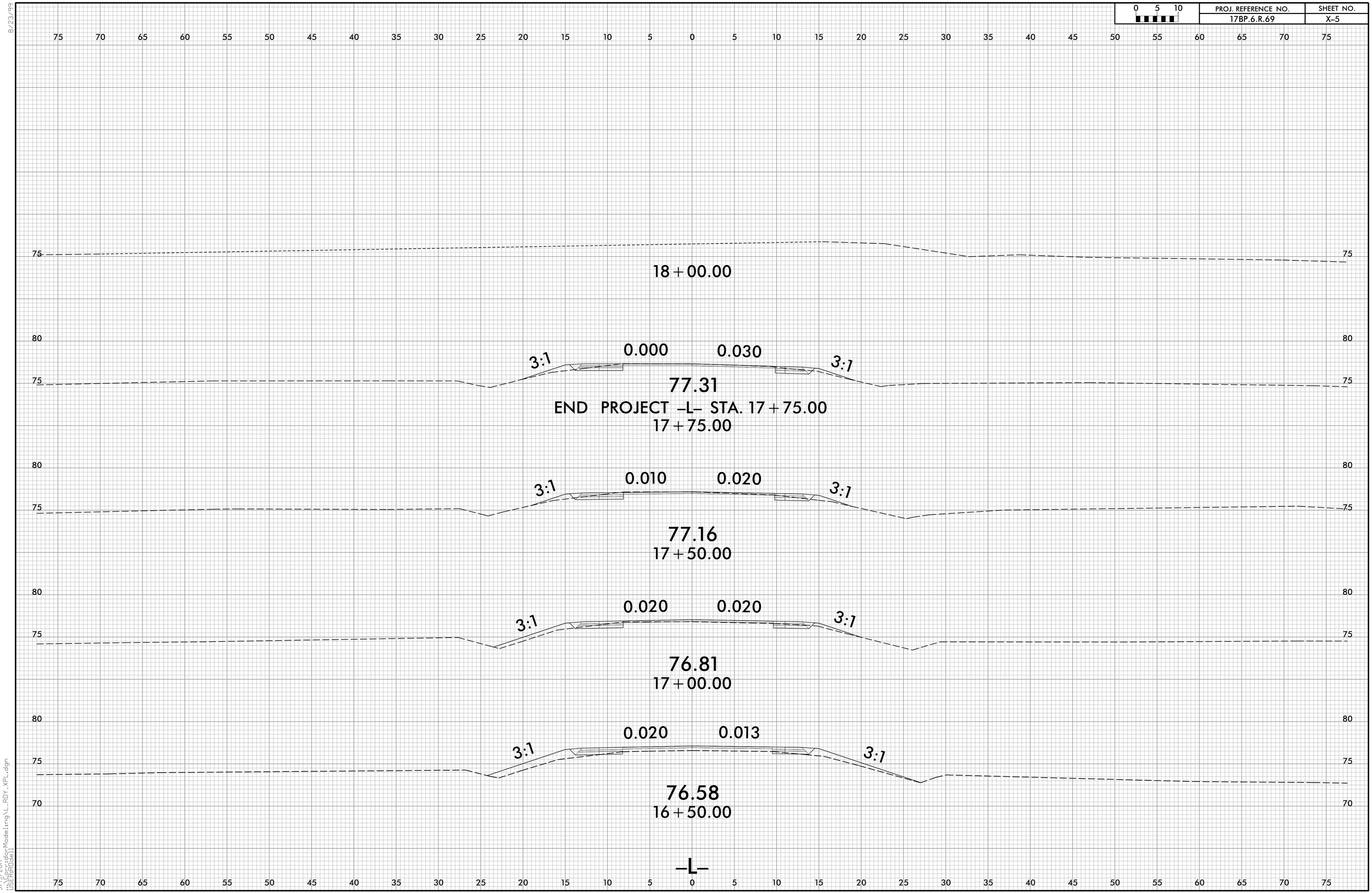

8/23/99

5/19/2017
C:\Corridor Modeling\L_RDY_XPL.dgn
USERRODell

PROJECT: 17BP.6.R.69

CONTRACT: DF00169

STATE OF NORTH CAROLINA
DIVISION OF HIGHWAYS

COLUMBUS COUNTY

STATE	STATE PROJECT REFERENCE NO.	SHEET NO.	TOTAL SHEETS
N.C.	17BP.6.R.69		

STATE PROJ. NO.	F. A. PROJ. NO.	DESCRIPTION
17BP.6.R.69	N/A	PE
17BP.6.R.69	N/A	R/W /UTIL.
17BP.6.R.69	N/A	CONST.

BRIDGE #230196

LOCATION: BRIDGE NO. 230196 OVER BIG BRANCH ON SR 1003 (SILVER SPOON RD.)

TYPE OF WORK: GRADING, DRAINAGE, PAVING & STRUCTURE

STRUCTURE PLANS

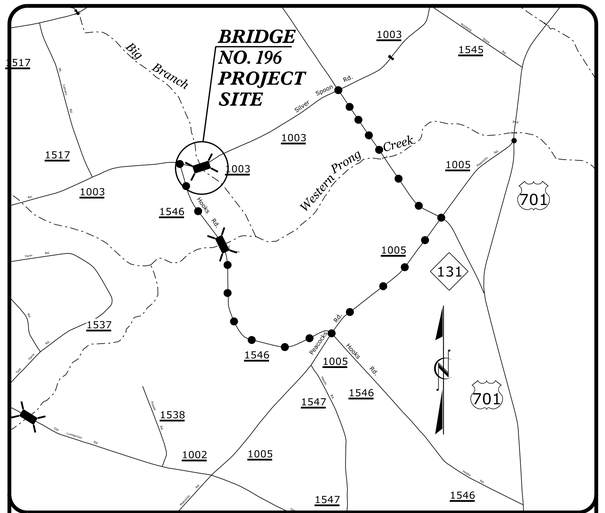

VICINITY MAP

OFF-SITE DETOUR

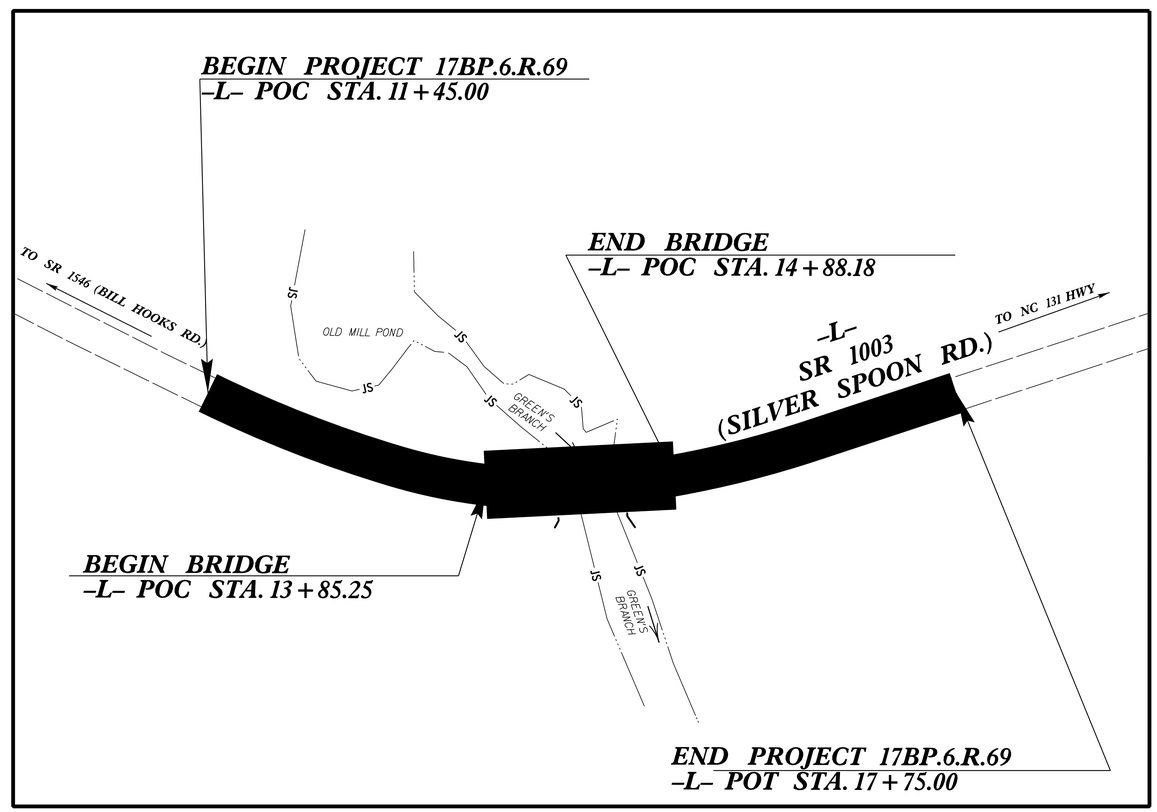

NAD 83/NA 2011

DESIGN DATA

ADT 2016 = 350

T = 6 % *

**V = 55 MPH

* TTST = 3% DUAL = 3%

FUNC. CLASS = RURAL LOCAL (SUBREGIONAL)

**DESIGN EXCEPTION NEEDED HORIZONTAL CURVE RADIUS & STOPING SIGHT DISTANCE

PROJECT LENGTH

LENGTH ROADWAY PROJECT 17BP.6.R.69	=	0.100 MILES
LENGTH STRUCTURE PROJECT 17BP.6.R.69	=	0.019 MILES
TOTAL LENGTH PROJECT 17BP.6.R.69	=	0.119 MILES

Prepared in the Office of:
WETHERILL ENGINEERING
1223 Jones Franklin Rd. Raleigh, N.C. 27606
License No. F-0377
Bus: 919.851.8077 Fax: 919.851.8107

2012 STANDARD SPECIFICATIONS

LETTING DATE:
JUNE 20, 2017

NCDOT CONTACT:

Prepared for:
DIVISION OF HIGHWAYS
DIVISION 6
558 Gillespie Street
Fayetteville NC, 28301

EDWARD G. WETHERILL, PE
PROJECT ENGINEER

B.C. HUNT, P.E.
PROJECT DESIGN ENGINEER

CHRISTY W. HUFF, PE
DIVISION 6 BRIDGE PROGRAM MANAGER

STATE OF NORTH CAROLINA • DEPARTMENT OF TRANSPORTATION

09/08/99

5/17/2017
2:40:55 PM
P:\2016\1651.01_COLUMBUS_I96\Structures\DGN\COLUMBUS_I96_TSH.dgn

DocuSign Envelope ID: 8C685FC1-CEF0-4ACA-9D8E-B3E25A2F004A

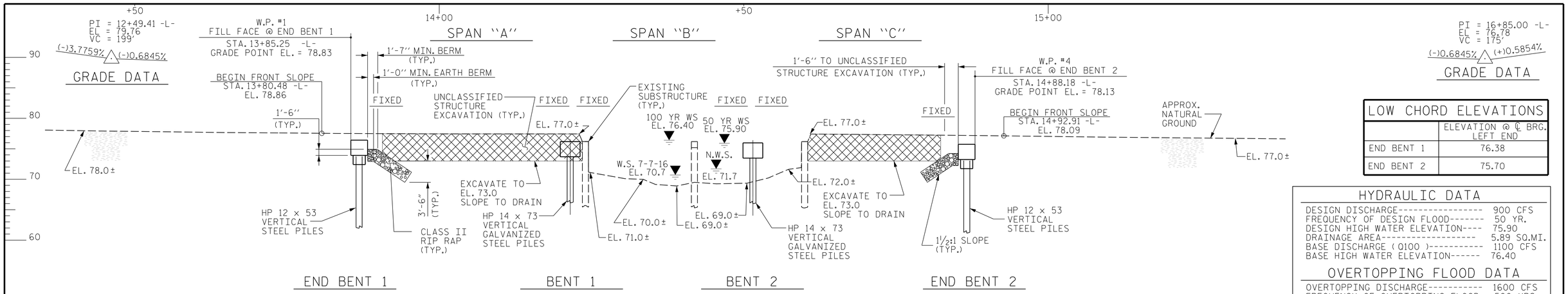

SECTION ALONG LONG CHORD

PI = 16+85.00 -L-
EL = 76.78
VC = 175'
(-)0.6845% (+)0.5854%
GRADE DATA

LOW CHORD ELEVATIONS	
	ELEVATION @ ℄ BRG. LEFT END
END BENT 1	76.38
END BENT 2	75.70

HYDRAULIC DATA

DESIGN DISCHARGE----------	900 CFS
FREQUENCY OF DESIGN FLOOD-------	50 YR.
DESIGN HIGH WATER ELEVATION----	75.90
DRAINAGE AREA----------	5.89 SQ.MI.
BASE DISCHARGE (Q100)----------	1100 CFS
BASE HIGH WATER ELEVATION------	76.40

OVERTOPPING FLOOD DATA

OVERTOPPING DISCHARGE----------	1600 CFS
FREQUENCY OF OVERTOPPING FLOOD-	500 YRS
OVERTOPPING FLOOD ELEVATION----	71.10 *

* OVERTOPPING OCCURS @ CENTER STA. 16+91.80 -L-

I HEREBY CERTIFY THESE PLANS ARE THE AS-BUILT PLANS

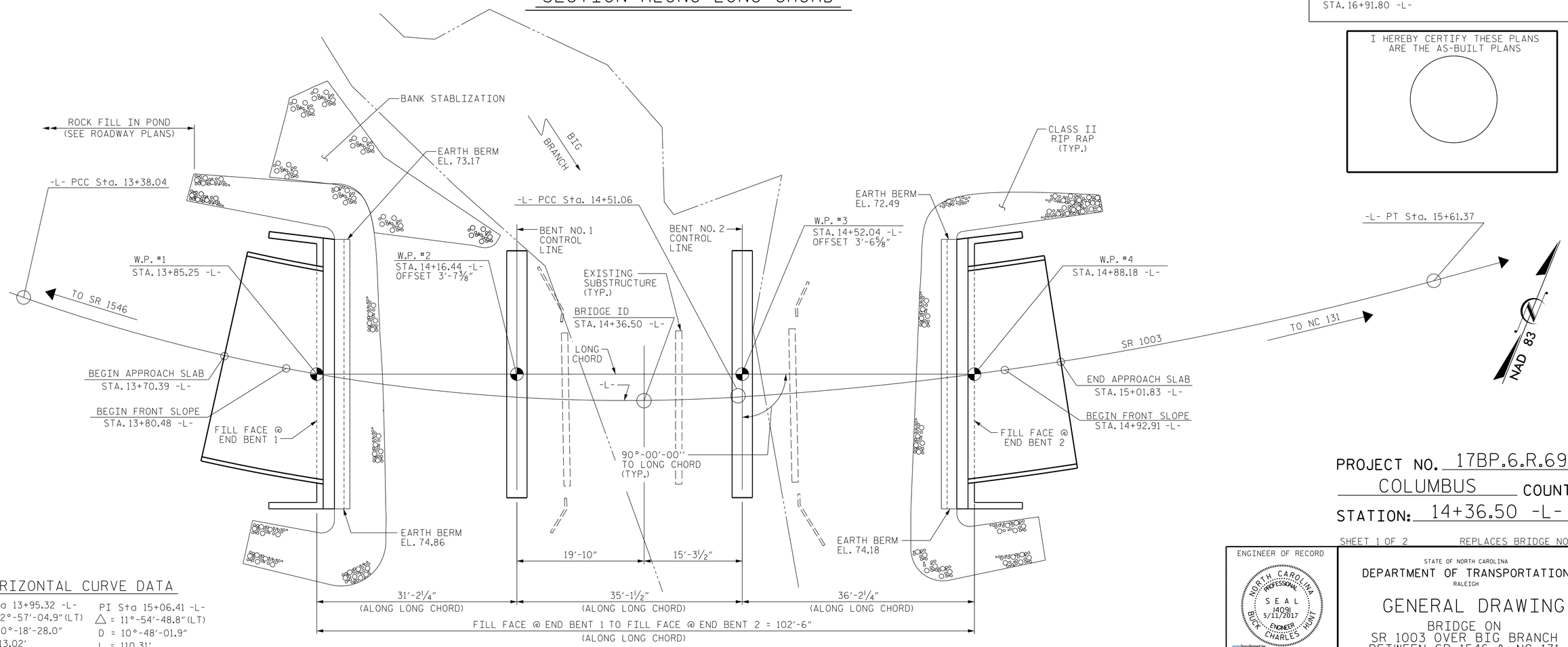

PLAN

(PILES NOT SHOWN IN PLAN VIEW)

HORIZONTAL CURVE DATA

PI Sta 13+95.32 -L-	PI Sta 15+06.41 -L-
△ = 22°-57'-04.9"(LT)	△ = 11°-54'-48.8"(LT)
D = 20°-18'-28.0"	D = 10°-48'-01.9"
L = 113.02'	L = 110.31'
T = 57.28'	T = 55.35'
R = 282.14'	R = 530.49'
SE = .04	SE = .04
* DS = 30 mph	DS = 40 mph

NOTE:
W.P. #2 & W.P. #3 ARE LOCATED ON THE BRIDGE LONG CHORD.

DRAWN BY : J. PENDERGRAFT DATE : 3-17
CHECKED BY : J. DILWORTH DATE : 4-17

DOCUMENT NOT CONSIDERED FINAL UNLESS ALL SIGNATURES COMPLETED

ENGINEER OF RECORD
NORTH CAROLINA PROFESSIONAL SEAL 14091 ENGINEER BUCK CHARLES HUNT 5/11/2017
DocuSigned by: Buck Charles Hunt
2F15C83875BA4EC...

WETHERILL ENGINEERING
1223 Jones Franklin Rd.
Raleigh, N.C. 27606
Bus: 919 851 8077
Fax: 919 851 8107
LICENSE NO. F-0377

PROJECT NO. 17BP.6.R.69
COLUMBUS COUNTY
STATION: 14+36.50 -L-

SHEET 1 OF 2 REPLACES BRIDGE NO. 196

STATE OF NORTH CAROLINA
DEPARTMENT OF TRANSPORTATION
RALEIGH

GENERAL DRAWING

BRIDGE ON
SR 1003 OVER BIG BRANCH
BETWEEN SR 1546 & NC 131

REVISIONS								SHEET NO.
NO.	BY:	DATE:	NO.	BY:	DATE:			S-1
1			3					TOTAL SHEETS
2			4					23

P:\2016\16151.01_COLUMBUS_196\Structures\DGN\COLUMBUS 196 GD.dgn
5/10/2017 1:49:11 PM

DocuSign Envelope ID: 8C685FC1-CEF0-4ACA-9D8E-B3E25A2F004A

BM-1 (BENCH TIE NAIL SET IN 12" MAPLE) 88' RT. OF -L- 14+97.17; N 247237 E 2070043; EL. 74.86

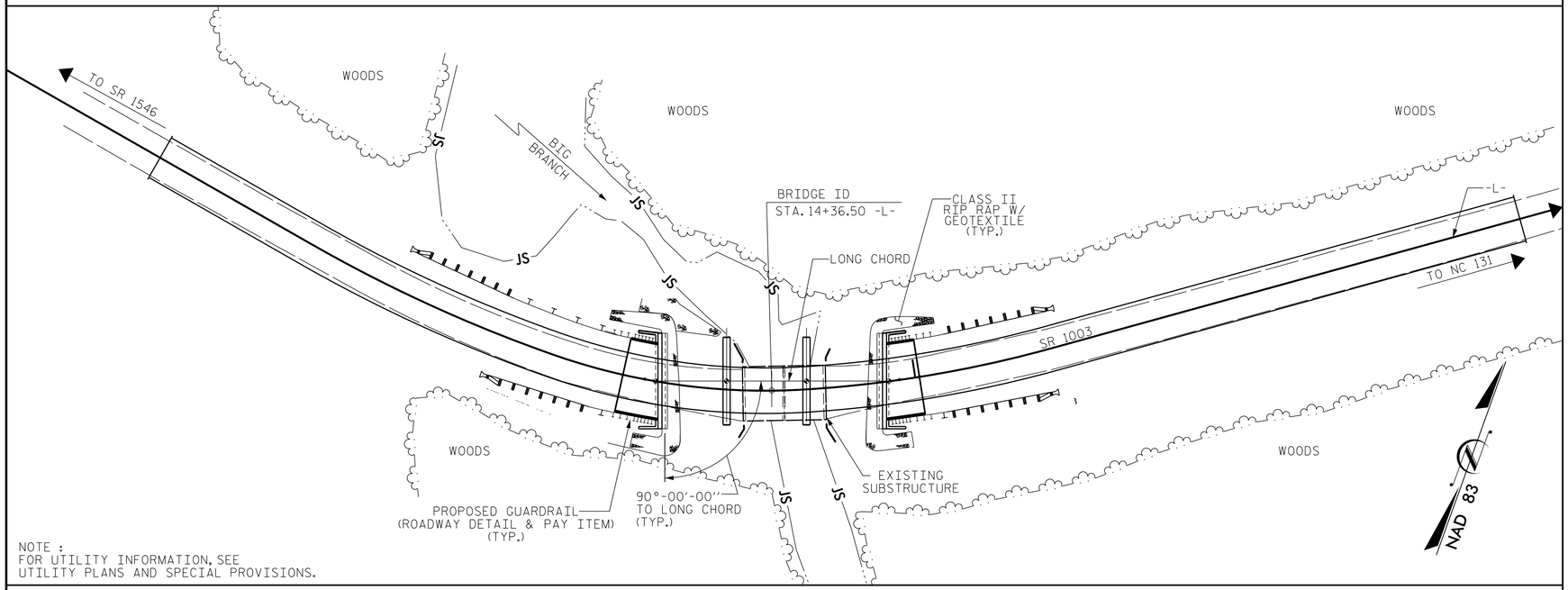

NOTE :
FOR UTILITY INFORMATION, SEE
UTILITY PLANS AND SPECIAL PROVISIONS.

LOCATION SKETCH

NOTES:

ASSUMED LIVE LOAD = HL-93 OR ALTERNATE LOADING.

THIS BRIDGE HAS BEEN DESIGNED IN ACCORDANCE WITH THE AASHTO LRFD BRIDGE DESIGN SPECIFICATIONS.

THIS BRIDGE IS LOCATED IN SEISMIC ZONE 2.

FOR OTHER DESIGN DATA AND GENERAL NOTES, SEE SHEET SN.

FOR SUBMITTAL OF WORKING DRAWINGS, SEE SPECIAL PROVISIONS.

FOR FALSEWORK AND FORMWORK, SEE SPECIAL PROVISIONS.

FOR CRANE SAFETY, SEE SPECIAL PROVISIONS.

FOR GROUT FOR STRUCTURES, SEE SPECIAL PROVISIONS.

INASMUCH AS THE PAINT SYSTEM ON THE EXISTING STRUCTURAL STEEL CONTAINS LEAD, THE CONTRACTOR'S ATTENTION IS DIRECTED TO ARTICLE 107-1 OF THE STANDARD SPECIFICATIONS. ANY COSTS RESULTING FROM COMPLIANCE WITH APPLICABLE STATE OR FEDERAL REGULATIONS PERTAINING TO HANDLING OF MATERIALS CONTAINING LEAD BASED PAINT SHALL BE INCLUDED IN THE BID PRICE FOR "REMOVAL OF EXISTING STRUCTURE AT STATION 14+36.50 -L-."

THE MATERIAL SHOWN IN THE CROSS-HATCHED AREA SHALL BE EXCAVATED FOR A DISTANCE OF 30 FT. EACH SIDE OF CENTERLINE ROADWAY AS DIRECTED BY THE ENGINEER. THIS WORK WILL BE PAID FOR AT THE CONTRACT LUMP SUM PRICE FOR UNCLASSIFIED STRUCTURE EXCAVATION. SEE SECTION 412 OF THE STANDARD SPECIFICATIONS.

THE EXISTING STRUCTURE CONSISTING OF 1 SPAN @ 18'-1" AND 1 SPAN @ 18'-4" WITH A REINFORCED CONCRETE FLOOR ON AN I-BEAM SUPERSTRUCTURE AND A CLEAR ROADWAY WIDTH OF 24.0' ON A SUBSTRUCTURE CONSISTING OF REINFORCED CONCRETE CAPS ON TIMBER PILES AND LOCATED AT THE PROPOSED STRUCTURE LOCATION SHALL BE REMOVED. THE EXISTING BRIDGE IS PRESENTLY POSTED FOR LOAD LIMIT.

THE SUBSTRUCTURE OF THE EXISTING BRIDGE INDICATED ON THE PLANS IS FROM THE BEST INFORMATION AVAILABLE. SINCE THIS INFORMATION IS SHOWN FOR THE CONVENIENCE OF THE CONTRACTOR, THE CONTRACTOR SHALL HAVE NO CLAIM WHATSOEVER AGAINST THE DEPARTMENT OF TRANSPORTATION FOR ANY DELAYS OR ADDITIONAL COST INCURRED BASED ON DIFFERENCE BETWEEN THE EXISTING BRIDGE SUBSTRUCTURE SHOWN ON THE PLANS AND THE ACTUAL CONDITIONS AT THE PROJECT SITE.

REMOVAL OF THE EXISTING BRIDGE SHALL BE PERFORMED SO AS NOT TO ALLOW DEBRIS TO FALL INTO THE WATER. THE CONTRACTOR SHALL REMOVE THE BRIDGE AND SUBMIT PLANS FOR DEMOLITION IN ACCORDANCE WITH ARTICLE 402-2 OF THE STANDARD SPECIFICATIONS.

THIS STRUCTURE HAS BEEN DESIGNED IN ACCORDANCE WITH "HEC 18-EVALUATING SCOUR AT BRIDGES".

FOR INTERIOR BENTS 1 AND 2, ONLY PARTIAL GALVANIZING OF THE PILES IS REQUIRED. SEE INTERIOR BENT SHEETS FOR REQUIRED GALVANIZED LENGTHS. PAYMENT FOR PARTILLY GALVANIZED PILES WILL BE MADE UNDER THE CONTRACT UNIT PRICE FOR GALVANIZED STEEL PILES.

FOR EROSION CONTROL MEASURES, SEE EROSION CONTROL PLANS.

ASPHALT WEARING SURFACE IS INCLUDED IN ROADWAY QUANTITY ON ROADWAY PLANS.

FOR ASBESTOS ASSESSMENT FOR BRIDGE DEMOLITION AND RENOVATION ACTIVITIES, SEE SPECIAL PROVISIONS.

AT THE CONTRACTOR'S OPTION, PRESTRESSED CONCRETE END BENT AND BENT CAPS MAY BE SUBSTITUTED IN PLACE OF THE CAST-IN-PLACE CAPS. THE CONTRACTOR SHALL COORDINATE WITH THE RESIDENT ENGINEER TO RECEIVE REVISED PLANS AND DETAILS FROM THE STRUCTURES MANAGEMENT UNIT. THE REDESIGN AND ANY ADDITIONAL MATERIALS NEEDED WILL BE AT NO ADDITIONAL COST TO THE CONTRACTOR.

TOTAL BILL OF MATERIAL

	REMOVAL OF EXISTING STRUCTURE	PDA TESTING	UNCLASSIFIED STRUCTURE EXCAVATION	CLASS A CONCRETE	BRIDGE APPROACH SLABS	REINFORCING STEEL	PILE DRIVING EQUIPMENT SETUP FOR HP 12X53 STEEL PILES	PILE DRIVING EQUIPMENT SETUP FOR HP 14X73 GALVANIZED STEEL PILES	HP 12 x 53 STEEL PILES		HP 14 x 73 GALVANIZED STEEL PILES		PILE REDRIVES	VERTICAL CONCRETE BARRIER RAIL	RIP RAP CLASS II (2'-0" THICK)	GEOTEXTILE FOR DRAINAGE	ELASTOMERIC BEARINGS	3'-0" X 1'-6" PRESTRESSED CONCRETE CORED SLABS		ASBESTOS ASSESSMENT
	LUMP SUM	EA.	LUMP SUM	CU. YDS.	LUMP SUM	LBS.	EA.	EA.	NO.	LIN. FT.	NO.	LIN. FT.	EA.	LIN. FT.	TONS	SQ. YD.	LUMP SUM	NO.	LIN. FT.	LUMP SUM
SUPERSTRUCTURE														200.75			LUMP SUM	36	1200.00	
END BENT 1				14.9		2263	7		7	287			2		130	140				
BENT 1				11.6		2312		8			8	368	3							
BENT 2				11.6		2312		8			8	408	3							
END BENT 2				14.9		2262	7		7	287			2		55	60				
TOTAL	LUMP SUM	2	LUMP SUM	53.0	LUMP SUM	9149	14	16	14	574	16	776	10	200.75	185	200	LUMP SUM	36	1200.00	LUMP SUM

FOUNDATION NOTES:

FOR PILES, SEE SPECIAL PROVISIONS AND SECTION 450 OF THE STANDARD SPECIFICATIONS.

PILES AT END BENT 1 ARE DESIGNED FOR A FACTORED RESISTANCE OF 55 TONS PER PILE.

DRIVE PILES AT END BENT 1 TO A REQUIRED DRIVING RESISTANCE OF 95 TONS PER PILE.

PILES AT END BENT 2 ARE DESIGNED FOR A FACTORED RESISTANCE OF 60 TONS PER PILE.

DRIVE PILES AT END BENT 2 TO A REQUIRED DRIVING RESISTANCE OF 100 TONS PER PILE.

PILES AT BENT 1 AND BENT 2 ARE DESIGNED FOR A FACTORED RESISTANCE OF 90 TONS PER PILE.

DRIVE PILES AT BENT 1 AND BENT 2 TO A REQUIRED DRIVING RESISTANCE OF 150 TONS.

INSTALL PILES AT BENT 1 TO A TIP ELEVATION NO HIGHER THAN 44.0.

INSTALL PILES AT BENT 2 TO A TIP ELEVATION NO HIGHER THAN 44.0.

THE SCOUR CRITICAL ELEVATION FOR BENT 1 AND BENT 2 IS ELEVATION 63.0. SCOUR CRITICAL ELEVATIONS ARE USED TO MONITOR POSSIBLE SCOUR PROBLEMS DURING THE LIFE OF THE STRUCTURE.

TESTING PILES WITH THE PDA DURING DRIVING, RESTRIKING OR REDRIVING MAYBE REQUIRED. THE ENGINEER WILL DETERMINE THE NEED FOR PDF TESTING. FOR PDA TESTING, SEE SECTION 450 OF THE STANDARD SPECIFICATIONS.

PROJECT NO. 17BP.6.R.69
COLUMBUS COUNTY
STATION: 14+36.50 -L-

SHEET 2 OF 2

ENGINEER OF RECORD

NORTH CAROLINA PROFESSIONAL SEAL 14091 5/11/2017 ENGINEER BUCK CHARLES HUNT

DocuSigned by: Buck Charles Hunt
2F15C83973BA4EC...

WETHERILL ENGINEERING
1223 Jones Franklin Rd.
Raleigh, N.C. 27606
Bus: 919 851 8077
Fax: 919 851 8107
LICENSE NO. F-0377

STATE OF NORTH CAROLINA
DEPARTMENT OF TRANSPORTATION
RALEIGH

GENERAL DRAWING
BRIDGE ON
SR 1003 OVER BIG BRANCH
BETWEEN SR 1546 & NC 131

REVISIONS						SHEET NO.
NO.	BY:	DATE:	NO.	BY:	DATE:	S-2
1			3			TOTAL SHEETS
2			4			23

DRAWN BY : J. PENDERGRAFT DATE : 3-17
CHECKED BY : J. DILWORTH DATE : 4-17

DOCUMENT NOT CONSIDERED FINAL UNLESS ALL SIGNATURES COMPLETED

P:\2016\161101_COLUMBUS_196\Structures\DGN\COLUMBUS 196 GD.dgn
5/10/2017 1:50:00 PM

DocuSign Envelope ID: 8C685FC1-CEF0-4ACA-9D8E-B3E25A2F004A

LOAD AND RESISTANCE FACTOR RATING (LRFR) SUMMARY FOR PRESTRESSED CONCRETE GIRDERS

LEVEL		VEHICLE	WEIGHT (W) (TONS)	CONTROLLING LOAD RATING (#)	MINIMUM RATING FACTORS (RF)	TONS = W × RF	STRENGTH I LIMIT STATE											SERVICE III LIMIT STATE						COMMENT NUMBER
								MOMENT					SHEAR						MOMENT					
							LIVE-LOAD FACTORS $\gamma_{(LL)}$	DISTRIBUTION FACTORS (DF)	RATING FACTOR	SPAN	GIRDER LOCATION	DISTANCE FROM LEFT END OF SPAN (ft)	DISTRIBUTION FACTORS (DF)	RATING FACTOR	SPAN	GIRDER LOCATION	DISTANCE FROM LEFT END OF SPAN (ft)	LIVE-LOAD FACTORS $\gamma_{(LL)}$	DISTRIBUTION FACTORS (DF)	RATING FACTOR	SPAN	GIRDER LOCATION	DISTANCE FROM LEFT END OF SPAN (ft)	
DESIGN LOAD RATING		HL-93 (INVENTORY)	N/A	1	1.59	--	1.75	0.280	1.880	A	EL	14.500	0.570	1.950	A	EL	2.500	0.80	0.280	1.590	A	EL	14.500	
		HL-93 (OPERATING)	N/A		2.44	--	1.35	0.280	2.440	A	EL	14.500	0.570	2.560	A	EL	2.500	N/A	--	--	--	--	--	
		HS-20 (INVENTORY)	36.000	2	2.24	80.640	1.75	0.280	2.610	A	EL	11.500	0.570	2.240	A	EL	2.500	0.80	0.280	2.240	A	EL	11.500	
		HS-20 (OPERATING)	36.000		2.93	105.480	1.35	0.280	3.390	A	EL	11.500	0.570	2.930	A	EL	2.500	N/A	--	--	--	--	--	
LEGAL LOAD RATING	SINGLE VEHICLE (SV)	SNSH	13.500		3.60	48.600	1.40	0.280	5.310	A	EL	14.500	0.570	5.560	A	EL	2.500	0.80	0.280	3.600	A	EL	14.500	
		SNGARBS2	20.000		3.20	64.000	1.40	0.280	4.670	A	EL	11.500	0.570	4.310	A	EL	2.500	0.80	0.280	3.200	A	EL	11.500	
		SNAGRIS2	22.000		3.25	71.500	1.40	0.280	4.750	A	EL	11.500	0.570	4.170	A	EL	2.500	0.80	0.280	3.250	A	EL	11.500	
		SNCOTTS3	27.250		1.81	49.323	1.40	0.280	2.660	A	EL	14.500	0.570	2.750	A	EL	2.500	0.80	0.280	1.810	A	EL	14.500	
		SNAGGRS4	34.925		1.74	60.770	1.40	0.280	2.560	A	EL	14.500	0.570	2.550	A	EL	2.500	0.80	0.280	1.740	A	EL	14.500	
		SNS5A	35.550		1.68	59.724	1.40	0.280	2.480	A	EL	14.500	0.570	2.700	A	EL	2.500	0.80	0.280	1.680	A	EL	14.500	
		SNS6A	39.950		1.59	63.521	1.40	0.280	2.350	A	EL	14.500	0.570	2.490	A	EL	2.500	0.80	0.280	1.590	A	EL	14.500	
		SNS7B	42.000	3	1.55	65.100	1.40	0.280	2.280	A	EL	14.500	0.570	2.540	A	EL	2.500	0.80	0.280	1.550	A	EL	14.500	
	TRUCK TRACTOR SEMI-TRAILER (TTST)	TNAGRIT3	33.000		2.06	67.980	1.40	0.280	3.040	A	EL	14.500	0.570	3.010	A	EL	2.500	0.80	0.280	2.060	A	EL	14.500	
		TNT4A	33.075		1.96	64.827	1.40	0.280	2.890	A	EL	14.500	0.570	2.830	A	EL	2.500	0.80	0.280	1.960	A	EL	14.500	
		TNT6A	41.600		1.78	74.048	1.40	0.280	2.620	A	EL	14.500	0.570	2.710	A	EL	2.500	0.80	0.280	1.780	A	EL	14.500	
		TNT7A	42.000		1.84	77.280	1.40	0.280	2.710	A	EL	14.500	0.570	2.610	A	EL	2.500	0.80	0.280	1.840	A	EL	14.500	
		TNT7B	42.000		1.73	72.660	1.40	0.280	2.550	A	EL	14.500	0.570	2.490	A	EL	2.500	0.80	0.280	1.730	A	EL	14.500	
		TNAGRIT4	43.000		1.79	76.970	1.40	0.280	2.640	A	EL	14.500	0.570	2.470	A	EL	2.500	0.80	0.280	1.790	A	EL	14.500	
		TNAGT5A	45.000		1.74	78.300	1.40	0.280	2.560	A	EL	14.500	0.570	2.650	A	EL	2.500	0.80	0.280	1.740	A	EL	14.500	
		TNAGT5B	45.000		1.70	76.500	1.40	0.280	2.480	A	EL	11.500	0.570	2.310	A	EL	2.500	0.80	0.280	1.700	A	EL	11.500	

LOAD FACTORS:

DESIGN LOAD RATING FACTORS	LIMIT STATE	γ_{DC}	γ_{DW}
	STRENGTH I	1.25	1.50
	SERVICE III	1.00	1.00

NOTES:

MINIMUM RATING FACTORS ARE BASED ON THE STRENGTH I AND SERVICE III LIMIT STATES.

ALLOWABLE STRESSES FOR SERVICE III LIMIT STATE ARE AS REQUIRED FOR DESIGN.

COMMENTS:

1.
2.
3.
4.

(#) CONTROLLING LOAD RATING

(1) DESIGN LOAD RATING (HL-93)

(2) DESIGN LOAD RATING (HS-20)

(3) LEGAL LOAD RATING **

** SEE CHART FOR VEHICLE TYPE

GIRDER LOCATION

I - INTERIOR GIRDER
EL - EXTERIOR LEFT GIRDER
ER - EXTERIOR RIGHT GIRDER

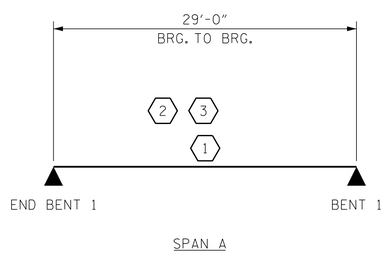

LRFR SUMMARY

PROJECT NO. 17BP.6.R.69
COLUMBUS COUNTY
STATION: 14+36.50 -L-

ENGINEER OF RECORD

NORTH CAROLINA PROFESSIONAL SEAL 14091 5/11/2017 ENGINEER BUCK CHARLES HUNT

DocuSigned by: Buck Charles Hunt 2F15C83073BA4EC...

WETHERILL ENGINEERING
1223 Jones Franklin Rd.
Raleigh, N.C. 27606
Bus: 919 851 8077
Fax: 919 851 8107
LICENSE NO. F-0377

STATE OF NORTH CAROLINA
DEPARTMENT OF TRANSPORTATION
RALEIGH

LRFR SUMMARY FOR PRESTRESSED CONCRETE GIRDERS SPAN A

(NON-INTERSTATE TRAFFIC)

REVISIONS						SHEET NO.
NO.	BY:	DATE:	NO.	BY:	DATE:	S-3
1			3			TOTAL SHEETS
2			4			23

DOCUMENT NOT CONSIDERED FINAL UNLESS ALL SIGNATURES COMPLETED

DRAWN BY : B.C. HUNT DATE : 11-22-16
CHECKED BY : J.A. DILWORTH DATE : 12-13-16

P:\2016\16151.01_COLUMBUS_196\Structures\DGN\COLUMBUS 196 LRFR.dgn
5/10/2017 1:53:39 PM

DocuSign Envelope ID: 8C685FC1-CEF0-4ACA-9D8E-B3E25A2F004A

LOAD AND RESISTANCE FACTOR RATING (LRFR) SUMMARY FOR PRESTRESSED CONCRETE GIRDERS

LEVEL		VEHICLE	WEIGHT (W) (TONS)	CONTROLLING LOAD RATING (#)	MINIMUM RATING FACTORS (RF)	TONS = W × RF	STRENGTH I LIMIT STATE											SERVICE III LIMIT STATE						COMMENT NUMBER
								MOMENT					SHEAR						MOMENT					
							LIVE-LOAD FACTORS $\gamma_{(LL)}$	DISTRIBUTION FACTORS (DF)	RATING FACTOR	SPAN	GIRDER LOCATION	DISTANCE FROM LEFT END OF SPAN (ft)	DISTRIBUTION FACTORS (DF)	RATING FACTOR	SPAN	GIRDER LOCATION	DISTANCE FROM LEFT END OF SPAN (ft)	LIVE-LOAD FACTORS $\gamma_{(LL)}$	DISTRIBUTION FACTORS (DF)	RATING FACTOR	SPAN	GIRDER LOCATION	DISTANCE FROM LEFT END OF SPAN (ft)	
DESIGN LOAD RATING		HL-93 (INVENTORY)	N/A	1	1.33	--	1.75	0.280	1.610	B	EL	17.000	0.560	1.840	B	EL	1.260	0.80	0.280	1.330	B	EL	17.000	
		HL-93 (OPERATING)	N/A		2.08	--	1.35	0.280	2.080	B	EL	17.000	0.560	2.430	B	EL	1.260	N/A	--	--	--	--	--	
		HS-20 (INVENTORY)	36.000	2	1.78	64.080	1.75	0.280	2.120	B	EL	13.500	0.560	2.150	B	EL	1.260	0.80	0.280	1.780	B	EL	13.500	
		HS-20 (OPERATING)	36.000		2.75	99.000	1.35	0.280	2.750	B	EL	13.500	0.560	2.830	B	EL	1.260	N/A	--	--	--	--	--	
LEGAL LOAD RATING	SINGLE VEHICLE (SV)	SNSH	13.500		3.04	41.040	1.40	0.280	4.590	B	EL	17.000	0.560	5.800	B	EL	1.260	0.80	0.280	3.040	B	EL	17.000	
		SNGARBS2	20.000		2.61	52.200	1.40	0.280	3.890	B	EL	13.500	0.560	4.340	B	EL	1.260	0.80	0.280	2.610	B	EL	13.500	
		SNAGRIS2	22.000		2.58	56.760	1.40	0.280	3.850	B	EL	13.500	0.560	4.120	B	EL	1.260	0.80	0.280	2.580	B	EL	13.500	
		SNCOTTS3	27.250		1.52	41.420	1.40	0.280	2.300	B	EL	17.000	0.560	2.850	B	EL	6.500	0.80	0.280	1.520	B	EL	17.000	
		SNAGGRS4	34.925		1.41	49.244	1.40	0.280	2.120	B	EL	17.000	0.560	2.540	B	EL	1.260	0.80	0.280	1.410	B	EL	17.000	
		SNS5A	35.550		1.37	48.704	1.40	0.280	2.060	B	EL	17.000	0.560	2.680	B	EL	1.260	0.80	0.280	1.370	B	EL	17.000	
		SNS6A	39.950		1.32	52.734	1.40	0.280	1.990	B	EL	17.000	0.560	2.510	B	EL	1.260	0.80	0.280	1.320	B	EL	17.000	
		SNS7B	42.000	3	1.26	52.920	1.40	0.280	1.900	B	EL	17.000	0.560	2.570	B	EL	1.260	0.80	0.280	1.260	B	EL	17.000	
	TRUCK TRACTOR SEMI-TRAILER (TTST)	TNAGRIT3	33.000		1.63	53.790	1.40	0.280	2.460	B	EL	17.000	0.560	2.960	B	EL	1.260	0.80	0.280	1.630	B	EL	17.000	
		TNT4A	33.075		1.63	53.912	1.40	0.280	2.460	B	EL	17.000	0.560	2.790	B	EL	1.260	0.80	0.280	1.630	B	EL	17.000	
		TNT6A	41.600		1.43	59.488	1.40	0.280	2.150	B	EL	17.000	0.560	2.730	B	EL	1.260	0.80	0.280	1.430	B	EL	17.000	
		TNT7A	42.000		1.47	61.740	1.40	0.280	2.230	B	EL	17.000	0.560	2.520	B	EL	1.260	0.80	0.280	1.470	B	EL	17.000	
		TNT7B	42.000		1.45	60.900	1.40	0.280	2.190	B	EL	17.000	0.560	2.440	B	EL	1.260	0.80	0.280	1.450	B	EL	17.000	
		TNAGRIT4	43.000		1.47	63.210	1.40	0.280	2.190	B	EL	13.500	0.560	2.330	B	EL	1.260	0.80	0.280	1.470	B	EL	17.000	
		TNAGT5A	45.000		1.35	60.750	1.40	0.280	2.040	B	EL	17.000	0.560	2.470	B	EL	1.260	0.80	0.280	1.350	B	EL	17.000	
		TNAGT5B	45.000		1.30	58.500	1.40	0.280	1.970	B	EL	17.000	0.560	2.200	B	EL	1.260	0.80	0.280	1.300	B	EL	17.000	

LOAD FACTORS:

	LIMIT STATE	γ_{DC}	γ_{DW}
DESIGN LOAD RATING FACTORS	STRENGTH I	1.25	1.50
	SERVICE III	1.00	1.00

NOTES:

MINIMUM RATING FACTORS ARE BASED ON THE STRENGTH I AND SERVICE III LIMIT STATES.

ALLOWABLE STRESSES FOR SERVICE III LIMIT STATE ARE AS REQUIRED FOR DESIGN.

COMMENTS:

1.
2.
3.
4.

(#) CONTROLLING LOAD RATING

(1) DESIGN LOAD RATING (HL-93)

(2) DESIGN LOAD RATING (HS-20)

(3) LEGAL LOAD RATING **

** SEE CHART FOR VEHICLE TYPE

GIRDER LOCATION

I - INTERIOR GIRDER
EL - EXTERIOR LEFT GIRDER
ER - EXTERIOR RIGHT GIRDER

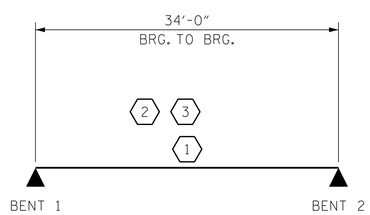

SPAN B

LRFR SUMMARY

SPAN B SHOWN, SPAN C SIMILAR

PROJECT NO. 17BP.6.R.69
COLUMBUS COUNTY
STATION: 14+36.50 -L-

ENGINEER OF RECORD

NORTH CAROLINA PROFESSIONAL SEAL 14091 ENGINEER BUCK CHARLES HUNT 5/11/2017

DocuSigned by: Buck Charles Hunt
2F15C839738A4EC...

WETHERILL ENGINEERING
1223 Jones Franklin Rd.
Raleigh, N.C. 27606
Bus: 919 851 8077
Fax: 919 851 8107
LICENSE NO. F-0377

STATE OF NORTH CAROLINA
DEPARTMENT OF TRANSPORTATION
RALEIGH

LRFR SUMMARY FOR PRESTRESSED CONCRETE GIRDERS SPANS B & C

(NON-INTERSTATE TRAFFIC)

REVISIONS						SHEET NO.
NO.	BY:	DATE:	NO.	BY:	DATE:	S-4
1			3			TOTAL SHEETS
2			4			23

DOCUMENT NOT CONSIDERED FINAL UNLESS ALL SIGNATURES COMPLETED

DRAWN BY : B.C. HUNT DATE : 11-22-16
CHECKED BY : J.A. DILWORTH DATE : 12-13-16

P:\2016\16151.01_COLUMBUS_196\Structures\DGN\COLUMBUS 196 LRFR.dgn
5/10/2017 1:54:24 PM

DocuSign Envelope ID: 8C685FC1-CEF0-4ACA-9D8E-B3E25A2F004A

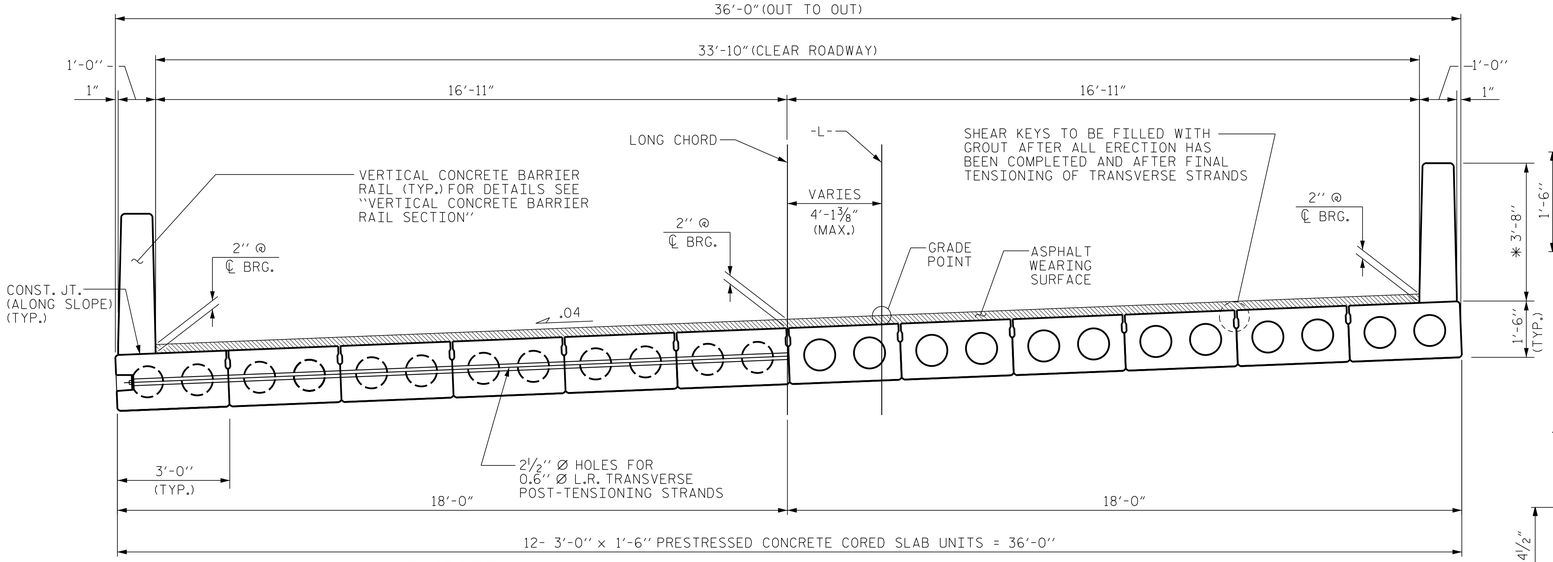

HALF-SECTION
AT INTERMEDIATE DIAPHRAGMS

HALF-SECTION
THRU VOIDS

TYPICAL SECTION

* - THE MAXIMUM BARRIER RAIL HEIGHT AND ASPHALT THICKNESS IS SHOWN. THE HEIGHT OF THE BARRIER RAIL AND ASPHALT THICKNESS VARIES WHILE THE TOP OF THE BARRIER RAIL FOLLOWS THE PROFILE OF THE GUTTERLINE. FOR RAIL HEIGHT DETAILS AND ASPHALT THICKNESS SEE THE "VERTICAL CONCRETE BARRIER RAIL SECTION" DETAIL.

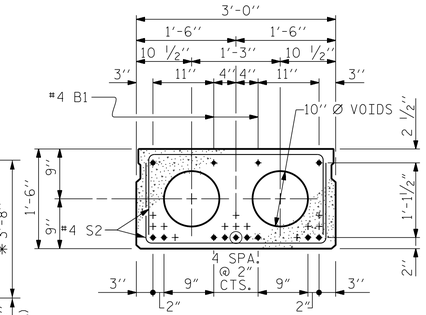

INTERIOR SLAB SECTION -
30'-0" SPAN A
(10 STRANDS REQUIRED)

0.6" Ø LOW RELAXATION STRAND LAYOUT

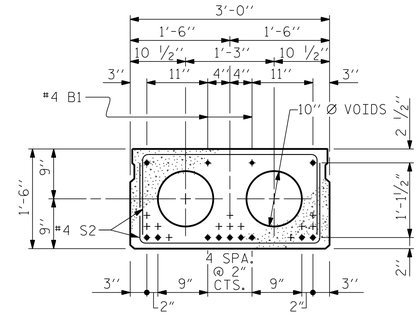

INTERIOR SLAB SECTION -
35'-0" SPAN B & C
(11 STRANDS REQUIRED)

0.6" Ø LOW RELAXATION STRAND LAYOUT

◉ OPTIONAL FULL LENGTH DEBONDED STRANDS. THESE STRANDS ARE NOT REQUIRED. IF THE FABRICATOR CHOOSES TO INCLUDE THESE STRANDS IN THE CORED SLAB UNIT, THE STRANDS SHALL BE DEBONDED FOR THE FULL LENGTH OF THE UNIT AT NO ADDITIONAL COST. SEE STANDARD SPECIFICATIONS, ARTICLE 1078-7.

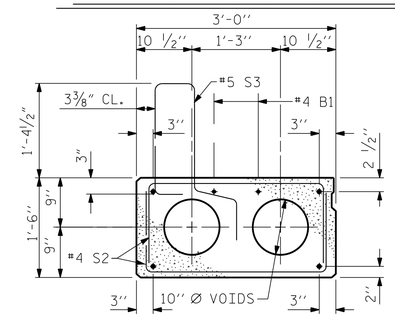

EXTERIOR SLAB SECTION
(FOR PRESTRESSED STRAND LAYOUT, SEE INTERIOR SLAB SECTION)

PERMITTED THREADED INSERT CAST IN OUTSIDE FACE OF EXTERIOR UNIT AND RECESSED 3/8". SIZE TO BE DETERMINED BY CONTRACTOR.

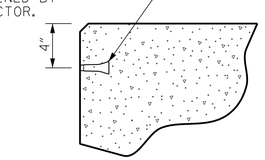

THREADED INSERT DETAIL

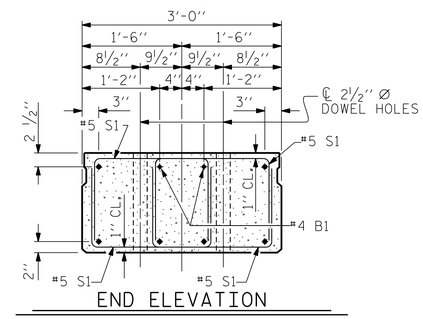

END ELEVATION
SHOWING PLACEMENT OF DOUBLE STIRRUPS AND LOCATION OF DOWEL HOLES (STRAND LAYOUT NOT SHOWN)
INTERIOR SLAB SECTION SHOWN-EXTERIOR SLAB SECTION SIMILAR EXCEPT SHEAR KEY LOCATION.

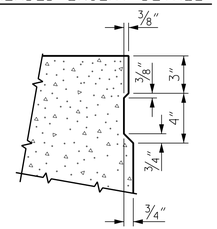

SHEAR KEY DETAIL

NOTE: OMIT SHEAR KEY ON OUTSIDE FACE OF EXTERIOR CORED SLABS.

FIXED END

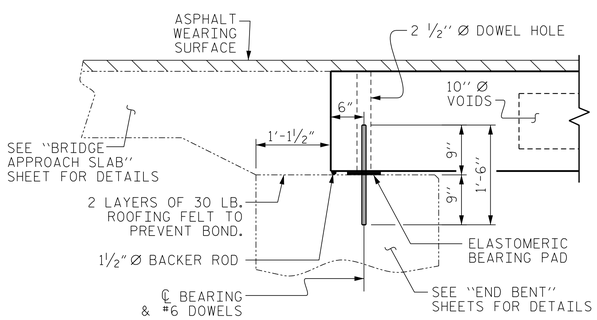

SECTION AT END BENT

FIXED END FIXED END

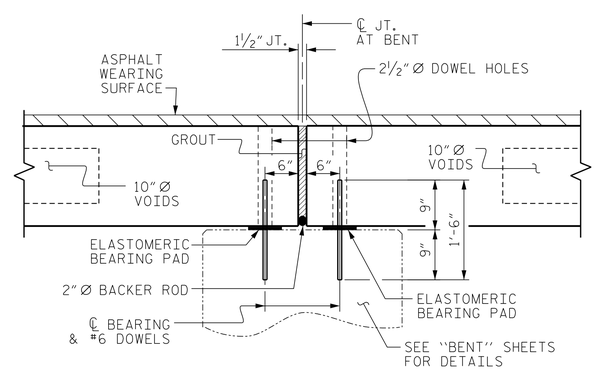

SECTION AT BENT

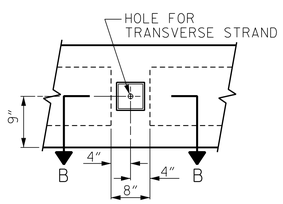

ELEVATION VIEW

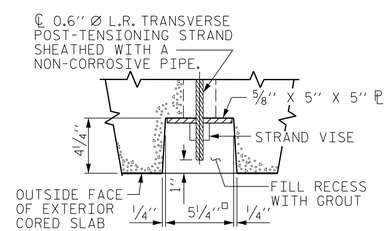

SECTION B-B

GROUTED RECESS AT END OF POST-TENSIONED STRAND OF CORED SLABS

PROJECT NO. 17BP.6.R.69
COLUMBUS COUNTY
STATION: 14+36.50 -L-

SHEET 1 OF 5

ENGINEER OF RECORD
NORTH CAROLINA PROFESSIONAL SEAL 14091 ENGINEER BUCK CHARLES HUNT 5/11/2017
DocuSigned by: Buck Charles Hunt
2F15C83073BA4EC...

WETHERILL ENGINEERING
1223 Jones Franklin Rd.
Raleigh, N.C. 27606
Bus: 919 851 8077
Fax: 919 851 8107
LICENSE NO. F-0377

STATE OF NORTH CAROLINA
DEPARTMENT OF TRANSPORTATION
RALEIGH

3'-0" X 1'-6"
PRESTRESSED CONCRETE
CORED SLAB UNIT
90° SKEW

REVISIONS						SHEET NO.
NO.	BY:	DATE:	NO.	BY:	DATE:	S-5
1			3			TOTAL SHEETS
2			4			23

DOCUMENT NOT CONSIDERED FINAL UNLESS ALL SIGNATURES COMPLETED

DRAWN BY : J. PENDERGRAFT DATE : 11-16
CHECKED BY : B.C. HUNT DATE : 11-16

P:\2016\16151.01_COLUMBUS_196\Structures\DGN\COLUMBUS 196 TS.dgn
5/10/2017 1:55:52 PM

STD. NO. 21" PCS2_36_90S

DocuSign Envelope ID: 8C685FC1-CEF0-4ACA-9D8E-B3E25A2F004A

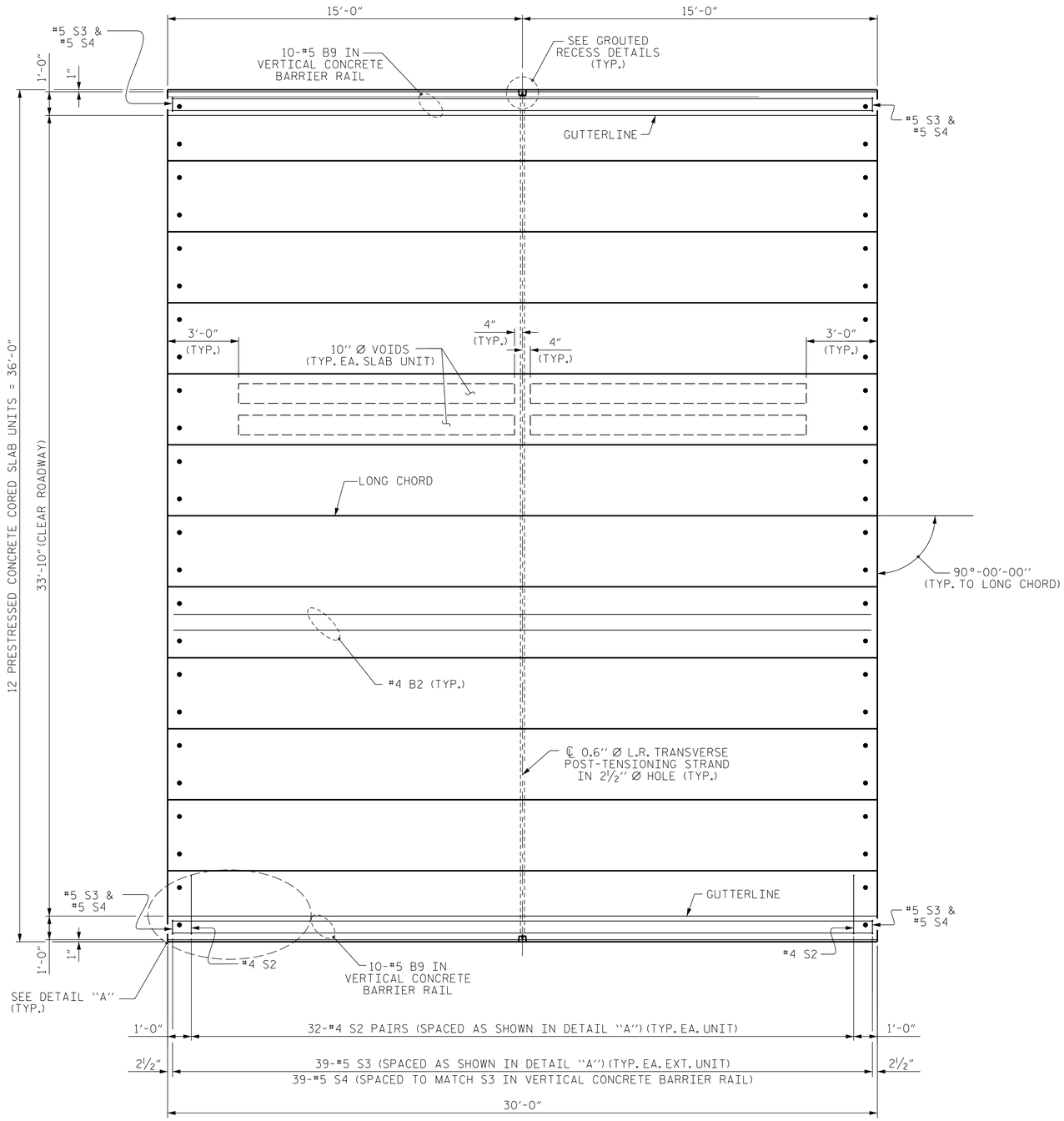

PLAN OF UNIT

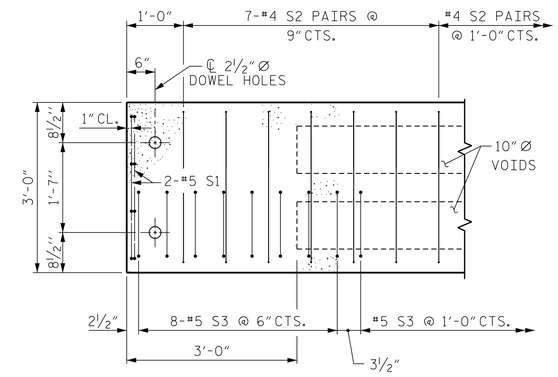

DETAIL "A"

(TYPICAL EACH END OF UNIT)
NOTE: EXTERIOR UNIT SHOWN - INTERIOR UNIT SIMILAR EXCEPT OMIT #5 S3 BARS.

PROJECT NO. 17BP.6.R.69
COLUMBUS COUNTY
STATION: 14+36.50 -L-

SHEET 2 OF 5

ENGINEER OF RECORD

NORTH CAROLINA PROFESSIONAL SEAL 409 5/11/2017 ENGINEER BUCK CHARLES HUNT

DocuSigned by: Buck Charles Hunt
2F15C83973BA4EC...

WETHERILL ENGINEERING
1223 Jones Franklin Rd.
Raleigh, N.C. 27606
Bus: 919 851 8077
Fax: 919 851 8107
LICENSE NO. F-0377

STATE OF NORTH CAROLINA
DEPARTMENT OF TRANSPORTATION
RALEIGH

PLAN OF 30' UNIT
33'-10" CLEAR ROADWAY
90° SKEW
SPAN A

REVISIONS						SHEET NO.
NO.	BY:	DATE:	NO.	BY:	DATE:	S-6
1			3			TOTAL SHEETS
2			4			23

DRAWN BY : J. PENDERGRAFT DATE : 11-16
CHECKED BY : B.C. HUNT DATE : 11-16

DOCUMENT NOT CONSIDERED FINAL UNLESS ALL SIGNATURES COMPLETED

P:\2016\16151.01_COLUMBUS_196\Structures\DGN\COLUMBUS 196 PS.dgn
5/10/2017 2:05:20 PM

DocuSign Envelope ID: 8C685FC1-CEF0-4ACA-9D8E-B3E25A2F004A

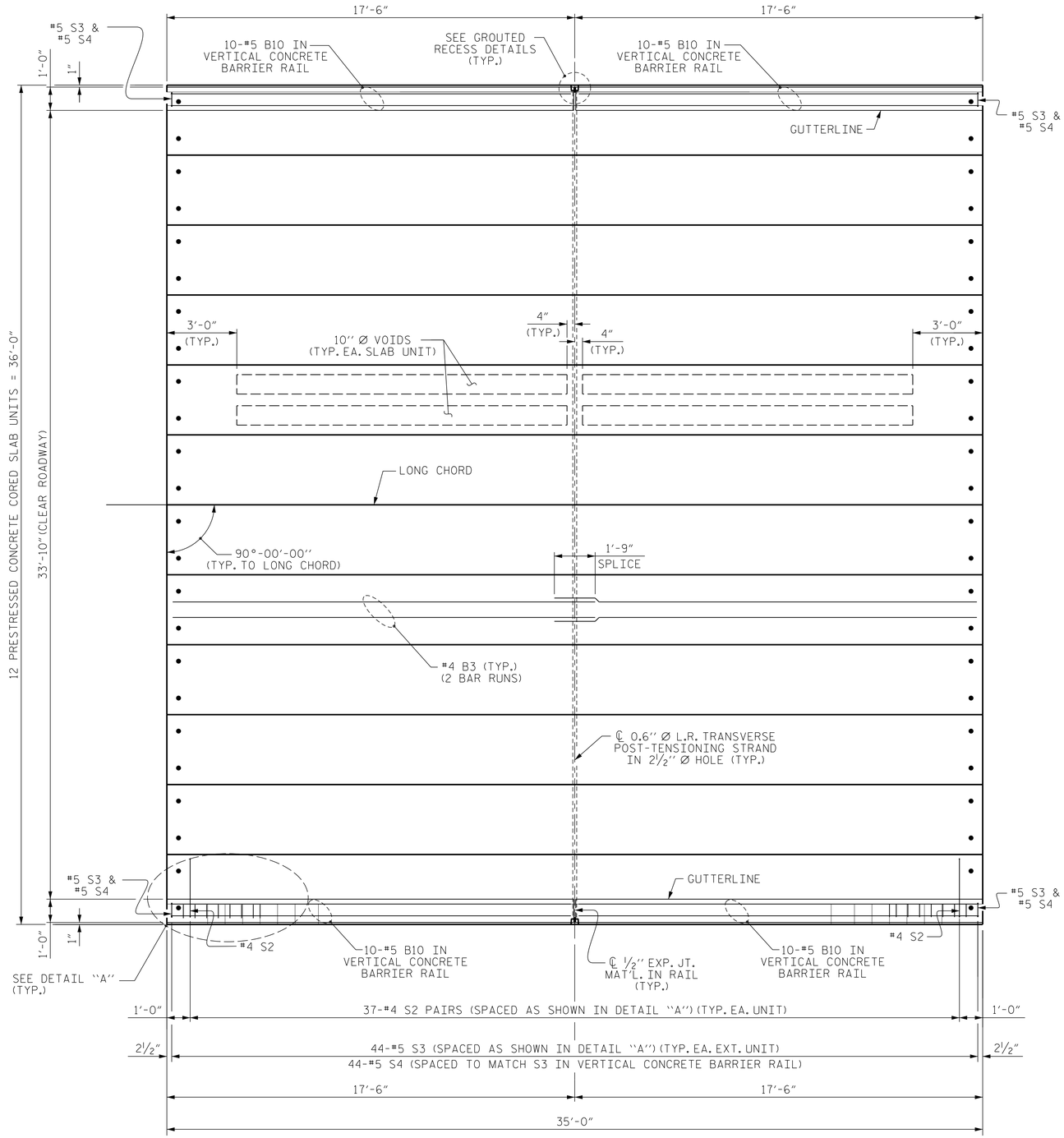

PLAN OF UNIT

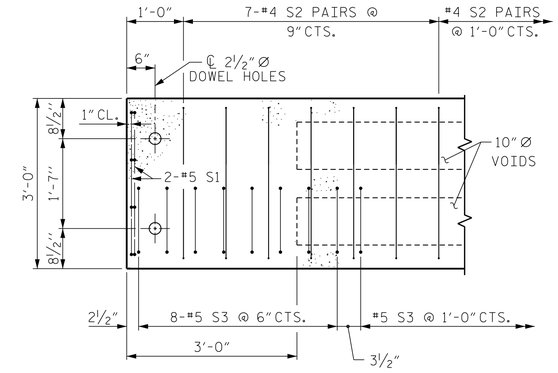

DETAIL "A"

(TYPICAL EACH END OF UNIT)
NOTE: EXTERIOR UNIT SHOWN - INTERIOR UNIT SIMILAR EXCEPT OMIT #5 S3 BARS.

PROJECT NO. 17BP.6.R.69
COLUMBUS COUNTY
STATION: 14+36.50 -L-

SHEET 3 OF 5

ENGINEER OF RECORD

NORTH CAROLINA PROFESSIONAL SEAL 14091 5/11/2017 ENGINEER BUCK CHARLES HUNT

DocuSigned by: Buck Charles Hunt 2F15C83973BA4EC...

WETHERILL ENGINEERING
1223 Jones Franklin Rd.
Raleigh, N.C. 27606
Bus: 919 851 8077
Fax: 919 851 8107
LICENSE NO. F-0377

STATE OF NORTH CAROLINA
DEPARTMENT OF TRANSPORTATION
RALEIGH

PLAN OF 35' UNIT
33'-10" CLEAR ROADWAY
90° SKEW
SPAN B & C

REVISIONS						SHEET NO.
NO.	BY:	DATE:	NO.	BY:	DATE:	S-7
1			3			TOTAL SHEETS
2			4			23

DOCUMENT NOT CONSIDERED FINAL UNLESS ALL SIGNATURES COMPLETED

DRAWN BY : J. PENDERGRAFT DATE : 11-16
CHECKED BY : B.C. HUNT DATE : 11-16

P:\2016\16151.01_COLUMBUS_196\Structures\DGN\COLUMBUS 196 PS.dgn
5/10/2017 2:06:00 PM

DocuSign Envelope ID: 8C685FC1-CEF0-4ACA-9D8E-B3E25A2F004A

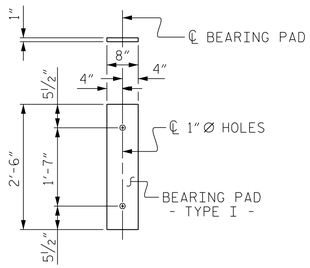

FIXED END
(TYPE I - 72 REQ'D)

ELASTOMERIC BEARING DETAILS

ELASTOMER IN ALL BEARINGS SHALL BE 50 DUROMETER HARDNESS.

BAR TYPES

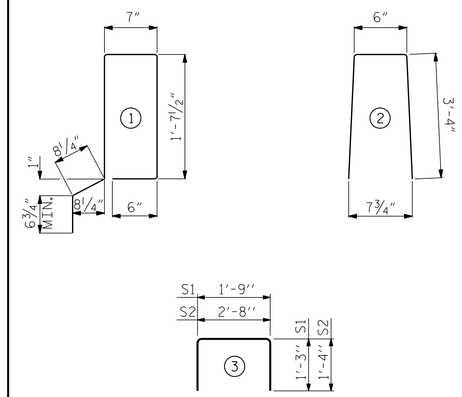

ALL BAR DIMENSIONS ARE OUT TO OUT

CONCRETE RELEASE STRENGTH	
UNIT	PSI
30' & 35' UNITS	4000

GRADE 270 STRANDS	
	0.6" Ø L.R.
AREA (SQUARE INCHES)	0.217
ULTIMATE STRENGTH (LBS. PER STRAND)	58,600
APPLIED PRESTRESS (LBS. PER STRAND)	43,950

NOTES

ALL PRESTRESSING STRANDS SHALL BE 7-WIRE LOW RELAXATION GRADE 270 STRANDS AND SHALL CONFORM TO AASHTO M203 EXCEPT FOR SAMPLING REQUIREMENTS WHICH SHALL BE IN ACCORDANCE WITH THE STANDARD SPECIFICATIONS.

ALL REINFORCING STEEL CAST WITH THE CORED SLAB SECTIONS SHALL BE GRADE 60 AND SHALL BE INCLUDED IN THE UNIT PRICE BID FOR PRESTRESSED CONCRETE CORED SLABS.

RECESSES FOR TRANSVERSE STRANDS SHALL BE GROUTED AFTER THE TENSIONING OF THE STRANDS.

THE 2½" Ø DOWEL HOLES AT FIXED ENDS OF SLAB SECTIONS SHALL BE FILLED WITH NON-SHRINK GROUT.

THE BACKER RODS SHALL CONFORM TO THE REQUIREMENTS OF TYPE M BOND BREAKER. SEE SECTION 1028 OF THE STANDARD SPECIFICATIONS.

WHEN CORED SLABS ARE CAST, AN INTERNAL HOLD-DOWN SYSTEM SHALL BE EMPLOYED TO PREVENT VOIDS FROM RISING OR MOVING SIDEWAYS. AT LEAST SIX WEEKS PRIOR TO CASTING CORED SLABS, THE CONTRACTOR SHALL SUBMIT TO THE ENGINEER FOR REVIEW AND COMMENT, DETAILED DRAWINGS OF THE PROPOSED HOLD-DOWN SYSTEM. IN ADDITION TO STRUCTURAL DETAILS, LOCATION AND SPACING OF THE HOLD-DOWNS SHALL BE INDICATED.

ALL REINFORCING STEEL IN THE VERTICAL CONCRETE BARRIER RAIL SHALL BE EPOXY COATED.

PRESTRESSING STRANDS SHALL BE CUT FLUSH WITH THE CORED SLAB UNIT ENDS.

APPLY EPOXY PROTECTIVE COATING TO CORED SLAB UNIT ENDS.

GROOVED CONTRACTION JOINTS, ½" IN DEPTH, SHALL BE TOOLED IN ALL EXPOSED FACES OF THE BARRIER RAIL AND IN ACCORDANCE WITH ARTICLE 825-10(B) OF THE STANDARD SPECIFICATIONS. A CONTRACTION JOINT SHALL BE LOCATED AT EACH THIRD POINT BETWEEN BARRIER RAIL EXPANSION JOINTS. ONLY ONE CONTRACTION JOINT IS REQUIRED AT MIDPOINT OF BARRIER RAIL SEGMENTS LESS THAN 20 FEET IN LENGTH AND NO CONTRACTION JOINTS ARE REQUIRED FOR THOSE SEGMENTS LESS THAN 10 FEET IN LENGTH.

FLAME CUTTING OF THE TRANSVERSE POST-TENSIONING STRAND IS NOT ALLOWED.

THE TRANSFER OF LOAD FROM THE ANCHORAGES TO THE CORED SLAB UNIT SHALL BE DONE WHEN THE CONCRETE HAS REACHED A COMPRESSIVE STRENGTH OF NOT LESS THAN THE REQUIRED STRENGTH SHOWN IN THE "CONCRETE RELEASE STRENGTH" TABLE.

FOR GROUT FOR STRUCTURES, SEE SPECIAL PROVISIONS.

THE PERMITTED THREADED INSERTS ARE DETAILED AS AN OPTION FOR THE CONTRACTOR TO ATTACH FALSEWORK AND FORMWORK DURING CONSTRUCTION.

THE PERMITTED THREADED INSERTS IN THE EXTERIOR UNITS SHALL BE SIZED BY THE CONTRACTOR, SPACED AT 4'-0" CENTERS AND GALVANIZED IN ACCORDANCE WITH SECTION 1076 OF THE STANDARD SPECIFICATIONS. STAINLESS STEEL THREADED INSERTS MAY BE USED AS AN ALTERNATE.

THE PERMITTED THREADED INSERTS SHALL BE GROUTED BY THE CONTRACTOR IMMEDIATELY FOLLOWING REMOVAL OF THE FALSEWORK.

THE COST OF THE PERMITTED THREADED INSERTS SHALL BE INCLUDED IN THE PRICE BID FOR THE PRECAST UNITS.

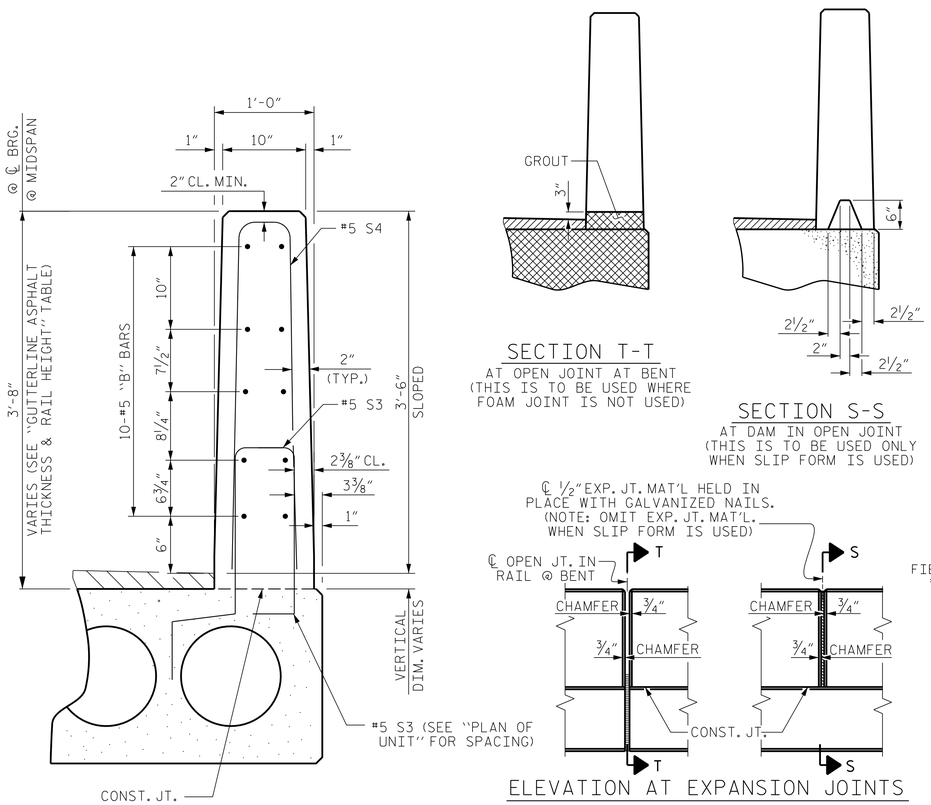

SECTION T-T
AT OPEN JOINT AT BENT
(THIS IS TO BE USED WHERE FOAM JOINT IS NOT USED)

SECTION S-S
AT DAM IN OPEN JOINT
(THIS IS TO BE USED ONLY WHEN SLIP FORM IS USED)

ELEVATION AT EXPANSION JOINTS

VERTICAL CONCRETE BARRIER RAIL SECTION

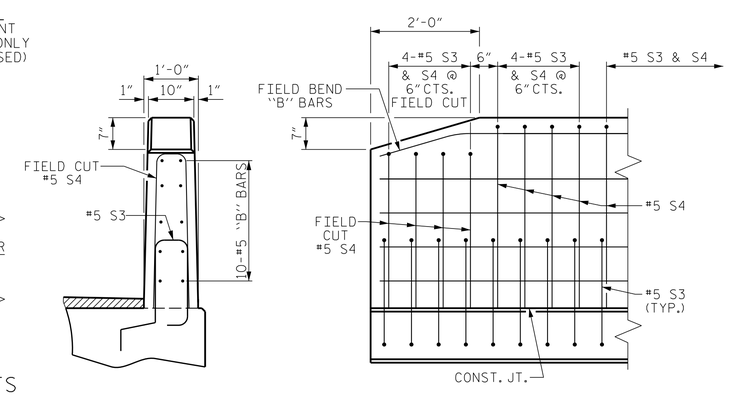

END VIEW

SIDE VIEW

END OF RAIL DETAILS

PROJECT NO. 17BP.6.R.69
COLUMBUS COUNTY
STATION: 14+36.50 -L-

SHEET 4 OF 5

ENGINEER OF RECORD

NORTH CAROLINA PROFESSIONAL SEAL 14091 ENGINEER BUCK CHARLES HUNT 5/11/2017

DocuSigned by: Buck Charles Hunt
2F15C83973BA4EC...

WETHERILL ENGINEERING
1223 Jones Franklin Rd.
Raleigh, N.C. 27606
Bus: 919 851 8077
Fax: 919 851 8107
LICENSE NO. F-0377

STATE OF NORTH CAROLINA
DEPARTMENT OF TRANSPORTATION
RALEIGH

3'-0" X 1'-6" PRESTRESSED CONCRETE CORED SLAB UNIT 90° SKEW

REVISIONS						
NO.	BY:	DATE:	NO.	BY:	DATE:	
1			3			
2			4			

SHEET NO. S-8
TOTAL SHEETS 23

DRAWN BY : J. PENDERGRAFT DATE : 11-16
CHECKED BY : B.C. HUNT DATE : 11-16

DOCUMENT NOT CONSIDERED FINAL UNLESS ALL SIGNATURES COMPLETED

P:\2016\16151.01_COLUMBUS_196\Structures\DGN\COLUMBUS 196 CS.dgn
5/10/2017 2:07:45 PM

DocuSign Envelope ID: 8C685FC1-CEF0-4ACA-9D8E-B3E25A2F004A

CORED SLABS REQUIRED

	NUMBER	LENGTH	TOTAL LENGTH
30' UNIT			
EXTERIOR C.S.	2	30'-0"	60'-0"
INTERIOR C.S.	10	30'-0"	300'-0"
TOTAL	12		360'-0"

CORED SLABS REQUIRED

	NUMBER	LENGTH	TOTAL LENGTH
35' UNIT			
EXTERIOR C.S.	4	35'-0"	140'-0"
INTERIOR C.S.	20	35'-0"	700'-0"
TOTAL	24		840'-0"

BILL OF MATERIAL FOR VERTICAL CONCRETE BARRIER RAIL

BAR	BARS PER PAIR OF EXTERIOR UNITS	TOTAL NO.	SIZE	TYPE	LENGTH	WEIGHT
	30' UNIT					
* B9	20	20	#5	STR	29'-7"	617
* S4	78	78	#5	2	7'-2"	583
* EPOXY COATED REINFORCING STEEL				LBS.		1200
CLASS AA CONCRETE				CU.YDS.		7.7
TOTAL VERTICAL CONCRETE BARRIER RAIL				LN. FT.		60.25

BILL OF MATERIAL FOR VERTICAL CONCRETE BARRIER RAIL

BAR	BARS PER PAIR OF EXTERIOR UNITS	TOTAL NO.	SIZE	TYPE	LENGTH	WEIGHT
	35' UNIT					
*B10	40	80	#5	STR	17'-1"	1425
* S4	88	176	#5	2	7'-2"	1316
* EPOXY COATED REINFORCING STEEL				LBS.		2741
CLASS AA CONCRETE				CU.YDS.		18.0
TOTAL VERTICAL CONCRETE BARRIER RAIL				LN. FT.		140.50

GUTTERLINE ASPHALT THICKNESS & RAIL HEIGHT

	ASPHALT OVERLAY THICKNESS	RAIL HEIGHT
	@ MID-SPAN	@ MID-SPAN
30' & 35' UNITS	1½"	3'-7½"

DEAD LOAD DEFLECTION AND CAMBER

	3'-0" x 1'-6"
30' CORED SLAB UNIT	0.6" Ø L.R. STRAND
CAMBER (SLAB ALONE IN PLACE)	7/16" ↑
DEFLECTION DUE TO SUPERIMPOSED DEAD LOAD**	1/16" ↓
FINAL CAMBER	3/8" ↑

** INCLUDES FUTURE WEARING SURFACE

DEAD LOAD DEFLECTION AND CAMBER

	3'-0" x 1'-6"
35' CORED SLAB UNIT	0.6" Ø L.R. STRAND
CAMBER (SLAB ALONE IN PLACE)	11/16" ↑
DEFLECTION DUE TO SUPERIMPOSED DEAD LOAD**	1/8" ↓
FINAL CAMBER	9/16" ↑

** INCLUDES FUTURE WEARING SURFACE

BILL OF MATERIAL FOR ONE 30' CORED SLAB UNIT

				EXTERIOR UNIT		INTERIOR UNIT	
BAR	NUMBER	SIZE	TYPE	LENGTH	WEIGHT	LENGTH	WEIGHT
B2	2	#4	STR	29'-8"	40	29'-8"	40
S1	8	#5	3	4'-3"	35	4'-3"	35
S2	64	#4	3	5'-4"	228	5'-4"	228
* S3	39	#5	1	5'-7"	227		
REINFORCING STEEL			LBS.		303		303
* EPOXY COATED REINFORCING STEEL			LBS.		227		
5000 P.S.I. CONCRETE			CU. YDS.		4.0		4.0
0.6" Ø L.R. STRANDS			No.		10		10

BILL OF MATERIAL FOR ONE 35' CORED SLAB UNIT

				EXTERIOR UNIT		INTERIOR UNIT	
BAR	NUMBER	SIZE	TYPE	LENGTH	WEIGHT	LENGTH	WEIGHT
B3	4	#4	STR	18'-3"	49	18'-3"	49
S1	8	#5	3	4'-3"	35	4'-3"	35
S2	74	#4	3	5'-4"	264	5'-4"	264
* S3	44	#5	1	5'-7"	256		
REINFORCING STEEL			LBS.		348		348
* EPOXY COATED REINFORCING STEEL			LBS.		256		
5000 P.S.I. CONCRETE			CU. YDS.		4.6		4.6
0.6" Ø L.R. STRANDS			No.		11		11

PROJECT NO. 17BP.6.R.69

COLUMBUS COUNTY

STATION: 14+36.50 -L-

SHEET 5 OF 5

ENGINEER OF RECORD

NORTH CAROLINA PROFESSIONAL SEAL 14091 5/11/2017 ENGINEER BUCK CHARLES HUNT

DocuSigned by: Buck Charles Hunt
2F15C8387364AEC...

WETHERILL ENGINEERING
1223 Jones Franklin Rd.
Raleigh, N.C. 27606
Bus: 919 851 8077
Fax: 919 851 8107
LICENSE NO. F-0377

STATE OF NORTH CAROLINA
DEPARTMENT OF TRANSPORTATION
RALEIGH

3'-0" X 1'-6"
PRESTRESSED CONCRETE
CORED SLAB UNIT
90° SKEW

REVISIONS						SHEET NO.
NO.	BY:	DATE:	NO.	BY:	DATE:	S-9
1			3			TOTAL SHEETS
2			4			23

DOCUMENT NOT CONSIDERED FINAL UNLESS ALL SIGNATURES COMPLETED

DRAWN BY : J. PENDERGRAFT DATE : 11-16
CHECKED BY : B.C. HUNT DATE : 11-16

P:\2016\16151.01_COLUMBUS_196\Structures\DGN\COLUMBUS 196 CS.dgn
5/10/2017 2:08:39 PM

DocuSign Envelope ID: 8C685FC1-CEF0-4ACA-9D8E-B3E25A2F004A

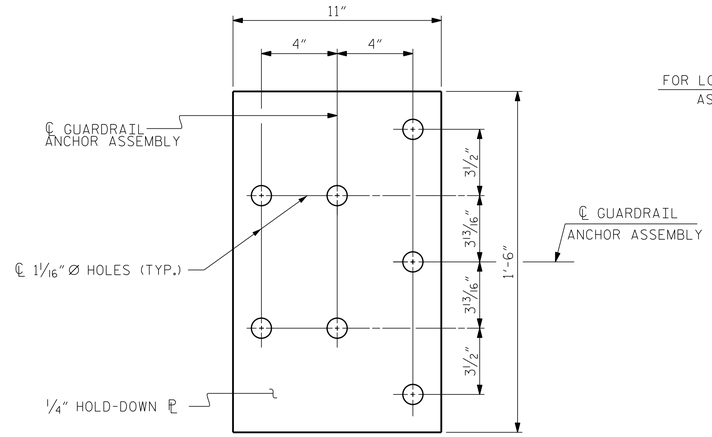

PLAN

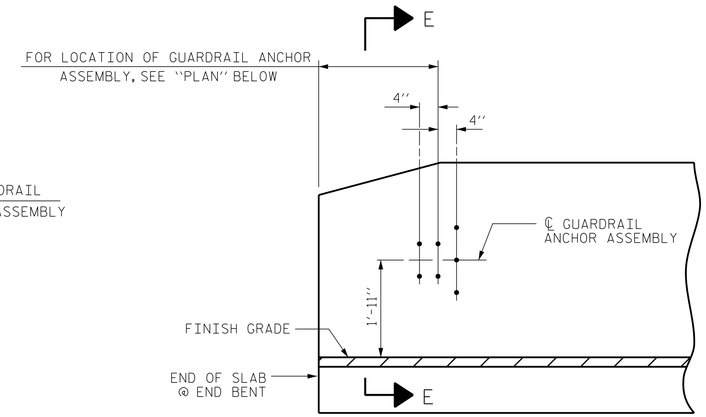

ELEVATION

NOTES

THE GUARDRAIL ANCHOR ASSEMBLY SHALL CONSIST OF A 1/4" HOLD DOWN PLATE AND 7 - 7/8" Ø BOLTS WITH NUTS AND WASHERS.

THE HOLD-DOWN PLATE SHALL CONFORM TO AASHTO M270 GRADE 36. AFTER FABRICATION, THE HOLD-DOWN PLATE SHALL BE HOT-DIP GALVANIZED IN ACCORDANCE WITH AASHTO M111.

BOLTS SHALL CONFORM TO THE REQUIREMENTS OF ASTM A307 AND NUTS SHALL CONFORM TO THE REQUIREMENTS OF AASHTO M291. BOLTS, NUTS AND WASHERS SHALL BE GALVANIZED. (AT THE CONTRACTOR'S OPTION, STAINLESS STEEL BOLTS, NUTS AND WASHERS MAY BE USED AS AN ALTERNATE FOR THE 7/8" Ø GALVANIZED BOLTS, NUTS AND WASHERS. THEY SHALL CONFORM TO OR EXCEED THE MECHANICAL REQUIREMENTS OF ASTM A307. THE USE OF THIS ALTERNATE SHALL BE APPROVED BY THE ENGINEER.)

THE GUARDRAIL ANCHOR ASSEMBLY IS REQUIRED AT ALL POINTS WHERE APPROACH GUARDRAIL IS TO BE ATTACHED TO THE END OF BARRIER RAIL. FOR POINTS OF ATTACHMENT, SEE SKETCH.

AFTER INSTALLATION, THE EXPOSED THREAD OF THE BOLT SHALL BE BURRED WITH A SHARP POINTED TOOL.

THE COST OF THE GUARDRAIL ANCHOR ASSEMBLY SHALL BE INCLUDED IN THE UNIT CONTRACT PRICE BID FOR VERTICAL CONCRETE BARRIER RAIL.

THE VERTICAL REINFORCING BARS MAY BE SHIFTED SLIGHTLY IN THE VERTICAL CONCRETE BARRIER RAIL TO CLEAR ASSEMBLY BOLTS.

THE 1 1/4" Ø HOLES SHALL BE FORMED OR DRILLED WITH A CORE BIT. IMPACT TOOLS WILL NOT BE PERMITTED. ANY CONCRETE DAMAGED BY THIS WORK SHALL BE REPAIRED TO THE SATISFACTION OF THE ENGINEER.

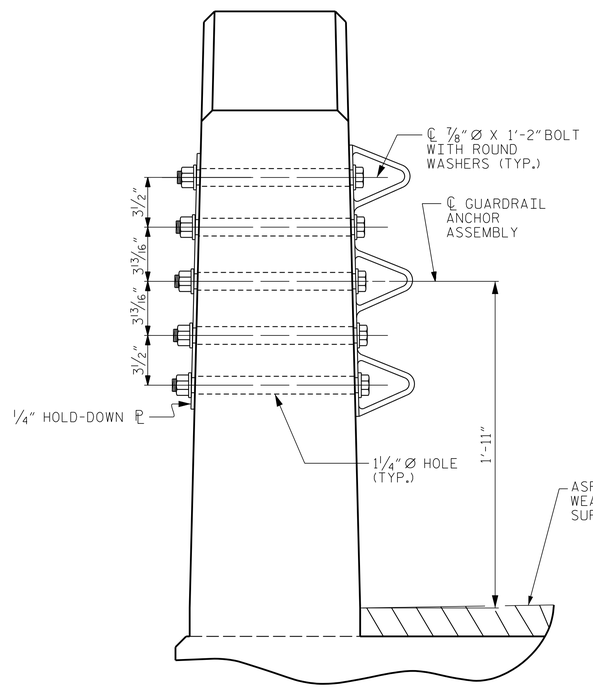

SECTION E-E

GUARDRAIL ANCHOR ASSEMBLY DETAILS

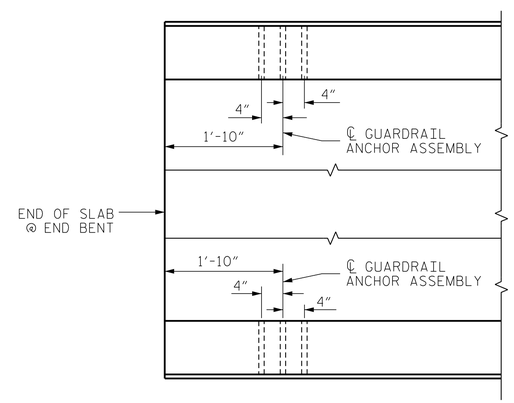

PLAN

LOCATION OF ANCHORS FOR GUARDRAIL

END BENT #1 SHOWN, END BENT #2 SIMILAR.

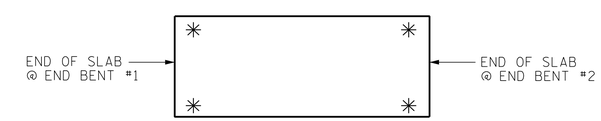

SKETCH SHOWING POINTS OF ATTACHMENT

✳ DENOTES GUARDRAIL ANCHOR ASSEMBLY

PROJECT NO. 17BP.6.R.69

COLUMBUS COUNTY

STATION: 14+36.50 -L-

ENGINEER OF RECORD

NORTH CAROLINA PROFESSIONAL SEAL 14091 5/11/2017 ENGINEER BUCK CHARLES HUNT

DocuSigned by: Buck Charles Hunt
2F15C8597B8A4EC...

WETHERILL ENGINEERING
1223 Jones Franklin Rd.
Raleigh, N.C. 27606
Bus: 919 851 8077
Fax: 919 851 8107
LICENSE NO. F-0377

STATE OF NORTH CAROLINA
DEPARTMENT OF TRANSPORTATION
RALEIGH

STANDARD
GUARDRAIL ANCHORAGE DETAILS
FOR VERTICAL CONCRETE BARRIER RAIL

REVISIONS						SHEET NO.
NO.	BY:	DATE:	NO.	BY:	DATE:	S-10
1			3			TOTAL SHEETS
2			4			23

DOCUMENT NOT CONSIDERED FINAL UNLESS ALL SIGNATURES COMPLETED

DRAWN BY :	J. PENDERGRAFT	DATE :	11-16
CHECKED BY :	B.C. HUNT	DATE :	11-16

P:\2016\161510 1_COLUMBUS_196\Structures\DGN\COLUMBUS 196 GRA.dgn
5/10/2017 2:11:40 PM

(SHT 1) STD. NO. GRA3

DocuSign Envelope ID: 8C685FC1-CEF0-4ACA-9D8E-B3E25A2F004A

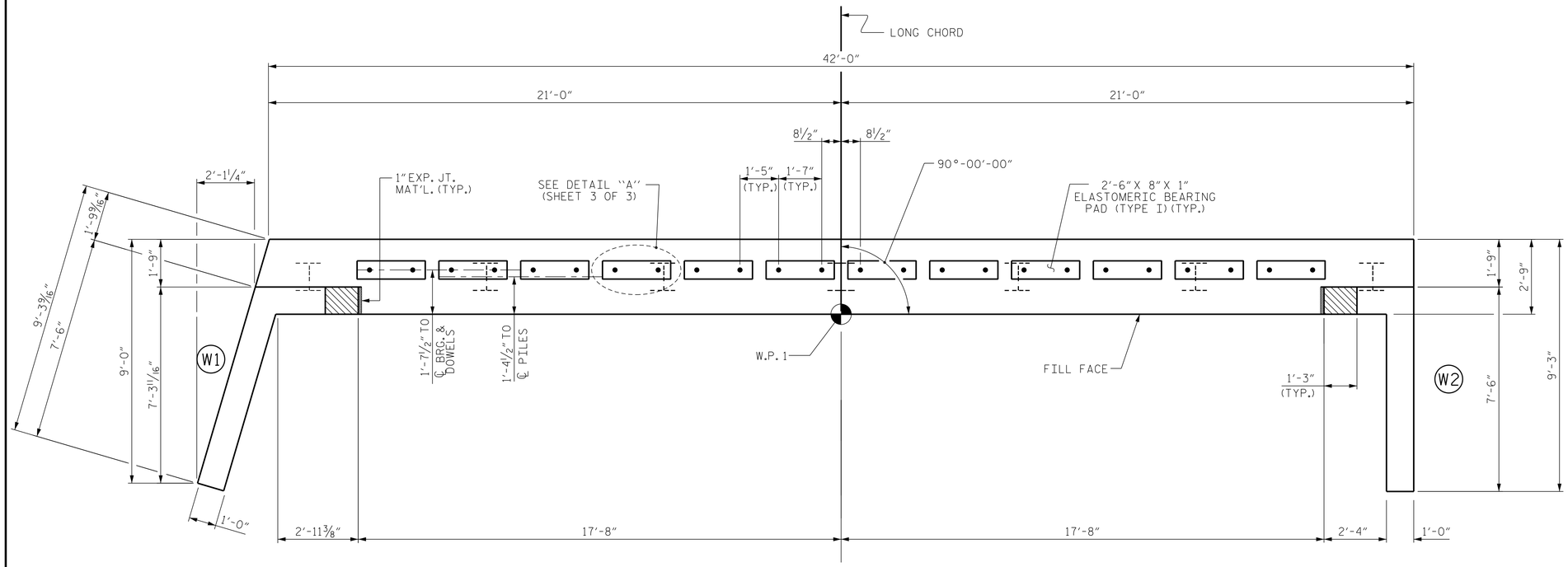

PLAN

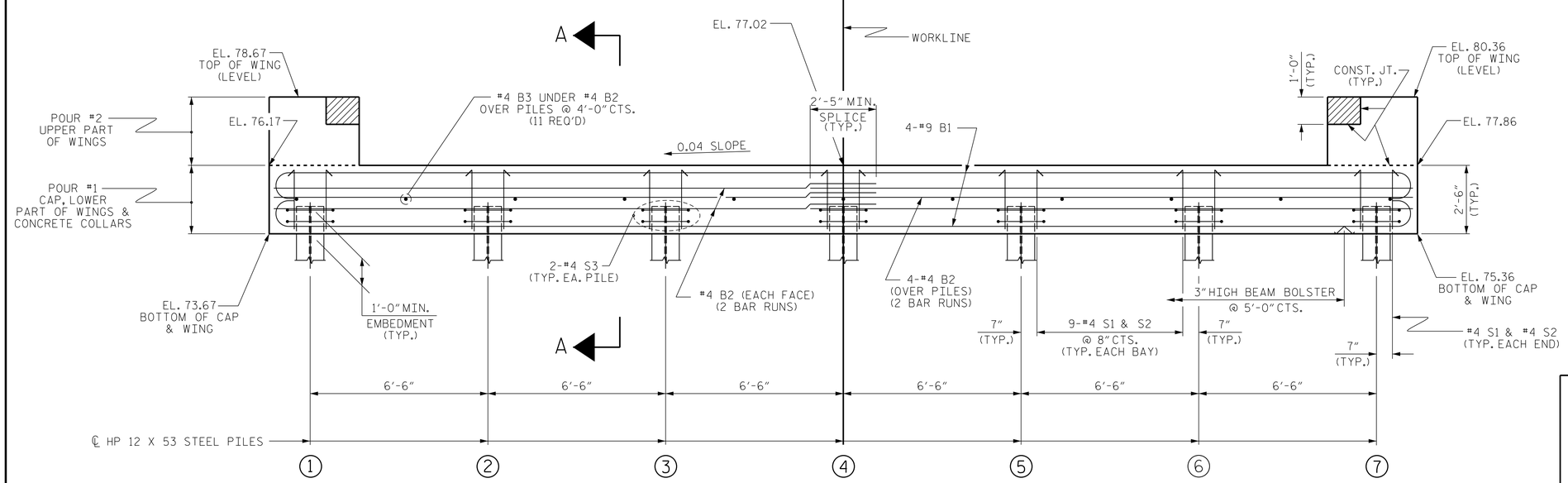

ELEVATION

WINGS NOT SHOWN FOR CLARITY.
FOR SECTION A-A, SEE SHEET 3 OF 3.
CONCRETE COLLARS FOR STEEL PILES NOT SHOWN IN PLAN AND ELEVATION VIEWS FOR CLARITY.
SEE "CORROSION PROTECTION FOR STEEL PILES DETAIL", SHEET 3 OF 3.

NOTES

STIRRUPS IN CAP MAY BE SHIFTED AS NECESSARY TO CLEAR DOWELS.

THE CONCRETE IN THE SHADED AREA OF THE WING SHALL BE POURED AFTER THE VERTICAL CONCRETE BARRIER RAIL IS CAST IF SLIP FORMING IS USED.

FOR PILE SPLICE DETAILS, SEE SHEET 3 OF 3.

FOR WING DETAILS, SEE SHEET 2 OF 3.

TOP OF PILE ELEVATIONS	
1	74.74
2	75.00
3	75.26
4	75.52
5	75.78
6	76.04
7	76.30

PROJECT NO. 17BP.6.R.69
COLUMBUS COUNTY
STATION: 14+36.50 -L-

SHEET 1 OF 3

ENGINEER OF RECORD

NORTH CAROLINA PROFESSIONAL SEAL 14091 5/11/2017 ENGINEER BUCK CHARLES HUNT

DocuSigned by: Buck Charles Hunt
2F15C839738A4EC...

WETHERILL ENGINEERING
1223 Jones Franklin Rd.
Raleigh, N.C. 27606
Bus: 919 851 8077
Fax: 919 851 8107
LICENSE NO. F-0377

STATE OF NORTH CAROLINA
DEPARTMENT OF TRANSPORTATION
RALEIGH

SUBSTRUCTURE

END BENT No. 1

REVISIONS							
NO.	BY:	DATE:	NO.	BY:	DATE:		
1			3				
2			4				

SHEET NO. S-11
TOTAL SHEETS 23

DRAWN BY : J. PENDERGRAFT DATE : 12-16
CHECKED BY : B.C. HUNT DATE : 1-17

DOCUMENT NOT CONSIDERED FINAL UNLESS ALL SIGNATURES COMPLETED

P:\2016\16151.01_COLUMBUS_196\Structures\DGN\COLUMBUS 196 EBT.dgn
5/10/2017 2:15:51 PM

DocuSign Envelope ID: 8C685FC1-CEF0-4ACA-9D8E-B3E25A2F004A

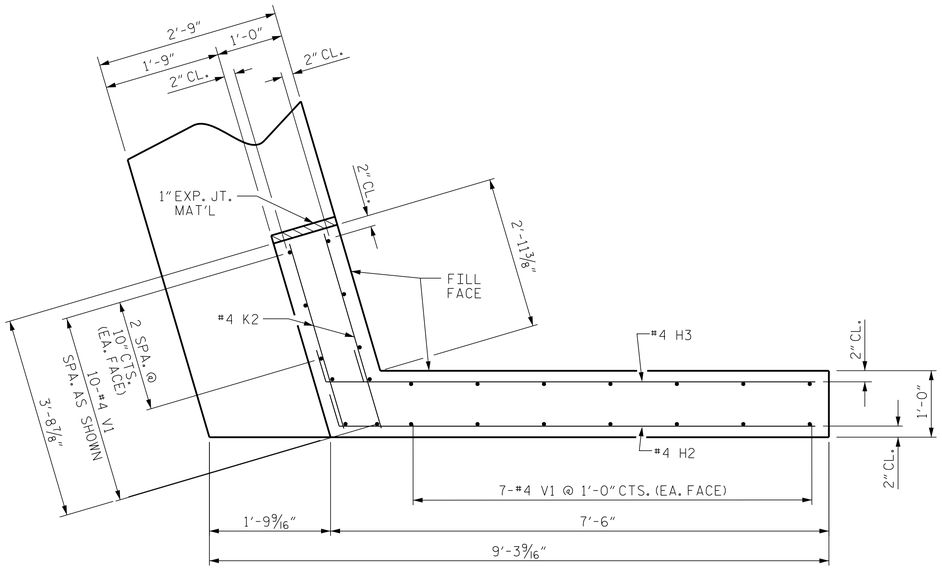

PLAN OF WING (W1)

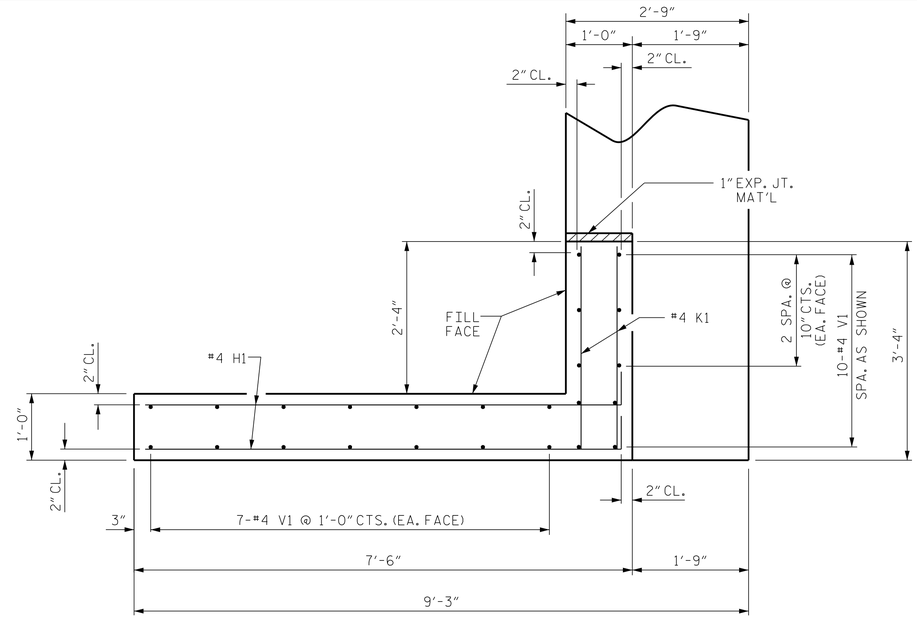

PLAN OF WING (W2)

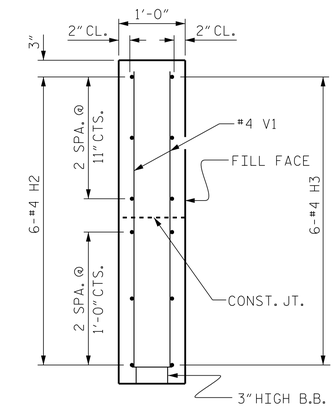

SECTION X-X

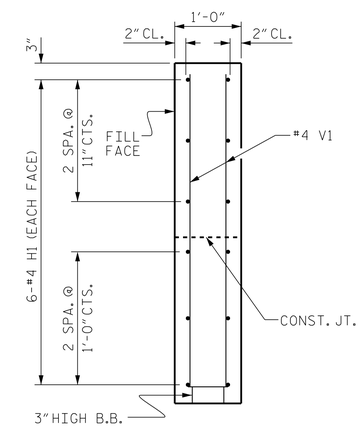

SECTION Y-Y

X

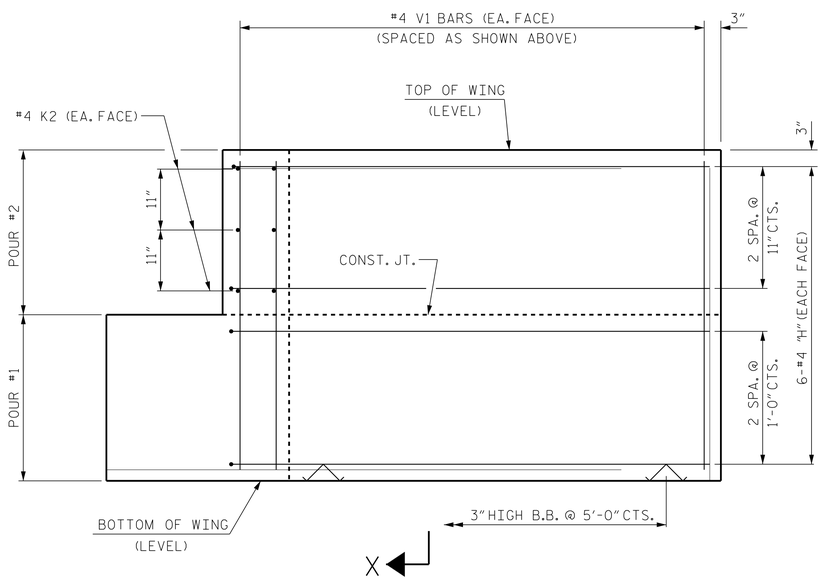

ELEVATION OF WING (W1)

Y

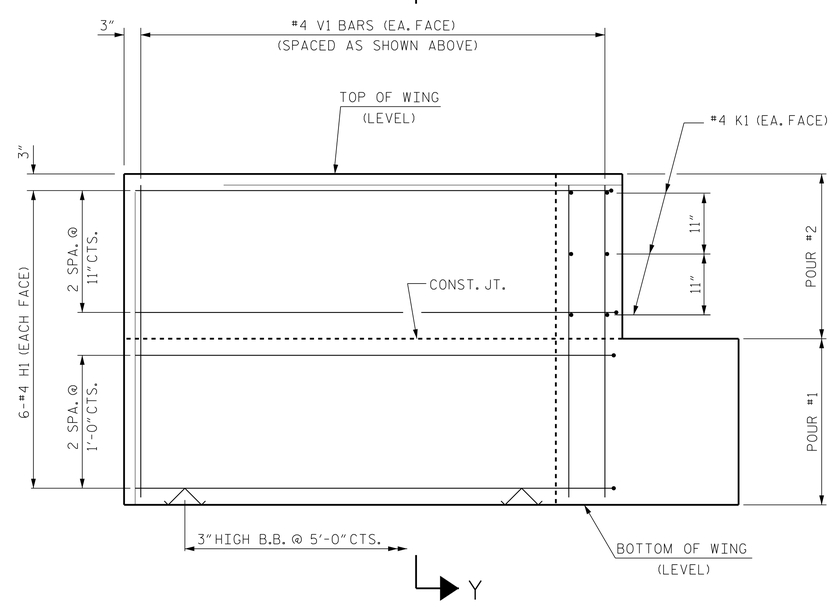

ELEVATION OF WING (W2)

WING DETAILS

PROJECT NO. 17BP.6.R.69

COLUMBUS COUNTY

STATION: 14+36.50 -L-

SHEET 2 OF 3

ENGINEER OF RECORD

NORTH CAROLINA PROFESSIONAL SEAL 4091 ENGINEER BUCK CHARLES HUNT 5/11/2017

Docusigned by: Buck Charles Hunt 2F15C83973BA4EC...

WETHERILL ENGINEERING
1223 Jones Franklin Rd.
Raleigh, N.C. 27606
Bus: 919 851 8077
Fax: 919 851 8107
LICENSE NO. F-0377

STATE OF NORTH CAROLINA
DEPARTMENT OF TRANSPORTATION
RALEIGH

SUBSTRUCTURE

END BENT No. 1
WING DETAILS

REVISIONS						SHEET NO.
NO.	BY:	DATE:	NO.	BY:	DATE:	S-12
1			3			TOTAL SHEETS
2			4			23

DRAWN BY : J. PENDERGRAFT DATE : 12-16
CHECKED BY : B.C.HUNT DATE : 1-17

DOCUMENT NOT CONSIDERED FINAL UNLESS ALL SIGNATURES COMPLETED

P:\2016\16151.01_COLUMBUS_196\Structures\DGN\COLUMBUS 196 EBT.dgn
5/10/2017 2:16:54 PM

DocuSign Envelope ID: 8C685FC1-CEF0-4ACA-9D8E-B3E25A2F004A

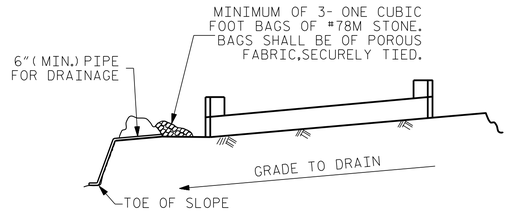

BAGGED STONE AND PIPE SHALL BE PLACED IMMEDIATELY AFTER COMPLETION OF END BENT EXCAVATION. PIPE MAY BE EITHER CONCRETE, CORRUGATED STEEL, CORRUGATED ALUMINUM ALLOY, OR CORRUGATED PLASTIC. PERFORATED PIPE WILL NOT BE ALLOWED.

BAGGED STONE SHALL REMAIN IN PLACE UNTIL THE ENGINEER DIRECTS THAT IT BE REMOVED. THE CONTRACTOR SHALL REMOVE AND DISPOSE OF SILT ACCUMULATIONS AT BAGGED STONE WHEN SO DIRECTED BY THE ENGINEER. BAGS SHALL BE REMOVED AND REPLACED WHENEVER THE ENGINEER DETERMINES THAT THEY HAVE DETERIORATED AND LOST THEIR EFFECTIVENESS.

NO SEPARATE PAYMENT WILL BE MADE FOR THIS WORK AND THE ENTIRE COST OF THIS WORK SHALL BE INCLUDED IN THE UNIT CONTRACT PRICE BID FOR THE SEVERAL PAY ITEMS.

TEMPORARY DRAINAGE AT END BENT

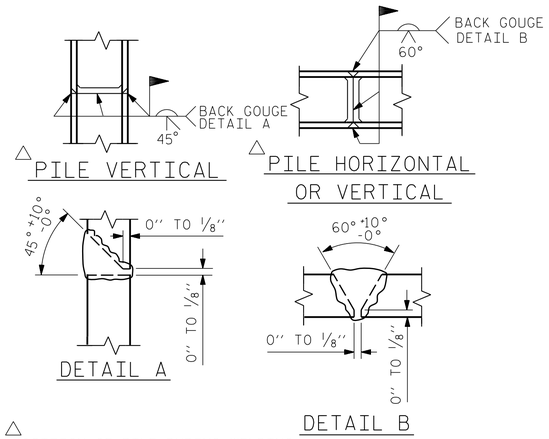

△ POSITION OF PILE DURING WELDING.

PILE SPLICE DETAILS

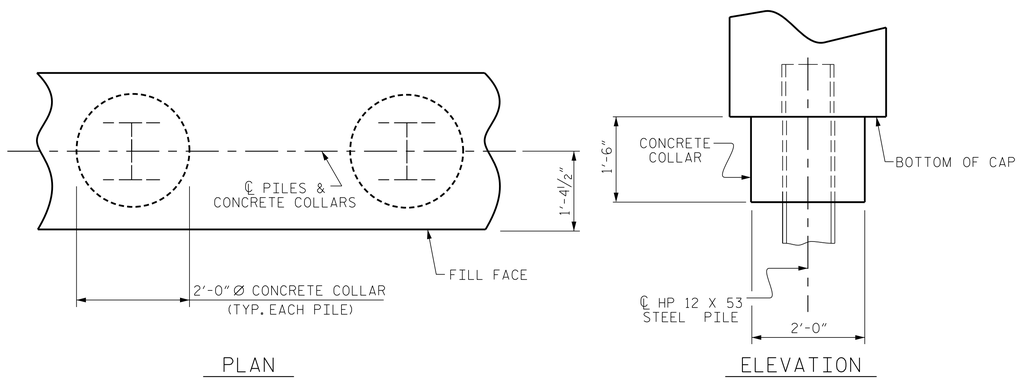

CORROSION PROTECTION FOR STEEL PILES DETAIL

(END BENT No. 1 SHOWN, END BENT No. 2 SIMILAR BY ROTATION)

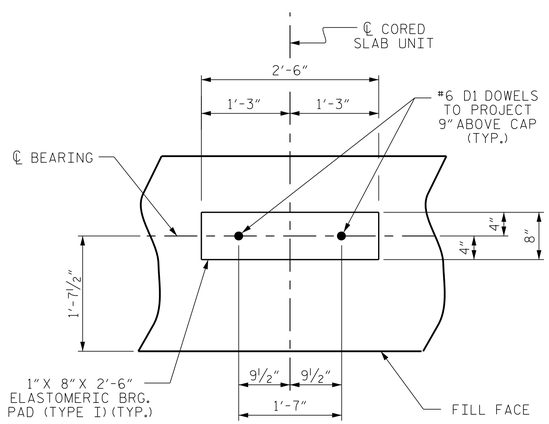

DETAIL "A"

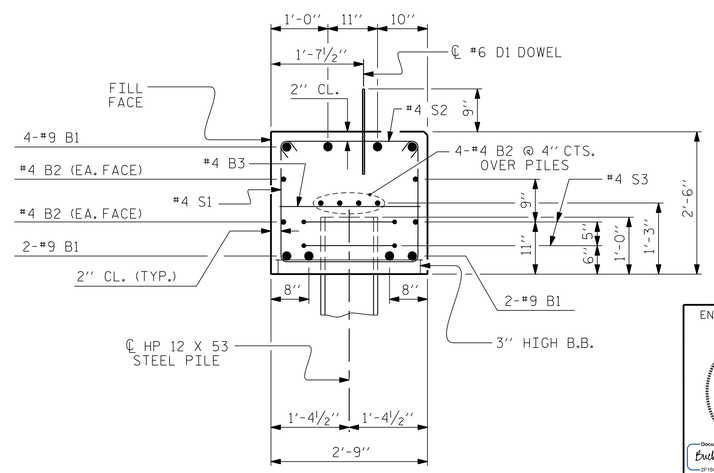

SECTION A-A

(CONCRETE COLLAR NOT SHOWN FOR CLARITY. SEE "CORROSION PROTECTION FOR STEEL PILES DETAIL.")

DOCUMENT NOT CONSIDERED FINAL UNLESS ALL SIGNATURES COMPLETED

BAR TYPES

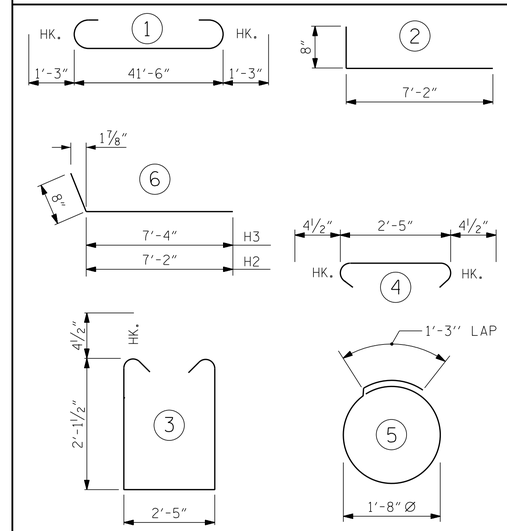

ALL BAR DIMENSIONS ARE OUT TO OUT.

END BENT No. 1
HP 12 X 53 STEEL PILES
NO: 7 LIN. FT. 287

PILE DRIVING EQUIPMENT SETUP FOR HP 12 X 53 STEEL PILES 7 EA.

PILE REDRIVES 2 EA.

BILL OF MATERIAL

END BENT No. 1

BAR	NO.	SIZE	TYPE	LENGTH	WEIGHT
B1	8	#9	1	44'-0"	1197
B2	16	#4	STR	22'-1"	236
B3	11	#4	STR	2'-5"	18
D1	24	#6	STR	1'-6"	54
H1	12	#4	2	7'-10"	63
H2	6	#4	6	7'-10"	31
H3	6	#4	6	8'-0"	32
K1	6	#4	STR	2'-11"	12
K2	6	#4	STR	3'-5"	14
S1	56	#4	3	7'-5"	277
S2	56	#4	4	3'-2"	118
S3	14	#4	5	6'-6"	61
V1	48	#4	STR	4'-8"	150

REINFORCING STEEL 2263 LBS.

CLASS A CONCRETE BREAKDOWN

POUR #1 CAP, LOWER PART OF WINGS & COLLARS 13.1 C.Y.

POUR #2 UPPER PART OF WINGS 1.8 C.Y.

TOTAL CLASS A CONCRETE 14.9 C.Y.

PROJECT NO. 17BP.6.R.69
COLUMBUS COUNTY
STATION: 14+36.50 -L-

SHEET 3 OF 3

ENGINEER OF RECORD

NORTH CAROLINA PROFESSIONAL SEAL 14091 ENGINEER BUCK CHARLES HUNT 5/11/2017

Docusigned by: Buck Charles Hunt
2F15C83973BA4EC...

WETHERILL ENGINEERING
1223 Jones Franklin Rd.
Raleigh, N.C. 27606
Bus: 919 851 8077
Fax: 919 851 8107
LICENSE NO. F-0377

STATE OF NORTH CAROLINA
DEPARTMENT OF TRANSPORTATION
RALEIGH

SUBSTRUCTURE

END BENT No. 1 DETAILS

REVISIONS								SHEET NO.
NO.	BY:	DATE:	NO.	BY:	DATE:			S-13
1			3					TOTAL SHEETS
2			4					23

DRAWN BY : J. PENDERGRAFT DATE : 12-16
CHECKED BY : B.C. HUNT DATE : 1-17

P:\2016\16151.01_COLUMBUS_196\Structures\DGN\COLUMBUS 196 EBT.dgn
5/10/2017 2:18:04 PM

DocuSign Envelope ID: 8C685FC1-CEF0-4ACA-9D8E-B3E25A2F004A

NOTES

STIRRUPS IN CAP MAY BE SHIFTED AS NECESSARY TO CLEAR DOWELS.

★ INVERT ALTERNATE STIRRUPS.

GALVANIZE THE TOP OF EACH INTERIOR BENT PILE A MINIMUM OF 25.0 FEET. GALVANIZE IN ACCORDANCE WITH SECTION 1076 OF THE STANDARD SPECIFICATIONS.

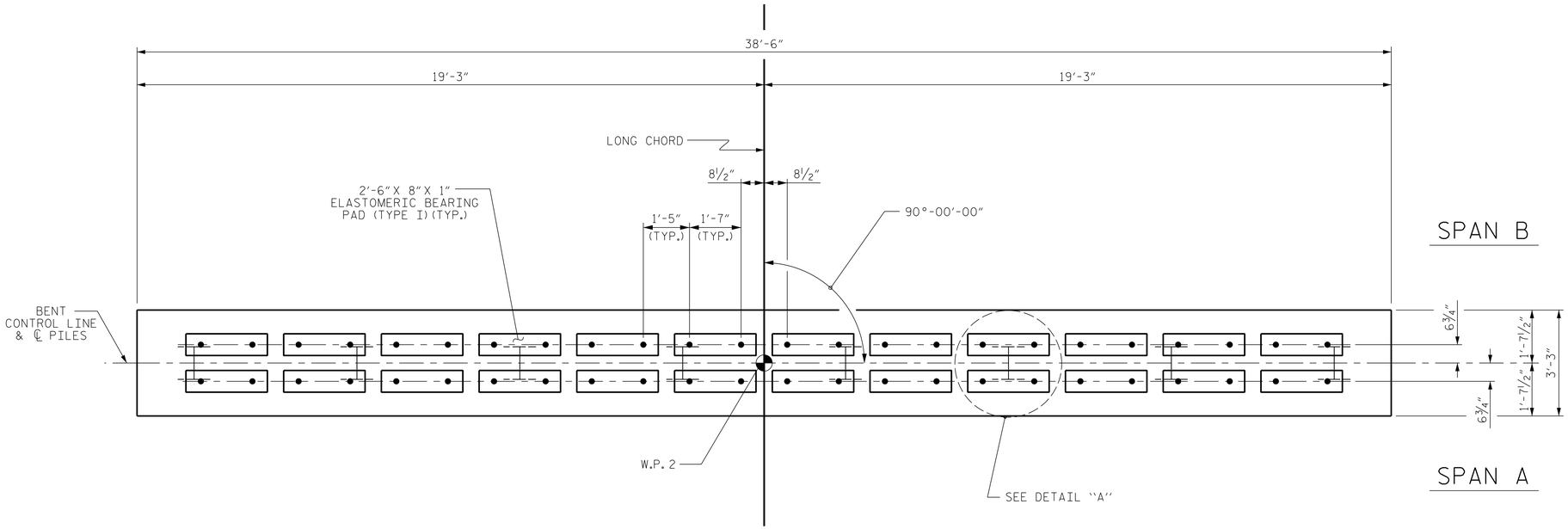

PLAN

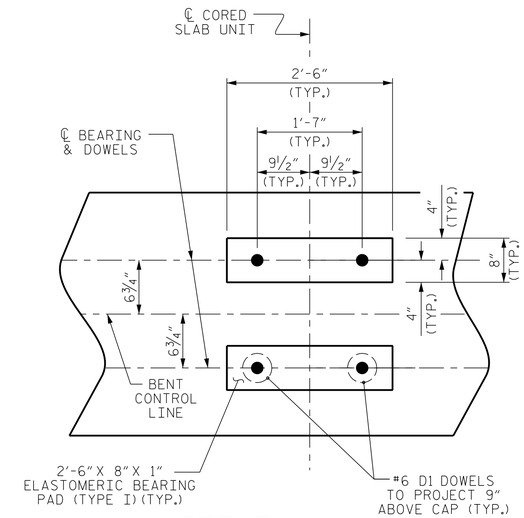

DETAIL "A"

(DIMENSIONS ARE TYPICAL EACH BEARING)

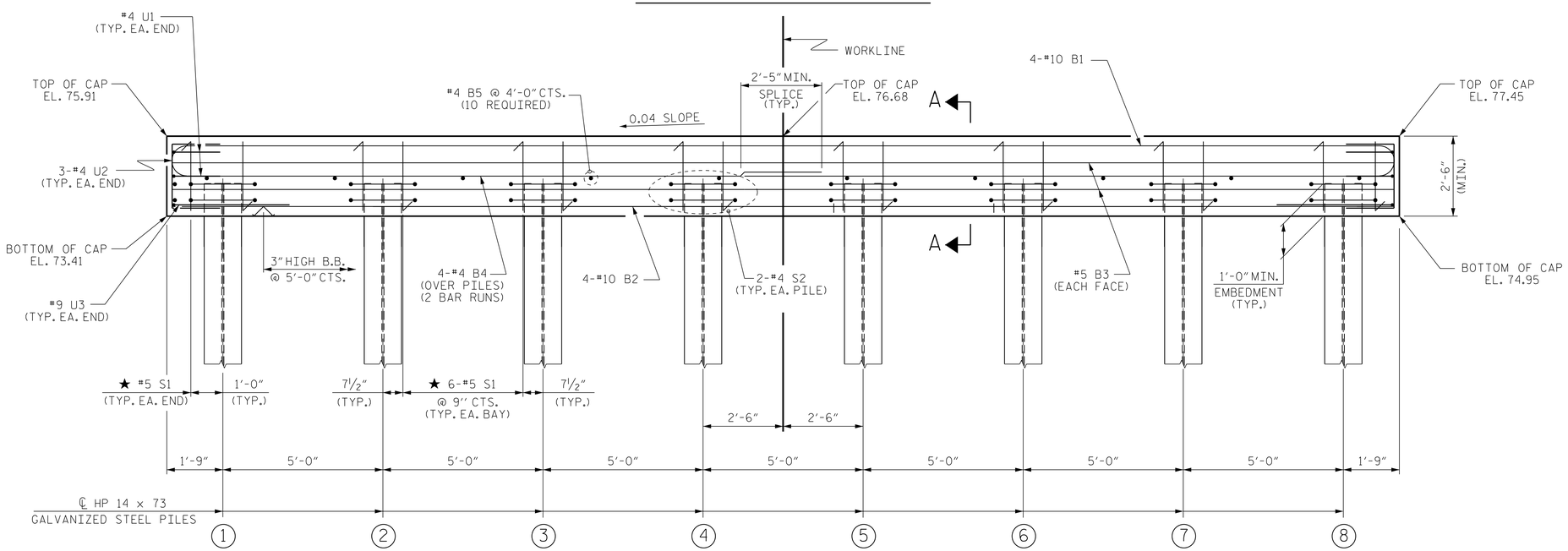

ELEVATION

FOR SECTION A-A, SEE SHEET 2 OF 2

TOP OF PILE ELEVATIONS	
1	74.48
2	74.68
3	74.88
4	75.08
5	75.28
6	75.48
7	75.68
8	75.88

PROJECT NO. 17BP.6.R.69

COLUMBUS COUNTY

STATION: 14+36.50 -L-

SHEET 1 OF 2

ENGINEER OF RECORD

NORTH CAROLINA PROFESSIONAL SEAL 14091 ENGINEER BUCK CHARLES HUNT 5/11/2017

DocuSigned by: Buck Charles Hunt 2F15C83973BA4EC...

WETHERILL ENGINEERING

1223 Jones Franklin Rd.
Raleigh, N.C. 27606
Bus: 919 851 8077
Fax: 919 851 8107
LICENSE NO. F-0377

STATE OF NORTH CAROLINA
DEPARTMENT OF TRANSPORTATION
RALEIGH

SUBSTRUCTURE

BENT No. 1

REVISIONS							
NO.	BY:	DATE:	NO.	BY:	DATE:		
1			3				
2			4				

SHEET NO. S-14

TOTAL SHEETS 23

DRAWN BY : J. PENDERGRAFT DATE : 12-16

CHECKED BY : B.C. HUNT DATE : 1-17

DOCUMENT NOT CONSIDERED FINAL UNLESS ALL SIGNATURES COMPLETED

P:\2016\16151.0.1_COLUMBUS_196\Structures\DGN\COLUMBUS 196 BT.dgn
5/10/2017 2:19:52 PM

DocuSign Envelope ID: 8C685FC1-CEF0-4ACA-9D8E-B3E25A2F004A

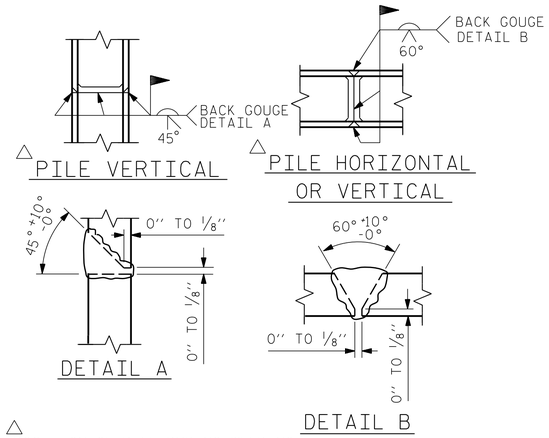

PILE SPLICE DETAILS

BAR TYPES

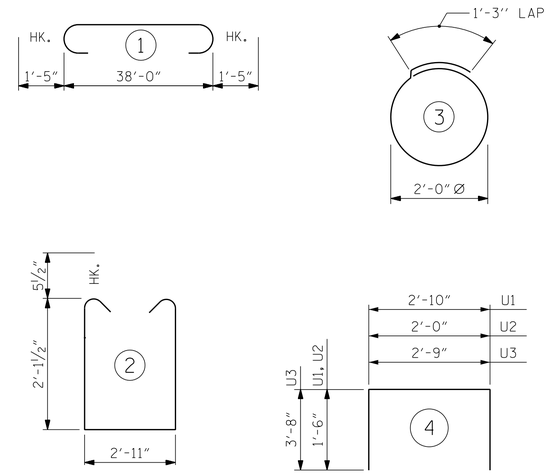

ALL BAR DIMENSIONS ARE OUT TO OUT.

BILL OF MATERIAL

BENT No. 1

BAR	NO.	SIZE	TYPE	LENGTH	WEIGHT
B1	4	#10	1	40'-10"	703
B2	4	#10	STR	38'-2"	657
B3	4	#5	STR	38'-2"	159
B4	8	#4	STR	20'-4"	109
B5	10	#4	STR	2'-11"	19
D1	48	#6	STR	1'-6"	108
S1	44	#5	2	8'-1"	371
S2	16	#4	3	7'-7"	81
U1	4	#4	4	5'-10"	16
U2	6	#4	4	5'-0"	20
U3	2	#9	4	10'-1"	69

REINFORCING STEEL 2312 LBS

CLASS A CONCRETE BREAKDOWN

TOTAL CLASS A CONCRETE 11.6 C.Y.

HP 14 X 73 GALVANIZED STEEL PILES (FOR ONE BENT)
No. 8 LIN. FT. 368

PILE DRIVING EQUIPMENT SETUP FOR HP 14 X 73 GALVANIZED STEEL PILES 8 EA.

PILE REDRIVES 3 EA.

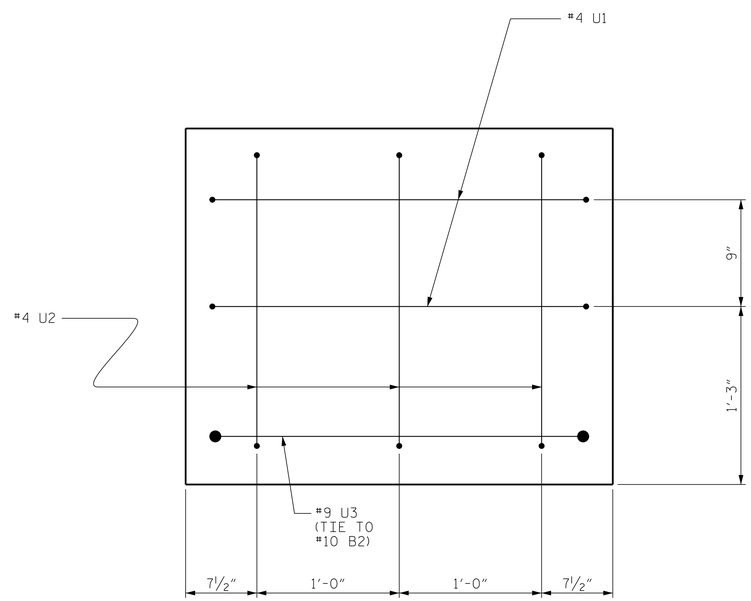

END OF CAP VIEW

(TYPICAL BOTH ENDS)

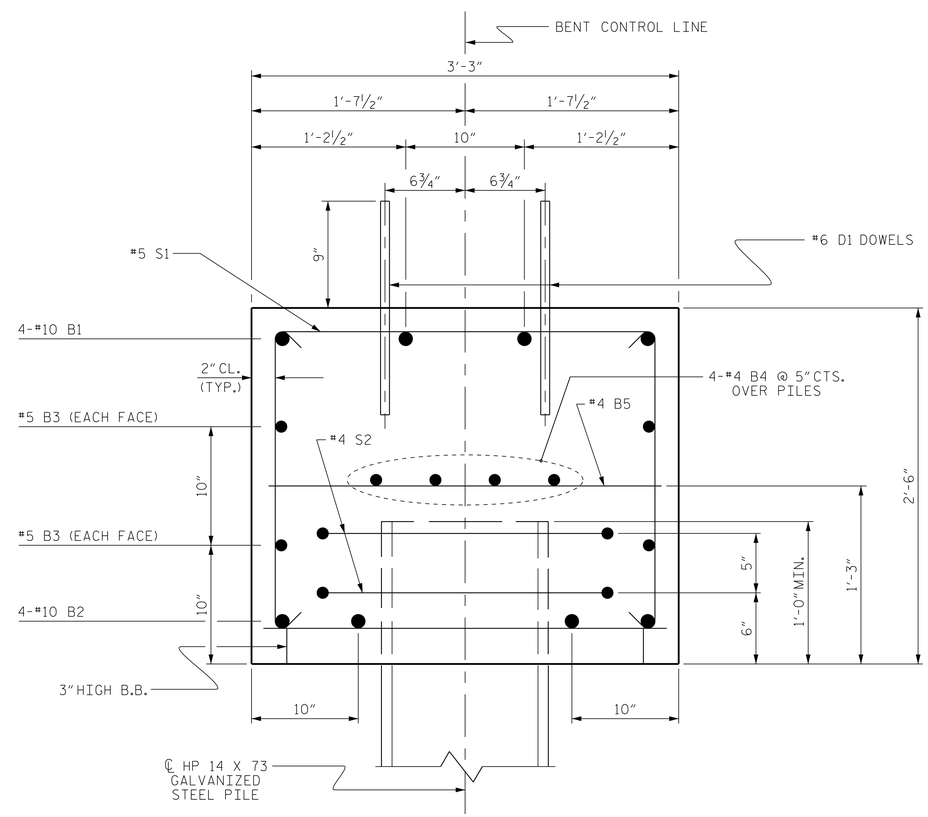

SECTION A-A

PROJECT NO. 17BP.6.R.69
COUNTY COLUMBUS
STATION: 14+36.50 -L-

SHEET 2 OF 2

ENGINEER OF RECORD

NORTH CAROLINA PROFESSIONAL SEAL 14091 ENGINEER BUCK CHARLES HUNT 5/11/2017

DocuSigned by: Buck Charles Hunt
2F15C83873BA4EC...

WETHERILL ENGINEERING
1223 Jones Franklin Rd.
Raleigh, N.C. 27606
Bus: 919 851 8077
Fax: 919 851 8107
LICENSE NO. F-0377

STATE OF NORTH CAROLINA
DEPARTMENT OF TRANSPORTATION
RALEIGH

SUBSTRUCTURE

BENT No. 1

REVISIONS						SHEET NO.
NO.	BY:	DATE:	NO.	BY:	DATE:	S-15
1			3			TOTAL SHEETS
2			4			23

DOCUMENT NOT CONSIDERED FINAL UNLESS ALL SIGNATURES COMPLETED

DRAWN BY : J. PENDERGRAFT DATE : 12-16
CHECKED BY : B.C. HUNT DATE : 1-17

P:\2016\16151.01_COLUMBUS_196\Structures\DGN\COLUMBUS 196 BT.dgn
5/10/2017 2:21:13 PM

DocuSign Envelope ID: 8C685FC1-CEF0-4ACA-9D8E-B3E25A2F004A

NOTES

STIRRUPS IN CAP MAY BE SHIFTED AS NECESSARY TO CLEAR DOWELS.

★ INVERT ALTERNATE STIRRUPS.

GALVANIZE THE TOP OF EACH INTERIOR BENT PILE A MINIMUM OF 27.0 FEET. GALVANIZE IN ACCORDANCE WITH SECTION 1076 OF THE STANDARD SPECIFICATIONS.

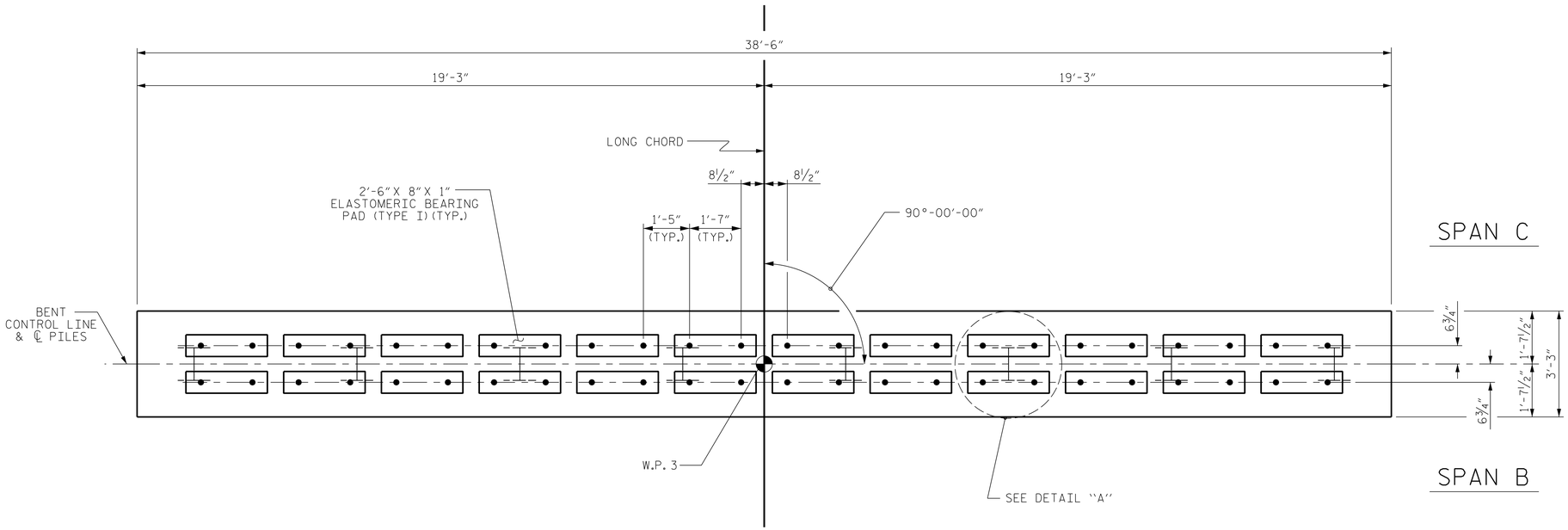

PLAN

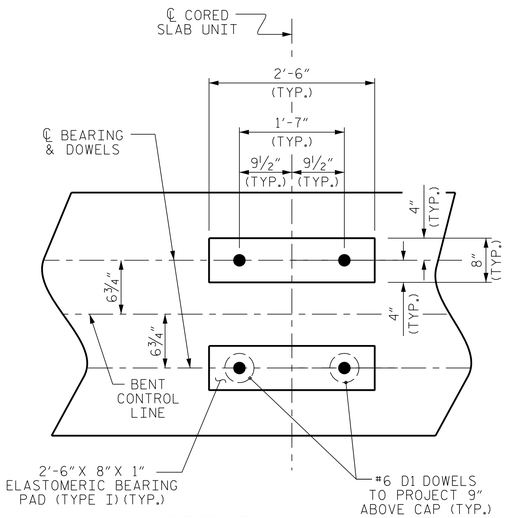

DETAIL "A"

(DIMENSIONS ARE TYPICAL EACH BEARING)

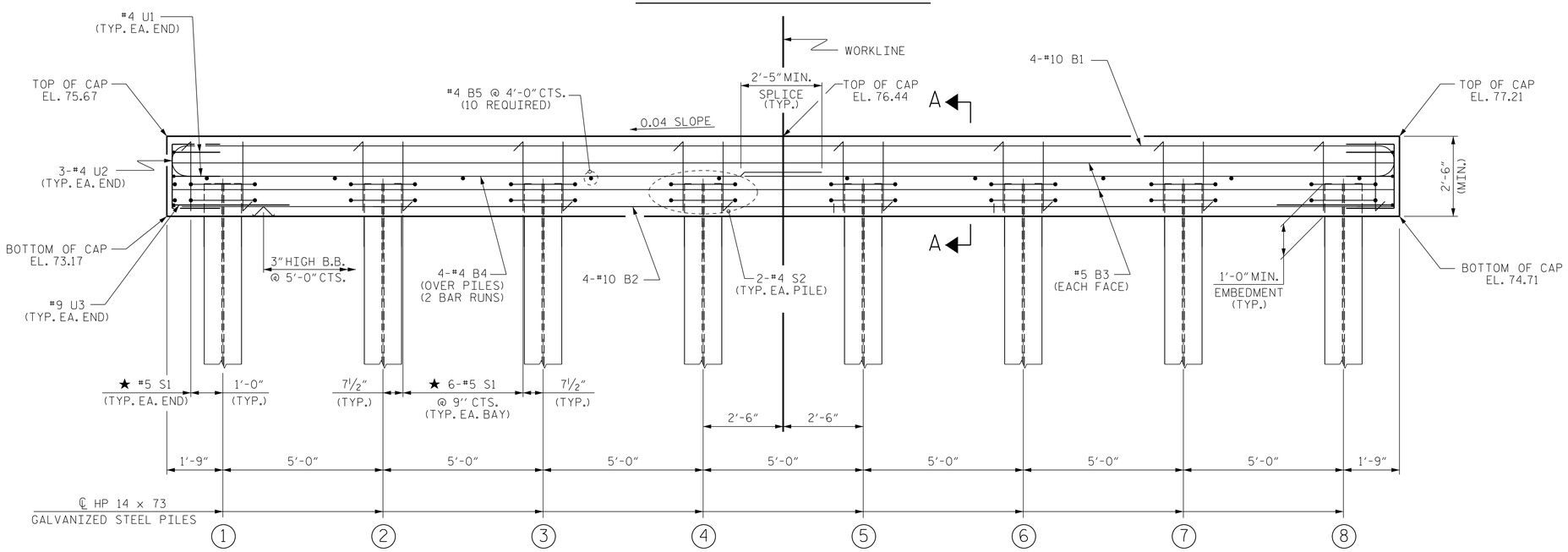

ELEVATION

FOR SECTION A-A, SEE SHEET 2 OF 2

TOP OF PILE ELEVATIONS	
1	74.24
2	74.44
3	74.64
4	74.84
5	75.04
6	75.24
7	75.44
8	75.64

PROJECT NO. 17BP.6.R.69

COLUMBUS COUNTY

STATION: 14+36.50 -L-

SHEET 1 OF 2

ENGINEER OF RECORD

NORTH CAROLINA PROFESSIONAL SEAL 14091 5/11/2017 ENGINEER BUCK CHARLES HUNT

DocuSigned by: Buck Charles Hunt 2F15C83973BA4EC...

WETHERILL ENGINEERING

1223 Jones Franklin Rd.
Raleigh, N.C. 27606
Bus: 919 851 8077
Fax: 919 851 8107
LICENSE NO. F-0377

STATE OF NORTH CAROLINA
DEPARTMENT OF TRANSPORTATION
RALEIGH

SUBSTRUCTURE

BENT No. 2

REVISIONS								SHEET NO.
NO.	BY:	DATE:	NO.	BY:	DATE:			S-16
1			3					TOTAL SHEETS
2			4					23

DRAWN BY : J. PENDERGRAFT DATE : 12-16
CHECKED BY : B.C. HUNT DATE : 1-17

DOCUMENT NOT CONSIDERED FINAL UNLESS ALL SIGNATURES COMPLETED

P:\2016\16151.01_COLUMBUS_196\Structures\DGN\COLUMBUS 196 BT.dgn
5/10/2017 2:22:26 PM

DocuSign Envelope ID: 8C685FC1-CEF0-4ACA-9D8E-B3E25A2F004A

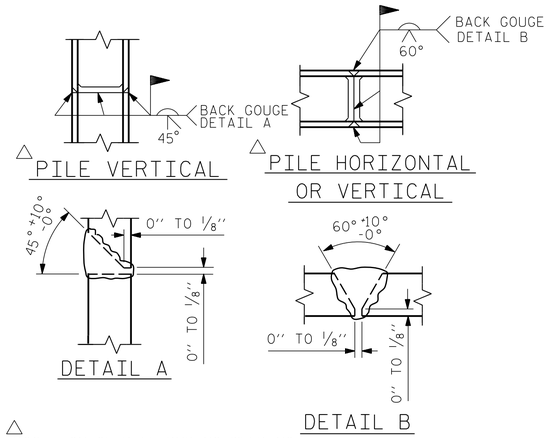

PILE SPLICE DETAILS

BAR TYPES

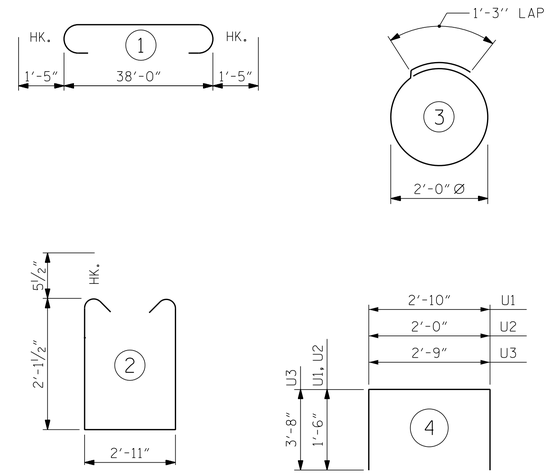

ALL BAR DIMENSIONS ARE OUT TO OUT.

BILL OF MATERIAL

BENT No. 2

BAR	NO.	SIZE	TYPE	LENGTH	WEIGHT
B1	4	#10	1	40'-10"	703
B2	4	#10	STR	38'-2"	657
B3	4	#5	STR	38'-2"	159
B4	8	#4	STR	20'-4"	109
B5	10	#4	STR	2'-11"	19
D1	48	#6	STR	1'-6"	108
S1	44	#5	2	8'-1"	371
S2	16	#4	3	7'-7"	81
U1	4	#4	4	5'-10"	16
U2	6	#4	4	5'-0"	20
U3	2	#9	4	10'-1"	69

REINFORCING STEEL 2312 LBS

CLASS A CONCRETE BREAKDOWN

TOTAL CLASS A CONCRETE 11.6 C.Y.

HP 14 X 73 GALVANIZED STEEL PILES (FOR ONE BENT)
No. 8 LIN. FT. 408

PILE DRIVING EQUIPMENT SETUP FOR HP 14 X 73 GALVANIZED STEEL PILES 8 EA.

PILE REDRIVES 3 EA.

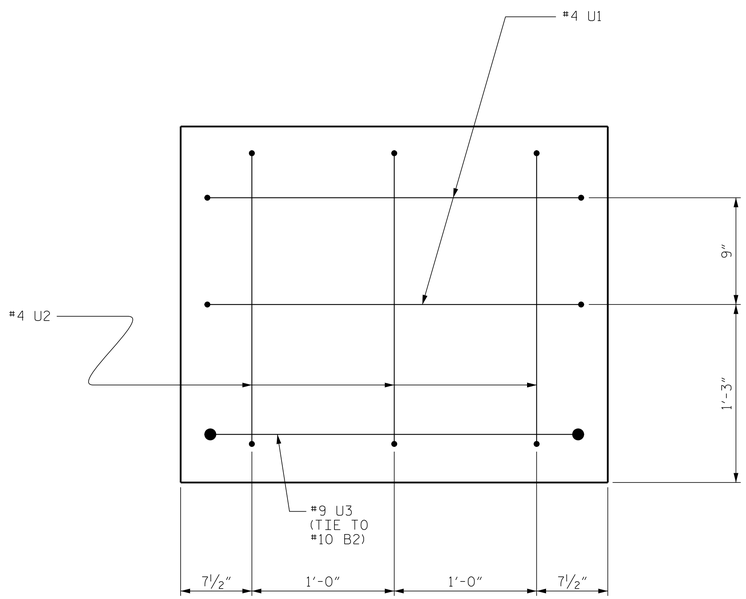

END OF CAP VIEW

(TYPICAL BOTH ENDS)

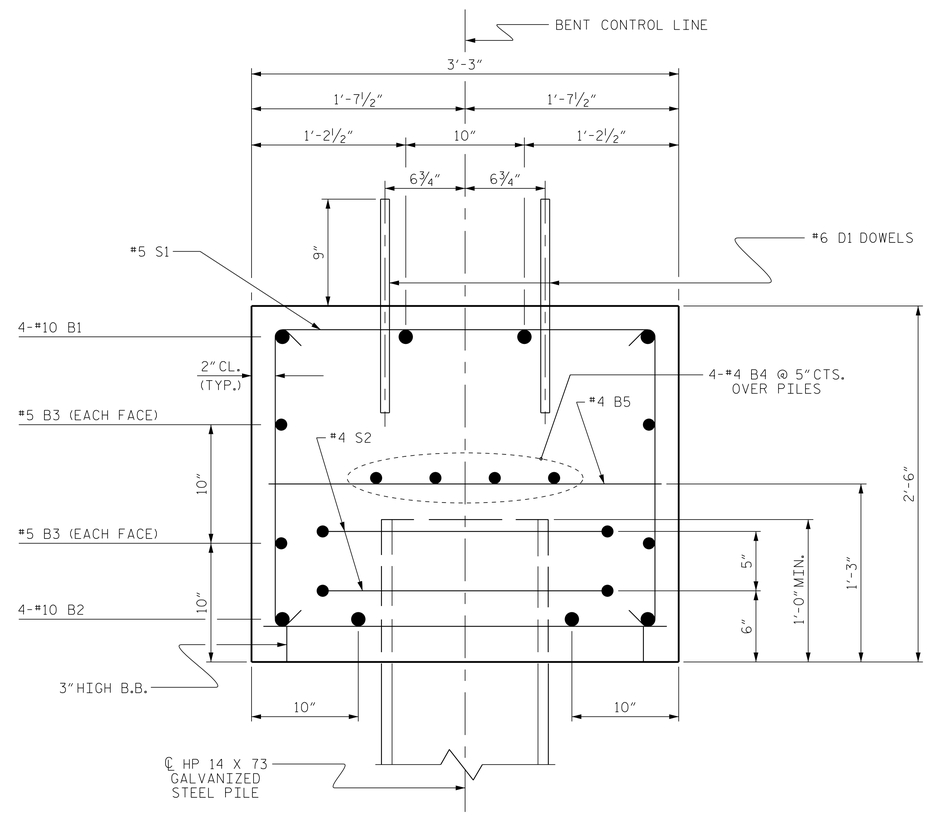

SECTION A-A

PROJECT NO. 17BP.6.R.69
COUNTY COLUMBUS
STATION: 14+36.50 -L-

SHEET 2 OF 2

ENGINEER OF RECORD

NORTH CAROLINA PROFESSIONAL SEAL 14091 ENGINEER BUCK CHARLES HUNT 5/11/2017

DocuSigned by: Buck Charles Hunt
2F15C8397BB44EC...

WETHERILL ENGINEERING
1223 Jones Franklin Rd.
Raleigh, N.C. 27606
Bus: 919 851 8077
Fax: 919 851 8107
LICENSE NO. F-0377

STATE OF NORTH CAROLINA
DEPARTMENT OF TRANSPORTATION
RALEIGH

SUBSTRUCTURE

BENT No. 2

REVISIONS						SHEET NO.
NO.	BY:	DATE:	NO.	BY:	DATE:	S-17
1			3			TOTAL SHEETS
2			4			23

DOCUMENT NOT CONSIDERED FINAL UNLESS ALL SIGNATURES COMPLETED

DRAWN BY : J. PENDERGRAFT DATE : 12-16
CHECKED BY : B.C. HUNT DATE : 1-17

P:\2016\16151.01_COLUMBUS_196\Structures\DGN\COLUMBUS 196 BT.dgn
5/10/2017 2:23:30 PM

DocuSign Envelope ID: 8C685FC1-CEF0-4ACA-9D8E-B3E25A2F004A

NOTES

STIRRUPS IN CAP MAY BE SHIFTED AS NECESSARY TO CLEAR DOWELS.

THE CONCRETE IN THE SHADED AREA OF THE WING SHALL BE POURED AFTER THE VERTICAL CONCRETE BARRIER RAIL IS CAST IF SLIP FORMING IS USED.

FOR PILE SPLICE DETAILS, SEE SHEET 3 OF 3.

FOR WING DETAILS, SEE SHEET 2 OF 3.

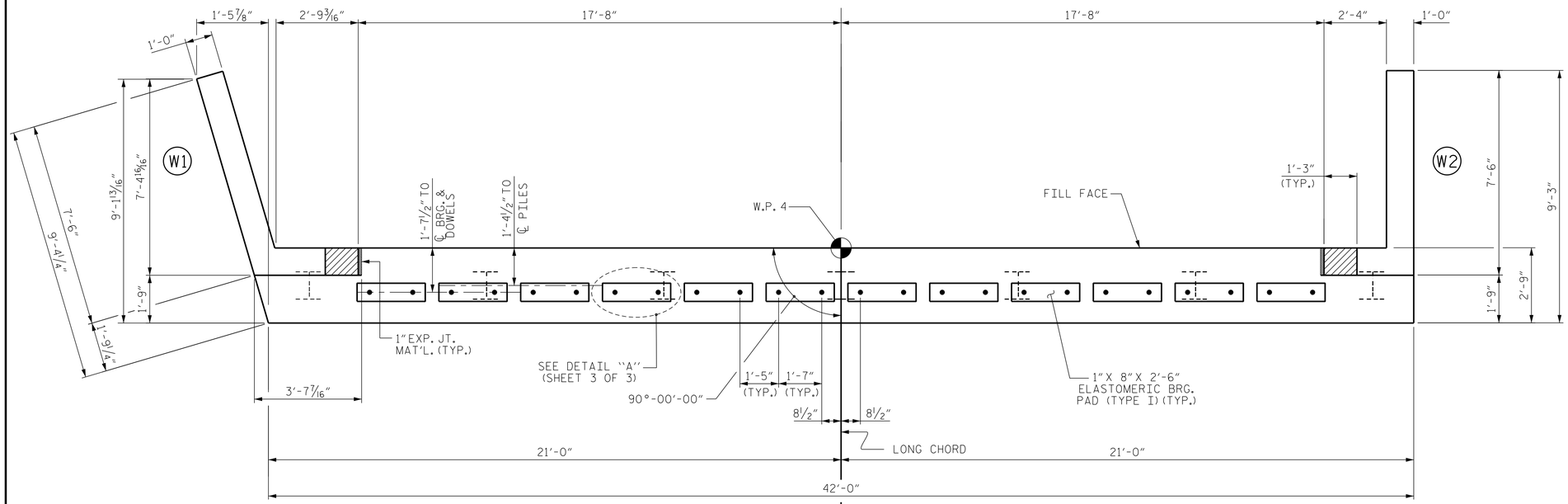

PLAN

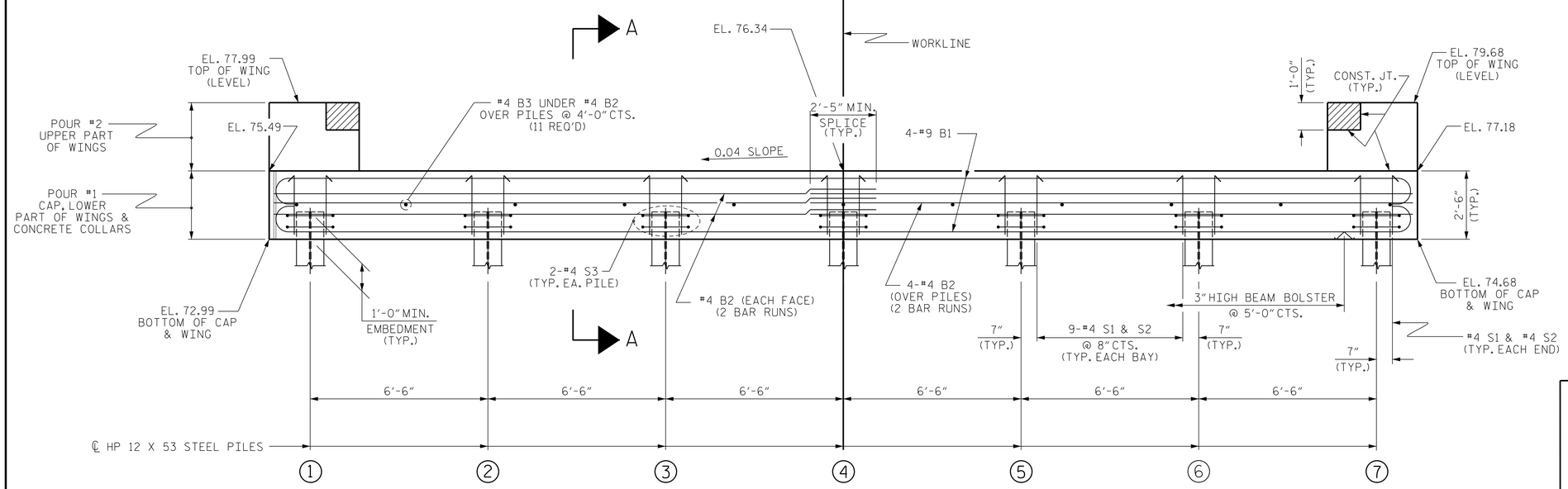

ELEVATION

WINGS NOT SHOWN FOR CLARITY.
FOR SECTION A-A, SEE SHEET 3 OF 3.
CONCRETE COLLARS FOR STEEL PILES NOT SHOWN IN PLAN AND ELEVATION VIEWS FOR CLARITY.
SEE "CORROSION PROTECTION FOR STEEL PILES DETAIL", SHEET 3 OF 3.

TOP OF PILE ELEVATIONS	
1	74.06
2	74.32
3	74.58
4	74.84
5	75.10
6	75.36
7	75.62

PROJECT NO. 17BP.6.R.69
COUNTY COLUMBUS
STATION: 14+36.50 -L-

SHEET 1 OF 3

DRAWN BY : J. PENDERGRAFT DATE : 12-16
CHECKED BY : B.C. HUNT DATE : 1-17

DOCUMENT NOT CONSIDERED FINAL UNLESS ALL SIGNATURES COMPLETED

ENGINEER OF RECORD
NORTH CAROLINA PROFESSIONAL SEAL 14091 ENGINEER BUCK CHARLES HUNT 5/11/2017
DocuSigned by: Buck Charles Hunt
2F15C83873BA4EC...

WETHERILL ENGINEERING
1223 Jones Franklin Rd.
Raleigh, N.C. 27606
Bus: 919 851 8077
Fax: 919 851 8107
LICENSE NO. F-0377

STATE OF NORTH CAROLINA
DEPARTMENT OF TRANSPORTATION
RALEIGH

SUBSTRUCTURE
END BENT No. 2

REVISIONS						SHEET NO.
NO.	BY:	DATE:	NO.	BY:	DATE:	S-18
1			3			TOTAL SHEETS
2			4			23

P:\2016\16151.01_COLUMBUS_196\Structures\DGN\COLUMBUS 196 EBT.dgn
5/10/2017 2:25:10 PM

DocuSign Envelope ID: 8C685FC1-CEF0-4ACA-9D8E-B3E25A2F004A

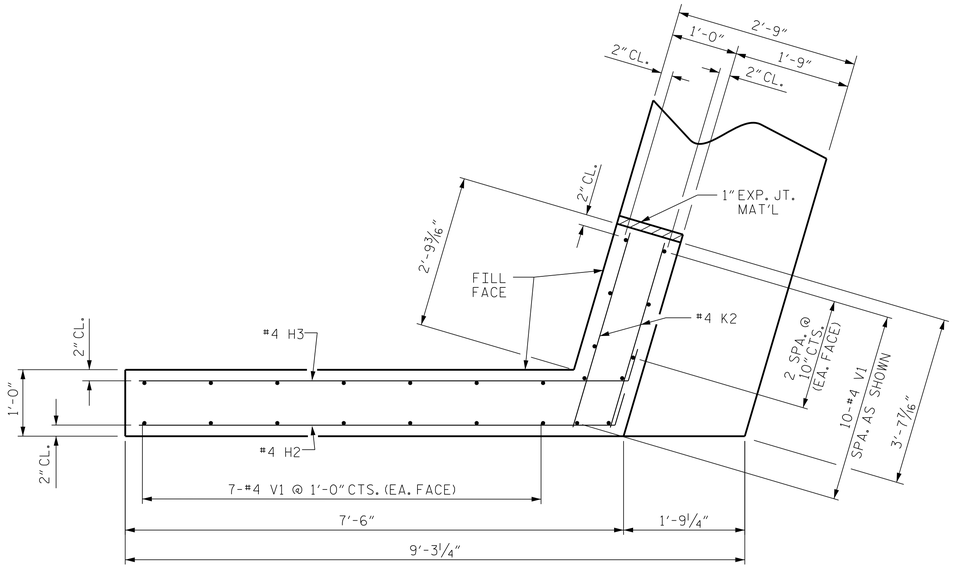

PLAN OF WING (W1)

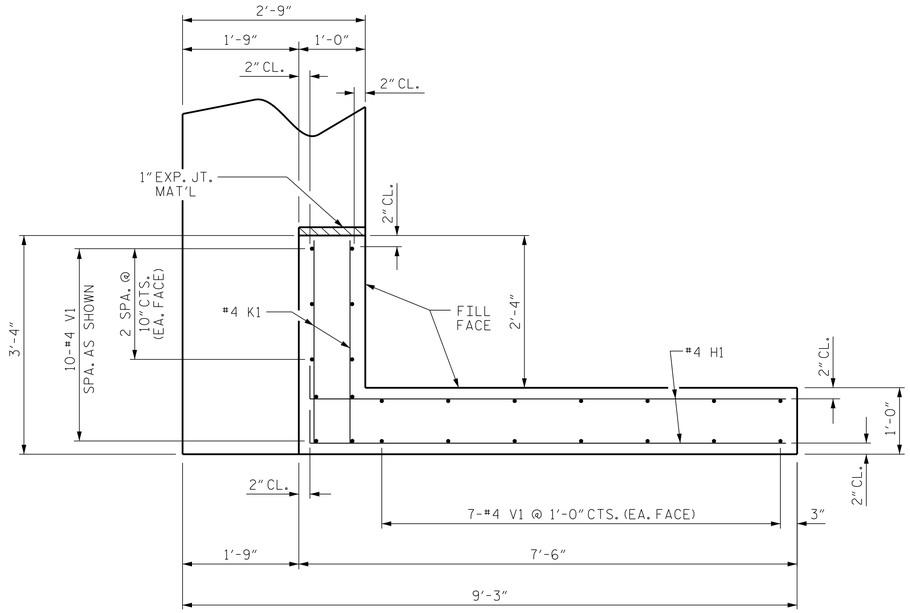

PLAN OF WING (W2)

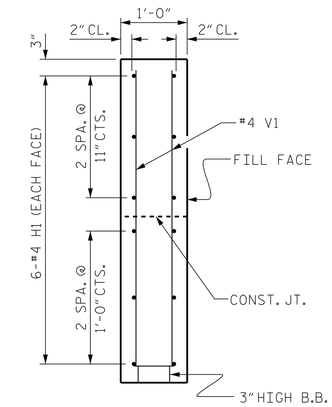

SECTION X-X

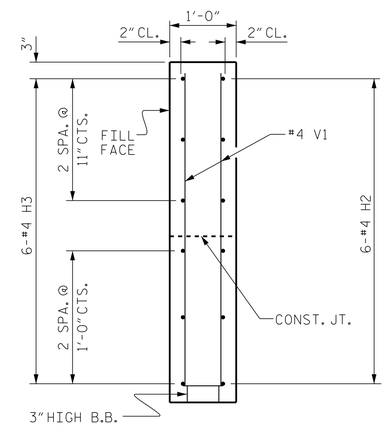

SECTION Y-Y

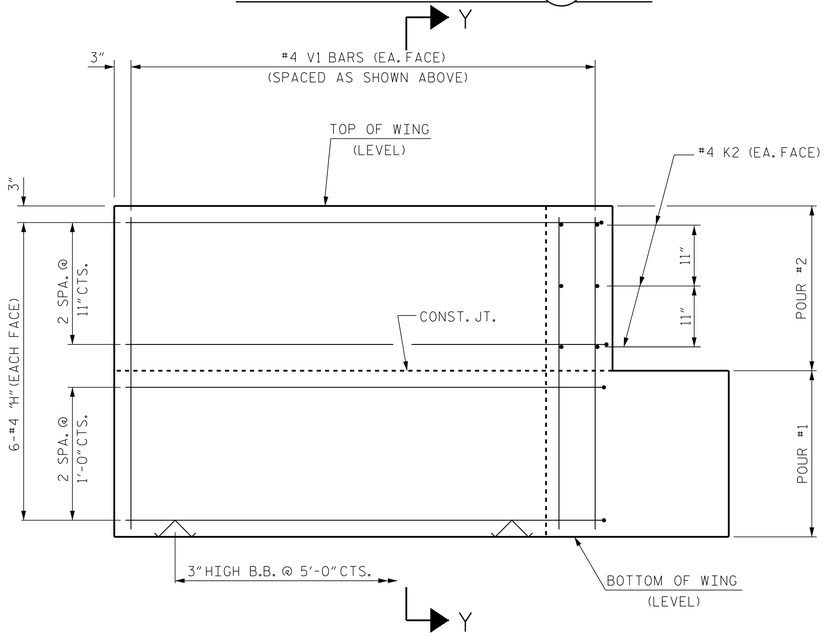

ELEVATION OF WING (W1)

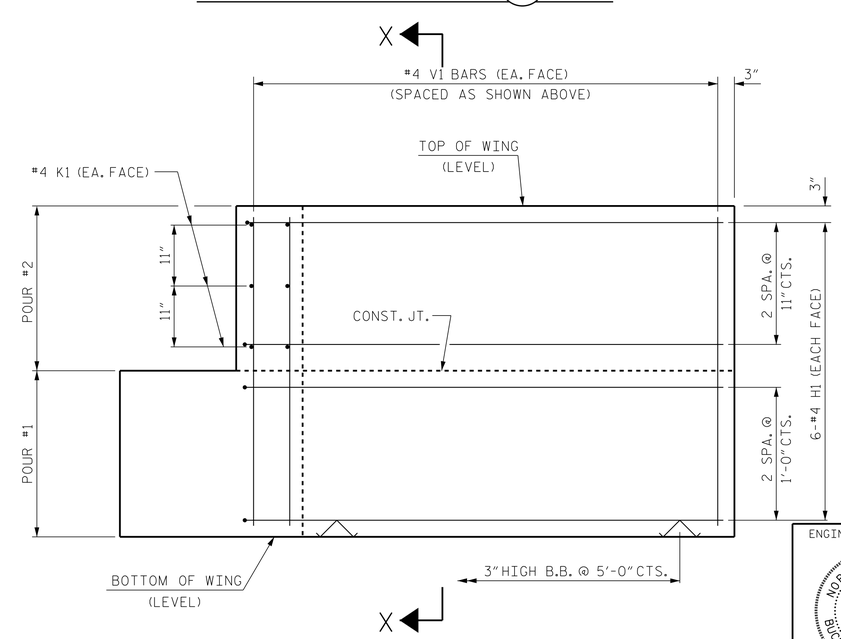

ELEVATION OF WING (W2)

WING DETAILS

PROJECT NO. 17BP.6.R.69

COLUMBUS COUNTY

STATION: 14+36.50 -L-

SHEET 2 OF 3

ENGINEER OF RECORD

NORTH CAROLINA PROFESSIONAL SEAL 14091 5/11/2017 ENGINEER BUCK CHARLES HUNT

DocuSigned by: Buck Charles Hunt

WETHERILL ENGINEERING

1223 Jones Franklin Rd.
Raleigh, N.C. 27606
Bus: 919 851 8077
Fax: 919 851 8107
LICENSE NO. F-0377

STATE OF NORTH CAROLINA
DEPARTMENT OF TRANSPORTATION
RALEIGH

SUBSTRUCTURE

END BENT No. 2
WING DETAILS

REVISIONS						SHEET NO.
NO.	BY:	DATE:	NO.	BY:	DATE:	S-19
1			3			TOTAL SHEETS
2			4			23

DRAWN BY : J. PENDERGRAFT DATE : 12-16
CHECKED BY : B.C. HUNT DATE : 1-17

DOCUMENT NOT CONSIDERED FINAL UNLESS ALL SIGNATURES COMPLETED

P:\2016\16151.01_COLUMBUS_196\Structures\DGN\COLUMBUS 196 EBT.dgn
5/10/2017 2:26:03 PM

DocuSign Envelope ID: 8C685FC1-CEF0-4ACA-9D8E-B3E25A2F004A

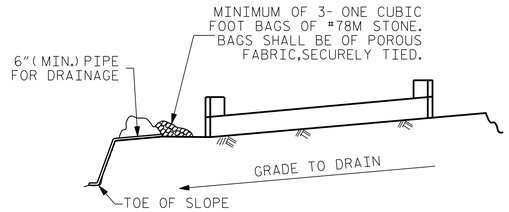

BAGGED STONE AND PIPE SHALL BE PLACED IMMEDIATELY AFTER COMPLETION OF END BENT EXCAVATION. PIPE MAY BE EITHER CONCRETE, CORRUGATED STEEL, CORRUGATED ALUMINUM ALLOY, OR CORRUGATED PLASTIC. PERFORATED PIPE WILL NOT BE ALLOWED.

BAGGED STONE SHALL REMAIN IN PLACE UNTIL THE ENGINEER DIRECTS THAT IT BE REMOVED. THE CONTRACTOR SHALL REMOVE AND DISPOSE OF SILT ACCUMULATIONS AT BAGGED STONE WHEN SO DIRECTED BY THE ENGINEER. BAGS SHALL BE REMOVED AND REPLACED WHENEVER THE ENGINEER DETERMINES THAT THEY HAVE DETERIORATED AND LOST THEIR EFFECTIVENESS.

NO SEPARATE PAYMENT WILL BE MADE FOR THIS WORK AND THE ENTIRE COST OF THIS WORK SHALL BE INCLUDED IN THE UNIT CONTRACT PRICE BID FOR THE SEVERAL PAY ITEMS.

TEMPORARY DRAINAGE AT END BENT

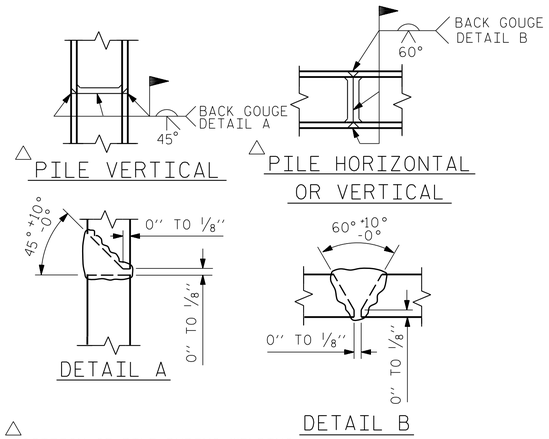

△ POSITION OF PILE DURING WELDING.

PILE SPLICE DETAILS

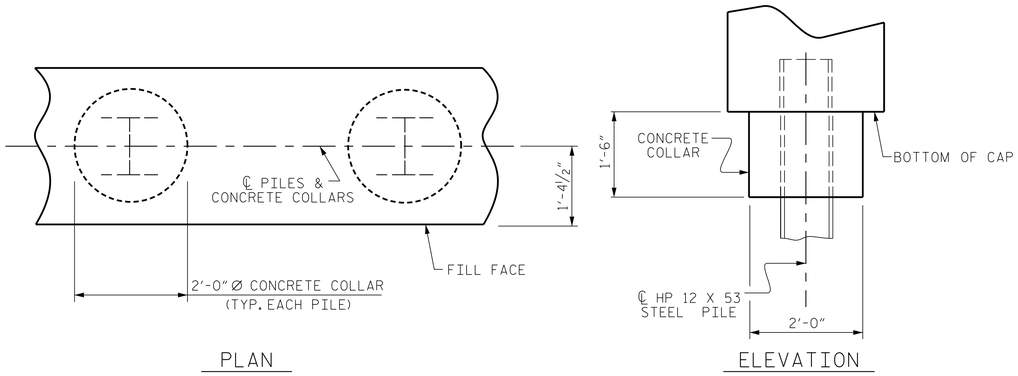

CORROSION PROTECTION FOR STEEL PILES DETAIL

(END BENT No. 1 SHOWN, END BENT No. 2 SIMILAR BY ROTATION)

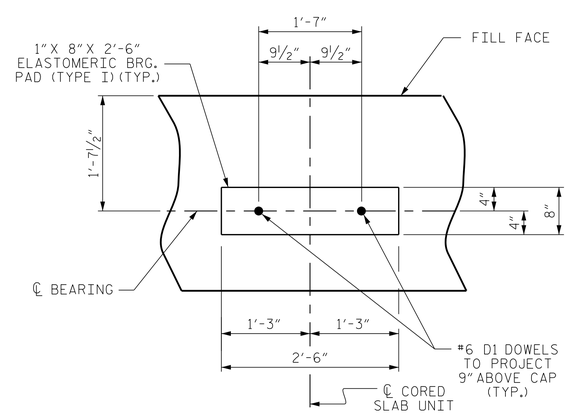

DETAIL "A"

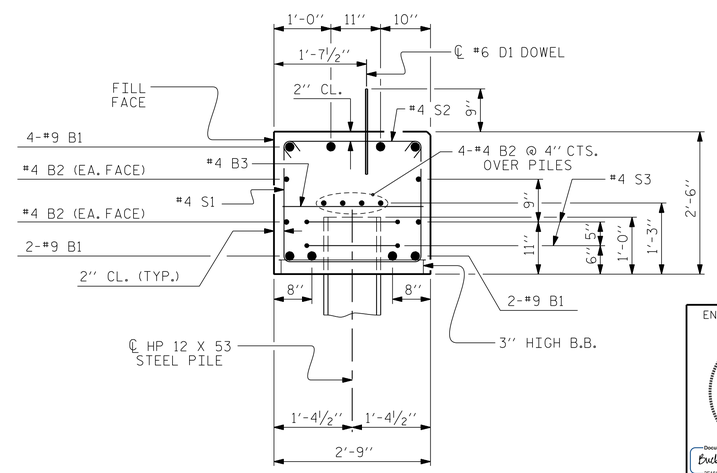

SECTION A-A

(CONCRETE COLLAR NOT SHOWN FOR CLARITY. SEE "CORROSION PROTECTION FOR STEEL PILES DETAIL.")

BAR TYPES

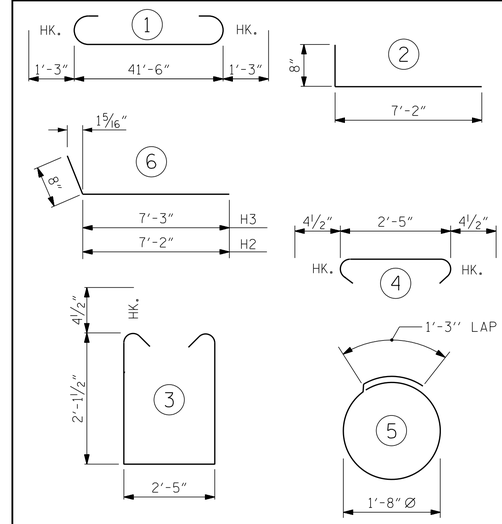

ALL BAR DIMENSIONS ARE OUT TO OUT.

END BENT No. 2
HP 12 X 53 STEEL PILES
NO: 7 LIN. FT. 287

PILE DRIVING EQUIPMENT SETUP FOR HP 12 X 53 STEEL PILES 7 EA.

PILE REDRIVES 2 EA.

BILL OF MATERIAL

END BENT No. 2

BAR	NO.	SIZE	TYPE	LENGTH	WEIGHT
B1	8	#9	1	44'-0"	1197
B2	16	#4	STR	22'-1"	236
B3	11	#4	STR	2'-5"	18
D1	24	#6	STR	1'-6"	54
H1	12	#4	2	7'-10"	63
H2	6	#4	6	7'-10"	31
H3	6	#4	6	7'-11"	32
K1	6	#4	STR	2'-11"	12
K2	6	#4	STR	3'-3"	13
S1	56	#4	3	7'-5"	277
S2	56	#4	4	3'-2"	118
S3	14	#4	5	6'-6"	61
V1	48	#4	STR	4'-8"	150

REINFORCING STEEL 2262 LBS.

CLASS A CONCRETE BREAKDOWN

POUR #1 CAP, LOWER PART OF WINGS & COLLARS 13.1 C.Y.

POUR #2 UPPER PART OF WINGS 1.8 C.Y.

TOTAL CLASS A CONCRETE 14.9 C.Y.

PROJECT NO. 17BP.6.R.69
COLUMBUS COUNTY
STATION: 14+36.50 -L-

SHEET 3 OF 3

ENGINEER OF RECORD

NORTH CAROLINA PROFESSIONAL SEAL 14091 ENGINEER BUCK CHARLES HUNT 5/11/2017

DocuSigned by: Buck Charles Hunt
2F15C83973BA4EC...

WETHERILL ENGINEERING
1223 Jones Franklin Rd.
Raleigh, N.C. 27606
Bus: 919 851 8077
Fax: 919 851 8107
LICENSE NO. F-0377

STATE OF NORTH CAROLINA
DEPARTMENT OF TRANSPORTATION
RALEIGH

SUBSTRUCTURE

END BENT No. 2 DETAILS

REVISIONS								SHEET NO.
NO.	BY:	DATE:	NO.	BY:	DATE:			S-20
1			3					TOTAL SHEETS
2			4					23

DOCUMENT NOT CONSIDERED FINAL UNLESS ALL SIGNATURES COMPLETED

DRAWN BY : J. PENDERGRAFT DATE : 12-16
CHECKED BY : B.C. HUNT DATE : 1-17

P:\2016\16151.01_COLUMBUS_196\Structures\DGN\COLUMBUS 196 EBT.dgn
5/10/2017 2:27:40 PM

DocuSign Envelope ID: 8C685FC1-CEF0-4ACA-9D8E-B3E25A2F004A

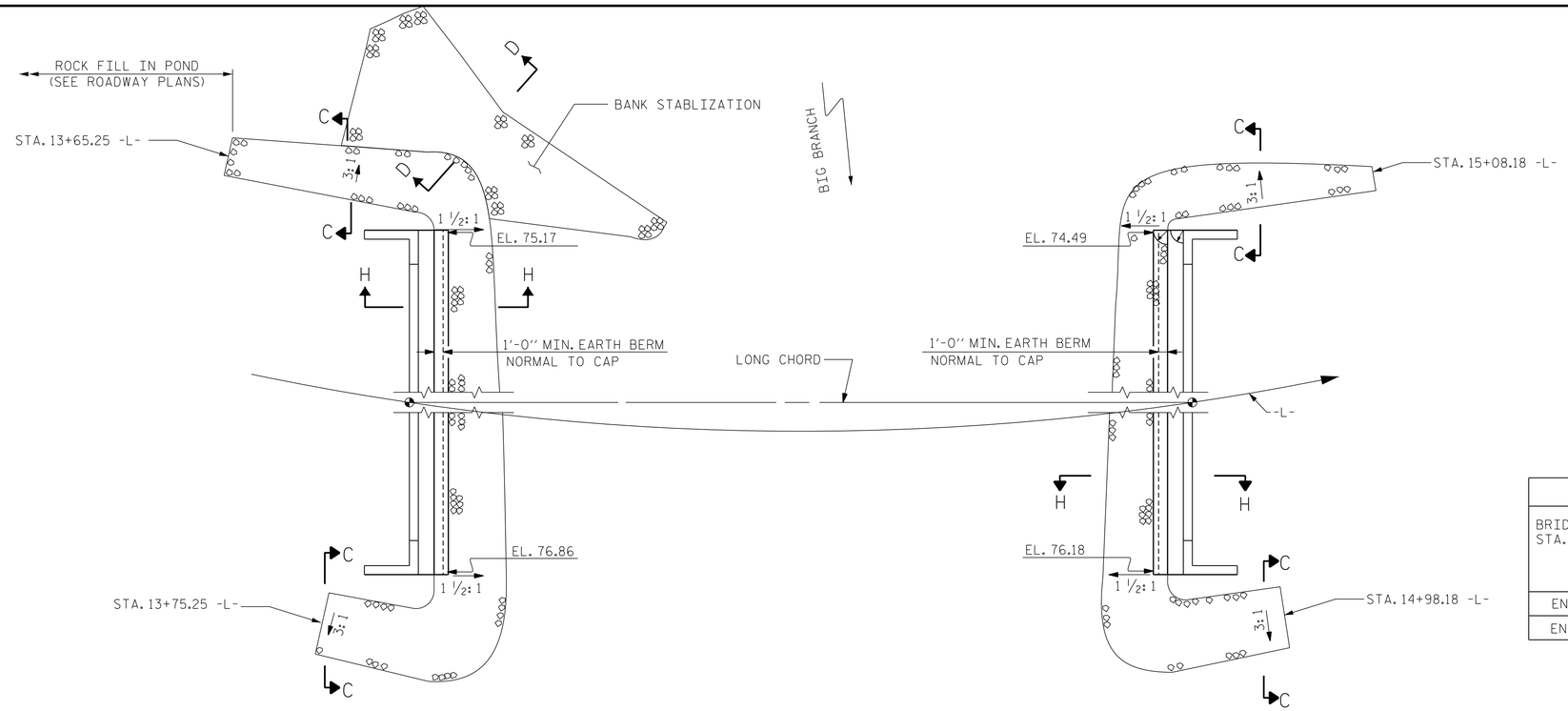

@ END BENT 1

@ END BENT 2

ESTIMATED QUANTITIES		
BRIDGE @ STA. 14+36.50 -L-	RIP RAP CLASS II (2'-0" THICK)	GEOTEXTILE FOR DRAINAGE
	TONS	SQUARE YARDS
END BENT 1	130	140
END BENT 2	55	60

QUANITY OF RIPRAP FOR BANK STABILIZATION IS INCLUDED IN THE END BENT 1 QUANITY

PLAN OF RIP RAP

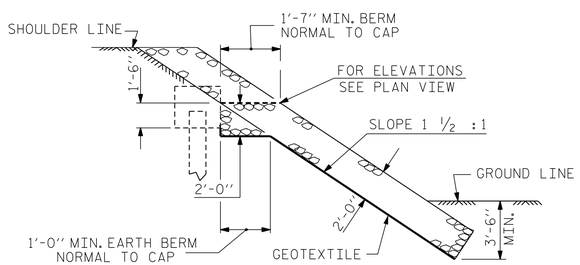

SECTION H-H

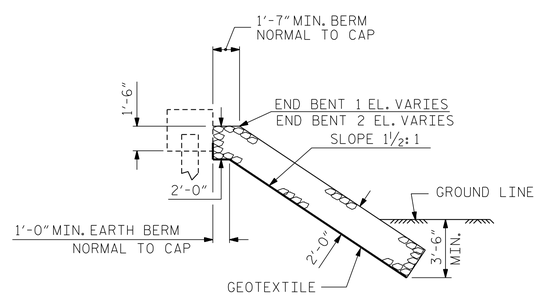

℄ SECTION

BERM RIP RAPPED

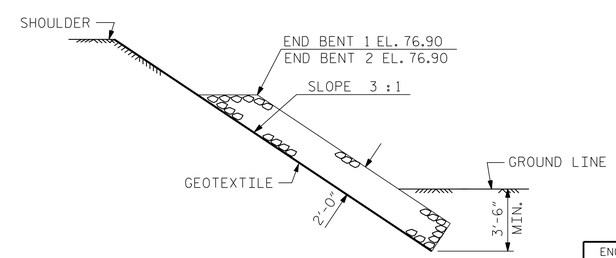

SECTION C-C

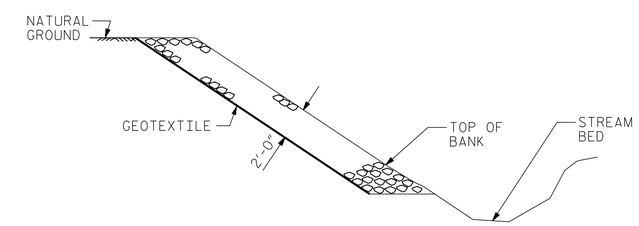

SECTION D-D

PROJECT NO. 17BP.6.R.69

COUNTY COLUMBUS

STATION: 14+36.50 -L-

ENGINEER OF RECORD

NORTH CAROLINA PROFESSIONAL SEAL 14091 5/11/2017 ENGINEER BUCK CHARLES HUNT

DocuSigned by: Buck Charles Hunt

WETHERILL ENGINEERING

1223 Jones Franklin Rd.
Raleigh, N.C. 27606
Bus: 919 851 8077
Fax: 919 851 8107
LICENSE NO. F-0377

STATE OF NORTH CAROLINA
DEPARTMENT OF TRANSPORTATION
RALEIGH

STANDARD

RIP RAP DETAILS

REVISIONS						
NO.	BY:	DATE:	NO.	BY:	DATE:	
1			3			
2			4			

SHEET NO. S-21

TOTAL SHEETS 23

DOCUMENT NOT CONSIDERED FINAL UNLESS ALL SIGNATURES COMPLETED

ASSEMBLED BY : J PENDERGRAFT	DATE : 12-16		
CHECKED BY : B.C. HUNT	DATE : 1-17		
DRAWN BY : REK 1/84	REV. 5/1/06R	TLA/GM	
CHECKED BY : RDU 1/84	REV. 10/1/11	MAA/GM	
	REV. 12/21/11	MAA/GM	

P:\2016\16151.01_COLUMBUS_196\Structures\DGN\COLUMBUS 196 SP.dgn
5/10/2017 2:33:55 PM

STD. NO. RR1

DocuSign Envelope ID: 8C685FC1-CEF0-4ACA-9D8E-B3E25A2F004A

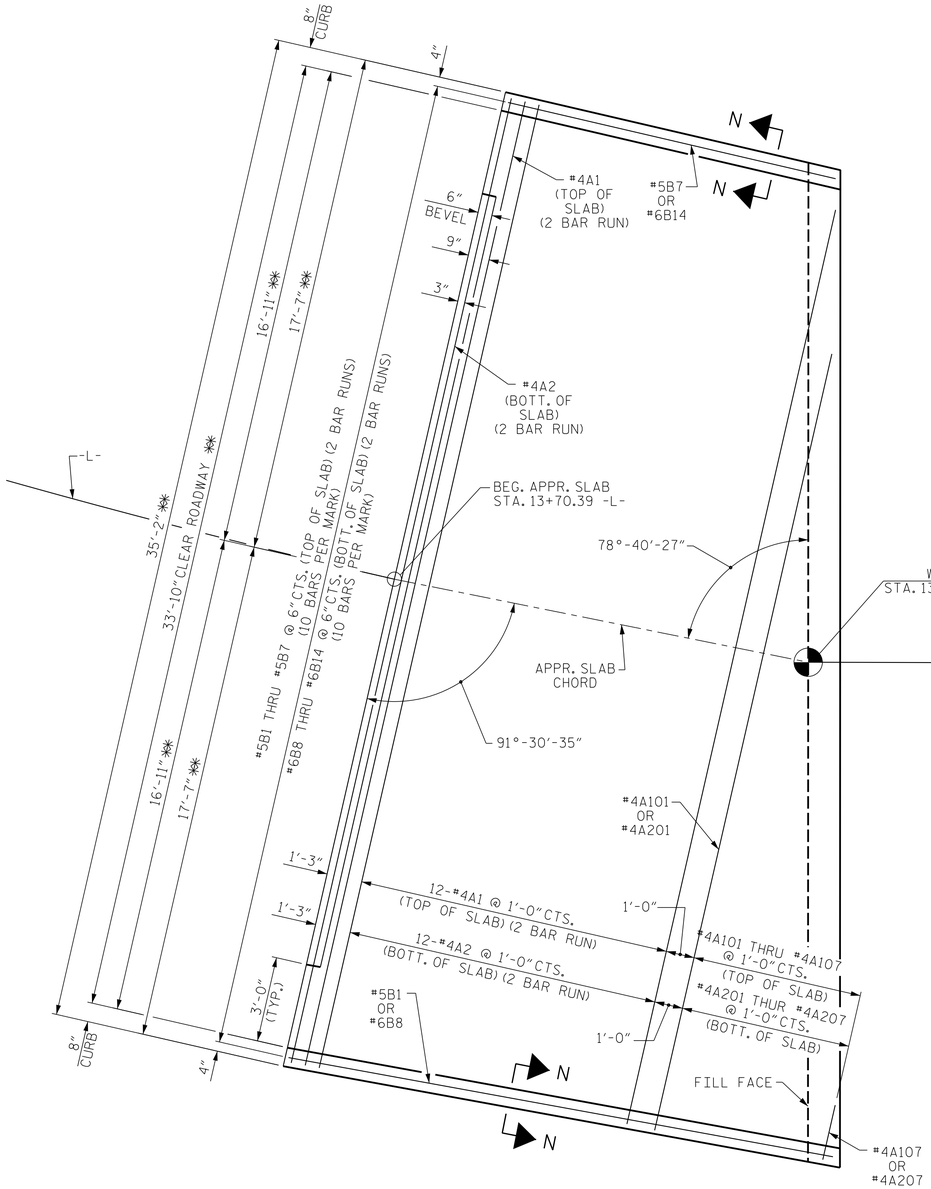

PLAN @ END BENT 1

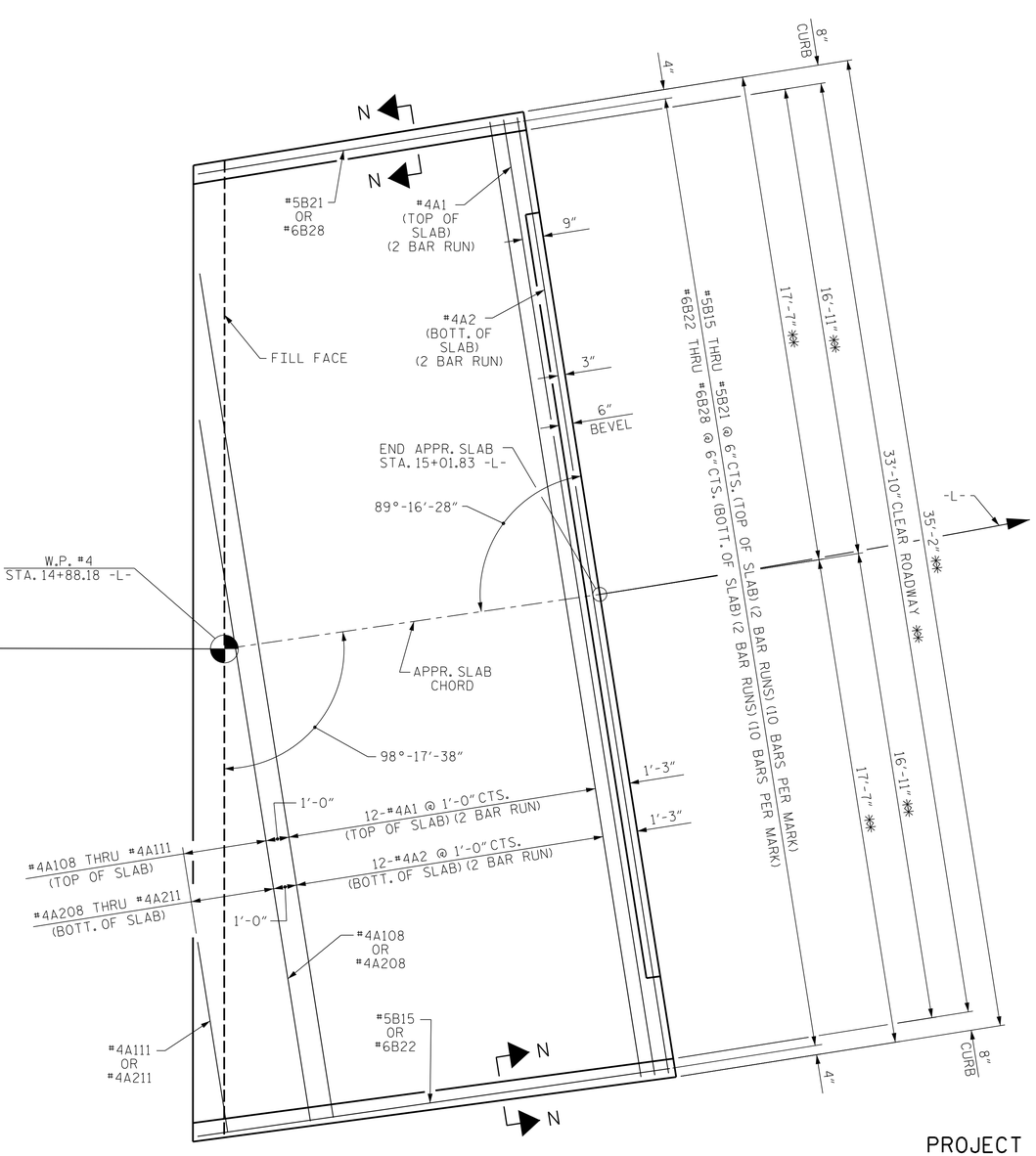

PLAN @ END BENT 2

✱✱ RADIAL DIMENSION

PROJECT NO. 17BP.6.R.69

COLUMBUS COUNTY

STATION: 14+36.50 -L-

SHEET 1 OF 2

ENGINEER OF RECORD

NORTH CAROLINA PROFESSIONAL SEAL 14091 5/11/2017 ENGINEER BUCK CHARLES HUNT

DocuSigned by: Buck Charles Hunt
2F15C83973BA4EC...

WETHERILL ENGINEERING
1223 Jones Franklin Rd.
Raleigh, N.C. 27606
Bus: 919 851 8077
Fax: 919 851 8107
LICENSE NO. F-0377

STATE OF NORTH CAROLINA
DEPARTMENT OF TRANSPORTATION
RALEIGH

BRIDGE APPROACH SLABS

REVISIONS						SHEET NO.
NO.	BY:	DATE:	NO.	BY:	DATE:	S-22
1			3			TOTAL SHEETS
2			4			23

DRAWN BY : B.C. HUNT DATE : 1-2017
CHECKED BY : G.M. GILLAND DATE : 1-2017

DOCUMENT NOT CONSIDERED FINAL UNLESS ALL SIGNATURES COMPLETED

P:\2016\161101_COLUMBUS_196\Structures\DGN\COLUMBUS 196 AS.dgn
5/10/2017 2:35:21 PM

DocuSign Envelope ID: 8C685FC1-CEF0-4ACA-9D8E-B3E25A2F004A

NOTES

FOR REINFORCED BRIDGE APPROACH FILL INCLUDING GEOTEXTILE, IMPERMEABLE GEOMEMBRANE, 4" Ø DRAINAGE PIPE, #78M STONE, AND SELECT MATERIAL, SEE ROADWAY PLANS.

AREA BETWEEN THE WINGWALL AND APPROACH SLAB SHALL BE GRADED TO DRAIN THE WATER AWAY FROM THE FILL FACE OF THE BRIDGE AND SHALL BE PAVED. SEE ROADWAY PLANS.

APPROACH SLAB GROOVING IS NOT REQUIRED.

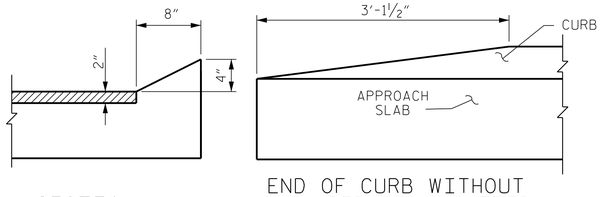

SECTION N-N

END OF CURB WITHOUT SHOULDER BERM GUTTER

CURB DETAILS

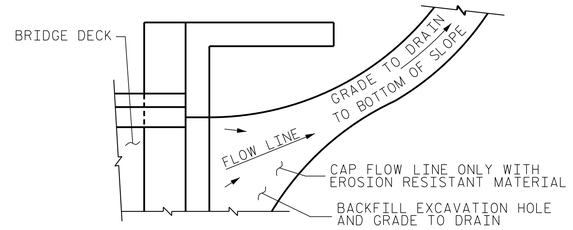

NOTE: IF THE APPROACH SLAB IS NOT CONSTRUCTED IMMEDIATELY AFTER THE BACKFILLING OF THE END BENT EXCAVATION, GRADE TO DRAIN TO THE BOTTOM OF THE SLOPE AND PROVIDE EROSION RESISTANT MATERIAL, SUCH AS FIBERGLASS ROVING OR AS DIRECTED BY THE ENGINEER TO PREVENT SOIL EROSION AND TO PROTECT THE AREA ADJACENT TO THE STRUCTURE. THE CONTRACTOR WILL BE REQUIRED TO REMOVE THESE MATERIALS PRIOR TO CONSTRUCTION OF THE APPROACH SLAB.

TEMPORARY DRAINAGE DETAIL

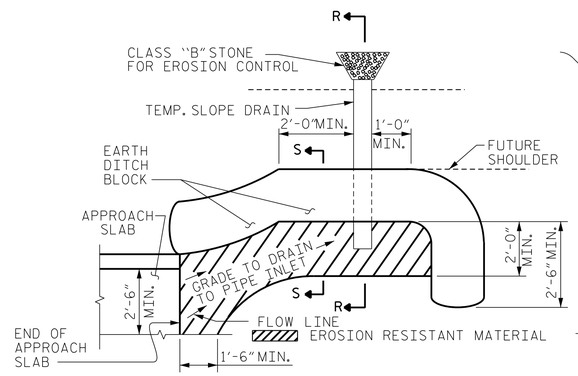

NOTE: IMMEDIATELY AFTER THE CONSTRUCTION OF THE APPROACH SLAB, THE CONTRACTOR SHALL PROVIDE TEMPORARY BERM AND SLOPE DRAIN. CONTRACTOR SHALL GRADE TO PIPE INLET AND PROVIDE EROSION RESISTANT MATERIAL AS SHOWN. THE EROSION RESISTANT MATERIAL SHALL BE EITHER 1) ASPHALT PLANT MIX, TYPE 1 OR TYPE 2, MIN. 2" DEPTH, 2) EROSION CONTROL MAT, OR 3) CONCRETE, AS DIRECTED BY THE ENGINEER. THE SLOPE DRAIN SHALL CONSIST OF A NON-PERFORATED TEMPORARY DRAINAGE PIPE, 12 INCHES IN DIAMETER.

PLAN VIEW

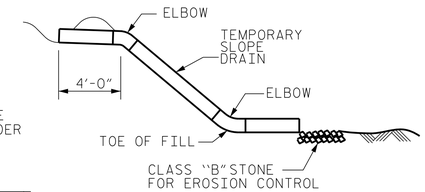

SECTION R-R

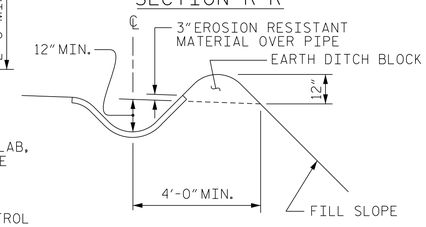

SECTION S-S

TEMPORARY BERM AND SLOPE DRAIN DETAILS

(TO BE USED WHEN SHOULDER BERM GUTTER IS REQUIRED)

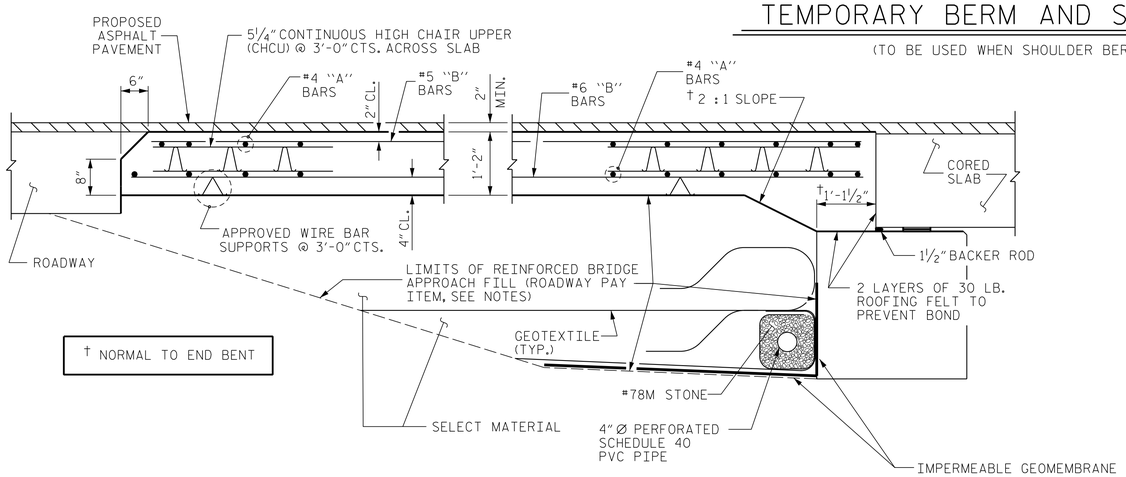

† NORMAL TO END BENT

SECTION THRU SLAB

BILL OF MATERIAL — APPROACH SLAB AT EB #1

BAR	NO.	SIZE	TYPE	LENGTH	WEIGHT
✳ A1	26	#4	STR	18'-5"	320
A2	26	#4	STR	18'-4"	318
✳A101	1	#4	STR	28'-6"	19
✳A102	1	#4	STR	24'-1"	16
✳A103	1	#4	STR	19'-8"	13
✳A104	1	#4	STR	15'-3"	10
✳A105	1	#4	STR	10'-10"	7
✳A106	1	#4	STR	6'-4"	4
✳A107	1	#4	STR	1'-11"	1
A201	1	#4	STR	28'-6"	19
A202	1	#4	STR	24'-1"	16
A203	1	#4	STR	19'-8"	13
A204	1	#4	STR	15'-3"	10
A205	1	#4	STR	10'-10"	7
A206	1	#4	STR	6'-4"	4
A207	1	#4	STR	1'-11"	1
✳ B1	20	#5	STR	10'-9"	224
✳ B2	20	#5	STR	10'-4"	216
✳ B3	20	#5	STR	9'-9"	203
✳ B4	20	#5	STR	9'-2"	191
✳ B5	20	#5	STR	8'-7"	179
✳ B6	20	#5	STR	8'-0"	167
✳ B7	20	#5	STR	7'-6"	156
B8	20	#6	STR	11'-2"	335
B9	20	#6	STR	10'-8"	320
B10	20	#6	STR	10'-1"	303
B11	20	#6	STR	9'-6"	285
B12	20	#6	STR	8'-11"	268
B13	20	#6	STR	8'-4"	250
B14	20	#6	STR	7'-9"	233
REINFORCING STEEL				LBS.	2382
✳ EPOXY COATED REINFORCING STEEL				LBS.	1726
CLASS AA CONCRETE				C. Y.	25.1

BILL OF MATERIAL — APPROACH SLAB AT EB #2

BAR	NO.	SIZE	TYPE	LENGTH	WEIGHT
✳ A1	26	#4	STR	18'-5"	320
A2	26	#4	STR	18'-4"	318
✳A108	1	#4	STR	25'-10"	17
✳A109	1	#4	STR	19'-6"	13
✳A110	1	#4	STR	13'-3"	9
✳A111	1	#4	STR	6'-11"	5
A208	1	#4	STR	25'-10"	17
A209	1	#4	STR	19'-6"	13
A210	1	#4	STR	13'-3"	9
A211	1	#4	STR	6'-11"	5
✳ B15	20	#5	STR	9'-7"	200
✳ B16	20	#5	STR	9'-3"	193
✳ B17	20	#5	STR	8'-10"	184
✳ B18	20	#5	STR	8'-6"	177
✳ B19	20	#5	STR	8'-1"	169
✳ B20	20	#5	STR	7'-8"	160
✳ B21	20	#5	STR	7'-3"	151
B22	20	#6	STR	10'-0"	300
B23	20	#6	STR	9'-7"	288
B24	20	#6	STR	9'-2"	275
B25	20	#6	STR	8'-9"	263
B26	20	#6	STR	8'-4"	250
B27	20	#6	STR	7'-11"	238
B28	20	#6	STR	7'-6"	225
REINFORCING STEEL				LBS.	2201
✳ EPOXY COATED REINFORCING STEEL				LBS.	1598
CLASS AA CONCRETE				C. Y.	23.3

SPLICE LENGTHS

BAR SIZE	EPOXY COATED	UNCOATED
#4	2'-0"	1'-9"
#5	2'-6"	2'-2"
#6	3'-10"	2'-7"

PROJECT NO. 17BP.6.R.69

COLUMBUS COUNTY

STATION: 14+36.50 -L-

SHEET 2 OF 2

ENGINEER OF RECORD

NORTH CAROLINA PROFESSIONAL SEAL 14091 5/11/2017 ENGINEER BUCK CHARLES HUNT

DocuSigned by: Buck Charles Hunt 2F15C83973BA4EC...

WETHERILL ENGINEERING
1223 Jones Franklin Rd.
Raleigh, N.C. 27606
Bus: 919 851 8077
Fax: 919 851 8107
LICENSE NO. F-0377

STATE OF NORTH CAROLINA
DEPARTMENT OF TRANSPORTATION
RALEIGH

BRIDGE APPROACH SLAB FOR PRESTRESSED CONCRETE CORED SLAB UNIT (SUB-REGIONAL TIER)

REVISIONS						SHEET NO.
NO.	BY:	DATE:	NO.	BY:	DATE:	S-23
1			3			TOTAL SHEETS
2			4			23

DRAWN BY : B.C. HUNT DATE : 1-2017
CHECKED BY : G.M. GILLAND DATE : 1-2017

DOCUMENT NOT CONSIDERED FINAL UNLESS ALL SIGNATURES COMPLETED

P:\2016\16151.01_COLUMBUS_196\Structures\DGN\COLUMBUS 196 AS.dgn
5/10/2017 2:37:06 PM

DocuSign Envelope ID: 8C685FC1-CEF0-4ACA-9D8E-B3E25A2F004A

STANDARD NOTES

DESIGN DATA:

SPECIFICATIONS	A.A.S.H.T.O. (CURRENT)
LIVE LOAD	SEE PLANS
IMPACT ALLOWANCE	SEE A.A.S.H.T.O.
STRESS IN EXTREME FIBER OF	
STRUCTURAL STEEL - AASHTO M270 GRADE 36	20,000 LBS. PER SQ. IN.
- AASHTO M270 GRADE 50W	27,000 LBS. PER SQ. IN.
- AASHTO M270 GRADE 50	27,000 LBS. PER SQ. IN.
REINFORCING STEEL IN TENSION	
GRADE 60	24,000 LBS. PER SQ. IN.
CONCRETE IN COMPRESSION	1,200 LBS. PER SQ. IN.
CONCRETE IN SHEAR	SEE A.A.S.H.T.O.
STRUCTURAL TIMBER - TREATED OR	
UNTREATED - EXTREME FIBER STRESS	1,800 LBS. PER SQ. IN.
COMPRESSION PERPENDICULAR TO GRAIN OF TIMBER	375 LBS. PER SQ. IN.
EQUIVALENT FLUID PRESSURE OF EARTH	30 LBS. PER CU. FT. (MINIMUM)

MATERIAL AND WORKMANSHIP:

EXCEPT AS MAY OTHERWISE BE SPECIFIED ON PLANS OR IN THE SPECIAL PROVISIONS, ALL MATERIAL AND WORKMANSHIP SHALL BE IN ACCORDANCE WITH THE 2012 "STANDARD SPECIFICATIONS FOR ROADS AND STRUCTURES" OF THE N. C. DEPARTMENT OF TRANSPORTATION.

STEEL SHEET PILING FOR PERMANENT OR TEMPORARY APPLICATIONS SHALL BE HOT ROLLED.

CONCRETE:

UNLESS OTHERWISE REQUIRED ON PLANS, CLASS A CONCRETE SHALL BE USED FOR ALL PORTIONS OF ALL STRUCTURES WITH THE EXCEPTION THAT: CLASS AA CONCRETE SHALL BE USED IN BRIDGE SUPERSTRUCTURES, ABUTMENT BACKWALLS, AND APPROACH SLABS; AND CLASS B CONCRETE SHALL BE USED FOR SLOPE PROTECTION AND RIP RAP.

CONCRETE CHAMFERS:

UNLESS OTHERWISE NOTED ON THE PLANS, ALL EXPOSED CORNERS ON STRUCTURES SHALL BE CHAMFERED 3/4" WITH THE FOLLOWING EXCEPTIONS: TOP CORNERS OF CURBS MAY BE ROUNDED TO 1-1/2" RADIUS WHICH IS BUILT INTO CURB FORMS; CORNERS OF TRANSVERSE FLOOR EXPANSION JOINTS SHALL BE ROUNDED WITH A 1/4" FINISHING TOOL UNLESS OTHERWISE REQUIRED ON PLANS; AND CORNERS OF EXPANSION JOINTS IN THE ROADWAY FACES AND TOPS OF CURBS AND SIDEWALKS SHALL BE ROUNDED TO A 1/4" RADIUS WITH A FINISHING STONE OR TOOL UNLESS OTHERWISE REQUIRED ON PLANS.

DOWELS:

DOWELS WHEN INDICATED ON PLANS AS FOR CULVERT EXTENSIONS, SHALL BE EMBEDDED AT LEAST 12" INTO THE OLD CONCRETE AND GROUTED INTO PLACE WITH 1:2 CEMENT MORTAR.

ALLOWANCE FOR DEAD LOAD DEFLECTION, SETTLEMENT, ETC. IN CASTING SUPERSTRUCTURES:

BRIDGES SHALL BE BUILT ON THE GRADE OR VERTICAL CURVE SHOWN ON PLANS. SLABS, CURBS AND PARAPETS SHALL CONFORM TO THE GRADE OR CURVE.

ALL DIMENSIONS WHICH ARE GIVEN IN SECTION AND ARE AFFECTED BY DEAD LOAD DEFLECTIONS ARE DIMENSIONS AT CENTER LINE OF BEARING UNLESS OTHERWISE NOTED ON PLANS. IN SETTING FORMS FOR STEEL BEAM BRIDGES AND PRESTRESSED CONCRETE GIRDER BRIDGES, ADJUSTMENTS SHALL BE MADE DUE TO THE DEAD LOAD DEFLECTIONS FOR THE ELEVATIONS SHOWN. WHERE BLOCKS ARE SHOWN OVER BEAMS FOR BUILDING UP TO THE SLAB, THE VERTICAL DIMENSIONS OF THE BLOCKS SHALL BE ADJUSTED BETWEEN BEARINGS TO COMPENSATE FOR DEAD LOAD DEFLECTIONS, VERTICAL CURVE ORDINATE, AND ACTUAL BEAM CAMBER. WHERE BOTTOM OF SLAB IS IN LINE WITH BOTTOM OF TOP FLANGES, DEPTH OF SLAB BETWEEN BEARINGS SHALL BE ADJUSTED TO COMPENSATE FOR DEAD LOAD DEFLECTION, VERTICAL CURVE ORDINATE, AND ACTUAL BEAM CAMBER.

IN SETTING FALSEWORK AND FORMS FOR REINFORCED CONCRETE SPANS, AN ALLOWANCE SHALL BE MADE FOR DEAD LOAD DEFLECTIONS, SETTLEMENT OF FALSEWORK, AND PERMANENT CAMBER WHICH SHALL BE PROVIDED FOR IN ADDITION TO THE ELEVATIONS SHOWN. AFTER REMOVAL OF THE FALSEWORK, THE FINISHED STRUCTURES SHALL CONFORM TO THE PROFILE AND ELEVATIONS SHOWN ON THE PLANS AND CONSTRUCTION ELEVATIONS FURNISHED BY THE ENGINEER.

DETAILED DRAWINGS FOR FALSEWORK OR FORMS FOR BRIDGE SUPERSTRUCTURE AND ANY STRUCTURE OR PARTS OF A STRUCTURE AS NOTED ON THE PLANS SHALL BE SUBMITTED TO THE ENGINEER FOR APPROVAL BEFORE CONSTRUCTION OF THE FALSEWORK OR FORMS IS STARTED.

REINFORCING STEEL:

ALL REINFORCING STEEL SHALL BE DEFORMED. DIMENSIONS RELATIVE TO PLACEMENT OF REINFORCING ARE TO CENTERS OF BARS UNLESS OTHERWISE INDICATED IN THE PLANS. DIMENSIONS ON BAR DETAILS ARE TO CENTERS OF BARS OR ARE OUT TO OUT AS INDICATED ON PLANS.

WIRE BAR SUPPORTS SHALL BE PROVIDED FOR REINFORCING STEEL WHERE INDICATED ON THE PLANS. WHEN BAR SUPPORT PIECES ARE PLACED IN CONTINUOUS LINES, THEY SHALL BE SO PLACED THAT THE ENDS OF THE SUPPORTING WIRES SHALL BE LAPPED TO LOCK LEGS ON ADJOINING PIECES.

STRUCTURAL STEEL:

AT THE CONTRACTOR'S OPTION, HE MAY SUBSTITUTE 7/8" Ø SHEAR STUDS FOR THE ¾" Ø STUDS SPECIFIED ON THE PLANS. THIS SUBSTITUTION SHALL BE MADE AT THE RATE OF 3 - 7/8" Ø STUDS FOR 4 - 3/4" Ø STUDS, AND STUD SPACING CHANGES SHALL BE MADE AS NECESSARY TO PROVIDE THE SAME EQUIVALENT NUMBER OF 7/8" Ø STUDS ALONG THE BEAM AS SHOWN FOR 3/4" Ø STUDS BASED ON THE RATIO OF 3 - 7/8" Ø STUDS FOR 4 - 3/4" Ø STUDS. STUDS OF THE LENGTH SPECIFIED ON THE PLANS MUST BE PROVIDED. THE MAXIMUM SPACING SHALL BE 2'-0".

EXCEPT AT THE INTERIOR SUPPORTS OF CONTINUOUS BEAMS WHERE THE COVER PLATE IS IN CONTACT WITH BEARING PLATE, THE CONTRACTOR MAY, AT HIS OPTION, SUBSTITUTE FOR THE COVER PLATES DESIGNATED ON THE PLANS COVER PLATES OF THE EQUIVALENT AREA PROVIDED THESE PLATES ARE AT LEAST 5/16" IN THICKNESS AND DO NOT EXCEED A WIDTH EQUAL TO THE FLANGE WIDTH LESS 2" OR A THICKNESS EQUAL TO 2 TIMES THE FLANGE THICKNESS. THE SIZE OF FILLET WELDS SHALL CONFORM TO THE REQUIREMENTS OF THE CURRENT ANSI/AASHTO/AWS "BRIDGE WELDING CODE". ELECTROSLAG WELDING WILL NOT BE PERMITTED.

WITH THE SOLE EXCEPTION OF EDGES AT SURFACES WHICH BEAR ON OTHER SURFACES, ALL SHARP EDGES AND ENDS OF SHAPES AND PLATES SHALL BE SLIGHTLY ROUNDED BY SUITABLE MEANS TO A RADIUS OF APPROXIMATELY 1/16 INCH OR EQUIVALENT FLAT SURFACE AT A SUITABLE ANGLE PRIOR TO PAINTING, GALVANIZING, OR METALLIZING.

HANDRAILS AND POSTS:

METAL STANDARDS AND FACES OF THE CONCRETE END POSTS FOR THE METAL RAIL SHALL BE SET NORMAL TO THE GRADE OF THE CURB, UNLESS OTHERWISE SHOWN ON PLANS. THE METAL RAIL AND TOPS OF CONCRETE POSTS USED WITH THE ALUMINUM RAIL SHALL BE BUILT PARALLEL TO THE GRADE OF THE CURB.

METAL HANDRAILS SHALL BE IN ACCORDANCE WITH THE PLANS. RAILS SHALL BE AS MANUFACTURED FOR BRIDGE RAILING. CASTINGS SHALL BE OF A UNIFORM APPEARANCE. FINS AND OTHER DEFORMATIONS RESULTING FROM CASTING OR OTHERWISE SHALL BE REMOVED IN A MANNER SO THAT A UNIFORM COLORING OF THE COMPLETED CASTING SHALL BE OBTAINED. CASTINGS WITH DISCOLORATIONS OR OF NON-UNIFORM COLORING WILL NOT BE ACCEPTED. CERTIFIED MILL REPORTS ARE REQUIRED FOR METAL RAILS AND POSTS.

SPECIAL NOTES:

GENERALLY, IN CASE OF DISCREPANCY, THIS STANDARD SHEET OF NOTES SHALL GOVERN OVER THE SPECIFICATIONS, BUT THE REMAINDER OF THE PLANS SHALL GOVERN OVER NOTES HEREON, AND SPECIAL PROVISIONS SHALL GOVERN OVER ALL. SEE SPECIFICATIONS ARTICLE 105-4.

ENGLISH

JANUARY, 1990

STD. NO. SN