This electronic collection of documents is provided for the convenience of the user and is Not a Certified Document –

The documents contained herein were originally issued and sealed by the individuals whose names and license numbers appear on each page, on the dates appearing with their signature on that page.
This file or an individual page shall not be considered a certified document.

DocuSign Envelope ID: D1E0CF5D-1E7B-464C-8C13-C6789E32317D

TIP PROJECT: 17BP.7.R.90

CONTRACT:

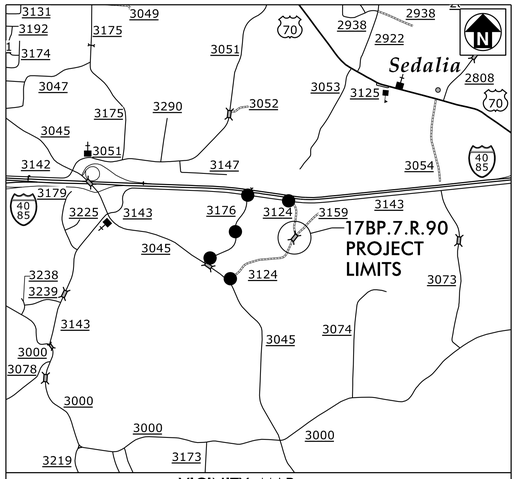

VICINITY MAP
(NOT TO SCALE)
OFF-SITE DETOUR

STATE OF NORTH CAROLINA
DIVISION OF HIGHWAYS

GUILFORD COUNTY

STATE	STATE PROJECT REFERENCE NO.	SHEET NO.	TOTAL SHEETS
N.C.	17BP.7.R.90	1	

STATE PROJECT NO.	F.A. PROJ. NO.	DESCRIPTION

LOCATION: BRIDGE NO.210 OVER LITTLE ALAMANCE CREEK ON SR 3124 (STEWART MILL ROAD)

TYPE OF WORK: GRADING, PAVING, DRAINAGE AND STRUCTURE

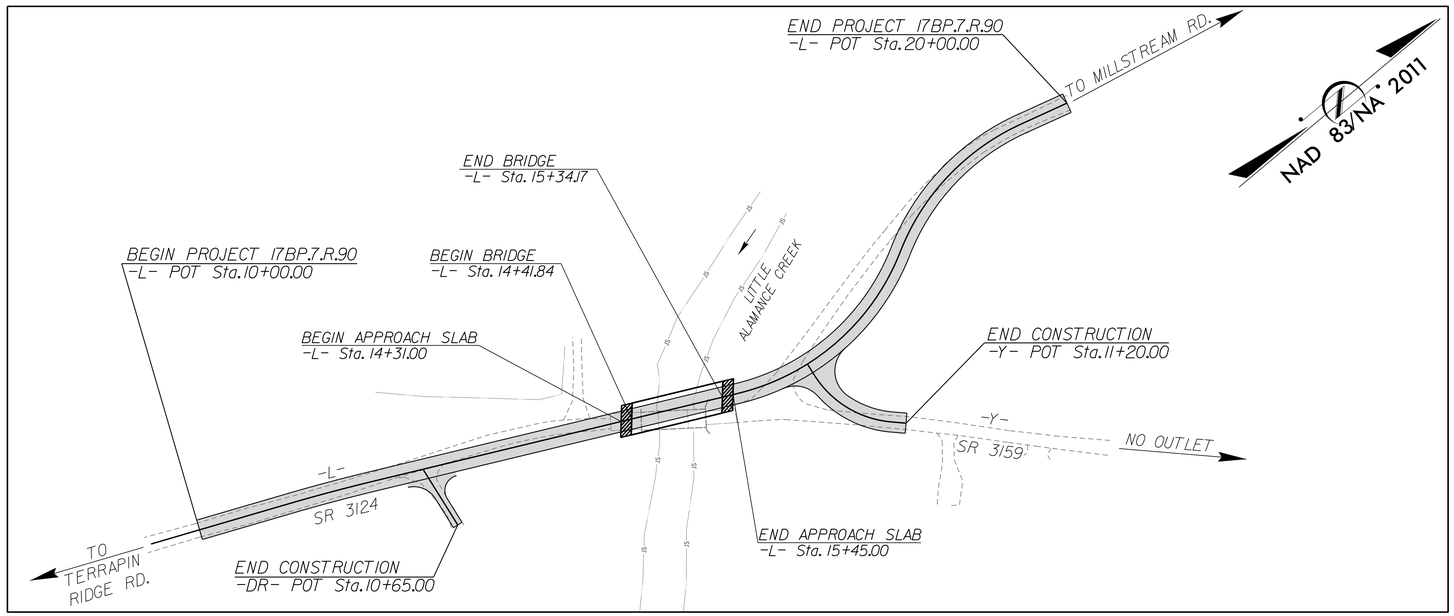

*DESIGN EXCEPTION:
MIN. HORIZONTAL CURVE RADIUS
SAG VERTICAL CURVE K
HORIZONTAL SSD
VERTICAL SSD

DOCUMENT NOT CONSIDERED FINAL
UNLESS ALL SIGNATURES COMPLETED

STATE OF NORTH CAROLINA DEPARTMENT OF TRANSPORTATION

DESIGN DATA

ADT 2000 = 100
ADT 2025 = 200

V = 35 MPH

SUB REGIONAL TIER
LOCAL

PROJECT LENGTH

LENGTH ROADWAY TIP PROJECT	=	0.195 MILES
LENGTH STRUCTURE TIP PROJECT	=	0.017 MILES
TOTAL LENGTH TIP PROJECT	=	0.212 MILES

Prepared in the Office of Mott MacDonald for
DIVISION 7
NORTH CAROLINA DEPARTMENT OF TRANSPORTATION

2018 STANDARD SPECIFICATIONS

LETTING DATE:

TIM JORDAN, PE
PROJECT ENGINEER

DAVID FUH, PE
HYDRAULICS ENGINEER

NCDOT CONTACT: TIM POWERS, PE
DIVISION BRIDGE PROGRAM MANAGER

ROADWAY DESIGN ENGINEER
NORTH CAROLINA PROFESSIONAL SEAL 21102 ENGINEER TIMOTHY JOSEPH JORDAN
DocuSigned by: James Timothy Jordan 2/7/2018
SIGNATURE: P.E.

HYDRAULICS ENGINEER
NORTH CAROLINA PROFESSIONAL SEAL 19732 ENGINEER SHIH-CHEN FUH
DocuSigned by: Shihchen Fuh 2/8/2018
SIGNATURE: P.E.

PLANS PREPARED BY:

MOTT MACDONALD
PO Box 700
Fuquay-Varina, NC 27526
(919) 552-2253
(919) 552-2254 (Fax)
www.mottmac.com

LICENSE NO. F-0669

HDR Engineering, Inc. of the Carolinas
555 Fayetteville St, Suite 900 Raleigh, N.C. 27601
N.C.B.E.L.S. License Number: F-0116

2/7/2018
9:16:13 AM
R:\Roadway\Proj\400210_rdy_tsh.dgn
jor-66165

DocuSign Envelope ID: 2B23A76F-2081-4E6D-88BC-64B5D93F78A1

PROJECT REFERENCE	SHEET NO.
17BP.7.R.90 – GUILFORD 210	1A

ROADWAY DESIGN ENGINEER

NORTH CAROLINA PROFESSIONAL SEAL 21102 ENGINEER

Signed by: DocuSigned by: James Timothy Tomlinson 4/5/2018

MOTT MACDONALD I & E, LLC
LICENSE NO. F-0669

DOCUMENT NOT CONSIDERED FINAL UNLESS ALL SIGNATURES COMPLETED

Prepared in the Office of:

MOTT MACDONALD
PO Box 700
Fuquay-Varina, NC 27526
www.mottmac.com

GENERAL NOTES:

2018 SPECIFICATIONS
EFFECTIVE: 01-16-2018

GRADE LINE:
GRADING AND SURFACING:

THE GRADE LINES SHOWN DENOTE THE FINISHED ELEVATION OF THE PROPOSED SURFACING AT GRADE POINTS SHOWN ON THE TYPICAL SECTIONS. GRADE LINES MAY BE ADJUSTED AT THEIR BEGINNING AND ENDING AND AT STRUCTURES AS DIRECTED BY THE ENGINEER IN ORDER TO SECURE A PROPER TIE-IN.

CLEARING:

CLEARING ON THIS PROJECT SHALL BE PERFORMED TO THE LIMITS ESTABLISHED BY METHOD II.

SUPERELEVATION:

ALL CURVES ON THIS PROJECT SHALL BE SUPERELEVATED IN ACCORDANCE WITH STD. NO. 225.04 USING THE RATE OF SUPERELEVATION AND RUNOFF SHOWN ON THE PLANS. SUPERELEVATION IS TO BE REVOLVED ABOUT THE GRADE POINTS SHOWN ON THE TYPICAL SECTIONS.

SHOULDER CONSTRUCTION:

ASPHALT, EARTH, AND CONCRETE SHOULDER CONSTRUCTION ON THE HIGH SIDE OF SUPERELEVATED CURVES SHALL BE IN ACCORDANCE WITH STD. NO. 560.01

GUARDRAIL:

THE GUARDRAIL LOCATIONS SHOWN ON THE PLANS MAY BE ADJUSTED DURING CONSTRUCTION AS DIRECTED BY THE ENGINEER. THE CONTRACTOR SHOULD CONSULT WITH THE ENGINEER PRIOR TO ORDERING GUARDRAIL MATERIAL.

SUBSURFACE PLANS:

NO SUBSURFACE PLANS ARE AVAILABLE ON THIS PROJECT. THE CONTRACTOR SHOULD MAKE HIS OWN INVESTIGATION AS TO THE SUBSURFACE CONDITIONS.

END BENTS:

THE ENGINEER SHALL CHECK THE STRUCTURE END BENT PLANS, DETAILS, AND CROSS-SECTION PRIOR TO SETTING OF THE SLOPE STAKES FOR THE EMBANKMENT OR EXCAVATION APPROACHING A BRIDGE.

UTILITIES:

UTILITY OWNERS ON THIS PROJECT ARE DUKE ENERGY AND BELL SOUTH.

ANY RELOCATION OF EXISTING UTILITIES WILL BE ACCOMPLISHED BY OTHERS.

INDEX OF SHEETS

SHEET NUMBER	DESCRIPTION
1	TITLE SHEET
1A	INDEX OF SHEETS, GENERAL NOTES, AND LIST OF STANDARD DRAWINGS
1B	CONVENTIONAL SYMBOLS
1C-1 THRU 1C-2	SURVEY CONTROL SHEETS
2A	PAVEMENT SCHEDULE AND TYPICAL SECTIONS
2C-1	GUARDRAIL INSTALLATION
2C-2	STRUCTURE ANCHOR UNITS
3	GUARDRAIL, DRAINAGE, & EARTHWORK SUMMARY
4	PLAN SHEET AND PROFILE SHEET
TMP-1 THRU TMP-3	TRAFFIC MANAGEMENT PLANS
EC-1 THRU EC-5	EROSION CONTROL PLANS
RF-1	REFORESTATION DETAIL
UO-1	UTILITIES BY OTHERS PLAN
X-1 THRU X-8	CROSS-SECTIONS
S-1 THRU S-19	STRUCTURE PLANS
SN	STRUCTURE NOTES

EFF. 01-16-2018

2018 ROADWAY ENGLISH STANDARD DRAWINGS

The following Roadway Standards as appear in "Roadway Standard Drawings" Highway Design Branch - N. C. Department of Transportation - Raleigh, N. C., Dated January, 2018 are applicable to this project and by reference hereby are considered a part of these plans:

STD.NO.	TITLE
DIVISION 2 - EARTHWORK	
200.02	Method of Clearing - Method II
225.02	Guide for Grading Subgrade - Secondary and Local
225.04	Method of Obtaining Superelevation - Two Lane Pavement
DIVISION 3 - PIPE CULVERTS	
300.01	Method of Pipe Installation
310.10	Driveway Pipe Construction
DIVISION 4 - MAJOR STRUCTURES	
422.02	Type II Modified Approach Fills
DIVISION 5 - SUBGRADE, BASES AND SHOULDERS	
560.01	Method of Shoulder Construction - High Side of Superelevated Curve - Method I
DIVISION 8 - INCIDENTALS	
840.00	Concrete Base Pad for Drainage Structures
840.25	Anchorage for Frames - Brick or Concrete or Precast
840.29	Frames and Narrow Slot Flat Grates
840.35	Traffic Bearing Grated Drop Inlet - for Cast Iron Double Frame and Grates
840.46	Traffic Bearing Precast Drainage Structure
840.66	Drainage Structure Steps
846.01	Concrete Curb, Gutter and Curb & Gutter
846.04	Drop Inlet Installation in Shoulder Berm Gutter
862.01	Guardrail Placement
862.02	Guardrail Installation
876.01	Rip Rap in Channels
876.02	Guide for Rip Rap at Pipe Outlets

jor66165
R:\Roadway\Proj\400210_rdy_psh1A.dgn
4/5/2018 7:14:03 AM

PROJECT REFERENCE	SHEET NO.
17BP.7.R.90 – GUILFORD 210	1B

STATE OF NORTH CAROLINA
DIVISION OF HIGHWAYS

CONVENTIONAL PLAN SHEET SYMBOLS

Note: Not to Scale

***S.U.E. = Subsurface Utility Engineering**

BOUNDARIES AND PROPERTY:

- State Line
- County Line
- Township Line
- City Line
- Reservation Line
- Property Line
- Existing Iron Pin — EIP
- Property Corner
- Property Monument — ECM
- Parcel/Sequence Number — 123
- Existing Fence Line
- Proposed Woven Wire Fence
- Proposed Chain Link Fence
- Proposed Barbed Wire Fence
- Existing Wetland Boundary — WLB
- Proposed Wetland Boundary — WLB
- Existing Endangered Animal Boundary — EAB
- Existing Endangered Plant Boundary — EPB
- Existing Historic Property Boundary — HPB
- Known Contamination Area: Soil
- Potential Contamination Area: Soil
- Known Contamination Area: Water
- Potential Contamination Area: Water
- Contaminated Site: Known or Potential

BUILDINGS AND OTHER CULTURE:

- Gas Pump Vent or U/G Tank Cap
- Sign — S
- Well — W
- Small Mine
- Foundation
- Area Outline
- Cemetery
- Building
- School
- Church
- Dam

HYDROLOGY:

- Stream or Body of Water
- Hydro, Pool or Reservoir
- Jurisdictional Stream — JS
- Buffer Zone 1 — BZ 1
- Buffer Zone 2 — BZ 2
- Flow Arrow
- Disappearing Stream
- Spring
- Wetland
- Proposed Lateral, Tail, Head Ditch — FLOW
- False Sump

RAILROADS:

- Standard Gauge — CSX TRANSPORTATION
- RR Signal Milepost — MILEPOST 35
- Switch — SWITCH
- RR Abandoned
- RR Dismantled

RIGHT OF WAY:

- Baseline Control Point
- Existing Right of Way Marker
- Existing Right of Way Line
- Proposed Right of Way Line — RW
- Proposed Right of Way Line with Iron Pin and Cap Marker — RW
- Proposed Right of Way Line with Concrete or Granite R/W Marker — RW
- Proposed Control of Access Line with Concrete C/A Marker — CA
- Existing Control of Access — CA
- Proposed Control of Access — CA
- Existing Easement Line — E
- Proposed Temporary Construction Easement — E
- Proposed Temporary Drainage Easement — TDE
- Proposed Permanent Drainage Easement — PDE
- Proposed Permanent Drainage / Utility Easement — DUE
- Proposed Permanent Utility Easement — PUE
- Proposed Temporary Utility Easement — TUE
- Proposed Aerial Utility Easement — AUE
- Proposed Permanent Easement with Iron Pin and Cap Marker

ROADS AND RELATED FEATURES:

- Existing Edge of Pavement
- Existing Curb
- Proposed Slope Stakes Cut — C
- Proposed Slope Stakes Fill — F
- Proposed Curb Ramp — CR
- Existing Metal Guardrail
- Proposed Guardrail
- Existing Cable Guiderail
- Proposed Cable Guiderail
- Equality Symbol
- Pavement Removal

VEGETATION:

- Single Tree
- Single Shrub
- Hedge
- Woods Line
- Orchard
- Vineyard — Vineyard

EXISTING STRUCTURES:

MAJOR:

- Bridge, Tunnel or Box Culvert — CONC
- Bridge Wing Wall, Head Wall and End Wall — CONC WW

MINOR:

- Head and End Wall — CONC HW
- Pipe Culvert
- Footbridge
- Drainage Box: Catch Basin, DI or JB — CB
- Paved Ditch Gutter
- Storm Sewer Manhole — S
- Storm Sewer — S

UTILITIES:

POWER:

- Existing Power Pole
- Proposed Power Pole
- Existing Joint Use Pole
- Proposed Joint Use Pole
- Power Manhole — P
- Power Line Tower
- Power Transformer
- U/G Power Cable Hand Hole
- H-Frame Pole
- U/G Power Line LOS B (S.U.E.*) — P
- U/G Power Line LOS C (S.U.E.*) — P
- U/G Power Line LOS D (S.U.E.*) — P

TELEPHONE:

- Existing Telephone Pole
- Proposed Telephone Pole
- Telephone Manhole — T
- Telephone Pedestal — T
- Telephone Cell Tower
- U/G Telephone Cable Hand Hole — HH
- U/G Telephone Cable LOS B (S.U.E.*) — T
- U/G Telephone Cable LOS C (S.U.E.*) — T
- U/G Telephone Cable LOS D (S.U.E.*) — T
- U/G Telephone Conduit LOS B (S.U.E.*) — TC
- U/G Telephone Conduit LOS C (S.U.E.*) — TC
- U/G Telephone Conduit LOS D (S.U.E.*) — TC
- U/G Fiber Optics Cable LOS B (S.U.E.*) — T FO
- U/G Fiber Optics Cable LOS C (S.U.E.*) — T FO
- U/G Fiber Optics Cable LOS D (S.U.E.*) — T FO

WATER:

- Water Manhole — W
- Water Meter
- Water Valve
- Water Hydrant
- U/G Water Line LOS B (S.U.E*) — W
- U/G Water Line LOS C (S.U.E*) — W
- U/G Water Line LOS D (S.U.E*) — W
- Above Ground Water Line — A/G Water

TV:

- TV Pedestal — C
- TV Tower
- U/G TV Cable Hand Hole — HH
- U/G TV Cable LOS B (S.U.E.*) — TV
- U/G TV Cable LOS C (S.U.E.*) — TV
- U/G TV Cable LOS D (S.U.E.*) — TV
- U/G Fiber Optic Cable LOS B (S.U.E.*) — TV FO
- U/G Fiber Optic Cable LOS C (S.U.E.*) — TV FO
- U/G Fiber Optic Cable LOS D (S.U.E.*) — TV FO

GAS:

- Gas Valve
- Gas Meter
- U/G Gas Line LOS B (S.U.E.*) — G
- U/G Gas Line LOS C (S.U.E.*) — G
- U/G Gas Line LOS D (S.U.E.*) — G
- Above Ground Gas Line — A/G Gas

SANITARY SEWER:

- Sanitary Sewer Manhole
- Sanitary Sewer Cleanout
- U/G Sanitary Sewer Line — SS
- Above Ground Sanitary Sewer — A/G Sanitary Sewer
- SS Forced Main Line LOS B (S.U.E.*) — FSS
- SS Forced Main Line LOS C (S.U.E.*) — FSS
- SS Forced Main Line LOS D (S.U.E.*) — FSS

MISCELLANEOUS:

- Utility Pole
- Utility Pole with Base
- Utility Located Object
- Utility Traffic Signal Box — S
- Utility Unknown U/G Line LOS B (S.U.E.*) — ?UTL
- U/G Tank; Water, Gas, Oil
- Underground Storage Tank, Approx. Loc. — UST
- A/G Tank; Water, Gas, Oil
- Geoenvironmental Boring
- U/G Test Hole LOS A (S.U.E.*)
- Abandoned According to Utility Records — AATUR
- End of Information — E.O.I.

jor66165
R:\Roadway\Proj\1400210_rdy_pshtB.dgn
2/7/2018 9:16:19 AM

PROJECT REFERENCE NO.	SHEET NO.
17BP.7.R.90	1C–1
Location and Surveys	

40–0210 SURVEY CONTROL SHEET

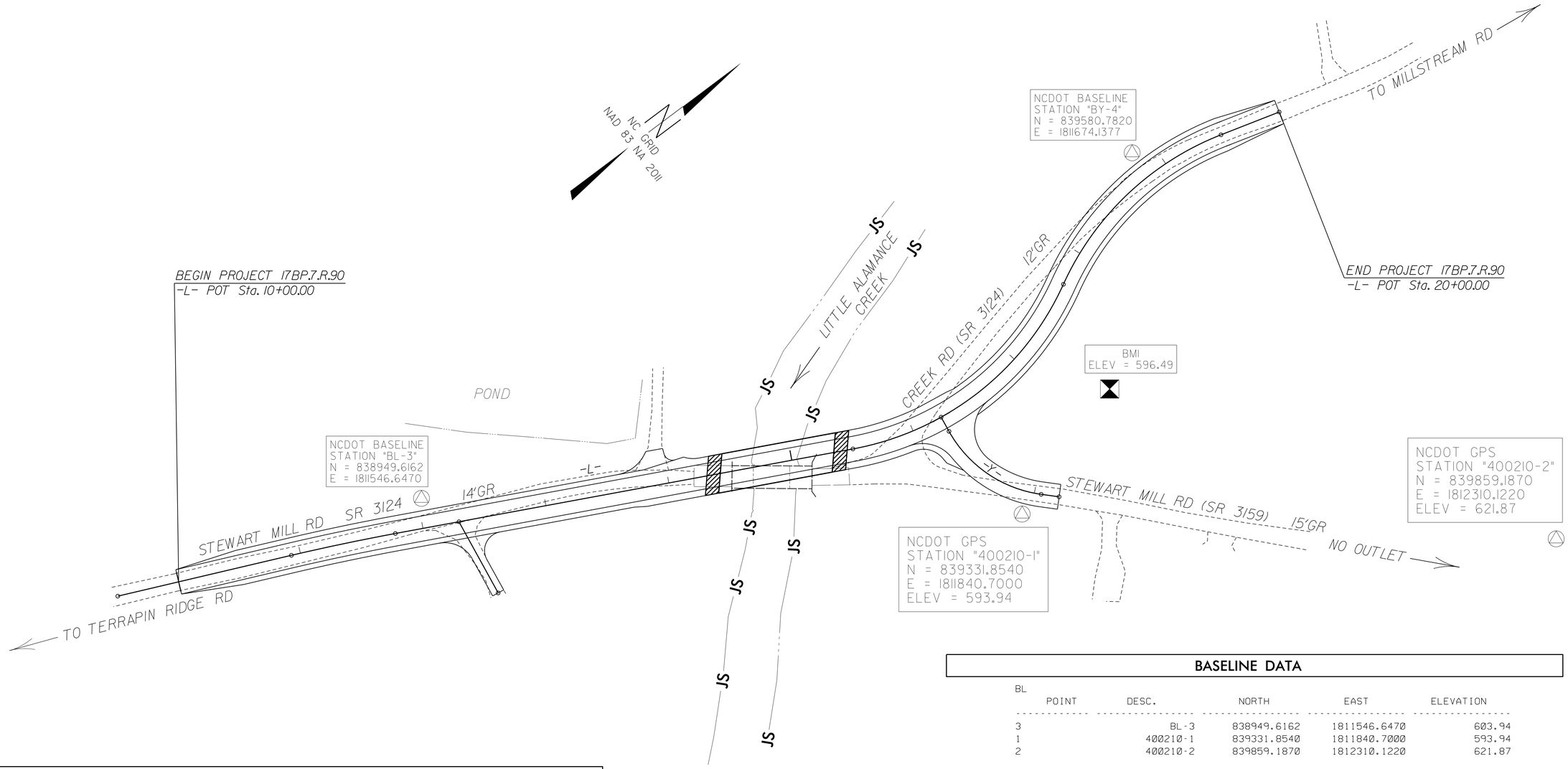

BASELINE DATA

BL

POINT	DESC.	NORTH	EAST	ELEVATION
3	BL-3	838949.6162	1811546.6470	603.94
1	400210-1	839331.8540	1811840.7000	593.94
2	400210-2	839859.1870	1812310.1220	621.87

BY

POINT	DESC.	NORTH	EAST	ELEVATION
4		839580.7820	1811674.1377	600.64
A1		839331.8540	1811840.7000	593.94

NOTES

1. *THE CONTROL DATA FOR THIS PROJECT CAN BE FOUND ELECTRONICALLY BY SELECTING PROJECT CONTROL DATA AT:*
HTTP:/WWW.DOH.DOT.STATE.NC.US/PRECONSTRUCT/HIGHWAY/LOCATION/PROJECT/

THE FILES TO BE FOUND ARE AS FOLLOWS:
400210_ls_control.txt

SITE CALIBRATION INFORMATION HAS NOT BEEN PROVIDED FOR THIS PROJECT. IF FURTHER INFORMATION IS NEEDED, PLEASE CONTACT THE LOCATION AND SURVEYS UNIT.

INDICATES GEODETIC CONTROL MONUMENTS USED OR SET FOR HORIZONTAL PROJECT CONTROL BY THE NCDOT LOCATION AND SURVEYS UNIT.

PROJECT CONTROL ESTABLISHED USING GLOBAL POSITIONING SYSTEM.

DATUM DESCRIPTION

THE LOCALIZED COORDINATE SYSTEM DEVELOPED FOR THIS PROJECT IS BASED ON THE STATE PLANE COORDINATES ESTABLISHED BY NCGS FOR MONUMENT "400210-1"
WITH NAD 83/NA 2011 STATE PLANE GRID COORDINATES OF
NORTHING: 839331.854(ft) EASTING: 1811840.700(ft)
ELEVATION: 593.94(ft)
THE AVERAGE COMBINED GRID FACTOR USED ON THIS PROJECT (GROUND TO GRID) IS: 0.9999470343
THE N.C. LAMBERT GRID BEARING AND LOCALIZED HORIZONTAL GROUND DISTANCE FROM "400210-1" TO -L- STATION 10+00.00 IS
S 32°03'51.7"E DISTANCE: 677.06(ft)
ALL LINEAR DIMENSIONS ARE LOCALIZED HORIZONTAL DISTANCES
VERTICAL DATUM USED IS NAVD 88

BENCHMARK DATA

```
****************************************
BM1        ELEVATION = 596.49
N 839446       E 1811805
BL STATION 10+44.00 103 LEFT
NAIL IN 20" POPLAR
****************************************
```

NOTE: DRAWING NOT TO SCALE

12/01/2005

8:45:58 AM
R:\Roadway\Proj\400210_ls_lc-1.dgn
jo-68165

40–0210 SURVEY CONTROL SHEET

L

TYPE	STATION	NORTH	EAST
POT	9+50.00	838712.2794	1811461.1987
PC	10+92.63	838842.9160	1811518.4440
PT	11+77.53	838919.8267	1811554.3818
PC	15+49.69	839253.0966	1811720.0147
PRC	17+71.91	839466.8040	1811715.7924
PT	19+50.00	839639.3692	1811695.8142
POT	20+00.00	839687.5501	1811709.1606

Y

TYPE	STATION	NORTH	EAST
POT	10+00.00	839324.7642	1811742.0451
PC	10+13.00	839323.0116	1811754.9268
PT	11+05.52	839351.7154	1811839.4441
POT	11+20.00	839361.9986	1811849.6328

-L- NEW FINAL R/W MONUMENTS

ALIGN	STATION	OFFSET	NORTH	EAST
L	10+49.25	30.36	838791.0018	1811528.8469
L	10+50.74	40.00	838788.4945	1811538.2683
L	10+92.63	40.00	838826.8616	1811555.0808
L	11+77.53	40.00	838902.0244	1811590.2019
L	13+65.00	40.00	839069.9043	1811673.6371
L	14+05.00	-33.97	839138.6440	1811625.2018
L	15+22.91	-63.81	839257.5194	1811650.9534
L	16+50.00	-42.47	839350.8162	1811701.6146
L	16+65.00	40.00	839366.1842	1811783.9588
L	17+71.91	40.00	839486.0073	1811750.8814
L	18+16.48	-30.00	839498.6341	1811669.6960
L	19+50.00	40.00	839628.6910	1811734.3626
L	19+50.00	-30.00	839647.3777	1811666.9029
L	20+00.00	40.00	839676.8720	1811747.7090
L	20+00.00	-30.00	839695.5587	1811680.2493
L	20+00.00	-20.00	839692.8892	1811689.8864
L	20+00.00	20.00	839682.2111	1811728.4348

-Y- NEW FINAL R/W MONUMENTS

ALIGN	STATION	OFFSET	NORTH	EAST
Y	10+65.00	41.68	839290.7814	1811821.5861
Y	10+90.00	-29.24	839365.1231	1811810.3678

-L- NEW FINAL PERMANENT DRAINAGE EASEMENTS

ALIGN	STATION	OFFSET	NORTH	EAST
L	11+50.00	-30.53	838908.2362	1811514.7763
L	11+50.00	-45.00	838914.4739	1811501.7169
L	11+75.00	-45.00	838937.5302	1811512.9313
L	11+75.00	-32.21	838931.8547	1811524.3924

-L- NEW FINAL PERMANENT UTILITY EASEMENTS

ALIGN	STATION	OFFSET	NORTH	EAST
L	9+60.00	29.71	838709.5155	1811492.4213
L	9+60.00	75.00	838691.3367	1811533.9064
L	12+65.00	60.00	838971.4530	1811647.0413

-Y- NEW FINAL PERMANENT UTILITY EASEMENTS

ALIGN	STATION	OFFSET	NORTH	EAST
Y	11+10.00	30.05	839333.7426	1811863.9432

NOTE: DRAWING NOT TO SCALE

12/01/2005
8:46:01 AM
C:\Projects\Proj\400210.ls.lc-2.dgn

DocuSign Envelope ID: 2B23A76F-2081-4E6D-88BC-64B5D93F78A1

PROJECT REFERENCE	SHEET NO.
17BP.7.R.90 – GUILFORD 210	2A

ROADWAY DESIGN ENGINEER

NORTH CAROLINA PROFESSIONAL SEAL 21102 ENGINEER

Digitally signed by: JAMES TIMOTHY JORDAN/MOTH
4/5/2018

MOTT MACDONALD I & E, LLC
LICENSE NO. F-0669

DOCUMENT NOT CONSIDERED FINAL UNLESS ALL SIGNATURES COMPLETED

Prepared in the Office of:

MOTT MACDONALD

PO Box 700
Fuquay-Varina, NC 27526
www.mottmac.com

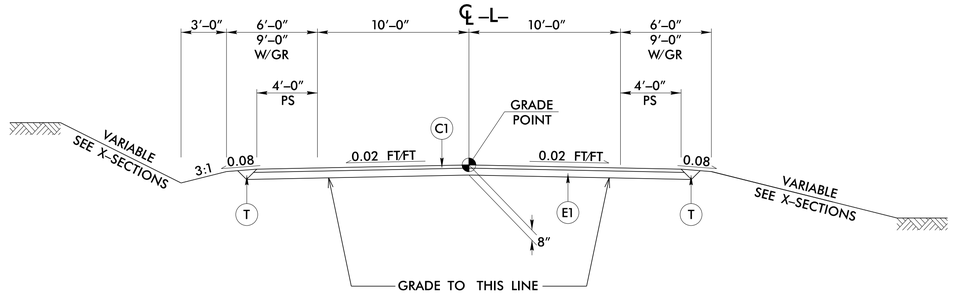

TYPICAL SECTION NO. 1

TRANSITION SHOULDERS FROM EXISTING TO TYPICAL SECTION NO. 1:
–L– STA 10+00.00 TO 10+50.00

USE TYPICAL SECTION NO. 1:
–L– STA 10+50.00 TO 14+41.84 (BEGIN BRIDGE)
–L– STA 15+34.17 (END BRIDGE) TO 19+50.00

TRANSITION SHOULDERS FROM TYPICAL SECTION NO. 1 TO EXISTING:
–L– STA 19+50.00 TO 20+00.00

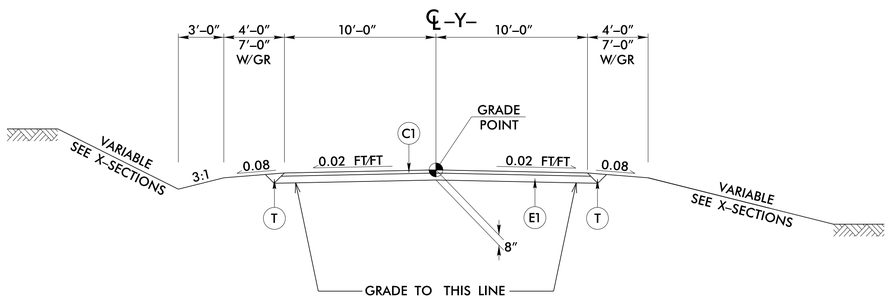

TYPICAL SECTION NO. 2

USE TYPICAL SECTION NO. 2:
–Y– STA 10+10.00 TO 11+20.00

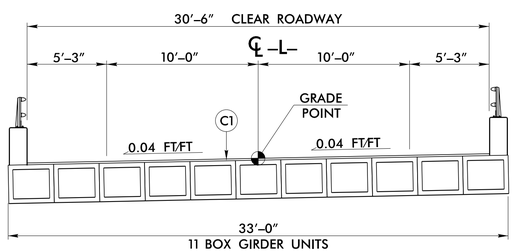

TYPICAL SECTION NO. 3

USE TYPICAL SECTION NO. 3:
–L– STA 14+41.84 (BEGIN BRIDGE) TO 15+34.17 (END BRIDGE)

NOTE: SEE STRUCTURE PLANS FOR PAVEMENT DEPTHS ON STRUCTURE

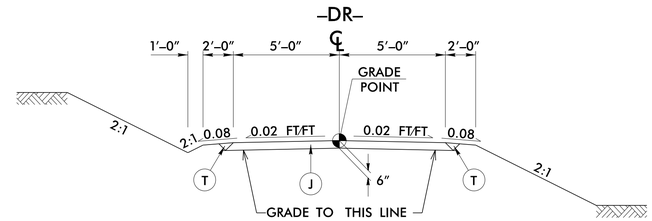

TYPICAL SECTION NO. 4

USE TYPICAL SECTION NO. 4:
–DR– STA 10+14.75 TO 10+65.00

PAVEMENT SCHEDULE	
C1	PROP. APPROX. 2½" ASPHALT CONCRETE SURFACE COURSE, TYPE S9.5B, AT AN AVERAGE RATE OF 140 LBS. PER SQ. YD. IN EACH OF TWO LAYERS.
E1	PROP. APPROX. 5½" ASPHALT CONCRETE BASE COURSE, TYPE B25.0C, AT AN AVERAGE RATE OF 627 LBS. PER SQ. YD.
J	PROP. 6" AGGREGATE BASE COURSE.
T	EARTH MATERIAL.

NOTE: PAVEMENT EDGE SLOPES ARE 1:1 UNLESS SHOWN OTHERWISE.

jor66165
R:\Roadway\Proj\400210_rdy_typ.dgn
4/5/2018 7:14:06 AM

DocuSign Envelope ID: 36CCAE1B-E1CC-42A9-9FE9-7670E29563F9

PROJECT REFERENCE NO.	SHEET NO.
17BP.7.R.90 - GUILFORD 210	2C-1
DOCUMENT NOT CONSIDERED FINAL UNLESS ALL SIGNATURES COMPLETED	

STATE OF
NORTH CAROLINA
DEPT. OF TRANSPORTATION
DIVISION OF HIGHWAYS
RALEIGH, N.C.

ROADWAY DETAIL DRAWING FOR
GUARDRAIL INSTALLATION

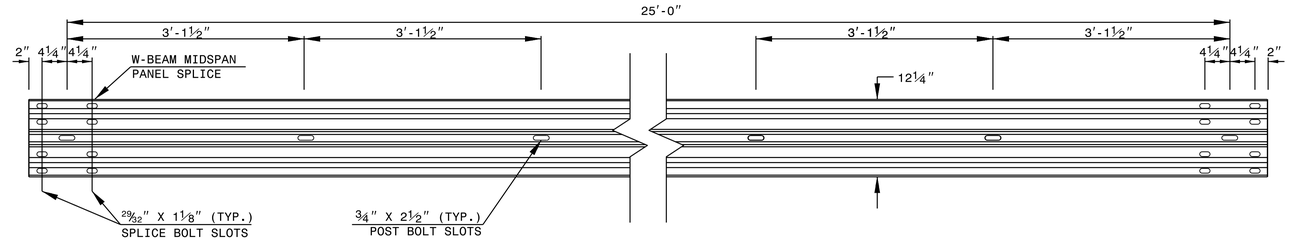

STANDARD W-BEAM GUARDRAIL

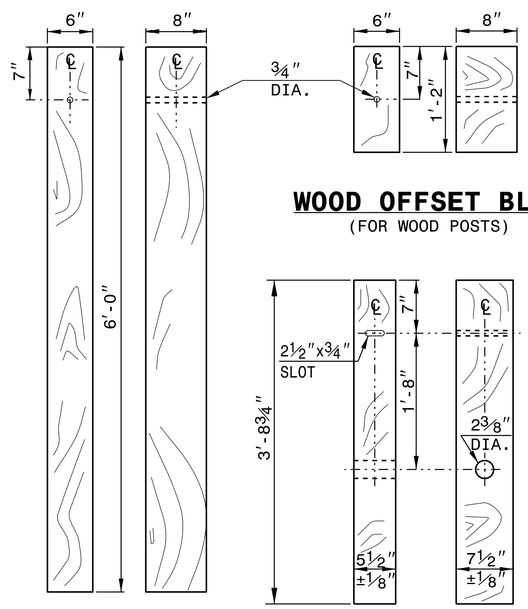

STANDARD LINE POST

WOOD OFFSET BLOCK
(FOR WOOD POSTS)

SHORT WOOD BREAKAWAY POST

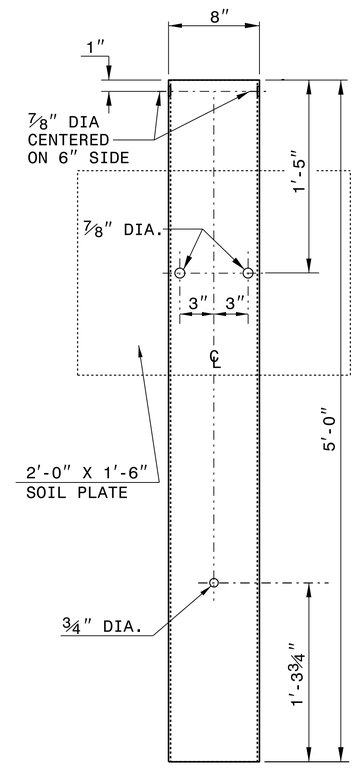

STEEL TUBE
TS 6"x8"x0.1875"

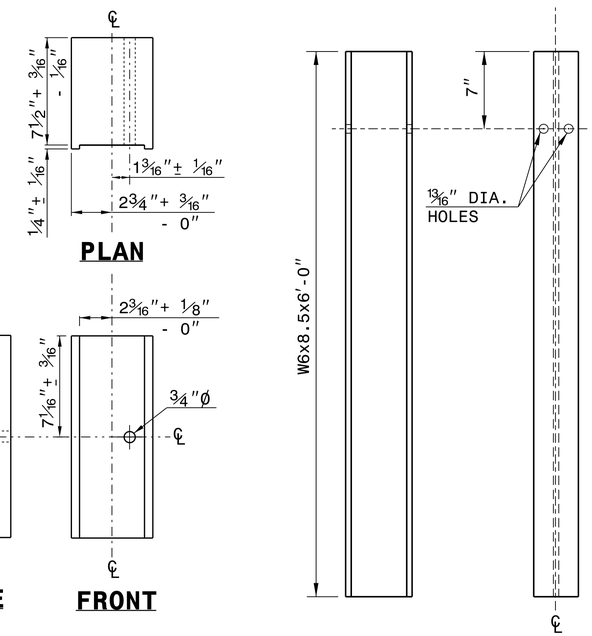

SYSTEM PARTS

STATE OF
NORTH CAROLINA
DEPT. OF TRANSPORTATION
DIVISION OF HIGHWAYS
RALEIGH, N.C.

ROADWAY DETAIL DRAWING FOR
GUARDRAIL INSTALLATION

SHEET 6 OF 8
862D02

SHEET 6 OF 8
862D02

4/6/2018

CONTRACTS STANDARDS AND DEVELOPMENT UNIT
Office 919-707-6950 FAX 919-250-4119

SEE TITLE BLOCK

ORIGINAL BY: J.HOWERTON DATE: 3-7-2018
MODIFIED BY: DATE:
CHECKED BY: DATE:
FILE SPEC.:

DocuSign Envelope ID: 36CCAE1B-E1CC-42A9-9FE9-7676256A5F9

STATE OF NORTH CAROLINA
DEPT. OF TRANSPORTATION
DIVISION OF HIGHWAYS
RALEIGH, N.C.

ROADWAY DETAIL DRAWING FOR
STRUCTURE ANCHOR UNITS
GUARDRAIL ANCHOR UNIT, TYPE III
FOR ATTACHMENT TO RAIL ON BRIDGE

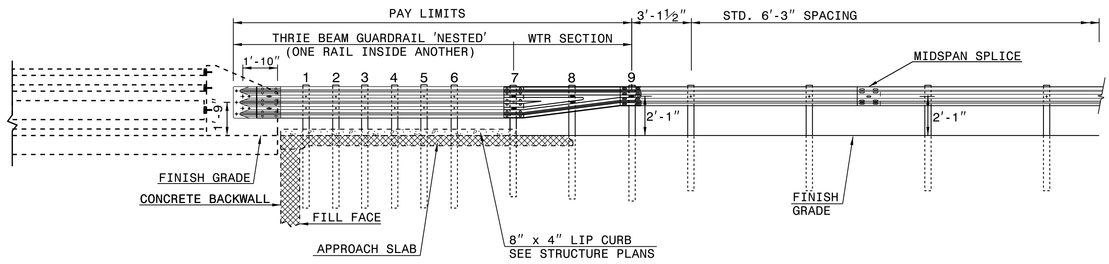

ELEVATION

NOTE:
**POST NOT REQUIRED FOR SKEW ANGLES GREATER THAN 150° OR LESS THAN 30° UNLESS OTHERWISE DIRECTED BY THE ENGINEER.
*THE DISTANCE FROM END OF BRIDGE RAIL TO CENTER LINE OF THE FIRST POST SHOULD BE 11½" IF CONCRETE BACKWALL IS NOT PRESENT.
-SHOULDER BERM GUTTER MUST BE INSTALLED TO THE LIMITS 8" x 4" LIP CURB IS SHOWN IF ANCHOR UNIT IS NOT ADJACENT TO AN APPROACH SLAB.
-MEASURE GUARDRAIL HEIGHT FROM THE TOP OF ADJACENT SURFACE (SHOULDER, BERM, OR GUTTER).
-LAP JOINTS IN THE DIRECTION OF TRAFFIC FLOW.
-SEE SHEET 3 FOR POST SECTIONS 1 THRU 9.

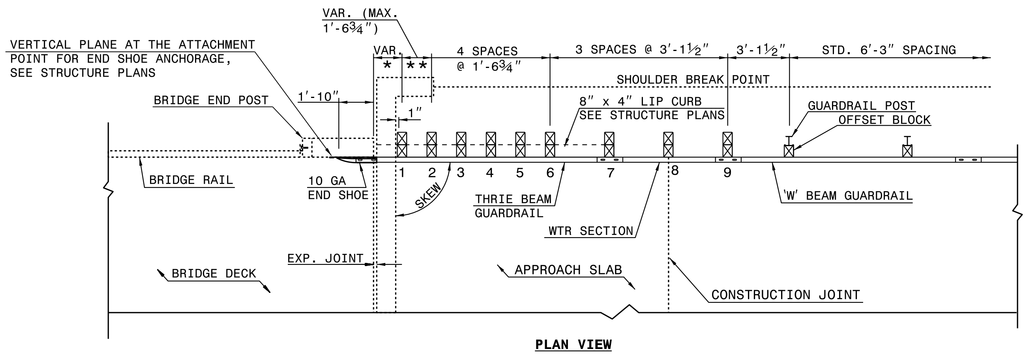

PLAN VIEW

GUARDRAIL ANCHOR UNIT, TYPE III FOR ATTACHMENT TO RAIL ON BRIDGE

SHEET 1 OF 7
862D03

STATE OF NORTH CAROLINA
DEPT. OF TRANSPORTATION
DIVISION OF HIGHWAYS
RALEIGH, N.C.

ROADWAY DETAIL DRAWING FOR
STRUCTURE ANCHOR UNITS
GUARDRAIL ANCHOR UNIT, TYPE III
FOR ATTACHMENT TO RAIL ON BRIDGE

SHEET 1 OF 7
862D03

STATE OF NORTH CAROLINA
DEPT. OF TRANSPORTATION
DIVISION OF HIGHWAYS
RALEIGH, N.C.

ROADWAY DETAIL DRAWING FOR
STRUCTURE ANCHOR UNITS
GUARDRAIL ANCHOR UNIT, TYPE III FOR ATTACHMENT TO
RAIL ON BRIDGE - SUB REGIONAL TIER

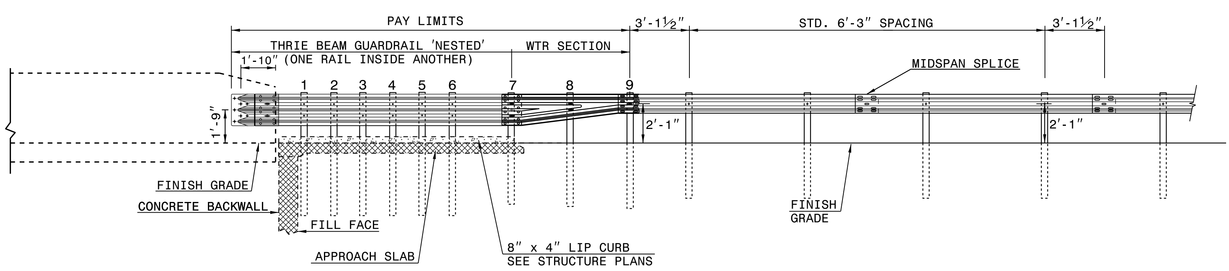

ELEVATION

NOTE:
**POST NOT REQUIRED FOR SKEW ANGLES GREATER THAN 150° OR LESS THAN 30° UNLESS OTHERWISE DIRECTED BY THE ENGINEER.
*THE DISTANCE FROM END OF BRIDGE RAIL TO CENTER LINE OF THE FIRST POST SHOULD BE 11½" IF CONCRETE BACKWALL IS NOT PRESENT.
-SHOULDER BERM GUTTER MUST BE INSTALLED TO THE LIMITS 8" x 4" LIP CURB IS SHOWN IF ANCHOR UNIT IS NOT ADJACENT TO AN APPROACH SLAB.
-MEASURE GUARDRAIL HEIGHT FROM THE TOP OF ADJACENT SURFACE (SHOULDER, BERM, OR GUTTER).
-LAP JOINTS IN THE DIRECTION OF TRAFFIC FLOW.
-SEE SHEET 3 FOR POST SECTIONS 1 THRU 9.

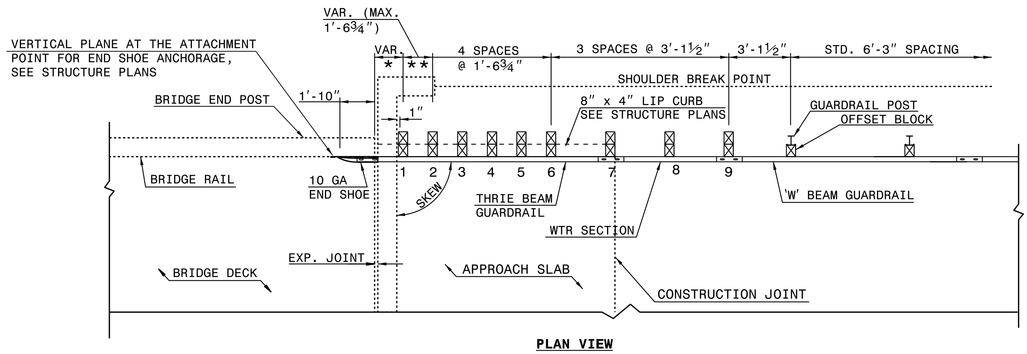

PLAN VIEW

GUARDRAIL ANCHOR UNIT, TYPE III FOR ATTACHMENT TO RAIL ON BRIDGE - SUB REGIONAL TIER

SHEET 2 OF 7
862D03

STATE OF NORTH CAROLINA
DEPT. OF TRANSPORTATION
DIVISION OF HIGHWAYS
RALEIGH, N.C.

ROADWAY DETAIL DRAWING FOR
STRUCTURE ANCHOR UNITS
GUARDRAIL ANCHOR UNIT, TYPE III FOR ATTACHMENT TO
RAIL ON BRIDGE - SUB REGIONAL TIER

SHEET 2 OF 7
862D03

SEE TITLE BLOCK

ORIGINAL BY: J. HOWERTON DATE: 06-22-12
MODIFIED BY: DATE:
CHECKED BY: DATE:
FILE SPEC.:

CONTRACT STANDARDS AND DEVELOPMENT UNIT
Office 919-707-6950 FAX 919-250-4119

DOCUMENT NOT CONSIDERED FINAL UNLESS ALL SIGNATURES COMPLETED

NORTH CAROLINA PROFESSIONAL ENGINEER SEAL 022966 JAMES A. SHAKESPEARE
4/9/2018

PROJECT REFERENCE NO.: 17BP.7.R.90 - GUILFORD 210
SHEET NO.: 2C-2

PROJECT REFERENCE	SHEET NO.
17BP.7.R.90 – GUILFORD 210	3

"N" = DISTANCE FROM EDGE OF LANE TO FACE OF GUARDRAIL.
TOTAL SHOULDER WIDTH = DISTANCE FROM EDGE OF TRAVEL LANE TO SHOULDER BREAK POINT.
FLARE LENGTH = DISTANCE FROM LAST SECTION OF PARALLEL GUARDRAIL TO END OF GUARDRAIL.
W = TOTAL WIDTH OF FLARE FROM BEGINNING OF TAPER TO END OF GUARDRAIL.
G = GATING IMPACT ATTENUATOR TYPE 350
NG = NON–GATING IMPACT ATTENUATOR TYPE 350

GUARDRAIL SUMMARY

SURVEY LINE	BEG. STA.	END STA.	LOCATION	LENGTH			WARRANT POINT		"N" DIST. FROM E.O.L.	TOTAL SHOULDER WIDTH	FLARE LENGTH		W		ANCHORS									IMPACT ATTENUATOR TYPE 350			REMARKS
				STRAIGHT	SHOP CURVED	DOUBLE FACED	APPROACH END	TRAILING END			APPROACH END	TRAILING END	APPROACH END	TRAILING END	AT–1	GREU TL–2	TYPE III							NO.	PERMITTED G	PERMITTED NG	
–L–	13+81.50	14+37.75	RT	56.25′			14+37.75 (BRIDGE)		6′	9′						1	1										
–L–	14+10+/–	14+45.93	LT	25.00′	12.50′			14+45.93 (BRIDGE)	6′	9′					1		1										BREAK FOR DRIVE
–L–	15+30.08	16+13+/–	RT	75.00′	25.00′			15+30.08 (BRIDGE)	6′	9′					1		1										BREAK FOR CREEK ROAD
–L–	15+38.26	16+32.01	LT	93.75′			15+38.26 (BRIDGE)		6′	9′						1	1										
		SUBTOTAL		250.00′	37.50′																						
		LESS ANCHOR DEDUCTIONS																									
		GREU TL–2 2 x 25.00′ =		–50.00′																							
		TYPE III 4 x 18.75′ =		–75.00′																							
		AT–1 2 x 6.25′ =		–12.50′																							
		TOTAL		112.5′	37.50′										2	2	4										

SUB–REGIONAL & REGIONAL LIST OF PIPES, ENDWALLS, ETC. (FOR PIPES 48" & UNDER)

| STATION | LOCATION (LT, RT, OR CL) | STRUCTURE NO. FROM | STRUCTURE NO. TO | TOP ELEVATION | INVERT ELEVATION | INVERT ELEVATION | SLOPE CRITICAL | DRAINAGE PIPE (RCP, CSP, CAAP, HDPE, or PVC) SIZE 12" | 15" | 18" | 24" | 30" | 36" | 42" | 48" | DO NOT USE RCP | DO NOT USE PVC | DO NOT USE CAAP | DO NOT USE HDPE | C.S. PIPE SIZE 12" | 15" | 18" | 24" | 36" | 42" | 48" | R.C. PIPE (CLASS III) SIZE 15" | 18" | 24" | 30" | 36" | 42" | 48" | R.C. PIPE (CLASS IV) SIZE 12" | 15" | 18" | 24" | 30" | 36" | 42" | 48" | *** R.C. PIPE (CLASS V) | *** R.C. PIPE CULVERTS, CONTRACTOR DESIGN PIPE | *** R.C. PIPE CULVERTS, CONTRACTOR DESIGN PIPE | 15" SIDE DRAIN PIPE | 18" SIDE DRAIN PIPE | ENDWALLS STD. 838.01, STD. 838.11 OR STD. 838.80 (UNLESS NOTED OTHERWISE) CU. YDS. R.C.P. | CU. YDS. C.S.P. | QUANTITIES FOR DRAINAGE STRUCTURES PER EACH (0′ THRU 5.0′) | * TOTAL L.F. FOR PAY QUANTITY SHALL BE COL. 'A' + (1.3 X COL. 'B') LIN. FT. A: 5.0′ THRU 10.0′ | LIN. FT. B: 10.0′ AND ABOVE | C.B. STD. 840.01 OR STD. 840.02 | FRAME, GRATES AND HOOD STANDARD 840.03 TYPE OF GRATE E | F | G | CONCRETE TRANSITIONAL SECTION CATCH BASIN | DROP INLET | G.D.I. FRAME WITH GRATE STD. 840.22 | G.D.I. FRAME WITH TWO GRATES STD. 840.22 | G.D.I. (N.S.) FRAME WITH GRATE STD. 840.24 | G.D.I. (N.S.) FRAME WITH TWO GRATES STD. 840.24 | G.D.I. (N.S.) FRAME WITH TWO GRATES STD. 840.29 | T.B.D.I. STD. 840.35 | CORR. STEEL ELBOWS NO. & SIZE | CONC. COLLARS CL. "B" C.Y. STD 840.72 | CONC. & BRICK PIPE PLUG, C.Y. STD. 840.71 | PIPE REMOVAL LIN.FT. | REMARKS |
|---|---|---|---|---|---|---|---|---|---|---|---|---|---|---|---|---|---|---

DocuSign Envelope ID: D1E0CF5D-1E7B-464C-8C13-C6789E32317D

*DESIGN EXCEPTION:
MIN. HORIZONTAL CURVE RADIUS
SAG VERTICAL CURVE K
HORIZONTAL SSD
VERTICAL SSD

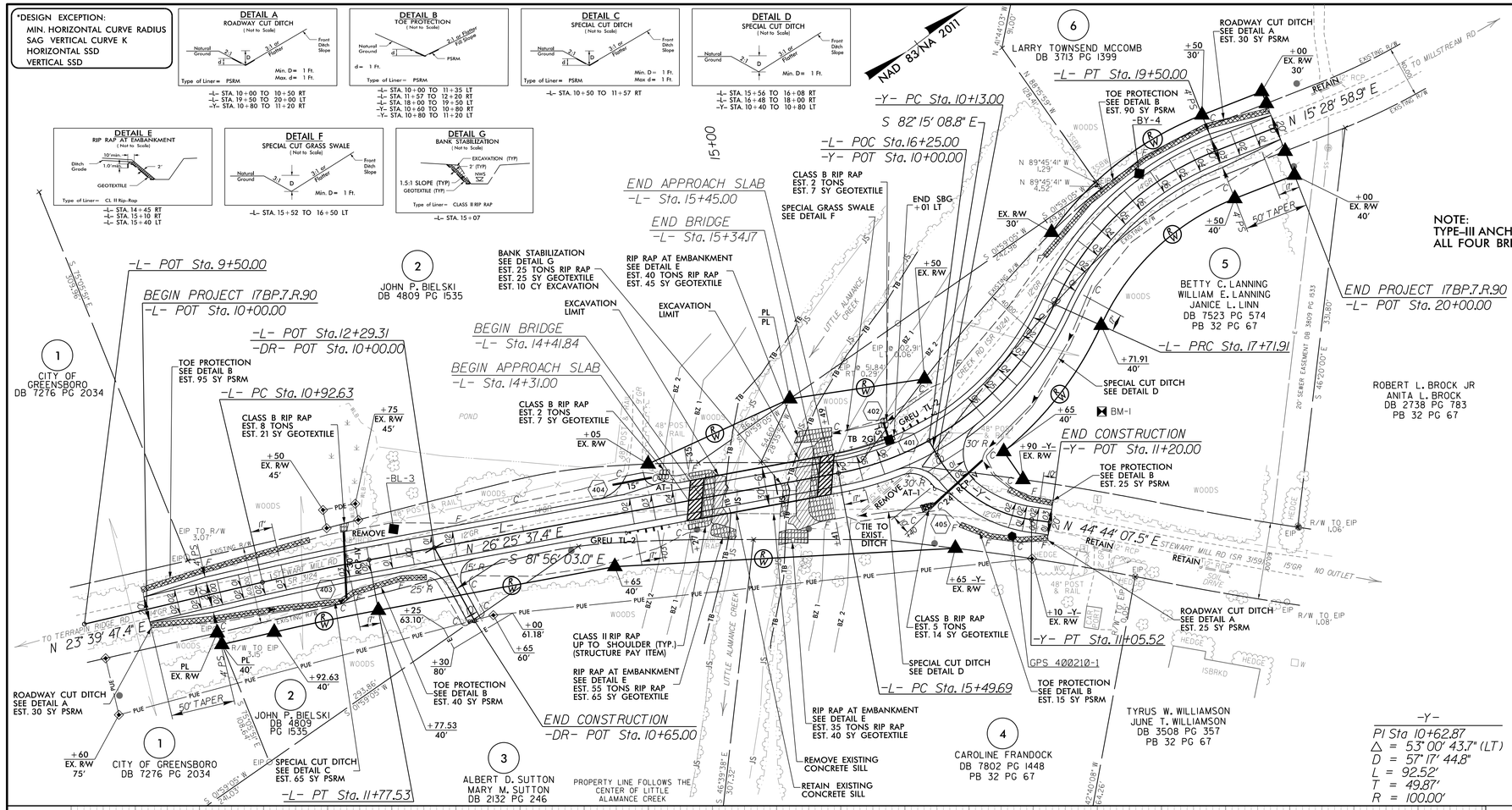

-Y-

PI Sta 10+62.87
△ = 53° 00' 43.7" (LT)
D = 57° 17' 44.8"
L = 92.52'
T = 49.87'
R = 100.00'

-L-

PI Sta 11+35.09
△ = 2° 45' 50.1" (RT)
D = 3° 15' 19.6"
L = 84.90'
T = 42.46'
R = 1,760.00'

PI Sta 16+70.24
△ = 55° 07' 04.2" (LT)
D = 24° 48' 12.1"
L = 222.22'
T = 120.55'
R = 231.00'

PI Sta 18+65.65
△ = 44° 10' 25.7" (RT)
D = 24° 48' 12.1"
L = 178.10'
T = 93.74'
R = 231.00'

PROJECT REFERENCE	SHEET NO.
17BP.7.R.90 – GUILFORD 210	4

ROADWAY DESIGN ENGINEER
NORTH CAROLINA PROFESSIONAL SEAL 21102 ENGINEER TIMOTHY JOHNSON
Docusigned by: 2/7/2018
MOTT MACDONALD I & E, LLC
LICENSE NO. F-0669

HYDRAULICS ENGINEER
NORTH CAROLINA PROFESSIONAL SEAL 19732 ENGINEER STEPHEN C. FISH
Docusigned by: 2/8/2018
HDR ENGINEERING
LICENSE NO. F-0116

DOCUMENT NOT CONSIDERED FINAL UNLESS ALL SIGNATURES COMPLETED

Prepared in the Office of:
MOTT MACDONALD
PO Box 700
Fuquay-Varina, NC 27526
www.mottmac.com

HDR Engineering, Inc. of the Carolinas
555 Fayetteville St. Suite 900 Raleigh, N.C. 27601
N.C.B.E.L.S. License Number: F-0116

VERTICAL SCALE 5' 0 5' 10'
HORIZONTAL SCALE 25' 0 25' 50'

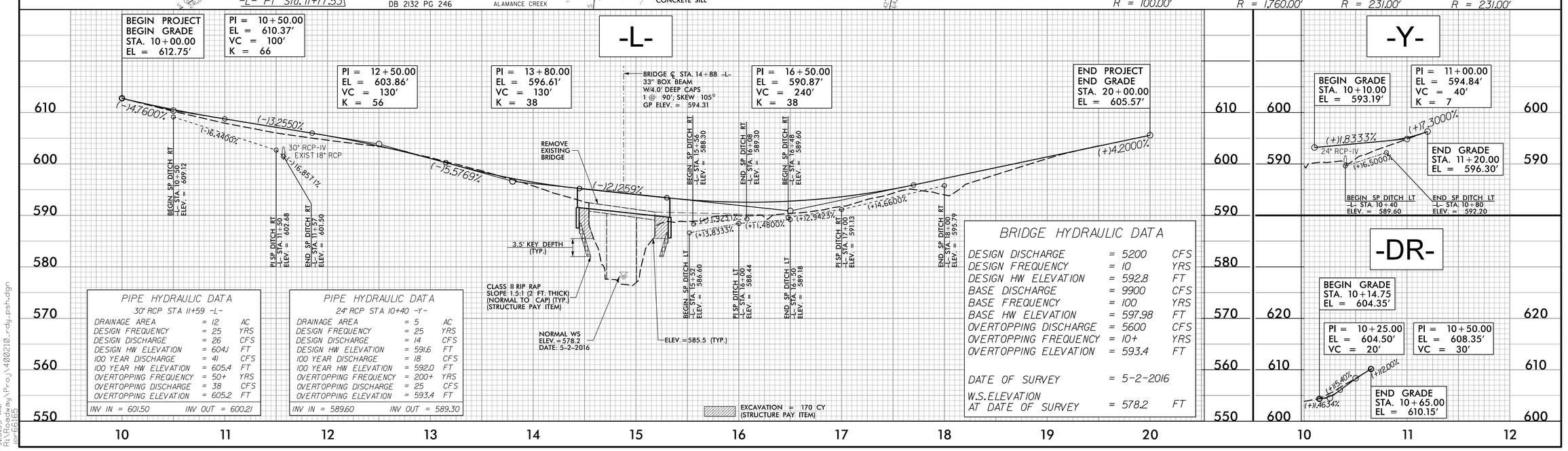

PIPE HYDRAULIC DATA
30" RCP STA 11+59 -L-

DRAINAGE AREA	= 12	AC
DESIGN FREQUENCY	= 25	YRS
DESIGN DISCHARGE	= 26	CFS
DESIGN HW ELEVATION	= 604.1	FT
100 YEAR DISCHARGE	= 41	CFS
100 YEAR HW ELEVATION	= 605.4	FT
OVERTOPPING FREQUENCY	= 50+	YRS
OVERTOPPING DISCHARGE	= 38	CFS
OVERTOPPING ELEVATION	= 605.2	FT

INV IN = 601.50 INV OUT = 600.21

PIPE HYDRAULIC DATA
24" RCP STA 10+40 -Y-

DRAINAGE AREA	= 5	AC
DESIGN FREQUENCY	= 25	YRS
DESIGN DISCHARGE	= 14	CFS
DESIGN HW ELEVATION	= 591.6	FT
100 YEAR DISCHARGE	= 18	CFS
100 YEAR HW ELEVATION	= 592.0	FT
OVERTOPPING FREQUENCY	= 200+	YRS
OVERTOPPING DISCHARGE	= 25	CFS
OVERTOPPING ELEVATION	= 593.4	FT

INV IN = 589.60 INV OUT = 589.30

BRIDGE HYDRAULIC DATA

DESIGN DISCHARGE	= 5200	CFS
DESIGN FREQUENCY	= 10	YRS
DESIGN HW ELEVATION	= 592.8	FT
BASE DISCHARGE	= 9900	CFS
BASE FREQUENCY	= 100	YRS
BASE HW ELEVATION	= 597.98	FT
OVERTOPPING DISCHARGE	= 5600	CFS
OVERTOPPING FREQUENCY	= 10+	YRS
OVERTOPPING ELEVATION	= 593.4	FT
DATE OF SURVEY	= 5-2-2016	
W.S.ELEVATION AT DATE OF SURVEY	= 578.2	FT

2/7/2018
9:16:35 AM
R:\Roadway\Proj\400210_rdy_psh.dgn
(jr66165)

DocuSign Envelope ID: 5442F3EC-FD7E-40D6-821F-36EB845AAA8E

PROJECT REFERENCE	SHEET NO.
17BP.7.R.90 – GUILFORD 210	TMP–1

ROADWAY DESIGN ENGINEER

NORTH CAROLINA PROFESSIONAL SEAL 21102 ENGINEER TIMOTHY JOHNSON

DocuSigned by: Timothy Johnson 3/6/2018

MOTT MACDONALD I & E, LLC
LICENSE NO. F–0669

DOCUMENT NOT CONSIDERED FINAL UNLESS ALL SIGNATURES COMPLETED

Prepared in the Office of:

MOTT MACDONALD

PO Box 700
Fuquay–Varina, NC 27526
www.mottmac.com

THE FOLLOWING ROADWAY STANDARDS AS APPEAR IN "ROADWAY STANDARD DRAWINGS" – HIGHWAY DESIGN BRANCH– N.C. DEPARTMENT OF TRANSPORTATION – RALEIGH, N.C., DATED JANUARY 2018 ARE APPLICABLE TO THIS PROJECT AND BY REFERENCE HEREBY ARE CONSIDERED A PART OF THESE PLANS:

STD.	TITLE
1101.03	TEMPORARY ROAD CLOSURES
1110.01	STATIONARY WORK ZONE SIGNS
1145.01	BARRICADES
1205.01	PAVEMENT MARKINGS – LINE TYPES AND OFFSETS
1205.02	PAVEMENT MARKINGS – TWO–LANE AND MULTI–LANE ROADWAYS
1205.12	PAVEMENT MARKINGS – BRIDGES
1261.01	GUARDRAIL AND BARRIER DELINEATORS – INSTALLATION SPACING
1261.02	GUARDRAIL AND BARRIER DELINEATORS – TYPES AND MOUNTING
1262.01	GUARDRAIL END DELINEATION

GENERAL NOTES

CHANGES MAY BE REQUIRED WHEN PHYSICAL DIMENSIONS IN THE DETAIL DRAWINGS, STANDARD DETAILS, AND ROADWAY DETAILS ARE NOT ATTAINABLE TO MEET FIELD CONDITIONS OR RESULT IN DUPLICATE OR UNDESIRED OVERLAPPING OF DEVICES. MODIFICATION MAY INCLUDE: MOVING, SUPPLEMENTING, COVERING, OR REMOVAL OF DEVICES AS DIRECTED BY THE ENGINEER.

THE FOLLOWING GENERAL NOTES APPLY AT ALL TIMES FOR THE DURATION OF THE CONSTRUCTION PROJECT EXCEPT WHEN OTHERWISE NOTED IN THE PLAN OR DIRECTED BY THE ENGINEER.

TRAFFIC PATTERN ALTERATIONS

A) NOTIFY THE ENGINEER TWENTY ONE (21) CALENDAR DAYS PRIOR TO ANY TRAFFIC PATTERN ALTERATION.

SIGNING

B) PROVIDE PERMANENT SIGNING.

C) PROVIDE SIGNING AND DEVICES REQUIRED TO CLOSE THE ROAD ACCORDING TO THE ROADWAY STANDARD DRAWINGS AND TRAFFIC CONTROL PLANS.

PROVIDE SIGNING REQUIRED FOR THE OFF–SITE DETOUR ROUTE AS SHOWN IN THE TRAFFIC CONTROL PLANS.

D) COVER OR REMOVE ALL SIGNS AND DEVICES REQUIRED TO CLOSE THE ROAD WHEN ROAD CLOSURE IS NOT IN OPERATION.

COVER OR REMOVE ALL SIGNS REQUIRED FOR THE OFF–SITE DETOUR WHEN THE DETOUR IS NOT IN OPERATION.

E) ENSURE ALL NECESSARY SIGNING IS IN PLACE PRIOR TO ALTERING ANY TRAFFIC PATTERN.

TRAFFIC CONTROL DEVICES

F) PLACE TYPE III BARRICADES, WITH "ROAD CLOSED" SIGN R11–2 ATTACHED, OF SUFFICIENT LENGTH TO CLOSE ENTIRE ROADWAY.

PAVEMENT MARKINGS AND MARKERS

G) INSTALL PAVEMENT MARKINGS ON THE FINAL SURFACE.

PHASING

STEP 1: USING ROADWAY STANDARD DRAWING NUMBER 1101.03, SHEET 1 OF 9, AND SHEET TMP–2, PERFORM THE FOLLOWING:
– INSTALL ALL ROAD CLOSURE AND DETOUR SIGNING INCLUDING BARRICADES
– CLOSE SR 3124 (STEWART MILL ROAD)
– PLACE TRAFFIC ONTO OFF– SITE DETOUR

STEP 2: REMOVE EXISTING BRIDGE #210 AND CONSTRUCT THE PROPOSED BRIDGE AND APPROACHES AS SHOWN IN THE CONSTRUCTION PLANS.

STEP 3: INSTALL FINAL PAVEMENT MARKINGS.

STEP 4: REMOVE ALL TRAFFIC CONTROL SIGNING AND DEVICES AND RE–OPEN SR 3124 (STEWART MILL ROAD) TO THE FINAL TRAFFIC PATTERN.

PAVEMENT MARKING

THERMOPLASTIC (4" – 90 MILS)	2,150 LF
THERMOPLASTIC (4" – 120 MILS)	2,238 LF

jor66165
R:\Roadway\Proj\400210_rdy_tmp.dgn
3/6/2018 11:04:07 AM

DocuSign Envelope ID: 07B736DE-AFE9-4777-9B69-699E4DE8FB92

PROJECT REFERENCE	SHEET NO.
17BP.7.R.90 – GUILFORD 210	TMP–2

ROADWAY DESIGN ENGINEER

NORTH CAROLINA PROFESSIONAL SEAL 21102 TIMOTHY LOWDERMILK

Docu Signed by: Timothy Lowdermilk 2/7/2018

MOTT MACDONALD I & E, LLC
LICENSE NO. F–0669

DOCUMENT NOT CONSIDERED FINAL UNLESS ALL SIGNATURES COMPLETED

Prepared in the Office of:
MOTT MACDONALD
PO Box 700
Fuquay–Varina, NC 27526
www.mottmac.com

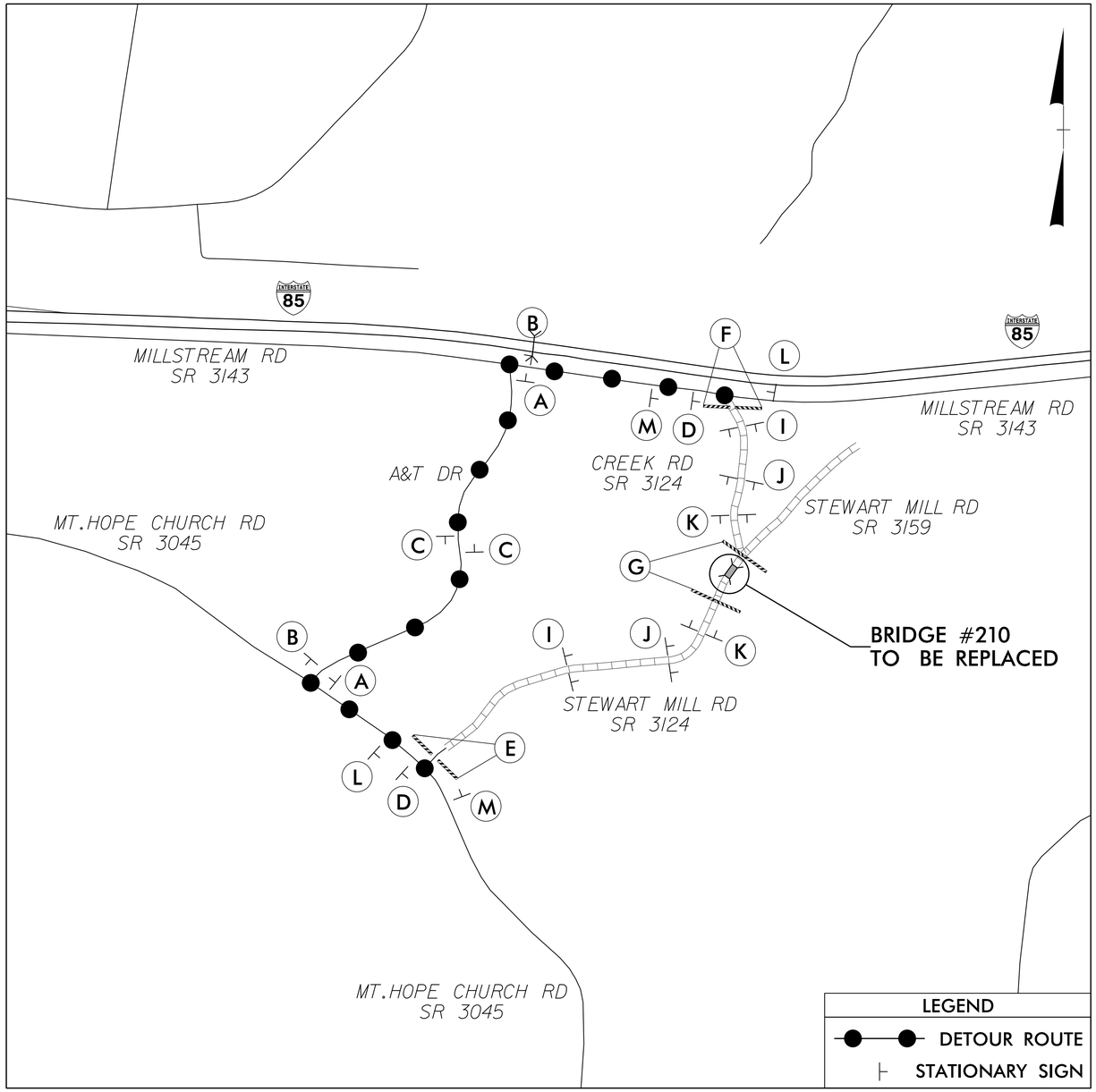

✱ SEE SHEET TMP–3 FOR SPECIAL SIGN DESIGNS

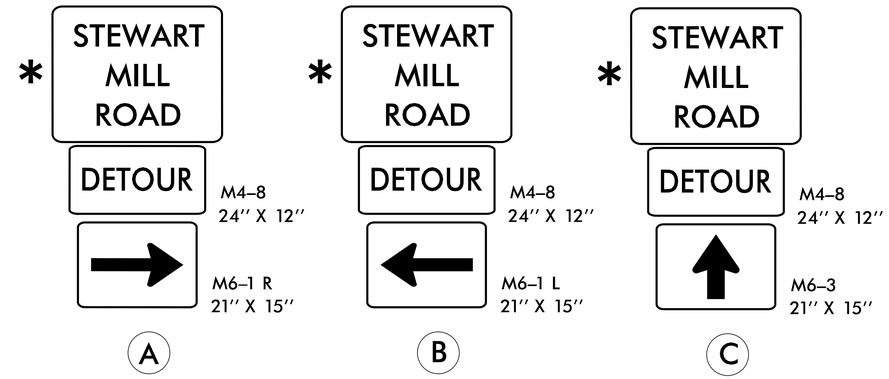

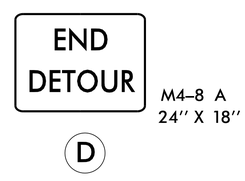

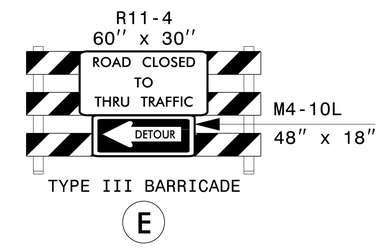

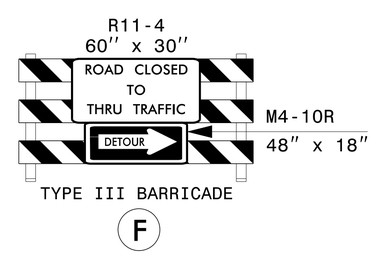

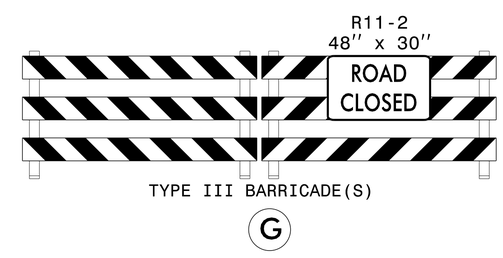

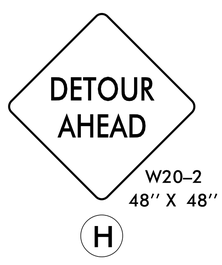

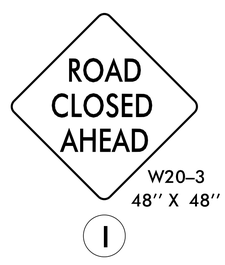

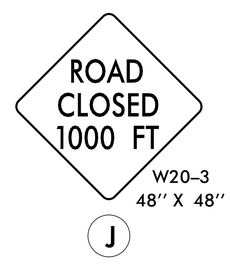

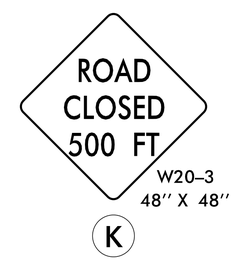

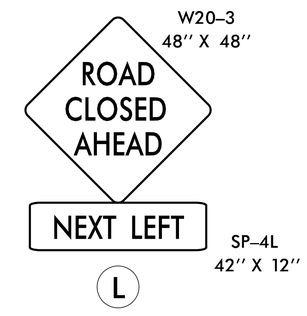

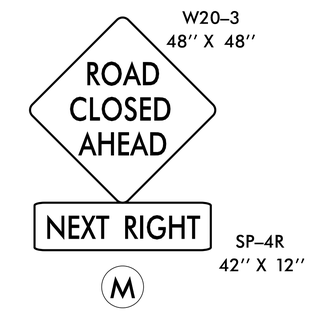

jor66165
R:\Roadway\Proj\400210_rdy_tmp.dgn
2/7/2018 9:16:40 AM

DocuSign Envelope ID: 07B736DE-AFE9-4777-9B69-699E4DE8FB92

PROJECT REFERENCE	SHEET NO.
17BP.7.R.90 – GUILFORD 210	TMP–3

TRAFFIC ENGINEER

NORTH CAROLINA PROFESSIONAL SEAL 032711 ENGINEER RICHARD W. THOMPSON

DocuSigned by: 2/12/2021

MOTT MACDONALD I & E, LLC
LICENSE NO. F–0669

DOCUMENT NOT CONSIDERED FINAL UNLESS ALL SIGNATURES COMPLETED

Prepared in the Office of:

MOTT MACDONALD
PO Box 700
Fuquay–Varina, NC 27526
www.mottmac.com

SIGN NUMBER: SD-1
TYPE: D
QUANTITY: SEE PLANS

SIGN WIDTH: 3′-6″
HEIGHT: 3′-6″
TOTAL AREA: 12.3 Sq.Ft.

BORDER TYPE: INSET
RECESS: 0.38″
WIDTH: 0.5″
RADII: 1.5″

NO. Z BARS:
LENGTH:

BACKG COLOR: Fluorescent Orange
COPY COLOR: Black

SYMBOL	X	Y	WID	HT

MAT′L: 0.080″ (2.0 mm) ALUMINUM

DESIGN BY: PJ
PROJECT ID: 17BP.7.R.90

CHECKED BY: RWT
DIV: 7

DATE: Oct 20, 2015

USE NOTES: 1,2

1. Legend and border shall be direct applied black non-reflective sheeting.
2. Background shall be NC GRADE B fluoresent orange retroreflective sheeting.

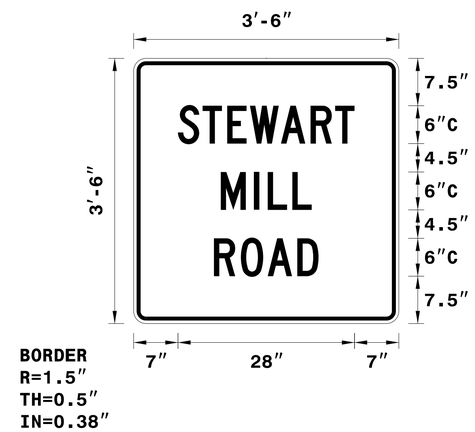

Spacing Factor is 1 unless specified otherwise

LETTER POSITIONS

Letter locations are panel edge to lower left corner

								Series/Size Text Length
	S	T	E	W	A	R	T	C 2000
	7	10.9	14.8	18.4	23.3	28	31.9	28
	M	I	L	L				C 2000
	13.8	19.1	21.2	25.1				14.4
	R	O	A	D				C 2000
	12.7	17	21.2	25.9				16.6

FILENAME: 400210_rdy_tmp3

NORTH CAROLINA D.O.T. SIGN DETAIL

jor66165
R:\Roadway\Proj\400210_rdy_tmp3.dgn
2/7/2018 9:18:04 AM

TIP PROJECT: 17BP.7.R.90

STATE	STATE PROJECT REFERENCE NO.	SHEET NO.	TOTAL SHEETS
N.C.	17BP.7.R.90	EC-1	

STATE PROJ. NO.	F.A. PROJ. NO.	DESCRIPTION

STATE OF NORTH CAROLINA
DIVISION OF HIGHWAYS

PLAN FOR PROPOSED
HIGHWAY EROSION CONTROL

GUILFORD COUNTY

LOCATION: BRIDGE NO.210 OVER LITTLE ALAMANCE CREEK ON SR 3124 (STEWART MILL ROAD)

TYPE OF WORK: GRADING, PAVING, DRAINAGE AND STRUCTURE

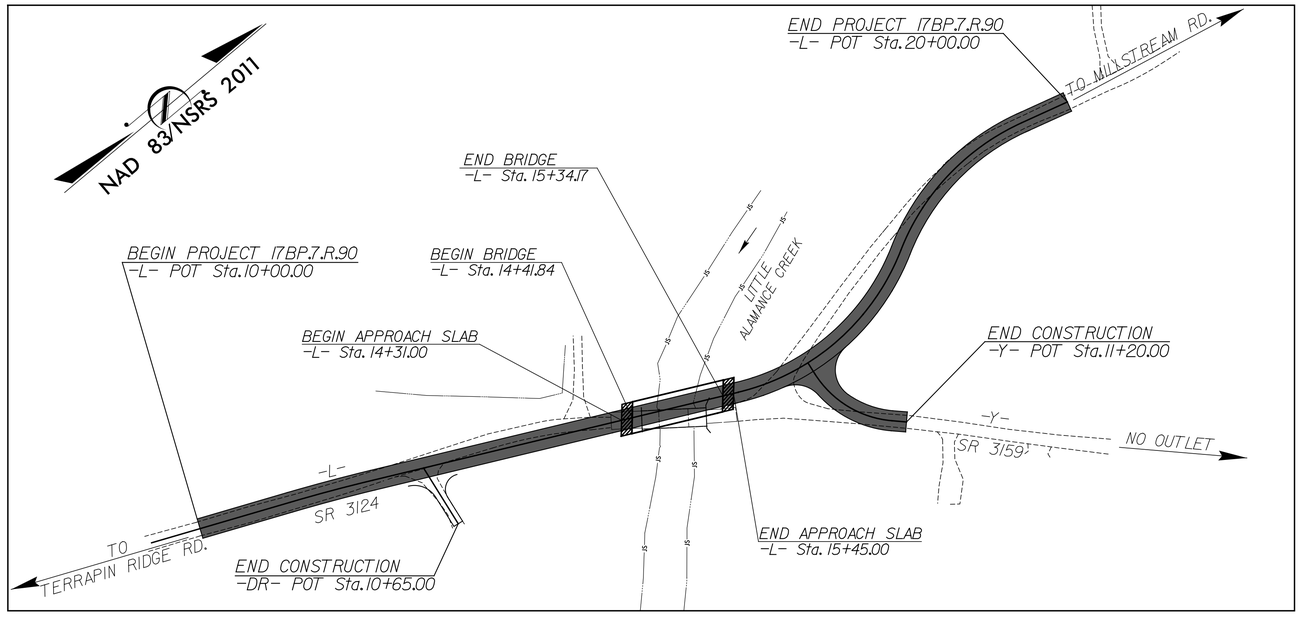

EROSION AND SEDIMENT CONTROL MEASURES

Std. #	Description	Symbol
1630.03	Temporary Silt Ditch	TSD
1630.05	Temporary Diversion	TD
1605.01	Temporary Silt Fence	
1606.01	Special Sediment Control Fence	
1622.01	Temporary Berms and Slope Drains	
1630.02	Silt Basin Type B	
1633.01	Temporary Rock Silt Check Type-A	
	Temporary Rock Silt Check Type-A with Matting and Polyacrylamide (PAM)	
1633.02	Temporary Rock Silt Check Type-B	
	Wattle/ Coir Fiber Wattle	EW CFW
	Wattle/ Coir Fiber Wattle with Polyacrylamide (PAM)	
1634.01	Temporary Rock Sediment Dam Type-A	
1634.02	Temporary Rock Sediment Dam Type-B	
1635.01	Rock Pipe Inlet Sediment Trap Type-A	
1635.02	Rock Pipe Inlet Sediment Trap Type-B	
1630.04	Stilling Basin	
1630.06	Special Stilling Basin	
	Rock Inlet Sediment Trap:	
1632.01	Type A	A
1632.02	Type B	B
1632.03	Type C	C
	Skimmer Basin	
	Tiered Skimmer Basin	
	Infiltration Basin	

THIS PROJECT CONTAINS EROSION CONTROL PLANS FOR CLEARING AND GRUBBING PHASE OF CONSTRUCTION.

THIS PROJECT HAS BEEN DESIGNED TO SENSITIVE WATERSHED STANDARDS.

ENVIRONMENTALLY SENSITIVE AREA(S) EXIST ON THIS PROJECT

Refer To E. C. Special Provisions for Special Considerations.

GRAPHIC SCALE

50 PLANS

50 PROFILE (HORIZONTAL)

10 PROFILE (VERTICAL)

THESE EROSION AND SEDIMENT CONTROL PLANS COMPLY WITH THE REGULATIONS SET FORTH BY THE NCG-010000 GENERAL CONSTRUCTION PERMIT EFFECTIVE AUGUST 1, 2016 AND ISSUED BY THE NORTH CAROLINA DEPARTMENT OF ENVIRONMENT AND NATURAL RESOURCES DIVISION OF WATER RESOURCES.

Prepared In the Office of:

HDR Engineering, Inc. of the Carolinas
555 Fayetteville St, Suite 900 Raleigh, N.C. 27601
N.C.B.E.L.S. License Number: F-0116

Designed by:

ALEXANDER D. SNIDER, PE ***3064***
NAME *LEVEL III CERTIFICATION NO.*

Reviewed In the Office of:

ROADSIDE ENVIRONMENTAL UNIT
1 South Wilmington St.
Raleigh, NC 27611

2018 STANDARD SPECIFICATIONS

Reviewed by:

JENNIFER PARISH, EI

Roadway Standard Drawings

The following roadway english standards as appear in "Roadway Standard Drawings"– Roadway Design Unit – N. C. Department of Transportation – Raleigh, N. C., dated January 2018 and the latest revison thereto are applicable to this project and by reference hereby are considered a part of these plans.

1604.01	Railroad Erosion Control Detail	1632.01	Rock Inlet Sediment Trap Type A
1605.01	Temporary Silt Fence	1632.02	Rock Inlet Sediment Trap Type B
1606.01	Special Sediment Control Fence	1632.03	Rock Inlet Sediment Trap Type C
1607.01	Gravel Construction Entrance	1633.01	Temporary Rock Silt Check Type A
1622.01	Temporary Berms and Slope Drains	1633.02	Temporary Rock Silt Check Type B
1630.01	Riser Basin	1634.01	Temporary Rock Sediment Dam Type A
1630.02	Silt Basin Type B	1634.02	Temporary Rock Sediment Dam Type B
1630.03	Temporary Silt Ditch	1635.01	Rock Pipe Inlet Sediment Trap Type A
1630.04	Stilling Basin	1635.02	Rock Pipe Inlet Sediment Trap Type B
1630.05	Temporary Diversion	1640.01	Coir Fiber Baffle
1630.06	Special Stilling Basin	1645.01	Temporary Stream Crossing
1631.01	Matting Installation		

$$$$$$$SYSTIME$$$$$$
$$$$$$$USERNAME$$$$$$
C:\PWWORKING\hdr\
guilford_17BP.7.R.90_Erosion Control\ead\v400210_hwd_ec_tsh.dgn

PROJECT REFERENCE NO.	SHEET NO.
17BP.7.R.90	EC-2

TEMPORARY ROCK SILT CHECK TYPE 'A' WITH EXCELSIOR MATTING AND POLYACRYLAMIDE (PAM)

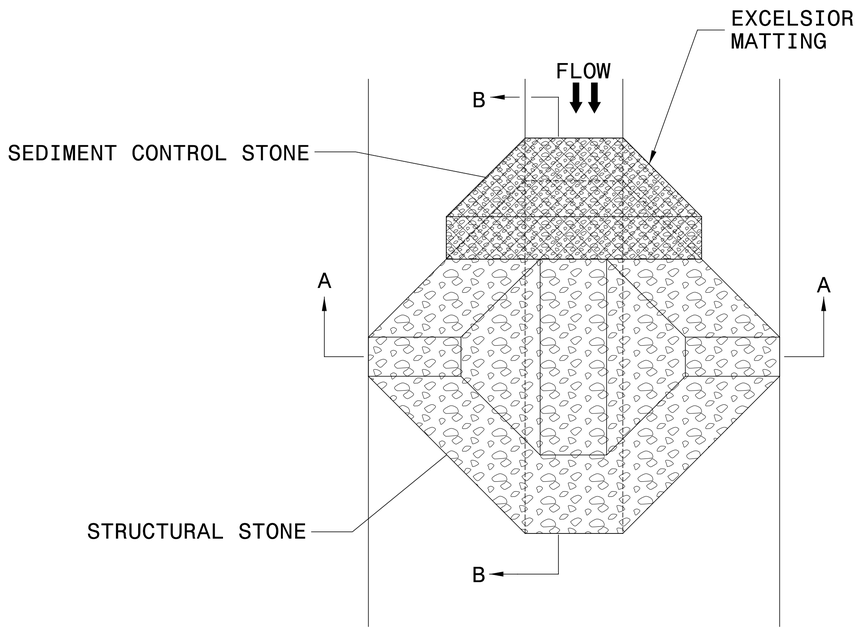

PLAN

NOTES:

INSTALL TEMPORARY ROCK SILT CHECK TYPE A IN ACCORDANCE WITH ROADWAY STANDARD DRAWING NO. 1633.01.

USE EXCELSIOR FOR MATTING MATERIAL AND ANCHOR MATTING SECTION AT TOP AND BOTTOM WITH CLASS B STONE.

PRIOR TO POLYACRYLAMIDE (PAM) APPLICATION, OBTAIN A SOIL SAMPLE FROM PROJECT LOCATION, AND FROM OFFSITE MATERIAL, AND ANALYZE FOR APPROPRIATE PAM FLOCCULANT TO BE APPLIED TO EACH ROCK SILT CHECK.

INITIALLY APPLY 4 OUNCES OF POLYACRYLAMIDE (PAM) TO TOP OF MATTING SECTION AND AFTER EVERY RAINFALL EVENT THAT EQUALS OR EXCEEDS 0.50 INCHES.

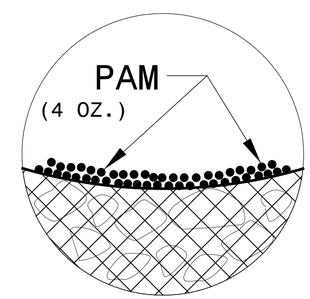

INSET A

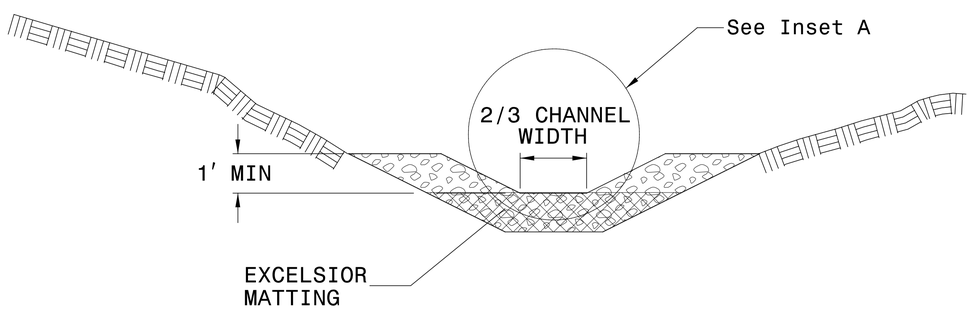

SECTION A-A

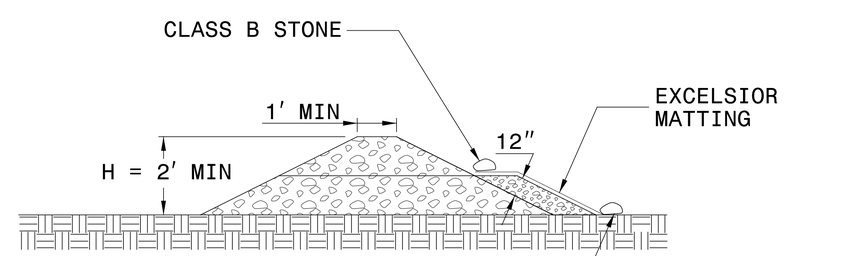

SECTION B-B

NOT TO SCALE

PROJECT REFERENCE NO.	SHEET NO.
17BP.7.R.90	EC-3
R/W SHEET NO.	
ROADSIDE ENVIRONMENTAL PROJECT ENGINEER	

LEVEL III CERTIFIED BY:
ALEXANDER D. SNIDER, PE
CERTIFICATION NUMBER: 3064
ISSUED: JANUARY 31, 2017

DIVISION OF HIGHWAYS
STATE OF NORTH CAROLINA

SOIL STABILIZATION SUMMARY SHEET

MATTING FOR EROSION CONTROL

CONST SHEET NO.	LINE	FROM STATION	TO STATION	SIDE	ESTIMATE (SY)
4	-L-	13+00	13+75	LT	55
4	-L-	15+56	16+08	RT	40
4	-L-	15+52	16+50	LT	70
4	-L-	16+48	17+00	RT	40
				SUBTOTAL	205
MISCELLANEOUS MATTING TO BE INSTALLED AS DIRECTED BY THE ENGINEER					7,730
				TOTAL	7,935
				SAY	8,000

PERMANENT SOIL REINFORCEMENT MAT

CONST SHEET NO.	LINE	FROM STATION	TO STATION	SIDE	ESTIMATE (SY)
4	-L-	12+50	14+45	RT	120
4	-L-	17+00	18+00	RT	70
4	-L-	19+00	19+50	RT	30
4	-Y-	10+40	10+80	LT	25
4	-DR-	10+35	10+45	LT	5
4	-DR-	10+35	10+45	RT	5
				SUBTOTAL	255
PSRM TO BE INSTALLED PER ROADWAY PLANS					2,870
				TOTAL	3,125
				SAY	3,200

PROJECT REFERENCE NO.	SHEET NO.
17BP.7.R.90	EC-3A

DIVISION OF HIGHWAYS
STATE OF NORTH CAROLINA

SOIL STABILIZATION TIMEFRAMES

SITE DESCRIPTION	STABILIZATION TIME	TIMEFRAME EXCEPTIONS
PERIMETER DIKES, SWALES, DITCHES AND SLOPES	7 DAYS	NONE
HIGH QUALITY WATER (HQW) ZONES	7 DAYS	NONE
SLOPES STEEPER THAN 3:1	7 DAYS	IF SLOPES ARE 10' OR LESS IN LENGTH AND ARE NOT STEEPER THAN 2:1, 14 DAYS ARE ALLOWED.
SLOPES 3:1 OR FLATTER	14 DAYS	7 DAYS FOR SLOPES GREATER THAN 50' IN LENGTH.
ALL OTHER AREAS WITH SLOPES FLATTER THAN 4:1	14 DAYS	NONE, EXCEPT FOR PERIMETERS AND HQW ZONES.

PROJECT REFERENCE	SHEET NO.
17BP.7.R.90 – GUILFORD 210	EC-04/CONST.04
ROADSIDE ENVIRONMENTAL PROJECT ENGINEER	

LEVEL III CERTIFIED BY:
ALEXANDER D. SNIDER, PE
CERTIFICATION NUMBER: 3064
ISSUED: JANUARY 31, 2017

Prepared in the Office of:

MOTT MACDONALD
PO Box 700
Fuquay-Varina, NC 27526
www.mottmac.com

HDR Engineering, Inc. of the Carolinas
555 Fayetteville St. Suite 900 Raleigh, N.C. 27601
N.C.B.E.L.S. License Number: F-0116

CLEARING AND GRUBBING EROSION CONTROL FOR CONSTRUCTION SHEET 04

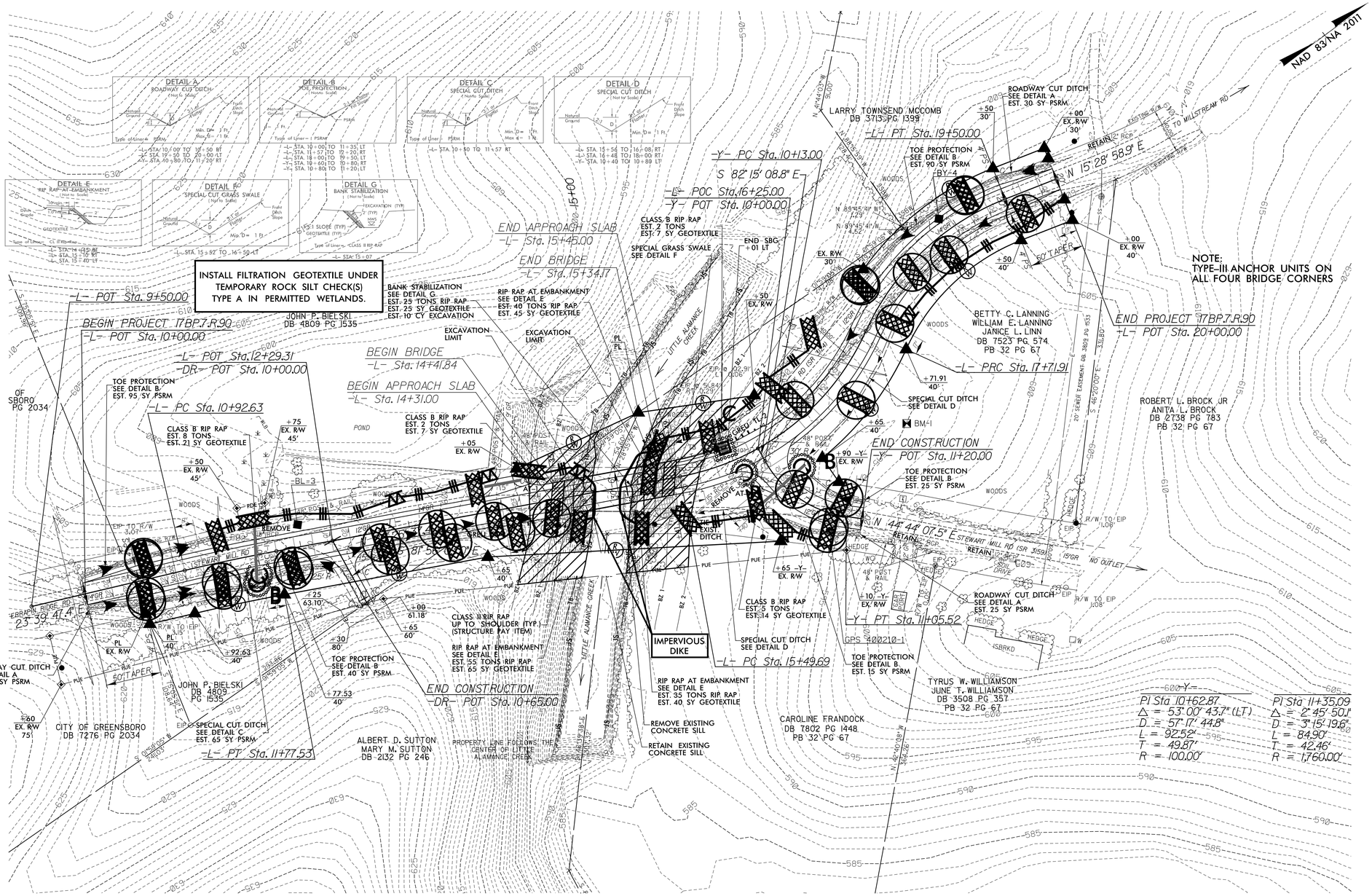

ENVIRONMENTALLY SENSITIVE AREA
SEE PROJECT SPECIAL PROVISIONS

NOTE:
PLACE TEMPORARY ROCK SEDIMENT DAMS TYPE – B AND TEMPORARY ROCK SILT CHECKS TYPE – A AT DRAINAGE OUTLETS.

NOTE:
PERIMETER EROSION CONTROL MEASURES SHALL BE INSTALLED DURING CLEARING AND GRUBBING PHASE.

NOTE:
ALL EROSION CONTROL DEVICES SHOWN ARE LOCATED WITHIN EXISTING R/W OR EASEMENT.

ICA ENGINEERING, INC.
J:\Hydro\DDC\Guilford_210\Hydraulics\Erosion Control\eadd\400210_hyd_ec_c&g_psh.dgn
$$$$DATE$$$$ $$$$$$$$SYSTIME$$$$$$$$

PROJECT REFERENCE	SHEET NO.
17BP.7.R.90 – GUILFORD 210	EC-05/CONST.04

ROADSIDE ENVIRONMENTAL PROJECT ENGINEER

LEVEL III CERTIFIED BY:
ALEXANDER D. SNIDER, PE
CERTIFICATION NUMBER: 3064
ISSUED: JANUARY 31, 2017

Prepared in the Office of:

MOTT MACDONALD
PO Box 700
Fuquay-Varina, NC 27526
www.mottmac.com

HDR Engineering, Inc. of the Carolinas
555 Fayetteville St. Suite 900 Raleigh, N.C. 27601
N.C.B.E.L.S. License Number: F-0116

FINAL EROSION CONTROL FOR CONSTRUCTION SHEET 04

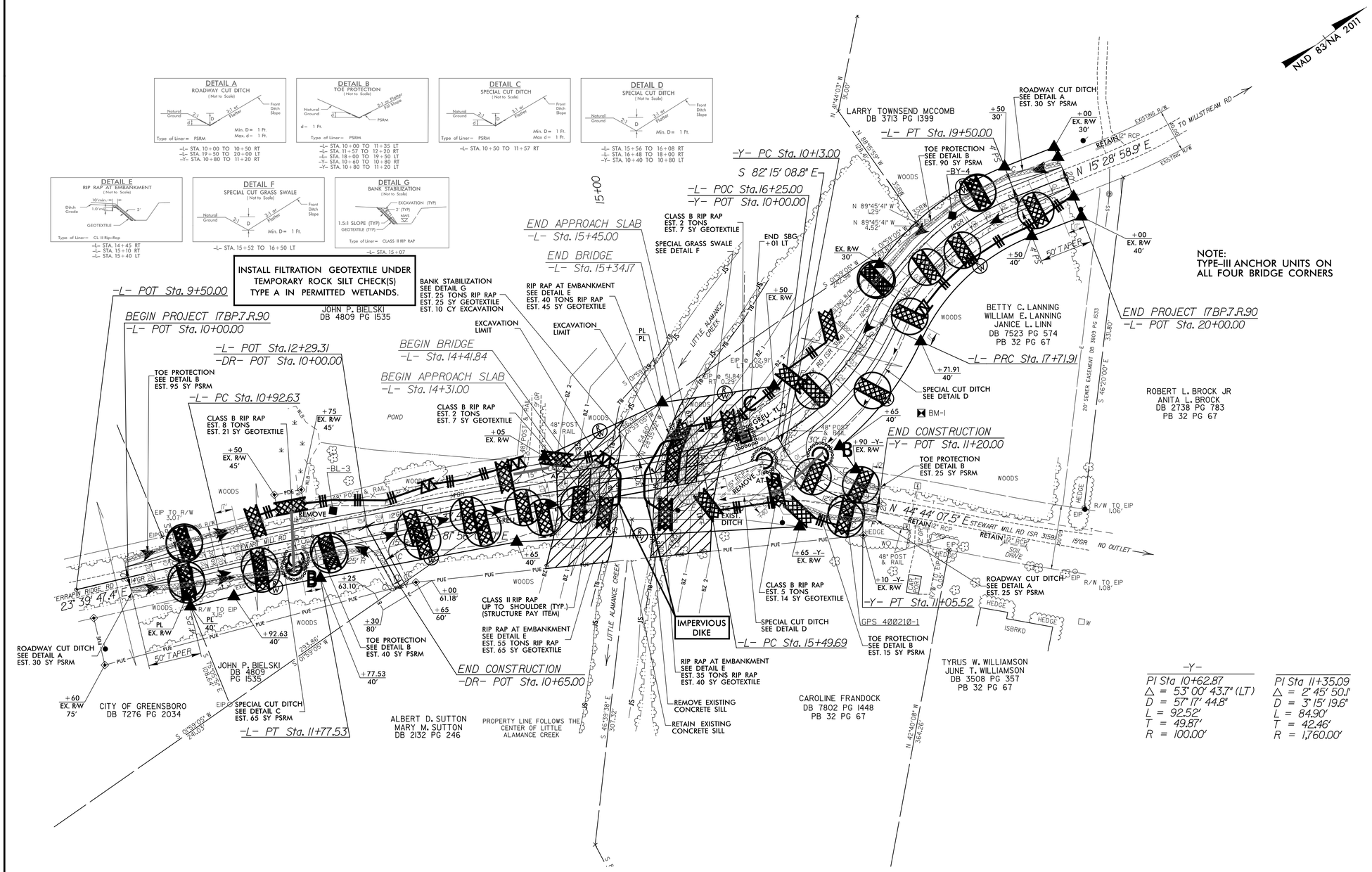

-Y-

PI Sta 10+62.87
Δ = 53° 00' 43.7" (LT)
D = 57° 17' 44.8"
L = 92.52'
T = 49.87'
R = 100.00'

PI Sta 11+35.09
Δ = 2° 45' 50.1"
D = 3° 15' 19.6"
L = 84.90'
T = 42.46'
R = 1,760.00'

ICA ENGINEERING, INC.
J:\Hydro\DDC\Guilford_210\Hydraulics\Erosion Control\cadd\400210_hyd_ec_final_psh.dgn
$$DATE$$ $$$$$$SYSTIME$$$$$

STATE	STATE PROJECT REFERENCE NO.	SHEET NO.	TOTAL SHEETS
N.C.	17BP.7.R.90	RF-1	
STATE PROJ. NO.	F. A. PROJ. NO.	DESCRIPTION	

PLANTING DETAILS

SEEDLING / LINER BAREROOT PLANTING DETAIL

HEALING IN

1. Locate a healing-in site in a shady, well protected area.
2. Excavate a flat bottom trench 12 inches deep and provide drainage.

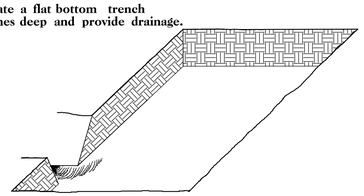

3. Backfill the trench with 2 inches well rotted sawdust. Place a 2 inch layer of well rotted sawdust at a sloping angle at one end of the trench.

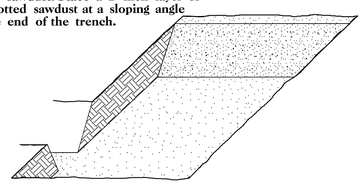

4. Place a single layer of plants against the sloping end so that the root collar is at ground level.

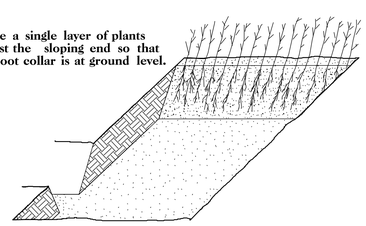

5. Place a 2 inch layer of well rotted sawdust over the roots maintaining a sloping angle.

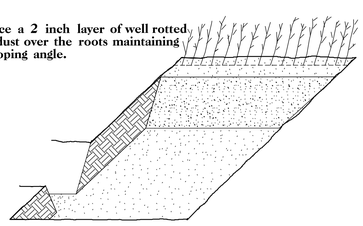

6. Repeat layers of plants and sawdust as necessary and water thoroughly.

DIBBLE PLANTING METHOD
USING THE KBC PLANTING BAR

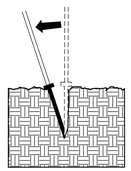

1. Insert planting bar as shown and pull handle toward planter.

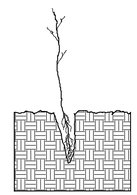

2. Remove planting bar and place seedling at correct depth.

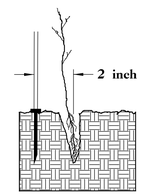

3. Insert planting bar 2 inches toward planter from seedling.

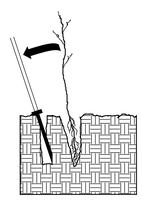

4. Pull handle of bar toward planter, firming soil at bottom.

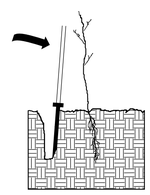

5. Push handle forward firming soil at top.

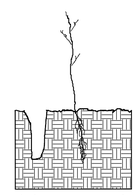

6. Leave compaction hole open. Water thoroughly.

PLANTING NOTES:

PLANTING BAG
During planting, seedlings shall be kept in a moist canvas bag or similar container to prevent the root systems from drying.

KBC PLANTING BAR
Planting bar shall have a blade with a triangular cross section, and shall be 12 inches long, 4 inches wide and 1 inch thick at center.

ROOT PRUNING
All seedlings shall be root pruned, if necessary, so that no roots extend more than 10 inches below the root collar.

REFORESTATION

☐ TREE REFORESTATION SHALL BE PLANTED 6 FT. TO 10 FT. ON CENTER, RANDOM SPACING, AVERAGING 8 FT. ON CENTER, APPROXIMATELY 680 PLANTS PER ACRE.

REFORESTATION

MIXTURE, TYPE, SIZE, AND FURNISH SHALL CONFORM TO THE FOLLOWING:

25%	LIRIODENDRON TULIPIFERA	TULIP POPLAR	12 in – 18 in BR
25%	PLATANUS OCCIDENTALIS	AMERICAN SYCAMORE	12 in – 18 in BR
25%	FRAXINUS PENNSYLVANICA	GREEN ASH	12 in – 18 in BR
25%	BETULA NIGRA	RIVER BIRCH	12 in – 18 in BR

REFORESTATION DETAIL SHEET

N.C.D.O.T. - ROADSIDE ENVIRONMENTAL UNIT

*DESIGN EXCEPTION:
MIN. HORIZONTAL CURVE RADIUS
SAG VERTICAL CURVE K
HORIZONTAL SSD
VERTICAL SSD

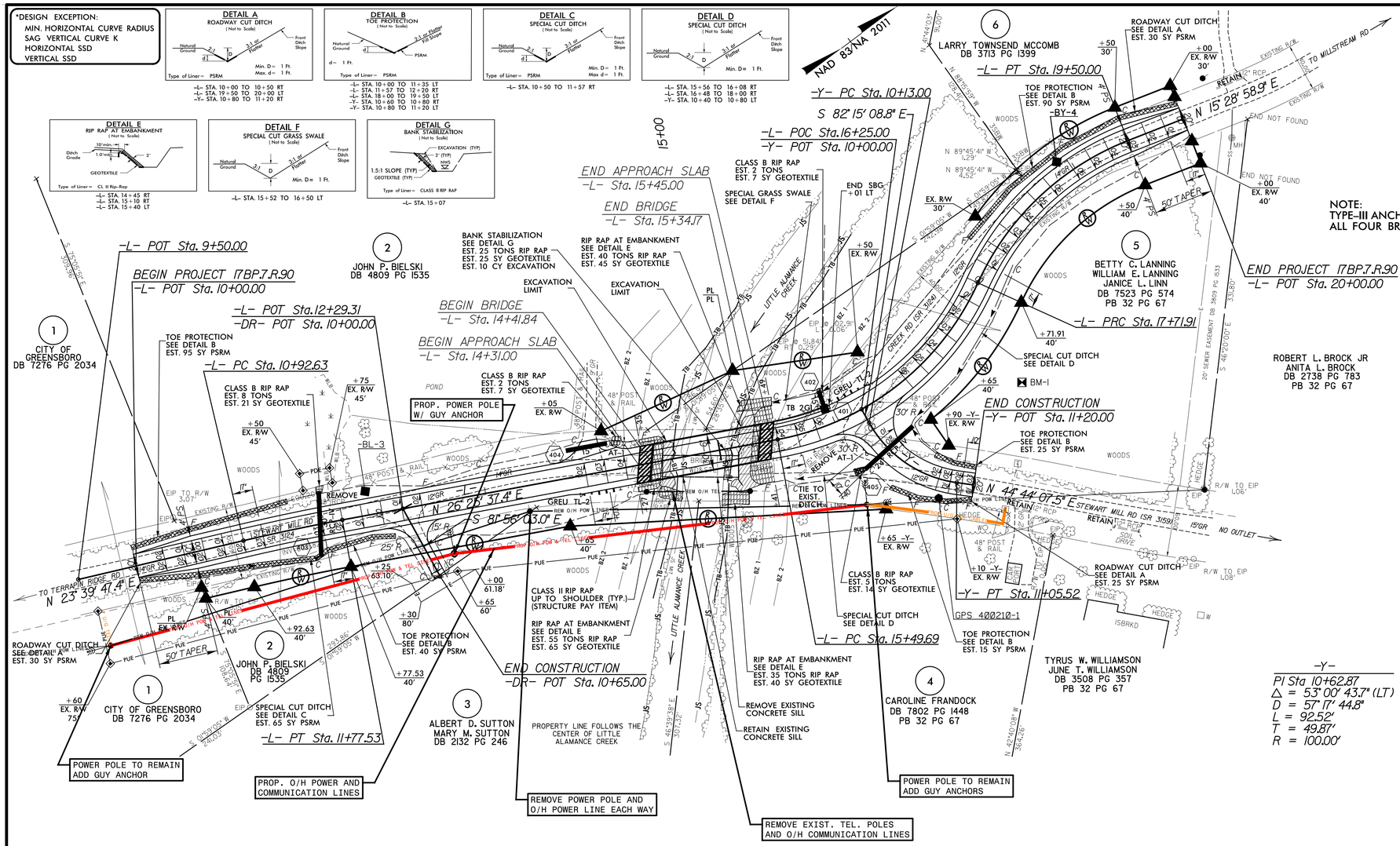

NOTE:
TYPE-III ANCHOR UNITS ON ALL FOUR BRIDGE CORNERS

-Y-
PI Sta 10+62.87
Δ = 53° 00' 43.7" (LT)
D = 57° 17' 44.8"
L = 92.52'
T = 49.87'
R = 100.00'

-L-		
PI Sta 11+35.09	PI Sta 16+70.24	PI Sta 18+65.65
Δ = 2° 45' 50.1" (RT)	Δ = 55° 07' 04.2" (LT)	Δ = 44° 10' 25.7" (RT)
D = 3° 15' 19.6"	D = 24° 48' 12.1"	D = 24° 48' 12.1"
L = 84.90'	L = 222.22'	L = 178.10'
T = 42.46'	T = 120.55'	T = 93.74'
R = 1,760.00'	R = 231.00'	R = 231.00'

PROJECT REFERENCE	SHEET NO.
17BP.7.R.90 – GUILFORD 210	UO-1

Prepared in the Office of:

THE WOOTEN COMPANY
120 North Boylan Avenue Raleigh NC 27603-1423
919.828.0531 fax 919.834.3589
License Number: F-0115
THE WOOTEN COMPANY LICENSE NO. F-0115

DOCUMENT NOT CONSIDERED FINAL UNLESS ALL SIGNATURES COMPLETED

GRAPHIC SCALE 25' 0 25' 50'

UTILITIES BY OTHERS

NOTE:
ALL PROPOSED UTILITY WORK SHOWN ON THIS SHEET WILL BE DONE BY OTHERS

$$DATE$$
$$SYSTIME$$
$$DGN$$
$$SFRNAME$$

0 5 10	PROJECT REFERENCE	SHEET NO.
	17BP.7.R.90 – GUILFORD 210	X-1

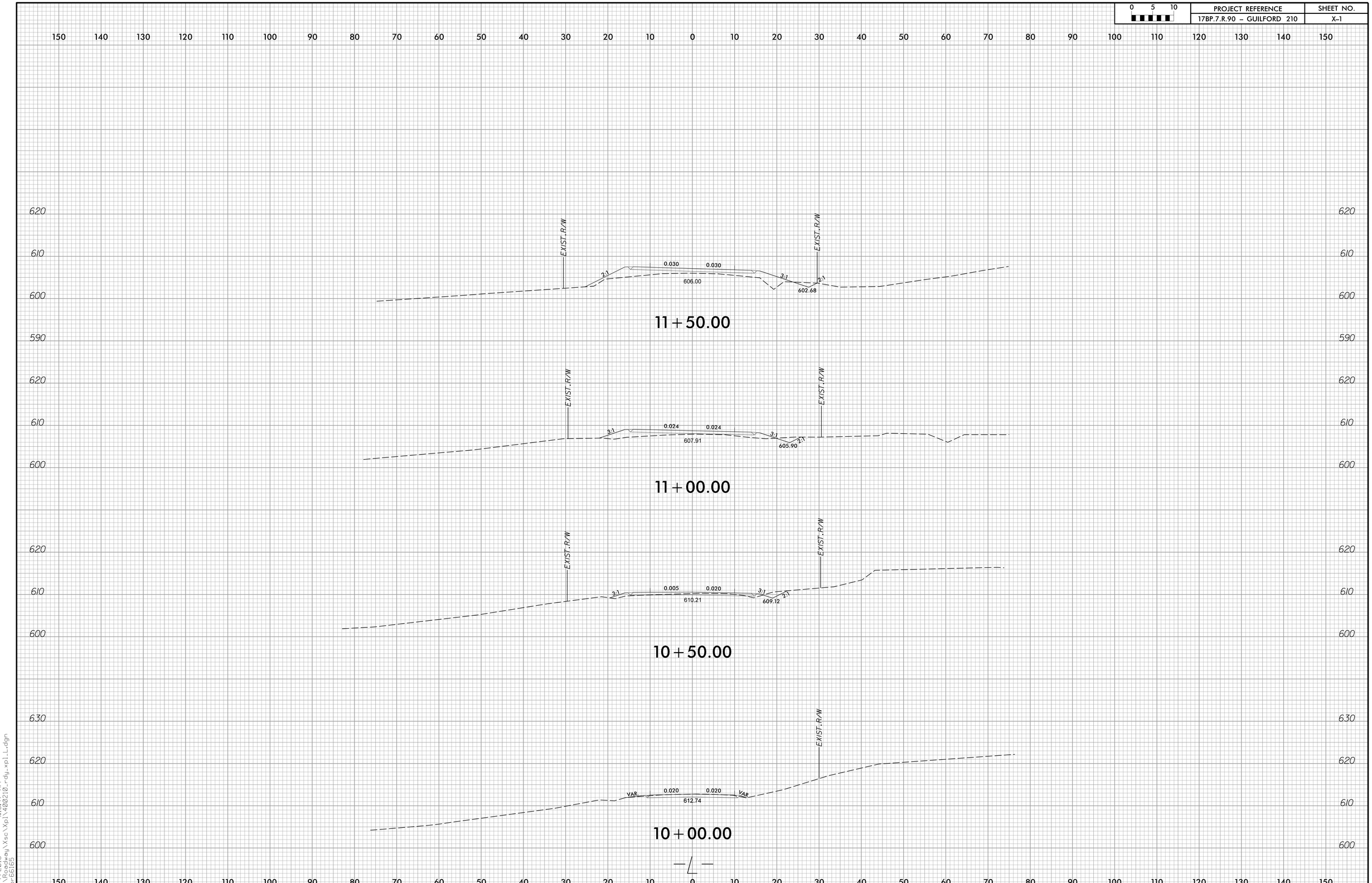

2/7/2018 9:16:47 AM
R:\Roadway\Xsc\Xpl\400210_rdy_xpl_L.dgn
jor66165

0 5 10	PROJECT REFERENCE	SHEET NO.
	17BP.7.R.90 – GUILFORD 210	X-2

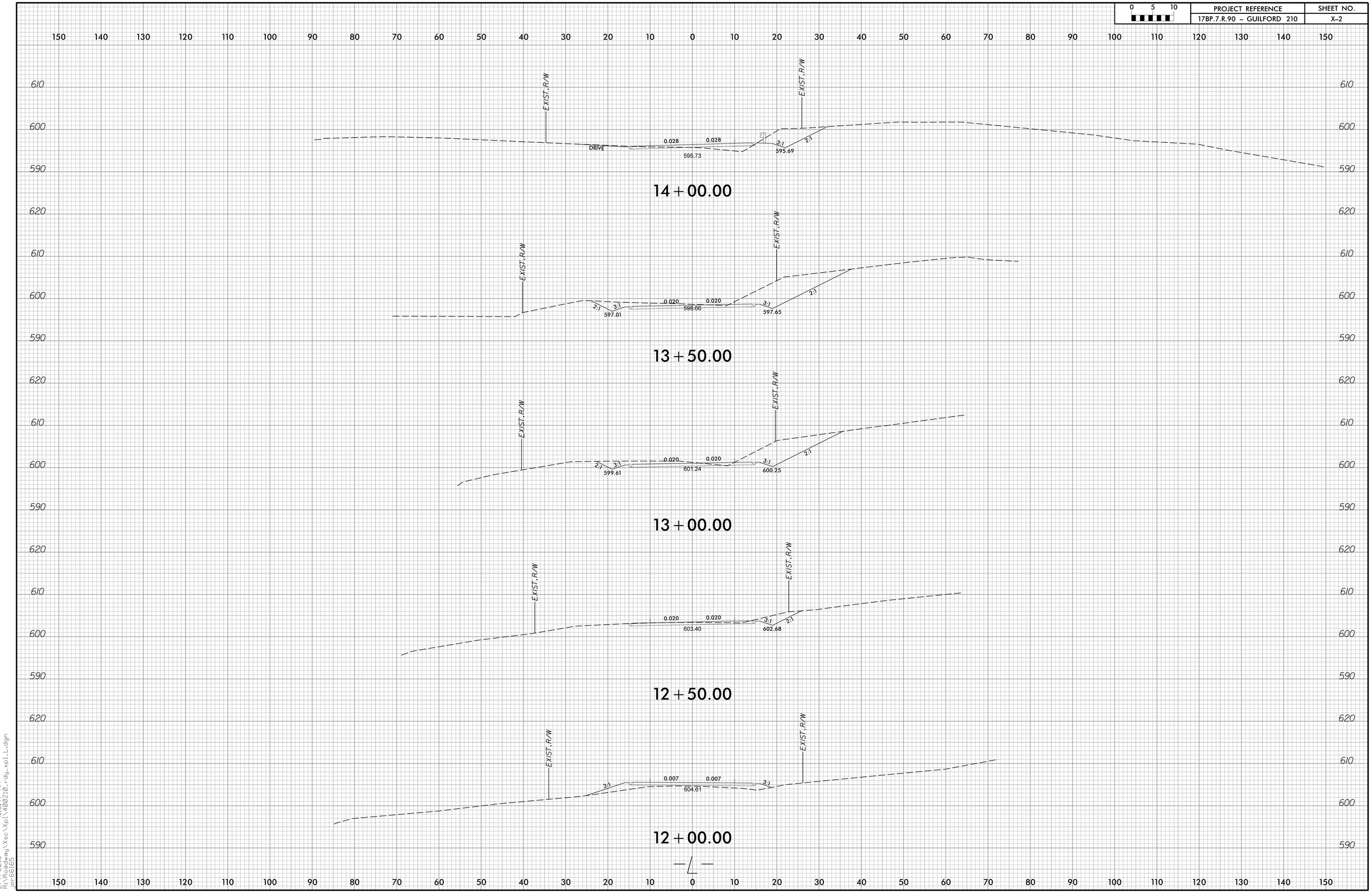

2/7/2018 9:16:47 AM
R:\Roadway\Xsc\Xpl\400210_rdy_xpl_L.dgn
jor6165

0 5 10	PROJECT REFERENCE	SHEET NO.
	17BP.7.R.90 – GUILFORD 210	X–3

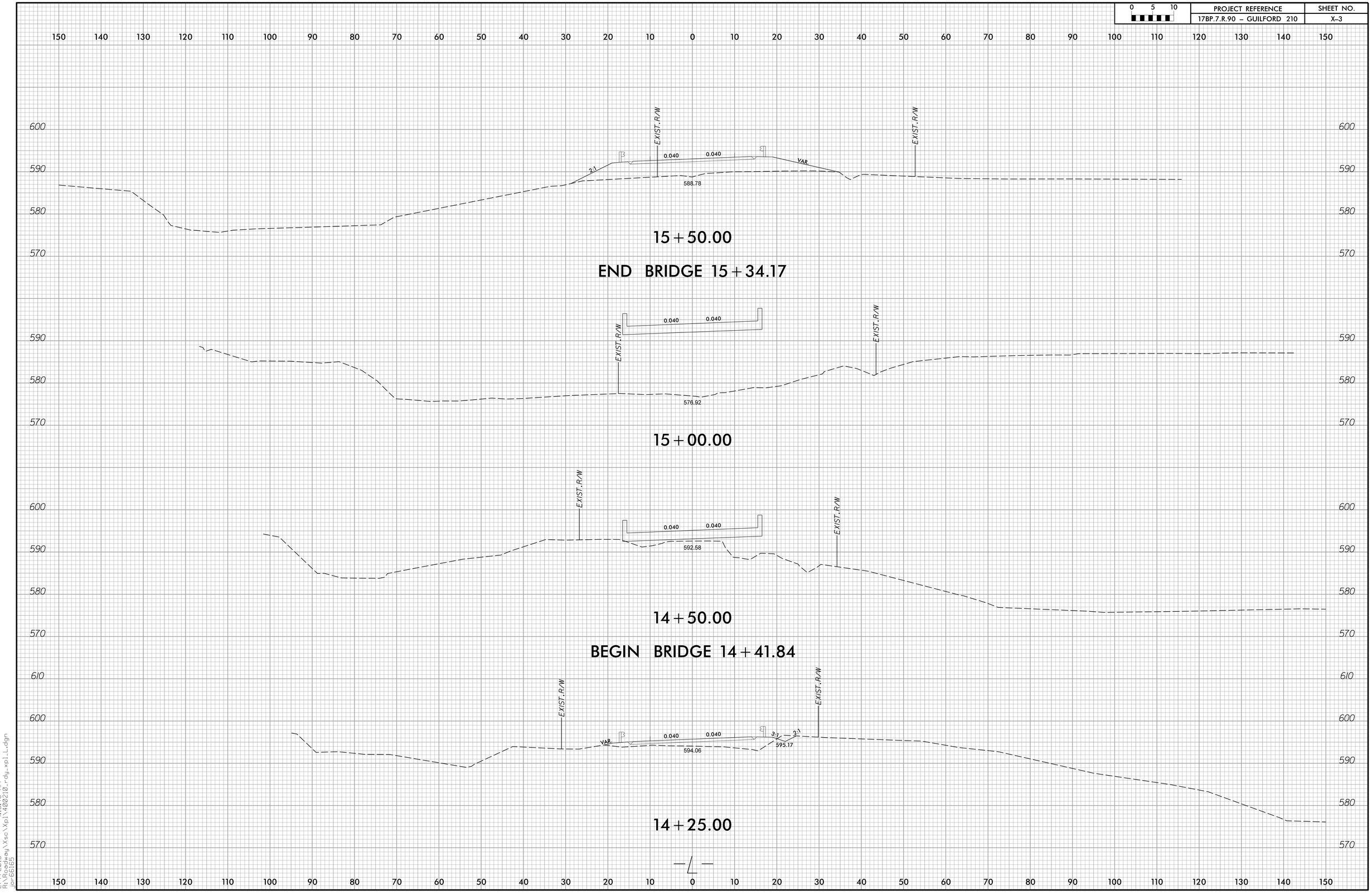

2/7/2018 9:16:48 AM
R:\Roadway\Xsc\Xpl\4002i0_rdy_xpl_L.dgn
jor6165

0 5 10	PROJECT REFERENCE	SHEET NO.
	17BP.7.R.90 – GUILFORD 210	X-4

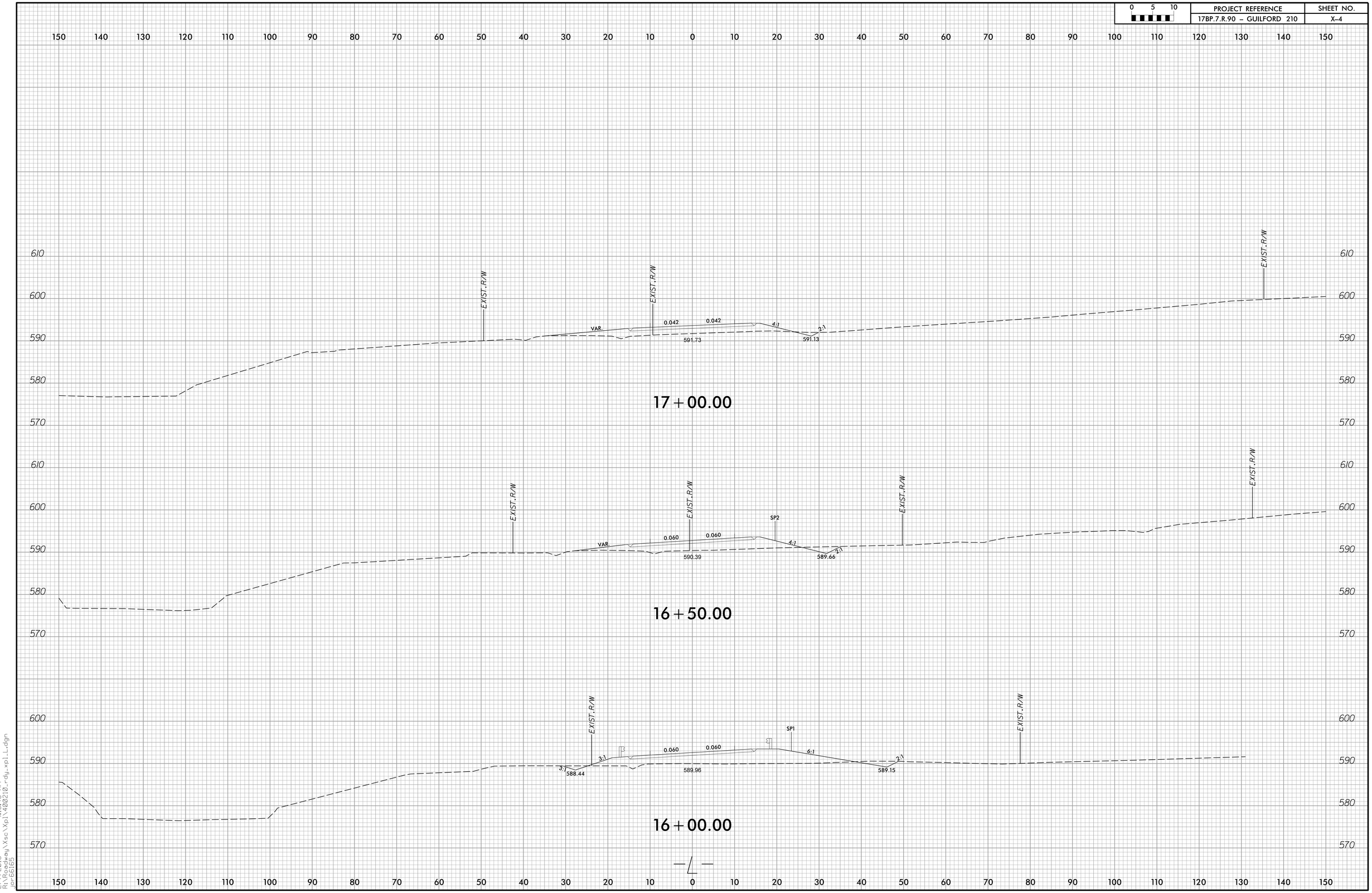

2/7/2018 9:16:48 AM
R:\Roadway\Xsc\Xpl\4100210_rdy_xpl_L.dgn
jor6615

0 5 10	PROJECT REFERENCE	SHEET NO.
	17BP.7.R.90 – GUILFORD 210	X-5

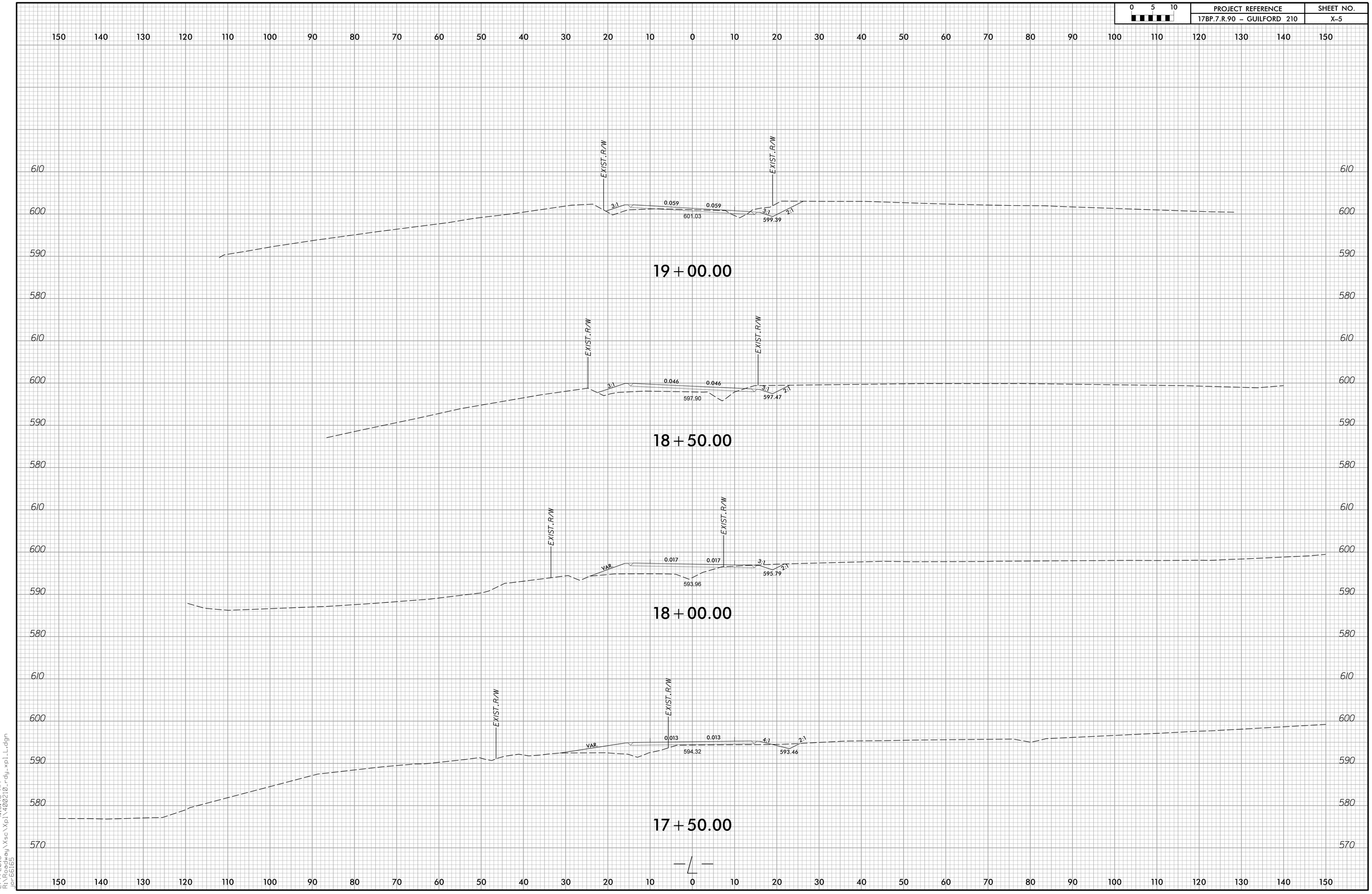

2/7/2018 9:16:48 AM
R:\Roadway\Xsc\Xpl\4002i0_rdy_xpl_L.dgn
jor6616S

0 5 10	PROJECT REFERENCE	SHEET NO.
	17BP.7.R.90 – GUILFORD 210	X–6

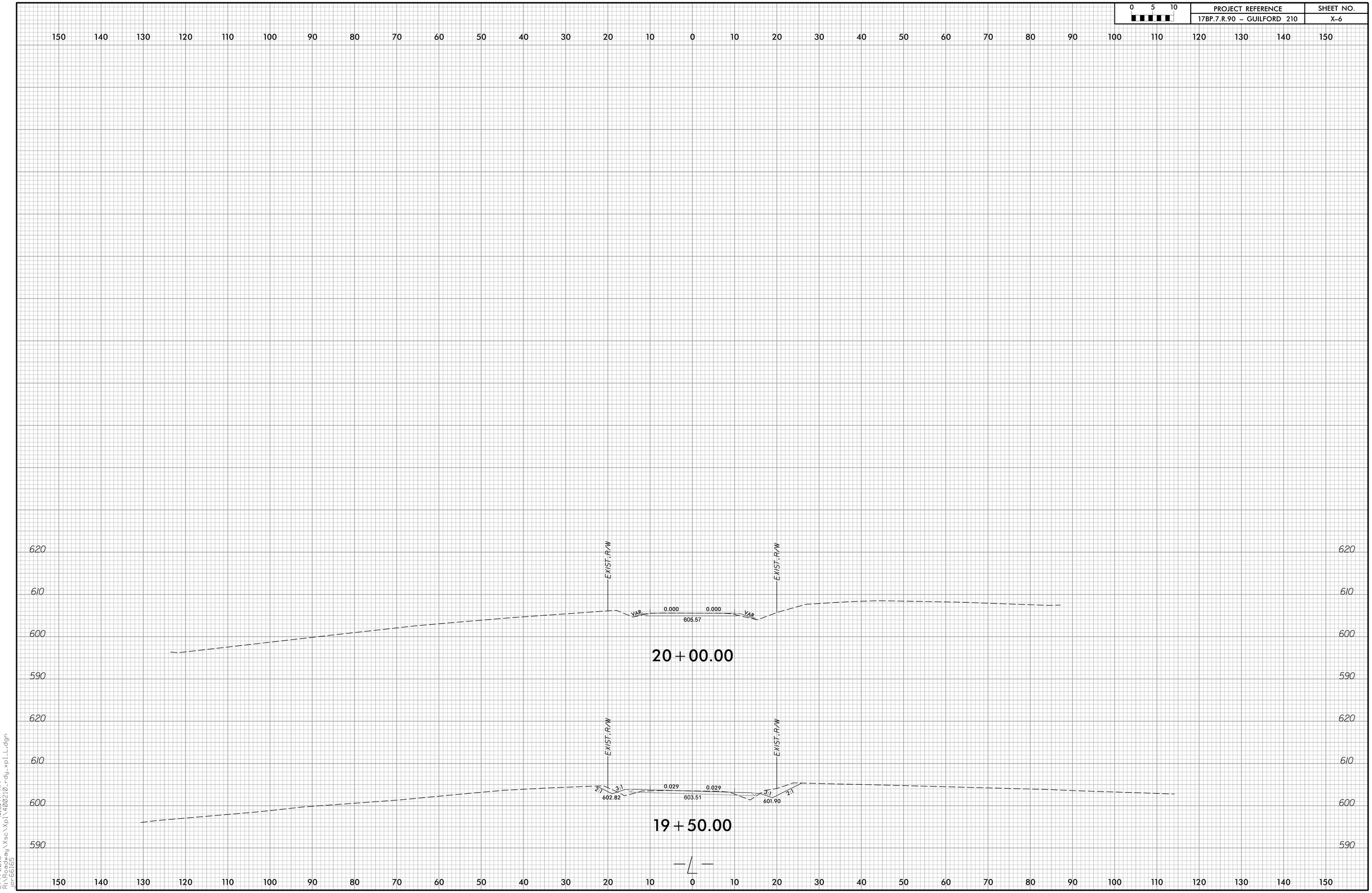

2/7/2018 9:16:47 AM
R:\Roadway\Xsc\Xpl\4000210_rdy_xpl_L.dgn
jor6165

0 5 10	PROJECT REFERENCE	SHEET NO.
	17BP.7.R.90 – GUILFORD 210	X–7

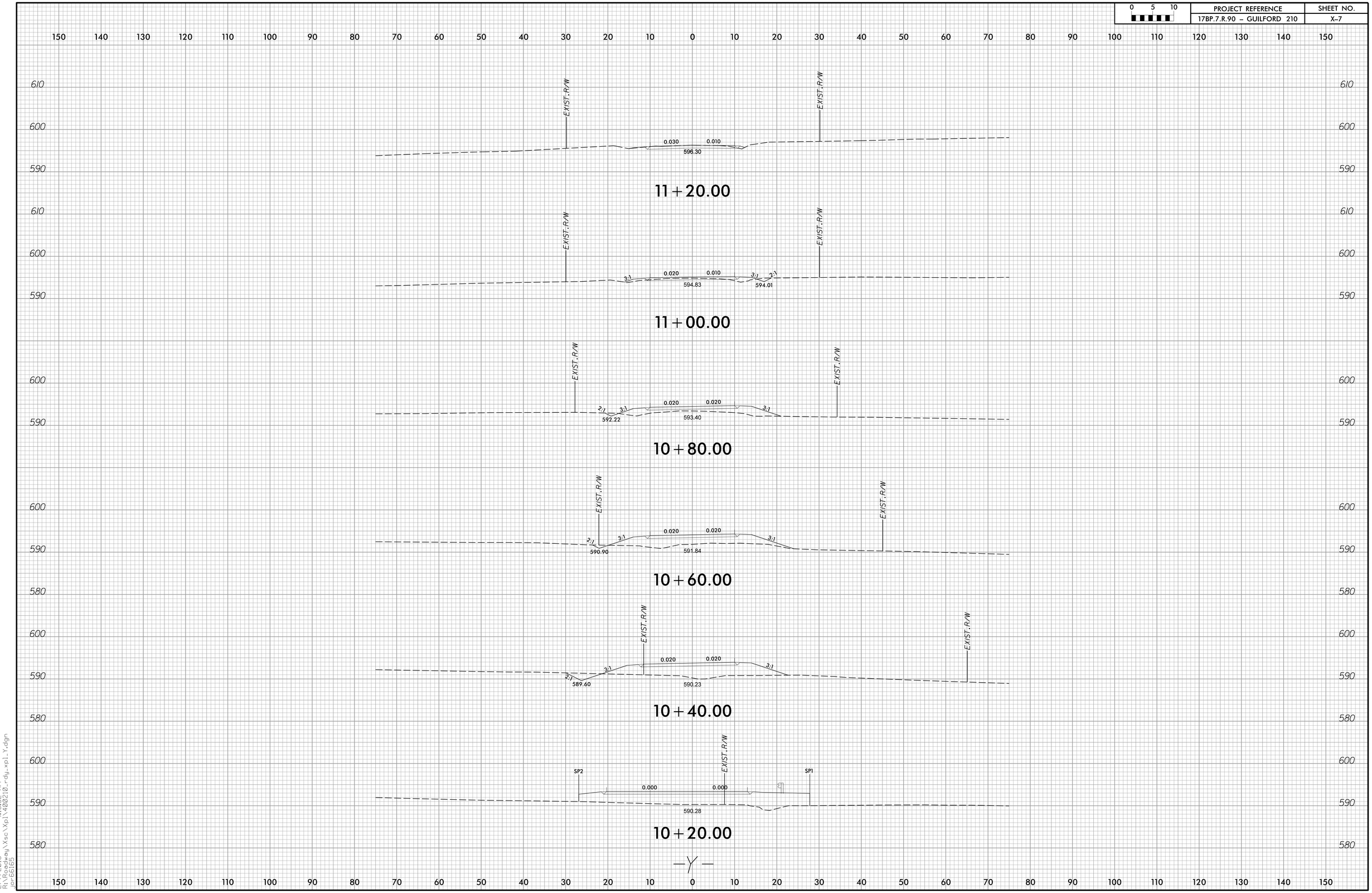

2/7/2018 9:16:52 AM
R:\Roadway\Xsc\Xpl\400210_rdy_xpl_Y.dgn
jor6615

0 5 10	PROJECT REFERENCE	SHEET NO.
	17BP.7.R.90 – GUILFORD 210	X–8

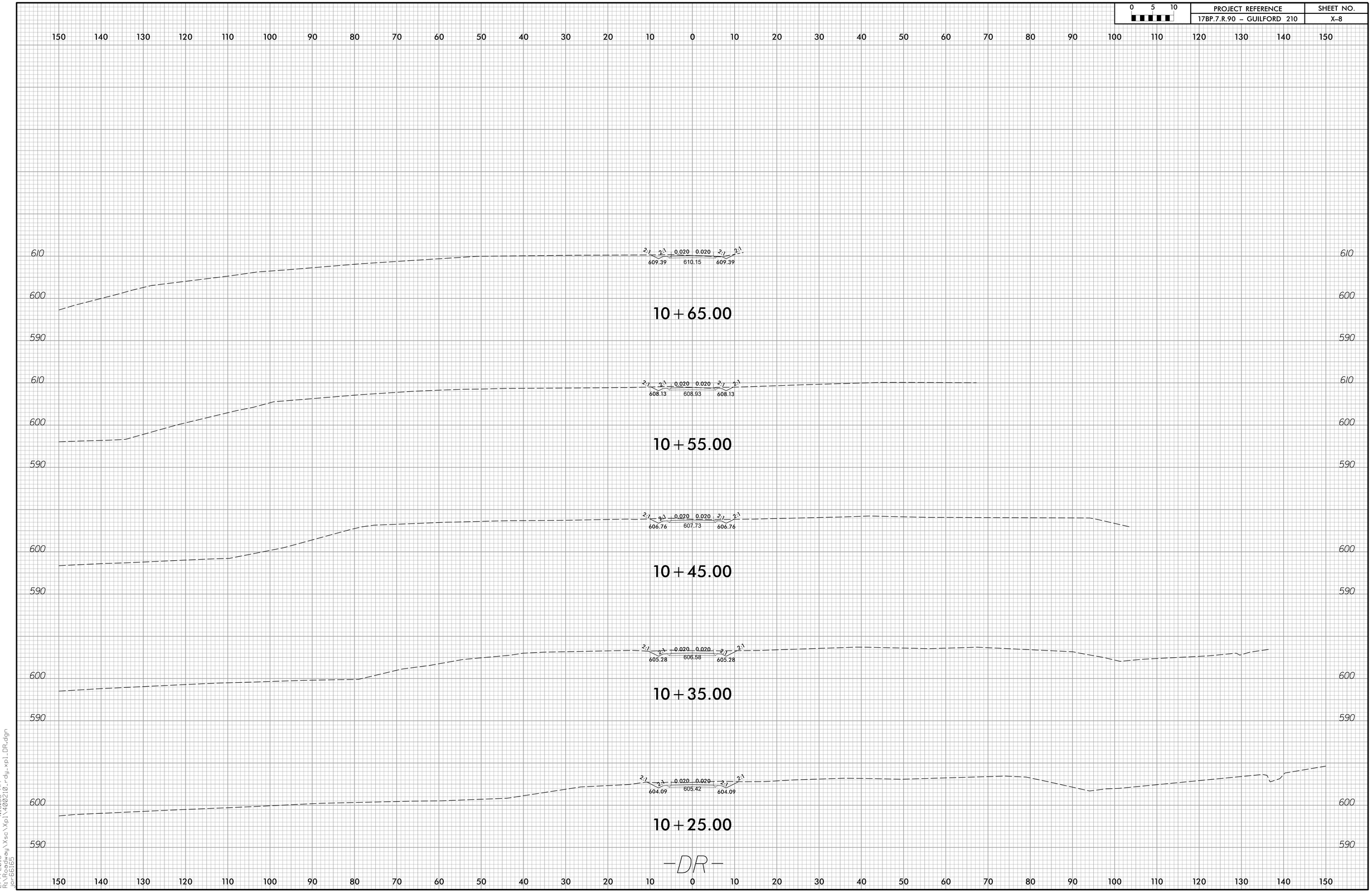

2/7/2018 9:16:55 AM
R:\Roadway\Xsc\Xpl\4002i0_rdy_xpl_DR.dgn
jor6165

DocuSign Envelope ID: 96A2AB8B-1CC7-460E-BC8D-E3B3DB7C39B9

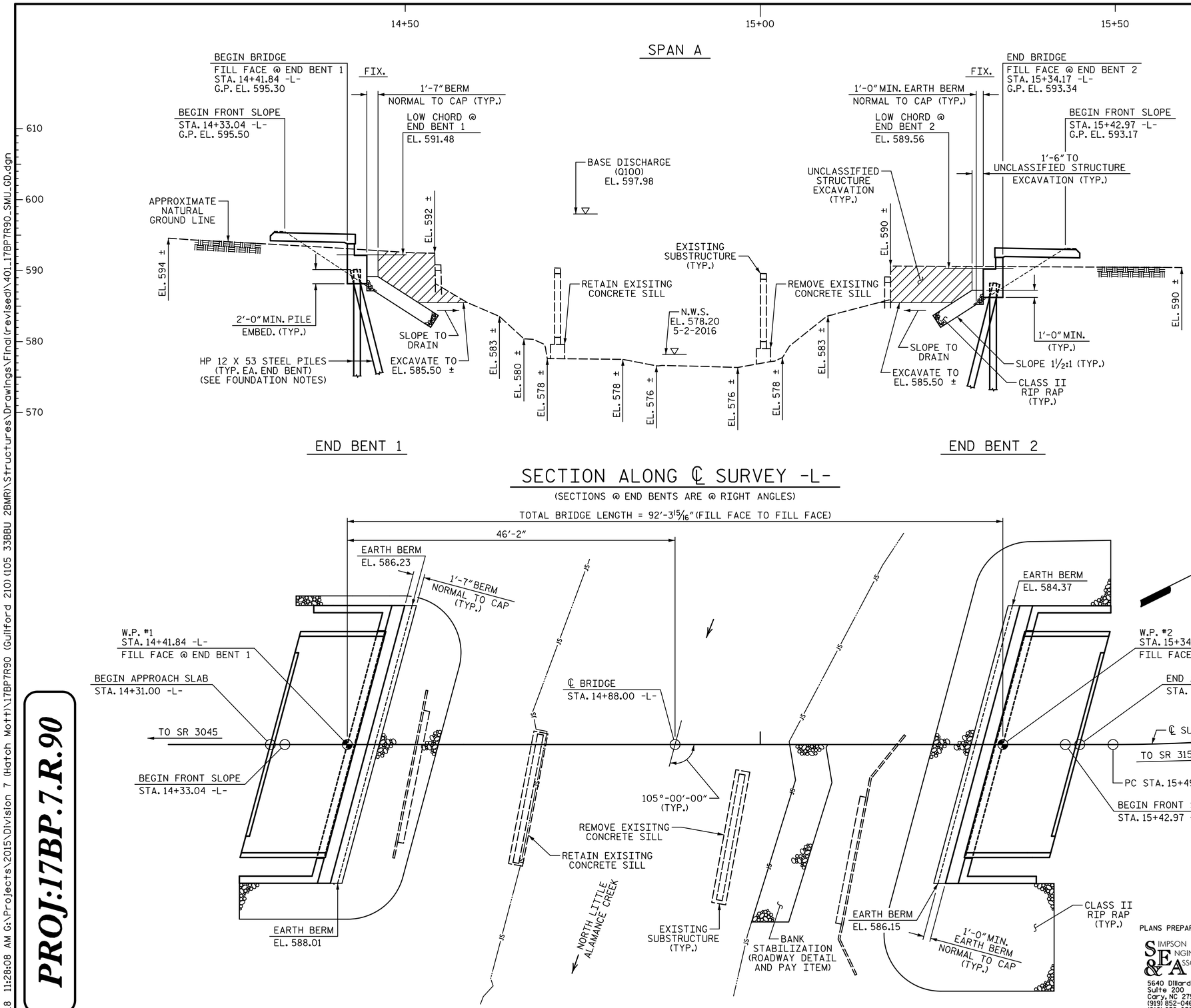

SECTION ALONG ℄ SURVEY -L-

(SECTIONS @ END BENTS ARE @ RIGHT ANGLES)

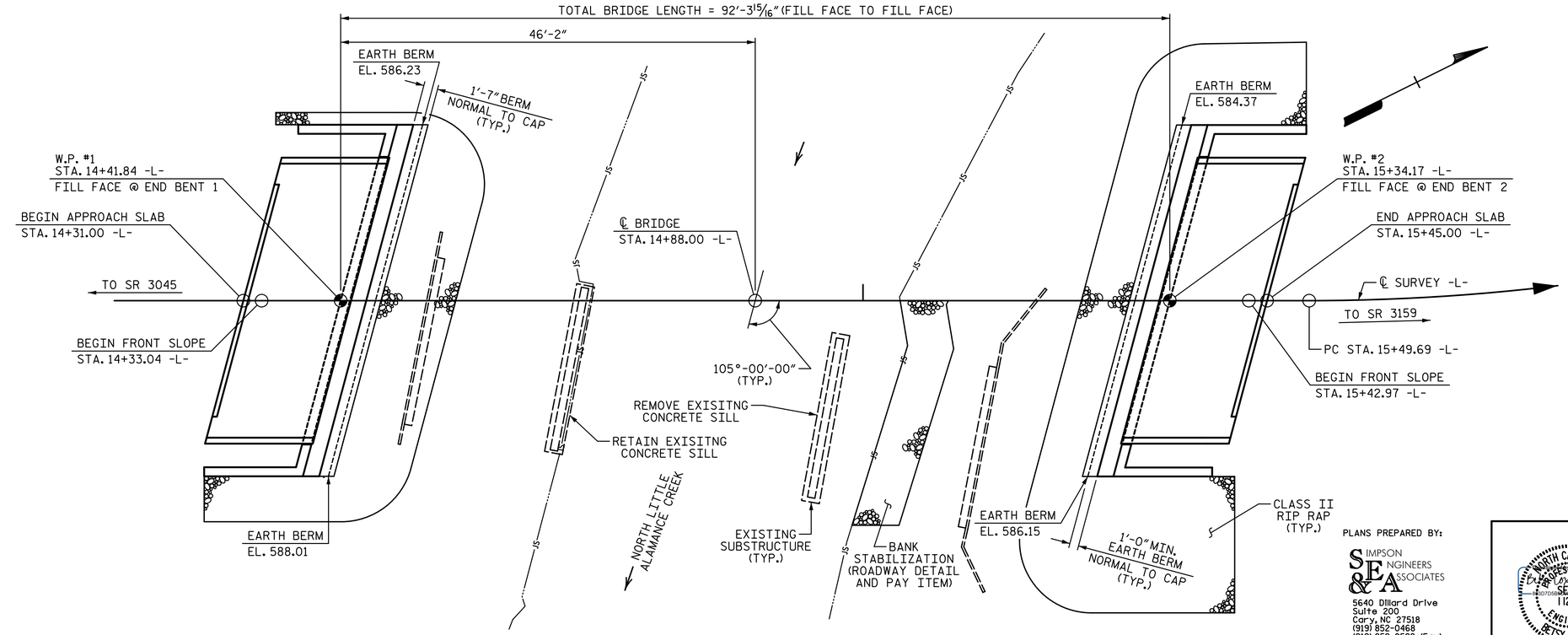

PLAN

(PILES NOT SHOWN IN PLAN VIEW)

(-)5.5769% (-)2.1259%

PVI STA. 13+80.00
EL. = 596.61
VC = 130'

(-)2.1259% (+)4.2000%

PVI STA. 16+50.00
EL. = 590.87
VC = 240'

GRADE DATA -L-

HYDRAULIC DATA:

DESIGN DISCHARGE	= 5200 CFS
FREQUENCY OF DESIGN FLOOD	= 10 YEAR
DESIGN HIGH WATER ELEVATION	= 592.80
DRAINAGE AREA	= 39.1 SQ. MI.
BASE DISCHARGE (Q 100)	= 9900 CFS
BASE HIGH WATER ELEVATION	= 597.98

OVERTOPPING FLOOD DATA:

OVERTOPPING DISCHARGE	= 5600 CFS
FREQUENCY OF OVERTOPPING FLOOD	= 10+ YEAR
OVERTOPPING FLOOD ELEVATION	= 593.40 ✱✱

✱✱ OVERTOPPING OCCURS AT ROADWAY SAG STA. 16+11.00-L- AT ROADWAY SUPER HIGH (RIGHT) SIDE

HORIZONTAL CURVE DATA

PI STA. 16+70.24 -L-
Δ = 55°-07'-04.2" (LT.)
D = 24°-48'-12.1"
L = 222.22'
T = 120.55'
R = 231.00'

I HEREBY CERTIFY THESE PLANS ARE THE AS-BUILT PLANS

PROJECT NO. 17BP.7.R.90
GUILFORD COUNTY
STATION: 14+88.00 -L-

SHEET 1 OF 2 REPLACES BRIDGE #210

STATE OF NORTH CAROLINA
DEPARTMENT OF TRANSPORTATION
RALEIGH

GENERAL DRAWING

FOR BRIDGE ON SR 3124
(STEWART MILL RD.) OVER
NORTH LITTLE ALAMANCE CREEK
BETWEEN SR 3045 AND SR 3159
30'-6" CLEAR ROADWAY - 105° SKEW

PROJ:17BP.7.R.90

DRAWN BY: T. BANKOVICH DATE: 3-18
CHECKED BY: B.S. COX DATE: 3-18
DESIGN ENGINEER OF RECORD: B.S. COX DATE: 3-18

PLANS PREPARED BY:
SIMPSON ENGINEERS & ASSOCIATES
5640 Dillard Drive
Suite 200
Cary, NC 27518
(919) 852-0468
(919) 852-0598 (Fax)
www.simpsonengr.com
LICENSURE NO. C-2521

NORTH CAROLINA PROFESSIONAL SEAL 11268 ENGINEER BETSY S. COX
3/20/2018

DOCUMENT NOT CONSIDERED FINAL UNLESS ALL SIGNATURES COMPLETED

REVISIONS								SHEET NO.
NO.	BY:	DATE:	NO.	BY:	DATE:			S-1
1			3					TOTAL SHEETS
2			4					19

3/20/2018 11:28:08 AM G:\Projects\2015\Division 7 (Hatch Mott)\17BP7R90 (Guilford 210) (105 33BBU 2BMR)\Structures\Drawings\Final(revised)\401_17BP7R90_SMUL_GD.dgn

DocuSign Envelope ID: 96A2AB8B-1CC7-460E-BC8D-E3B3DB7C39B9

3/20/2018 11:28:09 AM G:\Projects\2015\Division 7 (Hatch Mott)\17BP7R90 (Guilford 210)105 33BBU 2BMR)\Structures\Drawings\Final(revised)\401_17BP7R90_SMU_GD.dgn

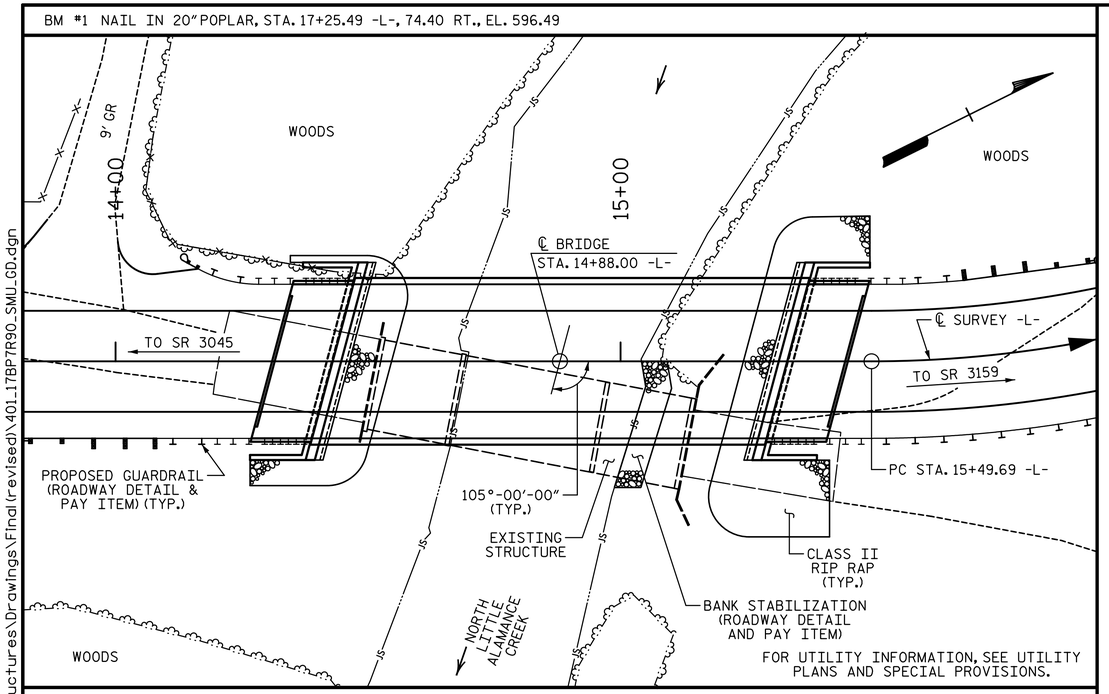

LOCATION SKETCH

NOTES:

ASSUMED LIVE LOAD = HL-93 OR ALTERNATE LOADING.

THIS BRIDGE HAS BEEN DESIGNED IN ACCORDANCE WITH THE AASHTO LRFD BRIDGE DESIGN SPECIFICATIONS.

THIS BRIDGE IS LOCATED IN SEISMIC ZONE 1.

FOR OTHER DESIGN DATA AND GENERAL NOTES, SEE SHEET SN.

FOR EROSION CONTROL MEASURES, SEE EROSION CONTROL PLANS.

REMOVAL OF THE EXISTING BRIDGE SHALL BE PERFORMED SO AS NOT TO ALLOW DEBRIS TO FALL INTO THE WATER. THE CONTRACTOR SHALL REMOVE THE BRIDGE AND SUBMIT PLANS FOR DEMOLITION IN ACCORDANCE WITH ARTICLE 402-2 OF THE STANDARD SPECIFICATIONS.

THE MATERIAL SHOWN IN THE CROSS-HATCHED AREA SHALL BE EXCAVATED FOR A DISTANCE OF 25 FT. LEFT AND 35 FT. RIGHT OF CENTERLINE ROADWAY AS DIRECTED BY THE ENGINEER. THIS WORK WILL BE PAID FOR AT THE CONTRACT LUMP SUM PRICE FOR UNCLASSIFIED STRUCTURE EXCAVATION. SEE SECTION 412 OF THE STANDARD SPECIFICATIONS.

THE EXISTING STRUCTURE CONSISTS OF 3 SPANS, 1 @ 18'-3", 1 @ 29'-0" AND 1 @ 17'-0". THE SUPERSTRUCTURE HAS A CLEAR ROADWAY WIDTH OF 15.92 FT. AND HAS A TIMBER DECK ON TIMBER JOINTS (SPANS 1 AND 3) AND STEEL I-BEAMS AND STEEL DOUBLE CHANNELS (SPAN 2). THE END BENTS ARE TIMBER CAPS, PILES AND SILLS. THE INTERIOR BENTS ARE TIMBER CAPS ON POSTS WITH TIMBER SILLS ON CONCRETE SILLS. THE EXISTING BRIDGE WHICH IS LOCATED AT THE SITE OF THE PROPOSED BRIDGE SHALL BE REMOVED EXCEPT AS NOTED. THE EXISTING BRIDGE IS PRESENTLY POSTED FOR LOAD LIMIT. SHOULD THE STRUCTURAL INTEGRITY OF THE BRIDGE DETERIORATE DURING CONSTRUCTION OF THE PROPOSED BRIDGE, THE LOAD LIMIT MAY BE REDUCED AS FOUND NECESSARY DURING THE LIFE OF THE PROJECT.

THE SUBSTRUCTURE OF THE EXISTING BRIDGE INDICATED ON THE PLANS IS FROM THE BEST INFORMATION AVAILABLE. SINCE THIS INFORMATION IS SHOWN FOR THE CONVENIENCE OF THE CONTRACTOR, THE CONTRACTOR SHALL HAVE NO CLAIM WHATSOEVER AGAINST THE DEPARTMENT OF TRANSPORTATION FOR ANY DELAYS OR ADDITIONAL COST INCURRED BASED ON DIFFERENCES BETWEEN THE EXISTING BRIDGE SUBSTRUCTURE SHOWN ON THE PLANS AND THE ACTUAL CONDITIONS AT THE PROJECT SITE.

THIS STRUCTURE HAS BEEN DESIGNED IN ACCORDANCE WITH "HEC 18-EVALUATING SCOUR AT BRIDGES."

FOR SUBMITTAL OF WORKING DRAWINGS, SEE SPECIAL PROVISIONS.

FOR FALSEWORK AND FORMWORK, SEE SPECIAL PROVISIONS.

FOR CRANE SAFETY, SEE SPECIAL PROVISIONS.

FOR GROUT FOR STRUCTURES, SEE SPECIAL PROVISIONS.

ASPHALT WEARING SURFACE IS INCLUDED IN ROADWAY QUANTITY ON ROADWAY PLANS.

INASMUCH AS THE PAINT SYSTEM ON THE EXISTING STRUCTURAL STEEL CONTAINS LEAD, THE CONTRACTOR'S ATTENTION IS DIRECTED TO ARTICLE 107-1 OF THE STANDARD SPECIFICATIONS. ANY COSTS RESULTING FROM COMPLIANCE WITH APPLICABLE STATE OR FEDERAL REGULATIONS PERTAINING TO HANDLING OF MATERIALS CONTAINING LEAD BASED PAINT SHALL BE INCLUDED IN THE BID PRICE FOR "REMOVAL OF EXISTING STRUCTURE AT STATION 14+88.00 -L-."

FOR ASBESTOS ASSESSMENT FOR BRIDGE DEMOLITION AND RENOVATION ACTIVITIES, SEE SPECIAL PROVISIONS.

TOTAL BILL OF MATERIAL

	REMOVAL OF EXISTING STRUCTURE	PILE EXCAVATION IN SOIL	PILE EXCAVATION NOT IN SOIL	UNCLASSIFIED STRUCTURE EXCAVATION	CLASS A CONCRETE	BRIDGE APPROACH SLABS	REINFORCING STEEL	PILE DRIVING EQUIPMENT SETUP FOR HP 12 X 53 STEEL PILES	HP 12 X 53 STEEL PILES		STEEL PILE POINTS	TWO BAR METAL RAIL	1'-2" X 2'-9½" CONCRETE PARAPET	RIP RAP CLASS II (2'-0" THICK)	GEOTEXTILE FOR DRAINAGE	ELASTOMERIC BEARINGS	3'-0" X 2'-9" PRESTRESSED CONCRETE BOX BEAMS		ASBESTOS ASSESSMENT
	LS	LF	LF	LS	CY	LS	LB	EA	NO.	LF	EA	LF	LF	TON	SY	LS	NO.	LF	LS
SUPERSTRUCTURE												164.38	180.0				11	990.00	
END BENT 1		52	32	LS	26.2		3,671	7	7	105				60	70				
END BENT 2				LS	26.2		3,671	7	7	140	7			125	140				
TOTAL	LS	52	32	LS	52.4	LS	7,342	14	14	245	7	164.38	180.0	185	210	LS	11	990.00	LS

FOUNDATION NOTES:

FOR PILES, SEE SECTION 450 OF THE STANDARD SPECIFICATIONS.

PILES AT END BENT NO. 1 ARE DESIGNED FOR A FACTORED RESISTANCE OF 105 TONS PER PILE.

DRIVE PILES AT END BENT NO. 1 TO A REQUIRED DRIVING RESISTANCE OF 175 TONS PER PILE.

DRILLED-IN PILES MAY BE REQUIRED FOR END BENT NO. 1. IF REQUIRED, EXCAVATE HOLES AT PILE LOCATIONS TO ELEVATION 575.5 FT. FOR PILE EXCAVATION, SEE SECTION 450 OF THE STANDARD SPECIFICATIONS.

CONCRETE OR GROUT IS REQUIRED TO FILL HOLES FOR PILE EXCAVATION AT END BENT NO. 1.

PILES AT END BENT NO. 2 ARE DESIGNED FOR A FACTORED RESISTANCE OF 105 TONS PER PILE.

DRIVE PILES AT END BENT NO. 2 TO A REQUIRED DRIVING RESISTANCE OF 175 TONS PER PILE.

STEEL H-PILE POINTS ARE REQUIRED FOR STEEL H-PILES AT END BENT NO. 2. FOR STEEL PILE POINTS, SEE SECTION 450 OF THE STANDARD SPECIFICATIONS.

IF BRACED PILES AT END BENT NO. 1 ARE REQUIRED TO BE DRILLED-IN, INSTALL THOSE PILES VERTICALLY.

PROJECT NO. 17BP.7.R.90
GUILFORD COUNTY
STATION: 14+88.00 -L-

SHEET 2 OF 2

STATE OF NORTH CAROLINA
DEPARTMENT OF TRANSPORTATION
RALEIGH

GENERAL DRAWING
FOR BRIDGE ON SR 3124
(STEWART MILL RD.) OVER
NORTH LITTLE ALAMANCE CREEK
BETWEEN SR 3045 AND SR 3159
30'-6" CLEAR ROADWAY - 105° SKEW

PLANS PREPARED BY:

SIMPSON ENGINEERS & ASSOCIATES
5640 Dillard Drive
Suite 200
Cary, NC 27518
(919) 852-0468
(919) 852-0598 (Fax)
www.simpsonengr.com
LICENSURE NO. C-2521

NORTH CAROLINA PROFESSIONAL SEAL 11268 ENGINEER BETSY S. COX
3/20/2018

DOCUMENT NOT CONSIDERED FINAL UNLESS ALL SIGNATURES COMPLETED

REVISIONS						SHEET NO.
NO.	BY:	DATE:	NO.	BY:	DATE:	S-2
1			3			TOTAL SHEETS
2			4			19

DRAWN BY: T. BANKOVICH DATE: 3-18
CHECKED BY: B.S. COX DATE: 3-18
DESIGN ENGINEER OF RECORD: B.S. COX DATE: 3-18

DocuSign Envelope ID: 96A2AB8B-1CC7-460E-BC8D-E3B3DB7C39B9

3/20/2018 11:28:09 AM G:\Projects\2015\Division 7 (Hatch Mott)\17BP7R90 (Guilford 210)(105 33BBU 2BMR)\Structures\Drawings\Final(revised)\401_17BP7R90_SMULLRFR.dgn

LOAD AND RESISTANCE FACTOR RATING (LRFD) SUMMARY FOR PRESTRESSED CONCRETE GIRDERS

LEVEL		VEHICLE	WEIGHT (W) (TONS)	CONTROLLING LOAD RATING	MINIMUM RATING FACTORS (RF)	TONS = W X RF	STRENGTH I LIMIT STATE											SERVICE III LIMIT STATE						COMMENT NUMBER
								MOMENT					SHEAR						MOMENT					
							LIVELOAD FACTORS	DISTRIBUTION FACTORS (DF)	RATING FACTOR	SPAN	GIRDER LOCATION	DISTANCE FROM LEFT END OF SPAN (ft)	DISTRIBUTION FACTORS (DF)	RATING FACTOR	SPAN	GIRDER LOCATION	DISTANCE FROM LEFT END OF SPAN (ft)	LIVELOAD FACTORS	DISTRIBUTION FACTORS (DF)	RATING FACTOR	SPAN	GIRDER LOCATION	DISTANCE FROM LEFT END OF SPAN (ft)	
DESIGN LOAD RATING		HL-93(Inv)	N/A	1	1.126	--	1.75	0.267	1.49	A	EL	44.224	0.584	1.15	A	EL	8.845	0.80	0.267	**1.13**	A	EL	**44.224**	
		HL-93(Opr)	N/A	--	1.488	--	1.35	0.267	1.94	A	EL	44.224	0.584	1.49	A	EL	8.845	N/A	--	--	--	--	--	
		HS-20(Inv)	36.000	2	1.491	53.666	1.75	0.267	2.03	A	EL	44.224	0.584	**1.49**	A	EL	**8.845**	0.80	0.267	1.53	A	EL	44.224	
		HS-20(Opr)	36.000	--	1.932	69.567	1.35	0.267	2.63	A	EL	44.224	0.584	1.93	A	EL	8.845	N/A	--	--	--	--	--	
LEGAL LOAD RATING	SV	SNSH	13.500	--	3.573	48.237	1.4	0.267	5.92	A	EL	44.224	0.584	4.53	A	EL	8.845	0.80	0.267	3.57	A	EL	44.224	
		SNGARBS2	20.000	--	2.611	52.229	1.4	0.267	4.33	A	EL	44.224	0.584	3.19	A	EL	8.845	0.80	0.267	2.61	A	EL	44.224	
		SNAGRIS2	22.000	--	2.452	53.948	1.4	0.267	4.07	A	EL	44.224	0.584	2.95	A	EL	8.845	0.80	0.267	2.45	A	EL	44.224	
		SNCOTTS3	27.250	--	1.777	48.412	1.4	0.267	2.95	A	EL	44.224	0.584	2.26	A	EL	8.845	0.80	0.267	1.78	A	EL	44.224	
		SNAGGRS4	34.925	--	1.465	51.163	1.4	0.267	2.43	A	EL	44.224	0.584	1.85	A	EL	8.845	0.80	0.267	1.46	A	EL	44.224	
		SNS5A	35.550	--	1.434	50.974	1.4	0.267	2.38	A	EL	44.224	0.584	1.87	A	EL	8.845	0.80	0.267	1.43	A	EL	44.224	
		SNS6A	39.950	--	1.307	52.234	1.4	0.267	2.17	A	EL	44.224	0.584	1.69	A	EL	8.845	0.80	0.267	1.31	A	EL	44.224	
		SNS7B	42.000	--	1.245	52.283	1.4	0.267	2.06	A	EL	44.224	0.584	1.65	A	EL	8.845	0.80	0.267	1.24	A	EL	44.224	
	TTST	TNAGRIT3	33.000	--	1.592	52.537	1.4	0.267	2.64	A	EL	44.224	0.584	2.02	A	EL	8.845	0.80	0.267	1.59	A	EL	44.224	
		TNT4A	33.075	--	1.597	52.815	1.4	0.267	2.65	A	EL	44.224	0.584	1.98	A	EL	8.845	0.80	0.267	1.60	A	EL	44.224	
		TNT6A	41.600	--	1.298	53.997	1.4	0.267	2.15	A	EL	44.224	0.584	1.74	A	EL	8.845	0.80	0.267	1.30	A	EL	44.224	
		TNT7A	42.000	--	1.3	54.619	1.4	0.267	2.16	A	EL	44.224	0.584	1.71	A	EL	8.845	0.80	0.267	1.30	A	EL	44.224	
		TNT7B	42.000	--	1.335	56.09	1.4	0.267	2.21	A	EL	44.224	0.584	1.62	A	EL	8.845	0.80	0.267	1.34	A	EL	44.224	
		TNAGRIT4	43.000	--	1.278	54.943	1.4	0.267	2.12	A	EL	44.224	0.584	1.57	A	EL	8.845	0.80	0.267	1.28	A	EL	44.224	
		TNAGT5A	45.000	--	1.208	54.37	1.4	0.267	2	A	EL	44.224	0.584	1.55	A	EL	8.845	0.80	0.267	1.21	A	EL	44.224	
		TNAGT5B	45.000	3	1.197	53.852	1.4	0.267	1.98	A	EL	44.224	0.584	1.5	A	EL	8.845	0.80	0.267	**1.20**	A	EL	**44.224**	

LOAD FACTORS:

	LIMIT STATE	γ_{DC}	γ_{DW}
DESIGN LOAD RATING FACTORS	STRENGTH I	1.25	1.50
	SERVICE III	1.00	1.00

NOTES:

MINIMUM RATING FACTORS ARE BASED ON THE STRENGTH I AND SERVICE III LIMIT STATES.

ALLOWABLE STRESSES FOR SERVICE III LIMIT STATE ARE AS REQUIRED FOR DESIGN.

DISTANCE FROM LEFT END OF SPAN IS MEASURED FROM ℄ BEARING.

(#) CONTROLLING LOAD RATING

(1) DESIGN LOAD RATING (HL-93)

(2) DESIGN LOAD RATING (HS-20)

(3) LEGAL LOAD RATING **

** SEE CHART FOR VEHICLE TYPE

GIRDER LOCATION

I - INTERIOR GIRDER
EL - EXTERIOR LEFT GIRDER
ER - EXTERIOR RIGHT GIRDER

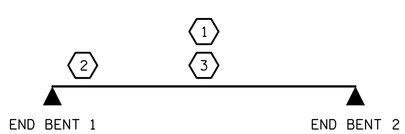

LRFR SUMMARY
SPAN A

PROJECT NO. 17BP.7.R.90
GUILFORD COUNTY
STATION: 14+88.00 -L-

STATE OF NORTH CAROLINA
DEPARTMENT OF TRANSPORTATION
RALEIGH

LRFR SUMMARY FOR 90'-0" BOX BEAM UNIT 105° SKEW
(NON-INTERSTATE TRAFFIC)

PLANS PREPARED BY:
SIMPSON ENGINEERS & ASSOCIATES
5640 Dillard Drive
Suite 200
Cary, NC 27518
(919) 852-0468
(919) 852-0598 (Fax)
www.simpsonengr.com
LICENSURE NO. C-2521

NORTH CAROLINA PROFESSIONAL SEAL 11268 ENGINEER BETSY S. COX
3/20/2018

DOCUMENT NOT CONSIDERED FINAL UNLESS ALL SIGNATURES COMPLETED

REVISIONS						SHEET NO.
NO.	BY:	DATE:	NO.	BY:	DATE:	S-3
1			3			TOTAL SHEETS
2			4			19

DRAWN BY: T. BANKOVICH DATE: 3-18
CHECKED BY: B.S. COX DATE: 3-18
DESIGN ENGINEER OF RECORD: B.S. COX DATE: 3-18

DocuSign Envelope ID: 96A2AB8B-1CC7-460E-BC8D-E3B3DB7C39B9

3/20/2018 11:28:10 AM G:\Projects\2015\Division 7 (Hatch Mott)\17BP7R90 (Guilford 210)(105 33BBU 2BMR)\Structures\Drawings\Final(revised)\401_17BP7R90_SMU_SUP.dgn

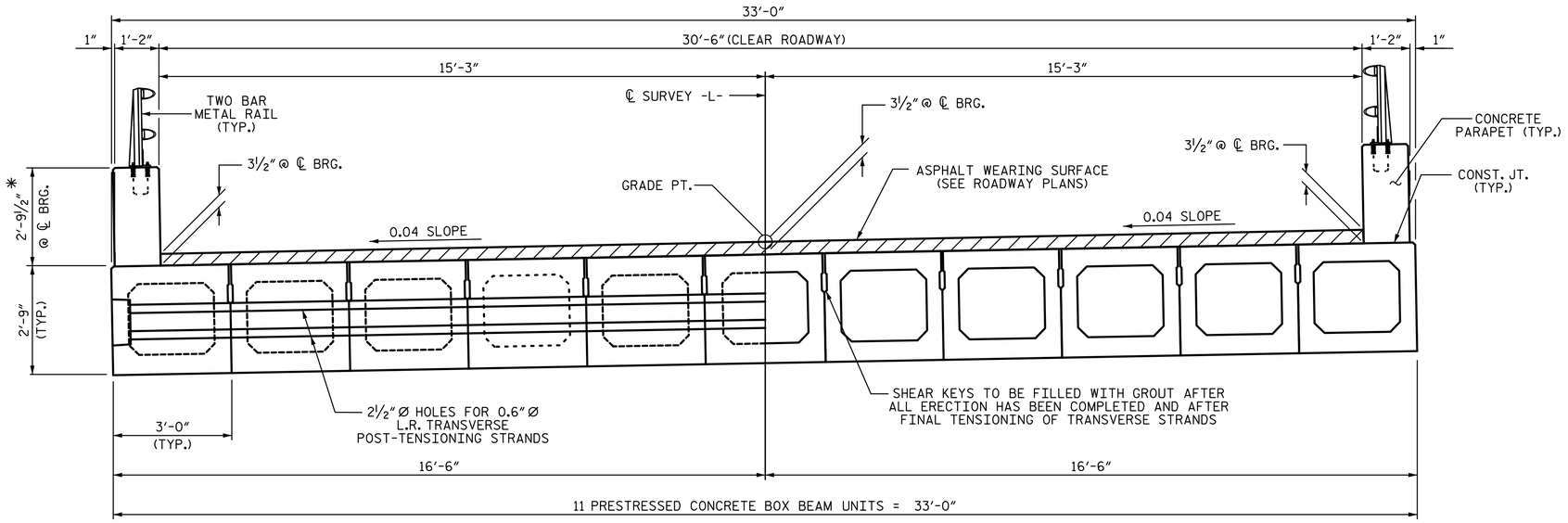

HALF SECTION
(AT INTERMEDIATE DIAPHRAGMS)

HALF SECTION
(THROUGH VOIDS)

TYPICAL SECTION

*- THE MAXIMUM CONCRETE PARAPET HEIGHTS AND ASPHALT THICKNESS ARE SHOWN. THE HEIGHT OF THE CONCRETE PARAPET AND ASPHALT THICKNESS VARIES WHILE THE TOP OF THE CONCRETE PARAPET FOLLOWS THE PROFILE OF THE GUTTERLINE. SEE THE "CONCRETE PARAPET DETAILS" SHEET.

FIXED END

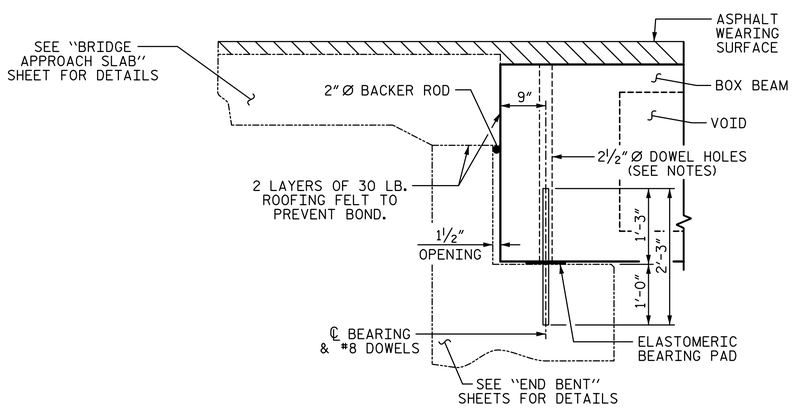

SECTION AT END BENT

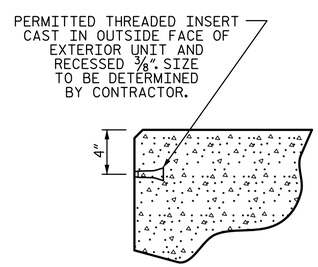

THREADED INSERT DETAIL

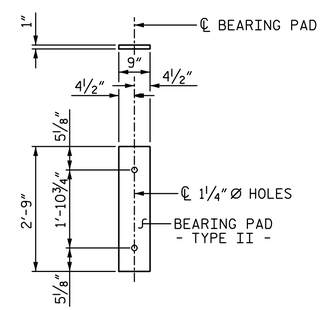

FIXED END
(TYPE II - 22 REQ'D)

ELASTOMERIC BEARING DETAILS

ELASTOMER IN ALL BEARINGS SHALL BE 60 DUROMETER HARDNESS.

NOTES:

ALL PRESTRESSING STRANDS SHALL BE 7-WIRE LOW RELAXATION GRADE 270 STRANDS AND SHALL CONFORM TO AASHTO M203 EXCEPT FOR SAMPLING REQUIREMENTS WHICH SHALL BE IN ACCORDANCE WITH THE STANDARD SPECIFICATIONS.

ALL REINFORCING STEEL CAST WITH THE BOX BEAM SECTIONS SHALL BE GRADE 60 AND SHALL BE INCLUDED IN THE UNIT PRICE BID FOR PRESTRESSED CONCRETE BOX BEAMS.

FLAME CUTTING OF THE TRANSVERSE POST-TENSIONING STRAND IS NOT ALLOWED.

RECESSES FOR TRANSVERSE STRANDS SHALL BE GROUTED AFTER THE TENSIONING OF THE STRANDS.

THE 2½" Ø DOWEL HOLES AT FIXED ENDS OF BOX BEAM SECTIONS SHALL BE FILLED WITH NON-SHRINK GROUT.

THE BACKER RODS SHALL CONFORM TO THE REQUIREMENTS OF TYPE M BOND BREAKER. SEE SECTION 1028 OF THE STANDARD SPECIFICATIONS.

THE TRANSFER OF LOAD FROM THE ANCHORAGES TO THE BOX BEAM UNIT SHALL BE DONE WHEN THE CONCRETE HAS REACHED A COMPRESSIVE STRENGTH OF NOT LESS THAN 6000 PSI.

ALL REINFORCING STEEL IN CONCRETE PARAPETS SHALL BE EPOXY COATED.

PRESTRESSING STRANDS SHALL BE CUT FLUSH WITH THE BOX BEAM UNIT ENDS.

APPLY EPOXY PROTECTIVE COATING TO BOX BEAM UNIT ENDS.

VERTICAL GROOVED CONTRACTION JOINTS, ½" IN DEPTH, SHALL BE TOOLED IN ALL EXPOSED FACES OF THE CONCRETE PARAPET AND IN ACCORDANCE WITH ARTICLE 825-10(B) OF THE STANDARD SPECIFICATIONS. A VERTICAL CONTRACTION JOINT SHALL BE LOCATED AT EACH THIRD POINT BETWEEN PARAPET EXPANSION JOINTS. ONLY ONE CONTRACTION JOINT IS REQUIRED AT MIDPOINT OF PARAPET SEGMENTS LESS THAN 20 FEET IN LENGTH AND NO CONTRACTION JOINTS ARE REQUIRED FOR THOSE SEGMENTS LESS THAN 10 FEET IN LENGTH.

THE LOCATION OF THE VOID DRAINS MAY BE SHIFTED SLIGHTLY WHERE NECESSARY TO CLEAR PRESTRESSING STRANDS OR TRANSVERSE REINFORCING STEEL.

FOR GROUT FOR STRUCTURES, SEE SPECIAL PROVISIONS.

THE PERMITTED THREADED INSERTS ARE DETAILED AS AN OPTION FOR THE CONTRACTOR TO ATTACH FALSEWORK AND FORMWORK DURING CONSTRUCTION.

THE PERMITTED THREADED INSERTS IN THE EXTERIOR UNITS SHALL BE SIZED BY THE CONTRACTOR, SPACED AT 4'-0" CENTERS AND GALVANIZED IN ACCORDANCE WITH SECTION 1076 OF THE STANDARD SPECIFICATIONS. STAINLESS STEEL THREADED INSERTS MAY BE USED AS AN ALTERNATE.

THE PERMITTED THREADED INSERTS SHALL BE GROUTED BY THE CONTRACTOR IMMEDIATELY FOLLOWING REMOVAL OF THE FALSEWORK.

THE COST OF THE PERMITTED THREADED INSERTS SHALL BE INCLUDED IN THE PRICE BID FOR THE PRECAST UNITS.

PROJECT NO. 17BP.7.R.90
GUILFORD COUNTY
STATION: 14+88.00 -L-

SHEET 1 OF 4

DRAWN BY: T. BANKOVICH DATE: 3-18
CHECKED BY: B.S. COX DATE: 3-18
DESIGN ENGINEER OF RECORD: B.S. COX DATE: 3-18

PLANS PREPARED BY:
SIMPSON ENGINEERS & ASSOCIATES
5640 Dillard Drive
Suite 200
Cary, NC 27518
(919) 852-0468
(919) 852-0598 (Fax)
www.simpsonengr.com
LICENSURE NO. C-2521

NORTH CAROLINA PROFESSIONAL SEAL 11268 ENGINEER BETSY S. COX
3/20/2018

DOCUMENT NOT CONSIDERED FINAL UNLESS ALL SIGNATURES COMPLETED

STATE OF NORTH CAROLINA
DEPARTMENT OF TRANSPORTATION
RALEIGH

SUPERSTRUCTURE
3'-0" X 2'-9"
PRESTRESSED CONCRETE BOX BEAM UNIT
105° SKEW

REVISIONS						SHEET NO.
NO.	BY:	DATE:	NO.	BY:	DATE:	S-4
1			3			TOTAL SHEETS
2			4			19

DocuSign Envelope ID: 96A2AB8B-1CC7-460E-BC8D-E3B3DB7C39B9

3/20/2018 11:28:10 AM G:\Projects\2015\Division 7 (Hatch Mott)\17BP7R90 (Guilford 210)(105 33BBU 2BMR)\Structures\Drawings\Final(revised)\401_17BP7R90_SMU_SUP.dgn

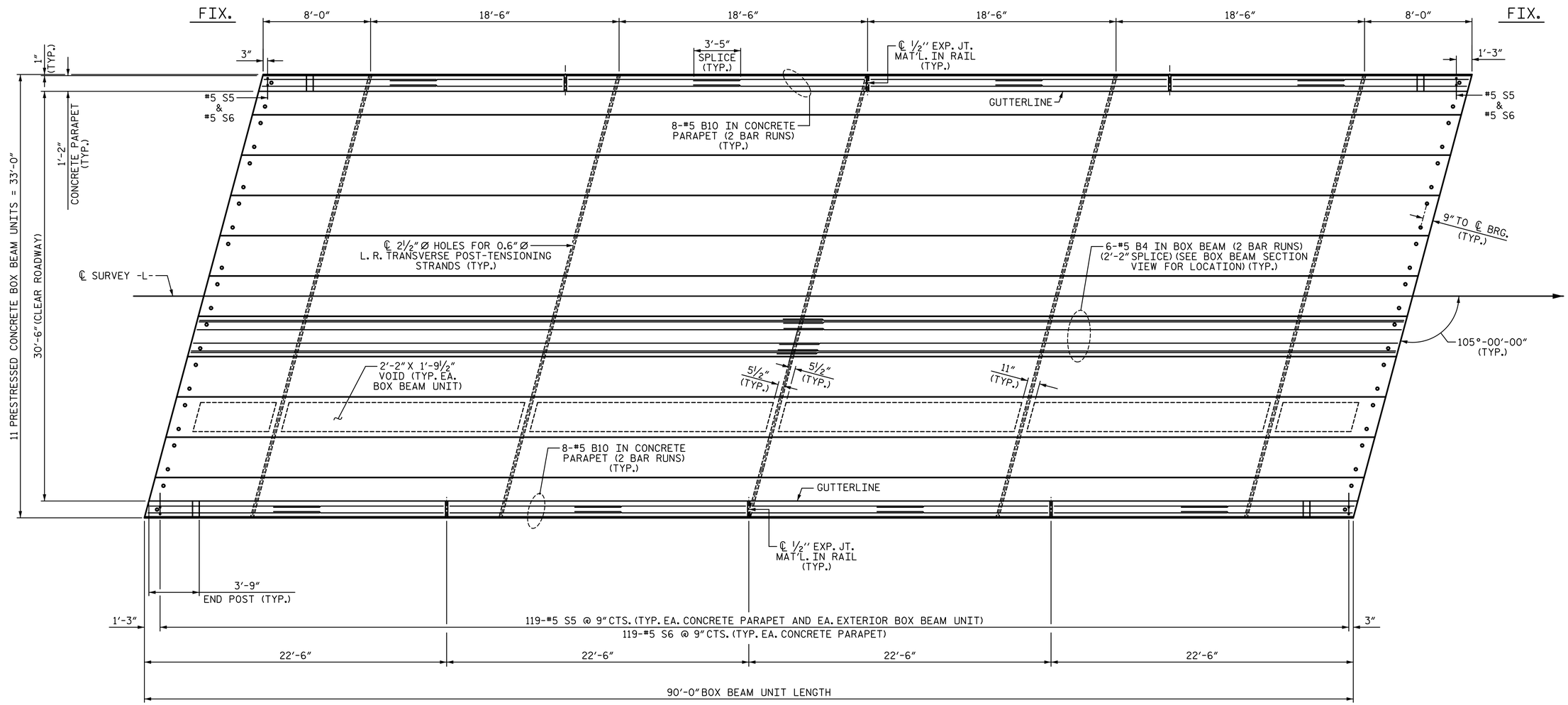

PLAN OF SPAN A

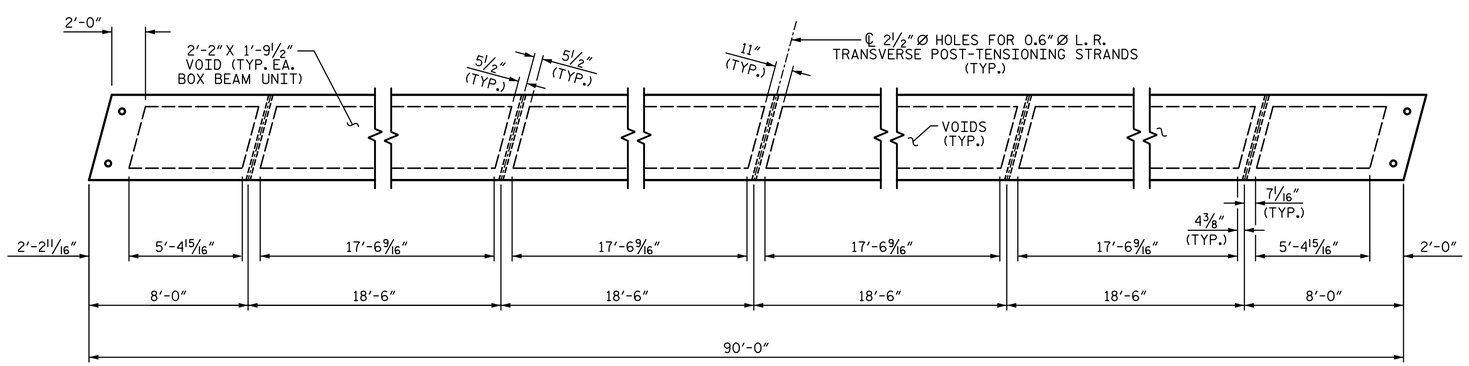

DIAPHRAGM AND VOID LAYOUT

PROJECT NO. 17BP.7.R.90

GUILFORD COUNTY

STATION: 14+88.00 -L-

SHEET 2 OF 4

STATE OF NORTH CAROLINA
DEPARTMENT OF TRANSPORTATION
RALEIGH

SUPERSTRUCTURE

PLAN OF SPAN A (90'-0" UNIT) 30'-6" CLEAR ROADWAY

105° SKEW

PLANS PREPARED BY:

SIMPSON ENGINEERS & ASSOCIATES
5640 Dillard Drive
Suite 200
Cary, NC 27518
(919) 852-0468
(919) 852-0598 (Fax)
www.simpsonengr.com
LICENSURE NO. C-2521

NORTH CAROLINA PROFESSIONAL SEAL 11268 ENGINEER BETSY S. COX
3/20/2018

DOCUMENT NOT CONSIDERED FINAL UNLESS ALL SIGNATURES COMPLETED

REVISIONS						
NO.	BY:	DATE:	NO.	BY:	DATE:	
1			3			
2			4			

SHEET NO. S-5

TOTAL SHEETS 19

DRAWN BY: T. BANKOVICH DATE: 3-18
CHECKED BY: B.S. COX DATE: 3-18
DESIGN ENGINEER OF RECORD: B.S. COX DATE: 3-18

DocuSign Envelope ID: 96A2AB8B-1CC7-460E-BC8D-E3B3DB7C39B9

3/20/2018 11:28:10 AM G:\Projects\2015\Division 7 (Hatch Mott)\17BP7R90 (Guilford 210) (105 33BBU 2BMR)\Structures\Drawings\Final(revised)\401_17BP7R90_SMU_SUP.dgn

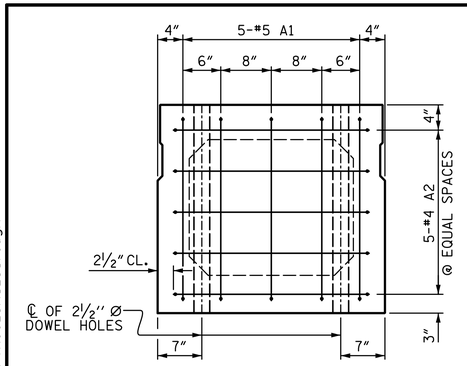

END ELEVATION

SHOWING PLACEMENT OF #5 & #4 "A" BARS AND LOCATION OF DOWEL HOLES. (INTERIOR BOX BEAM SECTION SHOWN-EXTERIOR SECTION SIMILAR EXCEPT SHEAR KEY LOCATION. STRAND LAYOUT NOT SHOWN.)

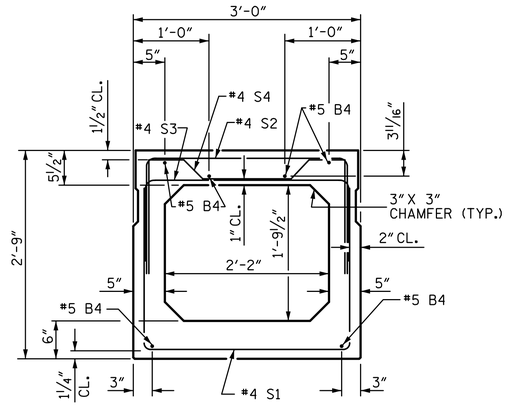

INTERIOR BOX BEAM SECTION

(STRAND LAYOUT NOT SHOWN)

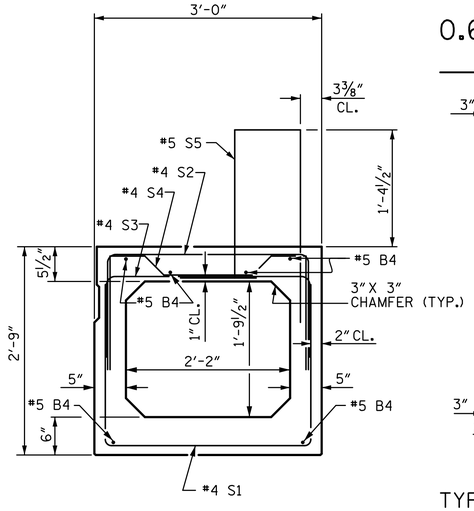

EXTERIOR BOX BEAM SECTION

(STRAND LAYOUT NOT SHOWN)

0.6" Ø LOW RELAXATION STRAND LAYOUT

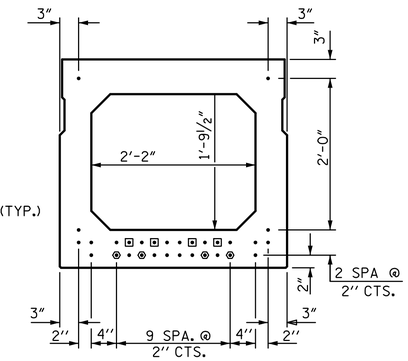

TYPICAL STRAND LOCATION

(30 STRANDS REQUIRED)

DEBONDING LEGEND

- ● FULLY BONDED STRAND
- ◉ STRAND DEBONDED FOR 4'-0" FROM END OF GIRDER
- ◉ STRAND DEBONDED FOR 12'-0" FROM END OF GIRDER

BOND SHALL BE BROKEN ON STRANDS AS SHOWN FOR THE SPECIFIC LENGTH FROM EACH END OF THE BOX BEAM. SEE STANDARD SPECIFICATIONS ARTICLE 1078-7.

BAR TYPES

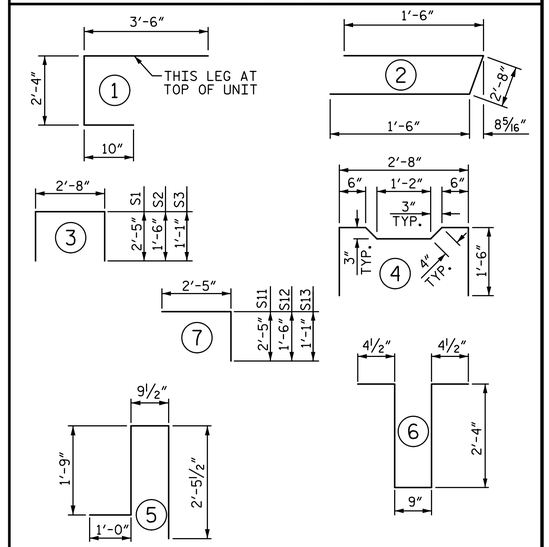

ALL BAR DIMENSIONS ARE OUT TO OUT

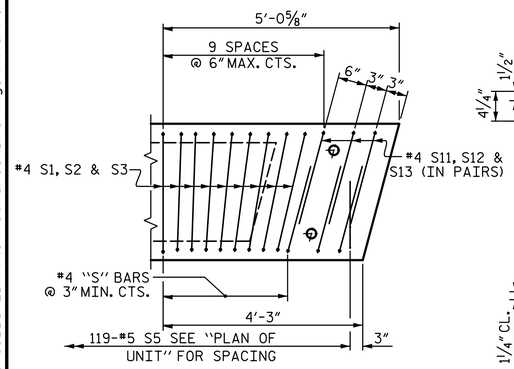

DETAIL "B"

EXTERIOR UNIT SHOWN, INTERIOR UNIT SIMILAR EXCEPT OMIT #5 S5 BARS. "B" BARS AND "A" BARS NOT SHOWN.

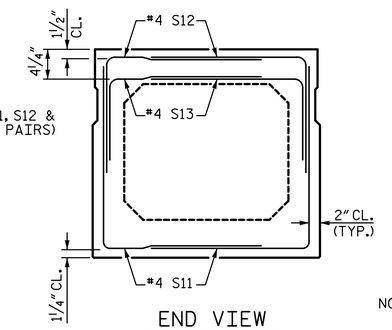

END VIEW

(SHOWING #4 "S" BARS IN END OF BEAM)

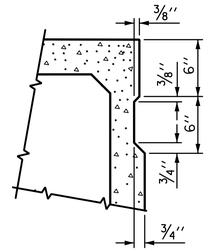

SHEAR KEY DETAIL

NOTE: OMIT SHEAR KEY ON OUTSIDE FACE OF EXTERIOR BOX BEAMS.

GRADE 270 STRANDS	
	0.6" Ø L.R.
AREA (SQUARE INCHES)	0.217
ULTIMATE STRENGTH (LBS. PER STRAND)	58,600
APPLIED PRESTRESS (LBS. PER STRAND)	43,950

BILL OF MATERIAL FOR ONE BOX BEAM SECTION

				EXTERIOR UNIT		INTERIOR UNIT	
BAR	NUMBER	SIZE	TYPE	LENGTH	WEIGHT	LENGTH	WEIGHT
A1	10	#5	1	6'-8"	70	6'-8"	70
A2	40	#4	2	5'-8"	151	5'-8"	151
B4	12	#5	STR	45'-11"	575	45'-11"	575
K1	15	#4	6	6'-2"	62	6'-2"	62
K2	10	#4	STR	2'-7"	17	2'-7"	17
S1	72	#4	3	7'-6"	361	7'-6"	361
S2	72	#4	3	5'-8"	273	5'-8"	273
S3	125	#4	3	4'-10"	404	4'-10"	404
S4	53	#4	4	5'-10"	207	5'-10"	207
S11	12	#4	7	4'-10"	39	4'-10"	39
S12	12	#4	7	3'-11"	31	3'-11"	31
S13	12	#4	7	3'-6"	28	3'-6"	28
✳ S5	119	#5	5	6'-0"	745		
REINFORCING STEEL				2218	LBS.	2218	LBS.
✳ EPOXY COATED REINF. STEEL				745	LBS.		
8000 P.S.I. CONCRETE				16.0	CU. YDS.	15.9	CU. YDS.
0.6" Ø L.R. STRANDS				No. 30		No. 30	

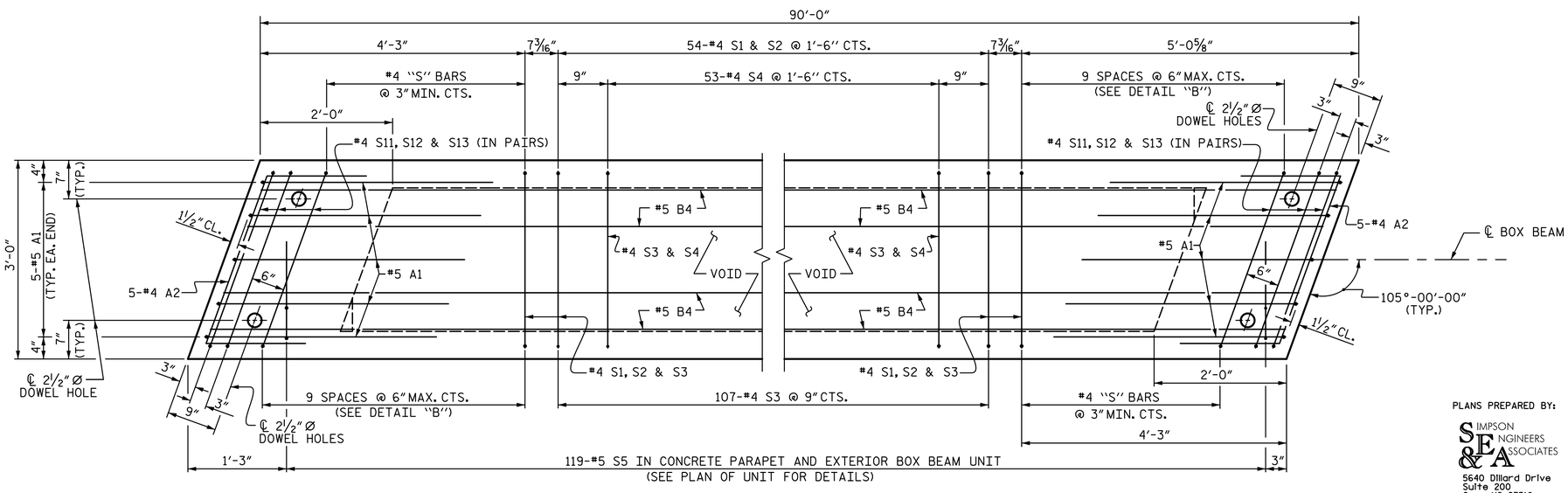

PLAN OF BOX BEAM

EXTERIOR UNIT SHOWN, INTERIOR UNIT SIMILAR EXCEPT OMIT #5 S5 BARS.
FOR LOCATION OF DIAPHRAGMS, SEE "PLAN OF UNIT".
FOR THREADED INSERTS, SEE "THREADED INSERT DETAIL".
FOR REINFORCING STEEL IN DIAPHRAGMS, SEE "DOUBLE DIAPHRAGM DETAILS".

PROJECT NO. 17BP.7.R.90
GUILFORD COUNTY
STATION: 14+88.00 -L-

SHEET 3 OF 4

STATE OF NORTH CAROLINA
DEPARTMENT OF TRANSPORTATION
RALEIGH

SUPERSTRUCTURE

3'-0" X 2'-9"
PRESTRESSED CONCRETE
BOX BEAM UNIT

105° SKEW

PLANS PREPARED BY:
SIMPSON ENGINEERS & ASSOCIATES
5640 Dillard Drive
Suite 200
Cary, NC 27518
(919) 852-0468
(919) 852-0598 (Fax)
www.simpsonengr.com
LICENSURE NO. C-2521

NORTH CAROLINA PROFESSIONAL SEAL 11268 ENGINEER BETSY S. COX
3/20/2018

DOCUMENT NOT CONSIDERED FINAL UNLESS ALL SIGNATURES COMPLETED

REVISIONS							
NO.	BY:	DATE:	NO.	BY:	DATE:	SHEET NO.	
1			3			S-6	
2			4			TOTAL SHEETS	
						19	

DRAWN BY: T. BANKOVICH DATE: 3-18
CHECKED BY: B.S. COX DATE: 3-18
DESIGN ENGINEER OF RECORD: B.S. COX DATE: 3-18

DocuSign Envelope ID: 96A2AB8B-1CC7-460E-BC8D-E3B3DB7C39B9

3/20/2018 11:28:10 AM G:\Projects\2015\Division 7 (Hatch Mott)\17BP7R90 (Guilford 210) (105 33BBU 2BMR)\Structures\Drawings\Final(revised)\401_17BP7R90_SMU_SUP.dgn

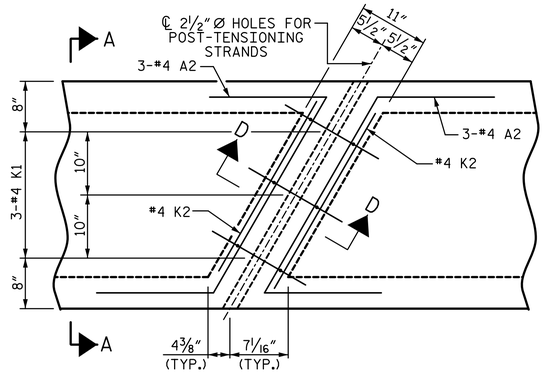

PLAN

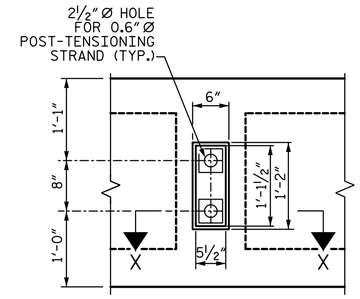

VIEW Y-Y

SHOWING ELEVATION VIEW OF GROUTED RECESS

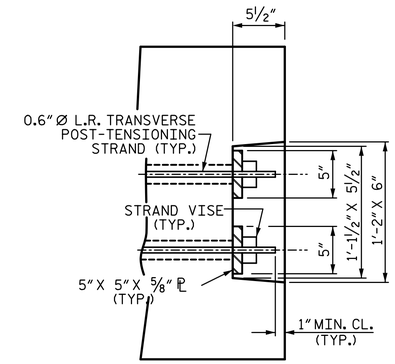

DETAIL "C"

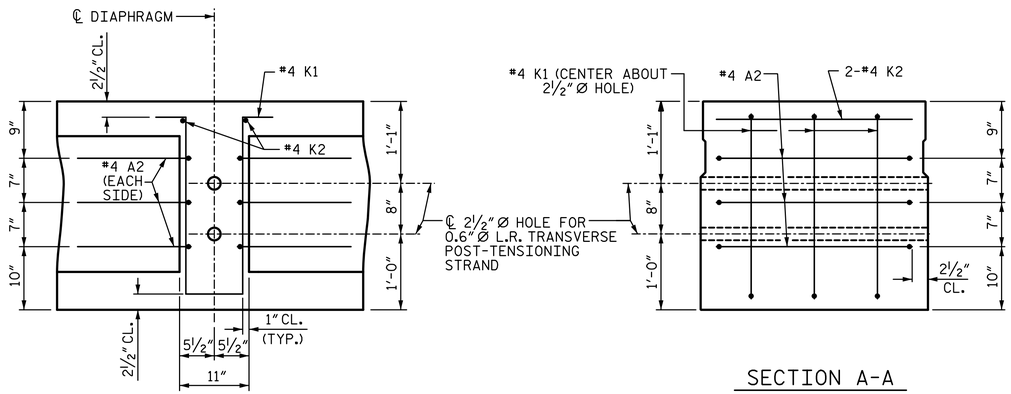

SECTION D-D

SECTION A-A

VOIDS NOT SHOWN

DOUBLE DIAPHRAGM DETAILS

#4 "S" BARS NOT SHOWN. #4 "S" BARS MAY BE SHIFTED SLIGHTLY TO CLEAR 2½" Ø HOLE.

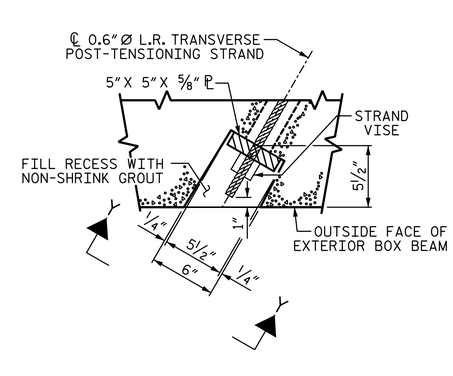

PART SECTION AT RECESS

SECTION X-X

SHOWING PLAN VIEW OF GROUTED RECESS

GROUTED RECESS DETAIL AT END OF POST-TENSIONED STRANDS OF EXTERIOR BOX BEAM

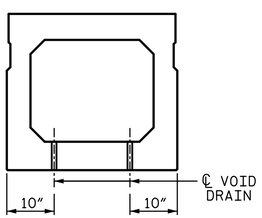

SECTION B-B

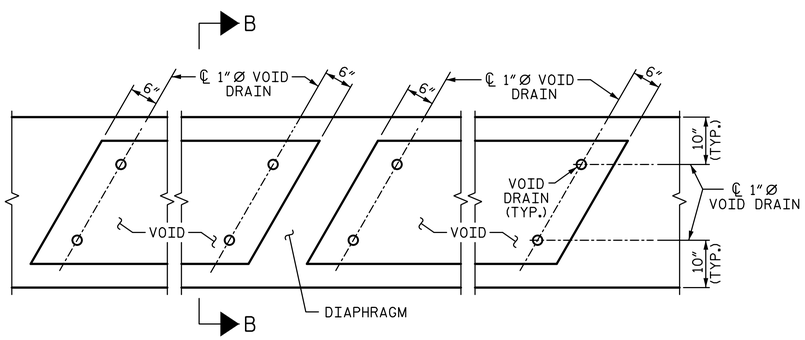

PART PLAN

VOID DRAIN DETAILS

(DIMENSIONS SHOWN ARE TYPICAL FOR EACH VOID)

DEAD LOAD DEFLECTION AND CAMBER	
	3'-0" x 2'-9"
90' BOX BEAM UNIT	0.6" Ø L.R. STRAND
CAMBER (SLAB ALONE IN PLACE)	2¾" ↑
DEFLECTION DUE TO SUPERIMPOSED DEAD LOAD**	¾" ↑
FINAL CAMBER	2" ↑

** INCLUDES FUTURE WEARING SURFACE

BOX BEAM UNITS REQUIRED			
	NUMBER	LENGTH	TOTAL LENGTH
EXTERIOR B.B.	2	90'-0"	180'-0"
INTERIOR B.B.	9	90'-0"	810'-0"
TOTAL	11	———	990'-0"

PROJECT NO. 17BP.7.R.90

GUILFORD COUNTY

STATION: 14+88.00 -L-

SHEET 4 OF 4

STATE OF NORTH CAROLINA
DEPARTMENT OF TRANSPORTATION
RALEIGH

SUPERSTRUCTURE

3'-0" X 2'-9"
PRESTRESSED CONCRETE
BOX BEAM UNIT

105° SKEW

PLANS PREPARED BY:

SIMPSON ENGINEERS & ASSOCIATES
5640 Dillard Drive
Suite 200
Cary, NC 27518
(919) 852-0468
(919) 852-0598 (Fax)
www.simpsonengr.com
LICENSURE NO. C-2521

NORTH CAROLINA PROFESSIONAL SEAL 11268 ENGINEER BETSY S. COX
3/20/2018

DOCUMENT NOT CONSIDERED FINAL UNLESS ALL SIGNATURES COMPLETED

REVISIONS						
NO.	BY:	DATE:	NO.	BY:	DATE:	
1			3			
2			4			

SHEET NO. S-7

TOTAL SHEETS 19

DRAWN BY: T. BANKOVICH DATE: 3-18
CHECKED BY: B.S. COX DATE: 3-18
DESIGN ENGINEER OF RECORD: B.S. COX DATE: 3-18

DocuSign Envelope ID: 96A2AB8B-1CC7-460E-BC8D-E3B3DB7C39B9

3/20/2018 11:28:11 AM G:\Projects\2015\Division 7 (Hatch Mott)\17BP7R90 (Guilford 210)(105 33BBU 2BMR)\Structures\Drawings\Final(revised)\401_17BP7R90_SMU_SUP.dgn

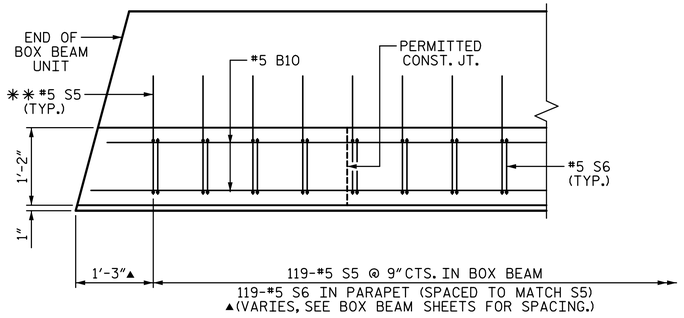

PLAN OF PARAPET

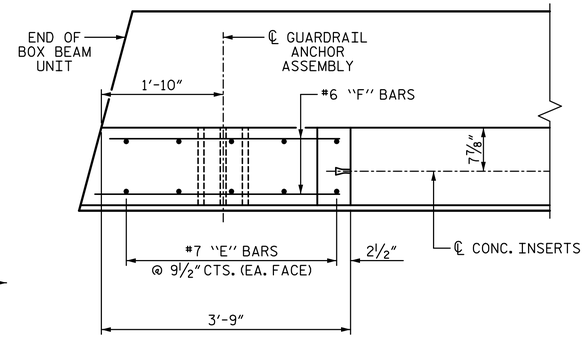

PLAN OF END POST

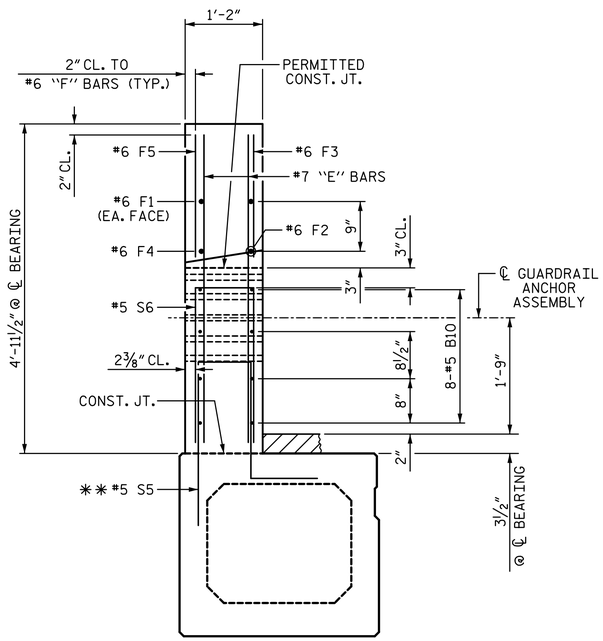

END VIEW

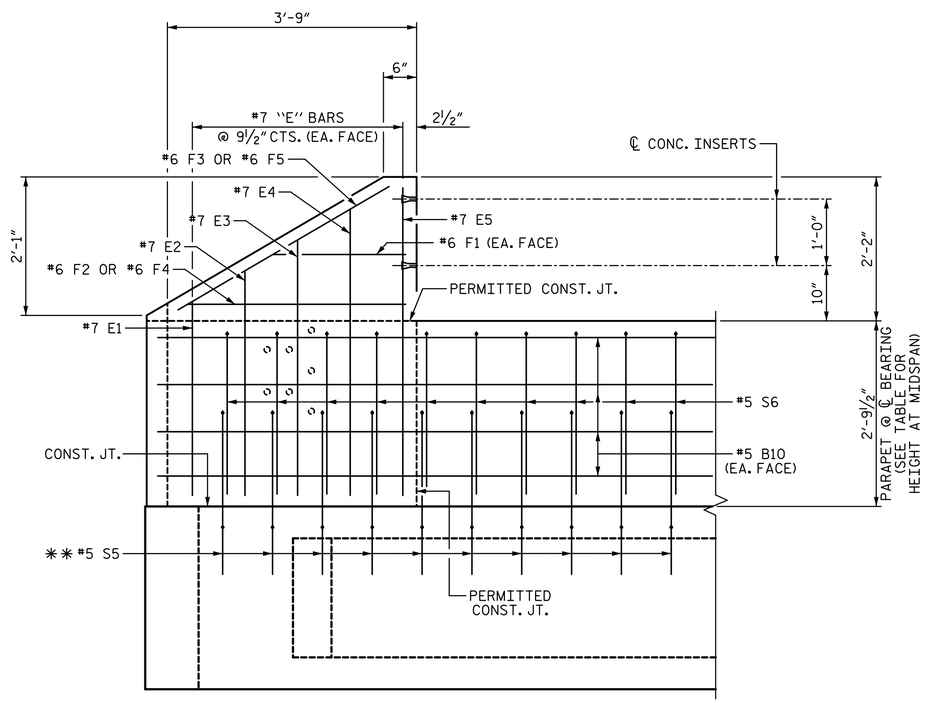

ELEVATION

PARAPET AND END POST FOR TWO BAR RAIL

✱✱#5 S5 BARS ARE INCLUDED IN BILL OF MATERIAL FOR BOX BEAM

GUTTERLINE ASPHALT THICKNESS & PARAPET HEIGHT		
	ASPHALT OVERLAY THICKNESS @ MID-SPAN	PARAPET HEIGHT @ MID-SPAN
90' UNITS	1½"	2'-7½"

BAR TYPES

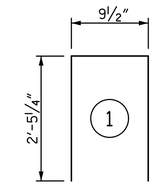

BILL OF MATERIAL

PARAPET AND END POSTS

BAR	NO.	SIZE	TYPE	LENGTH	WEIGHT
✱B10	128	#5	STR	12'-9"	1702
✱E1	8	#7	STR	2'-11"	48
✱E2	8	#7	STR	3'-4"	55
✱E3	8	#7	STR	3'-10"	63
✱E4	8	#7	STR	4'-4"	71
✱E5	8	#7	STR	4'-9"	78
✱F1	8	#6	STR	1'-11"	23
✱F2	4	#6	STR	3'-1"	19
✱F3	4	#6	STR	3'-7"	22
✱F4	4	#6	STR	3'-4"	20
✱F5	4	#6	STR	3'-11"	24
✱S6	238	#5	1	5'-8"	1407

✱EPOXY COATED REINFORCING STEEL 3532 LB

CLASS AA CONCRETE 21.9 CY

1'-2" X 2'-9½" CONCRETE PARAPET 180.0 LF

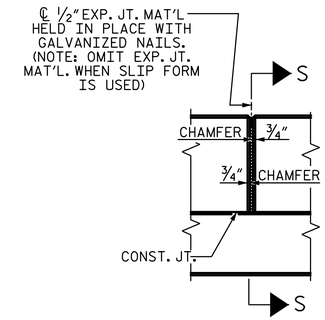

ELEVATION AT EXPANSION JOINTS

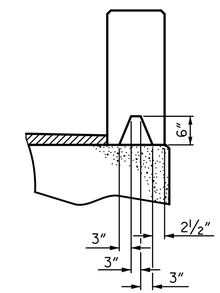

SECTION S-S

AT DAM IN OPEN JOINT (THIS IS TO BE USED ONLY WHEN SLIP FORM IS USED)

PROJECT NO. 17BP.7.R.90

GUILFORD COUNTY

STATION: 14+88.00 -L-

STATE OF NORTH CAROLINA
DEPARTMENT OF TRANSPORTATION
RALEIGH

SUPERSTRUCTURE

CONCRETE PARAPET DETAILS FOR 2 BAR METAL RAIL

PLANS PREPARED BY:
SIMPSON ENGINEERS & ASSOCIATES
5640 Dillard Drive
Suite 200
Cary, NC 27518
(919) 852-0468
(919) 852-0598 (Fax)
www.simpsonengr.com
LICENSURE NO. C-2521

NORTH CAROLINA PROFESSIONAL SEAL 11268 ENGINEER BETSY S. COX
3/20/2018

DOCUMENT NOT CONSIDERED FINAL UNLESS ALL SIGNATURES COMPLETED

REVISIONS							SHEET NO.
NO.	BY:	DATE:	NO.	BY:	DATE:		S-8
1			3				TOTAL SHEETS
2			4				19

DRAWN BY:	T. BANKOVICH	DATE:	3-18
CHECKED BY:	B.S. COX	DATE:	3-18
DESIGN ENGINEER OF RECORD:	B.S. COX	DATE:	3-18

DocuSign Envelope ID: 96A2AB8B-1CC7-460E-BC8D-E3B3DB7C39B9

3/20/2018 11:28:11 AM G:\Projects\2015\Division 7 (Hatch Mott)\17BP7R90 (Guilford 210) (105 33BBU 2BMR)\Structures\Drawings\Final(revised)\401_17BP7R90_SMU_SUP.dgn

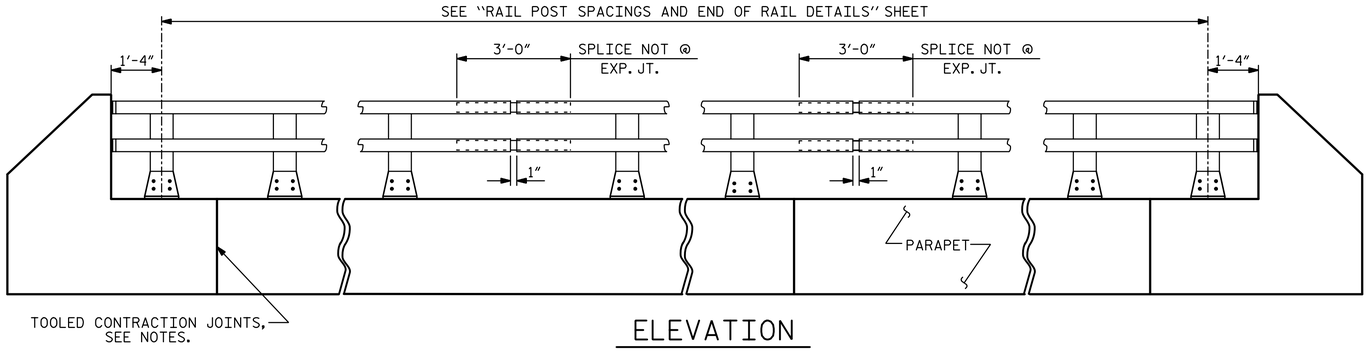

ELEVATION

NOTE : FOR ATTACHMENT OF METAL RAIL TO END POST, SEE "RAIL POST SPACING AND END OF RAIL DETAILS" SHEET.

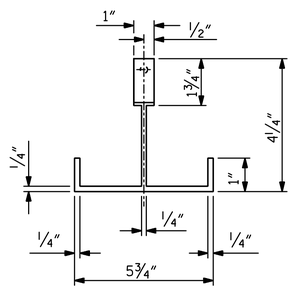

PLAN

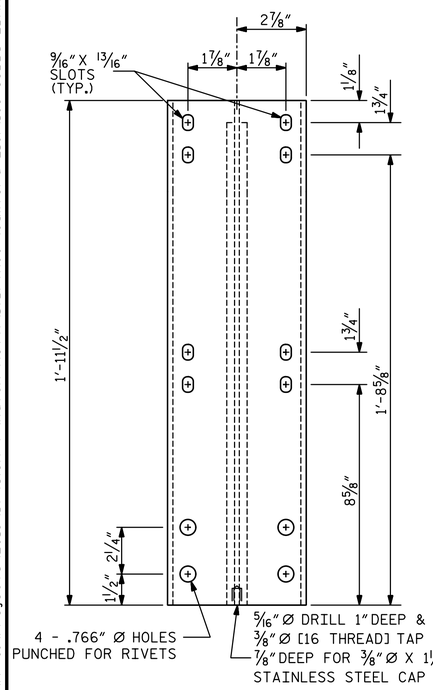

FRONT ELEVATION

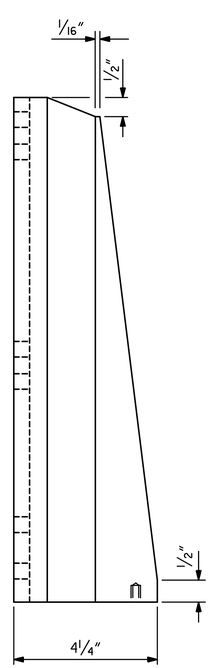

SIDE ELEVATION

DETAILS OF POST

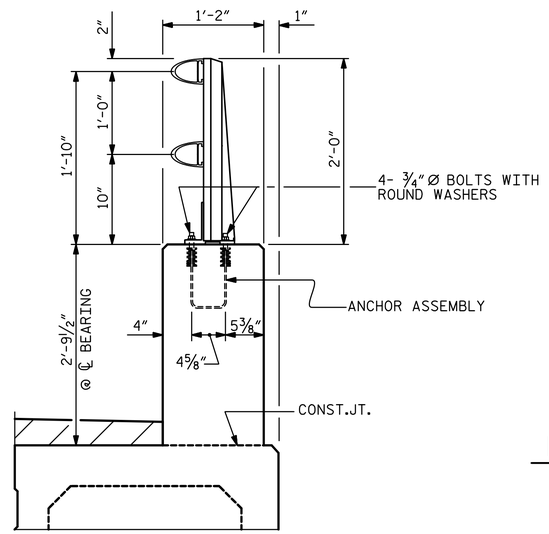

SECTION THRU PARAPET AND RAIL

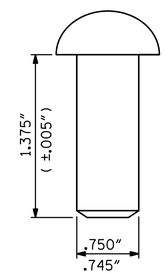

RIVET DETAIL

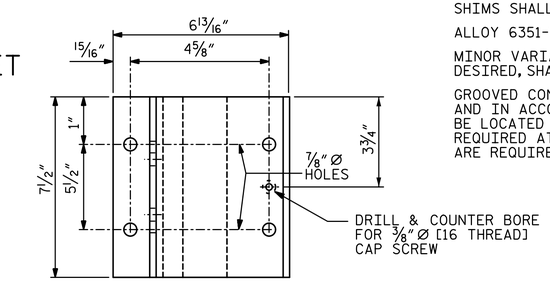

PLAN

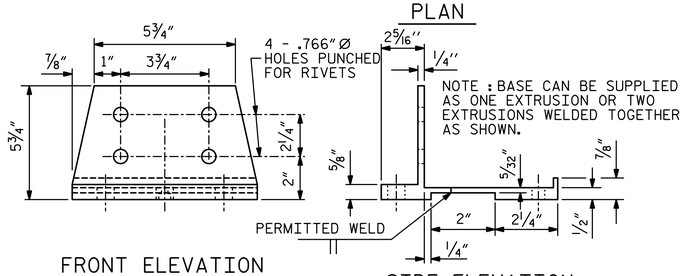

FRONT ELEVATION

SIDE ELEVATION

POST BASE DETAILS

NOTES:

AT THE CONTRACTOR'S OPTION, METAL RAIL MAY BE EITHER ALUMINUM OR GALVANIZED STEEL IN ACCORDANCE WITH THE REQUIREMENTS OF THE GENERAL NOTES AND THE FOLLOWING SPECIFICATIONS FOR THE ALTERNATE MATERIALS; HOWEVER, THE CONTRACTOR WILL BE REQUIRED TO USE THE SAME RAIL MATERIAL ON ALL STRUCTURES ON THE PROJECT FOR WHICH METAL RAIL IS DESIGNATED.

UNLESS OTHERWISE REQUIRED IN THE CONTRACT DOCUMENTS, THE CONTRACTOR HAS THE OPTION TO USE AN ALTERNATE TO THE 2 BAR METAL RAIL. THE ALTERNATE RAIL SHALL MEET THE REQUIREMENTS OF THE AASHTO LRFD BRIDGE DESIGN SPECIFICATIONS AND MUST BE LISTED ON THE DEPARTMENT'S APPROVED PRODUCTS LIST (APL) UNDER "2 BAR METAL RAIL ALTERNATE". ADJUSTMENTS TO THE CONCRETE PARAPET WILL NOT BE ALLOWED.

ALUMINUM RAILS:

MATERIAL FOR POSTS, BASES AND RAILS, EXPANSION BARS AND CLAMP BARS SHALL BE ASTM B-221 ALLOY 6061-T6.

MATERIAL FOR RIVETS SHALL BE ASTM B316 ALLOY 6061-T6. RIVETS SHALL BE STANDARD BUTTON HEAD AND CONE POINT COLD DRIVEN AS PER DRAWING.

THE BASE OF RAIL POSTS, OR ANY OTHER ALUMINUM SURFACE IN CONTACT WITH CONCRETE SHALL BE THOROUGHLY COATED WITH AN ALUMINUM IMPREGNATED CAULKING COMPOUND OF APPROVED QUALITY.

MATERIAL FOR SHIMS TO BE ASTM B209 ALLOY 6061-T6.

GALVANIZED STEEL RAILS:

MATERIAL AND GALVANIZING ARE TO CONFORM TO THE FOLLOWING SPECIFICATIONS:

POST, POST BASES, RAILS, EXPANSION BARS AND CLAMP BARS: AASHTO M270 GRADE 36 STRUCTURAL STEEL - GALVANIZED TO AASHTO M111.

RIVETS: RIVETS SHALL MEET THE REQUIREMENTS OF ASTM A502 FOR GRADE 1 RIVETS.

THE CUT ENDS OF GALVANIZED STEEL RAILING, AFTER GRINDING SMOOTH SHALL BE GIVEN TWO COATS OF ZINC RICH PAINT MEETING THE REQUIREMENTS OF FEDERAL SPECIFICATION MIL-P-26915 USAF TYPE 1, OR OF FEDERAL SPECIFICATIONS TT-P-641.

SHIMS: SHIMS SHALL MEET THE REQUIREMENTS OF ASTM A570 FOR GRADE 33 OR A611 FOR GRADE C AND SHALL BE GALVANIZED IN ACCORDANCE WITH AASHTO M111.

RAIL CAPS: RAIL CAPS SHALL MEET THE REQUIREMENTS OF ASTM A570 FOR GRADE 33 OR A611 FOR GRADE C AND SHALL BE GALVANIZED IN ACCORDANCE WITH AASHTO M111.

GENERAL NOTES:

RAILING SHALL BE CONTINUOUS FROM END POST TO END POST OF BRIDGE. EACH JOINT IN RAIL LENGTH SHALL BE SPLICED AS DETAILED. PANEL LENGTHS OF RAIL SHALL BE ATTACHED TO A MINIMUM OF THREE POSTS.

FOR END OF RAIL TO CLEAR FACE OF CONCRETE END POST DIMENSION, SEE "RAIL POST SPACING AND END OF RAIL DETAILS" SHEET.

CAP SCREWS SHALL BE ASTM F593 ALLOY 305 STAINLESS STEEL. WASHERS SHALL MEET THE REQUIREMENTS OF ASTM F844 EXCEPT THEY SHALL BE MADE FROM ALLOY 304 STAINLESS STEEL.

CERTIFIED MILL REPORTS ARE REQUIRED FOR RAILS AND POSTS. SHOP INSPECTION IS NOT REQUIRED.

METAL RAIL POSTS SHALL BE SET NORMAL TO CURB GRADE.

METHOD OF MEASUREMENT FOR METAL RAILS: FOR LENGTH OF METAL RAILS TO BE PAID FOR, SEE THE STANDARD SPECIFICATIONS.

CURVED RAIL USAGE: WHERE RAILS ARE TO BE USED ON BRIDGES ON HORIZONTAL AND/OR VERTICAL CURVATURE THE CONTRACTOR MAY, AT HIS OPTION, HAVE THE REQUIRED CURVATURE IN THE RAIL FORMED IN THE SHOP OR IN THE FIELD. IN EITHER EVENT, THE RAIL SHALL CONFORM WITHOUT BUCKLING OR KINKING TO THE REQUIRED CURVATURE IN A UNIFORM MANNER ACCEPTABLE TO THE ENGINEER.

TO INSURE FUTURE IDENTIFICATION OF THE FABRICATOR, A PERMANENT IDENTIFYING MARK SHALL BE PLACED ON EACH POST. THE METHOD OF MARKING AND LOCATION SHALL BE SUCH THAT IT DOES NOT DETRACT FROM THE APPEARANCE OF THE POST, BUT REMAINS VISIBLE AFTER RAIL PLACEMENT.

SHIMS SHALL BE USED AS NECESSARY FOR POST ALIGNMENT.

ALLOY 6351-T5 MAY BE SUBSTITUTED FOR ALLOY 6061-T6 WHERE APPLICABLE.

MINOR VARIATIONS IN DETAILS OF METAL RAIL WILL BE CONSIDERED. DETAILS OF SUCH VARIATIONS, IF DESIRED, SHALL BE SUBMITTED FOR APPROVAL.

GROOVED CONTRACTION JOINTS, 1/2" IN DEPTH, SHALL BE TOOLED IN ALL EXPOSED FACES OF THE PARAPET AND IN ACCORDANCE WITH ARTICLE 825-10(B) OF THE STANDARD SPECIFICATIONS. A CONTRACTION JOINT SHALL BE LOCATED AT EACH THIRD POINT BETWEEN PARAPET EXPANSION JOINTS. ONLY ONE CONTRACTION JOINT IS REQUIRED AT MIDPOINT OF PARAPET SEGMENTS LESS THAN 20 FEET IN LENGTH AND NO CONTRACTION JOINTS ARE REQUIRED FOR THOSE SEGMENTS LESS THAN 10 FEET IN LENGTH.

PAY LENGTH = 164.38 LF

PROJECT NO. 17BP.7.R.90

GUILFORD COUNTY

STATION: 14+88.00 -L-

SHEET 1 OF 2

STATE OF NORTH CAROLINA
DEPARTMENT OF TRANSPORTATION
RALEIGH

SUPERSTRUCTURE

2 BAR METAL RAIL

DRAWN BY: T. BANKOVICH	DATE: 3-18	
CHECKED BY: B.S. COX	DATE: 3-18	
DESIGN ENGINEER OF RECORD: B.S. COX	DATE: 3-18	

PLANS PREPARED BY:
SIMPSON ENGINEERS & ASSOCIATES
5640 Dillard Drive
Suite 200
Cary, NC 27518
(919) 852-0468
(919) 852-0598 (Fax)
www.simpsonengr.com
LICENSURE NO. C-2521

NORTH CAROLINA PROFESSIONAL SEAL 11268 ENGINEER BETSY S. COX
3/20/2018

DOCUMENT NOT CONSIDERED FINAL UNLESS ALL SIGNATURES COMPLETED

REVISIONS						SHEET NO.
NO.	BY:	DATE:	NO.	BY:	DATE:	S-9
1			3			TOTAL SHEETS
2			4			19

DocuSign Envelope ID: 96A2AB8B-1CC7-460E-BC8D-E3B3DB7C39B9

3/20/2018 11:28:11 AM G:\Projects\2015\Division 7 (Hatch Mott)\17BP7R90 (Guilford 210)105 33BBU 2BMR)\Structures\Drawings\Final(revised)\401_17BP7R90_SMU_SUP.dgn

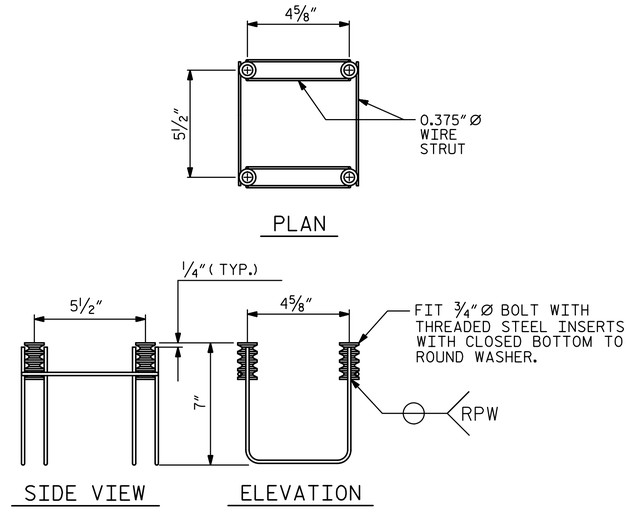

4-BOLT METAL RAIL ANCHOR ASSEMBLY

(36 ASSEMBLIES REQUIRED)

STRUCTURAL CONCRETE ANCHOR ASSEMBLY NOTES:

THE STRUCTURAL CONCRETE ANCHOR ASSEMBLY SHALL CONSIST OF THE FOLLOWING COMPONENTS :

A. FERRULES SHALL BE MADE FROM STEEL MEETING THE REQUIREMENTS OF AASHTO M169, GRADE 12L14 AND SHALL HAVE A MINIMUM LENGTH OF THREADS OF 2" FOR 3/4" FERRULES.

B. 4 - 3/4" Ø X 2 1/2" BOLTS WITH WASHERS. BOLTS SHALL CONFORM TO THE REQUIREMENTS OF ASTM A307. BOLTS AND WASHERS SHALL BE GALVANIZED. AT THE CONTRACTOR'S OPTION, STAINLESS STEEL BOLTS AND WASHERS MAY BE USED AS AN ALTERNATE FOR THE 3/4" Ø X 2 1/2" GALVANIZED BOLTS AND WASHERS. THEY SHALL CONFORM TO OR EXCEED THE MECHANICAL REQUIREMENTS OF ASTM A307. THE USE OF THIS ALTERNATE SHALL BE APPROVED BY THE ENGINEER.

C. WIRE STRUT SHOWN IN THE CONCRETE ANCHOR ASSEMBLY DETAIL IS THE MINIMUM ALLOWABLE SIZE AND SHALL HAVE A MINIMUM TENSILE STRENGTH OF 100,000 PSI. AS AN OPTION, A 7/16" Ø WIRE STRUT WITH A MINIMUM TENSILE STRENGTH OF 90,000 PSI IS ACCEPTABLE.

D. THE METAL RAIL ANCHOR ASSEMBLIES TO BE HOT DIPPED GALVANIZED TO CONFORM TO REQUIREMENTS OF AASHTO M111.

E. THE COST OF THE METAL RAIL ANCHOR ASSEMBLY WITH BOLTS AND WASHERS COMPLETE IN PLACE SHALL BE INCLUDED IN THE PRICE BID FOR LINEAR FEET OF METAL RAIL.

F. BOLTS TO BE TIGHTENED ONE-HALF TURN WITH A WRENCH FROM A FINGER-TIGHT POSITION.

THE CONTRACTOR MAY USE ADHESIVELY ANCHORED ANCHOR BOLTS IN PLACE OF THE METAL RAIL ANCHOR ASSEMBLY. LEVEL ONE FIELD TESTING IS REQUIRED, AND THE YIELD LOAD OF THE 3/4" Ø BOLT IS 10 KIPS. FOR ADHESIVELY ANCHORED ANCHOR BOLTS OR DOWELS, SEE THE STANDARD SPECIFICATIONS.

WHEN ADHESIVELY ANCHORED ANCHOR BOLTS ARE USED, BOLTS SHALL MEET THE REQUIREMENTS OF ASTM F593 ALLOY 304 STAINLESS STEEL WITH MINIMUM 75,000 PSI ULTIMATE STRENGTH. NUTS SHALL MEET THE REQUIREMENTS OF ASTM F594 ALLOY 304 STAINLESS STEEL AND WASHERS SHALL MEET THE REQUIREMENTS OF ASTM F844 EXCEPT THEY SHALL BE MADE FROM ALLOY 304 STAINLESS STEEL.

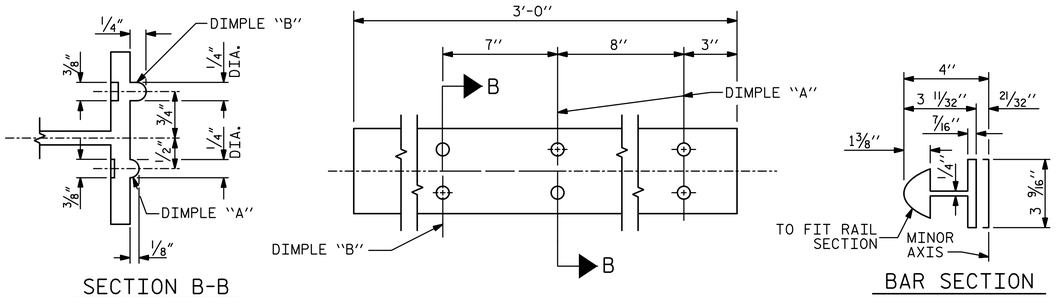

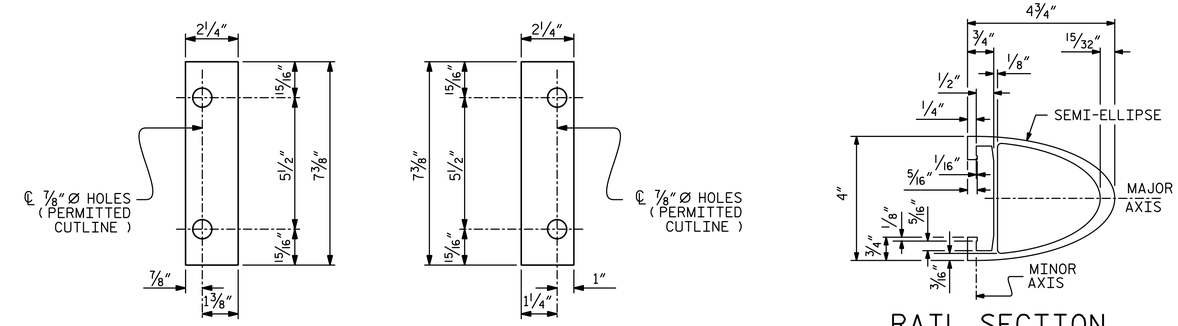

SHIM DETAILS

NOTE :
SHIMS MAY BE CUT ALONG PERMITTED CUTLINE OR SLOTTED TO EDGE OF PLATE TO FACILITATE PLACEMENT.

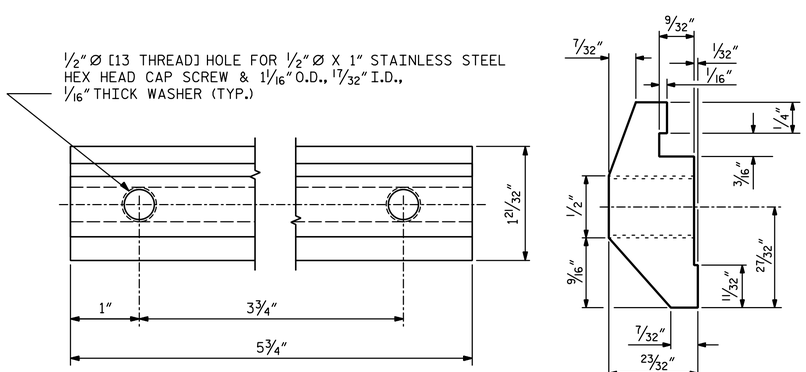

CLAMP BAR DETAIL

(4 REQUIRED PER POST)

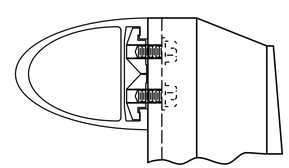

CLAMP ASSEMBLY

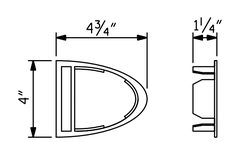

RAIL CAP

PROJECT NO. 17BP.7.R.90

GUILFORD COUNTY

STATION: 14+88.00 -L-

SHEET 2 OF 2

STATE OF NORTH CAROLINA
DEPARTMENT OF TRANSPORTATION
RALEIGH

SUPERSTRUCTURE

2 BAR METAL RAIL

PLANS PREPARED BY:

SIMPSON ENGINEERS & ASSOCIATES
5640 Dillard Drive
Suite 200
Cary, NC 27518
(919) 852-0468
(919) 852-0598 (Fax)
www.simpsonengr.com

LICENSURE NO. C-2521

NORTH CAROLINA PROFESSIONAL SEAL 1268 ENGINEER BETSY S. COX

3/20/2018

DOCUMENT NOT CONSIDERED FINAL UNLESS ALL SIGNATURES COMPLETED

DRAWN BY:	T. BANKOVICH	DATE:	3-18
CHECKED BY:	B.S. COX	DATE:	3-18
DESIGN ENGINEER OF RECORD:	B.S. COX	DATE:	3-18

REVISIONS								SHEET NO.
NO.	BY:	DATE:	NO.	BY:	DATE:			S-10
1			3					TOTAL SHEETS
2			4					19

DocuSign Envelope ID: 96A2AB8B-1CC7-460E-BC8D-E3B3DB7C39B9

3/20/2018 11:28:11 AM G:\Projects\2015\Division 7 (Hatch Mott)\17BP7R90 (Guilford 210) (105 33BBU 2BMR)\Structures\Drawings\Final(revised)\401_17BP7R90_SMU_SUP.dgn

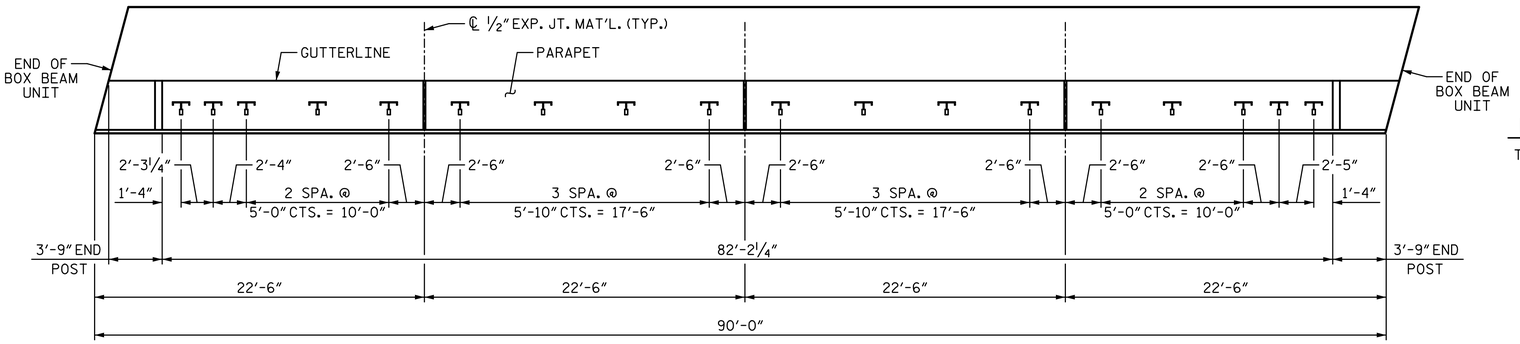

PLAN OF RAIL POST SPACING

(RIGHT EXTERIOR UNIT SHOWN, LEFT EXTERIOR UNIT SIMILAR)

STRUCTURAL CONCRETE INSERT NOTES:

THE STRUCTURAL CONCRETE INSERT ASSEMBLY SHALL CONSIST OF THE FOLLOWING COMPONENTS:

A. FERRULES SHALL BE MADE FROM STEEL MEETING THE REQUIREMENTS OF AASHTO M169, GRADE 12L14 AND SHALL HAVE A MINIMUM LENGTH OF THREADS OF 1 1/2".

B. 1 - 3/4" Ø X 1 5/8" BOLT WITH WASHER. BOLT SHALL CONFORM TO THE REQUIREMENTS OF ASTM A307. BOLT AND WASHER SHALL BE GALVANIZED. (AT THE CONTRACTOR'S OPTION, STAINLESS STEEL BOLT AND WASHER MAY BE USED AS AN ALTERNATE FOR THE 3/4" Ø X 1 5/8" GALVANIZED BOLT AND WASHER. THEY SHALL CONFORM TO OR EXCEED THE MECHANICAL REQUIREMENTS OF ASTM A307. THE USE OF THIS ALTERNATE SHALL BE APPROVED BY THE ENGINEER.)

C. WIRE STRUT SHOWN IN THE CONCRETE INSERT ASSEMBLY DETAIL IS THE MINIMUM ALLOWABLE SIZE AND SHALL HAVE A MINIMUM TENSILE STRENGTH OF 100,000 PSI. AS AN OPTION, A 7/16" Ø WIRE STRUT WITH A MINIMUM TENSILE STRENGTH OF 90,000 PSI IS ACCEPTABLE.

METAL RAIL TO END POST CONNECTION NOTES:

THE METAL RAIL TO END POST CONNECTION SHALL CONSIST OF THE FOLLOWING COMPONENTS:

A. 1/2" PLATES SHALL CONFORM TO AASHTO M270 GRADE 36 AND SHALL BE GALVANIZED AFTER FABRICATION.

B. 3/4" STRUCTURAL CONCRETE INSERT SHALL HAVE A WORKING LOAD SHEAR CAPACITY OF 4800 LBS. THE FERRULES SHALL ENGAGE A 3/4"Ø X 1 5/8" BOLT WITH 2" O.D. WASHER IN PLACE. THE 3/4"Ø X 1 5/8" BOLT SHALL HAVE N. C. THREADS.

C. CAP SCREWS FOR RAIL ATTACHMENT TO ANGLE SHALL CONFORM TO THE REQUIREMENTS OF ASTM F593 ALLOY 305 STAINLESS STEEL. CAP SCREWS TO BE CENTERED IN SLOTS AT 60°F.

D. STANDARD CLAMP BARS (SEE METAL RAIL SHEET).

E. 1/2" Ø PIPE SLEEVES (IF REQUIRED) TO BE GALVANIZED.

THE COST OF THE STANDARD CLAMP BARS AND CAP SCREWS USED IN THE METAL RAIL TO END POST CONNECTION SHALL BE INCLUDED IN THE UNIT CONTRACT PRICE BID FOR LINEAR FEET OF 1 OR 2 BAR METAL RAILS.

THE 3/4" STRUCTURAL CONCRETE INSERT WITH BOLT SHALL BE ASSEMBLED IN THE SHOP.

THE COST OF THE 3/4" STRUCTURAL CONCRETE INSERT ASSEMBLY, AND THE 1/2" PLATES COMPLETE IN PLACE SHALL BE INCLUDED IN THE VARIOUS PAY ITEMS.

THE CONTRACTOR, AT HIS OPTION, MAY USE AN ADHESIVE BONDING SYSTEM IN LIEU OF THE STRUCTURAL CONCRETE INSERT EMBEDDED IN THE END POST. IF THE ADHESIVE BONDING SYSTEM IS USED, THE 3/4" Ø X 1 5/8" BOLT WITH WASHER SHALL BE REPLACED WITH A 3/4"Ø X 6 1/2" BOLT AND 2" O.D. WASHER. ALL SPECIFICATIONS THAT APPLY TO THE 3/4" Ø X 1 5/8" BOLT SHALL APPLY TO THE 3/4"Ø X 6 1/2" BOLT. FIELD TESTING OF THE ADHESIVE BONDING SYSTEM IS NOT REQUIRED.

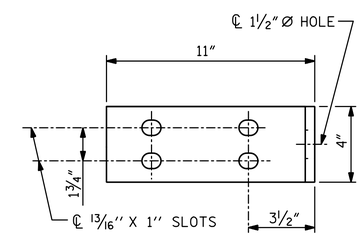

ELEVATION

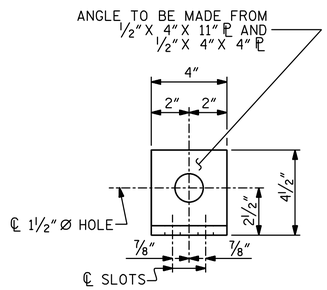

END VIEW

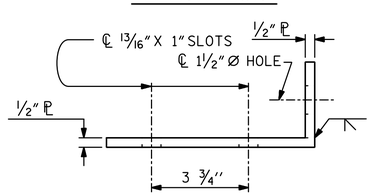

TOP VIEW

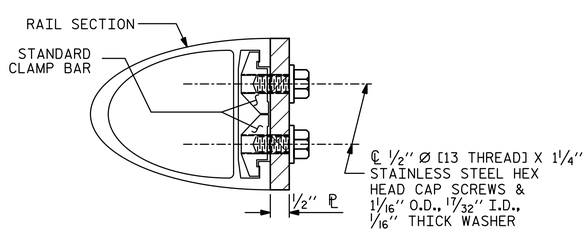

SECTION H-H

DETAILS FOR ATTACHING METAL RAILS TO END POST

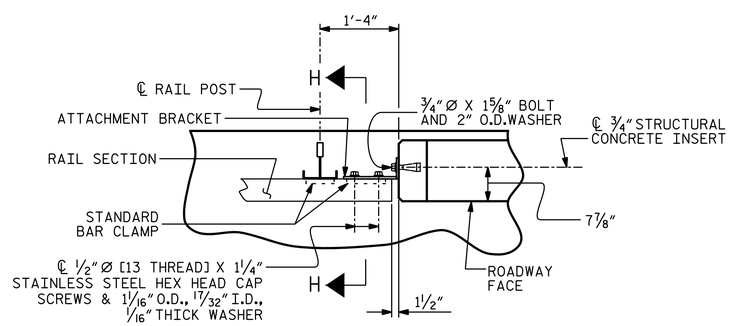

PLAN - RAIL AND END POST

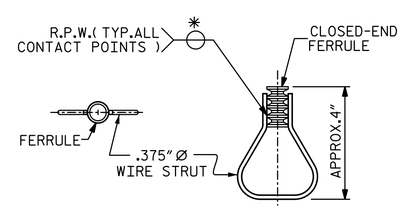

PLAN ELEVATION

STRUCTURAL CONCRETE INSERT

* EACH WELDED ATTACHMENT OF WIRE TO FERRULE SHALL DEVELOP THE TENSILE STRENGTH OF THE WIRE.

PROJECT NO. 17BP.7.R.90

GUILFORD COUNTY

STATION: 14+88.00 -L-

STATE OF NORTH CAROLINA
DEPARTMENT OF TRANSPORTATION
RALEIGH

SUPERSTRUCTURE

RAIL POST SPACING AND END OF RAIL DETAILS

FOR TWO BAR METAL RAILS

PLANS PREPARED BY:
SIMPSON ENGINEERS & ASSOCIATES
5640 Dillard Drive
Suite 200
Cary, NC 27518
(919) 852-0468
(919) 852-0598 (Fax)
www.simpsonengr.com
LICENSURE NO. C-2521

NORTH CAROLINA PROFESSIONAL SEAL 11268 ENGINEER BETSY S. COX
3/20/2018

DOCUMENT NOT CONSIDERED FINAL UNLESS ALL SIGNATURES COMPLETED

REVISIONS								SHEET NO.
NO.	BY:	DATE:	NO.	BY:	DATE:			S-11
1			3					TOTAL SHEETS
2			4					19

DRAWN BY:	T. BANKOVICH	DATE:	3-18
CHECKED BY:	B.S. COX	DATE:	3-18
DESIGN ENGINEER OF RECORD:	B.S. COX	DATE:	3-18

DocuSign Envelope ID: 96A2AB8B-1CC7-460E-BC8D-E3B3DB7C39B9

3/20/2018 11:28:12 AM G:\Projects\2015\Division 7 (Hatch Mott)\17BP7R90 (Guilford 210) (105 33BBU 2BMR)\Structures\Drawings\Final(revised)\401_17BP7R90_SMU_SUP.dgn

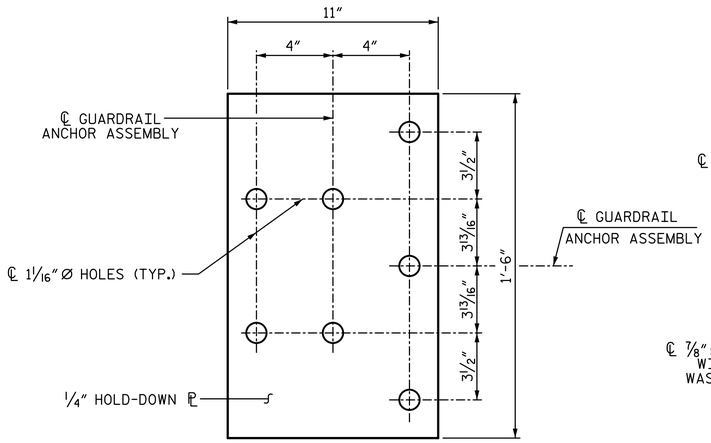

PLAN

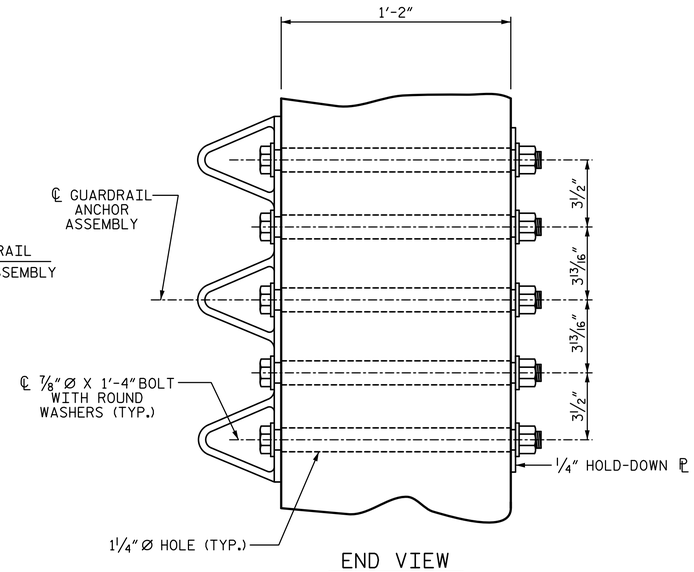

END VIEW

GUARDRAIL ANCHOR ASSEMBLY DETAILS

NOTES:

THE GUARDRAIL ANCHOR ASSEMBLY SHALL CONSIST OF A 1/4" HOLD DOWN PLATE AND 7 - 7/8" Ø BOLTS WITH NUTS AND WASHERS.

THE HOLD-DOWN PLATE SHALL CONFORM TO AASHTO M270 GRADE 36. AFTER FABRICATION, THE HOLD-DOWN PLATE SHALL BE HOT-DIP GALVANIZED IN ACCORDANCE WITH AASHTO M111.

BOLTS SHALL CONFORM TO THE REQUIREMENTS OF ASTM A307 AND NUTS SHALL CONFORM TO THE REQUIREMENTS OF AASHTO M291. BOLTS, NUTS AND WASHERS SHALL BE GALVANIZED. AT THE CONTRACTOR'S OPTION, STAINLESS STEEL BOLTS, NUTS AND WASHERS MAY BE USED AS AN ALTERNATE FOR THE 7/8" Ø GALVANIZED BOLTS, NUTS AND WASHERS. THEY SHALL CONFORM TO OR EXCEED THE MECHANICAL REQUIREMENTS OF ASTM A307. THE USE OF THIS ALTERNATE SHALL BE APPROVED BY THE ENGINEER.

THE GUARDRAIL ANCHOR ASSEMBLY IS REQUIRED AT ALL POINTS WHERE APPROACH GUARDRAIL IS TO BE ATTACHED TO THE END OF THE PARAPET. FOR POINTS OF ATTACHMENT, SEE SKETCH.

AFTER INSTALLATION, THE EXPOSED THREAD OF THE BOLT SHALL BE BURRED WITH A SHARP POINTED TOOL.

THE COST OF THE GUARDRAIL ANCHOR ASSEMBLIES WITH BOLTS, NUTS AND WASHERS COMPLETE IN PLACE, SHALL BE INCLUDED IN THE VARIOUS PAY ITEMS.

THE VERTICAL REINFORCING BARS MAY BE SHIFTED SLIGHTLY IN THE END POST TO CLEAR ASSEMBLY BOLTS.

THE 1 1/4" Ø HOLES SHALL BE FORMED OR DRILLED WITH A CORE BIT. IMPACT TOOLS WILL NOT BE PERMITTED. ANY CONCRETE DAMAGED BY THIS WORK SHALL BE REPAIRED TO THE SATISFACTION OF THE ENGINEER.

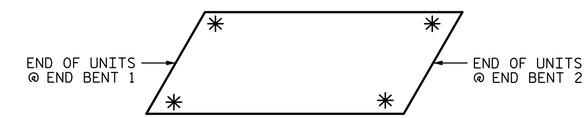

SKETCH SHOWING POINTS OF ATTACHMENT

✳ LOCATION OF GUARDRAIL ATTACHMENT

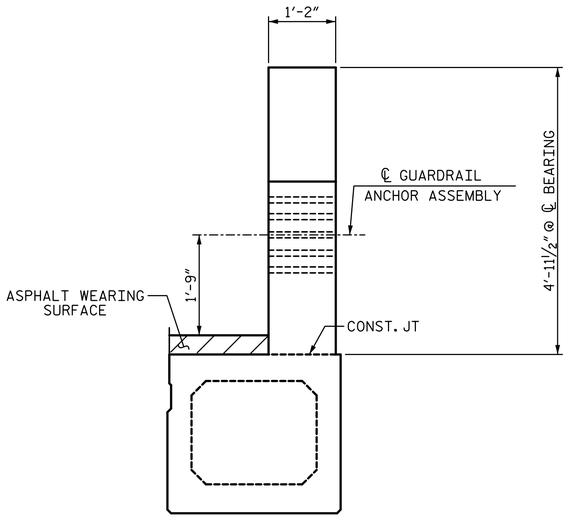

END VIEW

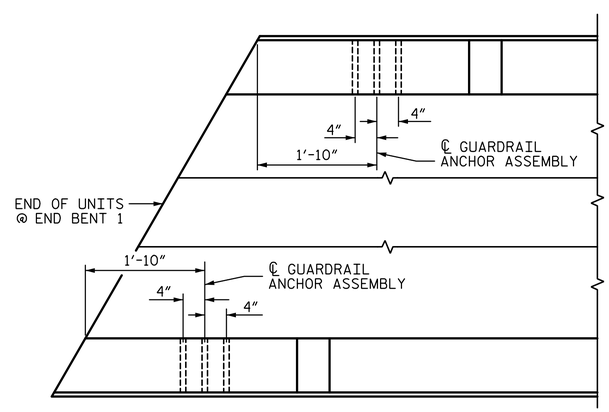

PLAN

(END BENT 1 SHOWN, END BENT 2 SIMILAR)

LOCATION OF GUARDRAIL ANCHOR AT END POST

PROJECT NO. 17BP.7.R.90

GUILFORD COUNTY

STATION: 14+88.00 -L-

STATE OF NORTH CAROLINA
DEPARTMENT OF TRANSPORTATION
RALEIGH

SUPERSTRUCTURE

GUARDRAIL ANCHORAGE DETAILS FOR METAL RAILS

PLANS PREPARED BY:

SIMPSON ENGINEERS & ASSOCIATES
5640 Dillard Drive
Suite 200
Cary, NC 27518
(919) 852-0468
(919) 852-0598 (Fax)
www.simpsonengr.com
LICENSURE NO. C-2521

NORTH CAROLINA PROFESSIONAL SEAL 11268 ENGINEER BETSY S. COX
3/20/2018

DOCUMENT NOT CONSIDERED FINAL UNLESS ALL SIGNATURES COMPLETED

DRAWN BY:	T. BANKOVICH	DATE:	3-18
CHECKED BY:	B.S. COX	DATE:	3-18
DESIGN ENGINEER OF RECORD:	B.S. COX	DATE:	3-18

REVISIONS						SHEET NO.
NO.	BY:	DATE:	NO.	BY:	DATE:	S-12
1			3			TOTAL SHEETS
2			4			19

DocuSign Envelope ID: 96A2AB8B-1CC7-460E-BC8D-E3B3DB7C39B9

3/20/2018 11:28:12 AM G:\Projects\2015\Division 7 (Hatch Mott)\17BP7R90 (Guilford 210) (105 33BBU 2BMR)\Structures\Drawings\Final(revised)\401_17BP7R90_SMU_EB.dgn

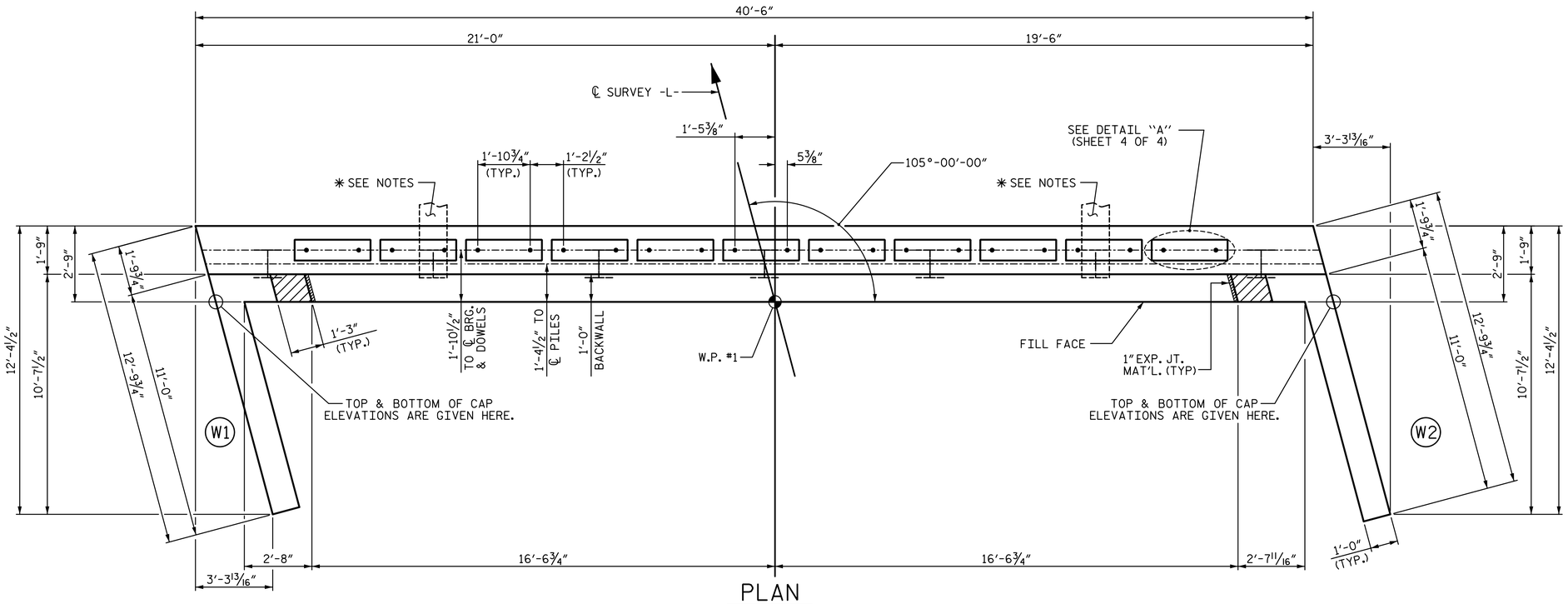

PLAN

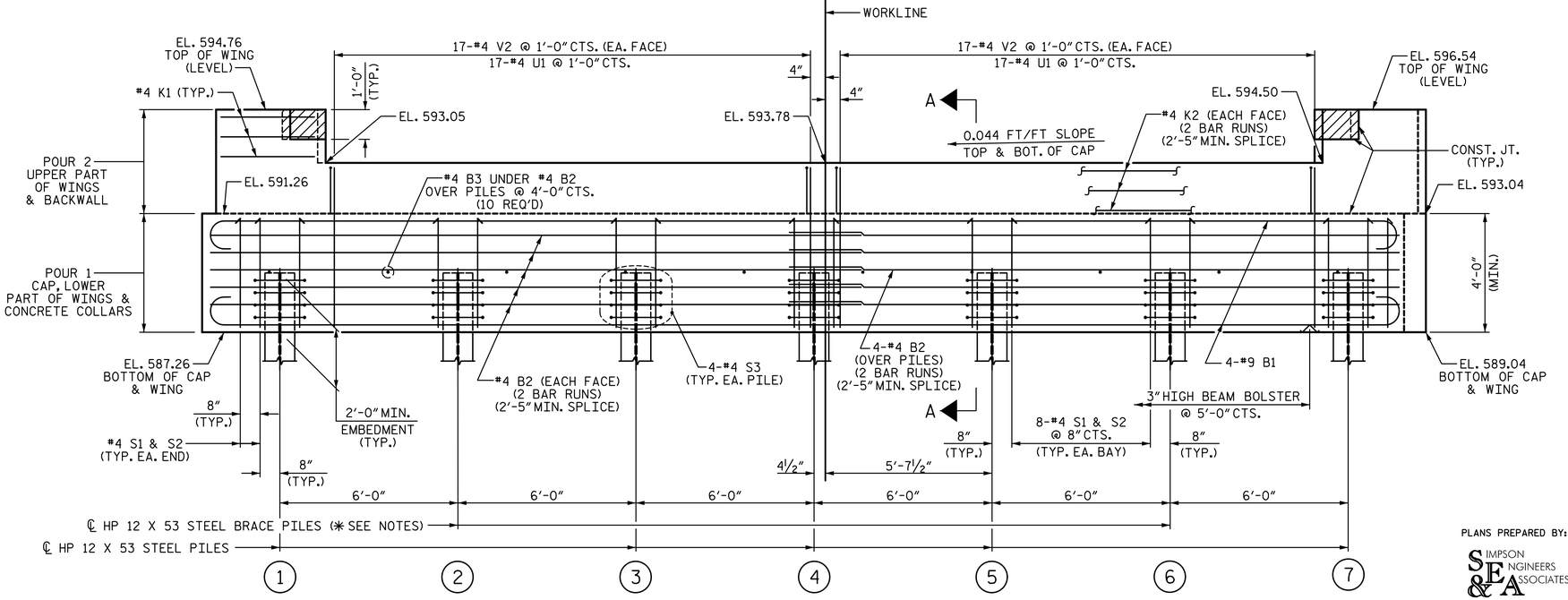

ELEVATION

WINGS NOT SHOWN FOR CLARITY.
FOR SECTION A-A, SEE SHEET 4 OF 4.
CONCRETE COLLARS FOR STEEL PILES NOT SHOWN IN PLAN AND ELEVATION VIEWS FOR CLARITY.
SEE "CORROSION PROTECTION FOR STEEL PILES DETAIL", SHEET 4 OF 4.

NOTES:

STIRRUPS IN CAP MAY BE SHIFTED AS NECESSARY TO CLEAR DOWELS.

THE CONCRETE IN THE SHADED AREA OF THE WING SHALL BE POURED AFTER THE CONCRETE PARAPET IS CAST IF SLIP FORMING IS USED.

FOR PILE SPLICE DETAILS, SEE SHEET 4 OF 4.

FOR WING DETAILS, SEE SHEET 3 OF 4.

✳ IF BRACE PILES ARE REQUIRED TO BE DRILLED-IN, INSTALL THESE PILES VERTICALLY. SEE FOUNDATION NOTES ON "GENERAL DRAWING" SHEET.

TOP OF PILE ELEVATIONS	
1	589.37
2	589.63
3	589.89
4	590.16
5	590.42
6	590.69
7	590.95

PROJECT NO. 17BP.7.R.90
GUILFORD COUNTY
STATION: 14+88.00 -L-

SHEET 1 OF 4

STATE OF NORTH CAROLINA
DEPARTMENT OF TRANSPORTATION
RALEIGH

SUBSTRUCTURE

END BENT 1

PLANS PREPARED BY:
SIMPSON ENGINEERS & ASSOCIATES
5640 Dillard Drive
Suite 200
Cary, NC 27518
(919) 852-0468
(919) 852-0598 (Fax)
www.simpsonengr.com
LICENSURE NO. C-2521

NORTH CAROLINA PROFESSIONAL SEAL 11268 ENGINEER BETSY S. COX
3/20/2018

DOCUMENT NOT CONSIDERED FINAL UNLESS ALL SIGNATURES COMPLETED

DRAWN BY:	T. BANKOVICH	DATE:	3-18
CHECKED BY:	B.S. COX	DATE:	3-18
DESIGN ENGINEER OF RECORD:	B.S. COX	DATE:	3-18

REVISIONS						SHEET NO.
NO.	BY:	DATE:	NO.	BY:	DATE:	S-13
1			3			TOTAL SHEETS
2			4			19

DocuSign Envelope ID: 96A2AB8B-1CC7-460E-BC8D-E3B3DB7C39B9

3/20/2018 11:28:12 AM G:\Projects\2015\Division 7 (Hatch Mott)\17BP7R90 (Guilford 210) (105 33BBU 2BMR)\Structures\Drawings\Final(revised)\401_17BP7R90_SMU_EB.dgn

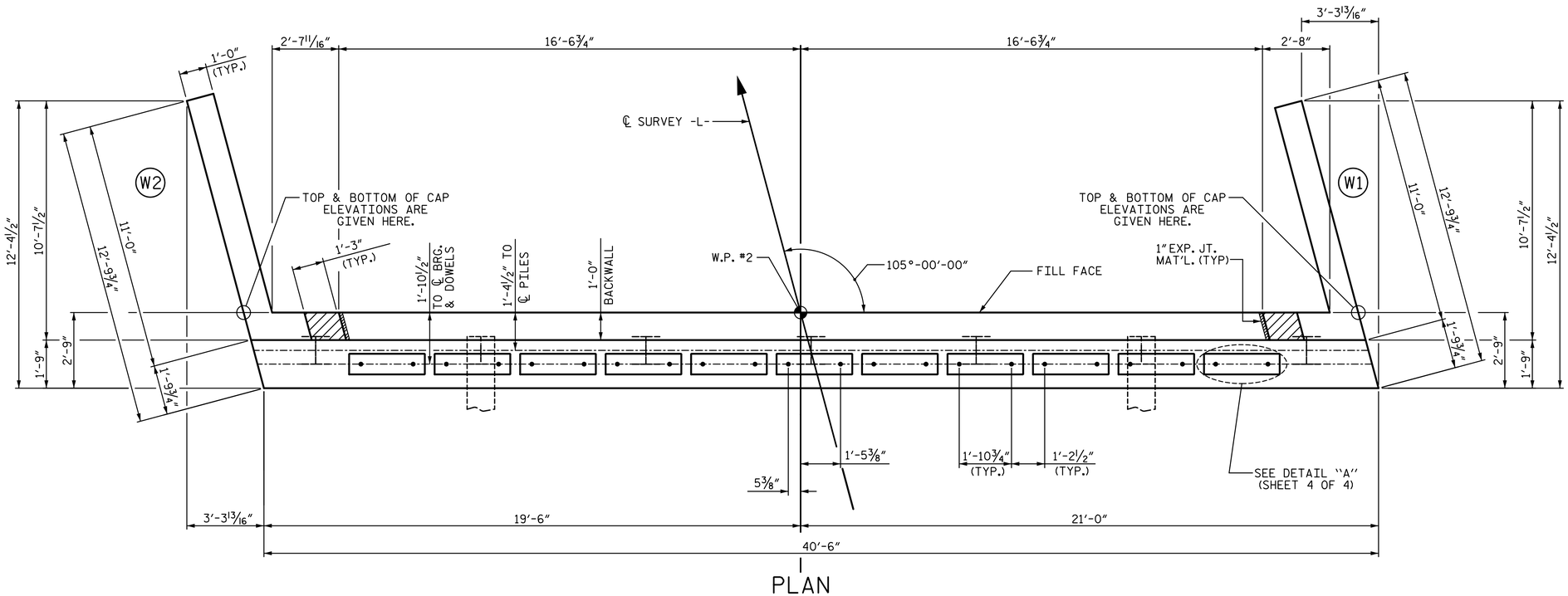

PLAN

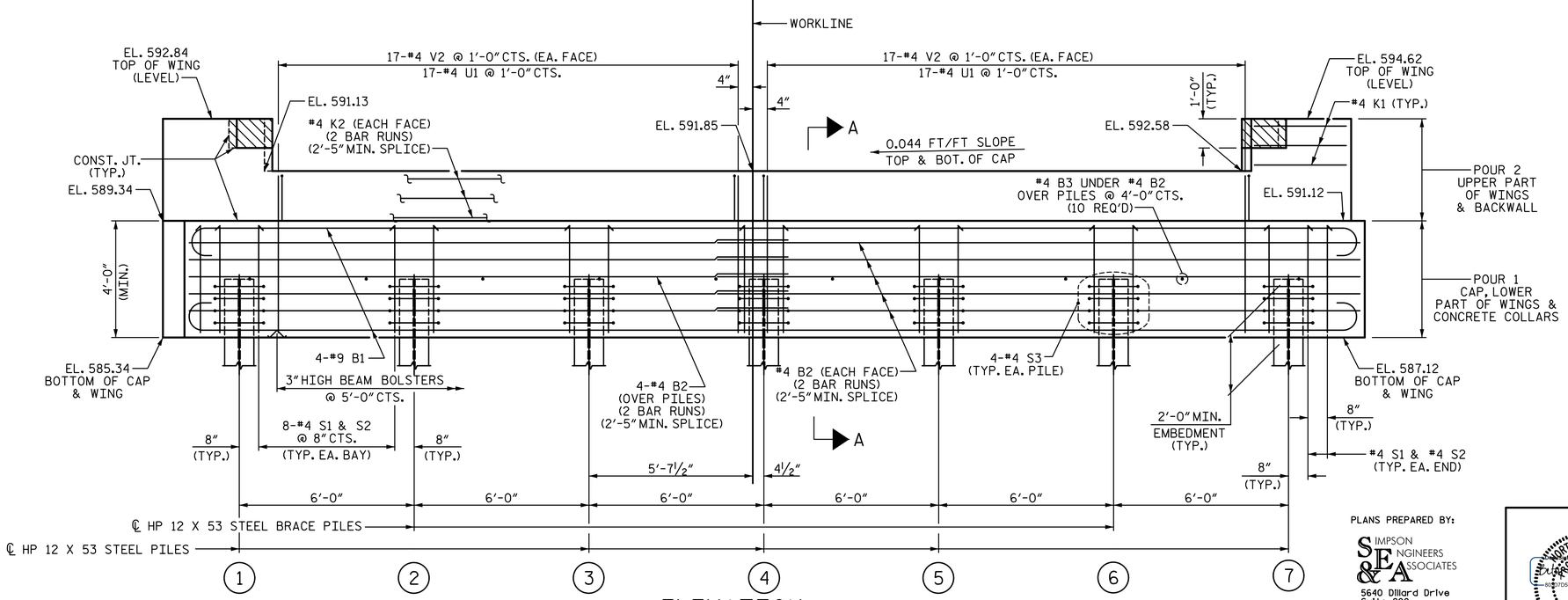

ELEVATION

WINGS NOT SHOWN FOR CLARITY.
FOR SECTION A-A, SEE SHEET 4 OF 4.
CONCRETE COLLARS FOR STEEL PILES NOT SHOWN IN PLAN AND ELEVATION VIEWS FOR CLARITY.
SEE "CORROSION PROTECTION FOR STEEL PILES DETAIL", SHEET 4 OF 4.

NOTES:

STIRRUPS IN CAP MAY BE SHIFTED AS NECESSARY TO CLEAR DOWELS.

THE CONCRETE IN THE SHADED AREA OF THE WING SHALL BE POURED AFTER THE CONCRETE PARAPET IS CAST IF SLIP FORMING IS USED.

FOR PILE SPLICE DETAILS, SEE SHEET 4 OF 4.

FOR WING DETAILS, SEE SHEET 3 OF 4.

TOP OF PILE ELEVATIONS	
1	587.48
2	587.74
3	588.00
4	588.27
5	588.53
6	588.80
7	589.06

PROJECT NO. 17BP.7.R.90
GUILFORD COUNTY
STATION: 14+88.00 -L-

SHEET 2 OF 4

STATE OF NORTH CAROLINA
DEPARTMENT OF TRANSPORTATION
RALEIGH
SUBSTRUCTURE

END BENT 2

PLANS PREPARED BY:
SIMPSON ENGINEERS & ASSOCIATES
5640 Dillard Drive
Suite 200
Cary, NC 27518
(919) 852-0468
(919) 852-0598 (Fax)
www.simpsonengr.com
LICENSURE NO. C-2521

NORTH CAROLINA PROFESSIONAL SEAL 11268 ENGINEER BETSY S. COX
3/20/2018

DOCUMENT NOT CONSIDERED FINAL UNLESS ALL SIGNATURES COMPLETED

DRAWN BY:	T. BANKOVICH	DATE:	3-18
CHECKED BY:	B.S. COX	DATE:	3-18
DESIGN ENGINEER OF RECORD:	B.S. COX	DATE:	3-18

REVISIONS								SHEET NO.
NO.	BY:	DATE:	NO.	BY:	DATE:			S-14
1			3					TOTAL SHEETS
2			4					19

DocuSign Envelope ID: 96A2AB8B-1CC7-460E-BC8D-E3B3DB7C39B9

3/20/2018 11:28:12 AM G:\Projects\2015\Division 7 (Hatch Mott)\17BP7R90 (Guilford 210)(105 33BBU 2BMR)\Structures\Drawings\Final(revised)\401_17BP7R90_SMU_EB.dgn

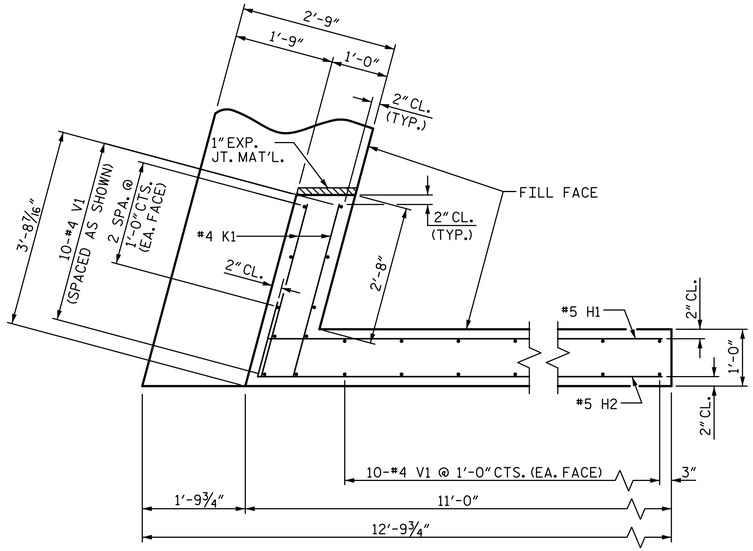

PLAN OF WING (W1)

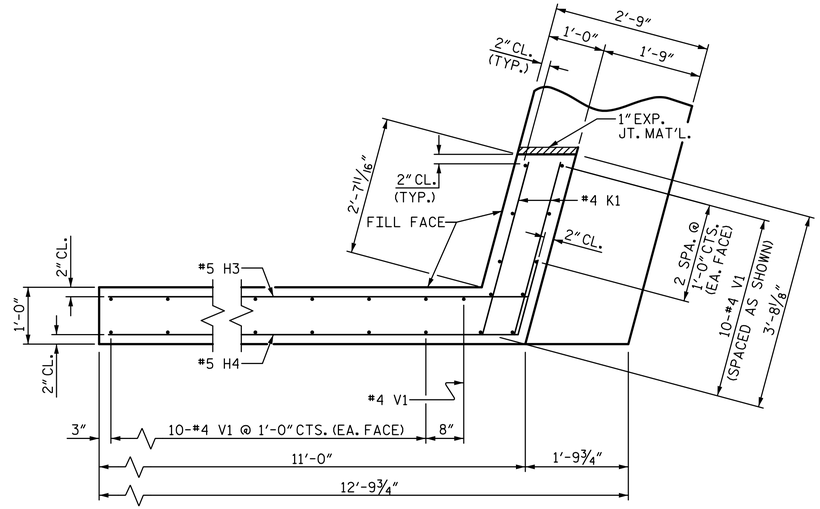

PLAN OF WING (W2)

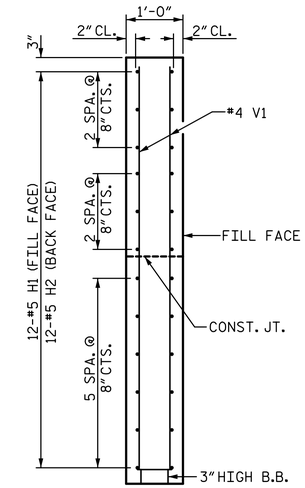

SECTION X-X

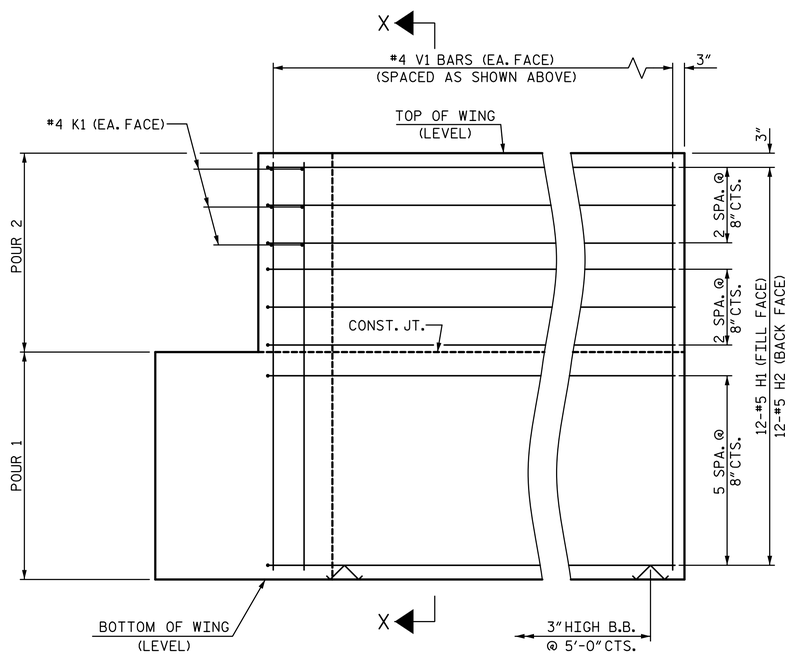

ELEVATION OF WING (W1)

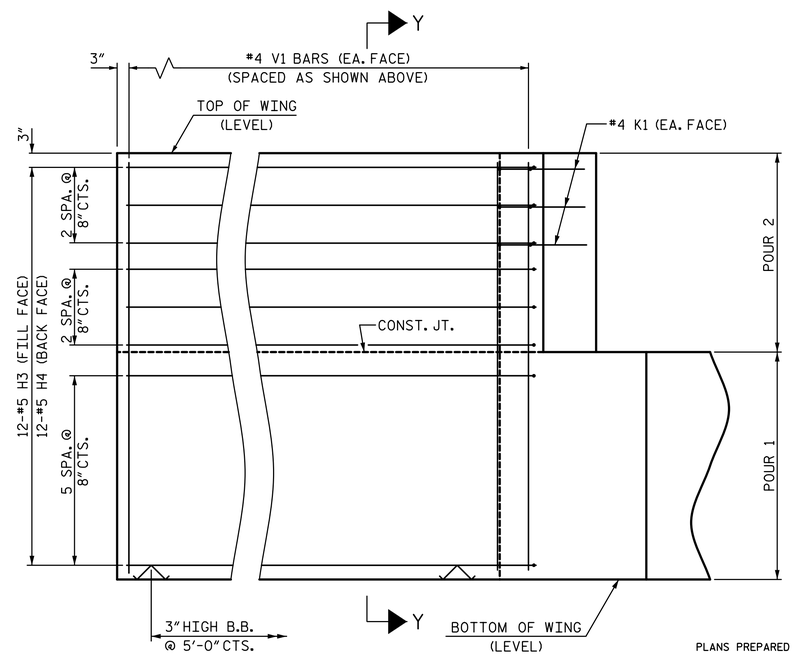

ELEVATION OF WING (W2)

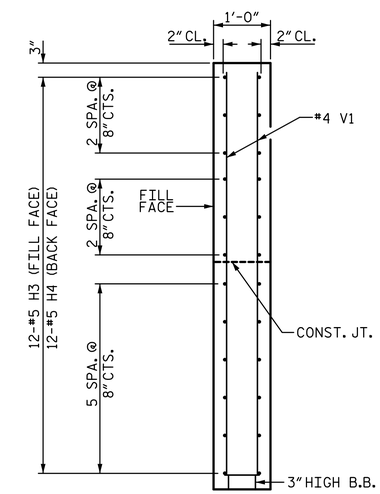

SECTION Y-Y

WING DETAILS

PROJECT NO. 17BP.7.R.90

GUILFORD COUNTY

STATION: 14+88.00 -L-

SHEET 3 OF 4

STATE OF NORTH CAROLINA
DEPARTMENT OF TRANSPORTATION
RALEIGH

SUBSTRUCTURE

END BENT
WING DETAILS

PLANS PREPARED BY:

SIMPSON ENGINEERS & ASSOCIATES
5640 Dillard Drive
Suite 200
Cary, NC 27518
(919) 852-0468
(919) 852-0598 (Fax)
www.simpsonengr.com
LICENSURE NO. C-2521

NORTH CAROLINA PROFESSIONAL SEAL 11268 ENGINEER BETSY S. COX
3/20/2018

DOCUMENT NOT CONSIDERED FINAL UNLESS ALL SIGNATURES COMPLETED

DRAWN BY:	T. BANKOVICH	DATE:	3-18
CHECKED BY:	B.S. COX	DATE:	3-18
DESIGN ENGINEER OF RECORD:	B.S. COX	DATE:	3-18

REVISIONS						SHEET NO.
NO.	BY:	DATE:	NO.	BY:	DATE:	S-15
1			3			TOTAL SHEETS
2			4			19

DocuSign Envelope ID: 96A2AB8B-1CC7-460E-BC8D-E3B3DB7C39B9

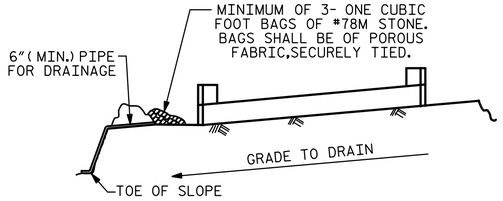

BAGGED STONE AND PIPE SHALL BE PLACED IMMEDIATELY AFTER COMPLETION OF END BENT EXCAVATION. PIPE MAY BE EITHER CONCRETE, CORRUGATED STEEL, CORRUGATED ALUMINUM ALLOY, OR CORRUGATED PLASTIC. PERFORATED PIPE WILL NOT BE ALLOWED.

BAGGED STONE SHALL REMAIN IN PLACE UNTIL THE ENGINEER DIRECTS THAT IT BE REMOVED. THE CONTRACTOR SHALL REMOVE AND DISPOSE OF SILT ACCUMULATIONS AT BAGGED STONE WHEN SO DIRECTED BY THE ENGINEER. BAGS SHALL BE REMOVED AND REPLACED WHENEVER THE ENGINEER DETERMINES THAT THEY HAVE DETERIORATED AND LOST THEIR EFFECTIVENESS.

NO SEPARATE PAYMENT WILL BE MADE FOR THIS WORK AND THE ENTIRE COST OF THIS WORK SHALL BE INCLUDED IN THE UNIT CONTRACT PRICE BID FOR THE SEVERAL PAY ITEMS.

TEMPORARY DRAINAGE AT END BENT

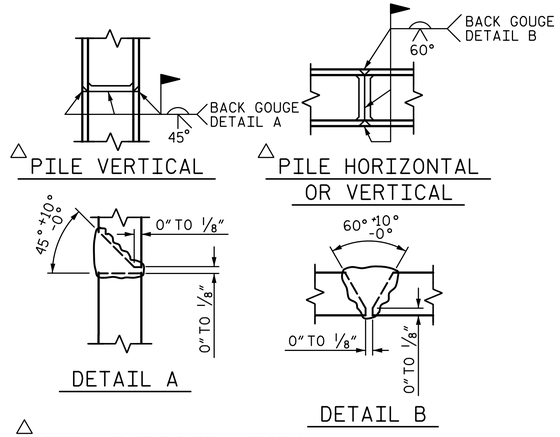

△ POSITION OF PILE DURING WELDING.

PILE SPLICE DETAILS

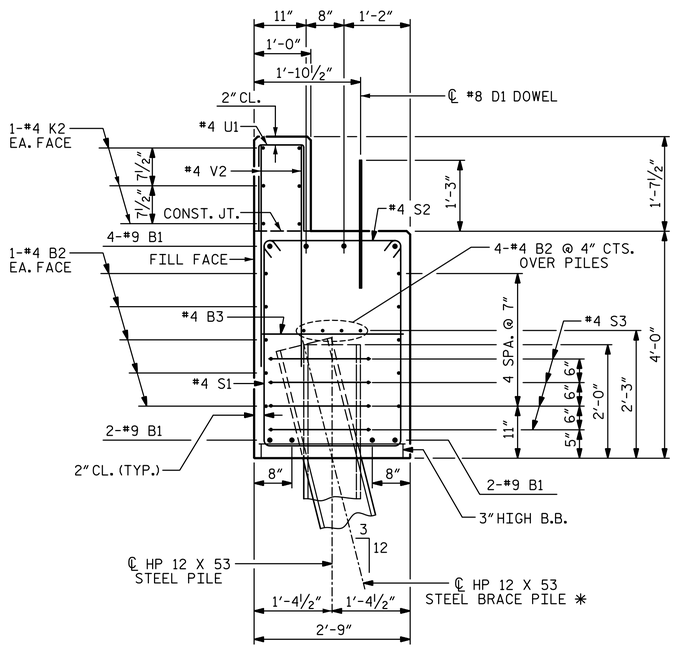

SECTION A-A

(CONCRETE COLLAR NOT SHOWN FOR CLARITY. SEE "CORROSION PROTECTION FOR STEEL PILES DETAIL.")
✳ IF BRACE PILES ARE REQUIRED TO BE DRILLED-IN AT END BENT 1, INSTALL THESE PILES VERTICALLY. SEE FOUNDATION NOTES ON "GENERAL DRAWING" SHEET.

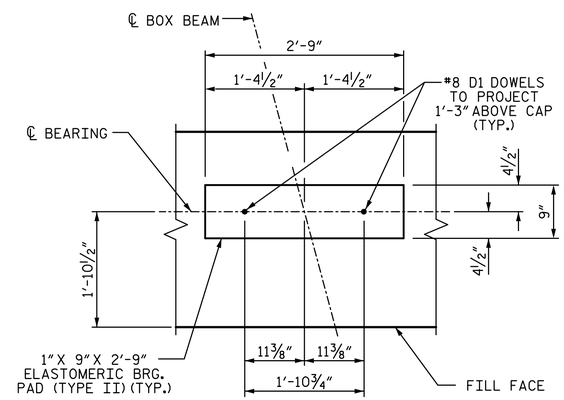

DETAIL "A"

(END BENT 1 SHOWN, END BENT 2 SIMILAR BY ROTATION)

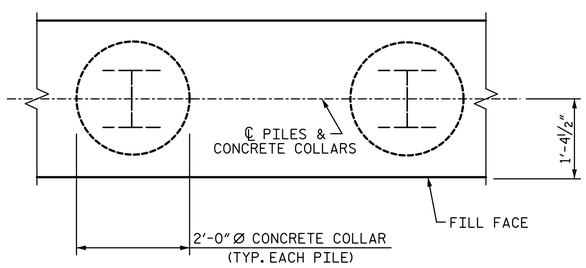

PLAN

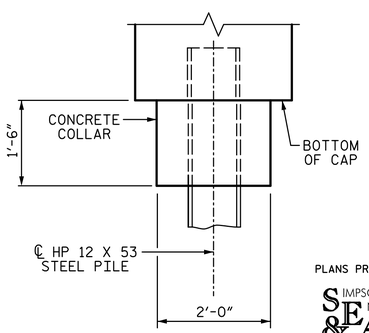

ELEVATION

CORROSION PROTECTION FOR STEEL PILES DETAIL

(END BENT 1 SHOWN, END BENT 2 SIMILAR BY ROTATION)

BAR TYPES

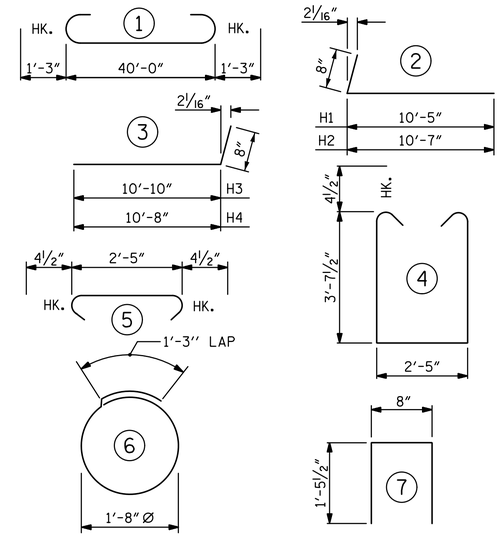

ALL BAR DIMENSIONS ARE OUT TO OUT.

END BENT 1	
HP 12 X 53 STEEL PILES	
NO: 7	LF = 105
PILE EXCAVATION IN SOIL	LF = 52
PILE EXCAVATION NOT IN SOIL	LF = 32
PILE DRIVING EQUIPMENT SETUP FOR HP 12 X 53 STEEL PILES	NO: 7

END BENT 2	
HP 12 X 53 STEEL PILES	
NO: 7	LF = 140
STEEL PILE POINTS	NO: 7
PILE DRIVING EQUIPMENT SETUP FOR HP 12 X 53 STEEL PILES	NO: 7

BILL OF MATERIAL
FOR ONE END BENT

BAR	NO.	SIZE	TYPE	LENGTH	WEIGHT
B1	8	#9	1	42'-6"	1156
B2	28	#4	STR	21'-4"	399
B3	10	#4	STR	2'-5"	16
D1	22	#8	STR	2'-3"	132
H1	12	#5	2	11'-1"	139
H2	12	#5	2	11'-3"	141
H3	12	#5	3	11'-6"	144
H4	12	#5	3	11'-4"	142
K1	12	#4	STR	3'-3"	26
K2	12	#4	STR	21'-4"	171
S1	52	#4	4	10'-5"	362
S2	52	#4	5	3'-2"	110
S3	28	#4	6	6'-6"	122
U1	34	#4	7	3'-7"	81
V1	61	#4	STR	7'-2"	292
V2	68	#4	STR	5'-3"	238

REINFORCING STEEL (FOR ONE END BENT) 3671 LBS.

CLASS A CONCRETE BREAKDOWN (FOR ONE END BENT)

POUR 1	CAP, LOWER PART OF WINGS & COLLARS	20.7 C.Y.
POUR 2	BACKWALL & UPPER PART OF WINGS	5.5 C.Y.
TOTAL CLASS A CONCRETE		26.2 C.Y.

PROJECT NO. 17BP.7.R.90
GUILFORD COUNTY
STATION: 14+88.00 -L-

SHEET 4 OF 4

STATE OF NORTH CAROLINA
DEPARTMENT OF TRANSPORTATION
RALEIGH
SUBSTRUCTURE

END BENT 1 & 2 DETAILS

PLANS PREPARED BY:
SIMPSON ENGINEERS & ASSOCIATES
5640 Dillard Drive
Suite 200
Cary, NC 27518
(919) 852-0468
(919) 852-0598 (Fax)
www.simpsonengr.com
LICENSURE NO. C-2521

NORTH CAROLINA PROFESSIONAL SEAL 11268 ENGINEER BETSY S. COX
3/20/2018

DOCUMENT NOT CONSIDERED FINAL UNLESS ALL SIGNATURES COMPLETED

REVISIONS						SHEET NO.
NO.	BY:	DATE:	NO.	BY:	DATE:	S-16
1			3			TOTAL SHEETS
2			4			19

DRAWN BY: T. BANKOVICH DATE: 3-18
CHECKED BY: B.S. COX DATE: 3-18
DESIGN ENGINEER OF RECORD: B.S. COX DATE: 3-18

3/20/2018 11:28:13 AM G:\Projects\2015\Division 7 (Hatch Mott)\17BP7R90 (Guilford 210)(105 33BBU 2BMR)\Structures\Drawings\Final(revised)\401_17BP7R90_SMU_EB.dgn

DocuSign Envelope ID: 96A2AB8B-1CC7-460E-BC8D-E3B3DB7C39B9

3/20/2018 11:28:13 AM G:\Projects\2015\Division 7 (Hatch Mott)\17BP7R90 (Guilford 210) (105 33BBU 2BMR)\Structures\Drawings\Final(revised)\401_17BP7R90_SMU_RR.dgn

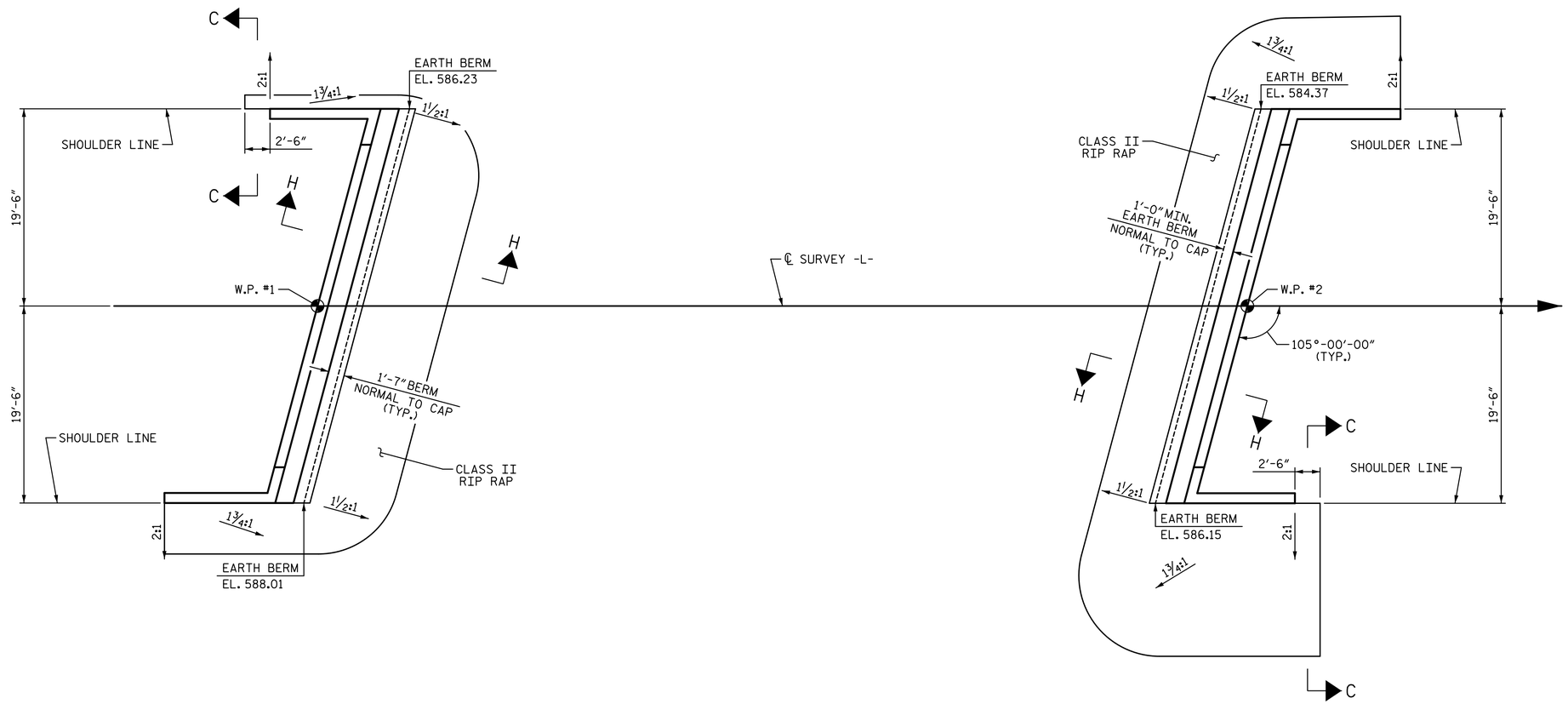

@ END BENT 1

PLAN OF RIP RAP

@ END BENT 2

ESTIMATED QUANTITIES		
BRIDGE @ STA. 14+88.00 -L-	RIP RAP CLASS II (2'-0" THICK)	GEOTEXTILE FOR DRAINAGE
	TONS	SQUARE YARDS
END BENT 1	60	70
END BENT 2	125	140

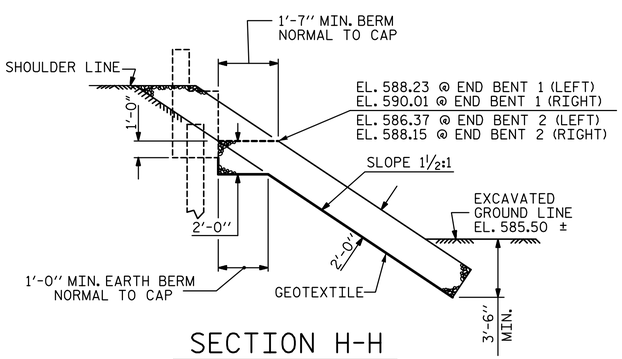

SECTION H-H

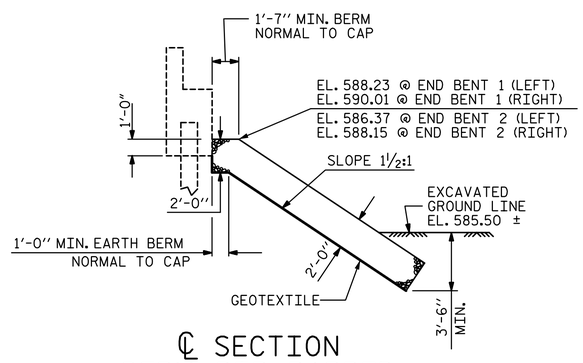

℄ SECTION
BERM RIP RAPPED

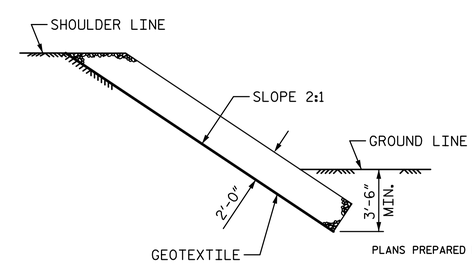

SECTION C-C

PROJECT NO. 17BP.7.R.90
GUILFORD COUNTY
STATION: 14+88.00 -L-

STATE OF NORTH CAROLINA
DEPARTMENT OF TRANSPORTATION
RALEIGH

RIP RAP DETAILS

PLANS PREPARED BY:
SIMPSON ENGINEERS & ASSOCIATES
5640 Dillard Drive
Suite 200
Cary, NC 27518
(919) 852-0468
(919) 852-0598 (Fax)
www.simpsonengr.com
LICENSURE NO. C-2521

NORTH CAROLINA PROFESSIONAL SEAL 11268 ENGINEER BETSY S. COX
3/20/2018

DRAWN BY: T. BANKOVICH DATE: 3-18
CHECKED BY: B.S. COX DATE: 3-18
DESIGN ENGINEER OF RECORD: B.S. COX DATE: 3-18

DOCUMENT NOT CONSIDERED FINAL
UNLESS ALL SIGNATURES COMPLETED

REVISIONS						SHEET NO.
NO.	BY:	DATE:	NO.	BY:	DATE:	S-17
1			3			TOTAL SHEETS
2			4			19

DocuSign Envelope ID: 96A2AB8B-1CC7-460E-BC8D-E3B3DB7C39B9

3/20/2018 11:28:13 AM G:\Projects\2015\Division 7 (Hatch Mott)\17BP7R90 (Guilford 210) (105 33BBU 2BMR)\Structures\Drawings\Final(revised)\401_17BP7R90_SMU_AS.dgn

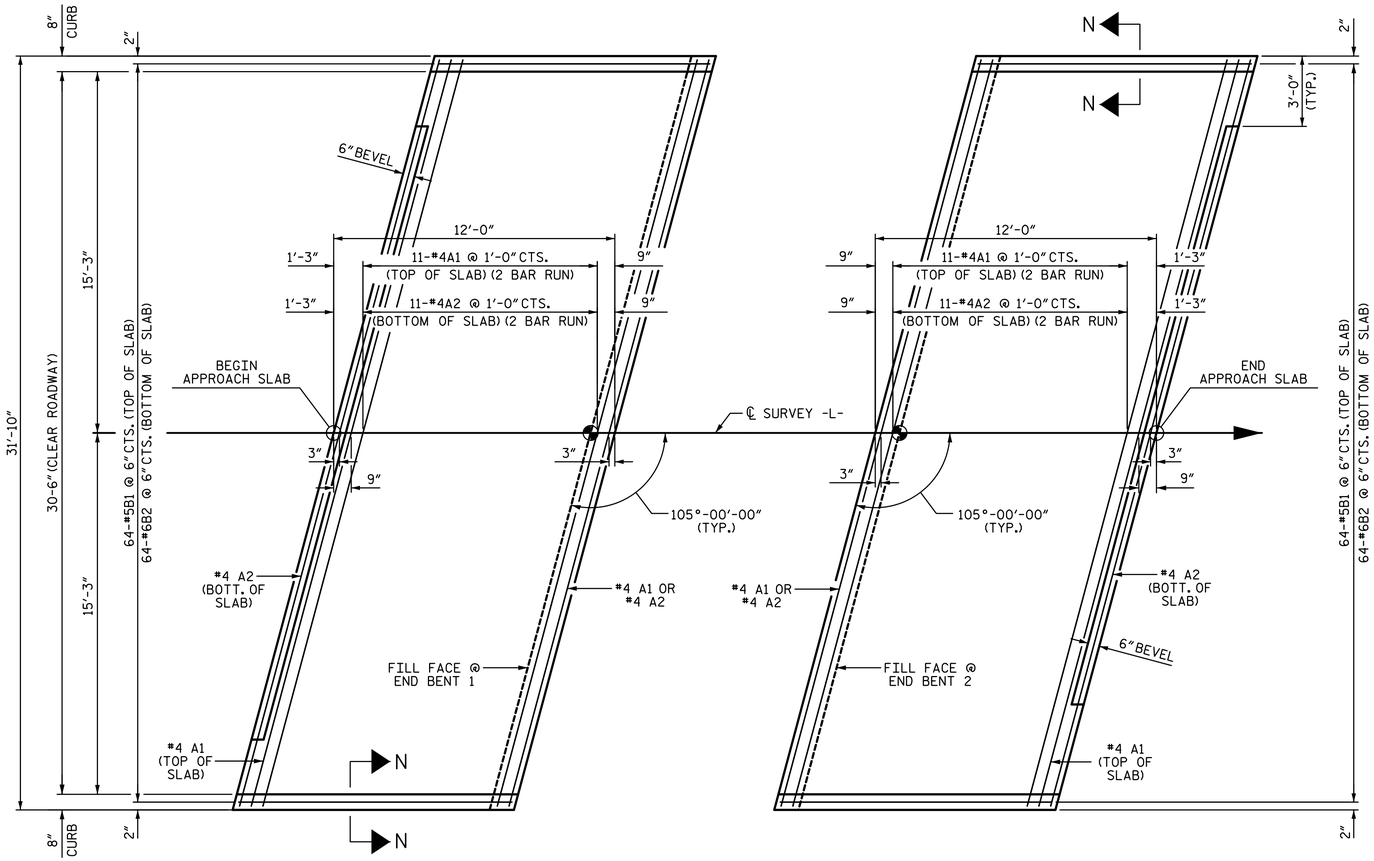

PLAN @ END BENT 1 PLAN @ END BENT 2

DIMENSIONS SHOWN ARE TYPICAL FOR BOTH APPROACH SLABS

NOTES:

FOR BRIDGE APPROACH FILL INCLUDING GEOTEXTILE, 4"Ø DRAINAGE PIPE, AND SELECT MATERIAL BACKFILL, SEE ROADWAY PLANS.

GEOTEXTILE SHALL BE TYPE 1 IN ACCORDANCE WITH THE STANDARD SPECIFICATIONS SECTION 1056.

SELECT MATERIAL BACKFILL (CLASS V OR CLASS VI) SHALL BE IN ACCORDANCE WITH STANDARD SPECIFICATIONS SECTION 1016.

SELECT MATERIAL BACKFILL IS TO BE CONTINUOUS ALONG FILL FACE OF BACKWALL FROM OUTSIDE EDGE TO OUTSIDE EDGE OF APPROACH SLAB.

AREA BETWEEN THE WINGWALL AND APPROACH SLAB SHALL BE GRADED TO DRAIN THE WATER AWAY FROM THE FILL FACE OF THE BRIDGE AND SHALL BE PAVED. SEE ROADWAY PLANS.

FOR THE 4"Ø DRAINAGE PIPE OUTLET(S), SEE ROADWAY STANDARD DRAWINGS.

APPROACH SLAB GROOVING IS NOT REQUIRED.

BILL OF MATERIAL

APPROACH SLAB AT EB 1

BAR	NO.	SIZE	TYPE	LENGTH	WEIGHT
✳ A1	26	#4	STR	17'-4"	301
A2	26	#4	STR	17'-3"	300
✳ B1	64	#5	STR	11'-1"	740
B2	64	#6	STR	11'-7"	1113
REINFORCING STEEL				LBS.	1413
✳ EPOXY COATED REINFORCING STEEL				LBS.	1041
CLASS AA CONCRETE				C. Y.	16.7

APPROACH SLAB AT EB 2

BAR	NO.	SIZE	TYPE	LENGTH	WEIGHT
✳ A1	26	#4	STR	17'-4"	301
A2	26	#4	STR	17'-3"	300
✳ B1	64	#5	STR	11'-1"	740
B2	64	#6	STR	11'-7"	1113
REINFORCING STEEL				LBS.	1413
✳ EPOXY COATED REINFORCING STEEL				LBS.	1041
CLASS AA CONCRETE				C. Y.	16.7

SPLICE CHART

BAR SIZE	EPOXY COATED	UNCOATED
#4	2'-0"	1'-9"
#5	2'-6"	2'-2"
#6	3'-10"	2'-7"

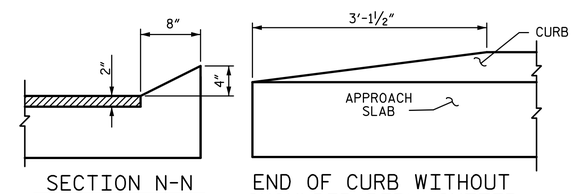

SECTION N-N END OF CURB WITHOUT SHOULDER BERM GUTTER

CURB DETAILS

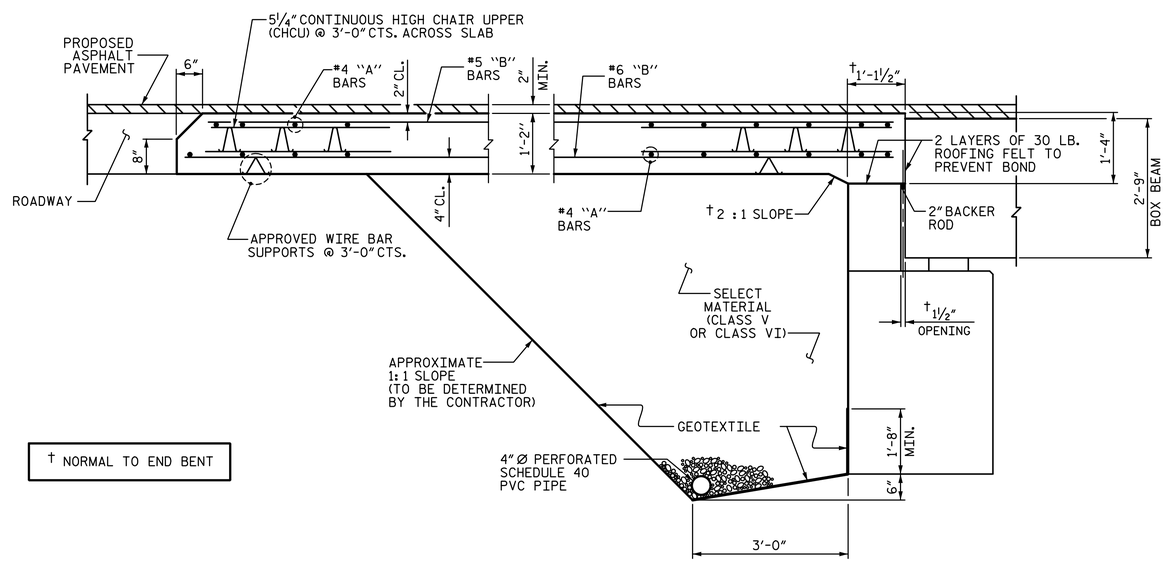

† NORMAL TO END BENT

SECTION THRU SLAB

(TYPE II - MODIFIED APPROACH FILL)

PROJECT NO. 17BP.7.R.90

GUILFORD COUNTY

STATION: 14+88.00 -L-

SHEET 1 OF 2

STATE OF NORTH CAROLINA
DEPARTMENT OF TRANSPORTATION
RALEIGH

BRIDGE APPROACH SLAB FOR PRESTRESSED CONCRETE BOX BEAM UNIT (SUB-REGIONAL TIER)-105° SKEW

PLANS PREPARED BY:

SIMPSON ENGINEERS & ASSOCIATES
5640 Dillard Drive
Suite 200
Cary, NC 27518
(919) 852-0468
(919) 852-0598 (Fax)
www.simpsonengr.com
LICENSURE NO. C-2521

NORTH CAROLINA PROFESSIONAL SEAL 11268 ENGINEER BETSY S. COX
3/20/2018

DRAWN BY: T. BANKOVICH DATE: 3-18
CHECKED BY: B.S. COX DATE: 3-18
DESIGN ENGINEER OF RECORD: B.S. COX DATE: 3-18

DOCUMENT NOT CONSIDERED FINAL UNLESS ALL SIGNATURES COMPLETED

REVISIONS						SHEET NO.
NO.	BY:	DATE:	NO.	BY:	DATE:	S-18
1			3			TOTAL SHEETS
2			4			19

DocuSign Envelope ID: 96A2AB8B-1CC7-460E-BC8D-E3B3DB7C39B9

3/20/2018 11:28:13 AM G:\Projects\2015\Division 7 (Hatch Mott)\17BP7R90 (Guilford 210)(105 33BBU 2BMR)\Structures\Drawings\Final(revised)\401_17BP7R90_SMU_AS.dgn

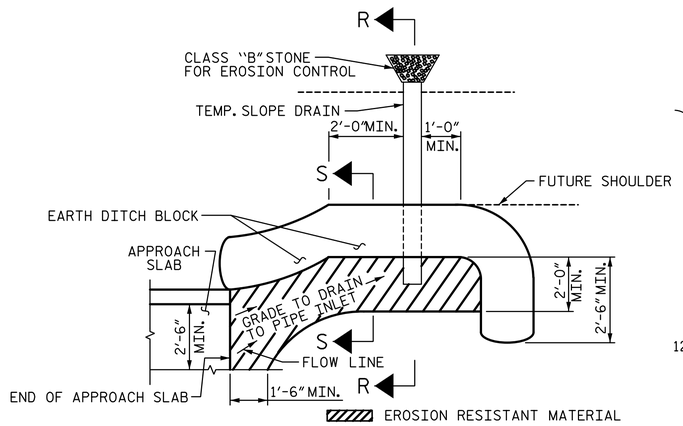

NOTE: IMMEDIATELY AFTER THE CONSTRUCTION OF THE APPROACH SLAB, THE CONTRACTOR SHALL PROVIDE TEMPORARY BERM AND SLOPE DRAIN. CONTRACTOR SHALL GRADE TO PIPE INLET AND PROVIDE EROSION RESISTANT MATERIAL AS SHOWN. THE EROSION RESISTANT MATERIAL SHALL BE EITHER 1) ASPHALT PLANT MIX, TYPE 1 OR TYPE 2, MIN. 2" DEPTH, 2) EROSION CONTROL MAT, OR 3) CONCRETE, AS DIRECTED BY THE ENGINEER. THE SLOPE DRAIN SHALL CONSIST OF A NON-PERFORATED TEMPORARY DRAINAGE PIPE, 12 INCHES IN DIAMETER.

PLAN VIEW

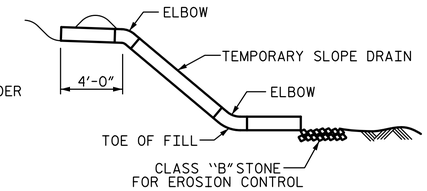

SECTION R-R

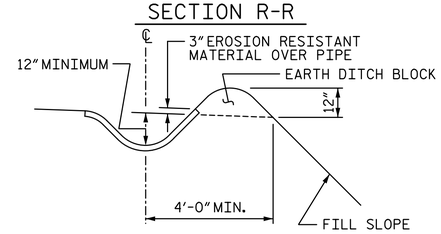

SECTION S-S

TEMPORARY BERM AND SLOPE DRAIN DETAILS

(TO BE USED WHEN SHOULDER BERM GUTTER IS REQUIRED)

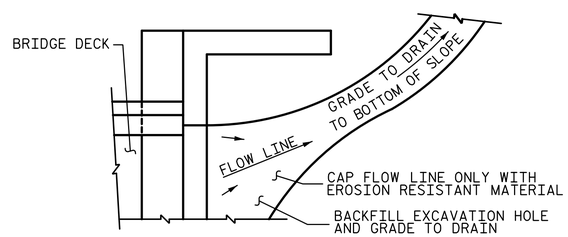

NOTE: IF THE APPROACH SLAB IS NOT CONSTRUCTED IMMEDIATELY AFTER THE BACKFILLING OF THE END BENT EXCAVATION, GRADE TO DRAIN TO THE BOTTOM OF THE SLOPE AND PROVIDE EROSION RESISTANT MATERIAL, SUCH AS FIBERGLASS ROVING OR AS DIRECTED BY THE ENGINEER TO PREVENT SOIL EROSION AND TO PROTECT THE AREA ADJACENT TO THE STRUCTURE. THE CONTRACTOR WILL BE REQUIRED TO REMOVE THESE MATERIALS PRIOR TO CONSTRUCTION OF THE APPROACH SLAB.

TEMPORARY DRAINAGE DETAIL

PROJECT NO. 17BP.7.R.90
GUILFORD COUNTY
STATION: 14+88.00 -L-

SHEET 2 OF 2

STATE OF NORTH CAROLINA
DEPARTMENT OF TRANSPORTATION
RALEIGH

BRIDGE APPROACH SLAB DETAILS

PLANS PREPARED BY:

SIMPSON ENGINEERS & ASSOCIATES
5640 Dillard Drive
Suite 200
Cary, NC 27518
(919) 852-0468
(919) 852-0598 (Fax)
www.simpsonengr.com
LICENSURE NO. C-2521

NORTH CAROLINA PROFESSIONAL SEAL 11268 ENGINEER BETSY S. COX
3/20/2018

DOCUMENT NOT CONSIDERED FINAL UNLESS ALL SIGNATURES COMPLETED

DRAWN BY:	T. BANKOVICH	DATE:	3-18
CHECKED BY:	B.S. COX	DATE:	3-18
DESIGN ENGINEER OF RECORD:	B.S. COX	DATE:	3-18

REVISIONS						SHEET NO.
NO.	BY:	DATE:	NO.	BY:	DATE:	S-19
1			3			TOTAL SHEETS
2			4			19

DocuSign Envelope ID: 96A2AB8B-1CC7-460E-BC8D-E3B3DB7C39B9

3/20/2018 11:28:14 AM G:\Projects\2015\Division 7 (Hatch Mott)\17BP7R90 (Guilford 210) (105 33BBU 2BMR)\Structures\Drawings\Final(revised)\401_17BP7R90_SMU_SN.dgn

STANDARD NOTES

DESIGN DATA:

SPECIFICATIONS	A.A.S.H.T.O. (CURRENT)
LIVE LOAD	SEE PLANS
IMPACT ALLOWANCE	SEE A.A.S.H.T.O.
STRESS IN EXTREME FIBER OF	
STRUCTURAL STEEL - AASHTO M270 GRADE 36	20,000 LBS. PER SQ. IN.
- AASHTO M270 GRADE 50W	27,000 LBS. PER SQ. IN.
- AASHTO M270 GRADE 50	27,000 LBS. PER SQ. IN.
REINFORCING STEEL IN TENSION	
GRADE 60	24,000 LBS. PER SQ. IN.
CONCRETE IN COMPRESSION	1,200 LBS. PER SQ. IN.
CONCRETE IN SHEAR	SEE A.A.S.H.T.O.
STRUCTURAL TIMBER - TREATED OR	
UNTREATED - EXTREME FIBER STRESS	1,800 LBS. PER SQ. IN.
COMPRESSION PERPENDICULAR TO GRAIN OF TIMBER	375 LBS. PER SQ. IN.
EQUIVALENT FLUID PRESSURE OF EARTH	30 LBS. PER CU. FT. (MINIMUM)

MATERIAL AND WORKMANSHIP:

EXCEPT AS MAY OTHERWISE BE SPECIFIED ON PLANS OR IN THE SPECIAL PROVISIONS, ALL MATERIAL AND WORKMANSHIP SHALL BE IN ACCORDANCE WITH THE 2018 "STANDARD SPECIFICATIONS FOR ROADS AND STRUCTURES" OF THE N. C. DEPARTMENT OF TRANSPORTATION.

STEEL SHEET PILING FOR PERMANENT OR TEMPORARY APPLICATIONS SHALL BE HOT ROLLED.

CONCRETE:

UNLESS OTHERWISE REQUIRED ON PLANS, CLASS A CONCRETE SHALL BE USED FOR ALL PORTIONS OF ALL STRUCTURES WITH THE EXCEPTION THAT: CLASS AA CONCRETE SHALL BE USED IN BRIDGE SUPERSTRUCTURES, ABUTMENT BACKWALLS, AND APPROACH SLABS; AND CLASS B CONCRETE SHALL BE USED FOR SLOPE PROTECTION AND RIP RAP.

CONCRETE CHAMFERS:

UNLESS OTHERWISE NOTED ON THE PLANS, ALL EXPOSED CORNERS ON STRUCTURES SHALL BE CHAMFERED 3/4" WITH THE FOLLOWING EXCEPTIONS: TOP CORNERS OF CURBS MAY BE ROUNDED TO 1-1/2" RADIUS WHICH IS BUILT INTO CURB FORMS; CORNERS OF TRANSVERSE FLOOR EXPANSION JOINTS SHALL BE ROUNDED WITH A 1/4" FINISHING TOOL UNLESS OTHERWISE REQUIRED ON PLANS; AND CORNERS OF EXPANSION JOINTS IN THE ROADWAY FACES AND TOPS OF CURBS AND SIDEWALKS SHALL BE ROUNDED TO A 1/4" RADIUS WITH A FINISHING STONE OR TOOL UNLESS OTHERWISE REQUIRED ON PLANS.

DOWELS:

DOWELS WHEN INDICATED ON PLANS AS FOR CULVERT EXTENSIONS, SHALL BE EMBEDDED AT LEAST 12" INTO THE OLD CONCRETE AND GROUTED INTO PLACE WITH 1:2 CEMENT MORTAR.

ALLOWANCE FOR DEAD LOAD DEFLECTION, SETTLEMENT: ETC. IN CASTING SUPERSTRUCTURES:

BRIDGES SHALL BE BUILT ON THE GRADE OR VERTICAL CURVE SHOWN ON PLANS. SLABS, CURBS AND PARAPETS SHALL CONFORM TO THE GRADE OR CURVE.

ALL DIMENSIONS WHICH ARE GIVEN IN SECTION AND ARE AFFECTED BY DEAD LOAD DEFLECTIONS ARE DIMENSIONS AT CENTER LINE OF BEARING UNLESS OTHERWISE NOTED ON PLANS. IN SETTING FORMS FOR STEEL BEAM BRIDGES AND PRESTRESSED CONCRETE GIRDER BRIDGES, ADJUSTMENTS SHALL BE MADE DUE TO THE DEAD LOAD DEFLECTIONS FOR THE ELEVATIONS SHOWN. WHERE BLOCKS ARE SHOWN OVER BEAMS FOR BUILDING UP TO THE SLAB, THE VERTICAL DIMENSIONS OF THE BLOCKS SHALL BE ADJUSTED BETWEEN BEARINGS TO COMPENSATE FOR DEAD LOAD DEFLECTIONS, VERTICAL CURVE ORDINATE, AND ACTUAL BEAM CAMBER. WHERE BOTTOM OF SLAB IS IN LINE WITH BOTTOM OF TOP FLANGES, DEPTH OF SLAB BETWEEN BEARINGS SHALL BE ADJUSTED TO COMPENSATE FOR DEAD LOAD DEFLECTION, VERTICAL CURVE ORDINATE, AND ACTUAL BEAM CAMBER.

IN SETTING FALSEWORK AND FORMS FOR REINFORCED CONCRETE SPANS, AN ALLOWANCE SHALL BE MADE FOR DEAD LOAD DEFLECTIONS, SETTLEMENT OF FALSEWORK, AND PERMANENT CAMBER WHICH SHALL BE PROVIDED FOR IN ADDITION TO THE ELEVATIONS SHOWN. AFTER REMOVAL OF THE FALSEWORK, THE FINISHED STRUCTURES SHALL CONFORM TO THE PROFILE AND ELEVATIONS SHOWN ON THE PLANS AND CONSTRUCTION ELEVATIONS FURNISHED BY THE ENGINEER.

DETAILED DRAWINGS FOR FALSEWORK OR FORMS FOR BRIDGE SUPERSTRUCTURE AND ANY STRUCTURE OR PARTS OF A STRUCTURE AS NOTED ON THE PLANS SHALL BE SUBMITTED TO THE ENGINEER FOR APPROVAL BEFORE CONSTRUCTION OF THE FALSEWORK OR FORMS IS STARTED.

REINFORCING STEEL:

ALL REINFORCING STEEL SHALL BE DEFORMED. DIMENSIONS RELATIVE TO PLACEMENT OF REINFORCING ARE TO CENTERS OF BARS UNLESS OTHERWISE INDICATED IN THE PLANS. DIMENSIONS ON BAR DETAILS ARE TO CENTERS OF BARS OR ARE OUT TO OUT AS INDICATED ON PLANS.

WIRE BAR SUPPORTS SHALL BE PROVIDED FOR REINFORCING STEEL WHERE INDICATED ON THE PLANS. WHEN BAR SUPPORT PIECES ARE PLACED IN CONTINUOUS LINES, THEY SHALL BE SO PLACED THAT THE ENDS OF THE SUPPORTING WIRES SHALL BE LAPPED TO LOCK LEGS ON ADJOINING PIECES.

STRUCTURAL STEEL:

AT THE CONTRACTOR'S OPTION, HE MAY SUBSTITUTE 7/8" Ø SHEAR STUDS FOR THE 3/4" Ø STUDS SPECIFIED ON THE PLANS. THIS SUBSTITUTION SHALL BE MADE AT THE RATE OF 3 - 7/8" Ø STUDS FOR 4 - 3/4" Ø STUDS, AND STUD SPACING CHANGES SHALL BE MADE AS NECESSARY TO PROVIDE THE SAME EQUIVALENT NUMBER OF 7/8" Ø STUDS ALONG THE BEAM AS SHOWN FOR 3/4" Ø STUDS BASED ON THE RATIO OF 3 - 7/8" Ø STUDS FOR 4 - 3/4" Ø STUDS. STUDS OF THE LENGTH SPECIFIED ON THE PLANS MUST BE PROVIDED. THE MAXIMUM SPACING SHALL BE 2'-0".

EXCEPT AT THE INTERIOR SUPPORTS OF CONTINUOUS BEAMS WHERE THE COVER PLATE IS IN CONTACT WITH BEARING PLATE, THE CONTRACTOR MAY, AT HIS OPTION, SUBSTITUTE FOR THE COVER PLATES DESIGNATED ON THE PLANS COVER PLATES OF THE EQUIVALENT AREA PROVIDED THESE PLATES ARE AT LEAST 5/16" IN THICKNESS AND DO NOT EXCEED A WIDTH EQUAL TO THE FLANGE WIDTH LESS 2" OR A THICKNESS EQUAL TO 2 TIMES THE FLANGE THICKNESS. THE SIZE OF FILLET WELDS SHALL CONFORM TO THE REQUIREMENTS OF THE CURRENT ANSI/AASHTO/AWS "BRIDGE WELDING CODE". ELECTROSLAG WELDING WILL NOT BE PERMITTED.

WITH THE SOLE EXCEPTION OF EDGES AT SURFACES WHICH BEAR ON OTHER SURFACES, ALL SHARP EDGES AND ENDS OF SHAPES AND PLATES SHALL BE SLIGHTLY ROUNDED BY SUITABLE MEANS TO A RADIUS OF APPROXIMATELY 1/16 INCH OR EQUIVALENT FLAT SURFACE AT A SUITABLE ANGLE PRIOR TO PAINTING, GALVANIZING, OR METALLIZING.

HANDRAILS AND POSTS:

METAL STANDARDS AND FACES OF THE CONCRETE END POSTS FOR THE METAL RAIL SHALL BE SET NORMAL TO THE GRADE OF THE CURB, UNLESS OTHERWISE SHOWN ON PLANS. THE METAL RAIL AND TOPS OF CONCRETE POSTS USED WITH THE ALUMINUM RAIL SHALL BE BUILT PARALLEL TO THE GRADE OF THE CURB.

METAL HANDRAILS SHALL BE IN ACCORDANCE WITH THE PLANS. RAILS SHALL BE AS MANUFACTURED FOR BRIDGE RAILING. CASTINGS SHALL BE OF A UNIFORM APPEARANCE. FINS AND OTHER DEFORMATIONS RESULTING FROM CASTING OR OTHERWISE SHALL BE REMOVED IN A MANNER SO THAT A UNIFORM COLORING OF THE COMPLETED CASTING SHALL BE OBTAINED. CASTINGS WITH DISCOLORATIONS OR OF NON-UNIFORM COLORING WILL NOT BE ACCEPTED. CERTIFIED MILL REPORTS ARE REQUIRED FOR METAL RAILS AND POSTS.

SPECIAL NOTES:

GENERALLY, IN CASE OF DISCREPANCY, THIS STANDARD SHEET OF NOTES SHALL GOVERN OVER THE SPECIFICATIONS, BUT THE REMAINDER OF THE PLANS SHALL GOVERN OVER NOTES HEREON, AND SPECIAL PROVISIONS SHALL GOVERN OVER ALL. SEE SPECIFICATIONS ARTICLE 105-4.

ENGLISH

JANUARY, 1990