PROJECT REFERENCE NO.	SHEET NO.
44917.3.5	1

TAP – 0708(085)
R–5787D

2017 CR CONTRACT – ROCKINGHAM COUNTY
REIDSVILLE
(INSETS 1,2,4 & 6)

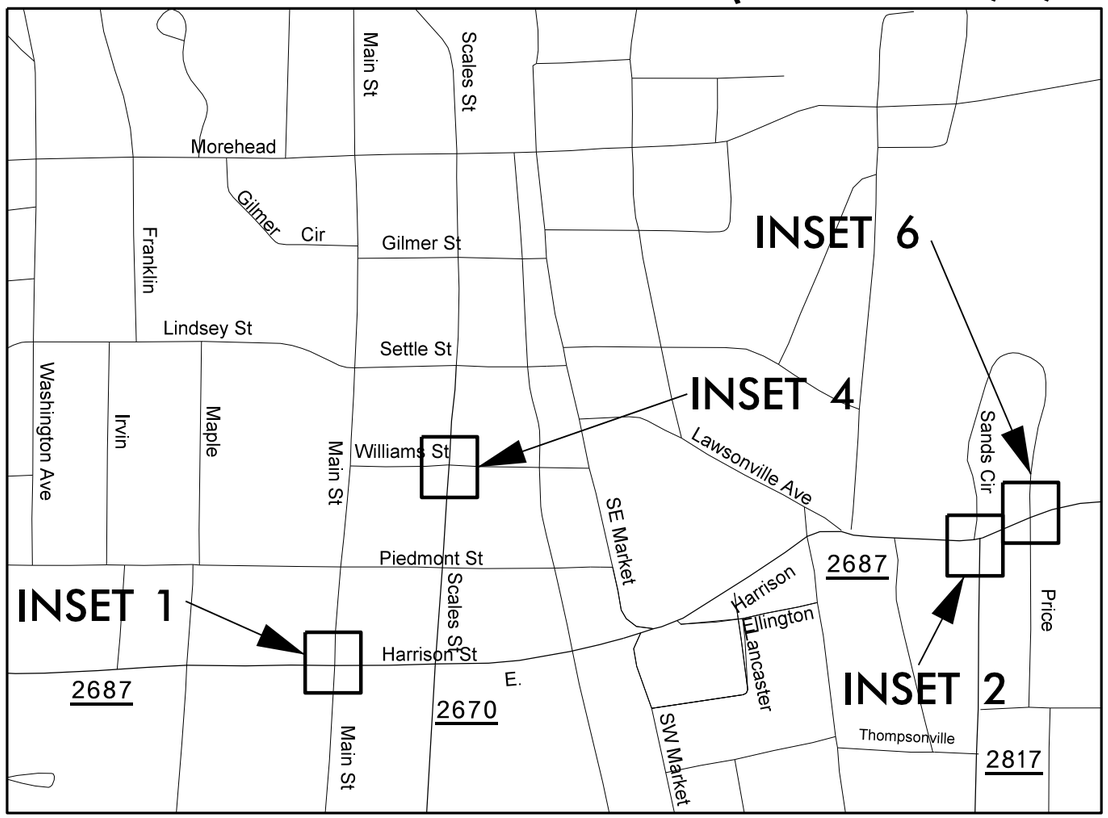

INSET 1

SR 2687 (HARRISON STREET)
@ MAIN STREET (NON–SYSTEM)
INT ID.# C036

REPLACE CR'S IN
QUADRANTS 1, 2, 3, 4

INSET 2

SR 2687 (LAWSONVILLE ST)
@ SANDS CIRCLE
(NON–SYSTEM)
/SR 2817 (BARNES ST)
INT. ID# C020

REPLACE CR'S IN
QUADRANTS 1, 2, 3, 4

INSET 4

SCALES STREET @
WILLIAMS STREET
(NON–SYSTEM)
INT. ID.# C010

REPLACE CR'S IN
QUADRANTS 1, 2, 3, 4

INSET 6

SR 2687
(LAWSONVILLE AVE)
@ SANDS CIRLE
(NON–SYSTEM)
/PRICE STREET (NON–SYSTEM)
INT. ID# C031

REPLACE CR'S IN
QUADRANTS 1, 2, 3, 4

5/14/99
05-JUN-2017 13:52
S:\DOC\Divisions\Roadway\R-5787_TAP_Div7_2016\Roadway\Proj\District 3\CONTRACT 1 R5787D\WCR_VICINTY_ROCKINGHAM_Reidsville_PSH1.dgn

PROJECT REFERENCE NO.	SHEET NO.
44917.3.5	2

R-5787D

2017 CR CONTRACT – ROCKINGHAM COUNTY
EDEN
(INSETS 3 & 5)

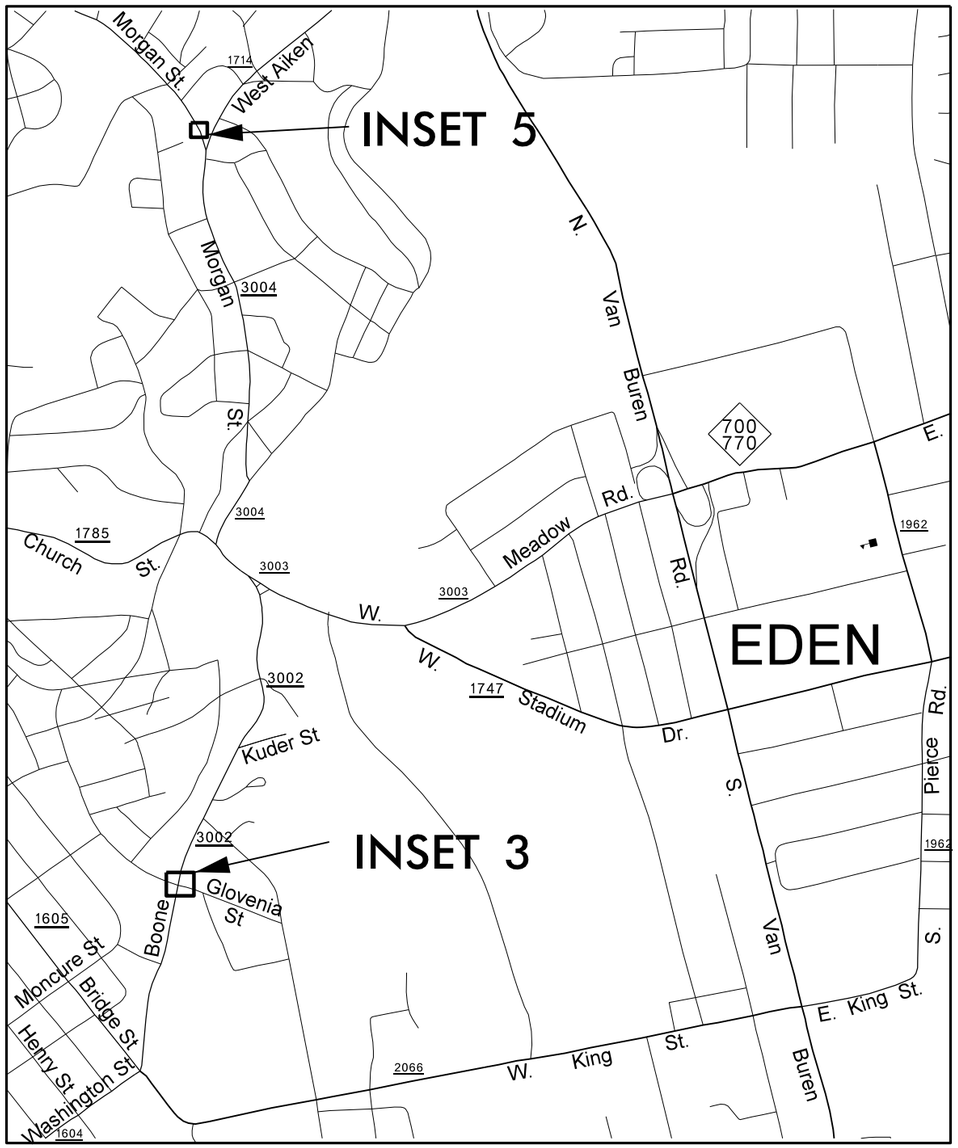

INSET 3

SR 3002 (BOONE ROAD)
@ GLOVENIA STREET
(NON-SYSTEM)
INT. ID# C080

REPLACE CR'S IN
QUADRANTS 1, 2, 3

INSET 5

SR 3004 (MORGAN ROAD)
@ SR 1714 (AIKEN ROAD)
INT. ID# C088

REPLACE CR IN
QUADRANT 3

5/14/99
05-JUN-2017 13:53
S:\DOT\Roadway\R-5787_TAP_Div7_2016\Roadway\Proj\District 3\CONTRACT 1 R5787D\WCR_VICINTY_ROCKINGHAM_Eden_PSH2.dgn

PROJECT REFERENCE NO.	SHEET NO.
R-5787D (44917.3.5)	3

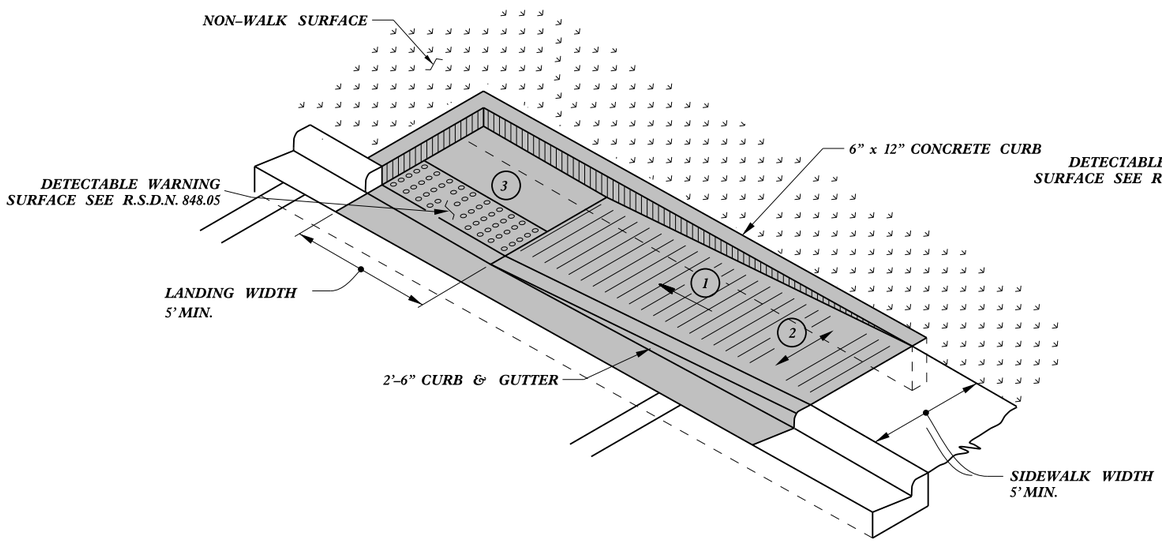

TYPE 1A

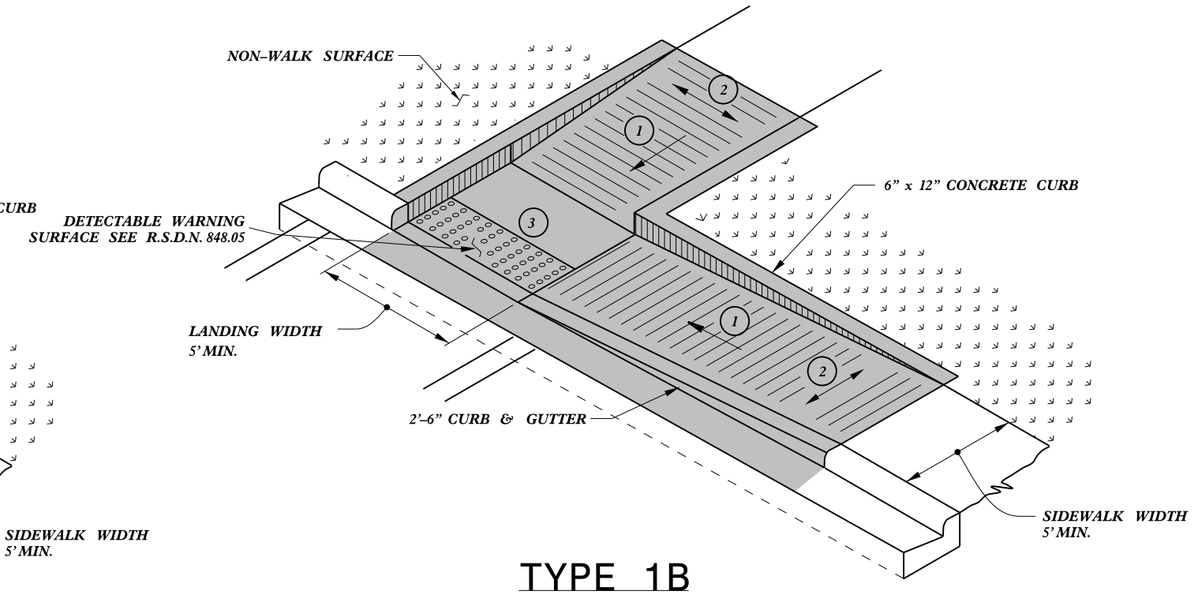

TYPE 1B

PAY LIMITS FOR 1 CURB RAMP

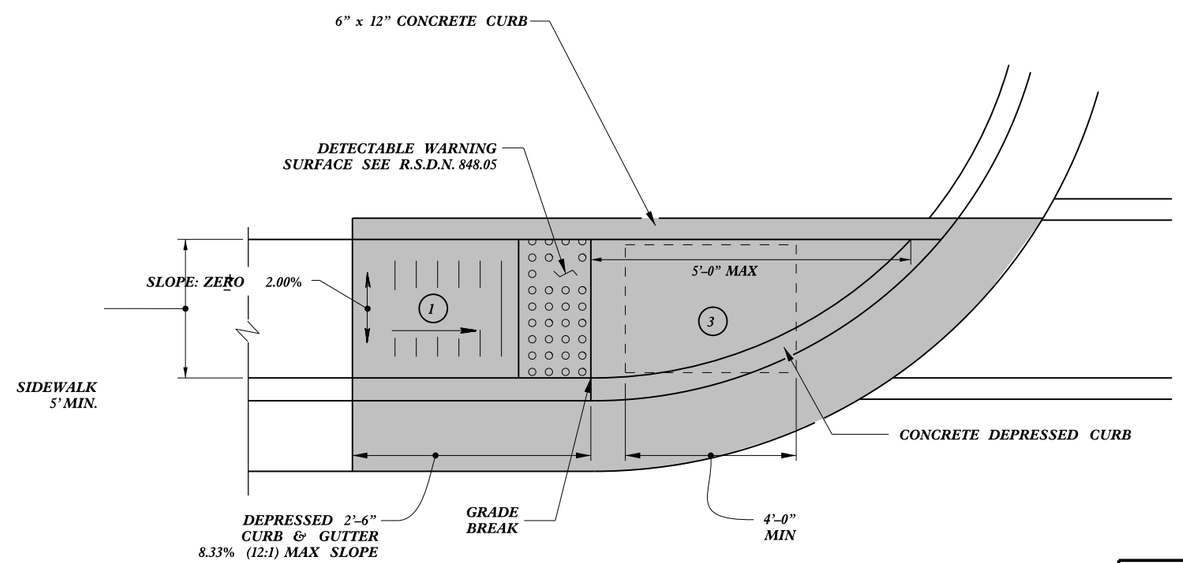

TYPE 1

1. 8.33% (12:1) MAX RAMP SLOPE
2. CROSS SLOPE: 2.00%
3. CURB RAMPS REQUIRE A (4'-0") MINIMUM LANDING WITH A MAXIMUM CROSS SLOPE AND LONGITUDINAL SLOPE OF 2.00% WHERE PEDESTRIANS PERFORM TURNING MANEUVERS. SLOPE TO DRAIN TO CURB.

REFER TO ROADWAY STANDARD DRAWING NUMBER 848.05 SHEET 3 OF 3 FOR ALL RAMP NOTES

NORTH CAROLINA PROFESSIONAL SEAL 022966 ENGINEER

DocuSigned by:
873E3D47DCDC45F...
6/7/2017

CONTRACT STANDARDS AND DEVELOPMENT UNIT
Office 919-707-6950 FAX 919-250-4119

CURB RAMPS

Directional Ramps

ORIGINAL BY: J.S. HOWERTON DATE: 7/7/11
MODIFIED BY: DATE:
CHECKED BY: DATE:
FILE SPEC.: stds/2012CurbRamp/CurbRampDetails.dgn

5/14/99

$$$$SYSTIME$$$$
$$$$USERNAME$$$$

PROJECT REFERENCE NO.	SHEET NO.
R-5787D (44917.3.5)	4

PAY LIMITS FOR 1 CURB RAMP

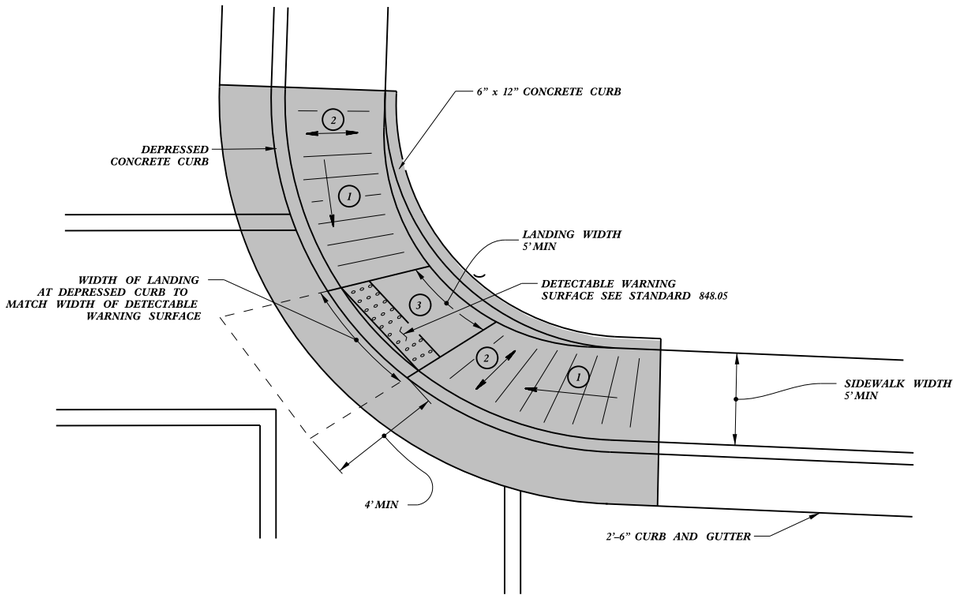

TYPE 2B

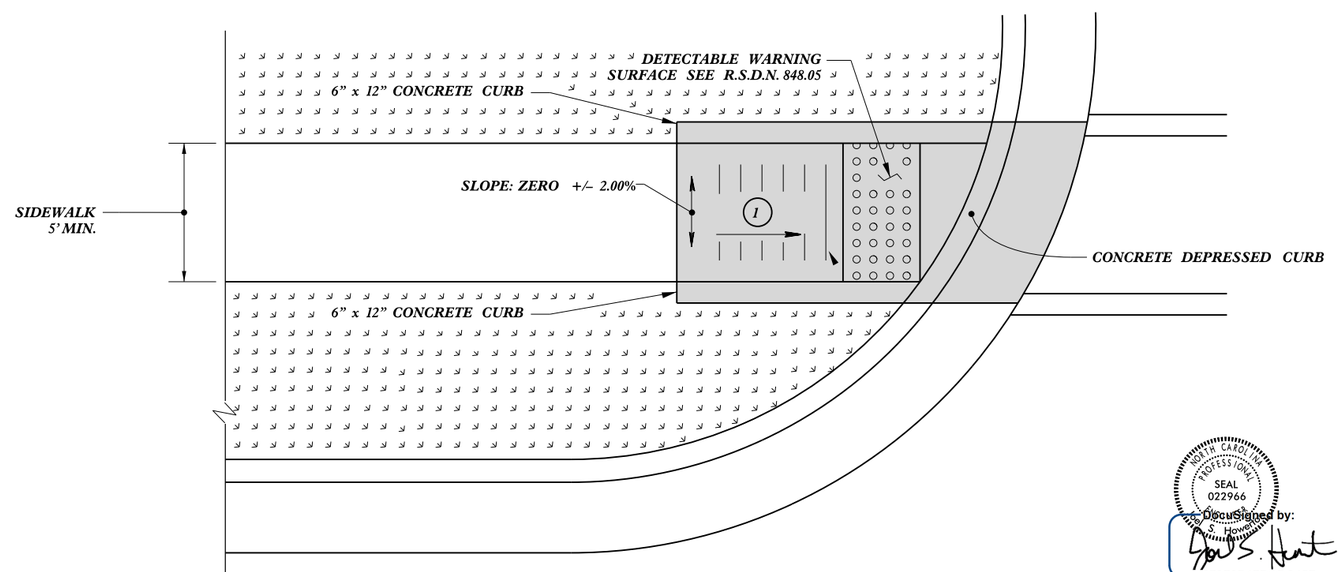

TYPE 1 Modified

1. 8.33% (12:1) MAX RAMP SLOPE
2. CROSS SLOPE: 2.00%
3. CURB RAMPS REQUIRE A (4'-0") MINIMUM LANDING WITH A MAXIMUM CROSS SLOPE AND LONGITUDINAL SLOPE OF 2.00% WHERE PEDESTRIANS PERFORM TURNING MANEUVERS. SLOPE TO DRAIN TO CURB.

REFER TO ROADWAY STANDARD DRAWING NUMBER 848.05 SHEET 3 OF 3 FOR ALL RAMP NOTES

NORTH CAROLINA PROFESSIONAL SEAL 022966 ENGINEER J. S. HOWERTON

DocuSigned by:
J. S. Howerton
873E3D47DCDC45F...
6/7/2017

CONTRACT STANDARDS AND DEVELOPMENT UNIT
Office 919-707-6950 FAX 919-250-4119

CURB RAMPS

Directional Ramps

ORIGINAL BY: J.S. HOWERTON DATE: 7/7/11
MODIFIED BY: DATE:
CHECKED BY: DATE:
FILE SPEC.: stds/2012CurbRamp/CurbRampDetails.dgn

5/14/99

$$$$SYSTIME$$$$
$$$$USERNAME$$$$

PROJECT REFERENCE NO.	SHEET NO.
R-5787D (44917.3.5)	5

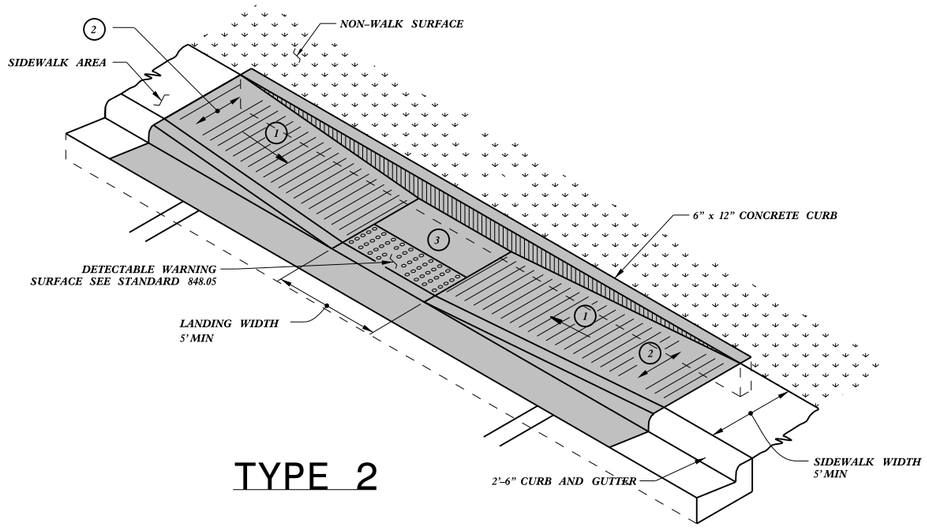

TYPE 2

PAY LIMITS FOR 1 CURB RAMP

1. 8.33% (12:1) MAX RAMP SLOPE
2. CROSS SLOPE: 2.00%
3. CURB RAMPS REQUIRE A (4'-0") MINIMUM LANDING WITH A MAXIMUM CROSS SLOPE AND LONGITUDINAL SLOPE OF 2.00% WHERE PEDESTRIANS PERFORM TURNING MANEUVERS. SLOPE TO DRAIN TO CURB.

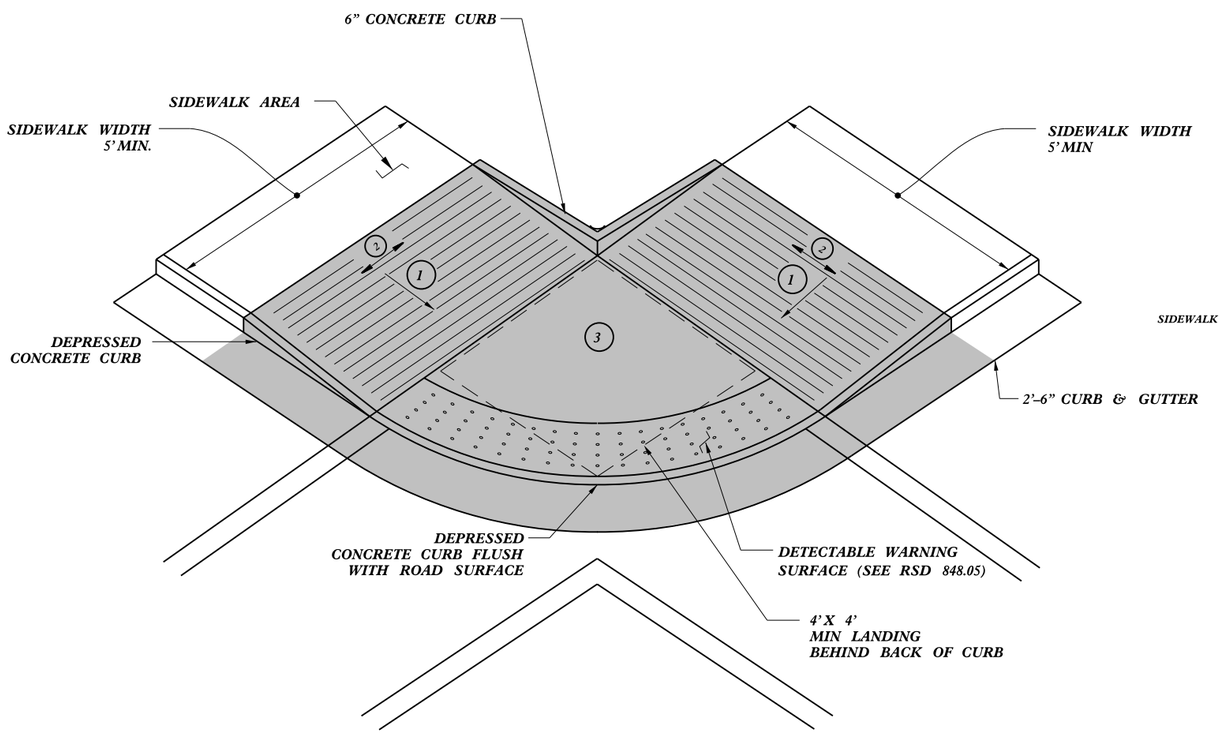

TYPE 2A

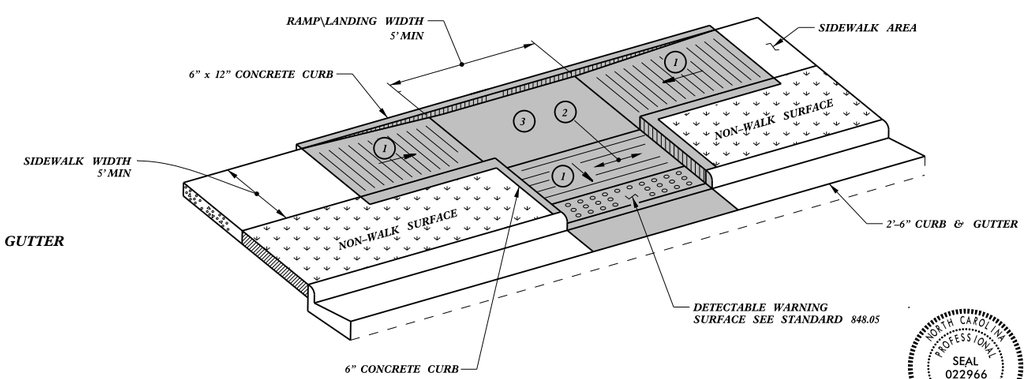

TYPE 3

NORTH CAROLINA PROFESSIONAL SEAL 022966 ENGINEER Joel S. Howerton

DocuSigned by:
Joel S. Howerton
6/7/2017
976FD917DCDC45F...

CONTRACT STANDARDS AND DEVELOPMENT UNIT
Office 919-707-6950 FAX 919-250-4119

CURB RAMPS

Parallel Ramps

ORIGINAL BY: J.S. HOWERTON DATE: 7/7/11
MODIFIED BY: DATE:
CHECKED BY: DATE:
FILE SPEC.: stds/2012CurbRamp/CurbRampDetails.dgn

REFER TO ROADWAY STANDARD DRAWING NUMBER 848.05 SHEET 3 OF 3 FOR ALL RAMP NOTES

5/14/99

$$$$SYSTIME$$$$
$$$$DGNFILE$$$$
$$$$USERNAME$$$$

PROJECT REFERENCE NO.	SHEET NO.
44917.3.5	EC – 1

R-5787D

EROSION CONTROL DETAIL

NOTES: Less than 5' – 10' undisturbed buffer from ROW, ditchline, water feature, or drainage inlet, add BMP.

BMP Options: Wattle or Silt Fence

< 5' – 10' Undisturbed buffer add BMP

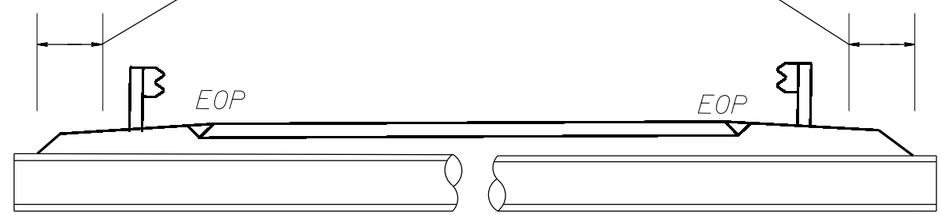

Pipe/Culvert

< 5' – 10' Undisturbed buffer from jurisdictional feature add BMP

< 5' – 10' Undisturbed buffer from ditchline, add BMP

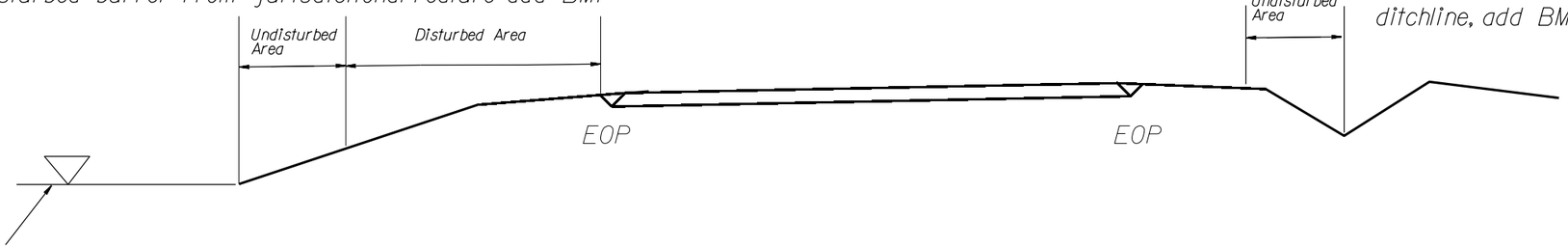

Jurisdictional Feature

Use BMP's if berms, shoulders and/or frontslopes and/or ditchline and/or backslopes are disturbed

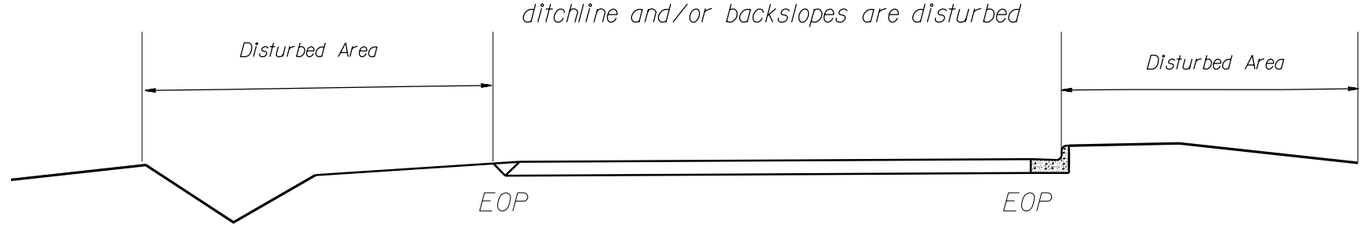

< 5' – 10' Undisturbed buffer from inlet, add wattle

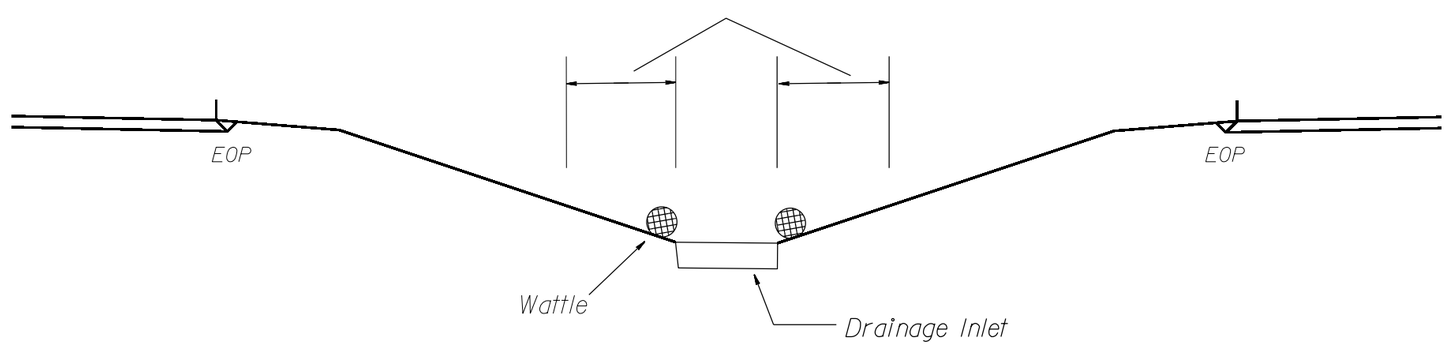

NOT TO SCALE

PROJECT REERENCE NO.	SHEET NO.
44917.3.5	6

ROCKINGHAM COUNTY CURB RAMP LOCATIONS - R-5787D

Inset #	Municipality	Major Route	Minor Route	Int. ID #	GENERIC PAVING ITEM (REMOVE AND REPLACE CONCRETE CURB RAMPS - TYPE 1)	GENERIC PAVING ITEM (REMOVE AND REPLACE CONCRETE CURB RAMPS - TYPE 1 MOD.)	GENERIC PAVING ITEM (REMOVE AND REPLACE CONCRETE CURB RAMPS - TYPE 2)	GENERIC PAVING ITEM (REMOVE AND REPLACE CONCRETE CURB RAMPS - TYPE 2A)	GENERIC PAVING ITEM (REMOVE AND REPLACE CONCRETE CURB RAMPS - TYPE 2B)	GENERIC PAVING ITEM (REMOVE AND REPLACE CONCRETE CURB RAMPS - TYPE 3)	TEMPORARY TRAFFIC CONTROL	TEMPORARY SILT FENCE	WATTLE	SEEDING AND MULCHING
1	Reidsville	Main Street	Harrison Street (non-system)	C036							1	25	36	0.01
			Quadrant 1				2							
			Quadrant 2				2							
			Quadrant 3				2							
			Quadrant 4				2							
			Total Inset 1		0	0	8	0	0	0	1	25	36	0.01
2	Reidsville	SR 2687 (Lawsonville Ave)	Sands Circle (non-system)/SR 2817 (Barnes St)	C020							1	25	12	0.02
			Quadrant 1		1					1				
			Quadrant 2				2							
			Quadrant 3				1							
			Quadrant 4			1								
			Total Inset 2		1	1	3	0	0	1	1	25	12	0.02
3	Eden	SR 3002 (Boone Road)	Glovenia Street (non-system)	C080							1	25	12	0.02
			Quadrant 1					1						
			Quadrant 2					1						
			Quadrant 3					1						
			Total Inset 3		0	0	0	3	0	0	1	25	12	0.02
4	Reidsville	Scales Street	Williams Street	C010							1	25	12	0.02
			Quadrant 1					1						
			Quadrant 2			1								
			Quadrant 3						1					
			Quadrant 4					1						
			Total Inset 4		0	1	0	2	1	0	1	25	12	0.02
5	Eden	SR 3004 (Morgan Road)	SR 1714 (Aiken Road)	C088							1			
			Quadrant 3				1							
			Total Inset 5		0	0	1	0	0	0	1	0	0	0
6	Reidsville	SR 2687 (Lawsonville Ave)	Price Street (non-system)/Sands Circle (non-system)	C031							1	25	12	0.02
			Quadrant 1			1								
			Quadrant 2			1								
			Quadrant 3		1									
			Quadrant 4		1									
			Total Inset 6		2	2	0	0	0	0	1	25	12	0.02
			GRAND TOTALS		**3**	**4**	**12**	**5**	**1**	**1**	**6**	**125**	**84**	**0.09**

DIVISION OF HIGHWAYS
STATE OF NORTH CAROLINA

SOIL STABILIZATION TIMEFRAMES

SITE DESCRIPTION	STABILIZATION TIME	TIMEFRAME EXCEPTIONS
PERIMETER DIKES, SWALES, DITCHES AND SLOPES	7 DAYS	NONE
HIGH QUALITY WATER (HQW) ZONES	7 DAYS	NONE
SLOPES STEEPER THAN 3:1	7 DAYS	IF SLOPES ARE 10′ OR LESS IN LENGTH AND ARE NOT STEEPER THAN 2:1, 14 DAYS ARE ALLOWED.
SLOPES 3:1 OR FLATTER	14 DAYS	7 DAYS FOR SLOPES GREATER THAN 50′ IN LENGTH.
ALL OTHER AREAS WITH SLOPES FLATTER THAN 4:1	14 DAYS	NONE, EXCEPT FOR PERIMETERS AND HQW ZONES.

THESE EROSION AND SEDIMENT CONTROL PLANS COMPLY
WITH THE REGULATIONS SET FORTH BY THE
NCG–010000 GENERAL CONSTRUCTION PERMIT EFFECTIVE AUGUST 3, 2011
ISSUED BY THE NORTH CAROLINA DEPARTMENT OF ENVIRONMENT AND
NATURAL RESOURCES DIVISION OF WATER QUALITY.

PROJECT REFERENCE NO.	SHEET NO.
44917.3.5	EC – 3

R–5787D

REINFORCED TEMPORARY SILT FENCE DETAIL

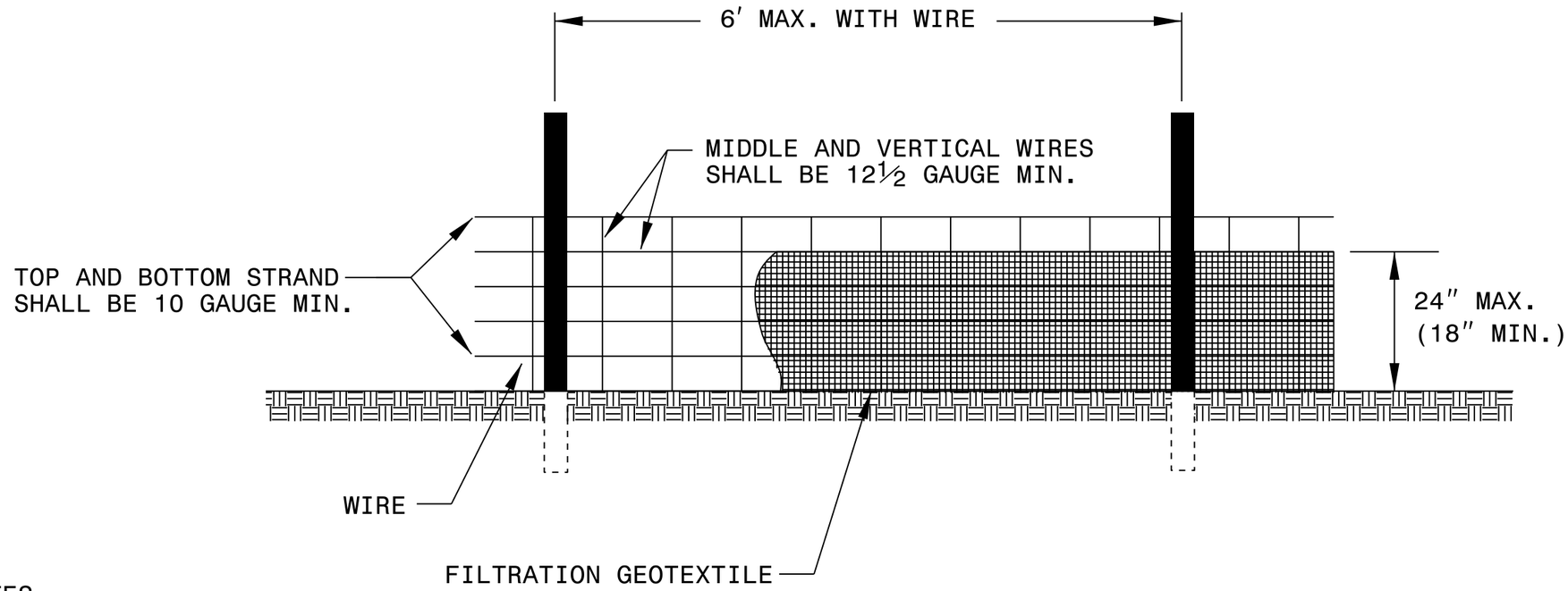

NOTES

USE FILTRATION GEOTEXTILE A MINIMUM OF 36″ IN WIDTH AND FASTEN ADEQUATELY TO THE POSTS AND WIRE AS DIRECTED.

USE WIRE A MINIMUM OF 32″ IN WIDTH AND WITH A MINIMUM OF 6 LINE WIRES WITH 12″ STAY SPACING.

PROVIDE 5′-0″ STEEL POST OF THE SELF-FASTENER ANGLE STEEL TYPE.

FOR MECHANICAL SLICING METHOD INSTALLATION, GEOTEXTILE SHALL BE A MAXIMUM OF 18″ ABOVE GROUND SURFACE.

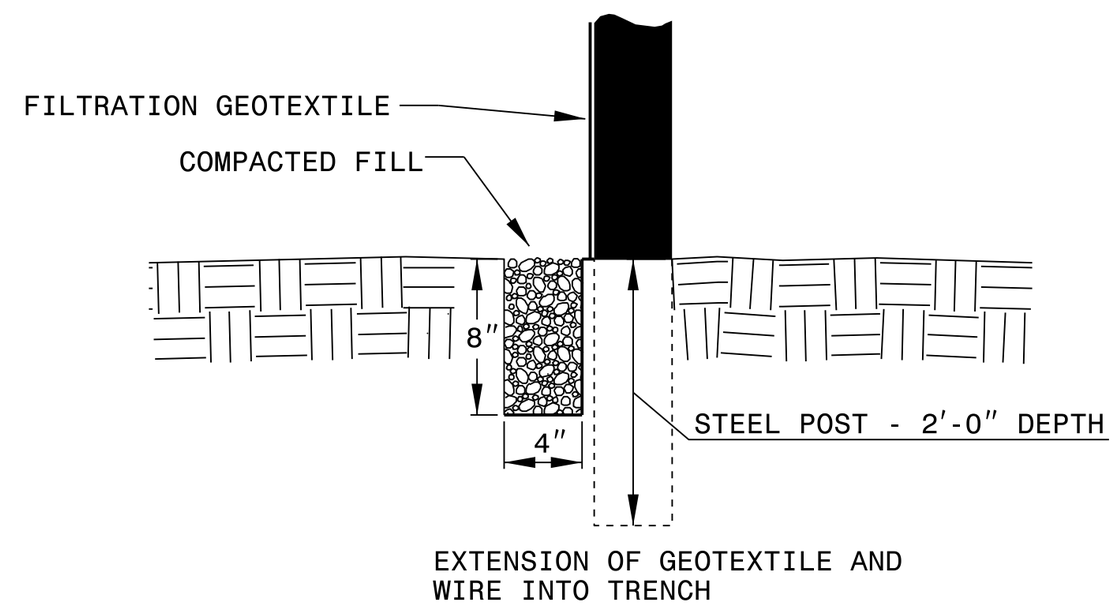

PROJECT REFERENCE NO.	SHEET NO.
44917.3.5	EC – 4

R–5787D

WATTLE DETAIL

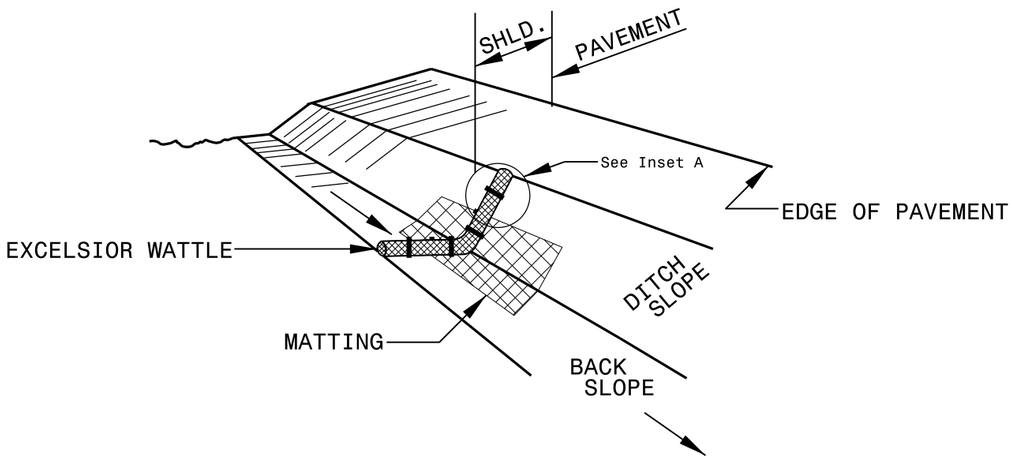

ISOMETRIC VIEW

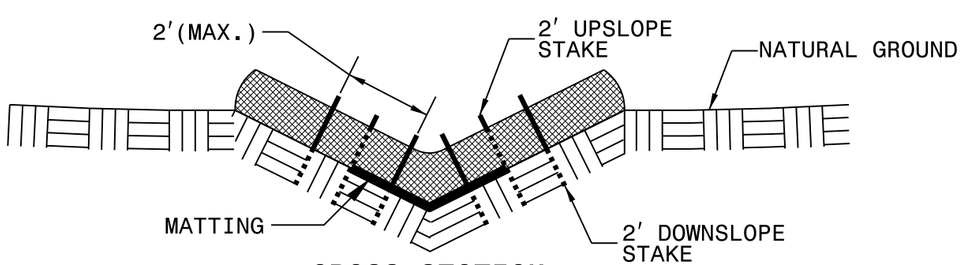

CROSS SECTION VEE DITCH

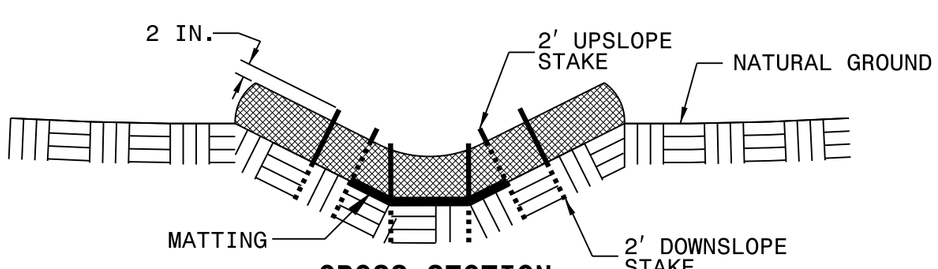

CROSS SECTION TRAPEZOIDAL DITCH

NOTES:

USE MINIMUM 12 IN. DIAMETER EXCELSIOR WATTLE.

USE 2 FT. WOODEN STAKES WITH A 2 IN. BY 2 IN. NOMINAL CROSS SECTION.

<u>ONLY</u> INSTALL WATTLE(S) TO A HEIGHT IN DITCH SO FLOW WILL NOT WASH AROUND WATTLE AND SCOUR DITCH SLOPES AND AS DIRECTED.

INSTALL A MINIMUM OF 2 UPSLOPE STAKES AND 4 DOWNSLOPE STAKES AT AN ANGLE TO WEDGE WATTLE TO BOTTOM OF DITCH.

PROVIDE STAPLES MADE OF 0.125 IN. DIAMETER STEEL WIRE FORMED INTO A U SHAPE NOT LESS THAN 12″ IN LENGTH.

INSTALL STAPLES APPROXIMATELY EVERY 1 LINEAR FOOT ON BOTH SIDES OF WATTLE AND AT EACH END TO SECURE IT TO THE SOIL.

INSTALL MATTING IN ACCORDANCE WITH SECTION 1631 OF THE STANDARD SPECIFICATIONS.

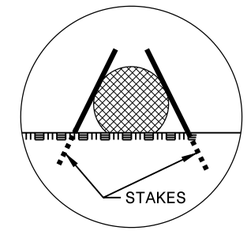

INSET A

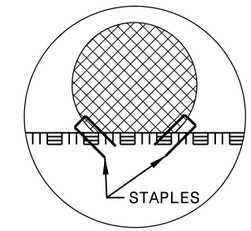

INSET B

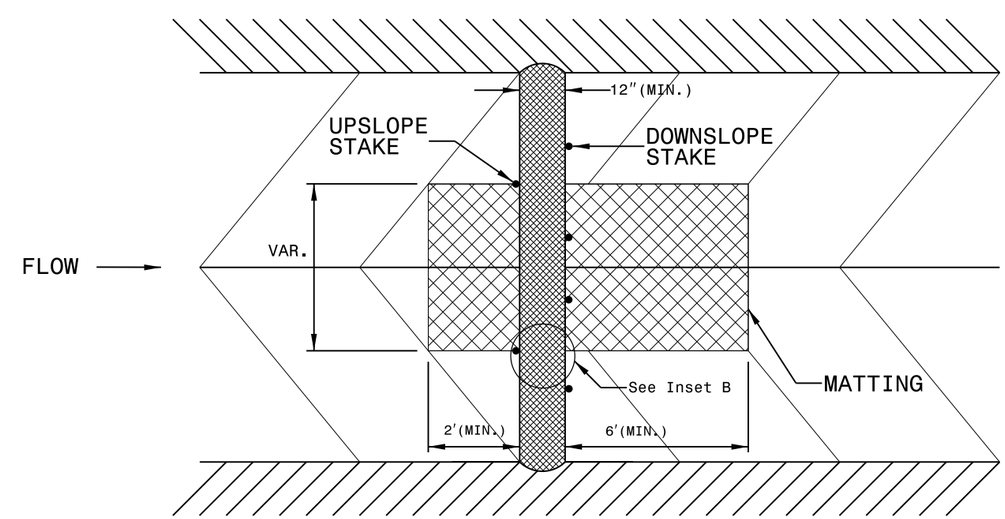

TOP VIEW