This electronic collection of documents is provided for the convenience of the user and is Not a Certified Document –

The documents contained herein were originally issued and sealed by the individuals whose names and license numbers appear on each page, on the dates appearing with their signature on that page.
This file or an individual page shall not be considered a certified document.

DocuSign Envelope ID: F09959B3-A862-4B56-9346-6E2EE751E284

TIP PROJECT: B-5726

CONTRACT:

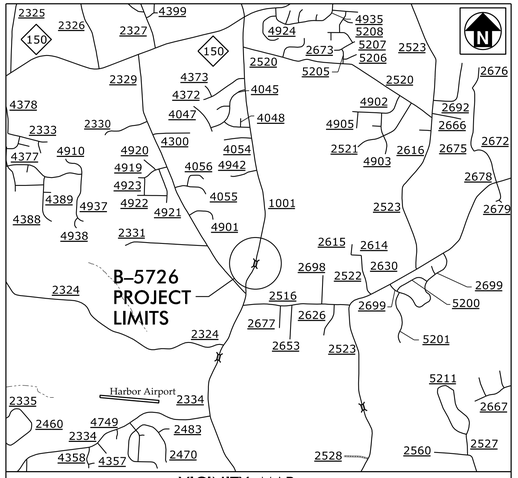

VICINITY MAP
(NOT TO SCALE)

STATE OF NORTH CAROLINA
DIVISION OF HIGHWAYS

GUILFORD COUNTY

LOCATION: BRIDGE NO. 135 OVER SQUIRREL CREEK ON SR 1001 (NORTH CHURCH STREET)

TYPE OF WORK: GRADING, PAVING, DRAINAGE AND CULVERT

STATE	STATE PROJECT REFERENCE NO.	SHEET NO.	TOTAL SHEETS
N.C.	B-5726	1	

STATE PROJECT NO.	F.A. PROJ. NO.	DESCRIPTION
45682.1.1		PE
45682.2.1		RW
45682.3.1		CONST

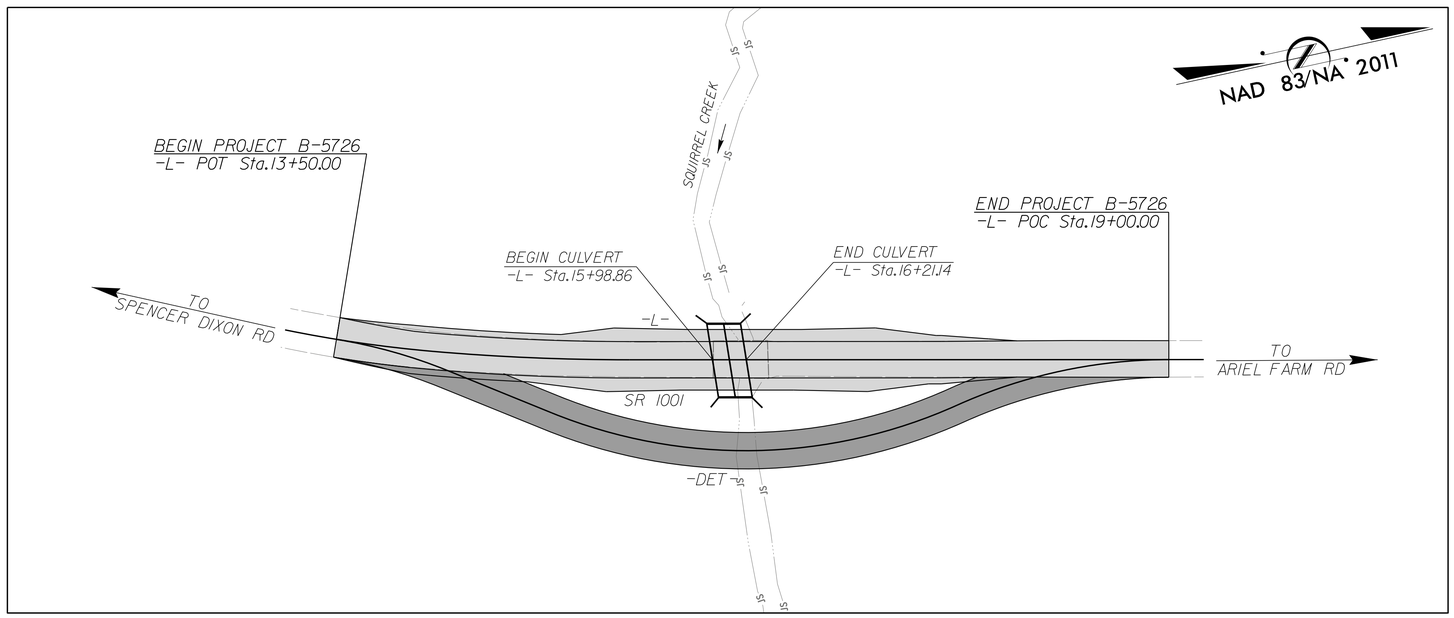

*DESIGN EXCEPTION:
SAG VERTICAL CURVE K
VERTICAL SSD

DOCUMENT NOT CONSIDERED FINAL
UNLESS ALL SIGNATURES COMPLETED

STATE OF NORTH CAROLINA DEPARTMENT OF TRANSPORTATION

DESIGN DATA

ADT 2011 = 5,200

ADT 2025 = 10,400

V = 45 MPH

SUB REGIONAL TIER
MAJOR COLLECTOR

PROJECT LENGTH

LENGTH ROADWAY TIP PROJECT = 0.104 MILES

LENGTH STRUCTURE TIP PROJECT = 0.004 MILES

TOTAL LENGTH TIP PROJECT = 0.100 MILES

Prepared In the Office of Mott MacDonald for
DIVISION 7
NORTH CAROLINA DEPARTMENT OF TRANSPORTATION

2018 STANDARD SPECIFICATIONS

LETTING DATE:

TIM JORDAN, PE
PROJECT ENGINEER

DAVID FUH, PE
HYDRAULICS ENGINEER

NCDOT CONTACT: TIM POWERS, PE
DIVISION BRIDGE PROGRAM MANAGER

ROADWAY DESIGN ENGINEER
NORTH CAROLINA PROFESSIONAL SEAL 21102 ENGINEER TIMOTHY JAMES JORDAN
DocuSigned by: James Timothy Jordan 4/26/2018
3A6529B19D27444...
SIGNATURE: P.E.

HYDRAULICS ENGINEER
NORTH CAROLINA PROFESSIONAL SEAL 19732 ENGINEER SHUCHEN FUH
DocuSigned by: Shuchen Fuh 4/27/2018
07CAA877EF8A45D...
SIGNATURE: P.E.

PLANS PREPARED BY:

MOTT MACDONALD
PO Box 700
Fuquay-Varina, NC 27526
(919) 552-2253
(919) 552-2254 (Fax)
www.mottmac.com/americas

LICENSE NO. F-0669

HDR Engineering, Inc. of the Carolinas
555 Fayetteville St, Suite 900 Raleigh, N.C. 27601
N.C.B.E.L.S. License Number: F-0116

4/26/2018
1:30:17 PM
R:\Roadway\Proj\B-5726_rdy_tsh.dgn
jor-6165

DocuSign Envelope ID: F09959B3-A862-4B56-9346-6E2EE751E284

PROJECT REFERENCE	SHEET NO.
B-5726 – GUILFORD 135	1A

ROADWAY DESIGN ENGINEER

NORTH CAROLINA PROFESSIONAL SEAL 21102 ENGINEER TIMOTHY JOHNSON

Digitally signed by Timothy Johnson
4/26/2018

MOTT MACDONALD I & E, LLC
LICENSE NO. F-0669

DOCUMENT NOT CONSIDERED FINAL UNLESS ALL SIGNATURES COMPLETED

Prepared in the Office of:

MOTT MACDONALD
PO Box 700
Fuquay-Varina, NC 27526
www.mottmac.com/americas

GENERAL NOTES: 2018 SPECIFICATIONS

EFFECTIVE: 01-16-2018

GRADE LINE:
GRADING AND SURFACING:

THE GRADE LINES SHOWN DENOTE THE FINISHED ELEVATION OF THE PROPOSED SURFACING AT GRADE POINTS SHOWN ON THE TYPICAL SECTIONS. GRADE LINES MAY BE ADJUSTED AT THEIR BEGINNING AND ENDING AND AT STRUCTURES AS DIRECTED BY THE ENGINEER IN ORDER TO SECURE A PROPER TIE-IN.

CLEARING:

CLEARING ON THIS PROJECT SHALL BE PERFORMED TO THE LIMITS ESTABLISHED BY METHOD II.

SUPERELEVATION:

ALL CURVES ON THIS PROJECT SHALL BE SUPERELEVATED IN ACCORDANCE WITH STD. NO. 225.04 USING THE RATE OF SUPERELEVATION AND RUNOFF SHOWN ON THE PLANS. SUPERELEVATION IS TO BE REVOLVED ABOUT THE GRADE POINTS SHOWN ON THE TYPICAL SECTIONS.

SHOULDER CONSTRUCTION:

ASPHALT, EARTH, AND CONCRETE SHOULDER CONSTRUCTION ON THE HIGH SIDE OF SUPERELEVATED CURVES SHALL BE IN ACCORDANCE WITH STD. NO. 560.01

GUARDRAIL:

THE GUARDRAIL LOCATIONS SHOWN ON THE PLANS MAY BE ADJUSTED DURING CONSTRUCTION AS DIRECTED BY THE ENGINEER. THE CONTRACTOR SHOULD CONSULT WITH THE ENGINEER PRIOR TO ORDERING GUARDRAIL MATERIAL.

SUBSURFACE PLANS:

NO SUBSURFACE PLANS ARE AVAILABLE ON THIS PROJECT. THE CONTRACTOR SHOULD MAKE HIS OWN INVESTIGATION AS TO THE SUBSURFACE CONDITIONS.

UTILITIES:

UTILITY OWNERS ON THIS PROJECT ARE DUKE ENERGY, CHARTER AND AT&T.

ANY RELOCATION OF EXISTING UTILITIES WILL BE ACCOMPLISHED BY OTHERS.

RIGHT-OF-WAY MARKERS:

ALL RIGHT-OF-WAY MARKERS ON THIS PROJECT SHALL BE PLACED BY OTHERS.

INDEX OF SHEETS

SHEET NUMBER	DESCRIPTION
1	TITLE SHEET
1A	INDEX OF SHEETS, GENERAL NOTES, AND LIST OF STANDARD DRAWINGS
1B	CONVENTIONAL SYMBOLS
1C-1	SURVEY CONTROL SHEET
2	PAVEMENT SCHEDULE AND TYPICAL SECTIONS
2A	DETOUR PLAN SHEET AND PROFILE SHEET
2B	GUARDRAIL INSTALLATION DETAIL
3	GUARDRAIL, DRAINAGE & EARTHWORK SUMMARY
4	PLAN SHEET AND PROFILE SHEET
TMP-1 THRU TMP-3	TRAFFIC MANAGEMENT PLANS
EC-1 THRU EC-5	EROSION CONTROL PLANS
RF-1	REFORESTATION PLAN
U0-1	UTILITIES BY OTHERS PLAN
X-1 THRU X-4	CROSS-SECTIONS
C-1 THRU C-6	CULVERT PLANS
CN	CULVERT NOTES

EFF. 01-16-2018

2018 ROADWAY ENGLISH STANDARD DRAWINGS

The following Roadway Standards as appear in "Roadway Standard Drawings" Highway Design Branch – N. C. Department of Transportation – Raleigh, N. C., Dated January, 2018 are applicable to this project and by reference hereby are considered a part of these plans:

STD.NO. TITLE

DIVISION 2 – EARTHWORK
200.02 Method of Clearing – Method II
225.02 Guide for Grading Subgrade – Secondary and Local
225.04 Method of Obtaining Superelevation – Two Lane Pavement

DIVISION 3 – PIPE CULVERTS
300.01 Method of Pipe Installation
310.10 Driveway Pipe Construction

DIVISION 5 – SUBGRADE, BASES AND SHOULDERS
560.01 Method of Shoulder Construction – High Side of Superelevated Curve – Method I

DIVISION 8 – INCIDENTALS
862.01 Guardrail Placement
862.02 Guardrail Installation
876.01 Rip Rap in Channels
876.02 Guide for Rip Rap at Pipe Outlets
876.04 Drainage Ditches with Class 'B' Rip Rap

jor66165
R:\Roadway\Proj\B-5726_rdy_psh1A.dgn
4/26/2018 4:33:42 PM

PROJECT REFERENCE	SHEET NO.
B-5726 – GUILFORD 135	1B

Note: Not to Scale

****S.U.E. = Subsurface Utility Engineering***

STATE OF NORTH CAROLINA
DIVISION OF HIGHWAYS

CONVENTIONAL PLAN SHEET SYMBOLS

BOUNDARIES AND PROPERTY:

- State Line
- County Line
- Township Line
- City Line
- Reservation Line
- Property Line
- Existing Iron Pin — EIP
- Property Corner
- Property Monument — ECM
- Parcel/Sequence Number — 123
- Existing Fence Line
- Proposed Woven Wire Fence
- Proposed Chain Link Fence
- Proposed Barbed Wire Fence
- Existing Wetland Boundary — WLB
- Proposed Wetland Boundary — WLB
- Existing Endangered Animal Boundary — EAB
- Existing Endangered Plant Boundary — EPB
- Known Soil Contamination: Area or Site
- Potential Soil Contamination: Area or Site

BUILDINGS AND OTHER CULTURE:

- Gas Pump Vent or U/G Tank Cap
- Sign — S
- Well — W
- Small Mine
- Foundation
- Area Outline
- Cemetery
- Building
- School
- Church
- Dam

HYDROLOGY:

- Stream or Body of Water
- Hydro, Pool or Reservoir
- Jurisdictional Stream — JS
- Buffer Zone 1 — BZ 1
- Buffer Zone 2 — BZ 2
- Flow Arrow
- Disappearing Stream
- Spring
- Wetland
- Proposed Lateral, Tail, Head Ditch — FLOW
- False Sump

RAILROADS:

- Standard Gauge — CSX TRANSPORTATION
- RR Signal Milepost — MILEPOST 35
- Switch — SWITCH
- RR Abandoned
- RR Dismantled

RIGHT OF WAY:

- Baseline Control Point
- Existing Right of Way Marker
- Existing Right of Way Line
- Proposed Right of Way Line — RW
- Proposed Right of Way Line with Iron Pin and Cap Marker — RW
- Proposed Right of Way Line with Concrete or Granite R/W Marker — RW
- Proposed Control of Access Line with Concrete C/A Marker — CA
- Existing Control of Access — CA
- Proposed Control of Access — CA
- Existing Easement Line — E
- Proposed Temporary Construction Easement — E
- Proposed Temporary Drainage Easement — TDE
- Proposed Permanent Drainage Easement — PDE
- Proposed Permanent Drainage / Utility Easement — DUE
- Proposed Permanent Utility Easement — PUE
- Proposed Temporary Utility Easement — TUE
- Proposed Aerial Utility Easement — AUE
- Proposed Permanent Easement with Iron Pin and Cap Marker

ROADS AND RELATED FEATURES:

- Existing Edge of Pavement
- Existing Curb
- Proposed Slope Stakes Cut — C
- Proposed Slope Stakes Fill — F
- Proposed Curb Ramp — CR
- Existing Metal Guardrail
- Proposed Guardrail
- Existing Cable Guiderail
- Proposed Cable Guiderail
- Equality Symbol
- Pavement Removal

VEGETATION:

- Single Tree
- Single Shrub
- Hedge
- Woods Line
- Orchard
- Vineyard — Vineyard

EXISTING STRUCTURES:

MAJOR:

- Bridge, Tunnel or Box Culvert — CONC
- Bridge Wing Wall, Head Wall and End Wall — CONC WW

MINOR:

- Head and End Wall — CONC HW
- Pipe Culvert
- Footbridge
- Drainage Box: Catch Basin, DI or JB — CB
- Paved Ditch Gutter
- Storm Sewer Manhole — S
- Storm Sewer — S

UTILITIES:

POWER:

- Existing Power Pole
- Proposed Power Pole
- Existing Joint Use Pole
- Proposed Joint Use Pole
- Power Manhole — P
- Power Line Tower
- Power Transformer
- U/G Power Cable Hand Hole
- H-Frame Pole
- Recorded U/G Power Line — P
- Designated U/G Power Line (S.U.E.*) — P

TELEPHONE:

- Existing Telephone Pole
- Proposed Telephone Pole
- Telephone Manhole — T
- Telephone Booth
- Telephone Pedestal — T
- Telephone Cell Tower
- U/G Telephone Cable Hand Hole — HH
- Recorded U/G Telephone Cable — T
- Designated U/G Telephone Cable (S.U.E.*) — T
- Recorded U/G Telephone Conduit — TC
- Designated U/G Telephone Conduit (S.U.E.*) — TC
- Recorded U/G Fiber Optics Cable — T FO
- Designated U/G Fiber Optics Cable (S.U.E.*) — T FO

WATER:

- Water Manhole — W
- Water Meter
- Water Valve
- Water Hydrant
- Recorded U/G Water Line — W
- Designated U/G Water Line (S.U.E.*) — W
- Above Ground Water Line — A/G Water

TV:

- TV Satellite Dish
- TV Pedestal — C
- TV Tower
- U/G TV Cable Hand Hole — HH
- Recorded U/G TV Cable — TV
- Designated U/G TV Cable (S.U.E.*) — TV
- Recorded U/G Fiber Optic Cable — TV FO
- Designated U/G Fiber Optic Cable (S.U.E.*) — TV FO

GAS:

- Gas Valve
- Gas Meter
- Recorded U/G Gas Line — G
- Designated U/G Gas Line (S.U.E.*) — G
- Above Ground Gas Line — A/G Gas

SANITARY SEWER:

- Sanitary Sewer Manhole
- Sanitary Sewer Cleanout
- U/G Sanitary Sewer Line — SS
- Above Ground Sanitary Sewer — A/G Sanitary Sewer
- Recorded SS Forced Main Line — FSS
- Designated SS Forced Main Line (S.U.E.*) — FSS

MISCELLANEOUS:

- Utility Pole
- Utility Pole with Base
- Utility Located Object
- Utility Traffic Signal Box — S
- Utility Unknown U/G Line — ?UTL
- U/G Tank; Water, Gas, Oil
- Underground Storage Tank, Approx. Loc. — UST
- A/G Tank; Water, Gas, Oil
- Geoenvironmental Boring
- U/G Test Hole (S.U.E.*)
- Abandoned According to Utility Records — AATUR
- End of Information — E.O.I.

jor66165
R:\Roadway\Proj\B-5726_rdy_pshlB.dgn
4/26/2018 1:30:22 PM

PROJECT REFERENCE NO.	SHEET NO.
B-5726 – GUILFORD 135	1C-1
Location and Surveys	

B-5726 SURVEY CONTROL SHEET

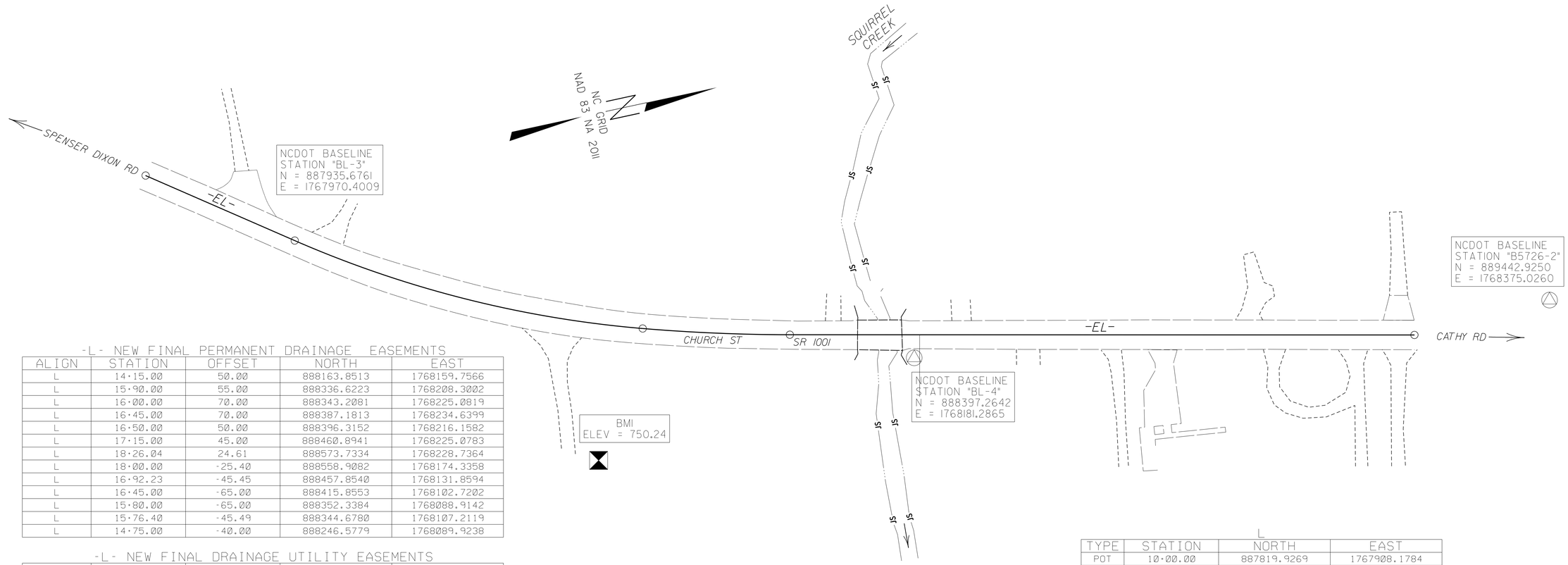

-L- NEW FINAL PERMANENT DRAINAGE EASEMENTS

ALIGN	STATION	OFFSET	NORTH	EAST
L	14+15.00	50.00	888163.8513	1768159.7566
L	15+90.00	55.00	888336.6223	1768208.3002
L	16+00.00	70.00	888343.2081	1768225.0819
L	16+45.00	70.00	888387.1813	1768234.6399
L	16+50.00	50.00	888396.3152	1768216.1582
L	17+15.00	45.00	888460.8941	1768225.0783
L	18+26.04	24.61	888573.7334	1768228.7364
L	18+00.00	-25.40	888558.9082	1768174.3358
L	16+92.23	-45.45	888457.8540	1768131.8594
L	16+45.00	-65.00	888415.8553	1768102.7202
L	15+80.00	-65.00	888352.3384	1768088.9142
L	15+76.40	-45.49	888344.6780	1768107.2119
L	14+75.00	-40.00	888246.5779	1768089.9238

-L- NEW FINAL DRAINAGE UTILITY EASEMENTS

ALIGN	STATION	OFFSET	NORTH	EAST
L	14+75.00	-25.61	888242.8757	1768103.8345
L	14+75.00	-55.00	888250.4358	1768075.4284
L	14+00.00	-50.00	888179.9419	1768059.9332
L	12+00.00	-26.15	887997.1078	1768001.0993
L	12+00.00	-80.00	888025.3746	1767955.2636
L	14+15.00	50.00	888163.8513	1768159.7566
L	13+95.00	50.00	888143.7154	1768153.2743
L	13+95.00	24.03	888151.9640	1768128.6472
L	14+15.00	24.18	888171.4836	1768135.0936

L

TYPE	STATION	NORTH	EAST
POT	10+00.00	887819.9269	1767908.1784
PC	11+38.50	887932.2505	1767989.2111
PCC	14+14.12	888177.7967	1768111.7325
PT	15+44.12	888303.4758	1768144.8112
POT	20+50.00	888797.8069	1768252.2585

NOTES

1. *THE CONTROL DATA FOR THIS PROJECT CAN BE FOUND ELECTRONICALLY BY SELECTING PROJECT CONTROL DATA AT:*
HTTP://WWW.DOH.DOT.STATE.NC.US/PRECONSTRUCT/HIGHWAY/LOCATION/PROJECT/

THE FILES TO BE FOUND ARE AS FOLLOWS:
b5726_ls_control.txt

SITE CALIBRATION INFORMATION HAS NOT BEEN PROVIDED FOR THIS PROJECT. IF FURTHER INFORMATION IS NEEDED, PLEASE CONTACT THE LOCATION AND SURVEYS UNIT.

INDICATES GEODETIC CONTROL MONUMENTS USED OR SET FOR HORIZONTAL PROJECT CONTROL BY THE NCDOT LOCATION AND SURVEYS UNIT.
PROJECT CONTROL ESTABLISHED USING GLOBAL POSITIONING SYSTEM.
NETWORK ESTABLISHED FROM NGS ONLINE POSITIONING SERVICE (OPUS)

DATUM DESCRIPTION

THE LOCALIZED COORDINATE SYSTEM DEVELOPED FOR THIS PROJECT
IS BASED ON THE STATE PLANE COORDINATES ESTABLISHED BY
NCDOT FOR MONUMENT "5726-2"
WITH NAD 83/NA 2011 STATE PLANE GRID COORDINATES OF
NORTHING: 889442.925(ft) EASTING: 1768375.026(ft)
ELEVATION: 789.88(ft)
THE AVERAGE COMBINED GRID FACTOR USED ON THIS PROJECT
(GROUND TO GRID) IS: 0.99997407
THE N.C. LAMBERT GRID BEARING AND
LOCALIZED HORIZONTAL GROUND DISTANCE FROM
"5726-2" TO -L- STATION 10+00.00 IS
S 16° 02' 51.5" W 1,688.81 (ft)
ALL LINEAR DIMENSIONS ARE LOCALIZED HORIZONTAL DISTANCES
VERTICAL DATUM USED IS NAVD 88

BASELINE DATA

BL

POINT	DESC.	NORTH	EAST	ELEVATION
3	BL-3	887935.6761	1767970.4009	762.00
4	BL-4	888397.2642	1768181.2865	748.82
2	B5726-2	889442.9250	1768375.0260	789.89
1	B5726-1	890393.5820	1768567.5812	807.36

BENCHMARK DATA

BM1 ELEVATION = 750.24
N 888130 E 1768211
BL STATION 7+77.00 138 RIGHT
60D NAIL IN A 22" MAPLE

NOTE: DRAWING NOT TO SCALE

12/01/2005
3:36:55 PM
R:\Roadway\Proj\B-5726_ls_1C-1.dgn

DocuSign Envelope ID: F09959B3-A862-4B56-9346-6E2EE751E284

PROJECT REFERENCE	SHEET NO.
B-5726 – GUILFORD 135	2

ROADWAY DESIGN ENGINEER

NORTH CAROLINA PROFESSIONAL SEAL 21102 ENGINEER TIMOTHY JOHNSON

DocuSigned by: Timothy Johnson
4/26/2018

MOTT MACDONALD I & E, LLC
LICENSE NO. F-0669

DOCUMENT NOT CONSIDERED FINAL UNLESS ALL SIGNATURES COMPLETED

Prepared in the Office of:

MOTT MACDONALD
PO Box 700
Fuquay-Varina, NC 27526
www.mottmac.com/americas

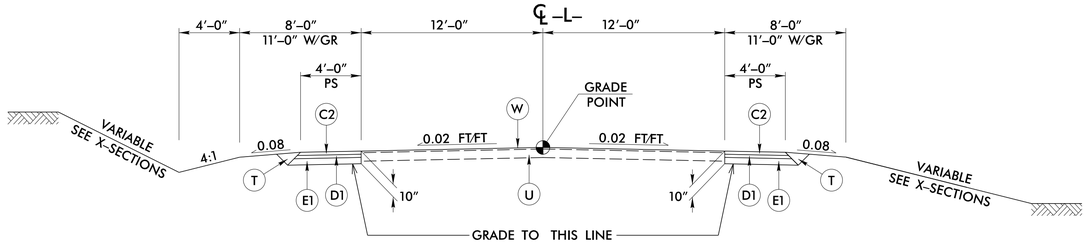

TYPICAL SECTION NO. 1

TRANSITION FROM EXISTING TO TYPICAL SECTION NO. 1:
–L– STA 13+50.00 TO 14+00.00

USE TYPICAL SECTION NO. 1:
–L– STA 14+00.00 TO 15+25.00

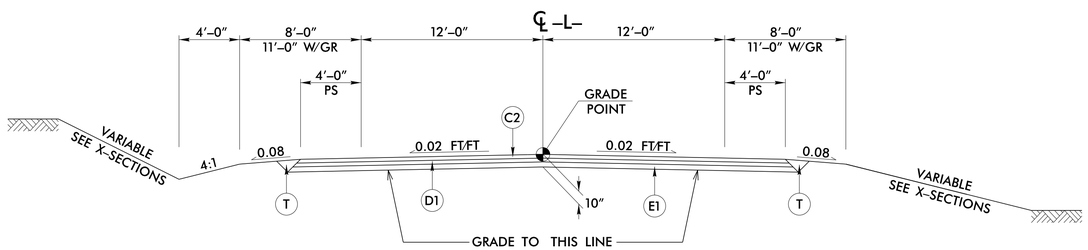

TYPICAL SECTION NO. 2

USE TYPICAL SECTION NO. 2:
–L– STA 15+25.00 TO 17+50.00

TRANSITION FROM TYPICAL SECTION NO. 2 TO EXISTING:
–L– STA 17+50.00 TO 18+00.00

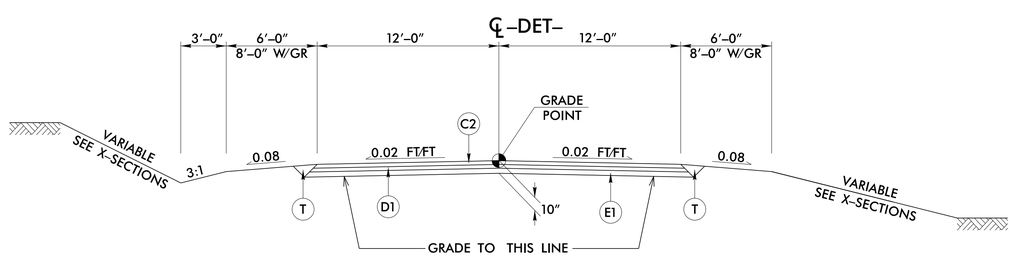

TYPICAL SECTION NO. 3

USE TYPICAL SECTION NO. 3:
–DET– STA 14+24.72 TO 18+30.80

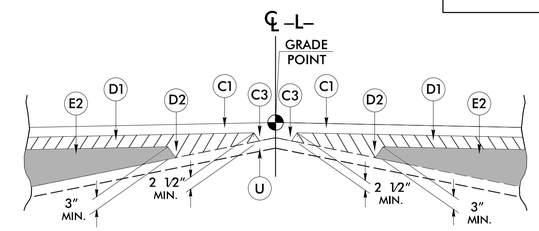

USE IN CONJUCTION WITH TYPICAL SECTION NO. 1

NOTE: AFTER DETOUR REMOVAL OVERLAY EXISTING PAVEMENT WITH (C1) FROM:
–L– STA. 17+50.00 TO STA. 19+00.00

PAVEMENT SCHEDULE

C1	PROP. APPROX. 1½" ASPHALT CONCRETE SURFACE COURSE, TYPE S9.5C, AT AN AVERAGE RATE OF 168 LBS. PER SQ. YD.
C2	PROP. APPROX. 3" ASPHALT CONCRETE SURFACE COURSE, TYPE S9.5C, AT AN AVERAGE RATE OF 168 LBS. PER SQ. YD. IN EACH OF TWO LAYERS.
C3	PROP. VAR. DEPTH ASPHALT CONCRETE SURFACE COURSE, TYPE S9.5C, AT AN AVERAGE RATE OF 112 LBS. PER SQ. YD. PER 1" DEPTH. TO BE PLACED IN LAYERS NOT LESS THAN 1" IN DEPTH OR GREATER THAN 1½" IN DEPTH.
D1	PROP. APPROX. 3" ASPHALT CONCRETE INTERMEDIATE COURSE, TYPE I19.0C, AT AN AVERAGE RATE OF 342 LBS. PER SQ. YD.
D2	PROP. VAR. DEPTH ASPHALT CONCRETE BASE COURSE, TYPE I19.0C, AT AN AVERAGE RATE OF 114 LBS. PER SQ. YD. PER 1" DEPTH TO BE PLACED IN LAYERS NOT LESS THAN 2½" IN DEPTH OR GREATER THAN 4" IN DEPTH.
E1	PROP. APPROX. 4" ASPHALT CONCRETE BASE COURSE, TYPE B25.0C, AT AN AVERAGE RATE OF 456 LBS. PER SQ. YD.
E2	PROP. VAR. DEPTH ASPHALT CONCRETE BASE COURSE, TYPE B25.0C, AT AN AVERAGE RATE OF 114 LBS. PER SQ. YD. PER 1" DEPTH TO BE PLACED IN LAYERS NOT LESS THAN 3" IN DEPTH OR GREATER THAN 5½" IN DEPTH.
T	EARTH MATERIAL.
U	EXISTING PAVEMENT.
W	WEDGING (SEE DETAIL SHOWING METHOD OF WEDGING).

NOTE: PAVEMENT EDGE SLOPES ARE 1:1 UNLESS SHOWN OTHERWISE.

jor66165
R:\Roadway\Proj\B-5726_rdy_typ.dgn
4/26/2018 1:30:25 PM

DocuSign Envelope ID: F09959B3-A862-4B56-9346-6E2EE751E284

*DESIGN EXCEPTION:
SAG VERTICAL CURVE K
VERTICAL SSD

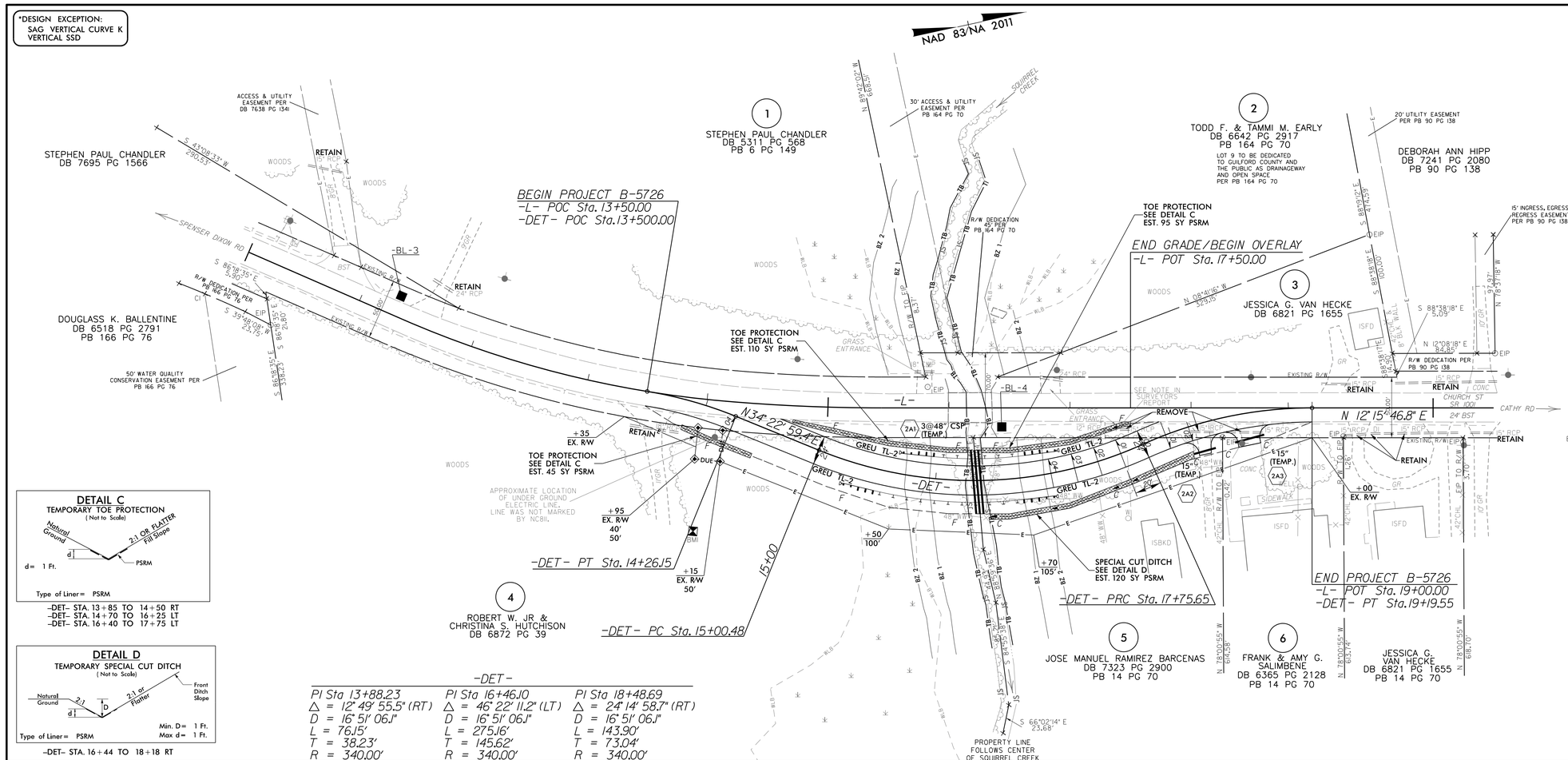

DETAIL C
TEMPORARY TOE PROTECTION
(Not to Scale)

d= 1 Ft.

Type of Liner= PSRM

-DET- STA. 13+85 TO 14+50 RT
-DET- STA. 14+70 TO 16+25 LT
-DET- STA. 16+40 TO 17+75 LT

DETAIL D
TEMPORARY SPECIAL CUT DITCH
(Not to Scale)

Min. D= 1 Ft.
Max d= 1 Ft.

Type of Liner= PSRM

-DET- STA. 16+44 TO 18+18 RT

-DET-

PI Sta 13+88.23	PI Sta 16+46.10	PI Sta 18+48.69
△ = 12° 49' 55.5" (RT)	△ = 46° 22' 11.2" (LT)	△ = 24° 14' 58.7" (RT)
D = 16° 51' 06.1"	D = 16° 51' 06.1"	D = 16° 51' 06.1"
L = 76.15'	L = 275.16'	L = 143.90'
T = 38.23'	T = 145.62'	T = 73.04'
R = 340.00'	R = 340.00'	R = 340.00'

PROJECT REFERENCE	SHEET NO.
B-5726 – GUILFORD 135	2A

ROADWAY DESIGN ENGINEER
NORTH CAROLINA PROFESSIONAL SEAL 21102 ENGINEER
DocuSigned by: James T. Vandiver III
DocuSigned by: Timothy Johnson
4/26/2018
MOTT MACDONALD I & E, LLC
LICENSE NO. F-0669

HYDRAULICS ENGINEER
NORTH CAROLINA PROFESSIONAL SEAL 19732 ENGINEER
DocuSigned by: Stephen Fuh
4/27/2018
HDR ENGINEERING
LICENSE NO. F-0116

DOCUMENT NOT CONSIDERED FINAL UNLESS ALL SIGNATURES COMPLETED

Prepared in the Office of:
MOTT MACDONALD
PO Box 700
Fuquay-Varina, NC 27526
www.mottmac.com/americas

HDR Engineering, Inc. of the Carolinas
555 Fayetteville St. Suite 900 Raleigh, N.C. 27601
N.C.B.E.L.S. License Number: F-0116

VERTICAL SCALE 5' 0 5' 10'
HORIZONTAL SCALE 25' 0 25' 50'

-DET-

PIPE HYDRAULIC DATA
3 @ 48" CSP Sta.16+34

DRAINAGE AREA	=	992	AC
DESIGN FREQUENCY	=	2	YRS
DESIGN DISCHARGE	=	210	CFS
DESIGN HW ELEVATION	=	746.4	FT
100 YEAR DISCHARGE	=	1000	CFS
100 YEAR HW ELEVATION	=	782.9	FT
OVERTOPPING FREQUENCY	=	2+	YRS
OVERTOPPING DISCHARGE	=	235	CFS
OVERTOPPING ELEVATION	=	749.1	FT

4/26/2018
1:30:29 PM
R:\Roadway\Proj\B-5726_rdy_psh_det.dgn
jor-6165

DocuSign Envelope ID: 9C5EA49F-A30A-4B8A-8F0E-B2AF4F4ADDA1

PROJECT REFERENCE NO.	SHEET NO.
B-5726 - GUILFORD 135	2B
DOCUMENT NOT CONSIDERED FINAL UNLESS ALL SIGNATURES COMPLETED	

STATE OF NORTH CAROLINA
DEPT. OF TRANSPORTATION
DIVISION OF HIGHWAYS
RALEIGH, N.C.

ROADWAY DETAIL DRAWING FOR
GUARDRAIL INSTALLATION

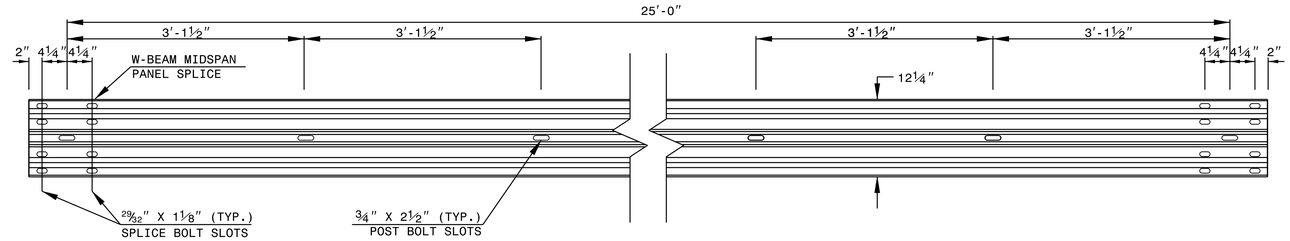

STANDARD W-BEAM GUARDRAIL

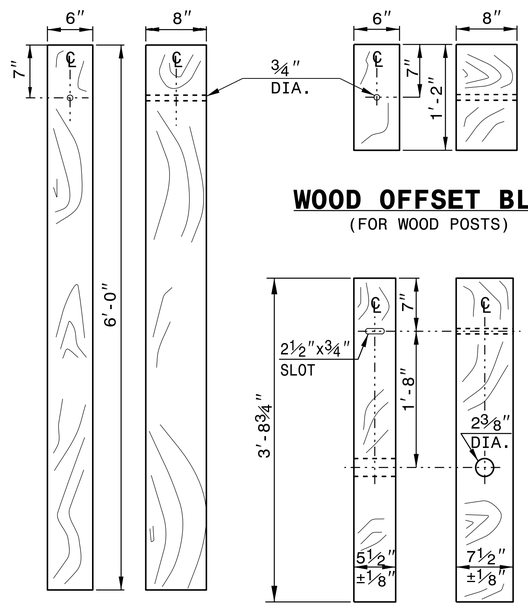

STANDARD LINE POST

WOOD OFFSET BLOCK
(FOR WOOD POSTS)

SHORT WOOD BREAKAWAY POST

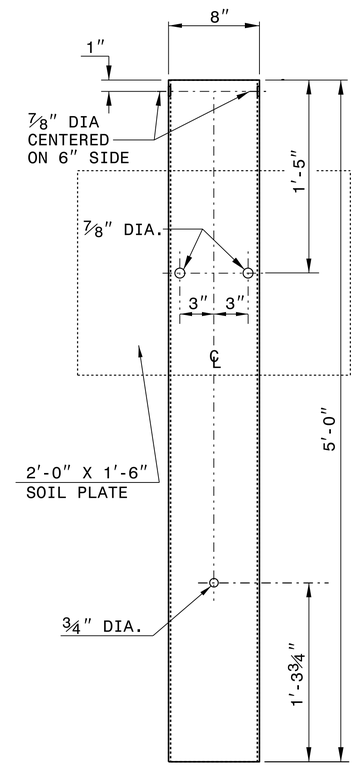

STEEL TUBE
TS 6"x8"x0.1875"

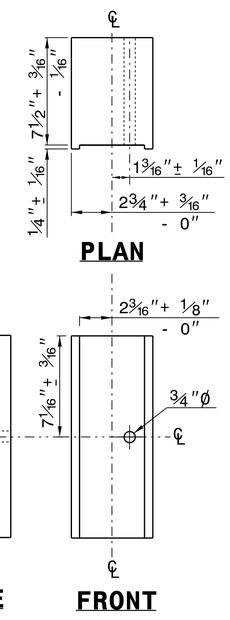

ROUTED OFFSET BLOCK

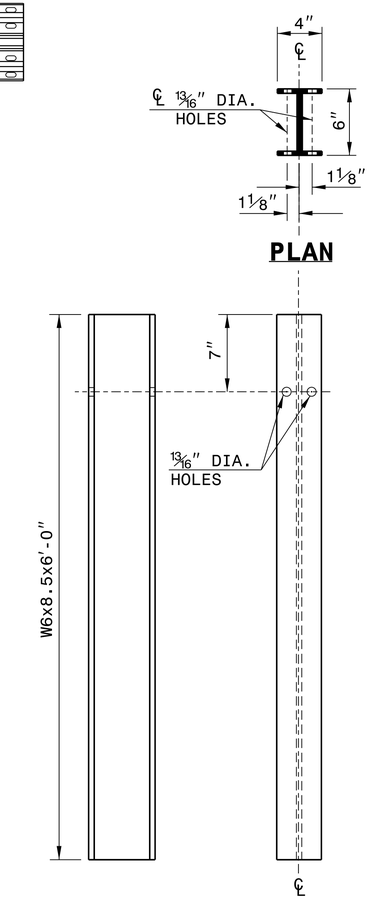

"W6" STEEL POST

SYSTEM PARTS

SHEET 6 OF 8
862D02

STATE OF NORTH CAROLINA
DEPT. OF TRANSPORTATION
DIVISION OF HIGHWAYS
RALEIGH, N.C.

ROADWAY DETAIL DRAWING FOR
GUARDRAIL INSTALLATION

SHEET 6 OF 8
862D02

NORTH CAROLINA PROFESSIONAL SEAL 022966 ENGINEER JOSEPH A. HOWERTON
DocuSigned by: JOSEPH HOWERTON 9E0F4C45F...
4/27/2018

CONTRACTS STANDARDS AND DEVELOPMENT UNIT
Office 919-707-6950 FAX 919-250-4119

SEE TITLE BLOCK

ORIGINAL BY: J.HOWERTON DATE: 3-7-2018
MODIFIED BY: DATE:
CHECKED BY: DATE:
FILE SPEC.:

"N" = DISTANCE FROM EDGE OF LANE TO FACE OF GUARDRAIL.
TOTAL SHOULDER WIDTH = DISTANCE FROM EDGE OF TRAVEL LANE TO SHOULDER BREAK POINT.
FLARE LENGTH = DISTANCE FROM LAST SECTION OF PARALLEL GUARDRAIL TO END OF GUARDRAIL.
W = TOTAL WIDTH OF FLARE FROM BEGINNING OF TAPER TO END OF GUARDRAIL.
G = GATING IMPACT ATTENUATOR TYPE 350
NG = NON-GATING IMPACT ATTENUATOR TYPE 350

TEMPORARY GUARDRAIL SUMMARY

SURVEY LINE	BEG. STA.	END STA.	LOCATION	LENGTH			WARRANT POINT		"N" DIST. FROM E.O.L.	TOTAL SHOULDER WIDTH	FLARE LENGTH		W		ANCHORS									IMPACT ATTENUATOR TYPE 350			REMARKS
				STRAIGHT	SHOP CURVED	DOUBLE FACED	APPROACH END	TRAILING END			APPROACH END	TRAILING END	APPROACH END	TRAILING END	AT-1	GRAU 350	TYPE III	GREU TL-3	GREU TL-2					NO.	PERMITTED G	PERMITTED NG	
-DET-	15+25.00	17+00.00	RT	175.00'					6'	8'									2								
-DET-	15+75.00	17+00.00	LT	125.00'					6'	8'									2								
		SUBTOTAL		300.00'																							
		LESS ANCHOR DEDUCTIONS																									
		GREU TL-2 4 x 25.00'	=	-100.00'																							
		TOTAL		200.00'															4								

GUARDRAIL SUMMARY

SURVEY LINE	BEG. STA.	END STA.	LOCATION	LENGTH			WARRANT POINT		"N" DIST. FROM E.O.L.	TOTAL SHOULDER WIDTH	FLARE LENGTH		W		ANCHORS					IMPACT ATTENUATOR TYPE 350			REMARKS
				STRAIGHT	SHOP CURVED	DOUBLE FACED	APPROACH END	TRAILING END			APPROACH END	TRAILING END	APPROACH END	TRAILING END	AT-1	GRAU 350	TYPE III	GREU TL-3		NO.	PERMITTED G	PERMITTED NG	
-L-	15+32.00	17+07.00	RT	175.00'					8'	11'								2					
-L-	15+32.00	17+07.00	LT	175.00'					8'	11'								2					
		SUBTOTAL		350.00'																			
		LESS ANCHOR DEDUCTIONS																					
		GREU TL-3 4 x 50.00'	=	-200.00'																			
		TOTAL		150'														4					

SUB-REGIONAL & REGIONAL LIST OF PIPES, ENDWALLS, ETC. (FOR PIPES 48" & UNDER)

STATION	LOCATION (LT,RT, OR CL)	STRUCTURE NO. FROM	STRUCTURE NO. TO	TOP ELEVATION	INVERT ELEVATION	INVERT ELEVATION	SLOPE CRITICAL	DRAINAGE PIPE (RCP, CSP, CAAP, HDPE, or PVC) 12"	15"	18"	24"	30"	36"	42"	48"	DO NOT USE RCP	DO NOT USE PVC	DO NOT USE CAAP	DO NOT USE HDPE	C.S. PIPE 12" .064	15" .064	18" .064	24" .064	36" .079	42" .109	48" .109	R.C. PIPE (CLASS III) 15"	18"	24"	30"	36"	42"	48"	R.C. PIPE (CLASS IV) 12"	15"	18"	24"	30"	36"	42"	48"
SIZE / THICKNESS OR GAUGE																																									
18+50	RT	401																																							
-DET-																																									
16+30	CL	2A1																								168'															
18+20	RT	2A2																																							
18+60	RT	2A3																																							
TOTAL																										168'															

STATION	**" R. C. PIPE (CLASS V)	**" R. C. PIPE CULVERTS, CONTRACTOR DESIGN PIPE	**" R. C. PIPE CULVERTS, CONTRACTOR DESIGN PIPE	15" SIDE DRAIN PIPE	18" SIDE DRAIN PIPE	ENDWALLS STD. 838.01, STD. 838.11 OR STD. 838.80 (UNLESS NOTED OTHERWISE) CU. YDS. R.C.P.	C.S.P.	QUANTITIES FOR DRAINAGE STRUCTURES * TOTAL L.F. FOR PAY QUANTITY SHALL BE COL. 'A' + (1.3 X COL.'B') PER EACH (0' THRU 5.0')	LIN. *FT. A 5.0' THRU 10.0'	LIN. *FT. B 10.0' AND ABOVE	C.B. STD. 840.01 OR STD. 840.02	FRAME, GRATES AND HOOD STANDARD 840.03 TYPE OF GRATE E	F	G		CONCRETE TRANSITIONAL SECTION CATCH BASIN	CONCRETE TRANSITIONAL SECTION DROP INLET	G.D.I. FRAME WITH GRATE STD. 840.22	G.D.I. FRAME WITH TWO GRATES STD. 840.22	G.D.I. (N.S.) FRAME WITH GRATE STD. 840.24	G.D.I. (N.S.) FRAME WITH TWO GRATES STD. 840.24	G.D.I. (N.S.) FRAME WITH TWO GRATES STD. 840.29	T.B.D.I. STD. 840.35	CORR. STEEL ELBOWS NO. & SIZE	CONC. COLLARS CL. "B" C.Y. STD 840.72	CONC. & BRICK PIPE PLUG, C.Y. STD. 840.71	PIPE REMOVAL LIN.FT.	REMARKS
18+50				64'																							40'	
-DET-																												
16+30																											168'	TEMPORARY PIPE
18+20				20'																							64'	TEMPORARY PIPE
18+60				24'																							56'	TEMPORARY PIPE
TOTAL				108'																							328'	

ABBREVIATIONS

- C.B. CATCH BASIN
- N.D.I. NARROW DROP INLET
- D.I. DROP INLET
- G.D.I. GRATED DROP INLET
- G.D.I. (N.S.) GRATED DROP INLET (NARROW SLOT)
- J.B. JUNCTION BOX
- M.H. MANHOLE
- T.B.D.I. TRAFFIC BEARING DROP INLET
- T.B.J.B. TRAFFIC BEARING JUNCTION BOX

NOTE: Invert Elevations are for Bid Purposes only and shall not be used for project construction stakeout.
See "Standard Specifications For Roads and Structures, Section 300-5".

SUMMARY OF EARTHWORK
IN CUBIC YARDS

LOCATION	UNCLASSIFIED EXCAVATION	UNDERCUT	EMBT+%	BORROW	WASTE
-L- 13+50.00 TO 18+00.00	165		995	830	
-DET- 13+50.00 TO 19+19.55	131		1817	1,686	
-DET- REMOVAL 13+50.00 TO 19+19.55	1,376		160		1,216
SUBTOTAL	1,672		2,972	2,516	1,216
WASTE IN LIEU OF BORROW					
PROJECT TOTAL	1,672			2,516	1,216
5% TO REPLACE BORROW				126	
GRAND TOTAL	1,672			2,642	1,216
SAY	1,760			2,780	

NOTE: Approximate quantities only. Unclassified Excavation, Borrow Excavation, Fine Grading, Clearing and Grubbing and Removal of Existing Asphalt Pavement will be paid for at the contract Lump Sum price for "Grading".

jor66165
R:\Roadway\Proj\B-5726_rdy_psh3.dgn
4/26/2018 3:41:27 PM

DocuSign Envelope ID: F09959B3-A862-4B56-9346-6E2EE751E284

PROJECT REFERENCE	SHEET NO.
B-5726 – GUILFORD 135	4

ROADWAY DESIGN ENGINEER
NORTH CAROLINA PROFESSIONAL SEAL 21102 ENGINEER JAMES TIMOTHY JOHNSON
Digitally signed by: James Timothy Johnson
4/26/2018
MOTT MACDONALD I & E, LLC
LICENSE NO. F-0669

HYDRAULICS ENGINEER
NORTH CAROLINA PROFESSIONAL SEAL 19732 ENGINEER STEPHEN LYNN FUH
Digitally signed by: Stephen Lynn Fuh
4/27/2018
HDR ENGINEERING
LICENSE NO. F-0116

DOCUMENT NOT CONSIDERED FINAL UNLESS ALL SIGNATURES COMPLETED

Prepared in the Office of:
MOTT MACDONALD
PO Box 700
Fuquay-Varina, NC 27526
www.mottmac.com/americas

HDR Engineering, Inc. of the Carolinas
555 Fayetteville St. Suite 900 Raleigh, N.C. 27601
N.C.B.E.L.S. License Number: F-0116

VERTICAL SCALE 5' 0 5' 10'
HORIZONTAL SCALE 25' 0 25' 50'

*DESIGN EXCEPTION:
SAG VERTICAL CURVE K
VERTICAL SSD

NAD 83/NA 2011

DETAIL A
TOE PROTECTION
(Not to Scale)

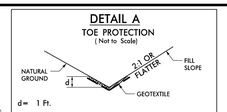

Type of Liner= CL B Rip-Rap

-L- STA. 13+80 TO 15+88 LT
-L- STA. 17+40 TO 17+75 LT
-L- STA. 13+85 TO 14+90 RT

DETAIL B
LATERAL 'V' DITCH
(Not to Scale)

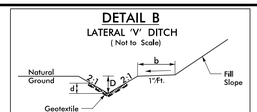

Min. D= 1 Ft.
Max. d= 1 Ft.
b= 2 Ft.
Type of Liner= Class B Rip-Rap

-L- STA. 16+30 TO 17+99 RT

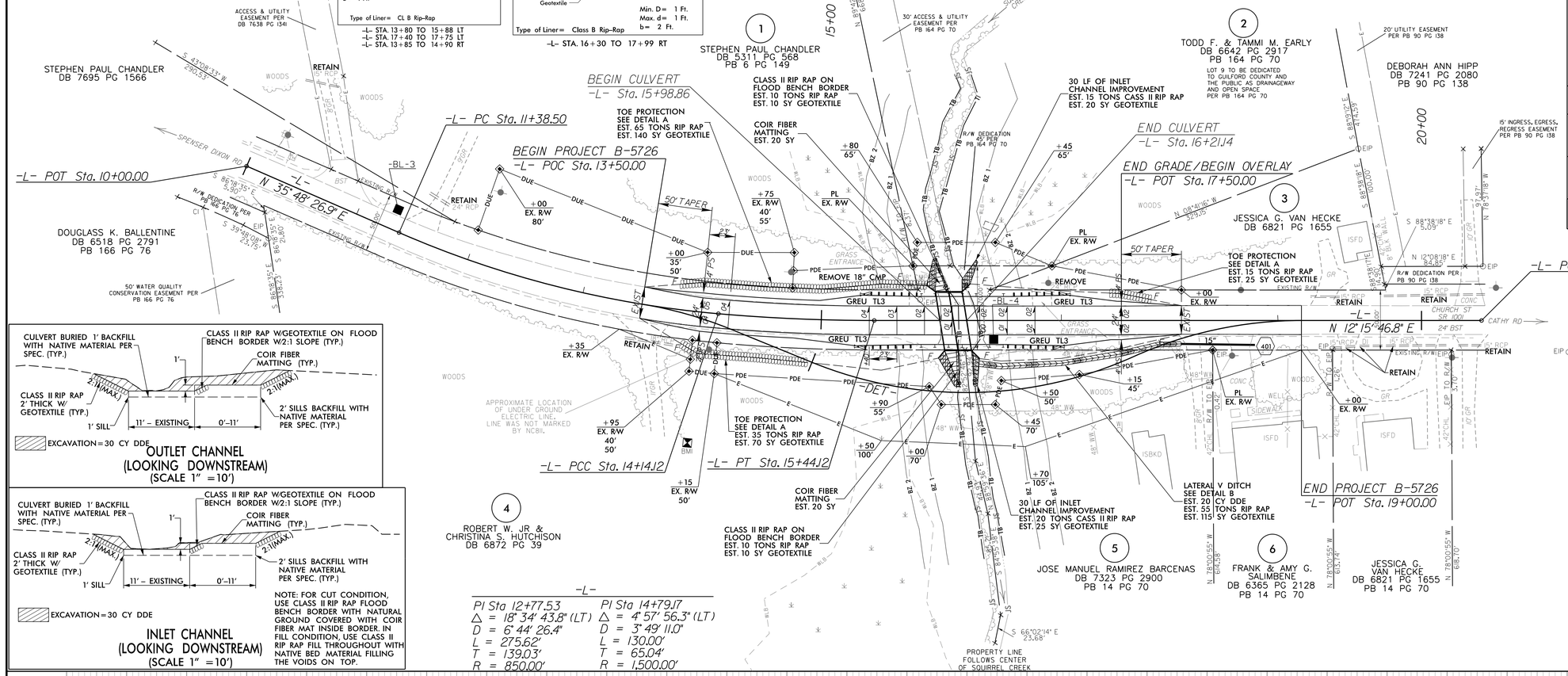

-L-

PI Sta 12+77.53
Δ = 18° 34' 43.8" (LT)
D = 6° 44' 26.4"
L = 275.62'
T = 139.03'
R = 850.00'

PI Sta 14+79.17
Δ = 4° 57' 56.3" (LT)
D = 3° 49' 11.0"
L = 130.00'
T = 65.04'
R = 1,500.00'

OUTLET CHANNEL
(LOOKING DOWNSTREAM)
(SCALE 1" = 10')

NOTE: FOR CUT CONDITION, USE CLASS II RIP RAP FLOOD BENCH BORDER WITH NATURAL GROUND COVERED WITH COIR FIBER MAT INSIDE BORDER. IN FILL CONDITION, USE CLASS II RIP RAP FILL THROUGHOUT WITH NATIVE BED MATERIAL FILLING THE VOIDS ON TOP.

INLET CHANNEL
(LOOKING DOWNSTREAM)
(SCALE 1" = 10')

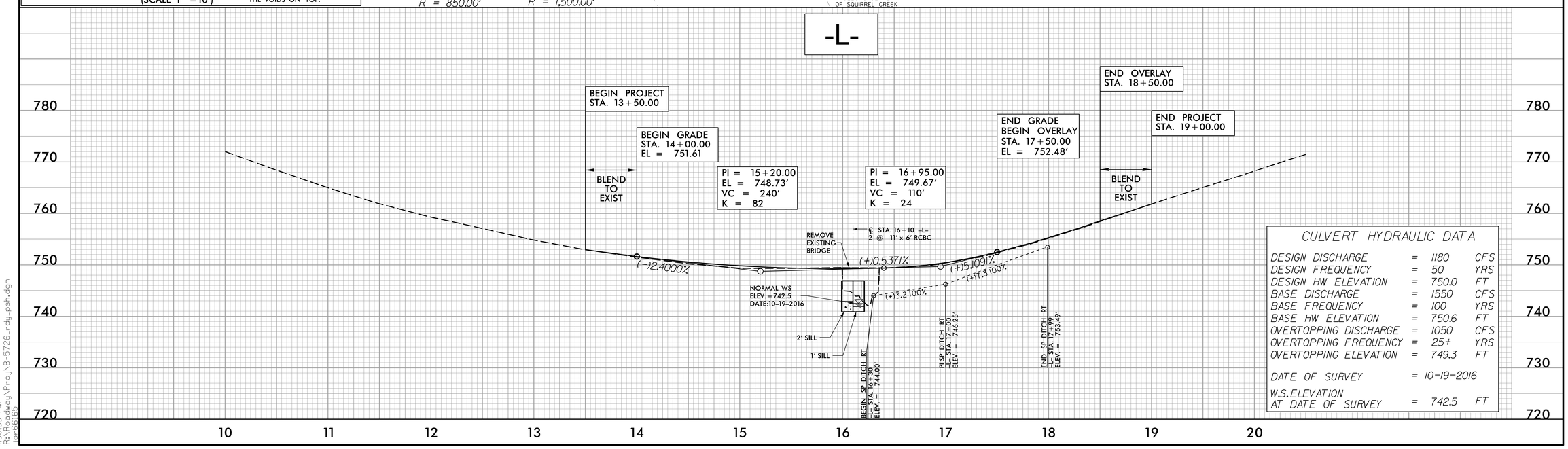

CULVERT HYDRAULIC DATA

DESIGN DISCHARGE	=	1180	CFS
DESIGN FREQUENCY	=	50	YRS
DESIGN HW ELEVATION	=	750.0	FT
BASE DISCHARGE	=	1550	CFS
BASE FREQUENCY	=	100	YRS
BASE HW ELEVATION	=	750.6	FT
OVERTOPPING DISCHARGE	=	1050	CFS
OVERTOPPING FREQUENCY	=	25+	YRS
OVERTOPPING ELEVATION	=	749.3	FT
DATE OF SURVEY	=	10-19-2016	
W.S. ELEVATION AT DATE OF SURVEY	=	742.5	FT

4/26/2018
1:30:35 PM
R:\Roadway\Proj\B-5726_rdy_psh.dgn
jor6165

DocuSign Envelope ID: 0B948089-2702-4944-8611-0BBCFFFC87A5

STATE OF NORTH CAROLINA
DIVISION OF HIGHWAYS

TRANSPORTATION MANAGEMENT PLAN

GUILFORD COUNTY

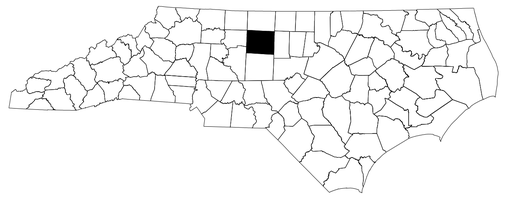

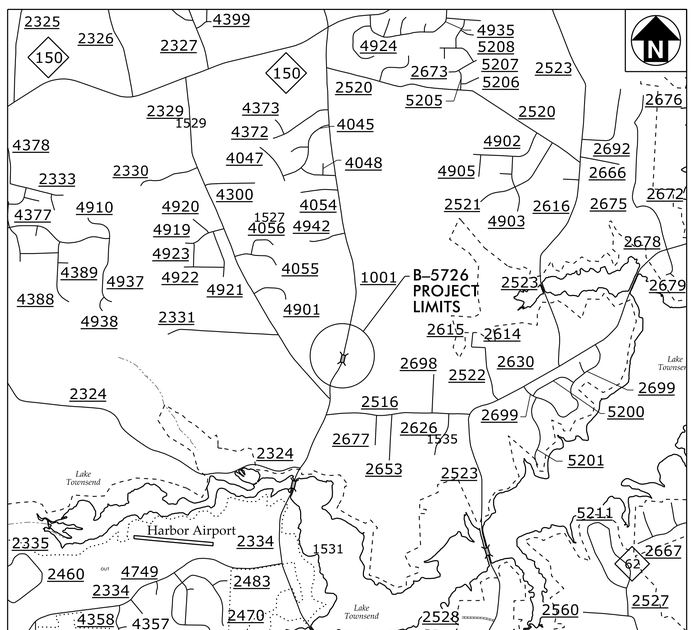

VICINITY MAP
(NOT TO SCALE)

INDEX OF SHEETS

SHEET NO.	TITLE
TMP-1	TITLE SHEET, AND INDEX OF SHEETS
TMP-1A	LIST OF APPLICABLE ROADWAY STANDARD DRAWINGS, LEGEND, AND PAVEMENT MARKING
TMP-1B	GENERAL NOTES
TMP-2	TEMPORARY TRAFFIC CONTROL PHASE I DETAIL
TMP-3	TEMPORARY TRAFFIC CONTROL PHASE II & III DETAIL

SHEET NO.
TMP-1

B-5726

TIP PROJECT:

DOCUMENT NOT CONSIDERED FINAL
UNLESS ALL SIGNATURES COMPLETED

WORK ZONE SAFETY & MOBILITY
"from the MOUNTAINS to the COAST"

PREPARED IN THE OFFICE OF MOTT MACDONALD
FOR NORTH CAROLINA DEPARTMENT OF TRANSPORTATION

TIM JORDAN, PE — TRAFFIC CONTROL PROJECT ENGINEER

PADDY JORDAN — TRAFFIC CONTROL DESIGN TECHNICIAN

MOTT MACDONALD
PO Box 700
Fuquay-Varina, NC 27526
www.mottmac.com/americas
LICENSE NO. F-0669

APPROVED: DocuSigned by: James Timothy Jordan
DATE: 4/26/2018

SEAL
NORTH CAROLINA PROFESSIONAL SEAL 21102 ENGINEER JAMES TIMOTHY JORDAN

jor66165
R:\Traffic\TrafficControl\TCP\B-5726_TC_TCP_TMP01.dgn
1:30:39 PM
4/26/2018

DocuSign Envelope ID: 0B948089-2702-4944-8611-0BBCFFFC87A5

PROJ. REFERENCE NO.	SHEET NO.
B-5726	TMP-1A

ROADWAY STANDARD DRAWINGS

THE FOLLOWING ROADWAY STANDARDS AS SHOWN IN "ROADWAY STANDARD DRAWINGS" - PROJECT SERVICES UNIT - N.C. DEPARTMENT OF TRANSPORTATION - RALEIGH, N.C., DATED JANUARY 2018 ARE APPLICABLE TO THIS PROJECT AND BY REFERENCE HEREBY ARE CONSIDERED A PART OF THESE PLANS:

STD. NO.	TITLE
1101.01	WORK ZONE WARNING SIGNS
1101.02	TEMPORARY LANE CLOSURES
1101.03	TEMPORARY ROAD CLOSURES
1101.04	TEMPORARY SHOULDER CLOSURES
1101.05	WORK ZONE VEHICLE ACCESSES
1101.11	TRAFFIC CONTROL DESIGN TABLES
1110.01	STATIONARY WORK ZONE SIGNS
1110.02	PORTABLE WORK ZONE SIGNS
1130.01	DRUMS
1135.01	CONES
1145.01	BARRICADES
1150.01	FLAGGING DEVICES
1180.01	SKINNY - DRUM
1205.01	PAVEMENT MARKINGS - LINE TYPES AND OFFSETS
1205.02	PAVEMENT MARKINGS - TWO LANE AND MULTILANE ROADWAYS
1205.12	PAVEMENT MARKINGS - BRIDGES
1261.01	GUARDRAIL AND BARRIER DELINEATORS - INSTALLATION SPACING
1261.02	GUARDRAIL AND BARRIER DELINEATORS - TYPES AND MOUNTING
1262.01	GUARDRAIL END DELINEATION

LEGEND

GENERAL

- DIRECTION OF TRAFFIC FLOW
- DIRECTION OF PEDESTRIAN TRAFFIC FLOW
- EXIST. PVMT.
- NORTH ARROW
- PROPOSED PVMT.
- TEMP. SHORING (LOCATION PURPOSES ONLY)
- WORK AREA
- REMOVAL
- PAVEMENT OVERLAY
- USER DEFINED (IF NEEDED)

SIGNALS

EXISTING PROPOSED TEMPORARY

PAVEMENT MARKINGS

- EXISTING LINES
- TEMPORARY LINES

TRAFFIC CONTROL DEVICES

- BARRICADE (TYPE III)
- CONE
- DRUM SKINNY DRUM TUBULAR MARKER
- TEMPORARY CRASH CUSHION
- FLASHING ARROW BOARD
- FLAGGER
- LAW ENFORCEMENT
- TRUCK MOUNTED ATTENUATOR (TMA)
- CHANGEABLE MESSAGE SIGN

TEMPORARY SIGNING

- PORTABLE SIGN
- STATIONARY SIGN
- STATIONARY OR PORTABLE SIGN

PAVEMENT MARKERS

- CRYSTAL/CRYSTAL
- CRYSTAL/RED
- YELLOW/YELLOW

PAVEMENT MARKING SYMBOLS

PAVEMENT MARKING SYMBOLS

TEMPORARY PAVEMENT MARKINGS

PA	PAINT WHITE EDGELINE (4")	1140 LF
PI	PAINT YELLOW DOUBLE CENTER (4")	1140 LF
MH	YELLOW/YELLOW TEMPORARY RAISED	7 EA

PAINT QUANTITIES INCLUDE TWO APPLICATIONS OF EACH

FINAL PAVEMENT MARKINGS

TA	THERMOPLASTIC WHITE EDGELINE (4", 90 MILS)	1600 LF
TI	THERMOPLASTIC YELLOW DOUBLE CENTER (4", 120 MILS)	1600 LF

APPROVED: DocuSigned by: James Timothy Jordan 3A6B2C2B... DATE: 4/26/2018

SEAL

NORTH CAROLINA PROFESSIONAL SEAL 21102 ENGINEER JAMES TIMOTHY JORDAN

DOCUMENT NOT CONSIDERED FINAL UNLESS ALL SIGNATURES COMPLETED

MOTT MACDONALD
PO Box 700
Fuquay-Varina, NC 27526
www.mottmac.com/americas
LICENSE NO. F-0669

ROADWAY STANDARD DRAWINGS & LEGEND

jor66165
R:\Traffic\TrafficControl\TCP\B-5726_TC_TCP_TMP01A.dgn
4/26/2018 1:30:42 PM

DocuSign Envelope ID: 0B948089-2702-4944-8611-0BBCFFFC87A5

GENERAL NOTES

CHANGES MAY BE REQUIRED WHEN PHYSICAL DIMENSIONS IN THE DETAIL DRAWINGS, STANDARD DETAILS, AND ROADWAY DETAILS ARE NOT ATTAINABLE TO MEET FIELD CONDITIONS OR RESULT IN DUPLICATE OR UNDESIRED OVERLAPPING OF DEVICES. MODIFICATION MAY INCLUDE: MOVING, SUPPLEMENTING, COVERING, OR REMOVAL OF DEVICES AS DIRECTED BY THE ENGINEER.

THE FOLLOWING GENERAL NOTES APPLY AT ALL TIMES FOR THE DURATION OF THE CONSTRUCTION PROJECT EXCEPT WHEN OTHERWISE NOTED IN THE PLAN OR DIRECTED BY THE ENGINEER.

TIME RESTRICTIONS

A) DO NOT CLOSE ROADS AS FOLLOWS:

ROAD NAME	DAY AND TIME RESTRICTIONS
1. SR 1001 (-L-)	ANYTIME

B) DO NOT STOP TRAFFIC AS FOLLOWS:

ROAD NAME	DAY AND TIME RESTRICTIONS
1. SR 1001 (-L-)	MONDAY-FRIDAY / 6-9 AM
2. SR 1001 (-L-)	MONDAY-FRIDAY / 4-7 PM

C) DO NOT CONDUCT ANY HAULING OPERATIONS AGAINST THE FLOW OF TRAFFIC OF AN OPEN TRAVELWAY UNLESS THE HAULING OPERATION IS PROTECTED BY BARRIER OR GUARDRAIL OR AS DIRECTED BY THE ENGINEER.

LANE AND SHOULDER CLOSURE REQUIREMENTS

D) REMOVE LANE CLOSURE DEVICES FROM THE LANE WHEN WORK IS NOT BEING PERFORMED BEHIND THE LANE CLOSURE OR WHEN A LANE CLOSURE IS NO LONGER NEEDED OR AS DIRECTED BY THE ENGINEER.

E) WHEN PERSONNEL AND/OR EQUIPMENT ARE WORKING WITHIN 15 FT OF AN OPEN TRAVEL LANE, CLOSE THE NEAREST OPEN SHOULDER USING ROADWAY STANDARD DRAWING NO. 1101.04 UNLESS THE WORK AREA IS PROTECTED BY BARRIER OR GUARDRAIL OR A LANE CLOSURE IS INSTALLED.

F) WHEN PERSONNEL AND/OR EQUIPMENT ARE WORKING ON THE SHOULDER ADJACENT TO AN UNDIVIDED FACILITY AND WITHIN 5 FT OF AN OPEN TRAVEL LANE, CLOSE THE NEAREST OPEN TRAVEL LANE USING ROADWAY STANDARD DRAWING NO. 1101.02 UNLESS THE WORK AREA IS PROTECTED BY BARRIER OR GUARDRAIL.

WHEN PERSONNEL AND/OR EQUIPMENT ARE WORKING ON THE SHOULDER ADJACENT TO A DIVIDED FACILITY AND WITHIN 10 FT OF AN OPEN TRAVEL LANE, CLOSE THE NEAREST OPEN TRAVEL LANE USING ROADWAY STANDARD DRAWING NO. 1101.02 UNLESS THE WORK AREA IS PROTECTED BY BARRIER OR GUARDRAIL.

G) WHEN PERSONNEL AND/OR EQUIPMENT ARE WORKING WITHIN A LANE OF TRAVEL OF AN UNDIVIDED OR DIVIDED FACILITY, CLOSE THE LANE ACCORDING TO THE TRAFFIC CONTROL PLANS, ROADWAY STANDARD DRAWINGS, OR AS DIRECTED BY THE ENGINEER. CONDUCT THE WORK SO THAT ALL PERSONNEL AND/OR EQUIPMENT REMAIN WITHIN THE CLOSED TRAVEL LANE.

H) DO NOT WORK SIMULTANEOUSLY WITHIN 15 FT ON BOTH SIDES OF AN OPEN TRAVELWAY, RAMP, OR LOOP WITHIN THE SAME LOCATION UNLESS PROTECTED WITH GUARDRAIL OR BARRIER.

I) PROVIDE TRAFFIC CONTROL FOR APPROPRIATE LANE CLOSURES FOR SURVEYING DONE BY THE DEPARTMENT.

PAVEMENT EDGE DROP OFF REQUIREMENTS

I) BACKFILL AT A 6:1 SLOPE UP TO THE EDGE AND ELEVATION OF EXISTING PAVEMENT IN AREAS ADJACENT TO AN OPENED TRAVEL LANE THAT HAS AN EDGE OF PAVEMENT DROP-OFF AS FOLLOWS:

BACKFILL DROP-OFFS THAT EXCEED 2 INCHES ON ROADWAYS WITH POSTED SPEED LIMITS OF 45 MPH OR GREATER.

BACKFILL DROP-OFFS THAT EXCEED 3 INCHES ON ROADWAYS WITH POSTED SPEED LIMITS LESS THAN 45 MPH.

BACKFILL WITH SUITABLE COMPACTED MATERIAL, AS APPROVED BY THE ENGINEER, AT NO EXPENSE TO THE DEPARTMENT.

J) DO NOT EXCEED A DIFFERENCE OF 2 INCHES IN ELEVATION BETWEEN OPEN LANES OF TRAFFIC FOR NOMINAL LIFTS OF 1.5 INCHES. INSTALL ADVANCE WARNING "UNEVEN LANES" SIGNS (W8-11) 200 FEET IN ADVANCE AND A MINIMUM OF EVERY HALF MILE THROUGHOUT THE UNEVEN AREA.

TRAFFIC PATTERN ALTERATIONS

K) NOTIFY THE ENGINEER TWENTY ONE (21) CALENDAR DAYS PRIOR TO ANY TRAFFIC PATTERN ALTERATION.

SIGNING

L) INSTALL ADVANCE WORK ZONE WARNING SIGNS WHEN WORK IS WITHIN 40 FT FROM THE EDGE OF TRAVEL LANE AND NO MORE THAN THREE (3) DAYS PRIOR TO THE BEGINNING OF CONSTRUCTION.

M) ENSURE ALL NECESSARY SIGNING IS IN PLACE PRIOR TO ALTERING ANY TRAFFIC PATTERN.

N) INSTALL BLACK ON ORANGE "DIP" SIGNS (W8-2) AND/OR "BUMP" SIGNS (W8-1) 200 FT IN ADVANCE OF THE UNEVEN AREA, OR AS DIRECTED BY THE ENGINEER.

TRAFFIC CONTROL DEVICES

O) WHEN LANE CLOSURES ARE NOT IN EFFECT SPACE CHANNELIZING DEVICES IN WORK AREAS NO GREATER IN FEET THAN TWICE THE POSTED SPEED LIMIT (MPH) EXCEPT, 10 FT ON-CENTER IN RADII, AND 3 FT OFF THE EDGE OF AN OPEN TRAVELWAY. REFER TO STANDARD SPECIFICATIONS FOR ROADS AND STRUCTURES SECTIONS 1130 (DRUMS), 1135 (CONES) AND 1180 (SKINNY DRUMS) FOR ADDITIONAL REQUIREMENTS.

P) PLACE TYPE III BARRICADES, WITH "ROAD CLOSED" SIGN R11-2 ATTACHED, OF SUFFICIENT LENGTH TO CLOSE ENTIRE ROADWAY.

PAVEMENT MARKINGS AND MARKERS

Q) INSTALL TEMPORARY PAVEMENT MARKINGS AND TEMPORARY PAVEMENT MARKERS ON INTERIM LAYERS OF PAVEMENT AS FOLLOWS:

ROAD NAME	MARKING	MARKER
1. ALL ROADS	PAINT	TEMPORARY RAISED (DETOUR ONLY)

R) PLACE ONE APPLICATION OF PAINT FOR TEMPORARY TRAFFIC PATTERNS. PLACE A SECOND APPLICATION OF PAINT SIX (6) MONTHS AFTER THE INITIAL APPLICATION AND EVERY SIX MONTHS AS DIRECTED BY THE ENGINEER.

S) TIE PROPOSED PAVEMENT MARKING LINES TO EXISTING PAVEMENT MARKING LINES.

T) REMOVE/REPLACE ANY CONFLICTING/DAMAGED PAVEMENT MARKINGS AND MARKERS BY THE END OF EACH DAY'S OPERATION.

APPROVED: DocuSigned by: James Timothy Jordan DATE: 4/26/2018
SIGNATURE

SEAL — NORTH CAROLINA PROFESSIONAL SEAL 21102 ENGINEER JAMES TIMOTHY JORDAN

DOCUMENT NOT CONSIDERED FINAL UNLESS ALL SIGNATURES COMPLETED

MOTT MACDONALD
PO Box 700
Fuquay-Varina, NC 27526
www.mottmac.com/americas
LICENSE NO. F-0669

GENERAL NOTES

jor66165
R:\Traffic\TrafficControl\TCP\B-5726_TC_TCP_TMP01B.dgn
4/26/2018 1:30:44 PM

DocuSign Envelope ID: E0FD63A0-A5D3-4FD0-A3A1-7940A99E6FA7

PROJ. REFERENCE NO.	SHEET NO.
B-5726	TMP-2

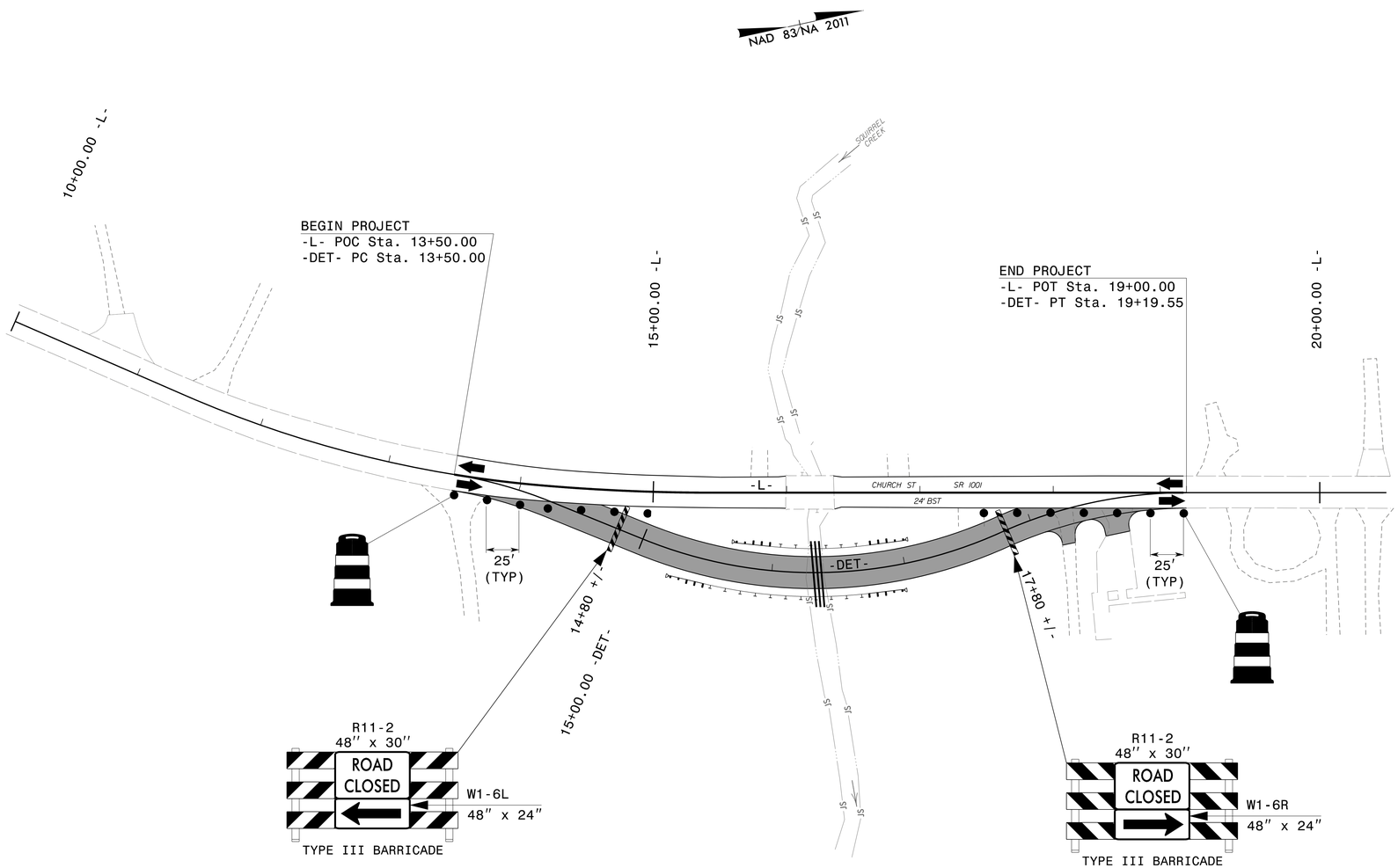

PHASE I

TRAFFIC SHALL BE MAINTAINED IN THE EXISTING TWO-LANE, TWO-WAY PATTERN DURING PHASE I; MAINTAIN DRIVEWAY ACCESS.

STEP 1: USING ROADWAY STANDARD DRAWING 1101.01 SHEET 3 OF 3 AND FLAGGERS AS NEEDED:
-INSTALL ADVANCE WARNING SIGNS, DRUMS, AND BARRICADES AS SHOWN ON TMP-2.

STEP 2: CONSTRUCT THE DETOUR FROM -DET- STA. 14+80+/- TO 17+80+/-AS SHOWN ON TMP-2.

STEP 3: USING ROADWAY STANDARD DRAWING 1101.02 SHEET 1 OF 15 AND FLAGGERS AS NEEDED, COMPLETE STEP 3 IN A CONTINUOUS MANNER.
-TIE THE DETOUR INTO THE EXISTING ROADWAY FROM -DET- STA. 13+50.00 TO 14+80+/- AND FROM -DET- STA. 17+80+/- TO 19+19.55.
-REMOVE THE BARRICADES AND DRUMS ON -DET-
-PLACE TEMPORARY PAVEMENT MARKINGS AND MARKERS ON -DET- AS SHOWN ON TMP-3; REMOVE ANY CONFLICTING EXISTING PAVEMENT MARKINGS.
-SHIFT TRAFFIC TO A TWO-LANE, TWO-WAY PATTERN ON -DET-.
-PLACE ADVANCE WARNING SIGNS, DRUMS AND BARRICADES, CLOSING -L-, AS SHOWN ON TMP-3.

APPROVED: DocuSigned by: James Timothy Jordan 34B3... DATE: 5/1/2018

SEAL

NORTH CAROLINA PROFESSIONAL SEAL 21102 ENGINEER JAMES TIMOTHY JORDAN

DOCUMENT NOT CONSIDERED FINAL UNLESS ALL SIGNATURES COMPLETED

MOTT MACDONALD

PO Box 700
Fuquay-Varina, NC 27526
www.mottmac.com/americas

LICENSE NO. F-0669

PHASE I DETAIL

jor66165
R:\Traffic\TrafficControl\TCP\B-5726_TC_TCP_TMP02.dgn
5/1/2018
10:52:01 AM

DocuSign Envelope ID: 0B948089-2702-4944-8611-0BBCFFFC87A5

PROJ. REFERENCE NO.	SHEET NO.
B-5726	TMP-3

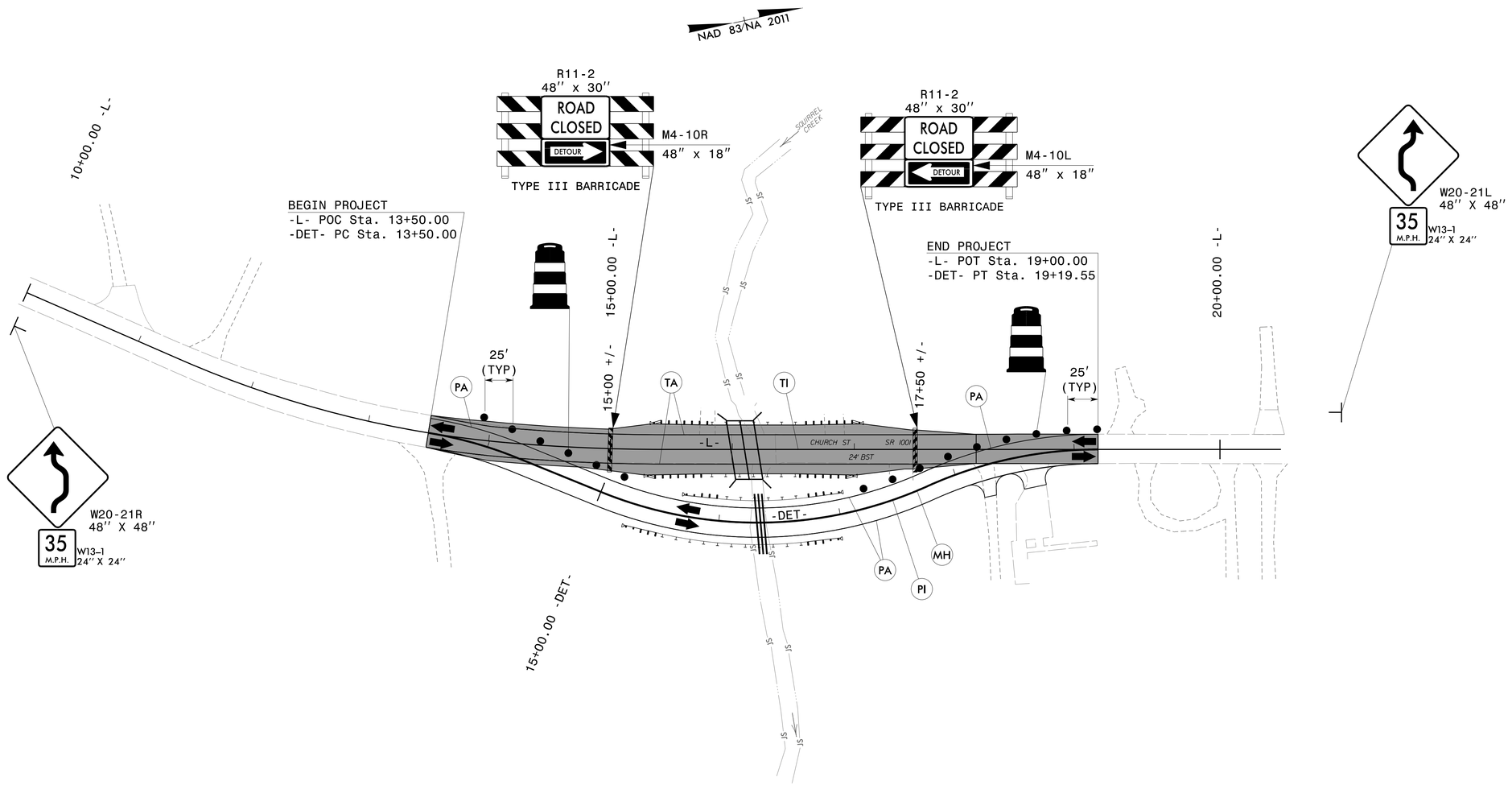

PHASE II

TRAFFIC SHALL BE MAINTAINED IN A TEMPORARY TWO-LANE, TWO-WAY PATTERN DURING PHASE II; MAINTAIN DRIVEWAY ACCESS.

STEP 1: USING ROADWAY STANDARD DRAWING 1101.02 SHEET 1 OF 15 AND FLAGGERS AS NEEDED:
- -REMOVE THE EXISTING STRUCTURE ON -L-.
- -CONSTRUCT THE PROPOSED CULVERT AND APPROACHES, UP TO BUT NOT INCLUDING THE FINAL SURFACE COURSE, FROM -L- STA. 15+00+/- TO STA. 17+50+/- AS SHOWN ON TMP-3.

STEP 2: USING ROADWAY STANDARD DRAWING 1101.02 SHEET 1 OF 15 AND FLAGGERS AS NEEDED, COMPLETE STEP 2 IN A CONTINUOUS MANNER.
- -TIE THE PROPOSED ROADWAY TO THE EXISTING ROADWAY FROM -L- STA. 13+50.00 TO 15+00+/- AND FROM -L- STA. 17+50+/- TO STA. 19+00.00.
- -REMOVE THE BARRICADES AND DRUMS ON -L-
- -SHIFT TRAFFIC TO A TWO-LANE, TWO-WAY PATTERN ON -L-.
- -PLACE DRUMS AND BARRICADES, CLOSING -DET-, AS PREVIOUSLY PLACED IN PHASE I.

PHASE III

STEP 1: USING ROADWAY STANDARD DRAWING 1101.02 SHEET 1 OF 15 AND FLAGGERS AS NEEDED:
- -REMOVE THE DETOUR IN ENTIRETY.
- -PLACE THE FINAL SURFACE COURSE FROM -L- STA. 13+00.00 TO STA. 19+00.00.
- -PLACE FINAL PAVEMENT MARKINGS AS SHOWN ON TMP-3. PAVEMENT MARKERS WILL NOT BE USED ON THE FINAL ROADWAY.

STEP 2: REMOVE ALL ADVANCE WARNING SIGNS AND TRAFFIC CONTROL DEVICES.

jor66165
R:\Traffic\TrafficControl\TCP\B-5726_TC_TCP_TMP03.dgn
4/26/2018 4:33:27 PM

APPROVED: DocuSigned by: James Timothy Jordan 3A9... DATE: 4/26/2018

SEAL

NORTH CAROLINA PROFESSIONAL SEAL 21102 ENGINEER JAMES TIMOTHY JORDAN

DOCUMENT NOT CONSIDERED FINAL UNLESS ALL SIGNATURES COMPLETED

MOTT MACDONALD

PO Box 700
Fuquay-Varina, NC 27526
www.mottmac.com/americas

LICENSE NO. F-0669

PHASE II & III DETAIL

TIP PROJECT: B-5726

STATE	STATE PROJECT REFERENCE NO.	SHEET NO.	TOTAL SHEETS
N.C.	B-5726	EC-1	

STATE PROJ. NO.	F.A. PROJ. NO.	DESCRIPTION

STATE OF NORTH CAROLINA
DIVISION OF HIGHWAYS

PLAN FOR PROPOSED
HIGHWAY EROSION CONTROL

GUILFORD COUNTY

BRIDGE NO. 135 ON SR 1001
OVER SQUIRREL CREEK

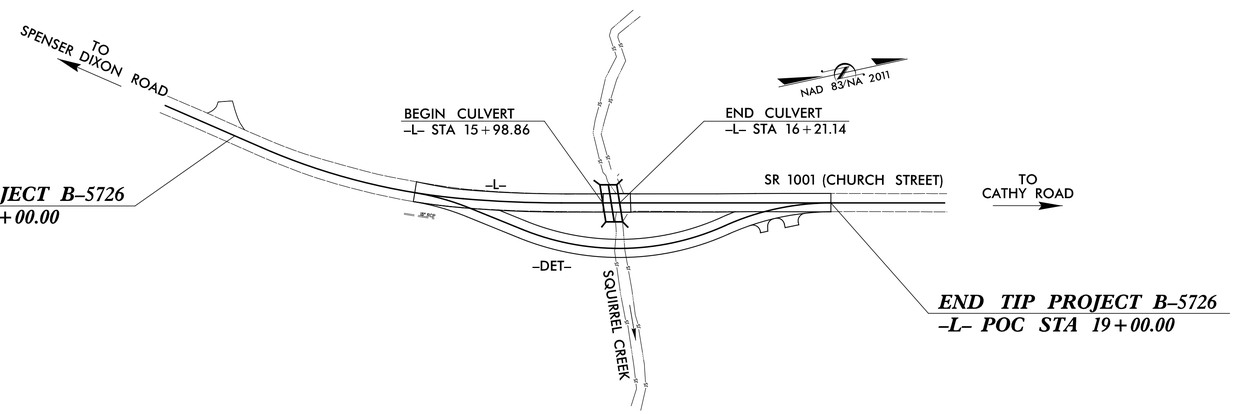

ALEXANDER D. SNIDER, PE
ROADSIDE ENVIRONMENTAL ENGINEER

3064
LEVEL III CERTIFICATION NUMBER

TRENTON J. CORMIER, PE
ROADSIDE ENVIRONMENTAL PROJECT ENGINEER

3377
LEVEL III CERTIFICATION NUMBER

EROSION AND SEDIMENT CONTROL MEASURES

Std. #	Description	Symbol
1630.03	Temporary Silt Ditch	TSD
1630.05	Temporary Diversion	TD
1605.01	Temporary Silt Fence	
1606.01	Special Sediment Control Fence	
1622.01	Temporary Berms and Slope Drains	
1630.02	Silt Basin Type B	
1633.01	Temporary Rock Silt Check Type-A	
	Temporary Rock Silt Check Type-A with Matting and Polyacrylamide (PAM)	
1633.02	Temporary Rock Silt Check Type-B	
	Wattle/Coir Fiber Wattle	EW CFW
	Wattle/Coir Fiber Wattle with Polyacrylamide (PAM)	
1634.01	Temporary Rock Sediment Dam Type-A	
1634.02	Temporary Rock Sediment Dam Type-B	
1635.01	Rock Pipe Inlet Sediment Trap Type-A	
1635.02	Rock Pipe Inlet Sediment Trap Type-B	
1630.04	Stilling Basin	
1630.06	Special Stilling Basin	
	Rock Inlet Sediment Trap:	
1632.01	Type A	A
1632.02	Type B	B
1632.03	Type C	C
	Skimmer Basin	
	Tiered Skimmer Basin	
	Infiltration Basin	

THIS PROJECT CONTAINS EROSION CONTROL PLANS FOR CLEARING AND GRUBBING PHASE OF CONSTRUCTION.

ENVIRONMENTALLY SENSITIVE AREA(S) EXIST ON THIS PROJECT

Refer To E. C. Special Provisions for Special Considerations.

THIS PROJECT HAS BEEN DESIGNED TO SENSITIVE WATERSHED STANDARDS.

GRAPHIC SCALE

25 0 50
PLANS

25 0 50
PROFILE (HORIZONTAL)

5 0 10
PROFILE (VERTICAL)

THESE EROSION AND SEDIMENT CONTROL PLANS COMPLY WITH THE REGULATIONS SET FORTH BY THE NCG-010000 GENERAL CONSTRUCTION PERMIT EFFECTIVE AUGUST 1, 2016 AND ISSUED BY THE NORTH CAROLINA DEPARTMENT OF ENVIRONMENT AND NATURAL RESOURCES DIVISION OF WATER RESOURCES.

Prepared In the Office of:

HDR Engineering, Inc. of the Carolinas
555 Fayetteville St, Suite 900 Raleigh, N.C. 27601
N.C.B.E.L.S. License Number: F-0116

Designed by:

ALEXANDER D. SNIDER, PE ***3064***
NAME *LEVEL III CERTIFICATION NO.*

Reviewed In the Office of:

ROADSIDE ENVIRONMENTAL UNIT
1 South Wilmington St.
Raleigh, NC 27611

2018 STANDARD SPECIFICATIONS

Reviewed by:

AARON HARPER, EI

Roadway Standard Drawings

The following roadway english standards as appear in "Roadway Standard Drawings"– Roadway Design Unit – N. C. Department of Transportation – Raleigh, N. C., dated January 2018 and the latest revison thereto are applicable to this project and by reference hereby are considered a part of these plans.

1604.01	Railroad Erosion Control Detail	1632.01	Rock Inlet Sediment Trap Type A
1605.01	Temporary Silt Fence	1632.02	Rock Inlet Sediment Trap Type B
1606.01	Special Sediment Control Fence	1632.03	Rock Inlet Sediment Trap Type C
1607.01	Gravel Construction Entrance	1633.01	Temporary Rock Silt Check Type A
1622.01	Temporary Berms and Slope Drains	1633.02	Temporary Rock Silt Check Type B
1630.01	Riser Basin	1634.01	Temporary Rock Sediment Dam Type A
1630.02	Silt Basin Type B	1634.02	Temporary Rock Sediment Dam Type B
1630.03	Temporary Silt Ditch	1635.01	Rock Pipe Inlet Sediment Trap Type A
1630.04	Stilling Basin	1635.02	Rock Pipe Inlet Sediment Trap Type B
1630.05	Temporary Diversion	1640.01	Coir Fiber Baffle
1630.06	Special Stilling Basin	1645.01	Temporary Stream Crossing
1631.01	Matting Installation		

PROJECT REFERENCE NO.	SHEET NO.
B-5726	EC-2

TEMPORARY ROCK SILT CHECK TYPE 'A' WITH EXCELSIOR MATTING AND POLYACRYLAMIDE (PAM)

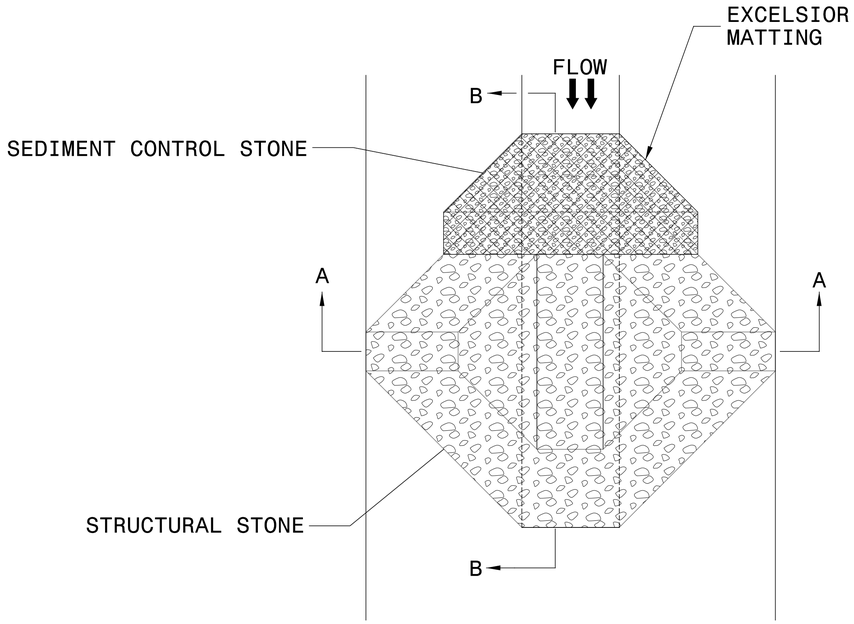

PLAN

NOTES:

INSTALL TEMPORARY ROCK SILT CHECK TYPE A IN ACCORDANCE WITH ROADWAY STANDARD DRAWING NO. 1633.01.

USE EXCELSIOR FOR MATTING MATERIAL AND ANCHOR MATTING SECTION AT TOP AND BOTTOM WITH CLASS B STONE.

PRIOR TO POLYACRYLAMIDE (PAM) APPLICATION, OBTAIN A SOIL SAMPLE FROM PROJECT LOCATION, AND FROM OFFSITE MATERIAL, AND ANALYZE FOR APPROPRIATE PAM FLOCCULANT TO BE APPLIED TO EACH ROCK SILT CHECK.

INITIALLY APPLY 4 OUNCES OF POLYACRYLAMIDE (PAM) TO TOP OF MATTING SECTION AND AFTER EVERY RAINFALL EVENT THAT EQUALS OR EXCEEDS 0.50 INCHES.

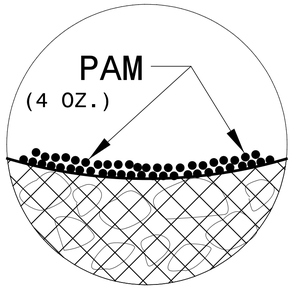

INSET A

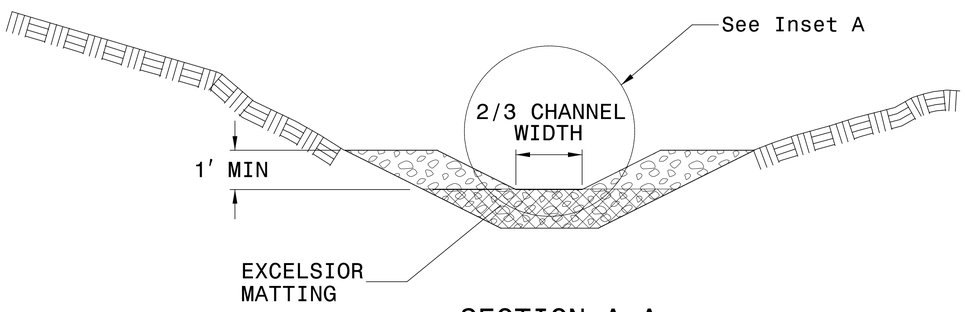

SECTION A-A

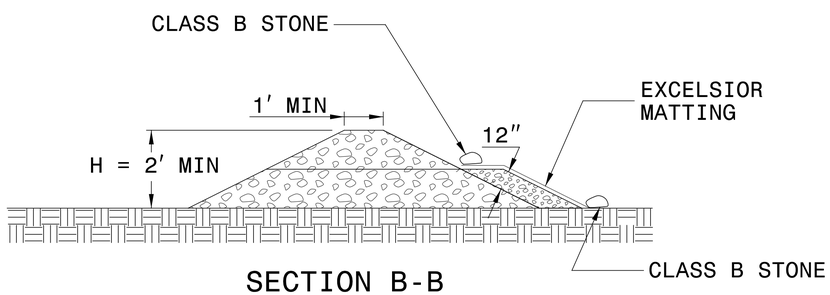

SECTION B-B

NOT TO SCALE

PROJECT REFERENCE NO.	SHEET NO.
B-5726	EC-2-B/CONST.2-B
R/W SHEET NO.	

ROADSIDE ENVIRONMENTAL PROJECT ENGINEER

LEVEL III CERTIFIED BY:
ALEXANDER D SNIDER, PE
CERTIFICATION NUMBER: 3064
ISSUED: MARCH 22, 2017

Prepared in the Office of:
MOTT MACDONALD PO Box 700 Fuquay-Varina, NC 27526 www.mottmac.com/americas

HDR Engineering, Inc. of the Carolinas 555 Fayetteville St. Suite 900 Raleigh, N.C. 27601 N.C.B.E.L.S. License Number: F-0116

GRAPHIC SCALE

50 0 50 100

CLEARING AND GRUBBING
EROSION CONTROL FOR
CONSTRUCTION SHEET 2-B

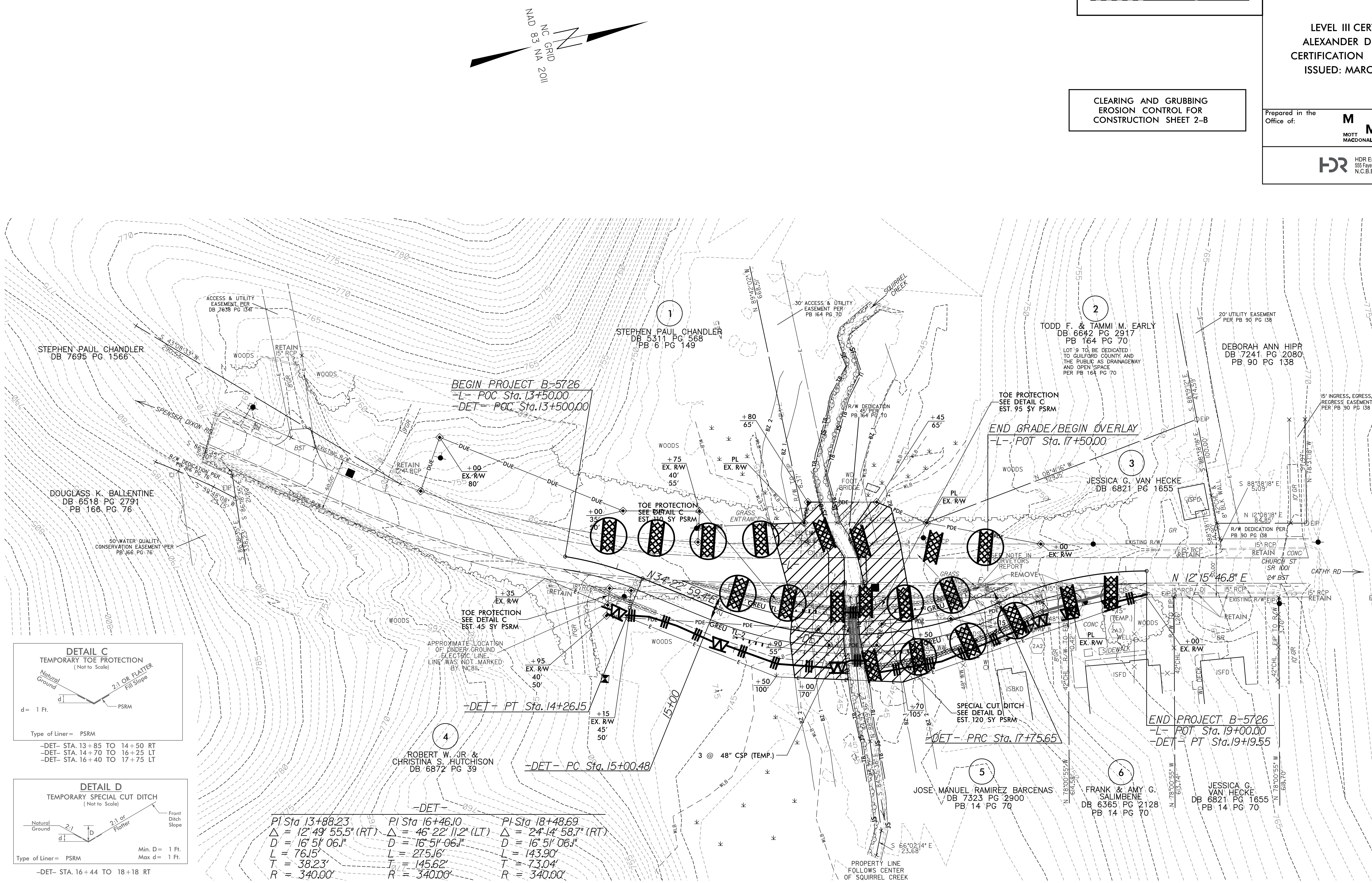

NOTE:
ALL EROSION CONTROL DEVICES SHOWN ARE LOCATED WITHIN EXISTING/PROPOSED R/W OR EASEMENT.

NOTE:
PLACE TEMPORARY ROCK SILT CHECKS TYPE - A AT DRAINAGE OUTLETS.

ENVIRONMENTALLY SENSITIVE AREA
SEE PROJECT SPECIAL PROVISIONS

PROJECT REFERENCE NO.	SHEET NO.
B-5726	EC-3

DIVISION OF HIGHWAYS
STATE OF NORTH CAROLINA

SOIL STABILIZATION TIMEFRAMES

SITE DESCRIPTION	STABILIZATION TIME	TIMEFRAME EXCEPTIONS
PERIMETER DIKES, SWALES, DITCHES AND SLOPES	7 DAYS	NONE
HIGH QUALITY WATER (HQW) ZONES	7 DAYS	NONE
SLOPES STEEPER THAN 3:1	7 DAYS	IF SLOPES ARE 10' OR LESS IN LENGTH AND ARE NOT STEEPER THAN 2:1, 14 DAYS ARE ALLOWED.
SLOPES 3:1 OR FLATTER	14 DAYS	7 DAYS FOR SLOPES GREATER THAN 50' IN LENGTH.
ALL OTHER AREAS WITH SLOPES FLATTER THAN 4:1	14 DAYS	NONE, EXCEPT FOR PERIMETERS AND HQW ZONES.

PROJECT REFERENCE NO.	SHEET NO.
B-5726	EC-3A

DIVISION OF HIGHWAYS
STATE OF NORTH CAROLINA

SOIL STABILIZATION SUMMARY SHEET

PERMANENT SOIL REINFORCEMNT MAT

CONST SHEET NO.	LINE	FROM STATION	TO STATION	SIDE	ESTIMATE (SY)
2-B	-DET-	11+00	12+50	RT	270
				SUBTOTAL	270
	ADDITIONAL PSRM TO BE INSTALLED				0
				TOTAL	270
				SAY	270

PERMANENT SOIL REINFORCEMENT MAT

CONST SHEET NO.	LINE	FROM STATION	TO STATION	SIDE	ESTIMATE (SY)

PROJECT REFERENCE NO.	SHEET NO.
B-5726	EC-4/CONST.4
R/W SHEET NO.	

GRAPHIC SCALE
50 0 50 100

ROADSIDE ENVIRONMENTAL PROJECT ENGINEER

LEVEL III CERTIFIED BY:
ALEXANDER D SNIDER, PE
CERTIFICATION NUMBER: 3064
ISSUED: MARCH 22, 2017

Prepared in the Office of:
MOTT MACDONALD
PO Box 700
Fuquay-Varina, NC 27526
www.mottmac.com/americas

HDR Engineering, Inc. of the Carolinas
555 Fayetteville St, Suite 900 Raleigh, N.C. 27601
N.C.B.E.L.S. License Number: F-0116

CLEARING AND GRUBBING
EROSION CONTROL FOR
CONSTRUCTION SHEET 4

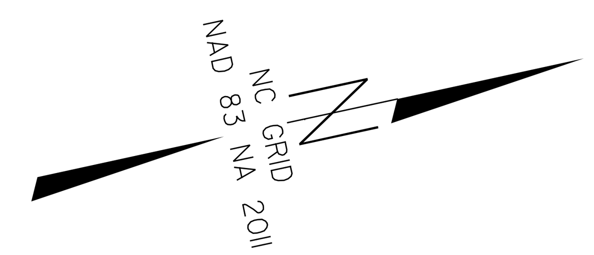

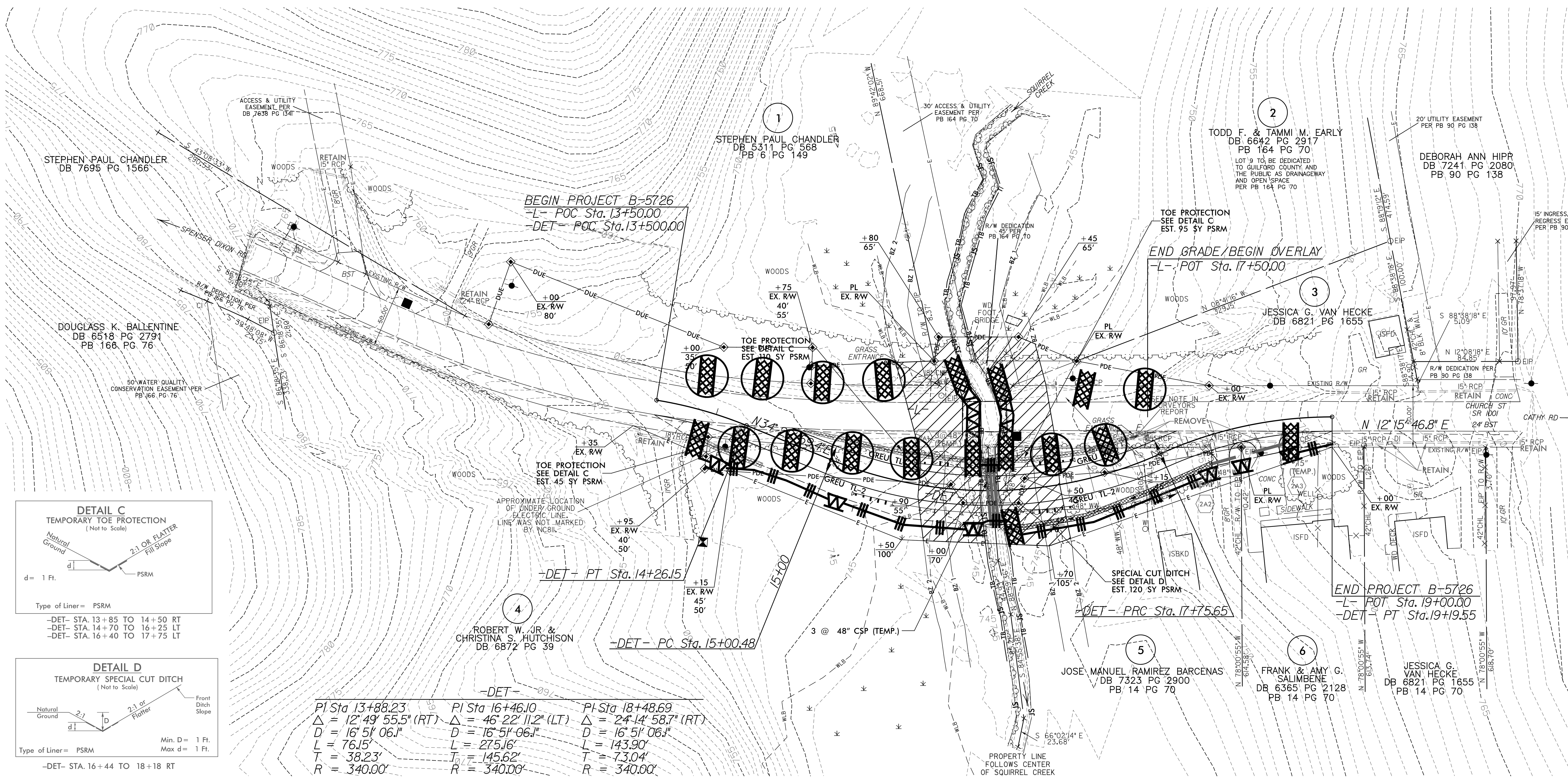

NOTE:
ALL EROSION CONTROL DEVICES SHOWN ARE LOCATED WITHIN EXISTING/PROPOSED R/W OR EASEMENT.

NOTE:
PLACE TEMPORARY ROCK SILT CHECKS TYPE – A AT DRAINAGE OUTLETS.

ENVIRONMENTALLY SENSITIVE AREA
SEE PROJECT SPECIAL PROVISIONS

CONSTRUCTION SEQUENCE

GRAPHIC SCALE
30 0 30 60

PROJECT REFERENCE NO.	SHEET NO.
B-5726	EC-4A/CONST.4
R/W SHEET NO.	
ROADSIDE ENVIRONMENTAL PROJECT ENGINEER	

LEVEL III CERTIFIED BY:
ALEXANDER D SNIDER, PE
CERTIFICATION NUMBER: 3064
ISSUED: MARCH 22, 2017

NAD 83/NA 2011

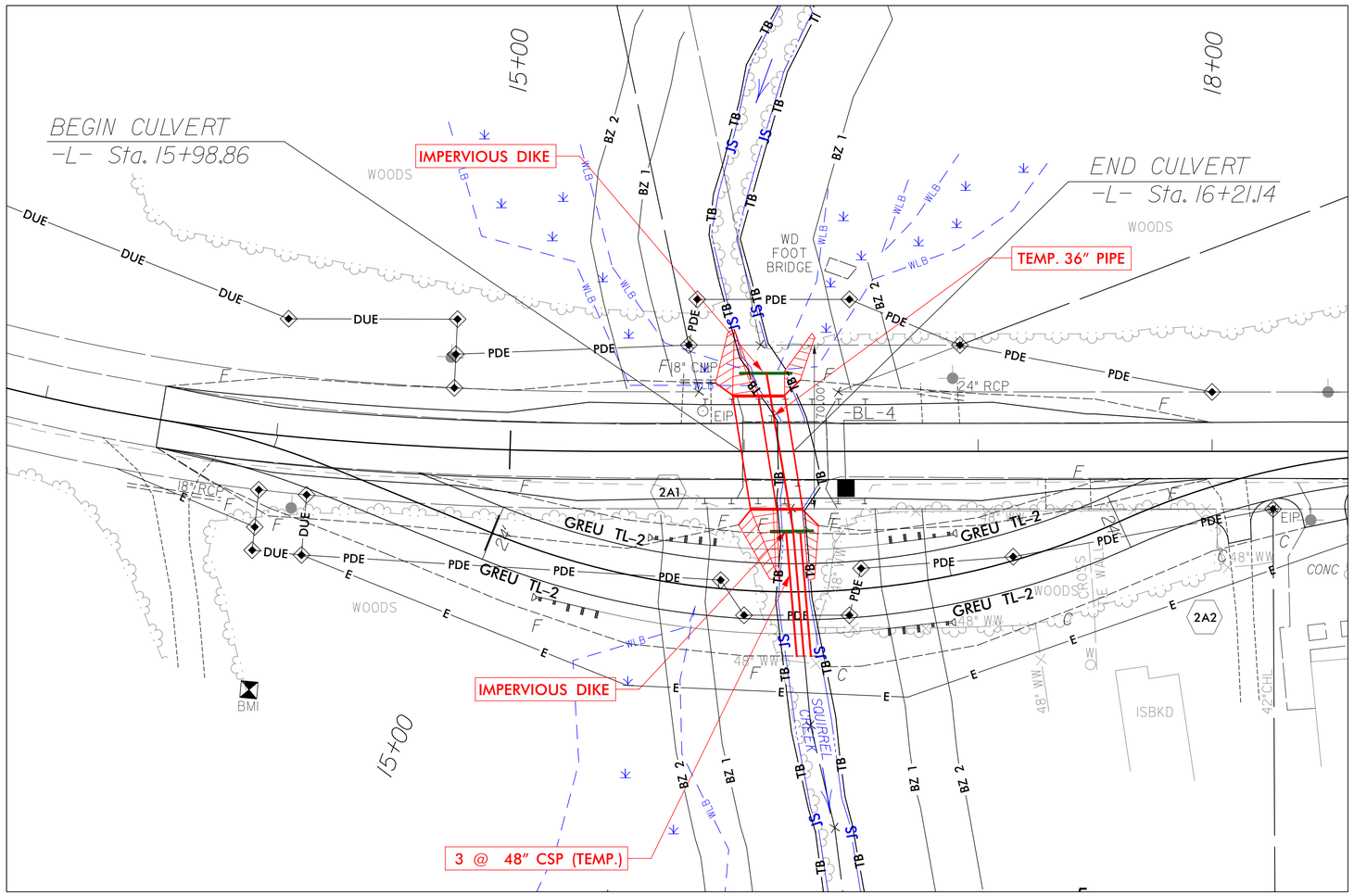

CULVERT CONSTRUCTION SEQUENCE:

1.) INSTALL ALL TEMPORARY SEDIMENT CONTROL DEVICES NECESSARY FOR CULVERT CONSTRUCTION.

2.) INSTALL ROADWAY DETOUR AND 3 @ 48" CSP (TEMPORARY) AND SHIFT TRAFFIC TO DETOUR. DETOUR CONSTRUCTION TO BE COMPELTED IN THE DRY.

3.) INSTALL SPECIAL STILLING BASINS (4) WITHIN PROJECT RIGHT-OF-WAY. PUMP ALL EFFLUENT INTO SPECIAL STILLING BASINS.

4.) INSTALL IMPERVIOUS DIKES AND INSTALL 36" TEMP. PIPE (69 LF).

5.) DE-WATER EFFLUENT FROM WORK SITE INTO SPECIAL STILLING BASINS.

6.) CONSTRUCT PROPOSED 2 @ 11' X 6' RCBC AND UPSTREAM CHANNEL IMPROVEMENTS.

7.) REMOVE 36" TEMPORARY PIPE AND IMPERVIOUS DIKES TO ALLOW FLOW THROUGH NEWLY CONSTRUCTED CULVERT. REMOVE SPECIAL STILLING BASINS.

8.) COMPLETE PROPOSED ROADWAY.

9.) SHIFT TRAFFIC TO PROPOSED ROADWAY AND REMOVE ROADWAY DETOUR. DETOUR CONSTRUCTION TO BE COMPELTED IN THE DRY.

10.) COMPLETE CULVERT DOWNSTREAM CHANNEL IMPROVEMENTS. DETOUR CONSTRUCTION TO BE COMPELTED IN THE DRY.

5/14/99
4/20/2018
$USERNAME$
$FILEL$

5/14/99

GRAPHIC SCALE

50 0 50 100

PROJECT REFERENCE NO.	SHEET NO.
B-5726	EC-5/CONST.4
R/W SHEET NO.	
ROADSIDE ENVIRONMENTAL PROJECT ENGINEER	

LEVEL III CERTIFIED BY:
ALEXANDER D SNIDER, PE
CERTIFICATION NUMBER: 3064
ISSUED: MARCH 22, 2017

FINAL EROSION CONTROL FOR CONSTRUCTION SHEET 4

Prepared in the Office of:
MOTT MACDONALD PO Box 700 Fuquay-Varina, NC 27526 www.mottmac.com/americas

HDR Engineering, Inc. of the Carolinas 555 Fayetteville St. Suite 900 Raleigh, N.C. 27601 N.C.B.E.L.S. License Number: F-0116

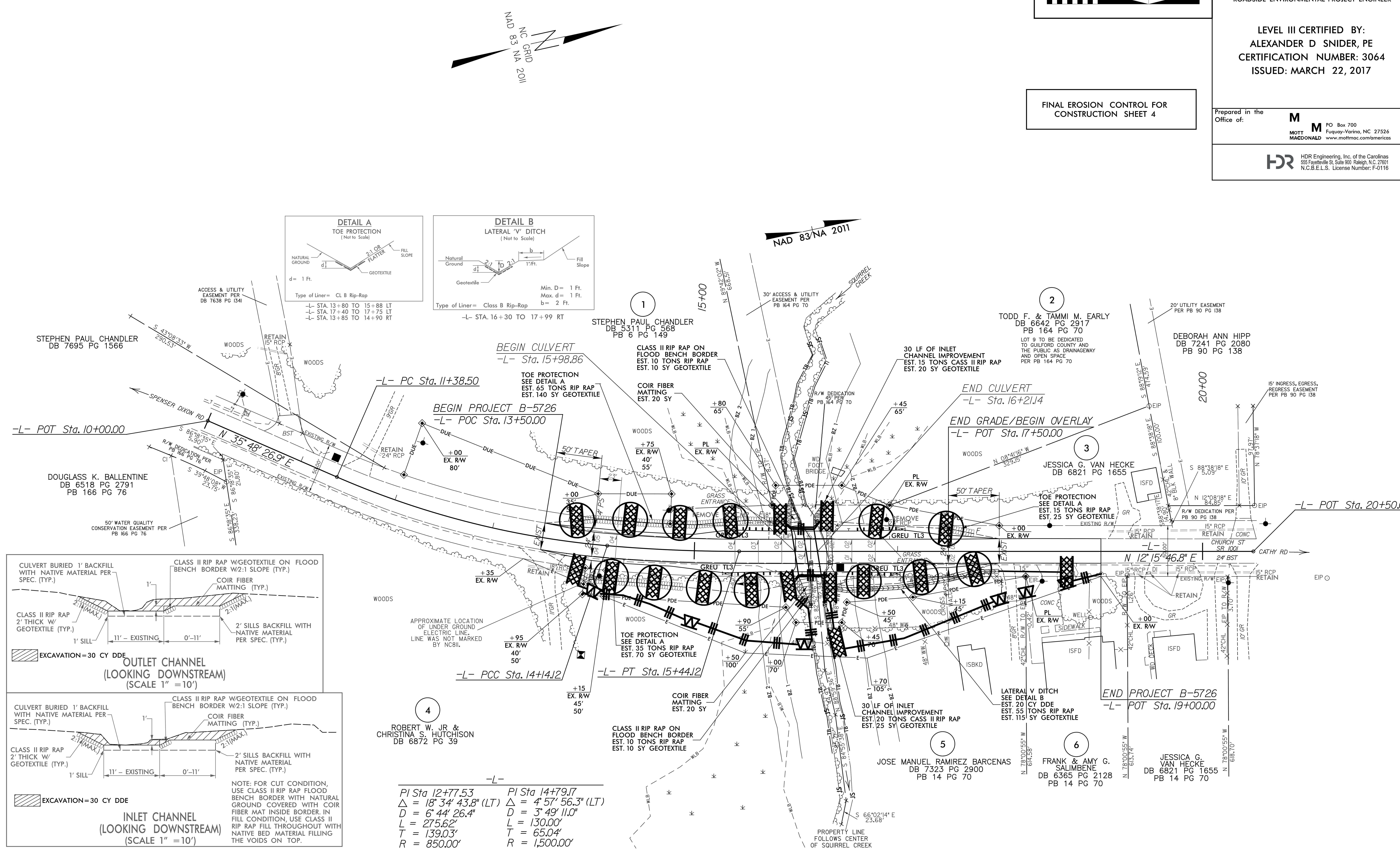

-L-

PI Sta 12+77.53	PI Sta 14+79.17
Δ = 18° 34' 43.8" (LT)	Δ = 4° 57' 56.3" (LT)
D = 6° 44' 26.4"	D = 3° 49' 11.0"
L = 275.62'	L = 130.00'
T = 139.03'	T = 65.04'
R = 850.00'	R = 1,500.00'

NOTE:
ALL EROSION CONTROL DEVICES SHOWN ARE LOCATED WITHIN EXISTING/PROPOSED R/W OR EASEMENT.

STATE	STATE PROJECT REFERENCE NO.	SHEET NO.	TOTAL SHEETS
N.C.	B-5726	RF-1	
STATE PROJ. NO.	F.A. PROJ. NO.	DESCRIPTION	

PLANTING DETAILS

SEEDLING / LINER BAREROOT PLANTING DETAIL

HEALING IN

1. Locate a healing-in site in a shady, well protected area.
2. Excavate a flat bottom trench 12 inches deep and provide drainage.

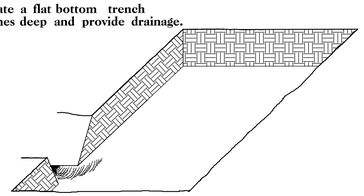

3. Backfill the trench with 2 inches well rotted sawdust. Place a 2 inch layer of well rotted sawdust at a sloping angle at one end of the trench.

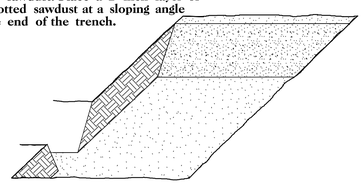

4. Place a single layer of plants against the sloping end so that the root collar is at ground level.

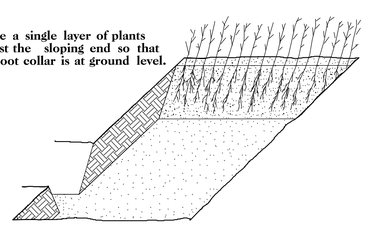

5. Place a 2 inch layer of well rotted sawdust over the roots maintaining a sloping angle.

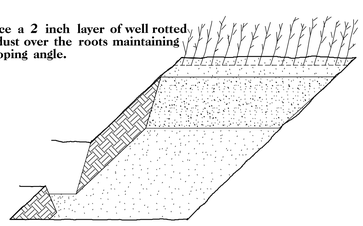

6. Repeat layers of plants and sawdust as necessary and water thoroughly.

DIBBLE PLANTING METHOD
USING THE KBC PLANTING BAR

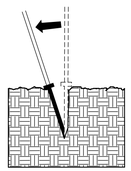

1. Insert planting bar as shown and pull handle toward planter.

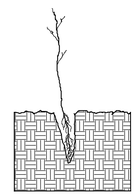

2. Remove planting bar and place seedling at correct depth.

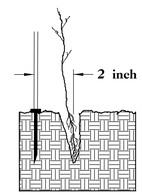

3. Insert planting bar 2 inches toward planter from seedling.

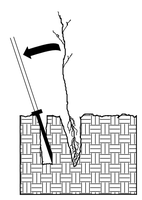

4. Pull handle of bar toward planter, firming soil at bottom.

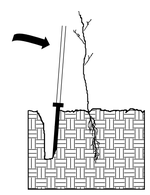

5. Push handle forward firming soil at top.

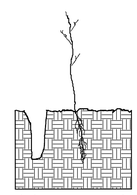

6. Leave compaction hole open. Water thoroughly.

PLANTING NOTES:

PLANTING BAG
During planting, seedlings shall be kept in a moist canvas bag or similar container to prevent the root systems from drying.

KBC PLANTING BAR
Planting bar shall have a blade with a triangular cross section, and shall be 12 inches long, 4 inches wide and 1 inch thick at center.

ROOT PRUNING
All seedlings shall be root pruned, if necessary, so that no roots extend more than 10 inches below the root collar.

REFORESTATION

☐ TREE REFORESTATION SHALL BE PLANTED 6 FT. TO 10 FT. ON CENTER, RANDOM SPACING, AVERAGING 8 FT. ON CENTER, APPROXIMATELY 680 PLANTS PER ACRE.

REFORESTATION

MIXTURE, TYPE, SIZE, AND FURNISH SHALL CONFORM TO THE FOLLOWING:

25%	LIRIODENDRON TULIPIFERA	TULIP POPLAR	12 in – 18 in BR
25%	PLATANUS OCCIDENTALIS	AMERICAN SYCAMORE	12 in – 18 in BR
25%	FRAXINUS PENNSYLVANICA	GREEN ASH	12 in – 18 in BR
25%	BETULA NIGRA	RIVER BIRCH	12 in – 18 in BR

REFORESTATION DETAIL SHEET

N.C.D.O.T. - ROADSIDE ENVIRONMENTAL UNIT

PROJECT REFERENCE	SHEET NO.
B-5726 – GUILFORD 135	U0-1

Prepared in the Office of:

THE WOOTEN COMPANY
LICENSE NO. F-0115

THE WOOTEN COMPANY
120 North Boylan Avenue Raleigh NC 27603-1423
919.828.0531 fax 919.834.3589
License Number: F-0115

DOCUMENT NOT CONSIDERED FINAL UNLESS ALL SIGNATURES COMPLETED

GRAPHIC SCALE
25' 0 25' 50'

UTILITIES BY OTHERS

NOTE:
ALL PROPOSED UTILITY WORK SHOWN ON THIS SHEET WILL BE DONE BY OTHERS

*DESIGN EXCEPTION:
SAG VERTICAL CURVE K
VERTICAL SSD

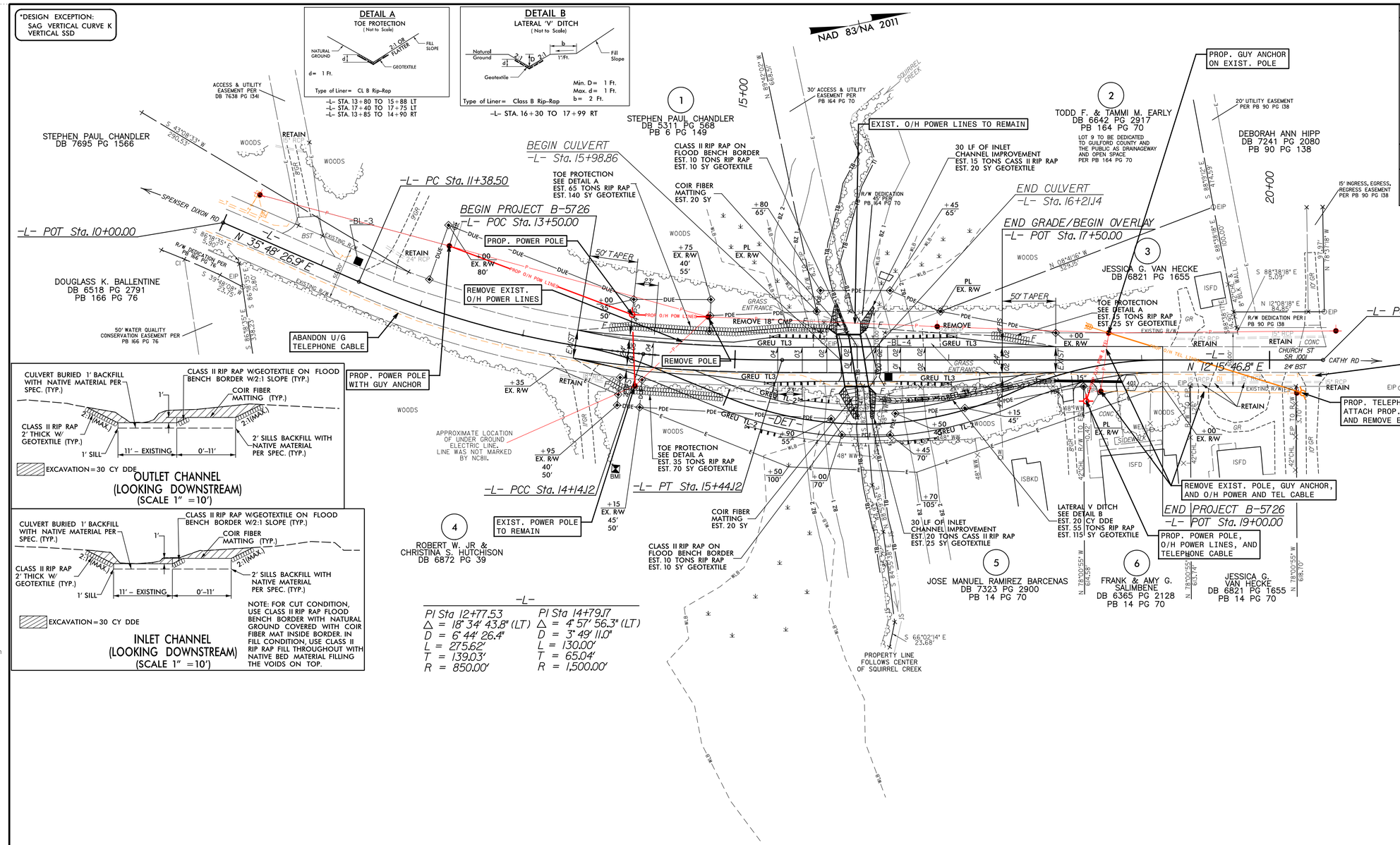

4/24/2018
9:47:49 AM
T:\Projects\Hatch_Mott_MacDonald-3160\D\B-5726_Guilford_135\B-5726_100_Plans\B-5726_utl_Ub0.dgn
jharris

PROJECT REFERENCE	SHEET NO.
B-5726 - GUILFORD 135	X-1

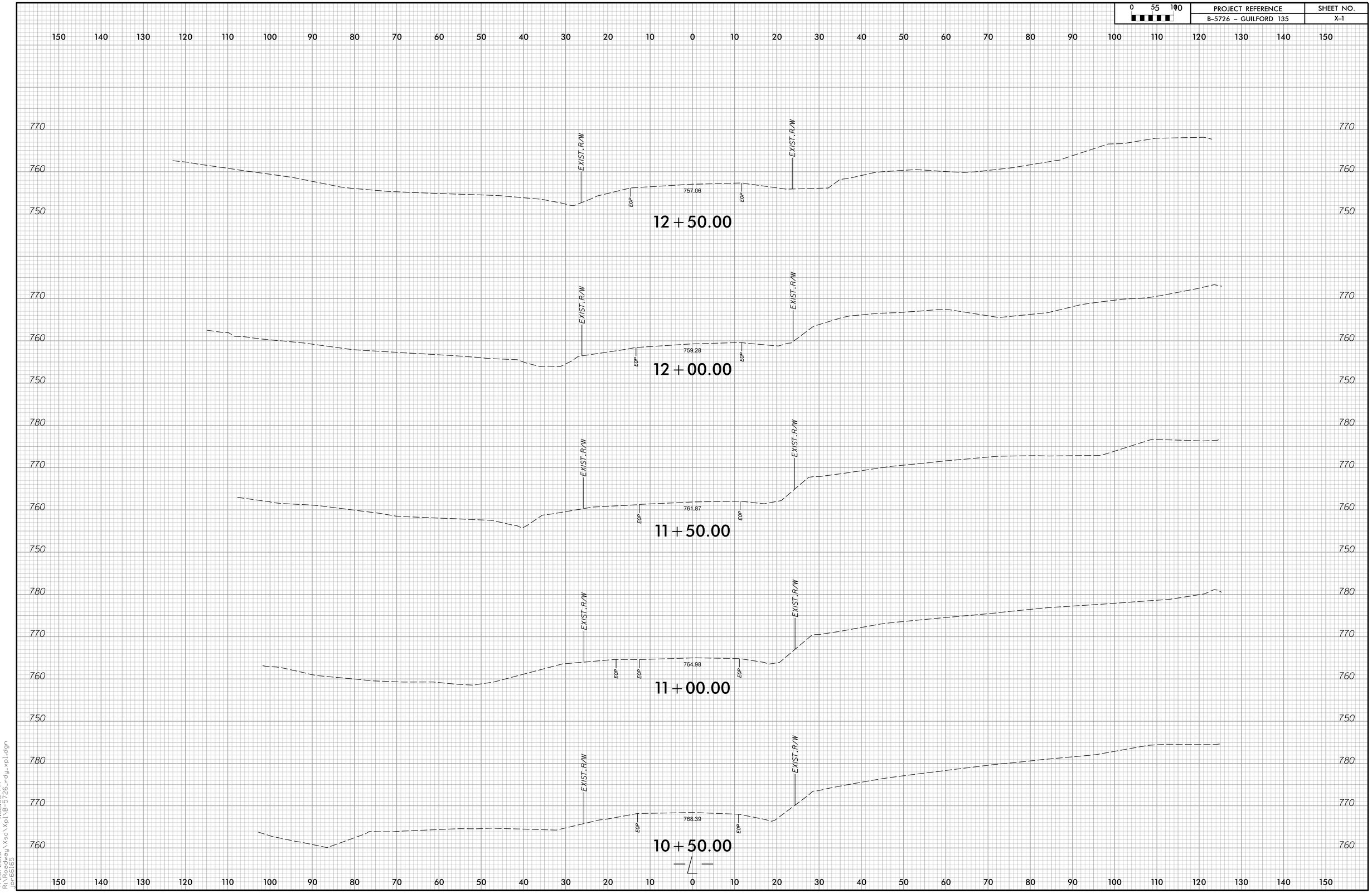

4/26/2018 1:30:53 PM
R:\Roadway\Xsc\Xpl\B-5726_rdy_xpl.dgn
jor-66165

0 55 100	PROJECT REFERENCE	SHEET NO.
	B-5726 - GUILFORD 135	X-2

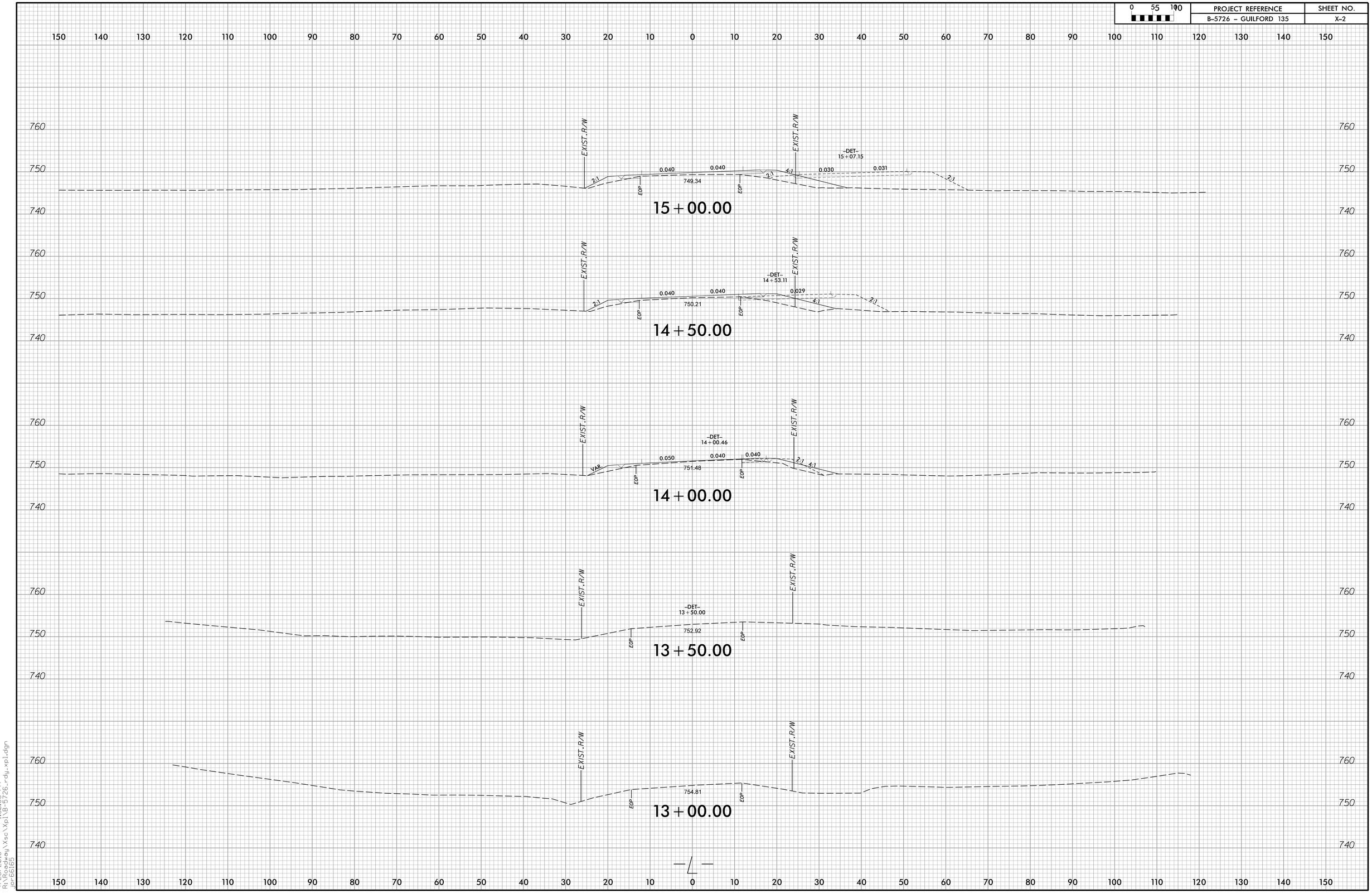

4/26/2018
R:\Roadway\Xsc\Xpl\B-5726_rdy_xpl.dgn
1:30:53 PM
jor-66165

PROJECT REFERENCE	SHEET NO.
B-5726 – GUILFORD 135	X-3

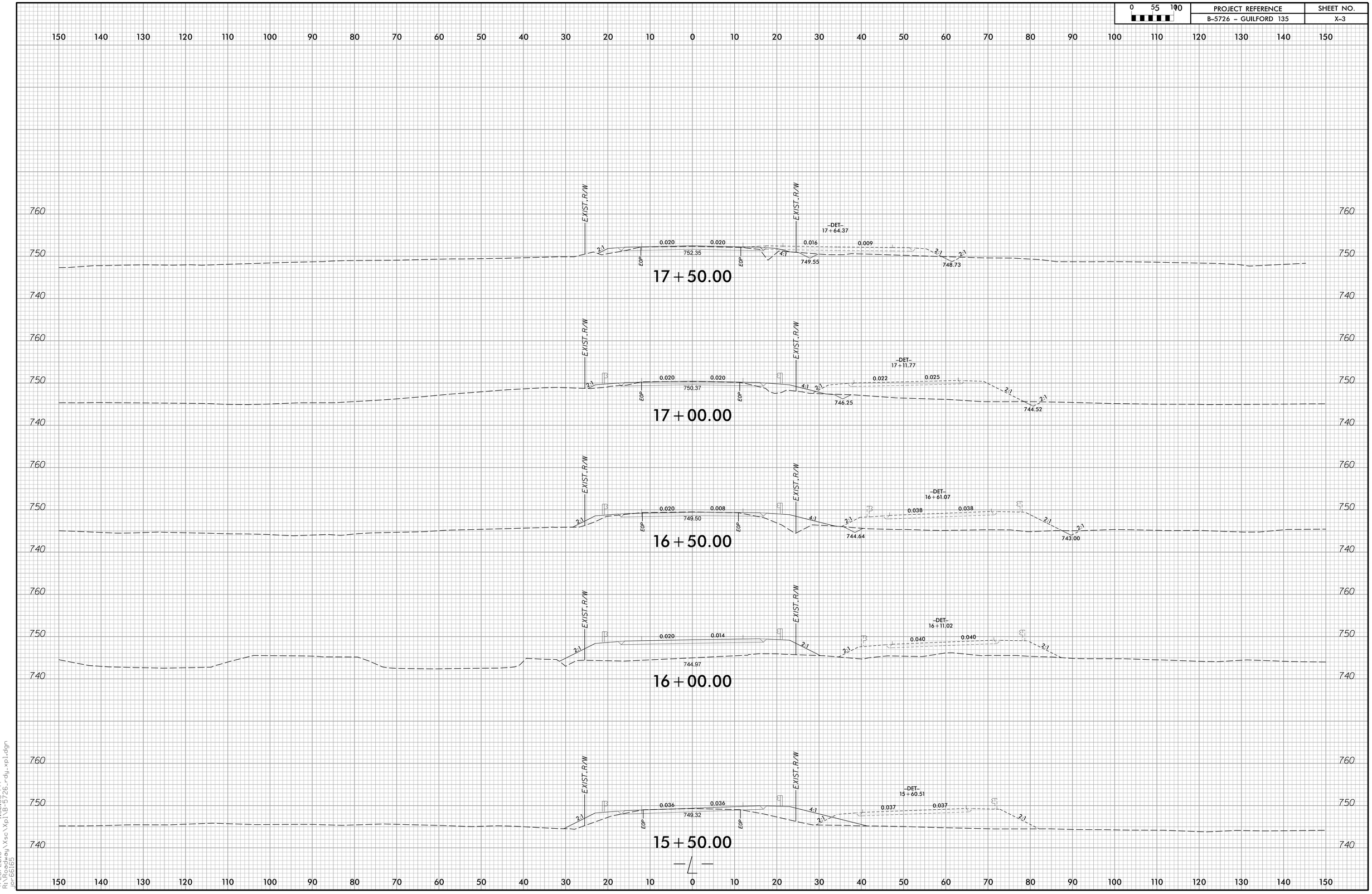

4/26/2018 1:30:53 PM
R:\Roadway\Xsc\Xpl\B-5726_rdy_xpl.dgn
jor6165

PROJECT REFERENCE	SHEET NO.
B-5726 - GUILFORD 135	X-4

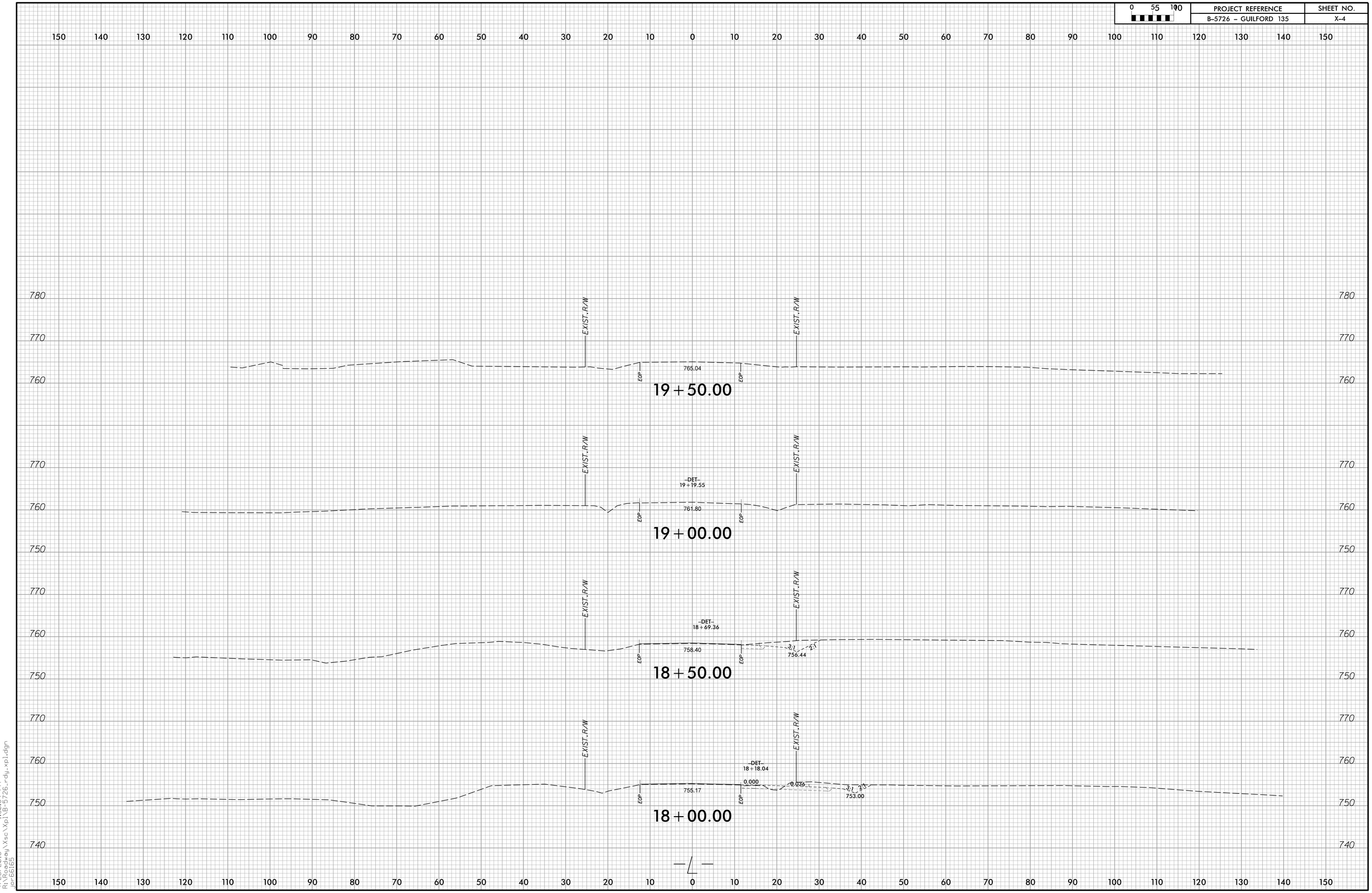

4/26/2018
R:\Roadway\Xsc\Xpl\B-5726_rdy_xpl.dgn
1:30:54 PM
jor-66165

DocuSign Envelope ID: EE978408-8E8C-4951-85BD-145278E6E8D9

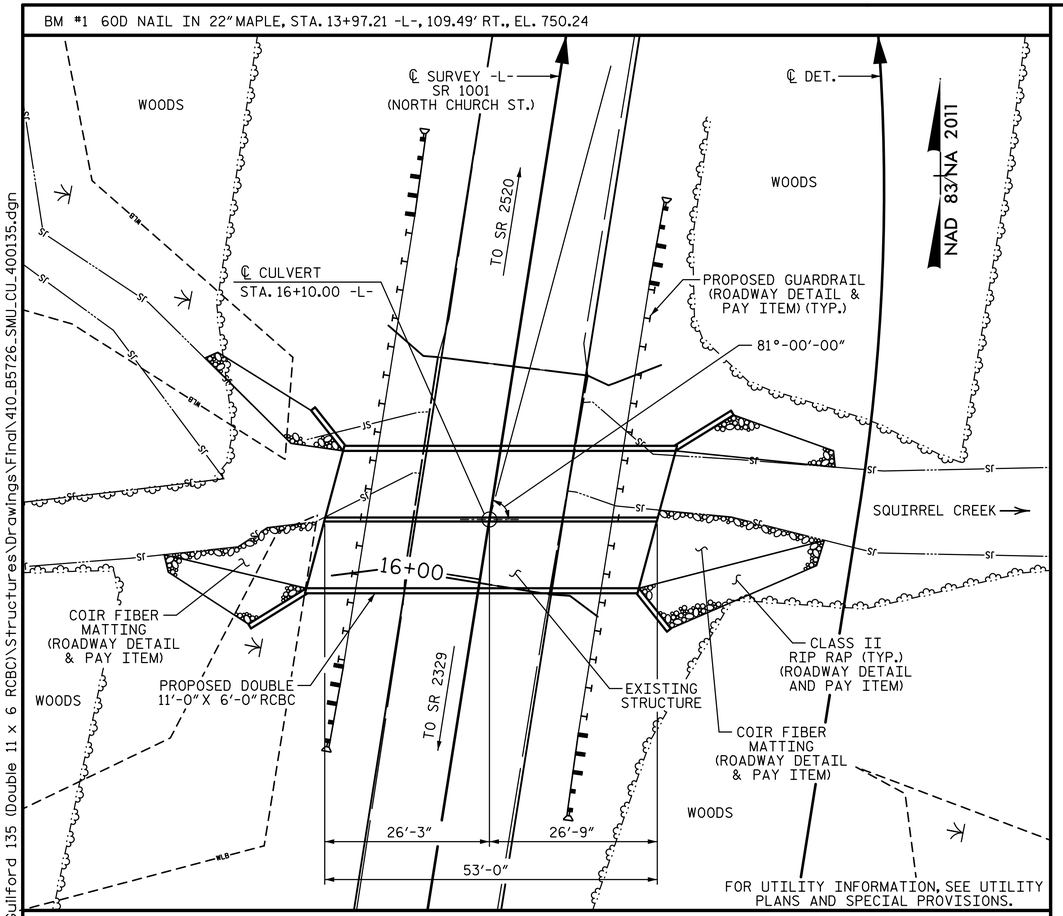

LOCATION SKETCH

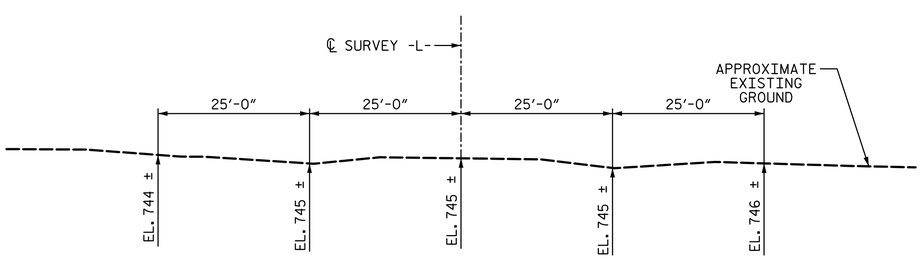

PROFILE ALONG ℄ CULVERT

HYDRAULIC DATA:

DESIGN DISCHARGE	= 1180 CFS
FREQUENCY OF DESIGN FLOOD	= 50 YEAR
DESIGN HIGH WATER ELEVATION	= 750.00
DRAINAGE AREA	= 1.55 SQ. MI.
BASE DISCHARGE (Q 100)	= 1550 CFS
BASE HIGH WATER ELEVATION	= 750.60

OVERTOPPING FLOOD DATA:

OVERTOPPING DISCHARGE	= 1050 CFS
FREQUENCY OF OVERTOPPING FLOOD	= 25+ YEAR
OVERTOPPING FLOOD ELEVATION	= 749.30 ✱✱

✱✱ OVERTOPPING OCCURS AT ROADWAY STA. 16+29.00 -L- AT ROADWAY HIGH (RIGHT) SIDE

HORIZONTAL CURVE DATA

PI STA. 14+79.17 -L-
Δ = 4°-57'-56.3" (LT.)
D = 3°-49'-11.0"
L = 130.00'
T = 65.04'
R = 1,500.00'

GRADE DATA:

GRADE POINT EL. @ STA. 16+10.00 -L- = EL. 749.27
BED EL. @ STA. 16+10.00 -L- = 740.82
ROADWAY SLOPE 2:1

TOTAL STRUCTURE QUANTITIES

CLASS A CONCRETE		
BARREL @	2.705 CY/FT	143.4 C.Y.
HEADWALLS		2.3 C.Y.
SILLS		2.5 C.Y.
WING ETC.		17.0 C.Y.
TOTAL		165.2 C.Y.
REINFORCING STEEL		
BARREL		18,935 LBS.
WINGS ETC.		934 LBS.
TOTAL		19,869 LBS.
CULVERT EXCAVATION		LUMP SUM
FOUNDATION CONDITIONING MATERIAL		318 TONS
REMOVAL OF EXISTING STRUCTURE		LUMP SUM
ASBESTOS ASSESSMENT		LUMP SUM

FOUNDATION NOTES:

CONSTRUCT THE REINFORCED CONCRETE BOX CULVERT AT STATION 16+10.00 -L- WITH 1.0 INCH OF CAMBER TO ACCOUNT FOR ANTICIPATED SETTLEMENT.

EXCAVATE FOUNDATION A MINIMUM OF 3.0 FEET BELOW CULVERT BEARING ELEVATION.

INSTALL GEOTEXTILE FOR SOIL STABILIZATION, TYPE 4, TO A MINIMUM DISTANCE OF TWO FEET BEYOND THE EXTENTS OF THE CULVERT FOUNDATION IN ACCORDANCE WITH SECTION 270 OF THE STANDARD SPECIFICATIONS, EXCEPT PAYMENT FOR TYPE 4 GEOTEXTILE IS INCLUDED IN THE PRICE BID FOR FOUNDATION CONDITIONING MATERIAL.

PLACE 3.0 FEET OF CLASS VI FOUNDATION CONDITIONING MATERIAL IN ACCORDANCE WITH SECTION 414 OF THE STANDARD SPECIFICATIONS.

NOTES:

ASSUMED LIVE LOAD ----------HL-93 OR ALTERNATE LOADING.

DESIGN FILL---------- 1'-3" (MIN.) AND 2'-9" (MAX.)

FOR OTHER DESIGN DATA AND NOTES SEE STANDARD NOTE SHEET.

3" Ø WEEP HOLES INDICATED TO BE IN ACCORDANCE WITH THE SPECIFICATIONS.

CONCRETE IN CULVERTS TO BE POURED IN THE FOLLOWING ORDER:
1. WING FOOTINGS AND FLOOR SLAB INCLUDING 4" OF ALL VERTICAL WALLS.
2. THE REMAINING PORTIONS OF THE WALLS AND WINGS FULL HEIGHT FOLLOWED BY ROOF SLAB AND HEADWALLS.

THE ENGINEER SHALL CHECK THE LENGTH OF CULVERT BEFORE STAKING IT OUT TO MAKE CERTAIN THAT IT WILL PROPERLY TAKE CARE OF THE FILL.

DIMENSIONS FOR WING LAYOUT AS WELL AS ADDITIONAL REINFORCING STEEL EMBEDDED IN BARREL ARE SHOWN ON WING SHEET.

STEEL IN THE BOTTOM SLAB MAY BE SPLICED AT THE PERMITTED CONSTRUCTION JOINT AT THE CONTRACTOR'S OPTION. EXTRA WEIGHT OF STEEL DUE TO THE SPLICES SHALL BE PAID FOR BY THE CONTRACTOR.

AT THE CONTRACTOR'S OPTION, HE MAY SPLICE THE VERTICAL REINFORCING STEEL IN THE INTERIOR FACE OF EXTERIOR WALL AND BOTH FACES OF INTERIOR WALLS ABOVE LOWER WALL CONSTRUCTION JOINT. THE SPLICE LENGTH SHALL BE AS PROVIDED IN THE SPLICE LENGTH CHART SHOWN ON THE PLANS. EXTRA WEIGHT OF STEEL DUE TO THE SPLICES SHALL BE PAID FOR BY THE CONTRACTOR.

REMOVAL OF THE EXISTING BRIDGE SHALL BE PERFORMED IN A MANNER THAT PREVENTS DEBRIS FROM FALLING INTO THE WATER. THE CONTRACTOR SHALL SUBMIT DEMOLITION PLANS FOR REVIEW AND REMOVE THE BRIDGE IN ACCORDANCE WITH ARTICLE 402-2 OF THE STANDARD SPECIFICATIONS.

THE EXISTING STRUCTURE CONSISTS OF 2 SPANS, 1 @ 18'-0" AND 1 @ 17'-6" WITH A CLEAR ROADWAY WIDTH OF 24'-4". THE SUPERSTRUCTURE CONSISTS OF A TIMBER DECK ON CONTINUOUS STEEL I-BEAMS. END BENTS CONSIST OF TIMBER CAPS AND PILES. INTERIOR BENT CONSISTS OF STEEL CAP AND PILES. THE EXISTING STRUCTURE, WHICH IS LOCATED AT THE SITE OF THE PROPOSED STRUCTURE, SHALL BE REMOVED. THE EXISTING BRIDGE IS PRESENTLY NOT POSTED FOR LOAD LIMIT. SHOULD THE STRUCTURAL INTEGRITY OF THE BRIDGE DETERIORATE DURING CONSTRUCTION OF THE PROPOSED BRIDGE, A LOAD LIMIT MAY BE POSTED AND MAY BE REDUCED AS NECESSARY DURING THE LIFE OF THE PROJECT.

FOR CULVERT DIVERSION DETAILS AND PAY ITEM, SEE EROSION CONTROL PLANS.

FOR SUBMITTAL OF WORKING DRAWINGS, SEE SPECIAL PROVISIONS.

FOR FALSEWORK AND FORMWORK, SEE SPECIAL PROVISIONS.

FOR CRANE SAFETY, SEE SPECIAL PROVISIONS.

FOR GROUT FOR STRUCTURES, SEE SPECIAL PROVISIONS.

A 3 FOOT STRIP OF FILTER FABRIC SHALL BE ATTACHED TO THE FILL FACE OF THE WING COVERING THE ENTIRE LENGTH OF THE EXPANSION JOINT.

FOR ASBESTOS ASSESSMENT FOR BRIDGE DEMOLITION AND RENOVATION ACTIVITIES, SEE SPECIAL PROVISIONS.

CULVERT MUST BE CAST-IN-PLACE, PRECAST OPTION WILL NOT BE ALLOWED.

INASMUCH AS THE PAINT SYSTEM ON THE EXISTING STRUCTURAL STEEL CONTAINS LEAD, THE CONTRACTOR'S ATTENTION IS DIRECTED TO ARTICLE 107-1 OF THE STANDARD SPECIFICATIONS. ANY COST RESULTING FROM COMPLIANCE WITH APPLICABLE STATE OR FEDERAL REGULATIONS PERTAINING TO HANDLING OF MATERIALS CONTAINING LEAD BASED PAINT SHALL BE INCLUDED IN THE BID PRICE FOR REMOVAL OF EXISTING STRUCTURE AT STATION 16+10.00 -L-.

NO WORK SHALL BE DONE ON THE CULVERT AT STA. 16+10.00 -L- UNTIL THE AREA OF THE BOX CULVERT HAS BEEN UNDERCUT A MINIMUM OF 3.0 FEET BELOW CULVERT BEARING ELEVATION AND UNSUITABLE MATERIAL REPLACED WITH SUITABLE MATERIAL, PROPERLY COMPACTED TO THE ELEVATION OF THE BOTTOM OF THE PROPOSED FLOOR SLAB. THE LIMITS OF THIS UNDERCUT EXCAVATION SHALL BE AT LEAST THE LIMITS OF THE BOX CULVERT INCLUDING THE WINGS. NO SEPARATE PAYMENT WILL BE MADE FOR ANY TEMPORARY SHEETING, UNDERCUT, OR UNSUITABLE MATERIAL REPLACEMENT AS REQUIRED TO CONSTRUCT THE PROPOSED CULVERT. PAYMENT IS INCLUDED IN THE LUMP SUM PRICE FOR CULVERT EXCAVATION.

I HEREBY CERTIFY THESE PLANS ARE THE AS-BUILT PLANS

PROJECT NO. B-5726
GUILFORD COUNTY
STATION: 16+10.00 -L-

SHEET 1 OF 6 REPLACES BRIDGE #135

STATE OF NORTH CAROLINA
DEPARTMENT OF TRANSPORTATION
RALEIGH

DOUBLE 11 FT. X 6 FT. CONCRETE BOX CULVERT

81° SKEW

PLANS PREPARED BY:
SIMPSON ENGINEERS & ASSOCIATES
5640 Dillard Drive
Suite 200
Cary, NC 27518
(919) 852-0468
(919) 852-0598 (Fax)
www.simpsonengr.com
LICENSURE NO. C-2521

NORTH CAROLINA PROFESSIONAL SEAL 11268 ENGINEER BETSY S. COX
4/24/2018

DOCUMENT NOT CONSIDERED FINAL UNLESS ALL SIGNATURES COMPLETED

REVISIONS								SHEET NO.
NO.	BY:	DATE:	NO.	BY:	DATE:			C1-1
1			3					TOTAL SHEETS
2			4					6

DRAWN BY: S.D. COOPER DATE: 4-18
CHECKED BY: B.S. COX DATE: 4-18
DESIGN ENGINEER OF RECORD: B.S. COX DATE: 4-18

4/24/2018 11:23:35 AM G:\Projects\2016\Division 7 TIP (Mott Macdonald)\B-5726 Guilford 135 (Double 11 x 6 RCBC)\Structures\Drawings\Final\410_B5726_SMU_CU_400135.dgn

DocuSign Envelope ID: EE978408-8E8C-4951-85BD-145278E6E8D9

4/24/2018 11:23:35 AM G:\Projects\2016\Division 7 TIP (Mott Macdonald)\B-5726 Guilford 135 (Double 11 x 6 RCBC)\Structures\Drawings\Final\410_B5726_SMU_CU_400135.dgn

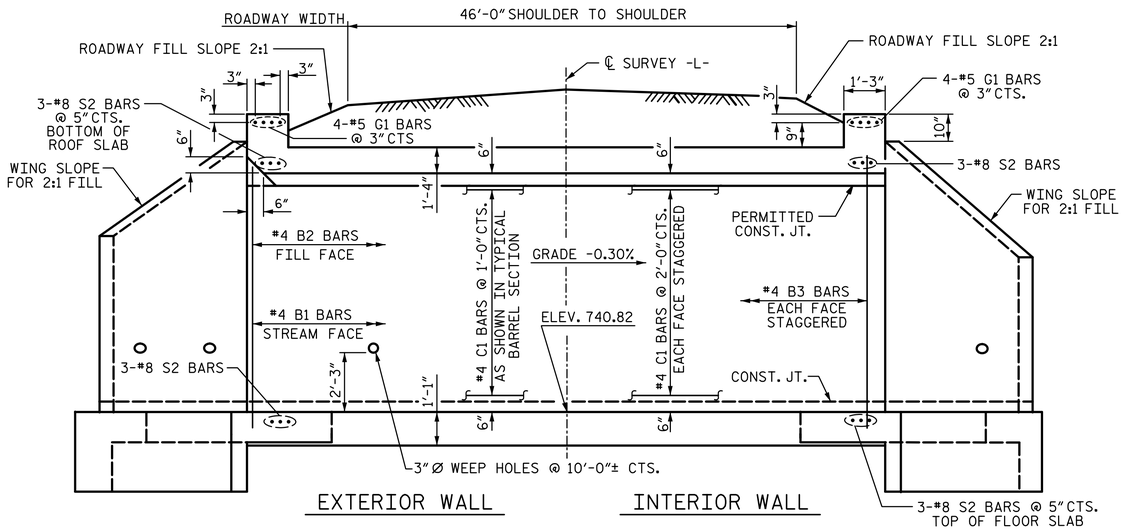

CULVERT SECTION NORMAL TO ROADWAY

(CONCRETE SILLS NOT SHOWN)

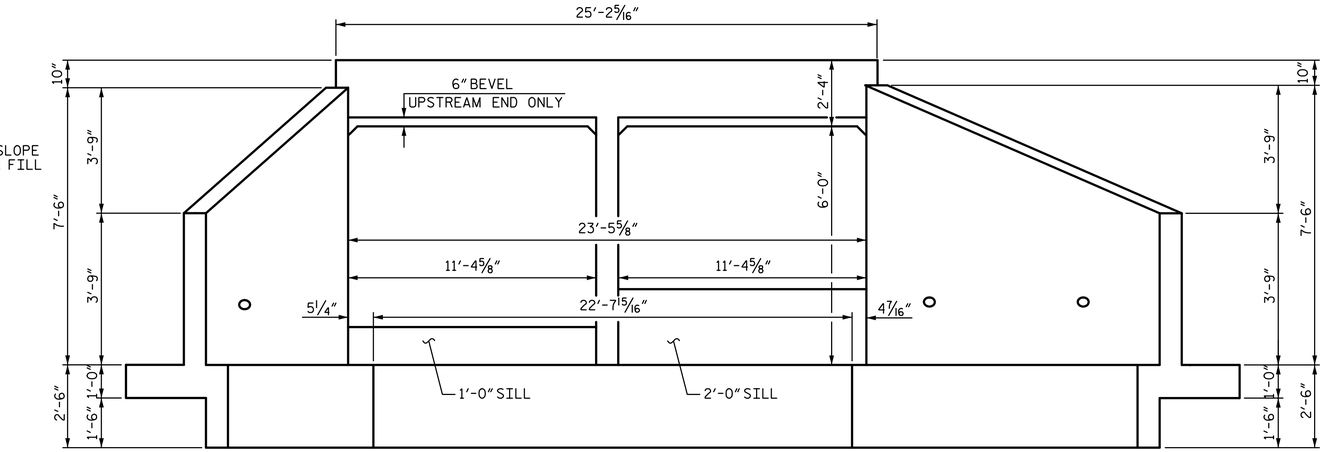

END ELEVATION NORMAL TO SKEW

(UP STREAM END SHOWN, DOWNSTREAM END SIMILAR)

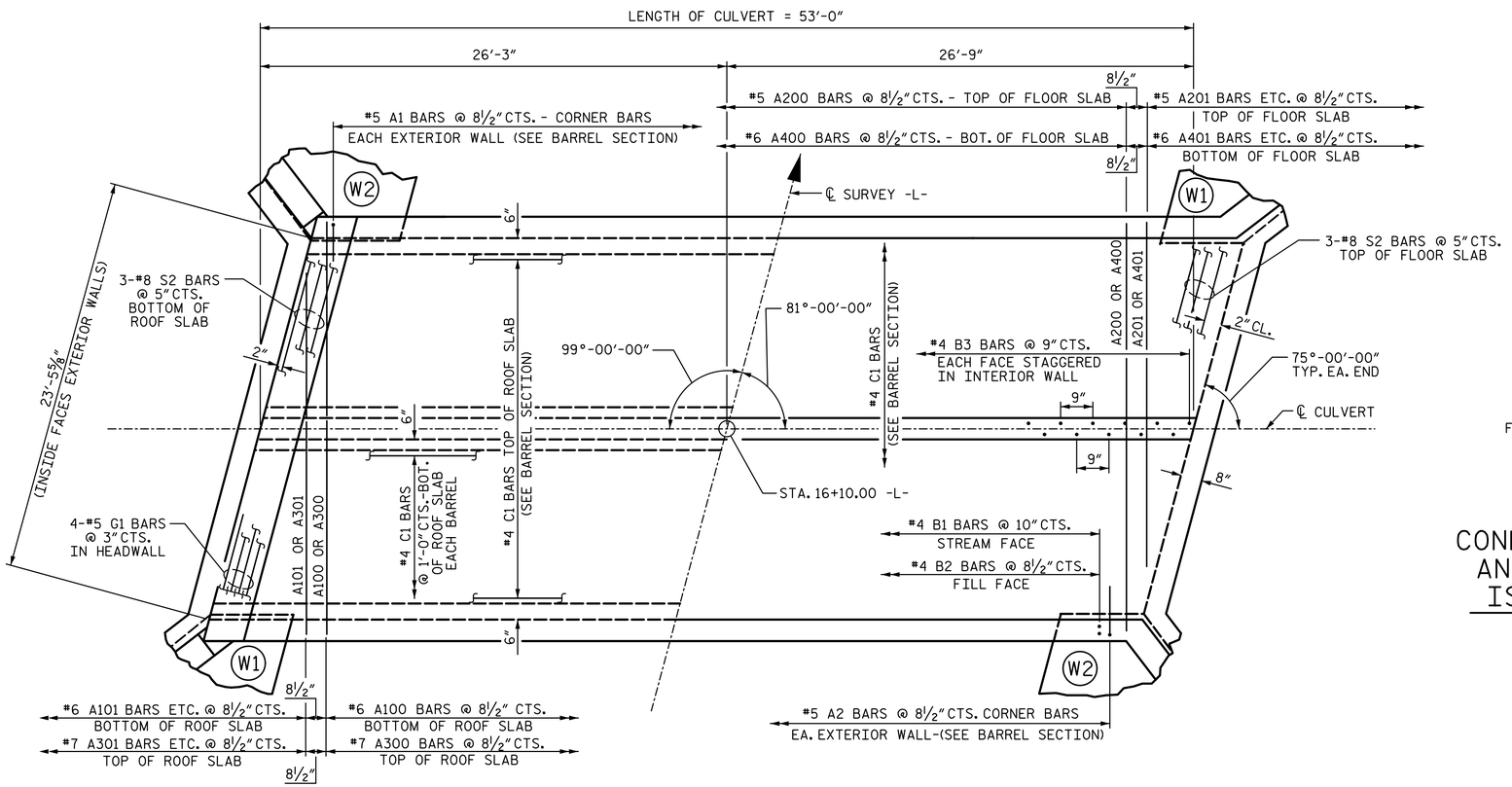

PART PLAN - ROOF SLAB PART PLAN - FLOOR SLAB

(C1 BARS ARE 2 BAR RUNS) (CONCRETE SILLS NOT SHOWN FOR CLARITY)

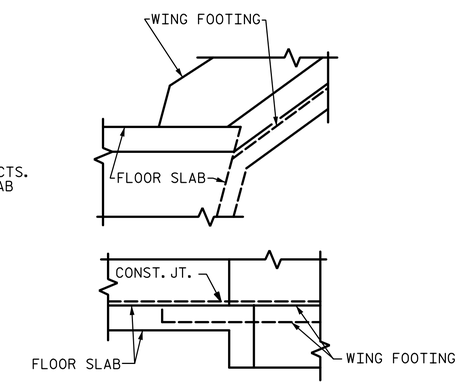

DETAIL

CONNECTION OF WING FOOTING AND FLOOR SLAB WHEN SLAB IS THICKER THAN FOOTING

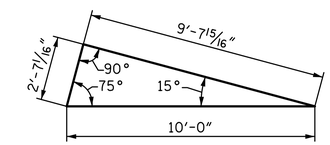

SKEW TRIANGLE

I HEREBY CERTIFY THESE PLANS ARE THE AS-BUILT PLANS

PROJECT NO. B-5726

GUILFORD COUNTY

STATION: 16+10.00 -L-

SHEET 2 OF 6

STATE OF NORTH CAROLINA
DEPARTMENT OF TRANSPORTATION
RALEIGH

DOUBLE 11 FT. X 6 FT. CONCRETE BOX CULVERT

81° SKEW

REVISIONS						SHEET NO.
NO.	BY:	DATE:	NO.	BY:	DATE:	C1-2
1			3			TOTAL SHEETS
2			4			6

PLANS PREPARED BY:

SIMPSON ENGINEERS & ASSOCIATES
5640 Dillard Drive
Suite 200
Cary, NC 27518
(919) 852-0468
(919) 852-0598 (Fax)
www.simpsonengr.com
LICENSURE NO. C-2521

NORTH CAROLINA PROFESSIONAL SEAL 11268 ENGINEER BETSY S. COX
4/24/2018

DOCUMENT NOT CONSIDERED FINAL UNLESS ALL SIGNATURES COMPLETED

DRAWN BY:	S.D. COOPER	DATE:	4-18
CHECKED BY:	B.S. COX	DATE:	4-18
DESIGN ENGINEER OF RECORD:	B.S. COX	DATE:	4-18

DocuSign Envelope ID: EE978408-8E8C-4951-85BD-145278E6E8D9

4/24/2018 11:23:35 AM G:\Projects\2016\Division 7 TIP (Mott Macdonald)\B-5726 Guilford 135 (Double 11 x 6 RCBC)\Structures\Drawings\Final\410_B5726_SMU_CU_400135.dgn

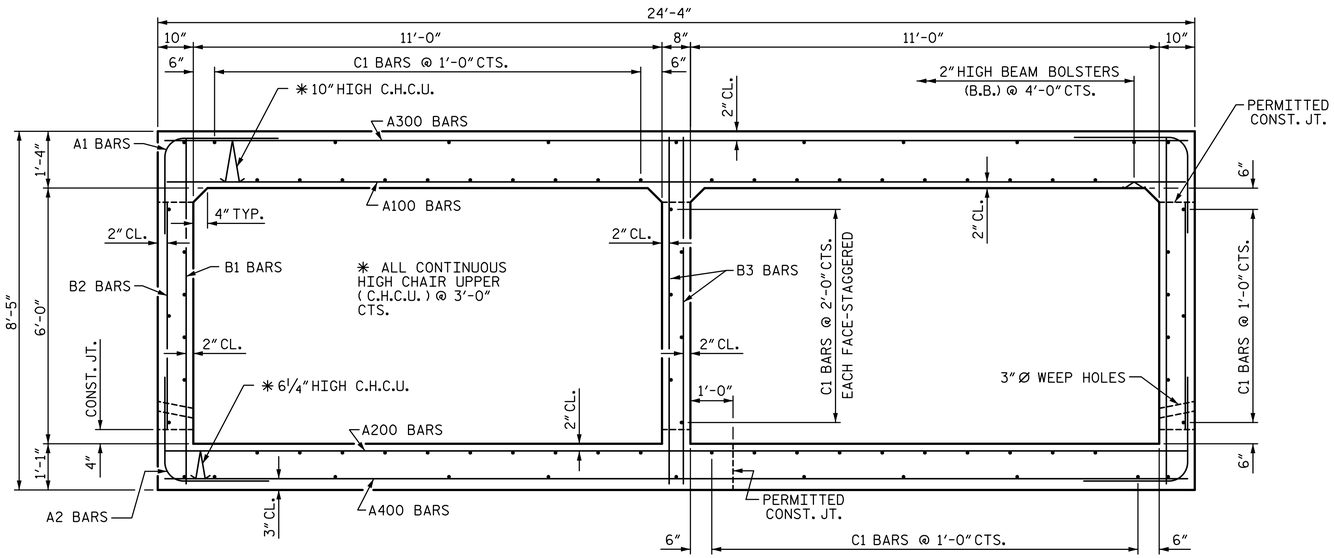

SECTION OF BARREL

(THERE ARE 82 "C" BARS IN SECTION OF BARREL)

BAR TYPES

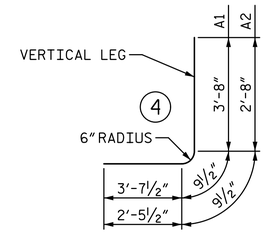

ALL BAR DIMENSIONS ARE OUT TO OUT

SPLICE CHART

- #4 B1 SPLICE LENGTH = 1'-9"
- #4 B3 SPLICE LENGTH = 1'-9"
- #4 C1 SPLICE LENGTH = 1'-11"
- #5 A200 SPLICE LENGTH = 2'-2"
- #6 A400 SPLICE LENGTH = 2'-3"

BILL OF MATERIAL

BAR	NO.	SIZE	TYPE	LENGTH	WEIGHT
A1	150	#5	4	8'-1"	1265
A2	150	#5	4	5'-11"	926
A100	66	#6	STR	23'-11"	2371
A101	2	#6	STR	20'-10"	63
A102	2	#6	STR	18'-3"	55
A103	2	#6	STR	15'-7"	47
A104	2	#6	STR	12'-11"	39
A105	2	#6	STR	10'-4"	31
A106	2	#6	STR	7'-8"	23
A107	2	#6	STR	5'-0"	15
A108	2	#6	STR	2'-4"	7
A200	66	#5	STR	23'-11"	1646
A201	2	#5	STR	20'-10"	43
A202	2	#5	STR	18'-3"	38
A203	2	#5	STR	15'-7"	33
A204	2	#5	STR	12'-11"	27
A205	2	#5	STR	10'-4"	22
A206	2	#5	STR	7'-8"	16
A207	2	#5	STR	5'-0"	10
A208	2	#5	STR	2'-4"	5
A300	66	#7	STR	23'-11"	3226
A301	2	#7	STR	20'-10"	85
A302	2	#7	STR	18'-3"	75
A303	2	#7	STR	15'-7"	64
A304	2	#7	STR	12'-11"	53
A305	2	#7	STR	10'-4"	42
A306	2	#7	STR	7'-8"	31
A307	2	#7	STR	5'-0"	20
A308	2	#7	STR	2'-4"	10

BILL OF MATERIAL

BAR	NO.	SIZE	TYPE	LENGTH	WEIGHT
A400	66	#6	STR	23'-11"	2371
A401	2	#6	STR	20'-10"	63
A402	2	#6	STR	18'-3"	55
A403	2	#6	STR	15'-7"	47
A404	2	#6	STR	12'-11"	39
A405	2	#6	STR	10'-4"	31
A406	2	#6	STR	7'-8"	23
A407	2	#6	STR	5'-0"	15
A408	2	#6	STR	2'-4"	7
B1	128	#4	STR	7'-11"	677
B2	150	#4	STR	5'-4"	534
B3	142	#4	STR	7'-11"	751
C1	164	#4	STR	27'-4"	2994
D1	6	#6	STR	2'-7"	23
D2	6	#6	STR	1'-7"	14
G1	8	#5	STR	24'-10"	207
S2	12	#8	STR	24'-10"	796
TOTAL REINFORCING STEEL					18935 LB

CLASS A CONCRETE BREAKDOWN	
BARREL	143.4 CY
HEADWALLS	2.3 CY
SILLS	2.5 CY

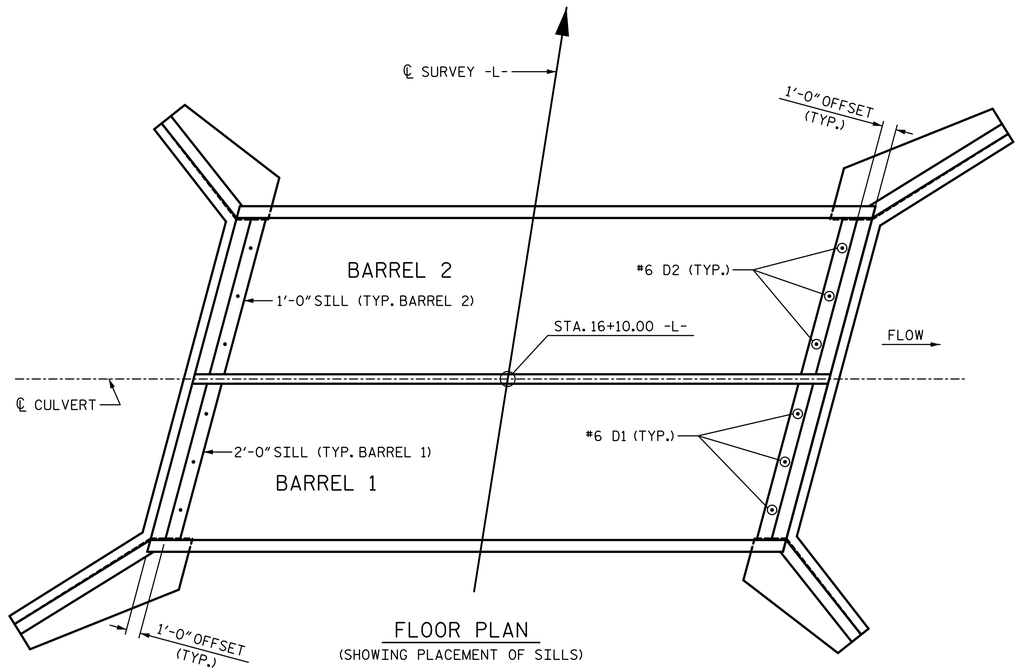

FLOOR PLAN

(SHOWING PLACEMENT OF SILLS)

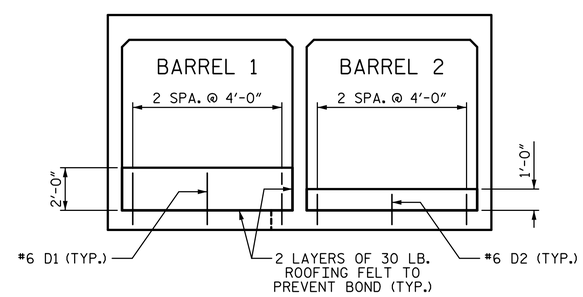

ELEVATION - LOOKING UPSTREAM

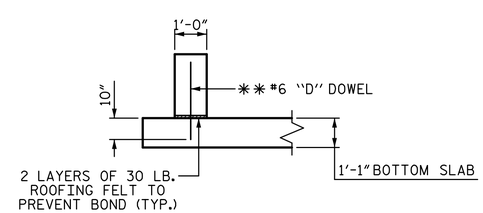

SECTION THROUGH SILL

✱✱ DOWELS MAY BE PUSHED INTO GREEN CONCRETE AFTER SLAB HAS BEEN FLOAT FINISHED.

CULVERT SILL DETAILS

BACKFILL BARREL 1 WITH 2'-0" OF NATIVE MATERIALS
BACKFILL BARREL 2 WITH 1'-0" OF NATIVE MATERIALS
(SEE CULVERT SURVEY AND HYDRAULIC DESIGN REPORT FOR DESCRIPTION OF AND PLACEMENT OF NATIVE MATERIALS.)

I HEREBY CERTIFY THESE PLANS ARE THE AS-BUILT PLANS

PROJECT NO. B-5726
GUILFORD COUNTY
STATION: 16+10.00 -L-

SHEET 3 OF 6

STATE OF NORTH CAROLINA
DEPARTMENT OF TRANSPORTATION
RALEIGH

DOUBLE 11FT. X 6 FT. CONCRETE BOX CULVERT

81° SKEW

PLANS PREPARED BY:

SIMPSON ENGINEERS & ASSOCIATES
5640 Dillard Drive
Suite 200
Cary, NC 27518
(919) 852-0468
(919) 852-0598 (Fax)
www.simpsonengr.com
LICENSURE NO. C-2521

NORTH CAROLINA PROFESSIONAL SEAL 11268 ENGINEER BETSY S. COX
4/24/2018

DOCUMENT NOT CONSIDERED FINAL UNLESS ALL SIGNATURES COMPLETED

REVISIONS								
NO.	BY:	DATE:	NO.	BY:	DATE:	SHEET NO. C1-3
1			3			TOTAL SHEETS 6
2			4			

DRAWN BY:	S.D. COOPER	DATE:	4-18
CHECKED BY:	B.S. COX	DATE:	4-18
DESIGN ENGINEER OF RECORD:	B.S. COX	DATE:	4-18

DocuSign Envelope ID: EE978408-8E8C-4951-85BD-145278E6E8D9

4/24/2018 11:23:35 AM G:\Projects\2016\Division 7 TIP (Mott Macdonald)\B-5726 Guilford 135 (Double 11 x 6 RCBC)\Structures\Drawings\Final\410_B5726_SMU_CU_400135.dgn

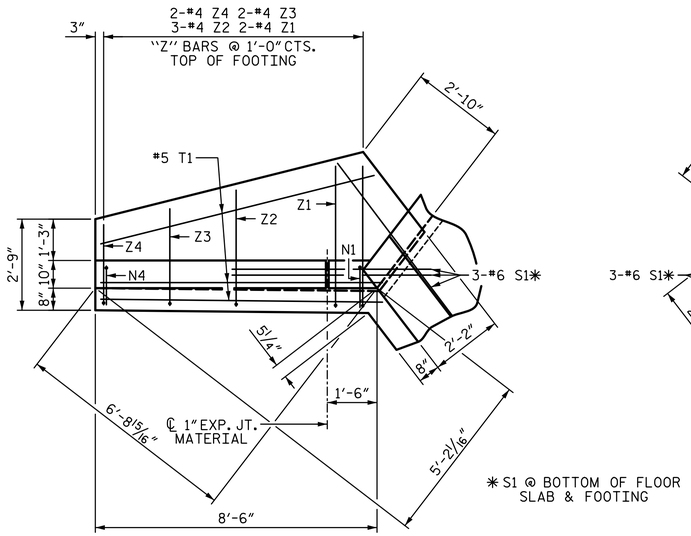

✱ S1 @ BOTTOM OF FLOOR SLAB & FOOTING

PLAN W2

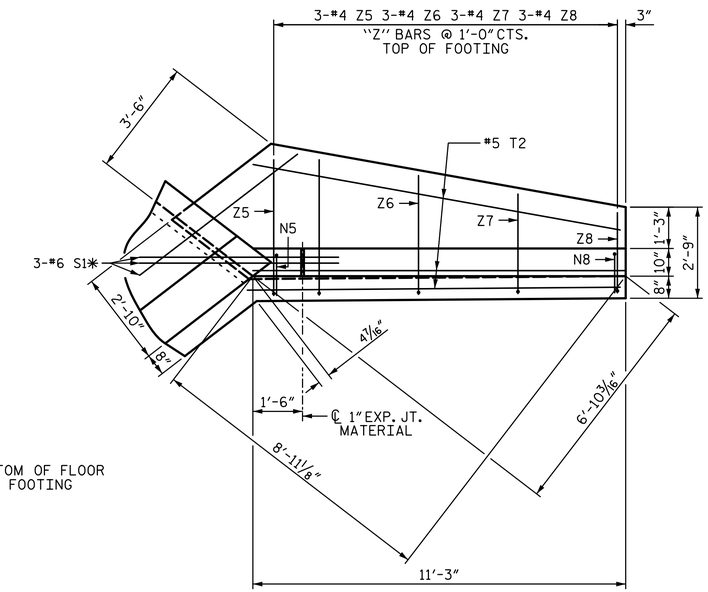

PLAN W1

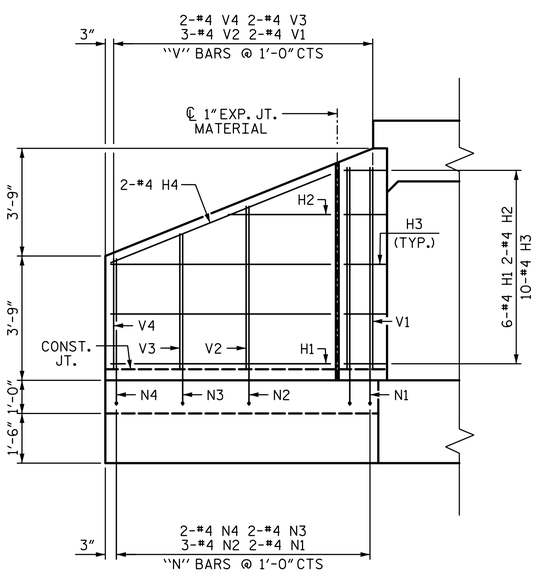

ELEVATION W2

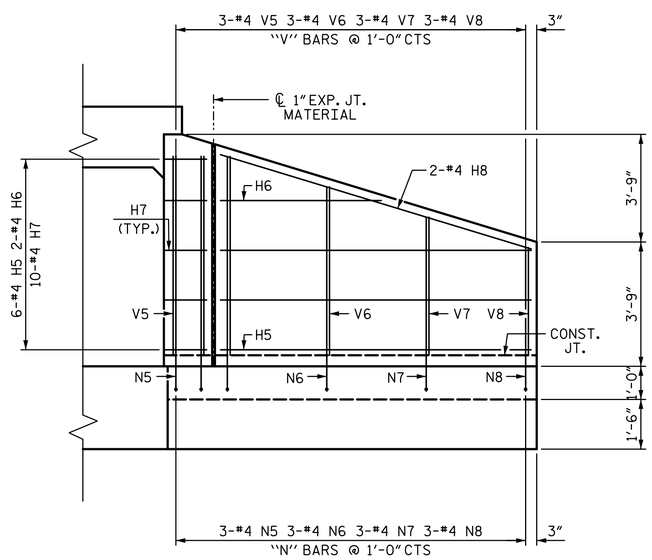

ELEVATION W1

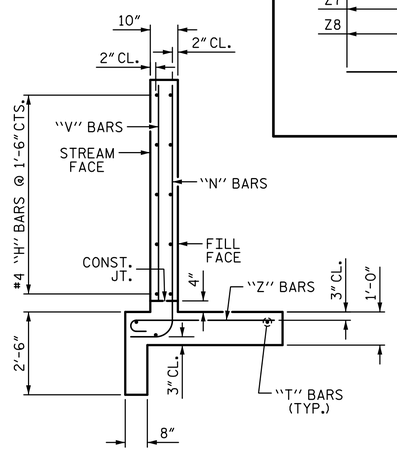

TYPICAL WING SECTION

BAR TYPES

ALL BAR DIMENSIONS ARE OUT TO OUT.

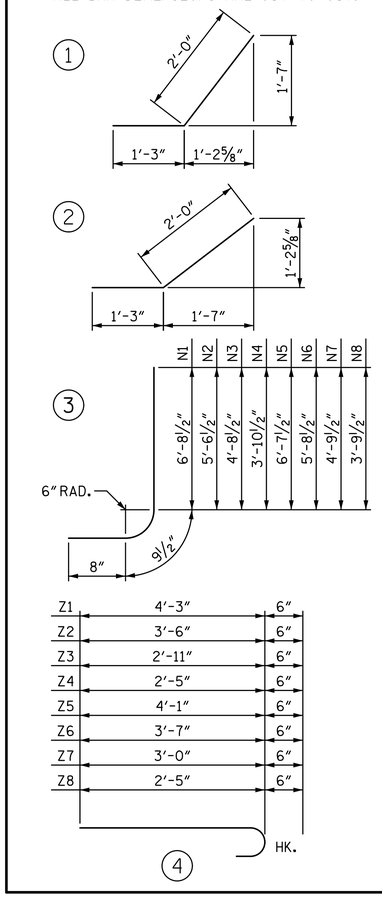

BILL OF MATERIAL

BAR	NO.	SIZE	TYPE	LENGTH	WEIGHT
H1	12	#4	STR	6'-7"	53
H2	4	#4	STR	3'-1"	8
H3	20	#4	1	3'-3"	43
H4	4	#4	STR	7'-1"	19
H5	12	#4	STR	9'-4"	75
H6	4	#4	STR	4'-10"	13
H7	20	#4	2	3'-3"	43
H8	4	#4	STR	9'-9"	26
N1	4	#4	3	8'-2"	22
N2	6	#4	3	7'-1"	28
N3	4	#4	3	6'-2"	16
N4	4	#4	3	5'-4"	14
N5	6	#4	3	8'-1"	32
N6	6	#4	3	7'-2"	29
N7	6	#4	3	6'-3"	25
N8	6	#4	3	5'-3"	21
S1	12	#6	STR	6'-0"	108
T1	6	#5	STR	8'-6"	53
T2	6	#5	STR	11'-3"	70
V1	4	#4	STR	6'-1"	16
V2	6	#4	STR	4'-11"	20
V3	4	#4	STR	4'-1"	11
V4	4	#4	STR	3'-4"	9
V5	6	#4	STR	6'-0"	24
V6	6	#4	STR	5'-1"	20
V7	6	#4	STR	4'-2"	17
V8	6	#4	STR	3'-3"	13
Z1	4	#4	4	4'-9"	13
Z2	6	#4	4	4'-0"	16
Z3	4	#4	4	3'-5"	9
Z4	4	#4	4	2'-11"	8
Z5	6	#4	4	4'-7"	18
Z6	6	#4	4	4'-1"	16
Z7	6	#4	4	3'-6"	14
Z8	6	#4	4	2'-11"	12

REINFORCING STEEL FOR 4 WINGS 934 LBS

CLASS A CONCRETE
4 WINGS 14.2 CY
2 END CURTAIN WALLS 2.8 CY
TOTAL 17.0 CY

PROJECT NO. B-5726
GUILFORD COUNTY
STATION: 16+10.00 -L-

SHEET 4 OF 6

STATE OF NORTH CAROLINA
DEPARTMENT OF TRANSPORTATION
RALEIGH

WINGS FOR CONCRETE BOX CULVERT

H = 6'-0" SLOPE = 2:1

75° SKEW

PLANS PREPARED BY:
SIMPSON ENGINEERS & ASSOCIATES
5640 Dillard Drive
Suite 200
Cary, NC 27518
(919) 852-0468
(919) 852-0598 (Fax)
www.simpsonengr.com
LICENSURE NO. C-2521

NORTH CAROLINA PROFESSIONAL SEAL 11268 ENGINEER BETSY S. COX
4/24/2018

DOCUMENT NOT CONSIDERED FINAL UNLESS ALL SIGNATURES COMPLETED

REVISIONS						
NO.	BY:	DATE:	NO.	BY:	DATE:	
1			3			
2			4			

SHEET NO. C1-4
TOTAL SHEETS 6

DRAWN BY: S.D. COOPER DATE: 4-18
CHECKED BY: B.S. COX DATE: 4-18
DESIGN ENGINEER OF RECORD: B.S. COX DATE: 4-18

DocuSign Envelope ID: EE978408-8E8C-4951-85BD-145278E6E8D9

4/24/2018 11:23:36 AM G:\Projects\2016\Division 7 TIP (Mott Macdonald)\B-5726 Guilford 135 (Double 11 x 6 RCBC)\Structures\Drawings\Final\410_B5726_SMU_CU_400135.dgn

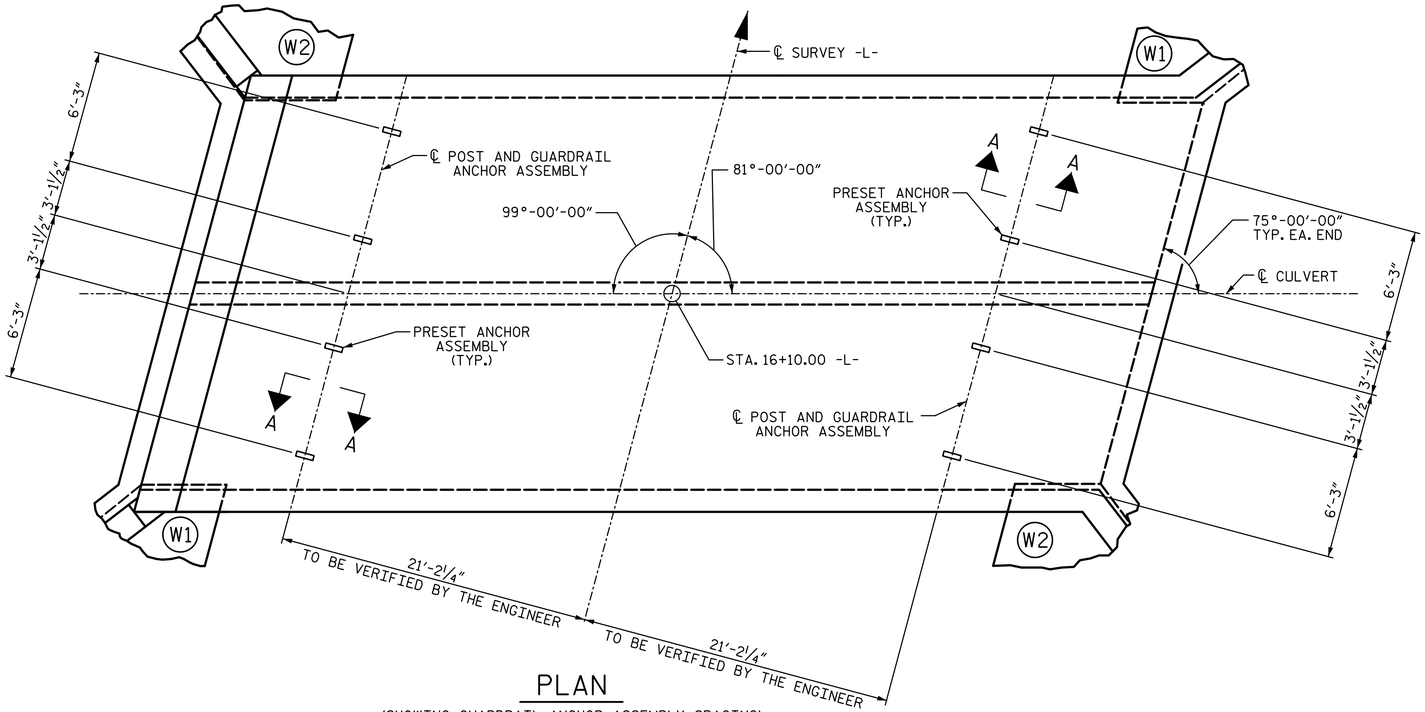

PLAN

(SHOWING GUARDRAIL ANCHOR ASSEMBLY SPACING)

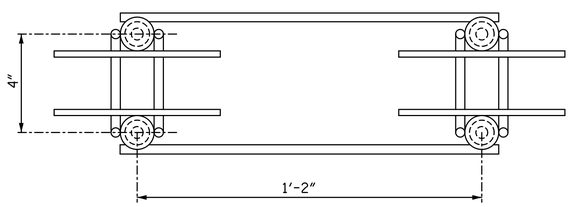

PLAN

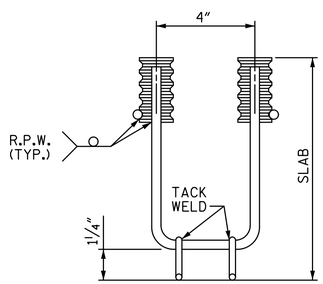

ELEVATION

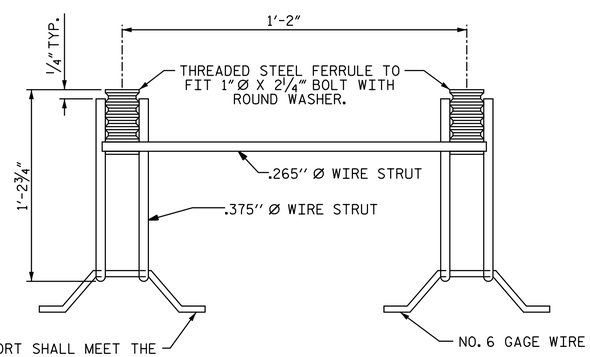

SIDE VIEW

GUARDRAIL ANCHOR ASSEMBLY FOR CULVERTS

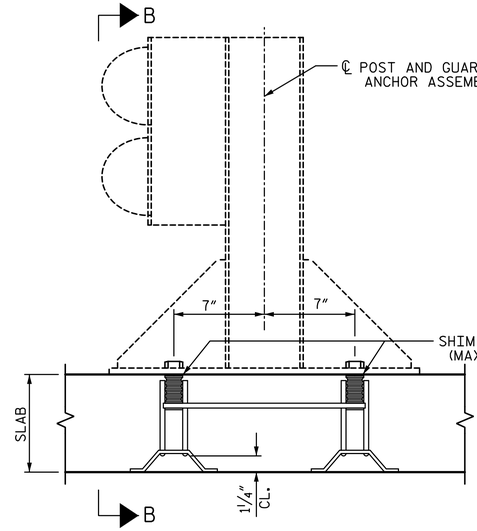

SECTION A-A

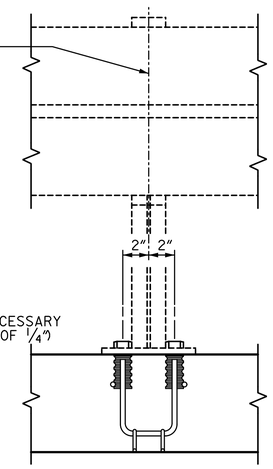

SECTION B-B

NOTES:

THE GUARDRAIL ANCHOR ASSEMBLY FOR CULVERTS SHALL CONSIST OF THE FOLLOWING COMPONENTS :

A. FERRULES SHALL BE MADE FROM STEEL MEETING THE REQUIREMENTS OF AASHTO M169, GRADE 12L14 AND SHALL HAVE A MINIMUM LENGTH OF THREADS OF 2½″.

B. 4 - 1″Ø X 2¼″ BOLTS WITH WASHERS, BOLTS SHALL CONFORM TO THE REQUIREMENTS OF ASTM A307. BOLTS AND WASHERS SHALL BE GALVANIZED. (AT THE CONTRACTOR'S OPTION, STAINLESS STEEL BOLTS AND WASHERS MAY BE USED AS AN ALTERNATE FOR THE 1″Ø X 2¼″ GALVANIZED BOLTS AND WASHERS. THEY SHALL CONFORM TO OR EXCEED THE MECHANICAL REQUIREMENTS OF ASTM A307. THE USE OF THIS ALTERNATE SHALL BE APPROVED BY THE ENGINEER.)

C. WIRE STRUTS SHOWN IN THE GUARDRAIL ANCHOR ASSEMBLY FOR CULVERTS DETAIL ARE MINIMUM ALLOWABLE SIZE AND SHALL HAVE A MINIMUM TENSILE STRENGTH OF 100,000 P.S.I. AS AN OPTION, A 7/16″Ø WIRE STRUT WITH A MINIMUM TENSILE STRENGTH OF 90,000 PSI IS ACCEPTABLE.

GUARDRAIL ANCHOR ASSEMBLY WITH BOLTS SHALL BE ASSEMBLED IN THE SHOP. BOLT THREADS MAY BE RECUT AS NECESSARY TO INSURE FIT.

THE COST OF THE GUARDRAIL ANCHOR ASSEMBLY FOR CULVERTS COMPLETE IN PLACE, SHALL BE INCLUDED IN THE UNIT CONTRACT PRICE BID FOR CLASS "A" CONCRETE.

FERRULES TO BE PLUGGED DURING POURING OF SLAB AS RECOMMENDED BY THE MANUFACTURER.

AT THE CONTRACTOR'S OPTION, FERRULES WITH OPEN OR CLOSED ENDS MAY BE USED.

PAYMENT FOR GUARDRAIL, POSTS, AND POST BASE PLATES IS INCLUDED IN ROADWAY PAY ITEMS.

SLAB REINFORCING STEEL MAY BE SHIFTED AS NECESSARY TO CLEAR GUARDRAIL ANCHOR ASSEMBLY. CARE SHOULD BE TAKEN TO KEEP THE SHIFTING OF REINFORCING STEEL TO A MINIMUM.

THE CONTRACTOR MAY USE ADHESIVELY ANCHORED ANCHOR BOLTS IN PLACE OF GUARDRAIL ANCHOR ASSEMBLY. LEVEL TWO FIELD TESTING IS REQUIRED, AND THE YIELD LOAD OF THE 1″Ø BOLT IS 21.8 KIPS. FOR ADHESIVELY ANCHORED ANCHOR BOLTS OR DOWELS, SEE STANDARD SPECIFICATIONS.

PROJECT NO. B-5726
GUILFORD COUNTY
STATION: 16+10.00 -L-

SHEET 5 OF 6

STATE OF NORTH CAROLINA
DEPARTMENT OF TRANSPORTATION
RALEIGH

ANCHORAGE DETAILS FOR GUARDRAIL ANCHOR ASSEMBLY FOR CULVERTS

DRAWN BY: S.D. COOPER	DATE: 4-18
CHECKED BY: B.S. COX	DATE: 4-18
DESIGN ENGINEER OF RECORD: B.S. COX	DATE: 4-18

PLANS PREPARED BY:

SIMPSON ENGINEERS & ASSOCIATES
5640 Dillard Drive
Suite 200
Cary, NC 27518
(919) 852-0468
(919) 852-0598 (Fax)
www.simpsonengr.com
LICENSURE NO. C-2521

NORTH CAROLINA PROFESSIONAL SEAL 11268 ENGINEER BETSY S. COX
4/24/2018

DOCUMENT NOT CONSIDERED FINAL UNLESS ALL SIGNATURES COMPLETED

REVISIONS						
NO.	BY:	DATE:	NO.	BY:	DATE:	
1			3			
2			4			

SHEET NO. C1-5
TOTAL SHEETS 6

DocuSign Envelope ID: EE978408-8E8C-4951-85BD-145278E6E8D9

4/24/2018 11:23:36 AM G:\Projects\2016\Division 7 TIP (Mott Macdonald)\B-5726 Guilford 135 (Double 11 x 6 RCBC)\Structures\Drawings\Final\410_B5726_SMU_CU_400135.dgn

LOAD AND RESISTANCE FACTOR RATING (LRFR) SUMMARY FOR REINFORCED CONCRETE BOX CULVERTS

LEVEL		VEHICLE	WEIGHT (W) (TONS)	CONTROLLING LOAD RATING (#)	MINIMUM RATING FACTORS (RF)	TONS = W × RF	STRENGTH I LIMIT STATE									COMMENT NUMBER
							LIVE-LOAD FACTORS $\gamma_{(LL)}$	MOMENT				SHEAR				
								RATING FACTOR	BOX NO.	ELEMENT TYPE	DISTANCE FROM LEFT END OF ELEMENT (ft)	RATING FACTOR	BOX NO.	ELEMENT TYPE	DISTANCE FROM LEFT END OF ELEMENT (ft)	
DESIGN LOAD RATING		HL-93 (INVENTORY)	N/A	1	1.01	- -	1.75	1.49	1	TOP SLAB - MID	4.70	1.01	1	TOP SLAB - RT END	9.65	
		HL-93 (OPERATING)	N/A		1.31	- -	1.35	1.93	1	TOP SLAB - MID	4.70	1.31	1	TOP SLAB - RT END	9.65	
		HS-20 (INVENTORY)	36.000	2	1.05	37.8	1.75	1.52	1	BOT SLAB - RIGHT	10.67	1.05	1	TOP SLAB - RT END	9.65	
		HS-20 (OPERATING)	36.000		1.36	49.0	1.35	1.97	1	BOT SLAB - RIGHT	10.67	1.36	1	TOP SLAB - RT END	9.65	
LEGAL LOAD RATING	SINGLE VEHICLE (SV)	SNSH	13.500		2.82	38.1	1.40	2.82	1	TOP SLAB - MID	4.70	2.91	1	TOP SLAB - RT END	9.65	
		SNGARBS2	20.000		2.58	51.6	1.40	2.64	1	TOP SLAB - MID	4.70	2.58	1	TOP SLAB - RT END	9.65	
		SNAGRIS2	22.000		2.67	58.7	1.40	2.75	1	BOT SLAB - RIGHT	10.67	2.67	1	BOT SLAB - RT END	9.88	
		SNCOTTS3	27.250	3	1.27	34.6	1.40	1.85	1	TOP SLAB - MID	4.70	1.27	1	TOP SLAB - RT END	9.65	
		SNAGGRS4	34.925		1.51	52.7	1.40	1.71	1	BOT SLAB - RIGHT	10.67	1.51	1	TOP SLAB - RT END	9.65	
		SNS5A	35.550		1.43	50.8	1.40	1.68	1	BOT SLAB - RIGHT	10.67	1.43	1	TOP SLAB - RT END	9.65	
		SNS6A	39.950		1.38	55.1	1.40	1.66	1	BOT SLAB - RIGHT	10.67	1.38	1	TOP SLAB - RT END	9.65	
		SNS7B	42.000		1.38	58.0	1.40	1.62	1	BOT SLAB - RIGHT	10.67	1.38	1	TOP SLAB - RT END	9.65	
	TRUCK TRACTOR SEMI-TRAILER (TTST)	TNAGRIT3	33.000		1.80	59.4	1.40	1.87	1	BOT SLAB - RIGHT	10.67	1.80	1	BOT SLAB - RT END	9.88	
		TNT4A	33.075		1.51	49.9	1.40	1.84	1	BOT SLAB - RIGHT	10.67	1.51	1	TOP SLAB - RT END	9.65	
		TNT6A	41.600		1.40	58.2	1.40	1.68	1	BOT SLAB - RIGHT	10.67	1.40	1	TOP SLAB - RT END	9.65	
		TNT7A	42.000		1.44	60.5	1.40	1.59	1	BOT SLAB - RIGHT	10.67	1.44	1	TOP SLAB - RT END	9.65	
		TNT7B	42.000		1.46	61.3	1.40	1.70	1	BOT SLAB - RIGHT	10.67	1.46	1	TOP SLAB - RT END	9.65	
		TNAGRIT4	43.000		1.38	59.3	1.40	1.49	1	BOT SLAB - RIGHT	10.67	1.38	1	BOT SLAB - RT END	9.88	
		TNAGT5A	45.000		1.43	64.4	1.40	1.64	1	BOT SLAB - RIGHT	10.67	1.43	1	TOP SLAB - RT END	9.65	
		TNAGT5B	45.000		1.37	61.7	1.40	1.46	1	BOT SLAB - RIGHT	10.67	1.37	1	TOP SLAB - RT END	9.65	

LOAD FACTORS:

DESIGN LOAD RATING FACTORS

LOAD TYPE	MAX FACTOR	MIN FACTOR
DC	1.25	0.90
DW	1.50	0.65
EV	1.30	0.90
EH	1.35	0.90
ES	1.35	0.90
LS	1.75	--
WA	1.00	--

NOTE:

RATING FACTORS ARE BASED ON THE STRENGTH I LIMIT STATE.

(#) CONTROLLING LOAD RATING

(1) DESIGN LOAD RATING (HL-93)

(2) DESIGN LOAD RATING (HS-20)

(3) LEGAL LOAD RATING **

** SEE CHART FOR VEHICLE TYPE

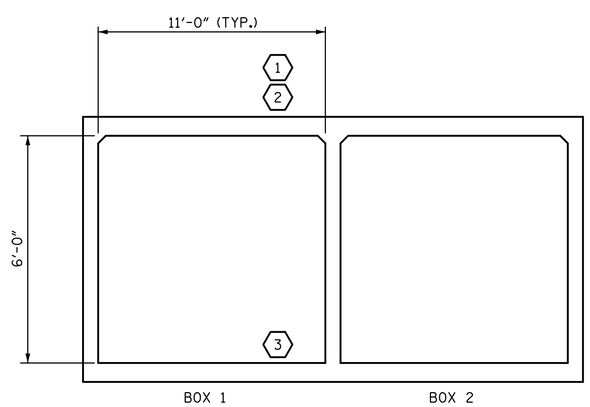

LRFR SUMMARY

(LOOKING UPSTREAM)

PROJECT NO. B-5726

GUILFORD COUNTY

STATION: 16+10.00 -L-

SHEET 6 OF 6

STATE OF NORTH CAROLINA
DEPARTMENT OF TRANSPORTATION
RALEIGH

LRFR SUMMARY FOR REINFORCED CONCRETE BOX CULVERTS

(NON-INTERSTATE TRAFFIC)

PLANS PREPARED BY:

SIMPSON ENGINEERS & ASSOCIATES
5640 Dillard Drive
Suite 200
Cary, NC 27518
(919) 852-0468
(919) 852-0598 (Fax)
www.simpsonengr.com
LICENSURE NO. C-2521

NORTH CAROLINA PROFESSIONAL SEAL 11268 ENGINEER BETSY S. COX
DocuSigned by: 4/24/2018

DOCUMENT NOT CONSIDERED FINAL UNLESS ALL SIGNATURES COMPLETED

REVISIONS						
NO.	BY:	DATE:	NO.	BY:	DATE:	
1			3			
2			4			

SHEET NO. C1-6

TOTAL SHEETS 6

DRAWN BY: S.D. COOPER DATE: 4-18
CHECKED BY: B.S. COX DATE: 4-18
DESIGN ENGINEER OF RECORD: B.S. COX DATE: 4-18

DocuSign Envelope ID: EE978408-8E8C-4951-85BD-145278E6E8D9

4/24/2018 11:23:36 AM G:\Projects\2016\Division 7 TIP (Mott Macdonald)\B-5726 Guilford 135 (Double 11 x 6 RCBC)\Structures\Drawings\Final\410_B5726_SMU_SN_400135.dgn

STANDARD NOTES

DESIGN DATA:

SPECIFICATIONS	A.A.S.H.T.O. (CURRENT)
LIVE LOAD	SEE PLANS
IMPACT ALLOWANCE	SEE A.A.S.H.T.O.
STRESS IN EXTREME FIBER OF	
STRUCTURAL STEEL - AASHTO M270 GRADE 36	20,000 LBS. PER SQ. IN.
- AASHTO M270 GRADE 50W	27,000 LBS. PER SQ. IN.
- AASHTO M270 GRADE 50	27,000 LBS. PER SQ. IN.
REINFORCING STEEL IN TENSION	
GRADE 60	24,000 LBS. PER SQ. IN.
CONCRETE IN COMPRESSION	1,200 LBS. PER SQ. IN.
CONCRETE IN SHEAR	SEE A.A.S.H.T.O.
STRUCTURAL TIMBER - TREATED OR	
UNTREATED - EXTREME FIBER STRESS	1,800 LBS. PER SQ. IN.
COMPRESSION PERPENDICULAR TO GRAIN OF TIMBER	375 LBS. PER SQ. IN.
EQUIVALENT FLUID PRESSURE OF EARTH	30 LBS. PER CU. FT. (MINIMUM)

MATERIAL AND WORKMANSHIP:

EXCEPT AS MAY OTHERWISE BE SPECIFIED ON PLANS OR IN THE SPECIAL PROVISIONS, ALL MATERIAL AND WORKMANSHIP SHALL BE IN ACCORDANCE WITH THE 2018 "STANDARD SPECIFICATIONS FOR ROADS AND STRUCTURES" OF THE N. C. DEPARTMENT OF TRANSPORTATION.

STEEL SHEET PILING FOR PERMANENT OR TEMPORARY APPLICATIONS SHALL BE HOT ROLLED.

CONCRETE:

UNLESS OTHERWISE REQUIRED ON PLANS, CLASS A CONCRETE SHALL BE USED FOR ALL PORTIONS OF ALL STRUCTURES WITH THE EXCEPTION THAT: CLASS AA CONCRETE SHALL BE USED IN BRIDGE SUPERSTRUCTURES, ABUTMENT BACKWALLS, AND APPROACH SLABS; AND CLASS B CONCRETE SHALL BE USED FOR SLOPE PROTECTION AND RIP RAP.

CONCRETE CHAMFERS:

UNLESS OTHERWISE NOTED ON THE PLANS, ALL EXPOSED CORNERS ON STRUCTURES SHALL BE CHAMFERED 3/4" WITH THE FOLLOWING EXCEPTIONS: TOP CORNERS OF CURBS MAY BE ROUNDED TO 1-1/2" RADIUS WHICH IS BUILT INTO CURB FORMS; CORNERS OF TRANSVERSE FLOOR EXPANSION JOINTS SHALL BE ROUNDED WITH A 1/4" FINISHING TOOL UNLESS OTHERWISE REQUIRED ON PLANS; AND CORNERS OF EXPANSION JOINTS IN THE ROADWAY FACES AND TOPS OF CURBS AND SIDEWALKS SHALL BE ROUNDED TO A 1/4" RADIUS WITH A FINISHING STONE OR TOOL UNLESS OTHERWISE REQUIRED ON PLANS.

DOWELS:

DOWELS WHEN INDICATED ON PLANS AS FOR CULVERT EXTENSIONS, SHALL BE EMBEDDED AT LEAST 12" INTO THE OLD CONCRETE AND GROUTED INTO PLACE WITH 1:2 CEMENT MORTAR.

ALLOWANCE FOR DEAD LOAD DEFLECTION, SETTLEMENT: ETC. IN CASTING SUPERSTRUCTURES:

BRIDGES SHALL BE BUILT ON THE GRADE OR VERTICAL CURVE SHOWN ON PLANS. SLABS, CURBS AND PARAPETS SHALL CONFORM TO THE GRADE OR CURVE.

ALL DIMENSIONS WHICH ARE GIVEN IN SECTION AND ARE AFFECTED BY DEAD LOAD DEFLECTIONS ARE DIMENSIONS AT CENTER LINE OF BEARING UNLESS OTHERWISE NOTED ON PLANS. IN SETTING FORMS FOR STEEL BEAM BRIDGES AND PRESTRESSED CONCRETE GIRDER BRIDGES, ADJUSTMENTS SHALL BE MADE DUE TO THE DEAD LOAD DEFLECTIONS FOR THE ELEVATIONS SHOWN. WHERE BLOCKS ARE SHOWN OVER BEAMS FOR BUILDING UP TO THE SLAB, THE VERTICAL DIMENSIONS OF THE BLOCKS SHALL BE ADJUSTED BETWEEN BEARINGS TO COMPENSATE FOR DEAD LOAD DEFLECTIONS, VERTICAL CURVE ORDINATE, AND ACTUAL BEAM CAMBER. WHERE BOTTOM OF SLAB IS IN LINE WITH BOTTOM OF TOP FLANGES, DEPTH OF SLAB BETWEEN BEARINGS SHALL BE ADJUSTED TO COMPENSATE FOR DEAD LOAD DEFLECTION, VERTICAL CURVE ORDINATE, AND ACTUAL BEAM CAMBER.

IN SETTING FALSEWORK AND FORMS FOR REINFORCED CONCRETE SPANS, AN ALLOWANCE SHALL BE MADE FOR DEAD LOAD DEFLECTIONS, SETTLEMENT OF FALSEWORK, AND PERMANENT CAMBER WHICH SHALL BE PROVIDED FOR IN ADDITION TO THE ELEVATIONS SHOWN. AFTER REMOVAL OF THE FALSEWORK, THE FINISHED STRUCTURES SHALL CONFORM TO THE PROFILE AND ELEVATIONS SHOWN ON THE PLANS AND CONSTRUCTION ELEVATIONS FURNISHED BY THE ENGINEER.

DETAILED DRAWINGS FOR FALSEWORK OR FORMS FOR BRIDGE SUPERSTRUCTURE AND ANY STRUCTURE OR PARTS OF A STRUCTURE AS NOTED ON THE PLANS SHALL BE SUBMITTED TO THE ENGINEER FOR APPROVAL BEFORE CONSTRUCTION OF THE FALSEWORK OR FORMS IS STARTED.

REINFORCING STEEL:

ALL REINFORCING STEEL SHALL BE DEFORMED. DIMENSIONS RELATIVE TO PLACEMENT OF REINFORCING ARE TO CENTERS OF BARS UNLESS OTHERWISE INDICATED IN THE PLANS. DIMENSIONS ON BAR DETAILS ARE TO CENTERS OF BARS OR ARE OUT TO OUT AS INDICATED ON PLANS.

WIRE BAR SUPPORTS SHALL BE PROVIDED FOR REINFORCING STEEL WHERE INDICATED ON THE PLANS. WHEN BAR SUPPORT PIECES ARE PLACED IN CONTINUOUS LINES, THEY SHALL BE SO PLACED THAT THE ENDS OF THE SUPPORTING WIRES SHALL BE LAPPED TO LOCK LEGS ON ADJOINING PIECES.

STRUCTURAL STEEL:

AT THE CONTRACTOR'S OPTION, HE MAY SUBSTITUTE 7/8" Ø SHEAR STUDS FOR THE 3/4" Ø STUDS SPECIFIED ON THE PLANS. THIS SUBSTITUTION SHALL BE MADE AT THE RATE OF 3 - 7/8" Ø STUDS FOR 4 - 3/4" Ø STUDS, AND STUD SPACING CHANGES SHALL BE MADE AS NECESSARY TO PROVIDE THE SAME EQUIVALENT NUMBER OF 7/8" Ø STUDS ALONG THE BEAM AS SHOWN FOR 3/4" Ø STUDS BASED ON THE RATIO OF 3 - 7/8" Ø STUDS FOR 4 - 3/4" Ø STUDS. STUDS OF THE LENGTH SPECIFIED ON THE PLANS MUST BE PROVIDED. THE MAXIMUM SPACING SHALL BE 2'-0".

EXCEPT AT THE INTERIOR SUPPORTS OF CONTINUOUS BEAMS WHERE THE COVER PLATE IS IN CONTACT WITH BEARING PLATE, THE CONTRACTOR MAY, AT HIS OPTION, SUBSTITUTE FOR THE COVER PLATES DESIGNATED ON THE PLANS COVER PLATES OF THE EQUIVALENT AREA PROVIDED THESE PLATES ARE AT LEAST 5/16" IN THICKNESS AND DO NOT EXCEED A WIDTH EQUAL TO THE FLANGE WIDTH LESS 2" OR A THICKNESS EQUAL TO 2 TIMES THE FLANGE THICKNESS. THE SIZE OF FILLET WELDS SHALL CONFORM TO THE REQUIREMENTS OF THE CURRENT ANSI/AASHTO/AWS "BRIDGE WELDING CODE". ELECTROSLAG WELDING WILL NOT BE PERMITTED.

WITH THE SOLE EXCEPTION OF EDGES AT SURFACES WHICH BEAR ON OTHER SURFACES, ALL SHARP EDGES AND ENDS OF SHAPES AND PLATES SHALL BE SLIGHTLY ROUNDED BY SUITABLE MEANS TO A RADIUS OF APPROXIMATELY 1/16 INCH OR EQUIVALENT FLAT SURFACE AT A SUITABLE ANGLE PRIOR TO PAINTING, GALVANIZING, OR METALLIZING.

HANDRAILS AND POSTS:

METAL STANDARDS AND FACES OF THE CONCRETE END POSTS FOR THE METAL RAIL SHALL BE SET NORMAL TO THE GRADE OF THE CURB, UNLESS OTHERWISE SHOWN ON PLANS. THE METAL RAIL AND TOPS OF CONCRETE POSTS USED WITH THE ALUMINUM RAIL SHALL BE BUILT PARALLEL TO THE GRADE OF THE CURB.

METAL HANDRAILS SHALL BE IN ACCORDANCE WITH THE PLANS. RAILS SHALL BE AS MANUFACTURED FOR BRIDGE RAILING. CASTINGS SHALL BE OF A UNIFORM APPEARANCE. FINS AND OTHER DEFORMATIONS RESULTING FROM CASTING OR OTHERWISE SHALL BE REMOVED IN A MANNER SO THAT A UNIFORM COLORING OF THE COMPLETED CASTING SHALL BE OBTAINED. CASTINGS WITH DISCOLORATIONS OR OF NON-UNIFORM COLORING WILL NOT BE ACCEPTED. CERTIFIED MILL REPORTS ARE REQUIRED FOR METAL RAILS AND POSTS.

SPECIAL NOTES:

GENERALLY, IN CASE OF DISCREPANCY, THIS STANDARD SHEET OF NOTES SHALL GOVERN OVER THE SPECIFICATIONS, BUT THE REMAINDER OF THE PLANS SHALL GOVERN OVER NOTES HEREON, AND SPECIAL PROVISIONS SHALL GOVERN OVER ALL. SEE SPECIFICATIONS ARTICLE 105-4.

ENGLISH

JANUARY, 1990