2017 CR CONTRACT – GUILFORD COUNTY

PROJECT REFERENCE NO.	SHEET NO.
44917.3.4	1

R–5787C
TAP–0708(085)

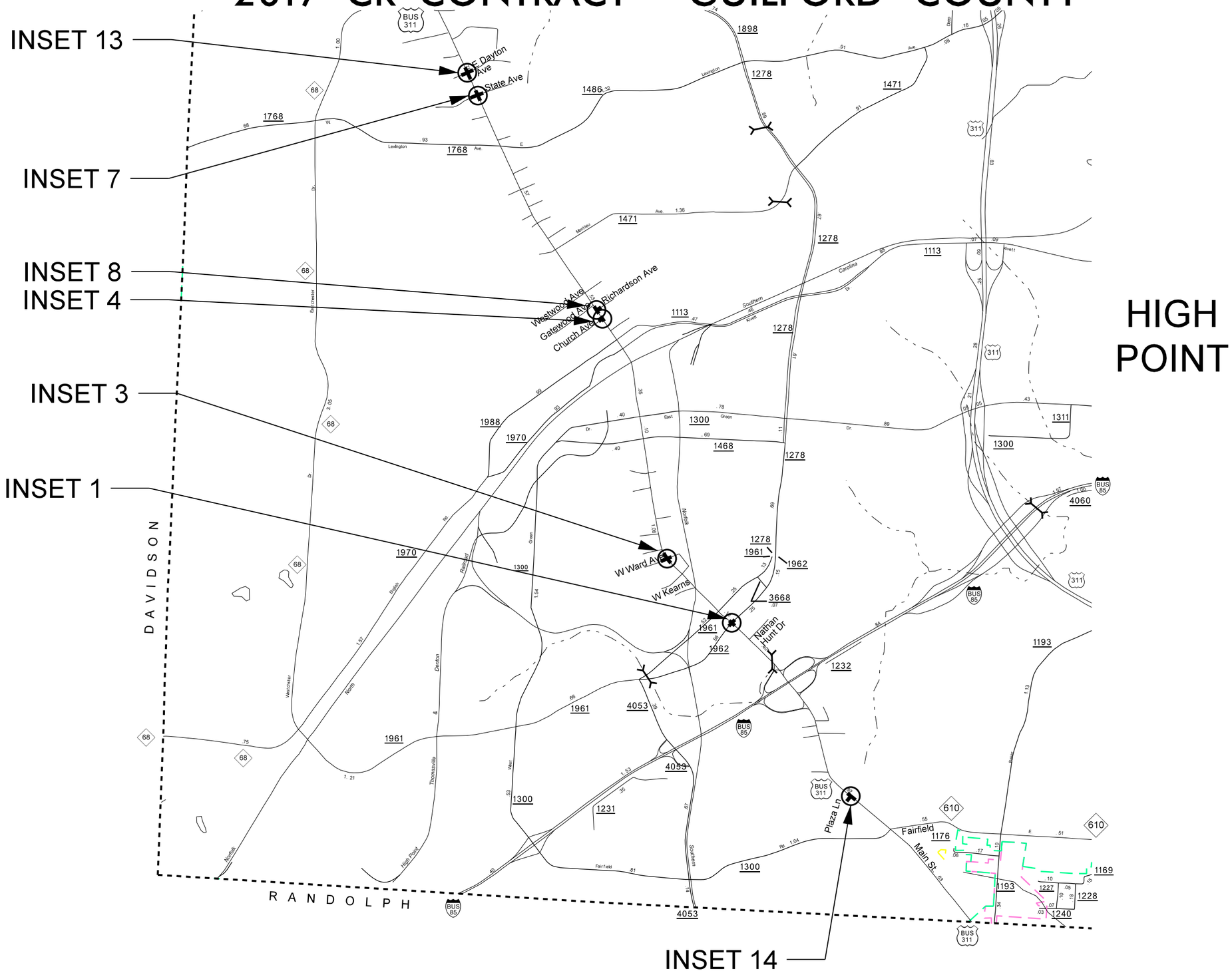

5/14/99

14-JUN-2017 14:15
Div7_2016_Roadway\Proj\District 2\CONTRACT 1_R5787C\WCR_VICINITY_psh1.dgn
$$$$USERNAME$$$$

2017 CR CONTRACT – GREENSBORO
GUILFORD COUNTY

PROJECT REFERENCE NO.	SHEET NO.
44917.3.4	2

R–5787C

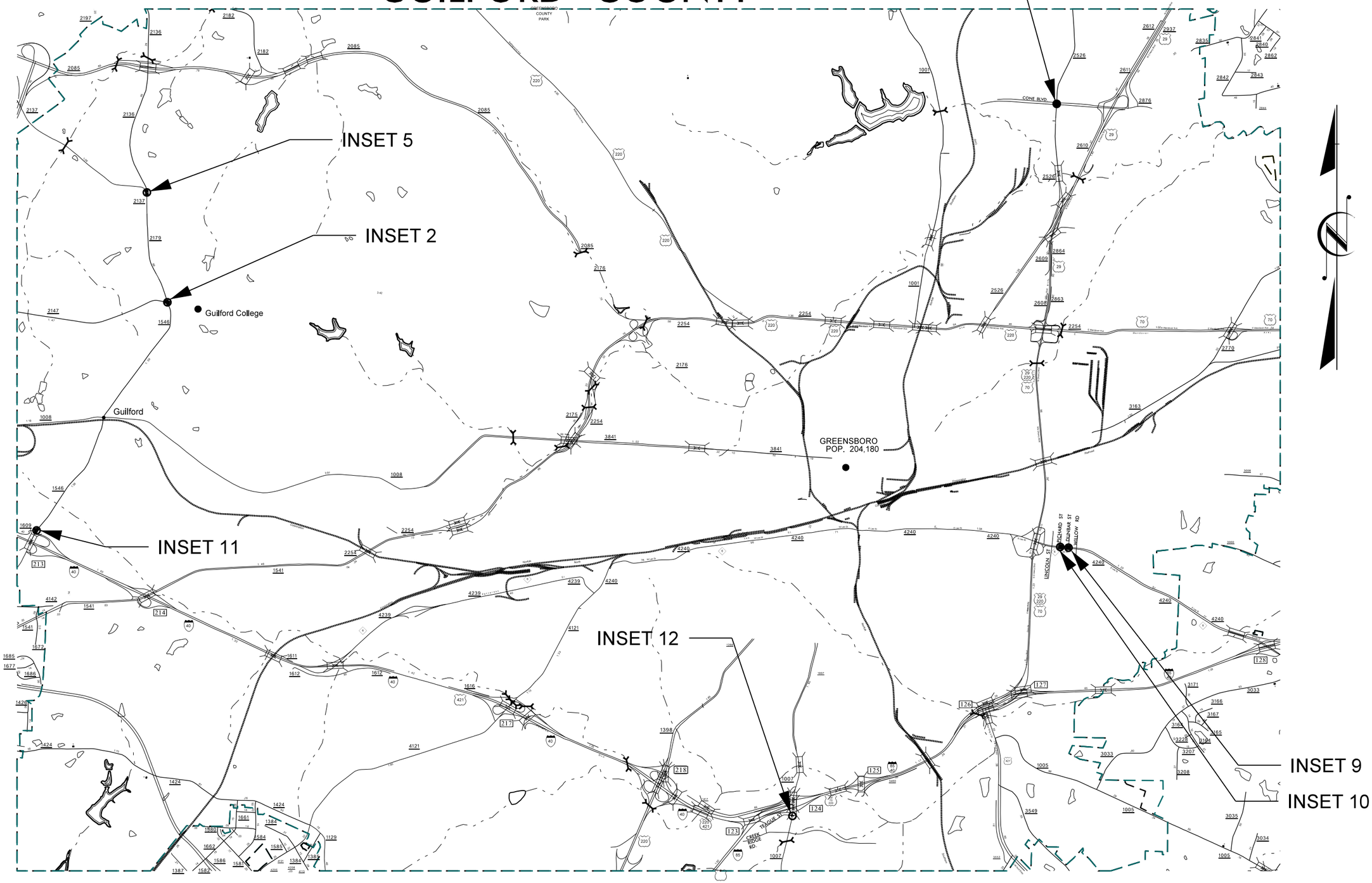

5/14/99

19-JUN-2017 11:37
Div7_2016_Roadway\Proj\District 2\CONTRACT 1_R5787C\WCR_VICINTY_psh2.dgn
$$$$USERNAME$$$$

PROJECT REFERENCE NO.	SHEET NO.
44917.3.4	3

R–5787C

2017 CR CONTRACT – HIGH POINT
GUILFORD COUNTY

INSET 1: SR 1009 (MAIN ST.) @ UNIVERSITY PARKWAY/COLLEGE DR. (NON–SYSTEM)

INT. ID# J046

NOTES:
* UPGRADE CR'S IN ALL QUADRANTS

INSET 4: SR 1009 (MAIN ST.) @ CHURCH AVE. (NON–SYSTEM)

NOTES:
* UPGRADE CR'S IN QUADS 1 & 4

INSET 3: SR 1009 (MAIN ST.) @ WARD AVE. (NON–SYSTEM)

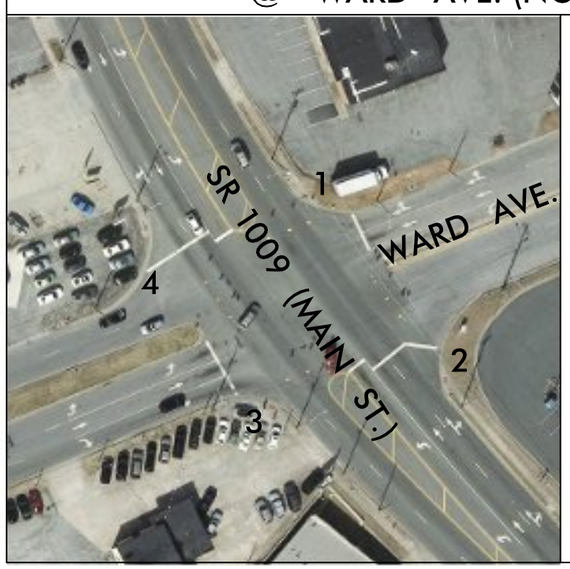

INT. ID# J051

NOTES:
* UPGRADE CR'S IN ALL QUADRANTS

INSET 7: SR 1009 (MAIN ST.) @ STATE AVE. (NON–SYSTEM)

NOTES:
* UPGRADE CR'S IN ALL QUADS

5/14/99
09-JUN-2017 14:56
Div2017 (Proj)\District 2\CONTRACT 1_R5787C\WCR_VICINITY_psh3.dgn
$$$$USERNAME$$$$

PROJECT REFERENCE NO.	SHEET NO.
44917.3.4	4

R–5787C

2017 CR CONTRACT – HIGH POINT GUILFORD COUNTY

INSET 8: SR 1009 (MAIN ST.) @ RICHARDSON AVE. (NON–SYSTEM)

NOTES:
* UPGRADE CR IN QUAD 3

INSET 14: SR 1009 (MAIN ST.) @ PLAZA LN. (NON–SYSTEM)

INT. ID# J033

NOTES:
* UPGRADE CR'S IN QUADS 3 & 4

INSET 13: SR 1009 (MAIN ST.) @ DAYTON AVE. (NON–SYSTEM)

NOTES:
* UPGRADE CR'S IN QUADS 3 & 4

5/14/99

19-JUN-2017 14:37
Div2000 Proj\District 2\CONTRACT 1\R5787C\WCR_VICINITY_psh4.dgn
$$$$USERNAME$$$$

PROJECT REFERENCE NO.	SHEET NO.
44917.3.4	5

R–5787C

2017 CR CONTRACT – GREENSBORO

GUILFORD COUNTY

INSET 2: SR 2179 (NEW GARDEN RD.) @ SR 2147 (FRIENDLY RD. – WEST)

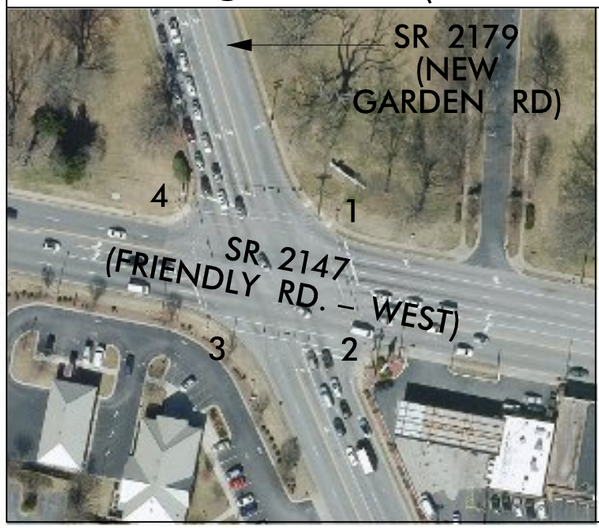

INT. ID# A136

NOTES:
* UPGRADE CR'S IN ALL QUADS.
* QUAD 1 – REMOVE RAMP OUTSIDE CROSSWALK & DO NOT REPLACE.
*QUAD 2 – REMOVE RAMP OUTSIDE CROSSWALK & DO NOT REPLACE.

INSET 6: SR 2526 (SUMMIT AVE.) @ E. CONE BLVD. (NON–SYSTEM)

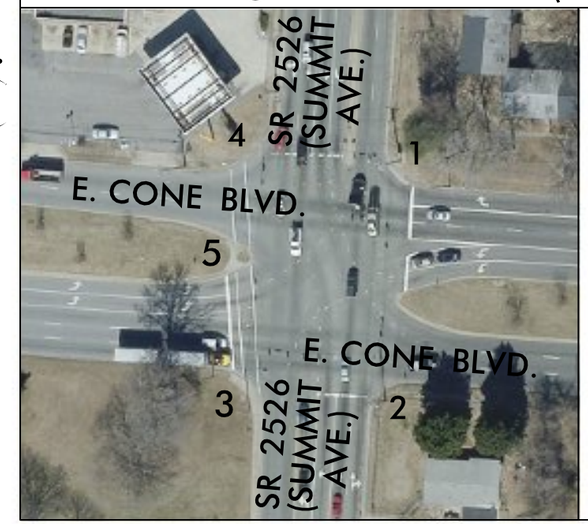

INT. ID# A062/A062A

NOTES:
* UPGRADE CR'S IN QUADS 3, 4 & 5

INSET 5: SR 2136 (FLEMING RD) @ SR 2137 (OLD OAK RIDGE RD)

INT. ID# A202/A202A/A202B

NOTES:
* UPGRADE CR'S IN QUADS 2, 3, 5 & 6

INSET 9: SR 4240 (E. GATE CITY BLVD.) @ DUNBAR ST. (NON–SYSTEM)

NOTES:
* UPGRADE CR'S IN ALL QUADS.

5/14/99
19-JUN-2017 14:38
Div2\Proj\District 2\CONTRACT 1\R5787C\WCR_VICINTY_psh5.dgn

PROJECT REFERENCE NO.	SHEET NO.
44917.3.4	6

R–5787C

2017 CR CONTRACT – GREENSBORO

GUILFORD COUNTY

INSET 10: SR 4240 (E. GATE CITY BLVD.) @ PICHARD ST. (NON–SYSTEM)

NOTES:
* UPGRADE CR'S IN ALL QUADS.

INSET 11: SR 1546 (GUILFORD COLLEGE RD.) @ SR 1609 (SWING RD.)

INT. ID# A174

NOTES:
* UPGRADE CR'S IN QUADS 1, 3 & 4

INSET 12: SR 1007 (RANDLEMAN RD.) @ TEAGUE STREET

NOTES:
* UPGRADE CR'S IN QUADS 1 & 2

5/14/99

14-JUN-2017 14:18
J:\2017\44917\Proj\District 2\CONTRACT 1\R5787C\WCR_VICINITY_psh6.dgn

PROJECT REFERENCE NO.	SHEET NO.
44917.3.4	7

R-5787C

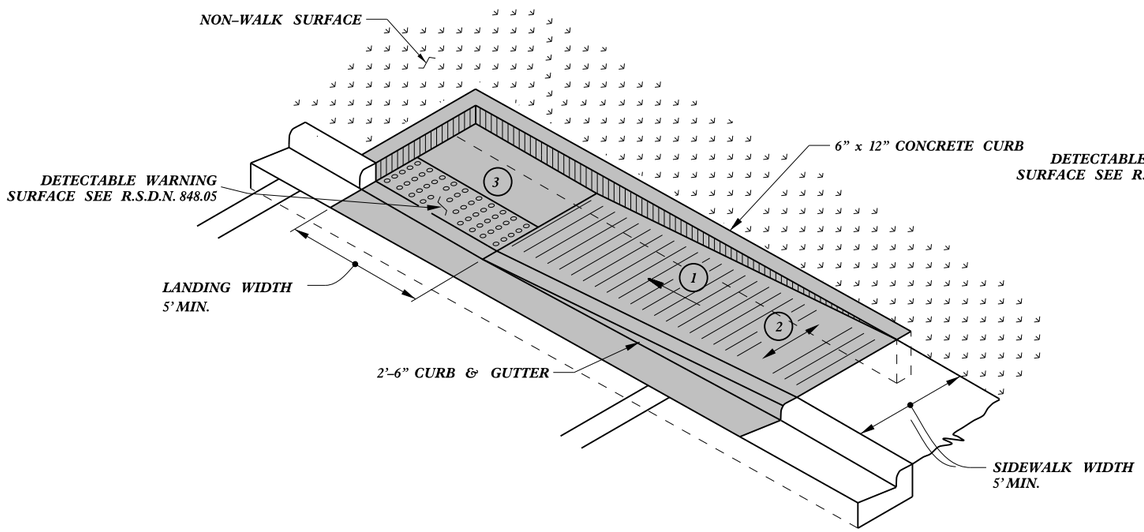

TYPE 1A

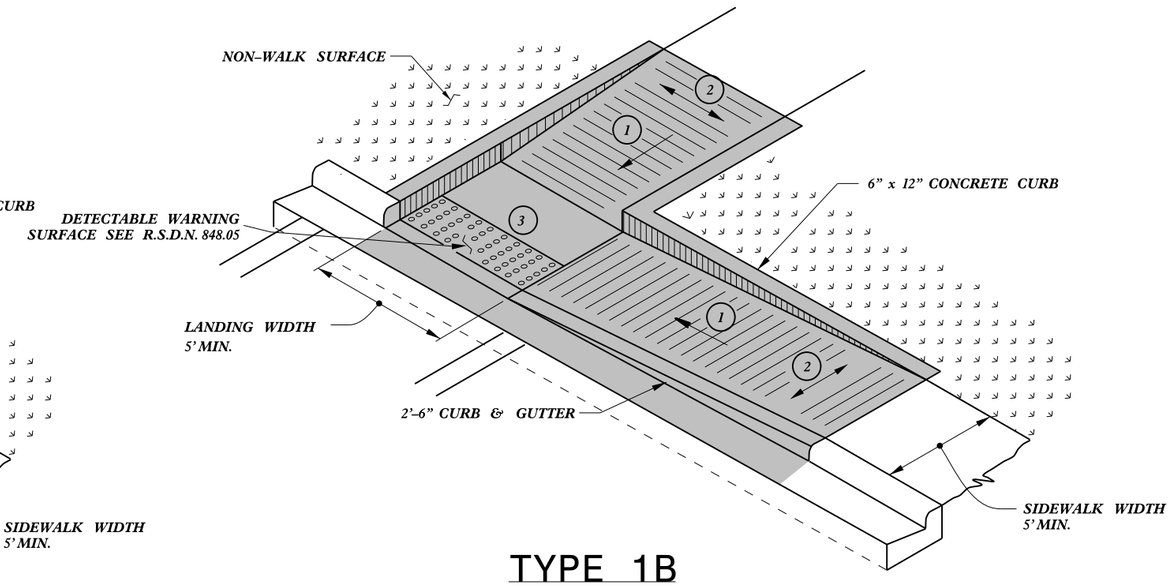

TYPE 1B

PAY LIMITS FOR 1 CURB RAMP

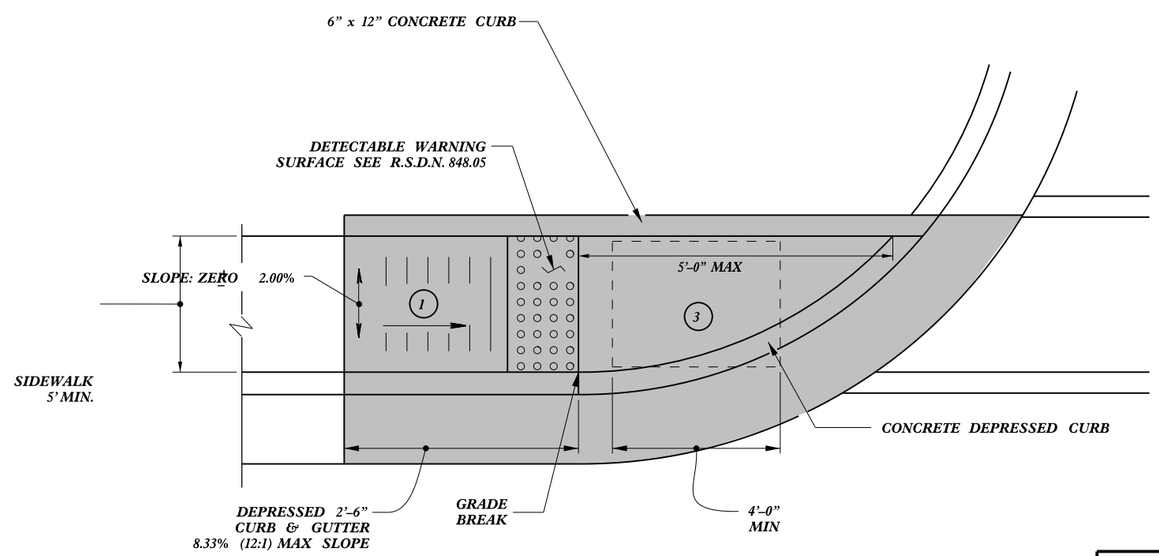

TYPE 1

1. 8.33% (12:1) MAX RAMP SLOPE
2. CROSS SLOPE: 2.00%
3. CURB RAMPS REQUIRE A (4'-0") MINIMUM LANDING WITH A MAXIMUM CROSS SLOPE AND LONGITUDINAL SLOPE OF 2.00% WHERE PEDESTRIANS PERFORM TURNING MANEUVERS. SLOPE TO DRAIN TO CURB.

REFER TO ROADWAY STANDARD DRAWING NUMBER 848.05 SHEET 3 OF 3 FOR ALL RAMP NOTES

NORTH CAROLINA PROFESSIONAL SEAL 022966 ENGINEER Joel S. Howerton

DocuSigned by:
Joel S. Howerton
8752CD17DCDC45F...
6/19/2017

CONTRACT STANDARDS AND DEVELOPMENT UNIT
Office 919-707-6950 FAX 919-250-4119

CURB RAMPS

Directional Ramps

ORIGINAL BY: J.S. HOWERTON DATE: 7/7/11
MODIFIED BY: DATE:
CHECKED BY: DATE:
FILE SPEC.: stds/2012CurbRamp/CurbRampDetails.dgn

5/14/99

$$$$$$SYSTIME$$$$
$$$$USERNAME$$$$

PROJECT REFERENCE NO.	SHEET NO.
44917.3.4	8

R-5787C

PAY LIMITS FOR 1 CURB RAMP

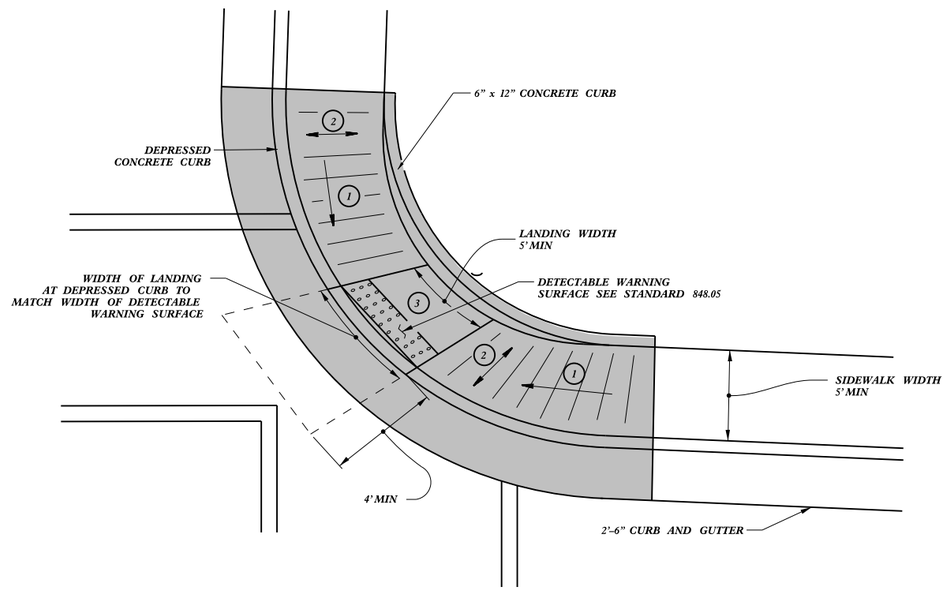

TYPE 2B

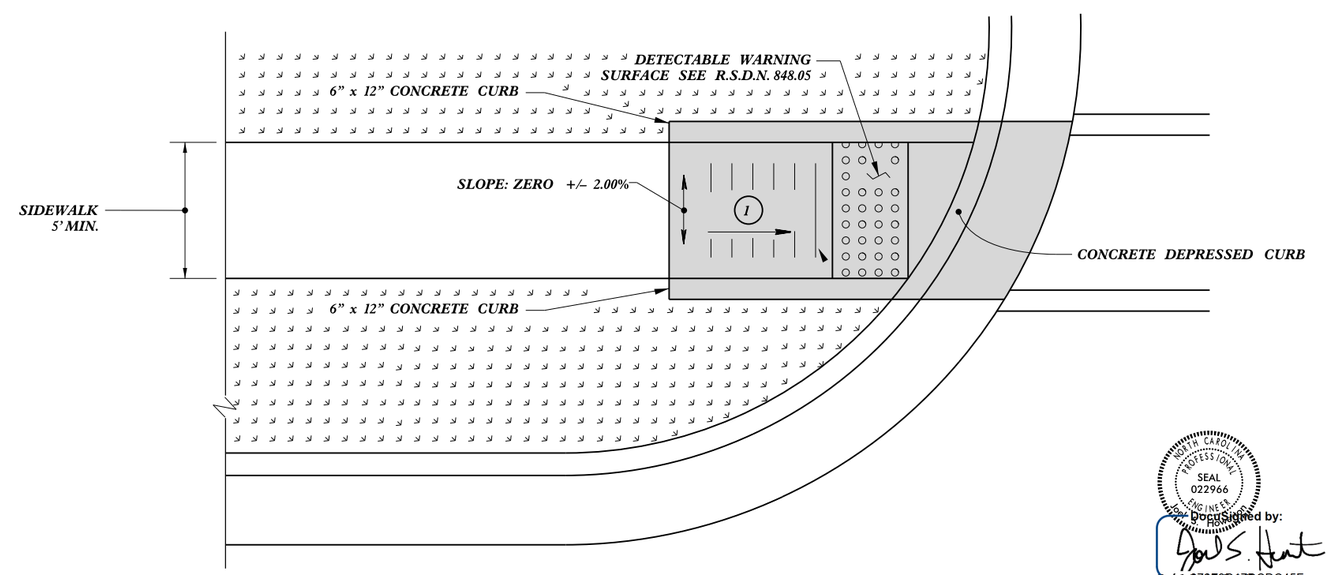

TYPE 1 Modified

1. 8.33% (12:1) MAX RAMP SLOPE
2. CROSS SLOPE: 2.00%
3. CURB RAMPS REQUIRE A (4'-0") MINIMUM LANDING WITH A MAXIMUM CROSS SLOPE AND LONGITUDINAL SLOPE OF 2.00% WHERE PEDESTRIANS PERFORM TURNING MANEUVERS. SLOPE TO DRAIN TO CURB.

REFER TO ROADWAY STANDARD DRAWING NUMBER 848.05 SHEET 3 OF 3 FOR ALL RAMP NOTES

NORTH CAROLINA PROFESSIONAL SEAL 022966 ENGINEER

DocuSigned by:
6/19/2017 9:35:00 PM PDT 7CDC45F...

CONTRACT STANDARDS AND DEVELOPMENT UNIT
Office 919-707-6950 FAX 919-250-4119

CURB RAMPS

Directional Ramps

ORIGINAL BY: J.S. HOWERTON DATE: 7/7/11
MODIFIED BY: DATE:
CHECKED BY: DATE:
FILE SPEC. stds/2012CurbRamp/CurbRampDetails.dgn

$$$$SYSTIME$$$$
$$$$SYSTIME$$$$
$$$$USERNAME$$$$

5/14/99

PROJECT REFERENCE NO.	SHEET NO.
44917.3.4	9

R-5787C

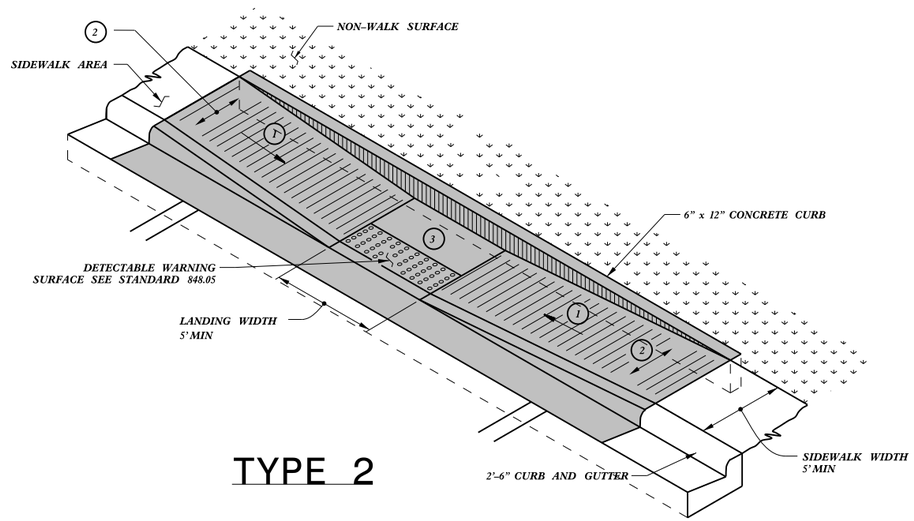

TYPE 2

[redacted] PAY LIMITS FOR 1 CURB RAMP

1. 8.33% (12:1) MAX RAMP SLOPE
2. CROSS SLOPE: 2.00%
3. CURB RAMPS REQUIRE A (4'-0") MINIMUM LANDING WITH A MAXIMUM CROSS SLOPE AND LONGITUDINAL SLOPE OF 2.00% WHERE PEDESTRIANS PERFORM TURNING MANEUVERS. SLOPE TO DRAIN TO CURB.

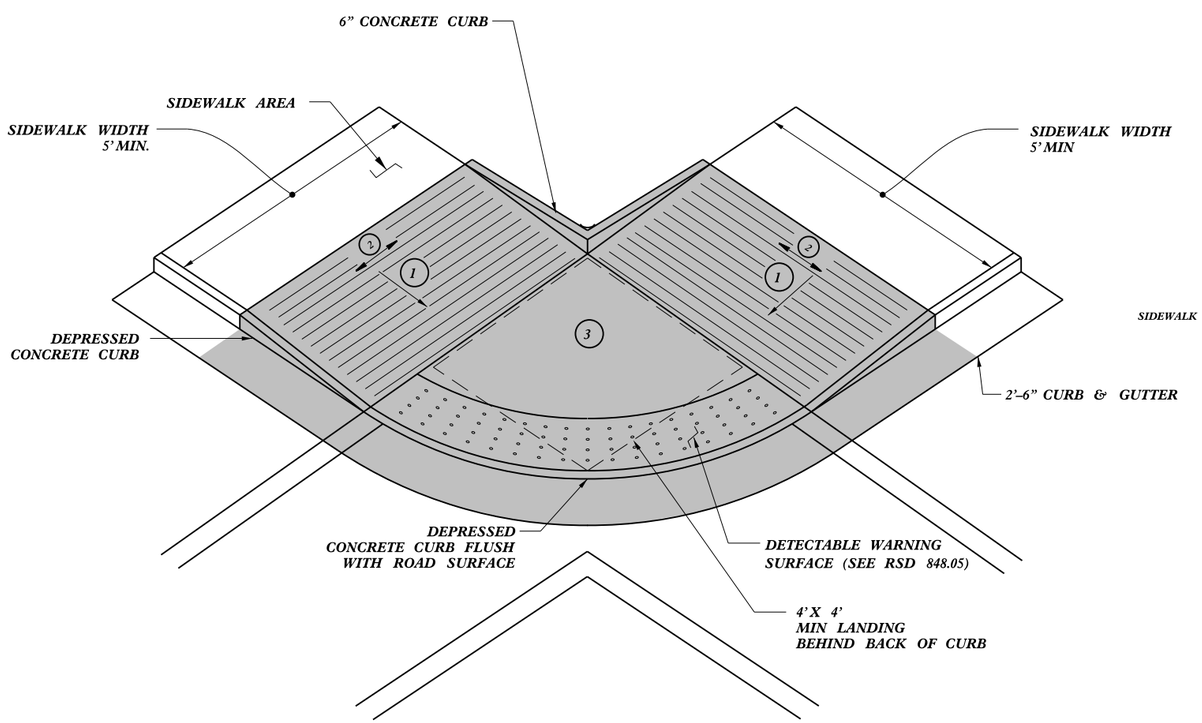

TYPE 2A

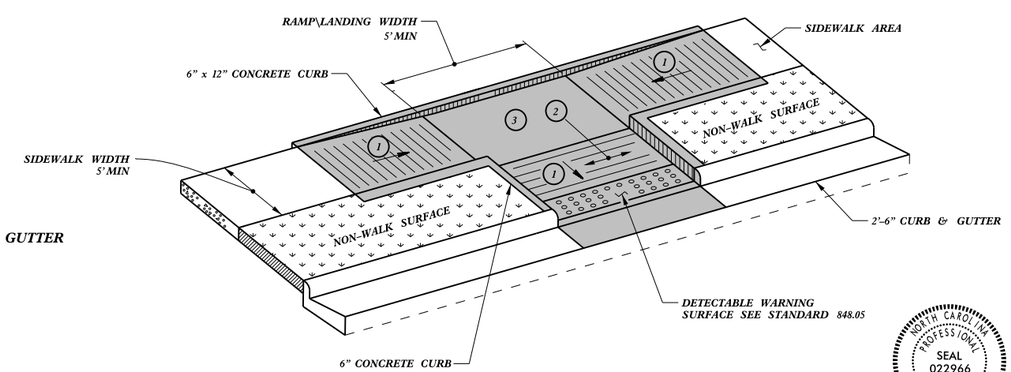

TYPE 3

NORTH CAROLINA PROFESSIONAL ENGINEER SEAL 022966 Joel S. Howerton

DocuSigned by:
6/19/2017
8735B017DCDC45F...

CONTRACT STANDARDS AND DEVELOPMENT UNIT
Office 919-707-6950 FAX 919-250-4119

CURB RAMPS

Parallel Ramps

ORIGINAL BY: J.S. HOWERTON DATE: 7/7/11
MODIFIED BY: DATE:
CHECKED BY: DATE:
FILE SPEC.: stds/2012CurbRamp/CurbRampDetails.dgn

REFER TO ROADWAY STANDARD DRAWING NUMBER 848.05 SHEET 3 OF 3 FOR ALL RAMP NOTES

$$$$USERNAME$$$$ $$$$SYSTIME$$$$ $$$$SYSTIME$$$$ $$$$DGN$$$$ $$$$$$$$$$$$$$$$

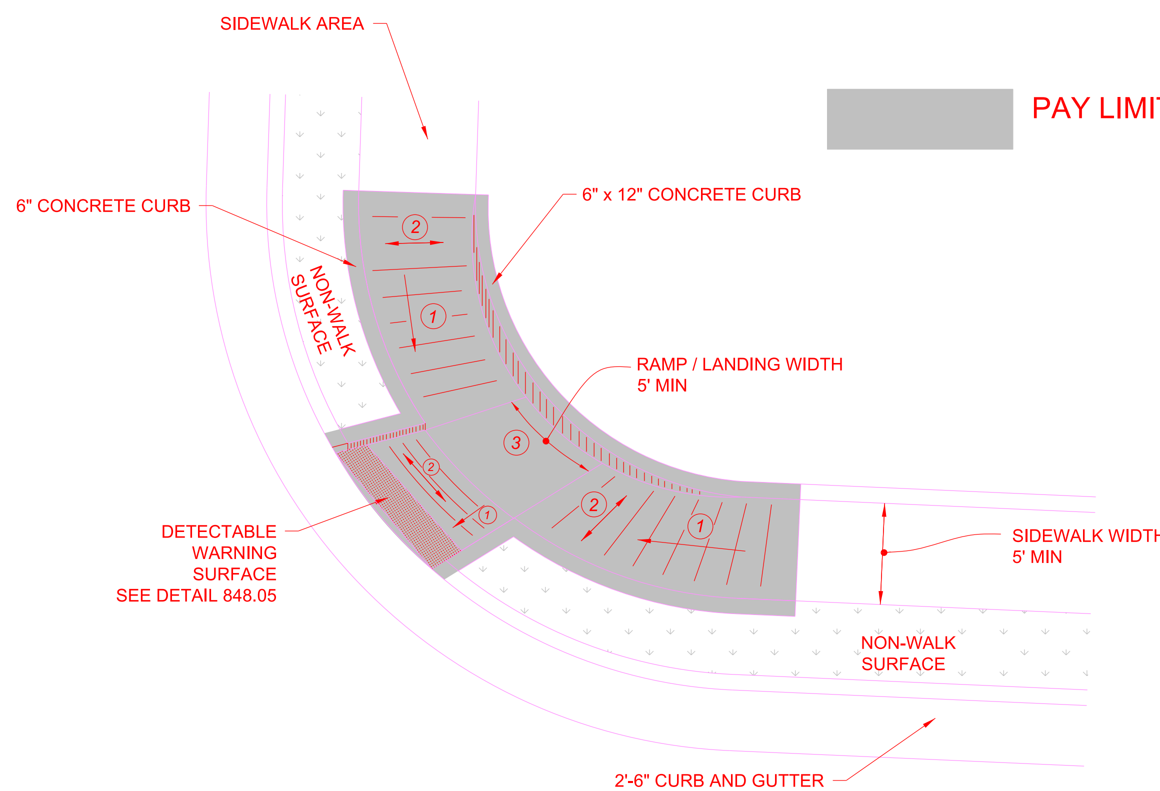

TYPE 3 MODIFIED
INSTALLATION IN A RADIUS

1. *8.33% (12:1) MAX RAMP SLOPE*
2. *CROSS SLOPE: 2.00%*
3. *CURB RAMPS REQUIRE A (4'-0") MINIMUM LANDING WITH A MAXIMUM CROSS SLOPE AND LONGITUDINAL SLOPE OF 2.00% WHERE PEDESTRIANS PERFORM TURNING MANEUVERS. SLOPE TO DRAIN TO CURB.*

REFER TO ROADWAY STANDARD DRAWING NUMBER 848.05 SHEET 3 OF 3 FOR ALL RAMP NOTES

NORTH CAROLINA PROFESSIONAL ENGINEER SEAL 022966 J. S. Howerton
DocuSigned by:
6/19/2017

DOCUMENT NOT CONSIDERED FINAL UNLESS ALL SIGNATURES COMPLETED

CONTRACT STANDARDS AND DEVELOPMENT UNIT
Office 919-707-6950 FAX 919-250-4119

CURB RAMPS
Parallel Ramps

ORIGINAL BY: J.S. HOWERTON DATE: 7/7/11
MODIFIED BY: DATE:
CHECKED BY: DATE:
FILE SPEC.: stds/2012CurbRamp/CurbRampDetails.dgn

5/14/99
$$$$$$SYSTIME$$$$
$$$$$$$$$$$$$$$$DGN$$$$$$$$$$$$$$$$$$$$$$$$
$$$$USERNAME$$$$

5/14/99

PROJECT REFERENCE NO.	SHEET NO.
44917.3.4	11

R-5787C

PAY LIMITS FOR 2 OR 3 CURB RAMPS (CALCULATE BASED ON NUMBER OF SETS OF TRUNCATED DOMES)

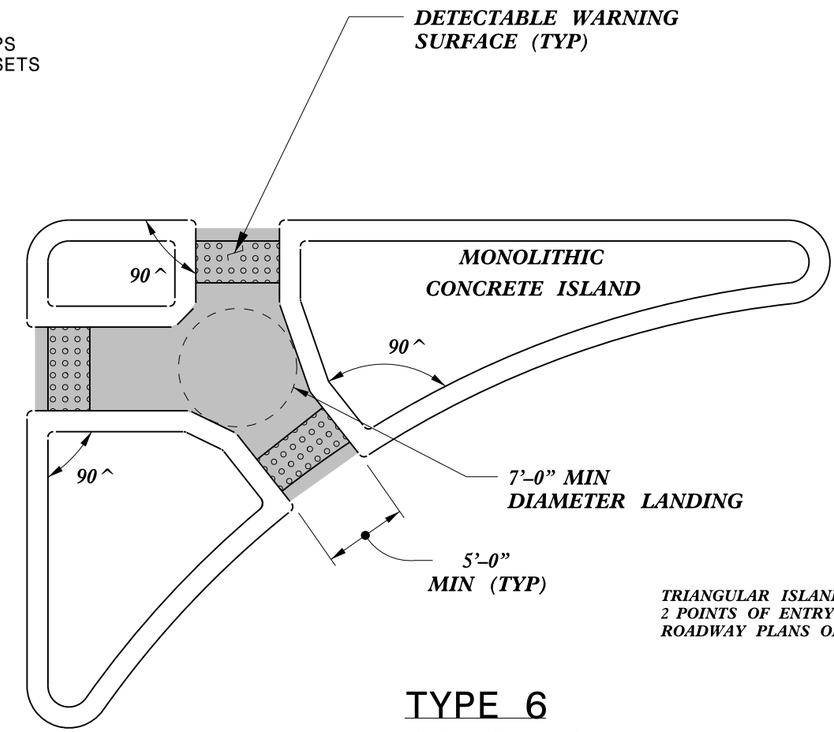

TRIANGULAR ISLANDS MAY BE CONSTRUCTED WITH ONLY 2 POINTS OF ENTRY AND EXIT AS SHOWN IN THE ROADWAY PLANS OR AS DIRECTED BY THE ENGINEER.

TYPE 6
TRIANGULAR ISLAND WITH CUT THROUGH

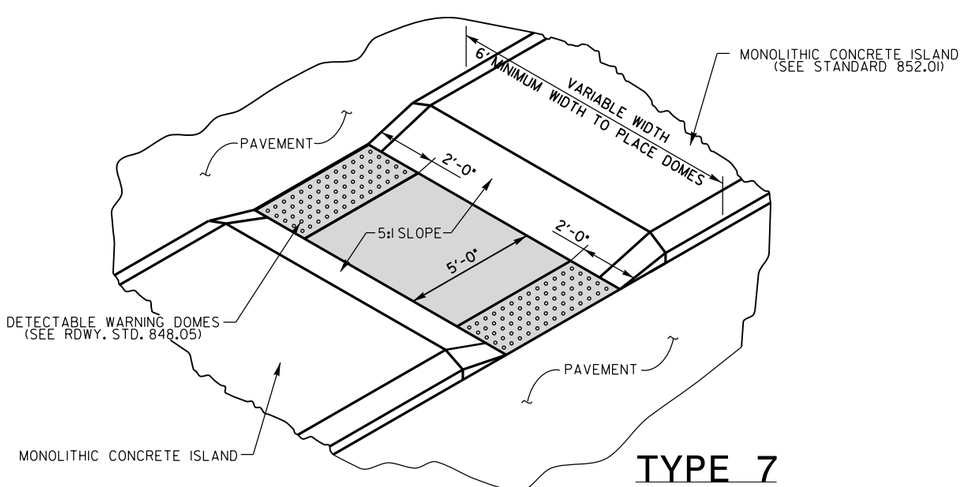

TYPE 7
MEDIAN ISLAND WITH CUT THROUGH

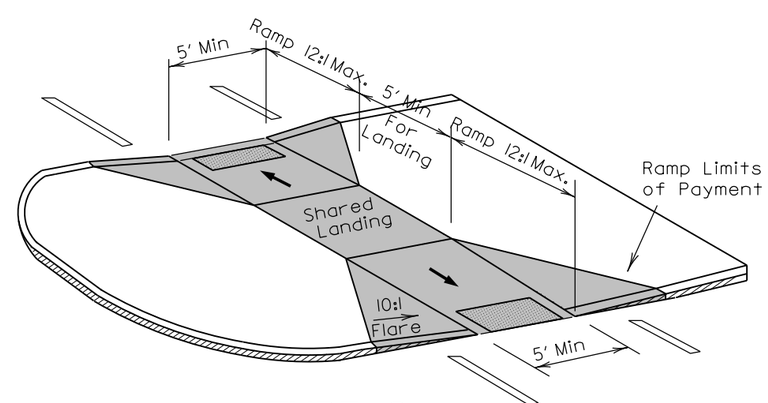

TYPE 8
MEDIAN ISLAND CURB RAMPS

NORTH CAROLINA PROFESSIONAL SEAL 022966 ENGINEER

Joe S. Howerton

DocuSigned by:
Joe S. Howerton
873E3D17DCDC45F...
6/19/2017

CONTRACT STANDARDS AND DEVELOPMENT UNIT
Office 919-707-6950 FAX 919-250-4119

CURB RAMPS
Median or Turn Lane Islands

ORIGINAL BY: J.S. HOWERTON DATE: 7/7/11
MODIFIED BY: DATE:
CHECKED BY: DATE:
FILE SPEC.: stds/2012CurbRamp/CurbRampDetails.dgn

$$$$$$SYSTIME$$$$$
$$$$$$SYSTIME$$$$$
$$$$$$USERNAME$$$$$

PROJECT REERENCE NO.	SHEET NO.
44917.3.4	12

*NOTE: FIELD FIT AS DIRECTED BY THE ENGINEER

GUILFORD COUNTY CURB RAMP CONTRACT - 44917.3.4

Inset #	Municipality	Major Route	Minor Route	Int. ID #	2' - 6" CURB & GUTTER	4" CONCRETE SIDEWALK	RETROFIT EXISTING CURB RAMP	GENERIC PAVING ITEM (REMOVE AND REPLACE CONCRETE CURB RAMPS - TYPE 1A)	GENERIC PAVING ITEM (REMOVE AND REPLACE CONCRETE CURB RAMPS - TYPE 1 MOD)	GENERIC PAVING ITEM (REMOVE AND REPLACE CONCRETE CURB RAMPS - TYPE 2)	GENERIC PAVING ITEM (REMOVE AND REPLACE CONCRETE CURB RAMPS - TYPE 2A)	GENERIC PAVING ITEM (REMOVE AND REPLACE CONCRETE CURB RAMPS - TYPE 2B)	GENERIC PAVING ITEM (REMOVE AND REPLACE CONCRETE CURB RAMPS - TYPE 3)	GENERIC PAVING ITEM (REMOVE AND REPLACE CONCRETE CURB RAMPS - TYPE 3 MOD)	GENERIC PAVING ITEM (REMOVE AND REPLACE CONCRETE CURB RAMPS - TYPE 7)	GENERIC PAVING ITEM (REMOVE CURB RAMP)	ADJUSTMENT OF MB OR WV	TEMPORARY TRAFFIC CONTROL	TEMPORARY SILT FENCE	WATTLE	SEEDING AND MULCHING	JUNCTION BOX (PULL BOX, OVERSIZED, HEAVY DUTY)
					LF	SY	EA	EA	EA	EA	EA	EA	EA	EA	EA	EA	EA	LS	LF	LF	AC	EA
1	High Point	SR 1009 (Main Street)	University Parkway / College Avenue															1	25	12	0.01	
			Quadrant 1									1										
			Quadrant 2	J046								1										
			Quadrant 3									1										
			Quadrant 4								1											
					0	0	0	0	0	0	1	3	0	0	0	0	0	1	25	12	0.01	0
2	Greensboro	SR 2179 (New Garden Road)	SR 2147 (Friendly Avenue)															1	25	12	0.02	
			Quadrant 1		15	8.35								1		1						
			Quadrant 2	A186	15	8.35								1		1						
			Quadrant 3											1								
			Quadrant 4								1											
					30	17	0	0	0	0	1	0	0	3	0	2	0	1	25	12	0.02	0
3	High Point	SR 1009 (Main Street)	Ward Avenue															1	25	36	0.01	
			Quadrant 1						1													
			Quadrant 2	J051					1													
			Quadrant 3						1													
			Quadrant 4						1*													
					0	0	0	0	4	0	0	0	0	0	0	0	0	1	25	36	0.01	0
4	High Point	SR 1009 (Main Street)	Church Avenue															1		12		1
			Quadrant 1										1									
			Quadrant 4								1											
					0	0	0	0	0	0	1	0	1	0	0	0	0	1	0	12	0	1
5	Greensboro	SR 2136 (Fleming Road)	SR 2137 (Old Oak Ridge Ridge Road)															1	25	12	0.02	
			Quadrant 2	A202/									1									
			Quadrant 3	A202A/									1									
			Quadrant 5	A202B											2							
			Quadrant 6				1															
					0	0	1	0	0	0	0	0	2	0	2	0	0	1	25	12	0.02	0
6	Greensboro	SR 2526 (Summitt Ave.)	E Cone Boulevard															1	25	12	0.01	
			Quadrant 3	A062/								1										
			Quadrant 4	A062A								1										
			Quadrant 5												2							
					0	0	0	0	0	0	0	2	0	0	2	0	0	1	25	12	0.01	0
7	High Point	SR 1009 (Main Street)	State Avenue															1	25	36	0.02	
			Quadrant 1											1								
			Quadrant 2								1											
			Quadrant 3									1					1					
			Quadrant 4								1											
					0	0	0	0	0	0	2	1	0	1	0	0	1	1	25	36	0.02	0

PROJECT REERENCE NO.	SHEET NO.
44917.3.4	13

*NOTE: FIELD FIT AS DIRECTED BY THE ENGINEER

GUILFORD COUNTY CURB RAMP CONTRACT - 44917.3.4

Inset #	Municipality	Major Route	Minor Route	Int. ID #	2' - 6" CURB & GUTTER	4" CONCRETE SIDEWALK	RETROFIT EXISTING CURB RAMP	GENERIC PAVING ITEM (REMOVE AND REPLACE CONCRETE CURB RAMPS - TYPE 1A)	GENERIC PAVING ITEM (REMOVE AND REPLACE CONCRETE CURB RAMPS - TYPE 1 MOD)	GENERIC PAVING ITEM (REMOVE AND REPLACE CONCRETE CURB RAMPS - TYPE 2)	GENERIC PAVING ITEM (REMOVE AND REPLACE CONCRETE CURB RAMPS - TYPE 2A)	GENERIC PAVING ITEM (REMOVE AND REPLACE CONCRETE CURB RAMPS - TYPE 2B)	GENERIC PAVING ITEM (REMOVE AND REPLACE CONCRETE CURB RAMPS - TYPE 3)	GENERIC PAVING ITEM (REMOVE AND REPLACE CONCRETE CURB RAMPS - TYPE 3 MOD)	GENERIC PAVING ITEM (REMOVE AND REPLACE CONCRETE CURB RAMPS - TYPE 7)	GENERIC PAVING ITEM (REMOVE CURB RAMP)	ADJUSTMENT OF MB OR WV	TEMPORARY TRAFFIC CONTROL	TEMPORARY SILT FENCE	WATTLE	SEEDING AND MULCHING	JUNCTION BOX (PULL BOX, OVERSIZED, HEAVY DUTY)
8	High Point	SR 1009 (Main Street)	Richardson Avenue															1				
			Quadrant 3							1												
					0	0	0	0	0	1	0	0	0	0	0	0	0	1	0	0	0	0
9	Greensboro	SR 4240 (East Gate City Boulevard)	Dunbar Street															1	25	12	0.02	
			Quadrant 1						1													
			Quadrant 2						1													
			Quadrant 3						1													
			Quadrant 4						1													
					0	0	0	0	4	0	0	0	0	0	0	0	0	1	25	12	0.02	0
10	Greensboro	SR 4240 (East Gate City Boulevard)	Pichard Street															1	25	48	0.02	
			Quadrant 1						1													
			Quadrant 2						1													
			Quadrant 3						1													
			Quadrant 4						1													
					0	0	0	0	4	0	0	0	0	0	0	0	0	1	25	48	0.02	0
11	Greensboro	SR 1546 (Guilford College Road)	SR 1609 (Swing Road)	A174														1	25	12	0.02	
			Quadrant 1											1								
			Quadrant 3					1														
			Quadrant 4									1										
					0	0	0	1	0	0	0	1	0	1	0	0	0	1	25	12	0.02	0
12	Greensboro	SR 1007 (Randleman Road)	Teague Street															1	25	12	0.01	
			Quadrant 1						1													
			Quadrant 2						1													
					0	0	0	0	2	0	0	0	0	0	0	0	0	1	25	12	0.01	0
13	High Point	SR 1009 (Main Street)	Dayton Avenue															1	25	24	0.01	
			Quadrant 3						1													
			Quadrant 4						1													
					0	0	0	0	2	0	0	0	0	0	0	0	0	1	25	24	0.01	0
14	High Point	SR 1009 (Main Street)	Plaza Lane															1	25	12	0.01	
			Quadrant 3	J033					1													
			Quadrant 4					1														
					0	0	0	1	1	0	0	0	0	0	0	0	0	1	25	12	0.01	0
				TOTALS	**30**	**17**	**1**	**2**	**17**	**1**	**5**	**7**	**3**	**5**	**4**	**2**	**1**	**1**	**300**	**252**	**0.18**	**1**

PROJECT REFERENCE NO.	SHEET NO.
44917.3.4	EC - 1

R-5787C

EROSION CONTROL DETAIL

NOTES: Less than 5' - 10' undisturbed buffer from ROW, ditchline, water feature, or drainage inlet, add BMP.

BMP Options: Wattle or Silt Fence

< 5' - 10' Undisturbed buffer add BMP

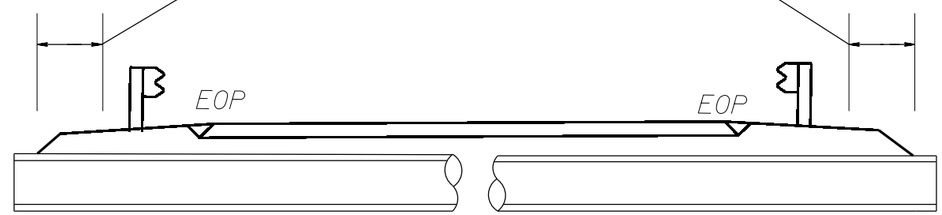

Pipe/Culvert

< 5' - 10' Undisturbed buffer from jurisdictional feature add BMP

< 5' - 10' Undisturbed buffer from ditchline, add BMP

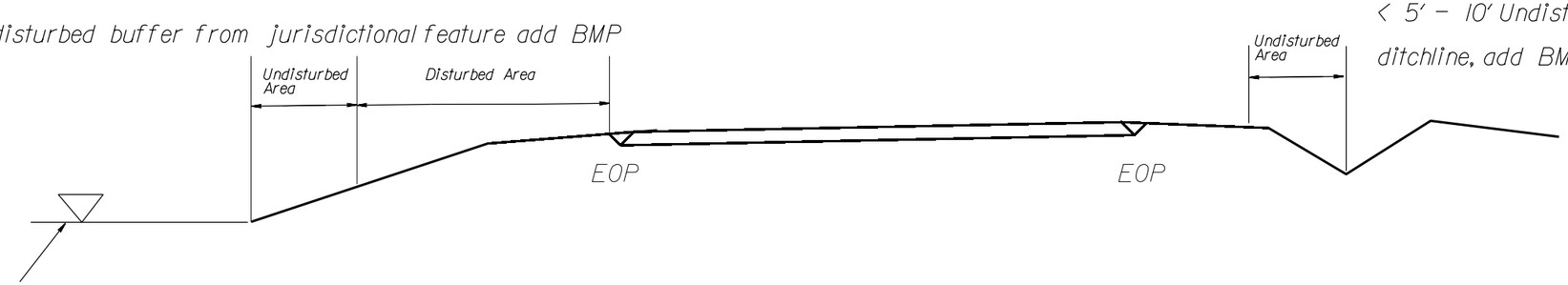

Jurisdictional Feature

Use BMP's if berms, shoulders and/or frontslopes and/or ditchline and/or backslopes are disturbed

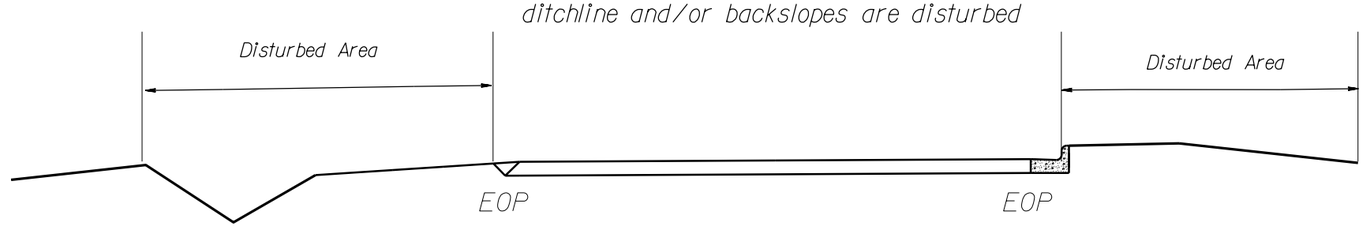

< 5' - 10' Undisturbed buffer from inlet, add wattle

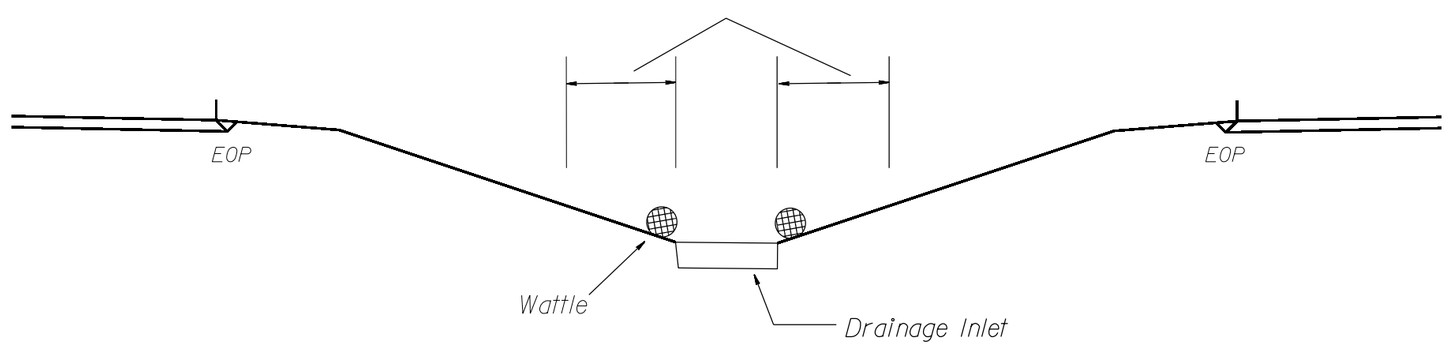

NOT TO SCALE

DIVISION OF HIGHWAYS
STATE OF NORTH CAROLINA

SOIL STABILIZATION TIMEFRAMES

SITE DESCRIPTION	STABILIZATION TIME	TIMEFRAME EXCEPTIONS
PERIMETER DIKES, SWALES, DITCHES AND SLOPES	7 DAYS	NONE
HIGH QUALITY WATER (HQW) ZONES	7 DAYS	NONE
SLOPES STEEPER THAN 3:1	7 DAYS	IF SLOPES ARE 10′ OR LESS IN LENGTH AND ARE NOT STEEPER THAN 2:1, 14 DAYS ARE ALLOWED.
SLOPES 3:1 OR FLATTER	14 DAYS	7 DAYS FOR SLOPES GREATER THAN 50′ IN LENGTH.
ALL OTHER AREAS WITH SLOPES FLATTER THAN 4:1	14 DAYS	NONE, EXCEPT FOR PERIMETERS AND HQW ZONES.

THESE EROSION AND SEDIMENT CONTROL PLANS COMPLY
WITH THE REGULATIONS SET FORTH BY THE
NCG–010000 GENERAL CONSTRUCTION PERMIT EFFECTIVE AUGUST 3, 2011
ISSUED BY THE NORTH CAROLINA DEPARTMENT OF ENVIRONMENT AND
NATURAL RESOURCES DIVISION OF WATER QUALITY.

PROJECT REFERENCE NO.	SHEET NO.
44917.3.4	EC – 3

R–5787C

REINFORCED TEMPORARY SILT FENCE DETAIL

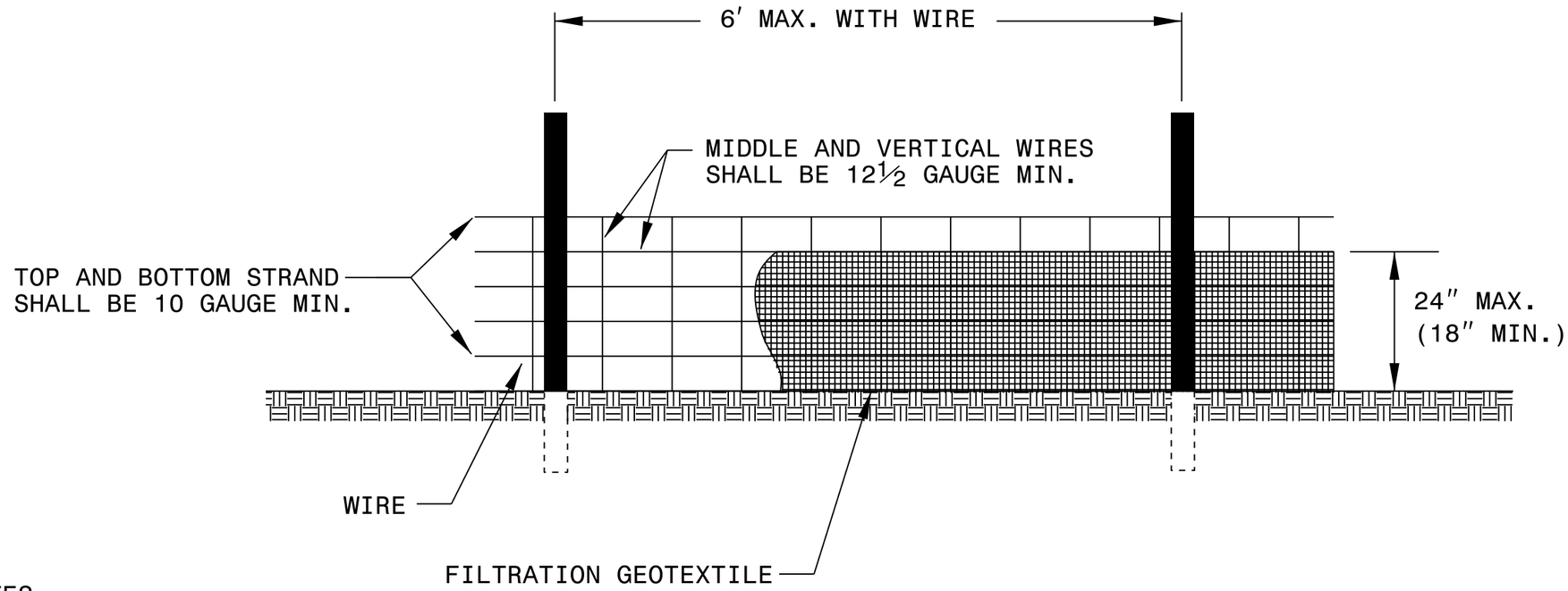

NOTES

USE FILTRATION GEOTEXTILE A MINIMUM OF 36″ IN WIDTH AND FASTEN ADEQUATELY TO THE POSTS AND WIRE AS DIRECTED.

USE WIRE A MINIMUM OF 32″ IN WIDTH AND WITH A MINIMUM OF 6 LINE WIRES WITH 12″ STAY SPACING.

PROVIDE 5′-0″ STEEL POST OF THE SELF-FASTENER ANGLE STEEL TYPE.

FOR MECHANICAL SLICING METHOD INSTALLATION, GEOTEXTILE SHALL BE A MAXIMUM OF 18″ ABOVE GROUND SURFACE.

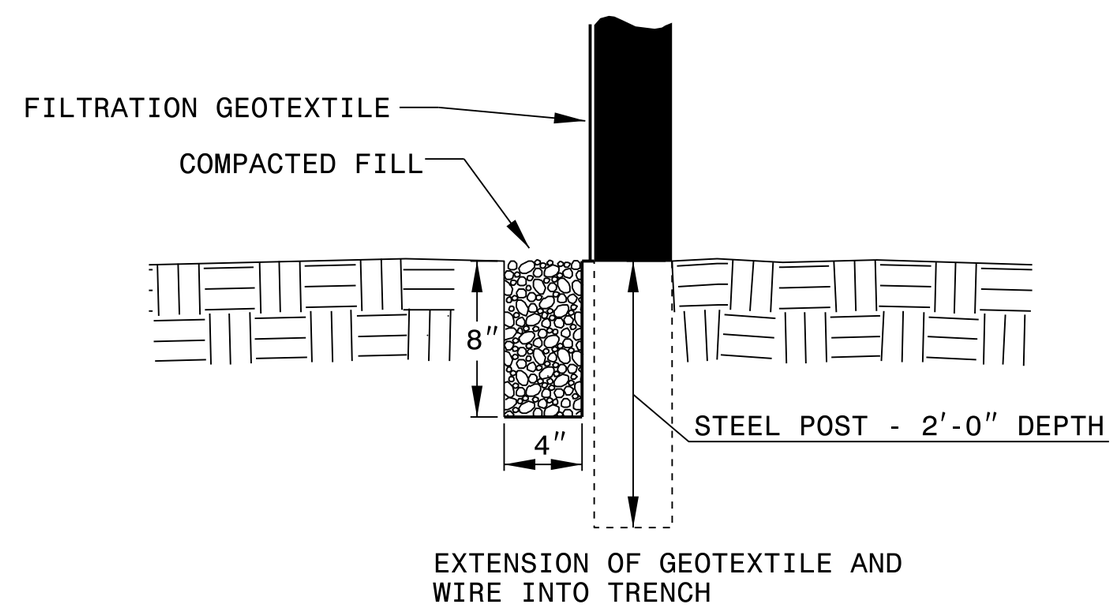

PROJECT REFERENCE NO.	SHEET NO.
44917.3.4	EC – 4

R–5787C

WATTLE DETAIL

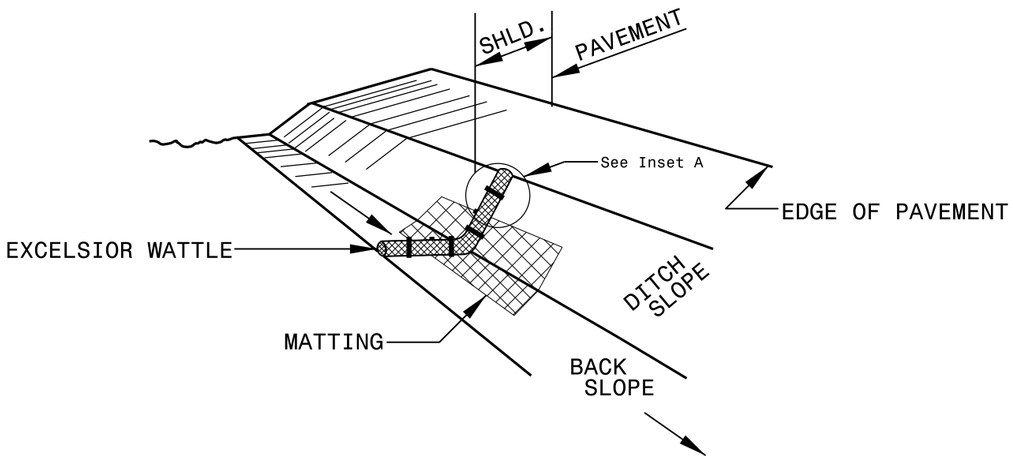

ISOMETRIC VIEW

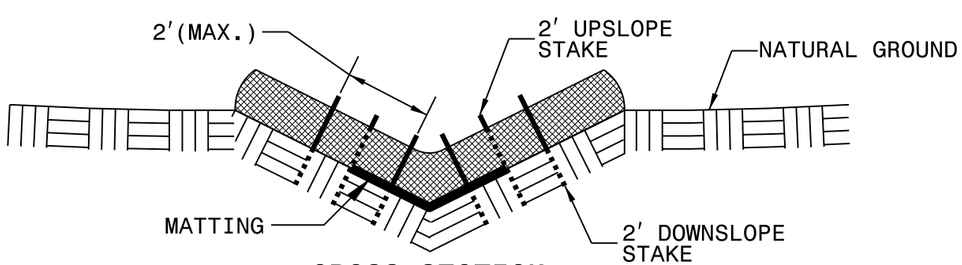

CROSS SECTION VEE DITCH

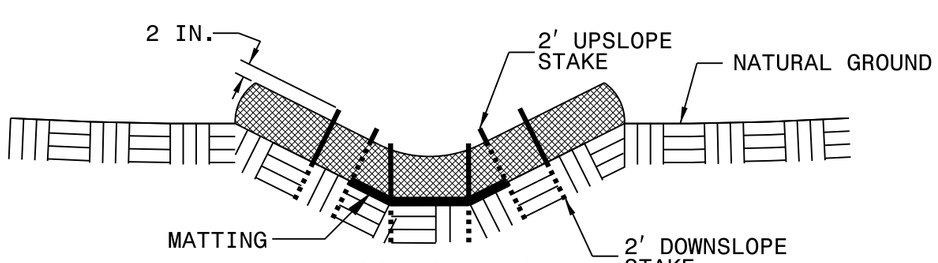

CROSS SECTION TRAPEZOIDAL DITCH

NOTES:

USE MINIMUM 12 IN. DIAMETER EXCELSIOR WATTLE.

USE 2 FT. WOODEN STAKES WITH A 2 IN. BY 2 IN. NOMINAL CROSS SECTION.

ONLY INSTALL WATTLE(S) TO A HEIGHT IN DITCH SO FLOW WILL NOT WASH AROUND WATTLE AND SCOUR DITCH SLOPES AND AS DIRECTED.

INSTALL A MINIMUM OF 2 UPSLOPE STAKES AND 4 DOWNSLOPE STAKES AT AN ANGLE TO WEDGE WATTLE TO BOTTOM OF DITCH.

PROVIDE STAPLES MADE OF 0.125 IN. DIAMETER STEEL WIRE FORMED INTO A U SHAPE NOT LESS THAN 12″ IN LENGTH.

INSTALL STAPLES APPROXIMATELY EVERY 1 LINEAR FOOT ON BOTH SIDES OF WATTLE AND AT EACH END TO SECURE IT TO THE SOIL.

INSTALL MATTING IN ACCORDANCE WITH SECTION 1631 OF THE STANDARD SPECIFICATIONS.

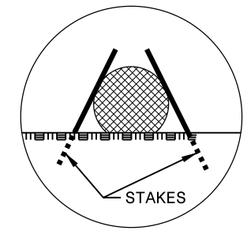

INSET A

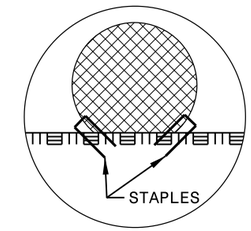

INSET B

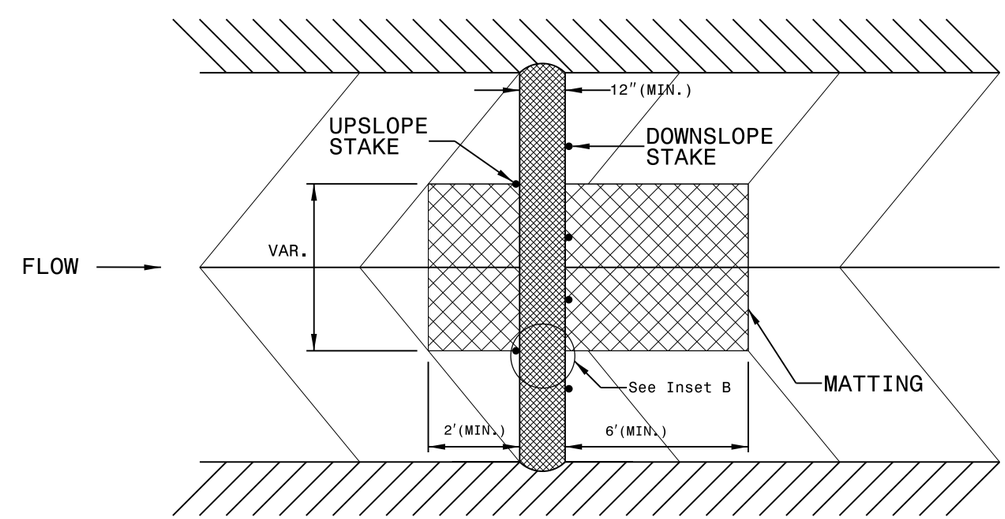

TOP VIEW