DocuSign Envelope ID: 6B29132E-23E9-4ACA-B5E5-C984DDD28CB7

TIP PROJECT: 17BP.7.R.105

CONTRACT:

| STATE | STATE PROJECT REFERENCE NO. | SHEET NO. | TOTAL SHEETS |
|---|---|---|---|
| N.C. | 17BP.7.R.105 | 1 | |

| STATE PROJECT NO. | F.A. PROJ. NO. | DESCRIPTION |
|---|---|---|
| 45353.1.FD30 | BRZ-3118(1) | P.E. |
| 45353.2.FD30 | BRZ-3118(1) | R/W |
| 17BP.7.R.105 | | CONSTRUCTION |

# STATE OF NORTH CAROLINA
# DIVISION OF HIGHWAYS

# GUILFORD COUNTY

LOCATION: BRIDGE NO. 229 OVER NORTH PRONG STINKING QUARTER CREEK ON SR 3118 (SHATTERLY ROAD)

TYPE OF WORK: GRADING, PAVING, DRAINAGE AND STRUCTURE

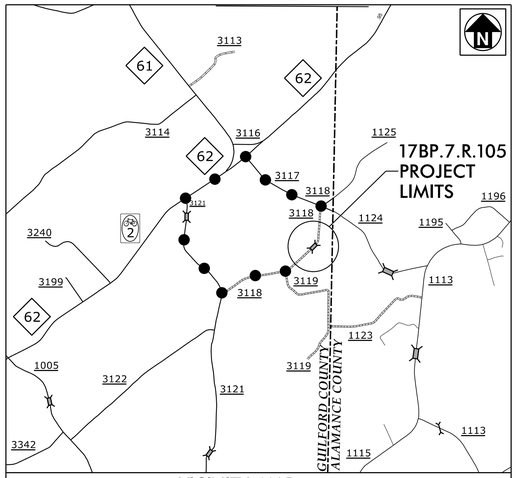


VICINITY MAP
(NOT TO SCALE)
OFF-SITE DETOUR

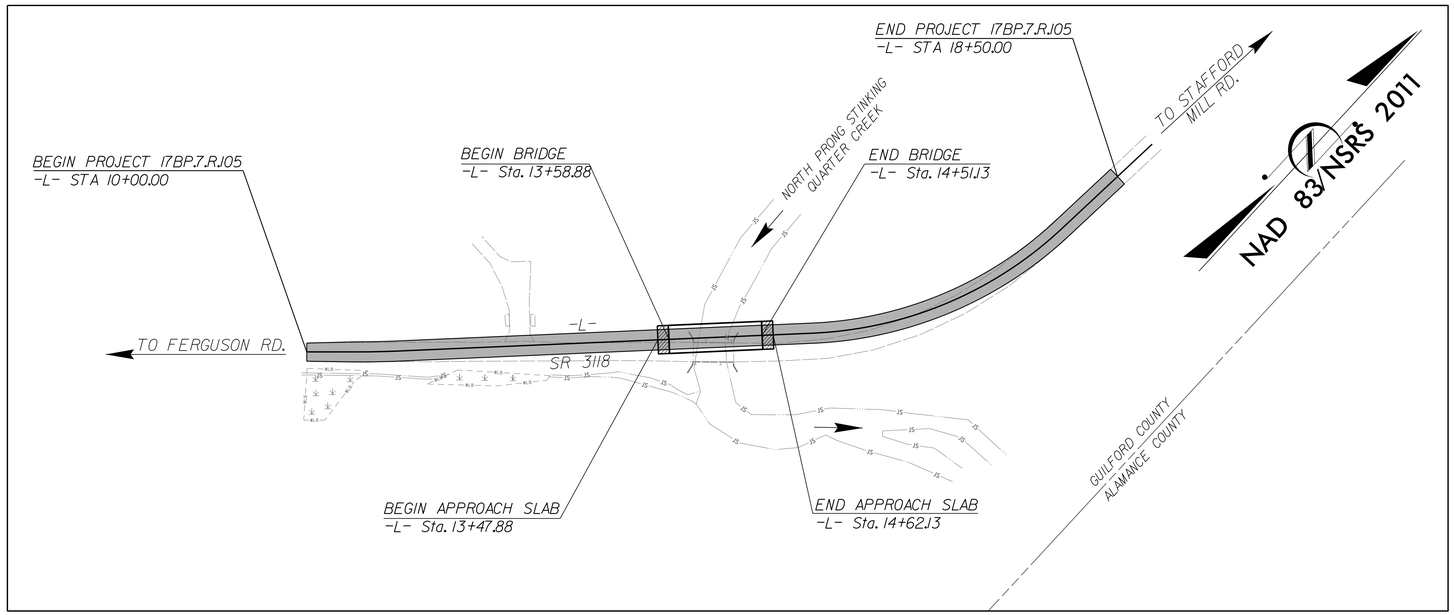


*DESIGN EXCEPTION:
MIN. HORIZONTAL CURVE RADIUS
HORIZONTAL SSD
SUPERELEVATION

DOCUMENT NOT CONSIDERED FINAL UNLESS ALL SIGNATURES COMPLETED

STATE OF NORTH CAROLINA DEPARTMENT OF TRANSPORTATION

## DESIGN DATA

ADT 2011 = 570

V = 55 MPH

SUBREGIONAL TIER

LOCAL

## PROJECT LENGTH

| | | |
|---|---|---|
| LENGTH ROADWAY TIP PROJECT | = | 0.144 MILES |
| LENGTH STRUCTURE TIP PROJECT | = | 0.017 MILES |
| TOTAL LENGTH TIP PROJECT | = | 0.161 MILES |

Prepared in the Office of Hatch Mott MacDonald for

**DIVISION 7**

NORTH CAROLINA DEPARTMENT OF TRANSPORTATION

2012 STANDARD SPECIFICATIONS

LETTING DATE:

TIM JORDAN, PE
PROJECT ENGINEER

DAVID FUH, PE
HYDRAULICS ENGINEER

NCDOT CONTACT: TIM POWERS, PE
DIVISION BRIDGE PROGRAM MANAGER

ROADWAY DESIGN ENGINEER

NORTH CAROLINA PROFESSIONAL SEAL 21102 ENGINEER JAMES THOMAS MOTT JORDAN

DocuSigned by: James Thomas Mott Jordan
SIGNATURE: 5/18/2016 P.E.

HYDRAULICS ENGINEER

NORTH CAROLINA PROFESSIONAL SEAL 19732 ENGINEER SHULEI CHEN FUH

DocuSigned by: Shulei Chen Fuh
F14BC27398BE4... 5/18/2016 P.E.
SIGNATURE:

PLANS PREPARED BY:

Hatch Mott MacDonald
P0 Box 700
Fuquay-Varina, NC 27526
(919) 552-2253
(919) 552-2254 (Fax)
www.hatchmott.com
LICENSE NO. F-0669

ICA Engineering
5121 Kingdom Way, Suite 100
Raleigh, NC 27607
NC License No: F-0258

5/18/2016
11:37:52 AM
R:\Roadway\Proj\BD-5107AC_rdy_tsh.dgn
jor66165

DocuSign Envelope ID: 6B29132E-23E9-4ACA-B5E5-C984DDD28CB7

GENERAL NOTES:

2012 SPECIFICATIONS
EFFECTIVE: 01-17-2012
REVISED: 10-31-2014

GRADE LINE:
GRADING AND SURFACING:

THE GRADE LINES SHOWN DENOTE THE FINISHED ELEVATION OF THE PROPOSED SURFACING AT GRADE POINTS SHOWN ON THE TYPICAL SECTIONS. GRADE LINES MAY BE ADJUSTED AT THEIR BEGINNING AND ENDING AND AT STRUCTURES AS DIRECTED BY THE ENGINEER IN ORDER TO SECURE A PROPER TIE-IN.

CLEARING:

CLEARING ON THIS PROJECT SHALL BE PERFORMED TO THE LIMITS ESTABLISHED BY METHOD II.

SUPERELEVATION:

ALL CURVES ON THIS PROJECT SHALL BE SUPERELEVATED IN ACCORDANCE WITH STD. NO. 225.04 USING THE RATE OF SUPERELEVATION AND RUNOFF SHOWN ON THE PLANS. SUPERELEVATION IS TO BE REVOLVED ABOUT THE GRADE POINTS SHOWN ON THE TYPICAL SECTIONS.

SHOULDER CONSTRUCTION:

ASPHALT, EARTH, AND CONCRETE SHOULDER CONSTRUCTION ON THE HIGH SIDE OF SUPERELEVATED CURVES SHALL BE IN ACCORDANCE WITH STD. NO. 560.01.

GUARDRAIL:

THE GUARDRAIL LOCATIONS SHOWN ON THE PLANS MAY BE ADJUSTED DURING CONSTRUCTION AS DIRECTED BY THE ENGINEER. THE CONTRACTOR SHOULD CONSULT WITH THE ENGINEER PRIOR TO ORDERING GUARDRAIL MATERIAL.

SUBSURFACE PLANS:

NO SUBSURFACE PLANS ARE AVAILABLE ON THIS PROJECT. THE CONTRACTOR SHOULD MAKE HIS OWN INVESTIGATION AS TO THE SUBSURFACE CONDITIONS.

END BENTS:

THE ENGINEER SHALL CHECK THE STRUCTURE END BENT PLANS, DETAILS, AND CROSS-SECTION PRIOR TO SETTING OF THE SLOPE STAKES FOR THE EMBANKMENT OR EXCAVATION APPROACHING A BRIDGE.

UTILITIES:

UTILITY OWNERS ON THIS PROJECT ARE DUKE ENERGY AND AT&T.

ANY RELOCATION OF EXISTING UTILITIES WILL BE ACCOMPLISHED BY OTHERS.

RIGHT-OF-WAY MARKERS:

ALL RIGHT-OF-WAY MARKERS ON THIS PROJECT SHALL BE PLACED BY OTHERS.

INDEX OF SHEETS


| SHEET NUMBER | DESCRIPTION |
|---|---|
| 1 | TITLE SHEET |
| 1-A | INDEX OF SHEETS, GENERAL NOTES, AND LIST OF STANDARD DRAWINGS |
| 1-B | CONVENTIONAL SYMBOLS |
| 2 | PAVEMENT SCHEDULE AND TYPICAL SECTIONS |
| 2-A | DETAIL FOR STRUCTURE ANCHOR UNITS |
| 4 | PLAN SHEET AND PROFILE SHEET |
| TMP-1 THRU TMP-3 | TRAFFIC MANAGEMENT PLANS |
| EC-1 THRU EC-5 | EROSION CONTROL PLANS |
| RF-1 | REFORESTATION DETAIL |
| UO-1 | UTILITIES BY OTHERS PLAN |
| X-1 THRU X-4 | CROSS-SECTIONS |
| S-1 THRU S-16 | STRUCTURE PLANS |
| SN | STRUCTURE NOTES |


EFF. 01-17-2012
REV. 02-29-2016

2012 ROADWAY ENGLISH STANDARD DRAWINGS

The following Roadway Standards as appear in "Roadway Standard Drawings" Highway Design Branch - N. C. Department of Transportation - Raleigh, N. C., Dated January, 2012 are applicable to this project and by reference hereby are considered a part of these plans:

STD.NO. TITLE

DIVISION 2 - EARTHWORK
200.02 Method of Clearing - Method II
225.02 Guide for Grading Subgrade - Secondary and Local
225.04 Method of Obtaining Superelevation - Two Lane Pavement

DIVISION 3 - PIPE CULVERTS
300.01 Method of Pipe Installation

DIVISION 4 - MAJOR STRUCTURES
422.11 Bridge Approach Fills - Sub Regional Tier

DIVISION 5 - SUBGRADE, BASES AND SHOULDERS
560.01 Method of Shoulder Construction - High Side of Superelevated Curve - Method I

DIVISION 6 - ASPHALT BASES AND PAVEMENTS
654.01 Pavement Repairs

DIVISION 8 - INCIDENTALS
840.00 Concrete Base Pad for Drainage Structures
840.25 Anchorage for Frames - Brick or Concrete or Precast
840.29 Frames and Narrow Slot Flat Grates
840.31 Concrete Junction Box - 12" thru 66" Pipe
840.32 Brick Junction Box - 12" thru 66" Pipe
840.35 Traffic Bearing Grated Drop Inlet - for Cast Iron Double Frame and Grates
840.46 Traffic Bearing Precast Drainage Structure
840.54 Manhole Frame and Cover
840.66 Drainage Structure Steps
846.01 Concrete Curb, Gutter and Curb & Gutter
846.04 Drop Inlet Installation in Shoulder Berm Gutter
862.01 Guardrail Placement
862.02 Guardrail Installation
876.02 Guide for Rip Rap at Pipe Outlets
876.04 Drainage Ditches with Class 'B' Rip Rap

| PROJECT REFERENCE | SHEET NO. |
|---|---|
| 17BP.7.R.105 - GUILFORD #229 | 1-A |

ROADWAY DESIGN ENGINEER
NORTH CAROLINA PROFESSIONAL SEAL 21102 ENGINEER TIMOTHY JORDAN
DocuSigned by:
5/18/2016
HATCH MOTT MACDONALD I & E, LLC
LICENSE NO. F-0669

**DOCUMENT NOT CONSIDERED FINAL UNLESS ALL SIGNATURES COMPLETED**

Prepared in the Office of: Hatch Mott MacDonald PO Box 700 Fuquay-Varina, NC 27526 www.hatchmott.com

jor66165
R:\Roadway\Proj\BD-5107AC_rdy_pshtA.dgn
5/18/2016 11:37:56 AM

DocuSign Envelope ID: 6B29132E-23E9-4ACA-B5E5-C984DDD28CB7

| PROJECT REFERENCE | SHEET NO. |
|---|---|
| 17BP.7.R.105 – GUILFORD #229 | 1–B |

***Note: Not to Scale***

****S.U.E. = Subsurface Utility Engineering***

STATE OF NORTH CAROLINA
DIVISION OF HIGHWAYS

# CONVENTIONAL PLAN SHEET SYMBOLS

## *BOUNDARIES AND PROPERTY:*

- State Line
- County Line
- Township Line
- City Line
- Reservation Line
- Property Line
- Existing Iron Pin — EIP
- Property Corner
- Property Monument — ECM
- Parcel/Sequence Number — 123
- Existing Fence Line
- Proposed Woven Wire Fence
- Proposed Chain Link Fence
- Proposed Barbed Wire Fence
- Existing Wetland Boundary — WLB
- Proposed Wetland Boundary — WLB
- Existing Endangered Animal Boundary — EAB
- Existing Endangered Plant Boundary — EPB
- Known Soil Contamination: Area or Site
- Potential Soil Contamination: Area or Site

## *BUILDINGS AND OTHER CULTURE:*

- Gas Pump Vent or U/G Tank Cap
- Sign — S
- Well — W
- Small Mine
- Foundation
- Area Outline
- Cemetery
- Building
- School
- Church
- Dam

## *HYDROLOGY:*

- Stream or Body of Water
- Hydro, Pool or Reservoir
- Jurisdictional Stream — JS
- Buffer Zone 1 — BZ 1
- Buffer Zone 2 — BZ 2
- Flow Arrow
- Disappearing Stream
- Spring
- Wetland
- Proposed Lateral, Tail, Head Ditch — FLOW
- False Sump

## *RAILROADS:*

- Standard Gauge — CSX TRANSPORTATION
- RR Signal Milepost — MILEPOST 35
- Switch — SWITCH
- RR Abandoned
- RR Dismantled

## *RIGHT OF WAY:*

- Baseline Control Point
- Existing Right of Way Marker
- Existing Right of Way Line
- Proposed Right of Way Line — RW
- Proposed Right of Way Line with Iron Pin and Cap Marker — RW
- Proposed Right of Way Line with Concrete or Granite R/W Marker — RW
- Proposed Control of Access Line with Concrete C/A Marker — CA
- Existing Control of Access — CA
- Proposed Control of Access — CA
- Existing Easement Line — E
- Proposed Temporary Construction Easement — E
- Proposed Temporary Drainage Easement — TDE
- Proposed Permanent Drainage Easement — PDE
- Proposed Permanent Drainage / Utility Easement — DUE
- Proposed Permanent Utility Easement — PUE
- Proposed Temporary Utility Easement — TUE
- Proposed Aerial Utility Easement — AUE
- Proposed Permanent Easement with Iron Pin and Cap Marker

## *ROADS AND RELATED FEATURES:*

- Existing Edge of Pavement
- Existing Curb
- Proposed Slope Stakes Cut — C
- Proposed Slope Stakes Fill — F
- Proposed Curb Ramp — CR
- Existing Metal Guardrail
- Proposed Guardrail
- Existing Cable Guiderail
- Proposed Cable Guiderail
- Equality Symbol
- Pavement Removal

## *VEGETATION:*

- Single Tree
- Single Shrub
- Hedge
- Woods Line
- Orchard
- Vineyard — Vineyard

## *EXISTING STRUCTURES:*

MAJOR:

- Bridge, Tunnel or Box Culvert — CONC
- Bridge Wing Wall, Head Wall and End Wall — CONC WW

MINOR:

- Head and End Wall — CONC HW
- Pipe Culvert
- Footbridge
- Drainage Box: Catch Basin, DI or JB — CB
- Paved Ditch Gutter
- Storm Sewer Manhole — S
- Storm Sewer — S

## *UTILITIES:*

POWER:

- Existing Power Pole
- Proposed Power Pole
- Existing Joint Use Pole
- Proposed Joint Use Pole
- Power Manhole — P
- Power Line Tower
- Power Transformer
- U/G Power Cable Hand Hole
- H-Frame Pole
- Recorded U/G Power Line — P
- Designated U/G Power Line (S.U.E.*) — P

TELEPHONE:

- Existing Telephone Pole
- Proposed Telephone Pole
- Telephone Manhole — T
- Telephone Booth
- Telephone Pedestal — T
- Telephone Cell Tower
- U/G Telephone Cable Hand Hole — HH
- Recorded U/G Telephone Cable — T
- Designated U/G Telephone Cable (S.U.E.*) — T
- Recorded U/G Telephone Conduit — TC
- Designated U/G Telephone Conduit (S.U.E.*) — TC
- Recorded U/G Fiber Optics Cable — T FO
- Designated U/G Fiber Optics Cable (S.U.E.*) — T FO

WATER:

- Water Manhole — W
- Water Meter
- Water Valve
- Water Hydrant
- Recorded U/G Water Line — W
- Designated U/G Water Line (S.U.E.*) — W
- Above Ground Water Line — A/G Water

TV:

- TV Satellite Dish
- TV Pedestal — C
- TV Tower
- U/G TV Cable Hand Hole — HH
- Recorded U/G TV Cable — TV
- Designated U/G TV Cable (S.U.E.*) — TV
- Recorded U/G Fiber Optic Cable — TV FO
- Designated U/G Fiber Optic Cable (S.U.E.*) — TV FO

GAS:

- Gas Valve
- Gas Meter
- Recorded U/G Gas Line — G
- Designated U/G Gas Line (S.U.E.*) — G
- Above Ground Gas Line — A/G Gas

SANITARY SEWER:

- Sanitary Sewer Manhole
- Sanitary Sewer Cleanout
- U/G Sanitary Sewer Line — SS
- Above Ground Sanitary Sewer — A/G Sanitary Sewer
- Recorded SS Forced Main Line — FSS
- Designated SS Forced Main Line (S.U.E.*) — FSS

MISCELLANEOUS:

- Utility Pole
- Utility Pole with Base
- Utility Located Object
- Utility Traffic Signal Box — S
- Utility Unknown U/G Line — ?UTL
- U/G Tank; Water, Gas, Oil
- Underground Storage Tank, Approx. Loc. — UST
- A/G Tank; Water, Gas, Oil
- Geoenvironmental Boring
- U/G Test Hole (S.U.E.*)
- Abandoned According to Utility Records — AATUR
- End of Information — E.O.I.

jor66165
R:\Roadway\Proj\BD-5107AC_rdy_psh1B.dgn
5/18/2016 11:37:58 AM

DocuSign Envelope ID: 6B29132E-23E9-4ACA-B5E5-C984DDD28CB7

| PROJECT REFERENCE | SHEET NO. |
|---|---|
| 17BP.7.R.105 – GUILFORD #229 | 2 |
| ROADWAY DESIGN ENGINEER | HYDRAULICS ENGINEER |

NORTH CAROLINA PROFESSIONAL SEAL 21102 ENGINEER JAMES TIMOTHY JORDAN
DocuSigned by: James Timothy Jordan
5/18/2016
HATCH MOTT MACDONALD I & E, LLC LICENSE NO. F-0669

**DOCUMENT NOT CONSIDERED FINAL UNLESS ALL SIGNATURES COMPLETED**

Prepared in the Office of: Hatch Mott MacDonald PO Box 700 Fuquay-Varina, NC 27526 www.hatchmott.com

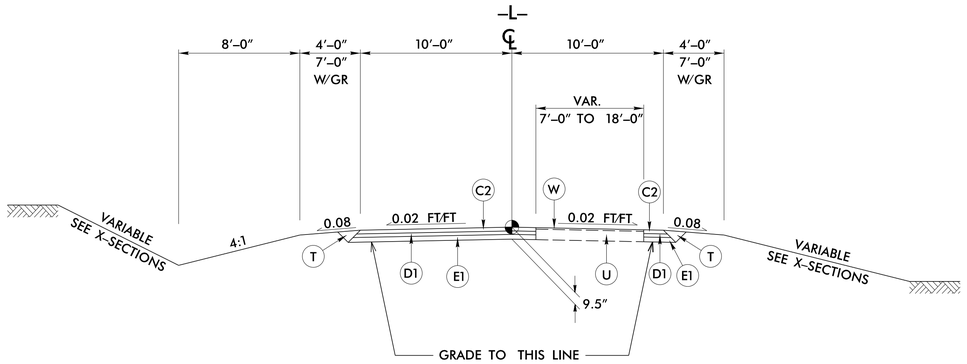


## TYPICAL SECTION NO. 1

TRANSITION FROM EXISTING TO TYPICAL SECTION NO. 1:
–L– STA 10+00.00 TO 10+50.00

USE TYPICAL SECTION NO. 1:
–L– STA 10+50.00 TO 13+58.88 (BEGIN BRIDGE)
–L– STA 16+75.00 TO 18+00.00

TRANSITION FROM TYPICAL SECTION NO. 1 TO EXISTING:
–L– STA 18+00.00 TO 18+50.00

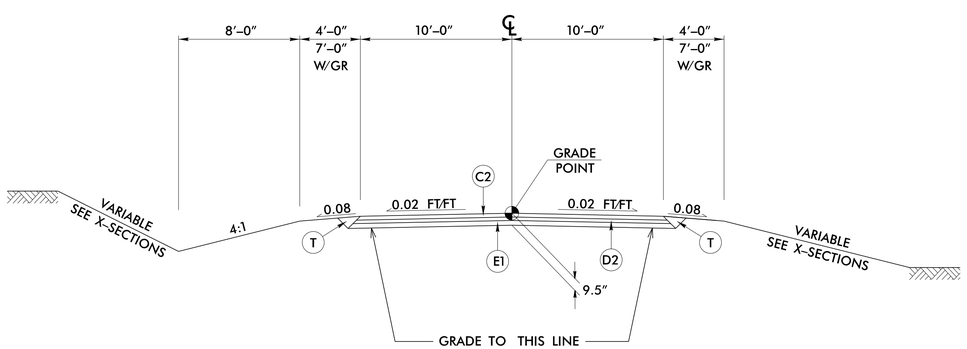


## TYPICAL SECTION NO. 2

USE TYPICAL SECTION NO. 2:
–L– STA 14+51.13 (END BRIDGE) TO 16+75.00

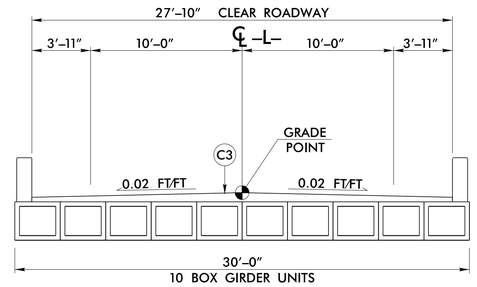


## TYPICAL SECTION NO. 3

USE TYPICAL SECTION NO. 3:
–L– STA 13+58.88 (BEGIN BRIDGE) TO 14+51.13 (END BRIDGE)

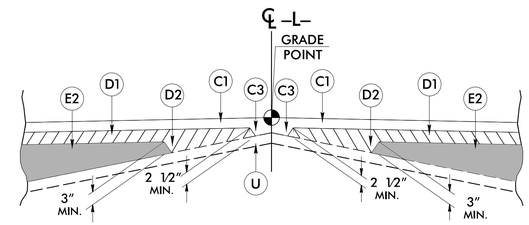


Detail Showing Method of Wedging

| PAVEMENT SCHEDULE | |
|---|---|
| C1 | PROP. APPROX. 1½" ASPHALT CONCRETE SURFACE COURSE, TYPE S9.5B, AT AN AVERAGE RATE OF 168 LBS. PER SQ. YD. |
| C2 | PROP. APPROX. 3" ASPHALT CONCRETE SURFACE COURSE, TYPE S9.5B, AT AN AVERAGE RATE OF 168 LBS. PER SQ. YD. IN EACH OF TWO LAYERS. |
| C3 | PROP. VAR. DEPTH ASPHALT CONCRETE SURFACE COURSE, TYPE S9.5B, AT AN AVERAGE RATE OF 112 LBS. PER SQ. YD. PER 1" DEPTH. TO BE PLACED IN LAYERS NOT LESS THAN 1½" IN DEPTH OR GREATER THAN 2" IN DEPTH. |
| D1 | PROP. APPROX. 2½" ASPHALT CONCRETE INTERMEDIATE COURSE, TYPE I19.0B, AT AN AVERAGE RATE OF 285 LBS. PER SQ. YD. |
| D2 | PROP. VAR. DEPTH ASPHALT CONCRETE INTERMEDIATE COURSE, TYPE I19.0B, AT AN AVERAGE RATE OF 114 LBS. PER SQ. YD. PER 1" DEPTH, TO BE PLACED IN LAYERS NOT LESS THAN 2½" IN DEPTH OR GREATER THAN 4" IN DEPTH. |
| E1 | PROP. APPROX. 4" ASPHALT CONCRETE BASE COURSE, TYPE B25.0B, AT AN AVERAGE RATE OF 456 LBS. PER SQ. YD. |
| E2 | PROP. VAR. DEPTH ASPHALT CONCRETE BASE COURSE, TYPE B25.0B, AT AN AVERAGE RATE OF 114 LBS. PER SQ. YD. PER 1" DEPTH TO BE PLACED IN LAYERS NOT LESS THAN 3" IN DEPTH OR GREATER THAN 5½" IN DEPTH. |
| T | EARTH MATERIAL. |
| U | EXISTING PAVEMENT. |
| W | WEDGING (SEE DETAIL SHOWING METHOD OF WEDGING). |

NOTE: PAVEMENT EDGE SLOPES ARE 1:1 UNLESS SHOWN OTHERWISE.

jor66165
R:\Roadway\Proj\BD-5107AC_rdy_typ.dgn
5/18/2016 11:37:54 AM

$$$$$SYSTIME$$$$
$$$$$$$$$$$$$$$$DGN$$$$$$$$$$$$$$$$
$$$USERNAME$$$

STATE OF
NORTH CAROLINA
DEPT. OF TRANSPORTATION
DIVISION OF HIGHWAYS
RALEIGH, N.C.

ENGLISH DETAIL DRAWING FOR
**STRUCTURE ANCHOR UNITS**
GUARDRAIL ANCHOR UNIT, TYPE III FOR ATTACHMENT TO
RAIL ON BRIDGE - SUB REGIONAL TIER

SHEET 2 OF 7
**862d03**

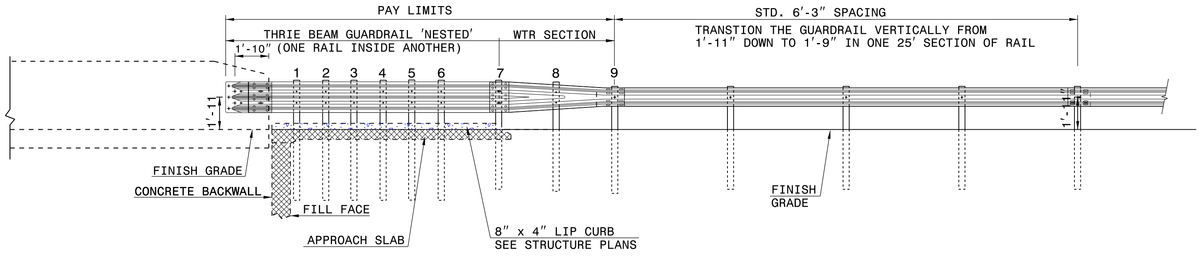


**ELEVATION**

NOTE:
- **POST NOT REQUIRED FOR SKEW ANGLES GREATER THAN 150° OR LESS THAN 30° UNLESS OTHERWISE DIRECTED BY THE ENGINEER.
- *THE DISTANCE FROM END OF BRIDGE RAIL TO CENTER LINE OF THE FIRST POST SHOULD BE 11½" IF CONCRETE BACKWALL IS NOT PRESENT.
- -SHOULDER BERM GUTTER MUST BE INSTALLED TO THE LIMITS 8" x 4" LIP CURB IS SHOWN IF ANCHOR UNIT IS NOT ADJACENT TO AN APPROACH SLAB.
- -MEASURE GUARDRAIL HEIGHT FROM THE TOP OF ADJACENT SURFACE (SHOULDER, BERM, OR GUTTER).
- -LAP JOINTS IN THE DIRECTION OF TRAFFIC FLOW.
- -SEE SHEET 5 FOR POST SECTIONS 1 THRU 9.

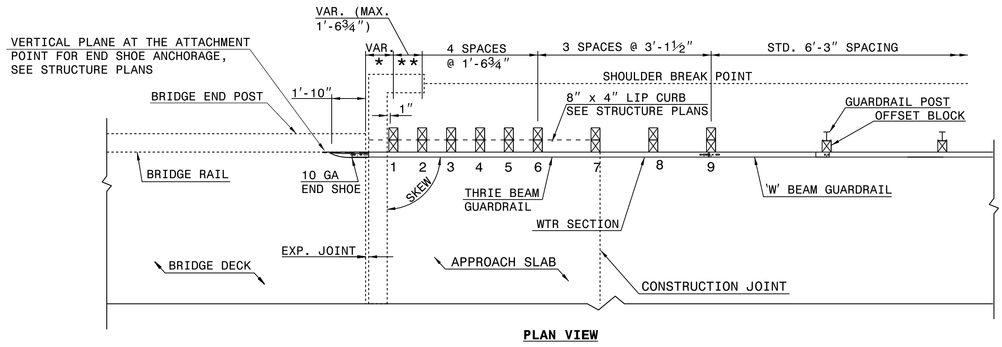


**PLAN VIEW**

## GUARDRAIL ANCHOR UNIT, TYPE III FOR ATTACHMENT TO RAIL ON BRIDGE - SUB REGIONAL TIER


STATE OF
NORTH CAROLINA
DEPT. OF TRANSPORTATION
DIVISION OF HIGHWAYS
RALEIGH, N.C.

ENGLISH DETAIL DRAWING FOR
**STRUCTURE ANCHOR UNITS**
GUARDRAIL ANCHOR UNIT, TYPE III FOR ATTACHMENT TO
RAIL ON BRIDGE - SUB REGIONAL TIER

SHEET 2 OF 7
**862d03**


STATE OF
NORTH CAROLINA
DEPT. OF TRANSPORTATION
DIVISION OF HIGHWAYS
RALEIGH, N.C.

ENGLISH DETAIL DRAWING FOR
**STRUCTURE ANCHOR UNITS**
GUARDRAIL ANCHOR UNIT, TYPE III

SHEET 3 OF 7
**862d03**

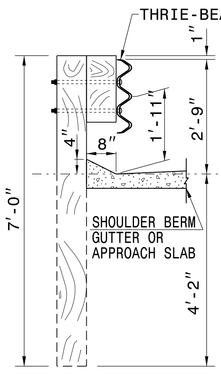


**SECTION OF THRIE BEAM POSTS 1 THRU 6**

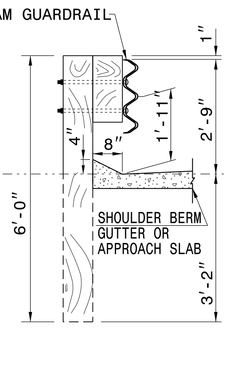


**SECTION OF THRIE BEAM POST 7**

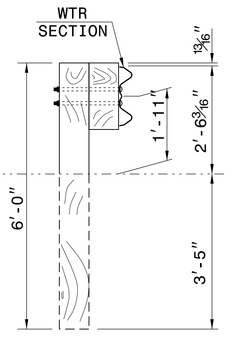


**SECTION OF WTR BEAM POST 8**

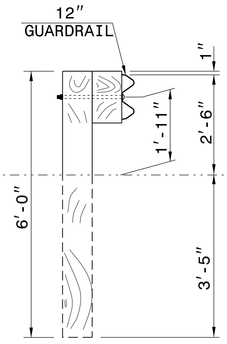


**SECTION OF 'W' BEAM POST 9**

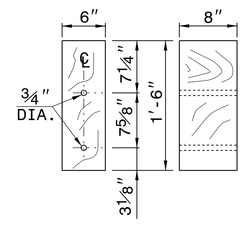


**THRIE BEAM OFFSET BLOCK**

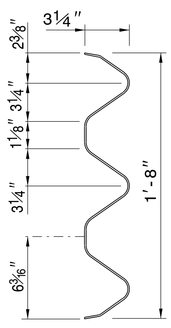


**THRIE-BEAM SECTION**

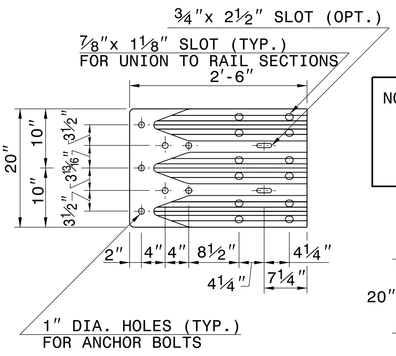


**END SHOE**

NOTE: THE MID POST AND OFFSET BLOCK OF THE WTR SECTION WILL REQUIRE SPECIAL BOLT HOLE DRILLING IN THE THRIE BEAM OFFSET BLOCK AND LINE POST.

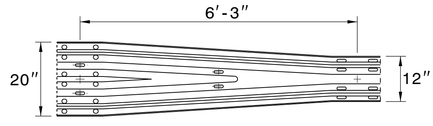


**WTR SECTION**
ELEVATION VIEW

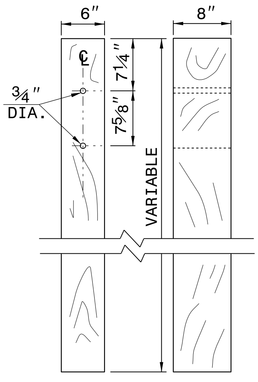


**THRIE BEAM LINE POST**


STATE OF
NORTH CAROLINA
DEPT. OF TRANSPORTATION
DIVISION OF HIGHWAYS
RALEIGH, N.C.

ENGLISH DETAIL DRAWING FOR
**STRUCTURE ANCHOR UNITS**
GUARDRAIL ANCHOR UNIT, TYPE III

SHEET 3 OF 7
**862d03**



**CONTRACT STANDARDS AND DEVELOPMENT UNIT**
Office 919-707-6950 FAX 919-250-4119


**SEE TITLE BLOCK**

ORIGINAL BY: J. HOWERTON DATE: 06-22-12
MODIFIED BY: DATE:
CHECKED BY: DATE:
FILE SPEC.:

PROJECT REFERENCE NO.
17BP.7.R.105 - GUILFORD #229

SHEET NO.
2 - A

DocuSign Envelope ID: 6B29132E-23E9-4ACA-B5E5-C984DDD28CB7

*DESIGN EXCEPTION:
MIN. HORIZONTAL CURVE RADIUS
HORIZONTAL SSD
SUPERELEVATION

| PROJECT REFERENCE | SHEET NO. |
|---|---|
| 17BP.7.R.105 – GUILFORD #229 | 4 |

ROADWAY DESIGN ENGINEER
NORTH CAROLINA PROFESSIONAL SEAL 21102 ENGINEER TIMOTHY JORDAN
DocuSigned by: Timothy Jordan
5/18/2016
HYDRAULICS ENGINEER
NORTH CAROLINA PROFESSIONAL SEAL 19732 ENGINEER JONATHAN CHEN FIH
DocuSigned by: Jonathan Fih
5/18/2016
HATCH MOTT MACDONALD I & E, LLC
LICENSE NO. F-0669

**DOCUMENT NOT CONSIDERED FINAL UNLESS ALL SIGNATURES COMPLETED**

Prepared in the Office of: Hatch Mott MacDonald, PO Box 700, Fuquay-Varina, NC 27526, www.hatchmott.com

VERTICAL SCALE 5' 0 5' 10'
HORIZONTAL SCALE 25' 0 25' 50'

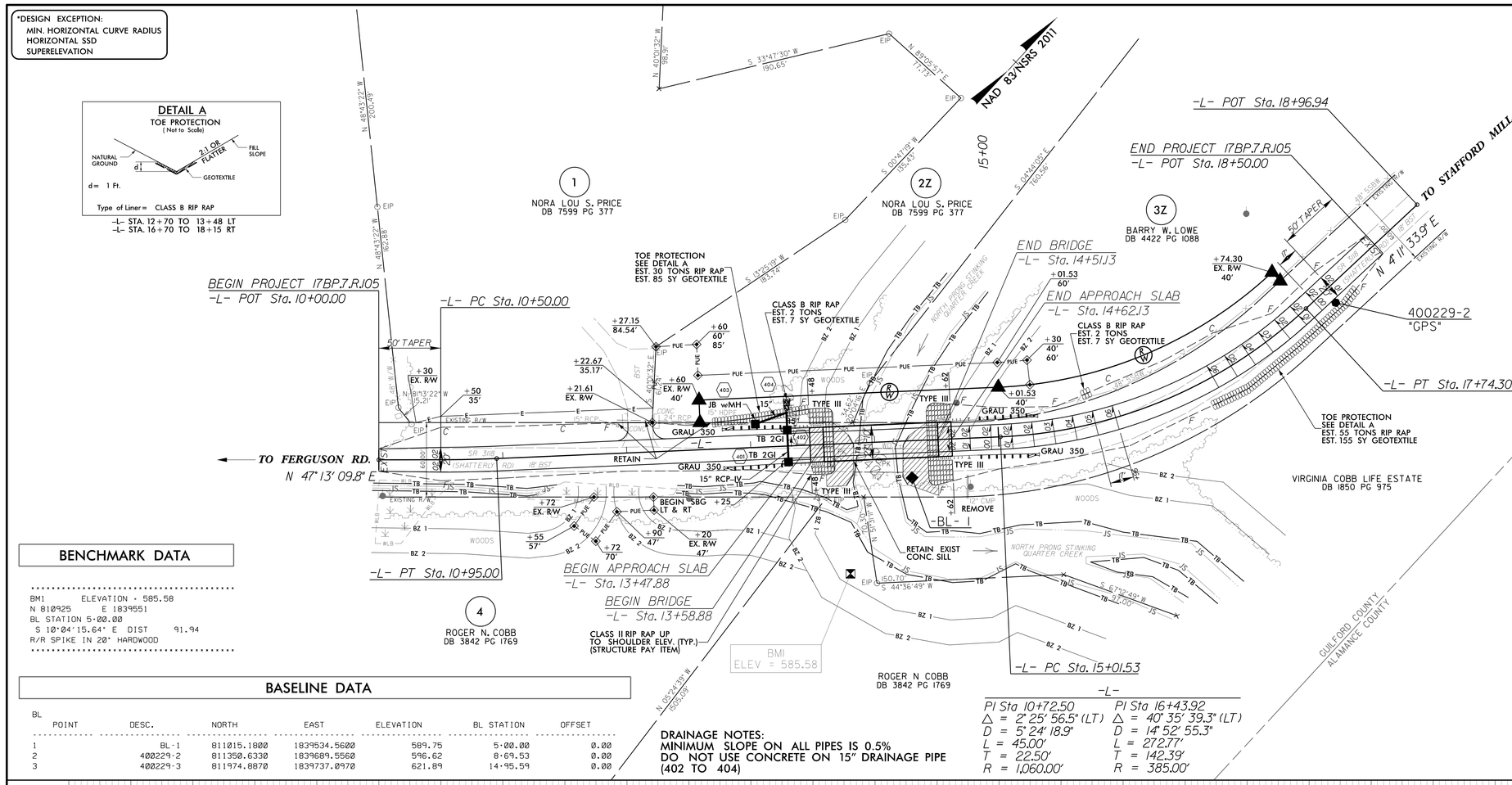


## BENCHMARK DATA

BM1 ELEVATION - 585.58
N 810925 E 1839551
BL STATION 5+00.00
S 10°24'15.64" E DIST 91.94
R/R SPIKE IN 20" HARDWOOD

## BASELINE DATA

BL

| POINT | DESC. | NORTH | EAST | ELEVATION | BL STATION | OFFSET |
|---|---|---|---|---|---|---|
| 1 | BL-1 | 811015.1800 | 1839534.5600 | 589.75 | 5+00.00 | 0.00 |
| 2 | 400229-2 | 811350.6330 | 1839689.5560 | 596.62 | 8+69.53 | 0.00 |
| 3 | 400229-3 | 811974.8870 | 1839737.0970 | 621.89 | 14+95.59 | 0.00 |

DRAINAGE NOTES:
MINIMUM SLOPE ON ALL PIPES IS 0.5%
DO NOT USE CONCRETE ON 15" DRAINAGE PIPE (402 TO 404)

-L-

| PI Sta 10+72.50 | PI Sta 16+43.92 |
|---|---|
| Δ = 2° 25' 56.5" (LT) | Δ = 40° 35' 39.3" (LT) |
| D = 5° 24' 18.9" | D = 14° 52' 55.3" |
| L = 45.00' | L = 272.77' |
| T = 22.50' | T = 142.39' |
| R = 1,060.00' | R = 385.00' |

## DATUM DESCRIPTION

THE LOCALIZED COORDINATE SYSTEM DEVELOPED FOR THIS PROJECT IS BASED ON THE STATE PLANE COORDINATES ESTABLISHED BY NCDOT FOR MONUMENT "400229-2"
WITH NAD 83/NA 2011 STATE PLANE GRID COORDINATES OF
NORTHING: 811350.633(ft) EASTING: 1839689.556(ft)
ELEVATION: 596.62(ft)
THE AVERAGE COMBINED GRID FACTOR USED ON THIS PROJECT (GROUND TO GRID) IS: 0.9999290806
THE N.C. LAMBERT GRID BEARING AND LOCALIZED HORIZONTAL GROUND DISTANCE FROM "400229-2" TO -L- STATION 10+00.00 IS
S 37° 55' 48.20" W DISTANCE: 781.72 (ft.)
ALL LINEAR DIMENSIONS ARE LOCALIZED HORIZONTAL DISTANCES
VERTICAL DATUM USED IS NAVD 88

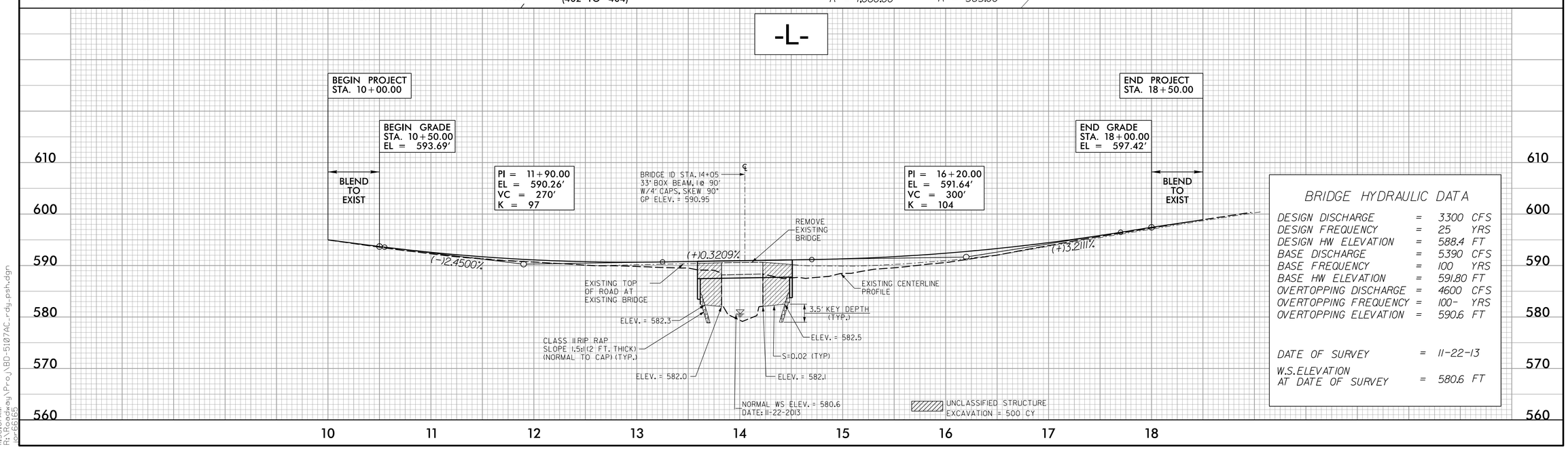


## BRIDGE HYDRAULIC DATA

| | | |
|---|---|---|
| DESIGN DISCHARGE | = | 3300 CFS |
| DESIGN FREQUENCY | = | 25 YRS |
| DESIGN HW ELEVATION | = | 588.4 FT |
| BASE DISCHARGE | = | 5390 CFS |
| BASE FREQUENCY | = | 100 YRS |
| BASE HW ELEVATION | = | 591.80 FT |
| OVERTOPPING DISCHARGE | = | 4600 CFS |
| OVERTOPPING FREQUENCY | = | 100- YRS |
| OVERTOPPING ELEVATION | = | 590.6 FT |
| DATE OF SURVEY | = | 11-22-13 |
| W.S.ELEVATION AT DATE OF SURVEY | = | 580.6 FT |

5/18/2016
11:38:01 AM
R:\Roadway\Proj\BD-5107AC_rdy_psh.dgn
jor6165

DocuSign Envelope ID: 1AEC34AC-3C63-4EEC-B407-B94D31264DEC

| PROJECT REFERENCE | SHEET NO. |
|---|---|
| 17BP.7.R.105 – GUILFORD #229 | TMP–1 |

ROADWAY DESIGN ENGINEER

NORTH CAROLINA PROFESSIONAL SEAL 21102 ENGINEER TIMOTHY JOHNSON

DocuSigned by: 5/18/2016

HATCH MOTT MACDONALD I & E, LLC
LICENSE NO. F–0669

**DOCUMENT NOT CONSIDERED FINAL UNLESS ALL SIGNATURES COMPLETED**

Prepared in the Office of: Hatch Mott MacDonald PO Box 700 Fuquay-Varina, NC 27526 www.hatchmott.com

THE FOLLOWING ROADWAY STANDARDS AS APPEAR IN "ROADWAY STANDARD DRAWINGS" – HIGHWAY DESIGN BRANCH– N.C. DEPARTMENT OF TRANSPORTATION – RALEIGH, N.C., DATED JANUARY 2012 ARE APPLICABLE TO THIS PROJECT AND BY REFERENCE HEREBY ARE CONSIDERED A PART OF THESE PLANS:

| STD. | TITLE |
|---|---|
| 1101.03 | TEMPORARY ROAD CLOSURES |
| 1110.01 | STATIONARY WORK ZONE SIGNS |
| 1145.01 | BARRICADES |
| 1205.01 | PAVEMENT MARKINGS – LINE TYPES AND OFFSETS |
| 1205.02 | PAVEMENT MARKINGS – TWO–LANE AND MULTI–LANE ROADWAYS |
| 1205.12 | PAVEMENT MARKINGS – BRIDGES |
| 1261.01 | GUARDRAIL AND BARRIER DELINEATORS – INSTALLATION SPACING |
| 1261.02 | GUARDRAIL AND BARRIER DELINEATORS – TYPES AND MOUNTING |
| 1262.01 | GUARDRAIL END DELINEATION |

# GENERAL NOTES

CHANGES MAY BE REQUIRED WHEN PHYSICAL DIMENSIONS IN THE DETAIL DRAWINGS, STANDARD DETAILS, AND ROADWAY DETAILS ARE NOT ATTAINABLE TO MEET FIELD CONDITIONS OR RESULT IN DUPLICATE OR UNDESIRED OVERLAPPING OF DEVICES. MODIFICATION MAY INCLUDE: MOVING, SUPPLEMENTING, COVERING, OR REMOVAL OF DEVICES AS DIRECTED BY THE ENGINEER.

THE FOLLOWING GENERAL NOTES APPLY AT ALL TIMES FOR THE DURATION OF THE CONSTRUCTION PROJECT EXCEPT WHEN OTHERWISE NOTED IN THE PLAN OR DIRECTED BY THE ENGINEER.

TRAFFIC PATTERN ALTERATIONS

A) NOTIFY THE ENGINEER TWENTY ONE (21) CALENDAR DAYS PRIOR TO ANY TRAFFIC PATTERN ALTERATION.

SIGNING

B) PROVIDE PERMANENT SIGNING.

C) PROVIDE SIGNING AND DEVICES REQUIRED TO CLOSE THE ROAD ACCORDING TO THE ROADWAY STANDARD DRAWINGS AND TRAFFIC CONTROL PLANS.

PROVIDE SIGNING REQUIRED FOR THE OFF–SITE DETOUR ROUTE AS SHOWN IN THE TRAFFIC CONTROL PLANS.

D) COVER OR REMOVE ALL SIGNS AND DEVICES REQUIRED TO CLOSE THE ROAD WHEN ROAD CLOSURE IS NOT IN OPERATION.

COVER OR REMOVE ALL SIGNS REQUIRED FOR THE OFF–SITE DETOUR WHEN THE DETOUR IS NOT IN OPERATION.

E) ENSURE ALL NECESSARY SIGNING IS IN PLACE PRIOR TO ALTERING ANY TRAFFIC PATTERN.

TRAFFIC CONTROL DEVICES

F) PLACE TYPE III BARRICADES, WITH "ROAD CLOSED" SIGN R11–2 ATTACHED, OF SUFFICIENT LENGTH TO CLOSE ENTIRE ROADWAY.

PAVEMENT MARKINGS AND MARKERS

G) INSTALL PAVEMENT MARKINGS ON THE FINAL SURFACE.

# PHASING

STEP 1: USING ROADWAY STANDARD DRAWING NUMBER 1101.03, SHEET 1 OF 9, AND SHEET TMP–2, PERFORM THE FOLLOWING:
– INSTALL ALL ROAD CLOSURE AND DETOUR SIGNING INCLUDING BARRICADES
– CLOSE SR 3118 (SHATTERLY RD)
– PLACE TRAFFIC ONTO OFF– SITE DETOUR

STEP 2: REMOVE EXISTING BRIDGE #229 AND CONSTRUCT THE PROPOSED BRIDGE AND APPROACHES AS SHOWN IN THE CONSTRUCTION PLANS.

STEP 3: INSTALL FINAL PAVEMENT MARKINGS.

STEP 4: REMOVE ALL TRAFFIC CONTROL SIGNING AND DEVICES AND RE–OPEN SR 3118 (SHATTERLY RD) TO THE FINAL TRAFFIC PATTERN.

# PAVEMENT MARKING

| | |
|---|---|
| PAINT WHITE EDGELINE (4") | 3,400 LF |
| PAINT YELLOW DOUBLE CENTER (4") | 3,400 LF |

NOTE: QUANTITY INCLUDES 2 APPLICATIONS OF EACH

jor66165
R:\Roadway\Proj\BD-5107AC_rdy_tmp.dgn
5/18/2016 11:38:04 AM

DocuSign Envelope ID: 1AEC34AC-3C63-4EEC-B407-B94D31264DEC

| PROJECT REFERENCE | SHEET NO. |
|---|---|
| 17BP.7.R.105 – GUILFORD #229 | TMP–2 |

ROADWAY DESIGN ENGINEER

NORTH CAROLINA PROFESSIONAL SEAL 21102 ENGINEER JOHN TIMOTHY JOHNSON

DocuSigned by: John Timothy Johnson
5/18/2016 | 10:06 AM EDT

HATCH MOTT MACDONALD J & E, LLC
LICENSE NO. F-0669

**DOCUMENT NOT CONSIDERED FINAL UNLESS ALL SIGNATURES COMPLETED**

Prepared in the Office of: Hatch Mott MacDonald, PO Box 700, Fuquay-Varina, NC 27526, www.hatchmott.com

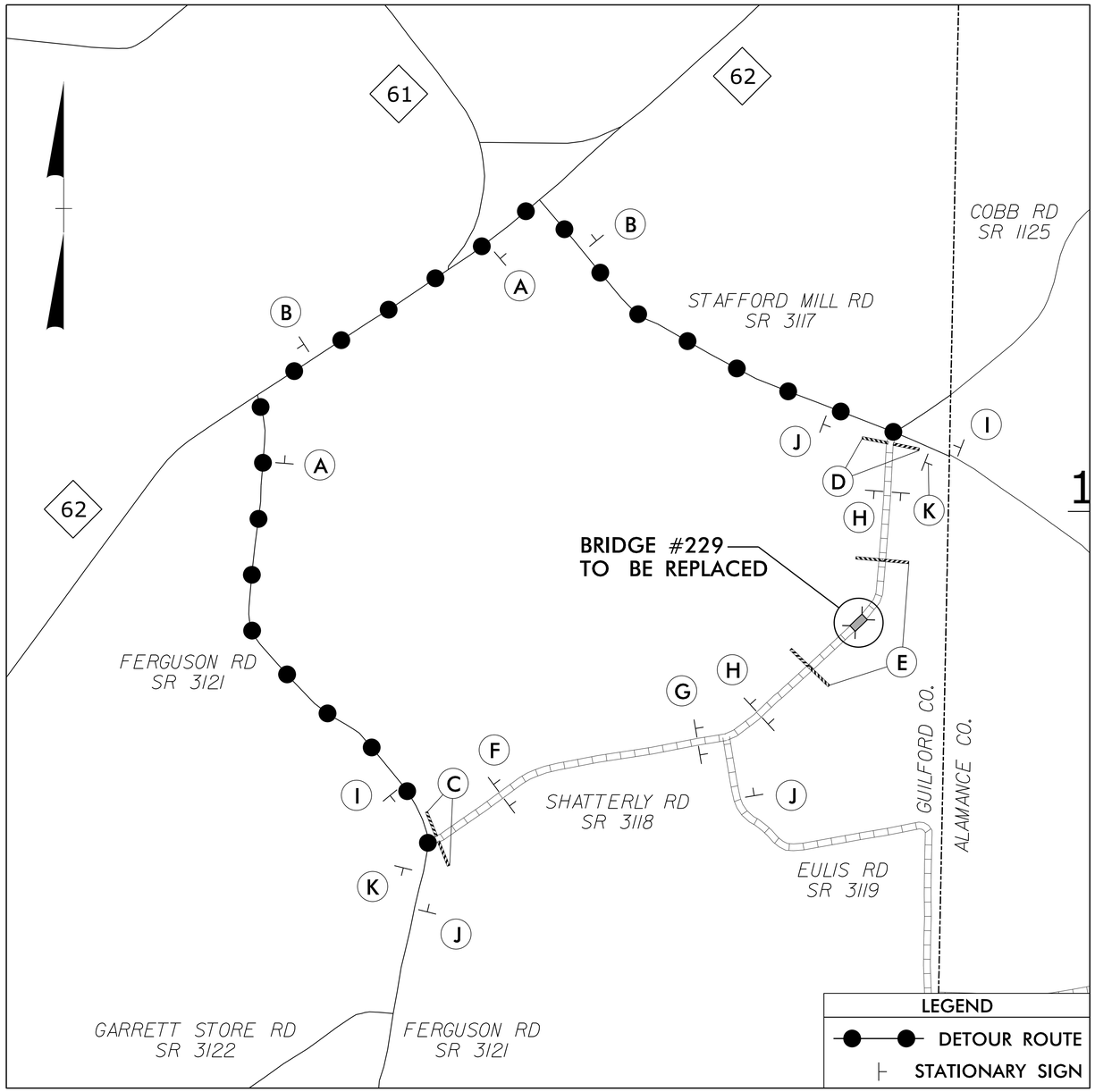


✱ SEE SHEET TMP–3 FOR SPECIAL SIGN DESIGNS

✱ SHATTERLY ROAD
DETOUR
M4–8 24″ X 12″
M6–1 R 21″ X 15″
(A)

✱ SHATTERLY ROAD
DETOUR
M4–8 24″ X 12″
M6–1 L 21″ X 15″
(B)

END DETOUR
M4–8 A 24″ X 18″
(K)

R11-4 60″ x 30″
ROAD CLOSED TO THRU TRAFFIC
DETOUR
M4-10L 48″ x 18″
TYPE III BARRICADE
(C)

R11-4 60″ x 30″
ROAD CLOSED TO THRU TRAFFIC
DETOUR
M4-10R 48″ x 18″
TYPE III BARRICADE
(D)

R11-2 48″ x 30″
ROAD CLOSED
TYPE III BARRICADE(S)
(E)

ROAD CLOSED AHEAD
W20–3 48″ X 48″
(F)

ROAD CLOSED 1000 FT
W20–3 48″ X 48″
(G)

ROAD CLOSED 500 FT
W20–3 48″ X 48″
(H)

ROAD CLOSED AHEAD
NEXT LEFT
W20–3 48″ X 48″
SP–4L 42″ X 12″
(I)

ROAD CLOSED AHEAD
NEXT RIGHT
W20–3 48″ X 48″
SP–4R 42″ X 12″
(J)

jor66165
R:\Roadway\Proj\BD-5107AC_rdy_tmp.dgn
5/18/2016 11:38:04 AM

DocuSign Envelope ID: 1AEC34AC-3C63-4EEC-B407-B94D31264DEC

| PROJECT REFERENCE | SHEET NO. |
|---|---|
| 17BP.7.R.105 – GUILFORD #229 | TMP–3 |

TRAFFIC ENGINEER

NORTH CAROLINA PROFESSIONAL SEAL 023488 ENGINEER

Nathan K. Phillips
Digitally signed by Nathan K. Phillips
DN: cn=Nathan K. Phillips, o=Hatch Mott MacDonald, ou=Engineering, email=nathan.phillips@hmmh.com, c=US
Date: 2016.05.18 11:38:14 -04'00'
5/18/2016

HATCH MOTT MACDONALD I & E, LLC
LICENSE NO. F-0669

**DOCUMENT NOT CONSIDERED FINAL UNLESS ALL SIGNATURES COMPLETED**

Prepared in the Office of: Hatch Mott MacDonald PO Box 700 Fuquay-Varina, NC 27526 www.hatchmott.com

SIGN NUMBER: SD-1
TYPE: D
QUANTITY: SEE PLANS

SIGN WIDTH: 4′-0″
HEIGHT: 2′-6″
TOTAL AREA: 10.0 Sq.Ft.

BORDER TYPE: INSET
RECESS: 0.47″
WIDTH: 0.63″
RADII: 1.5″

NO. Z BARS:
LENGTH:

BACKG COLOR: Fluorescent Orange
COPY COLOR: Black

| SYMBOL | X | Y | WID | HT |
|---|---|---|---|---|
| | | | | |

MAT'L: 0.125″ (3.2 mm) ALUMINUM

DESIGN BY: BLP
PROJECT ID: 17BP.7.R.105
CHECKED BY: NKP
DIV: 7
DATE: Oct 11, 2013

USE NOTES: 1,2

1. Legend and border shall be direct applied black non-reflective sheeting.
2. Background shall be NC GRADE B fluoresent orange retroreflective sheeting.

BORDER
R=1.5″
TH=0.63″
IN=0.47″

Spacing Factor is 1 unless specified otherwise

LETTER POSITIONS

Letter locations are panel edge to lower left corner

| | | | | | | | | | | | | | | | | | | | | | | | | | | | Series/Size Text Length |
|---|---|---|---|---|---|---|---|---|---|---|---|---|---|---|---|---|---|---|---|---|---|---|---|---|---|---|---|
| | S | H | A | T | T | E | R | L | Y | | | | | | | | | | | | | | | | | | C 2000 |
| | 6.1 | 10.5 | 14.7 | 18.9 | 22.3 | 26.2 | 30.3 | 34.7 | 38.1 | | | | | | | | | | | | | | | | | | 35.8 |
| | R | O | A | D | | | | | | | | | | | | | | | | | | | | | | | C 2000 |
| | 15.7 | 20 | 24.2 | 28.9 | | | | | | | | | | | | | | | | | | | | | | | 16.6 |
| | | | | | | | | | | | | | | | | | | | | | | | | | | | |
| | | | | | | | | | | | | | | | | | | | | | | | | | | | |
| | | | | | | | | | | | | | | | | | | | | | | | | | | | |
| | | | | | | | | | | | | | | | | | | | | | | | | | | | |

FILENAME: BD-5107AC_rdy_TMP3

NORTH CAROLINA D.O.T. SIGN DETAIL

jor66165
R:\Roadway\Proj\BD-5107AC_rdy_tmp3.dgn
5/18/2016 11:38:14 AM

| STATE | STATE PROJECT REFERENCE NO. | SHEET NO. | TOTAL SHEETS |
|---|---|---|---|
| N.C. | 17BP.R.7.105 | EC-1 | |

| STATE PROJ. NO. | F.A. PROJ. NO. | DESCRIPTION |
|---|---|---|
| 45353.1.FD30 | BRZ-3118(1) | P.E. |
| 45353.2.FD30 | BRZ-3118(1) | R/W |
| 17BP.7.R.105 | | CONSTRUCTION |
| | | |
| | | |

17BP.R.7.105

# STATE OF NORTH CAROLINA
# DIVISION OF HIGHWAYS

## PLAN FOR PROPOSED
# HIGHWAY EROSION CONTROL

## *GUILFORD COUNTY*

BRIDGE NO. 229 ON SR 3118
OVER NORTH PRONG
STINKING QUARTER CREEK

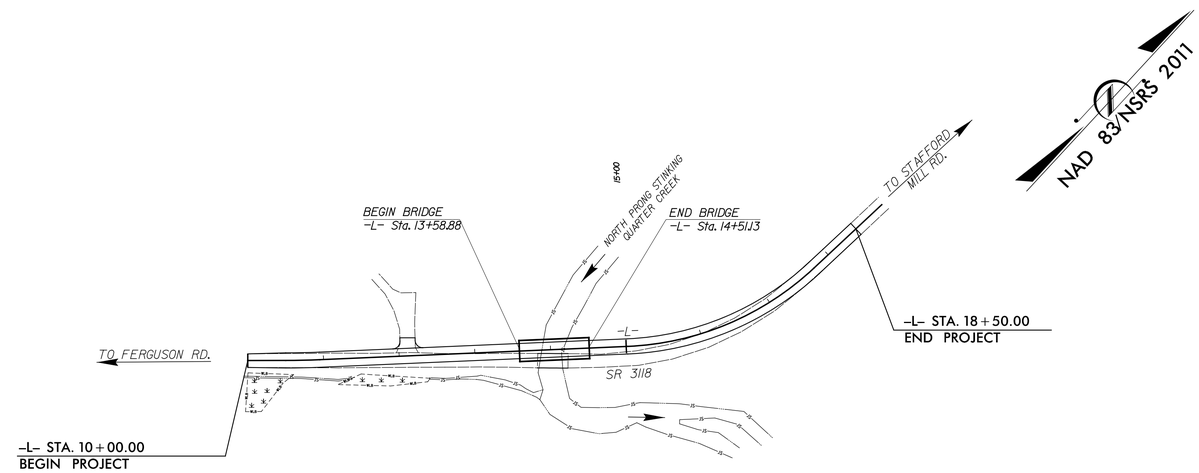


## EROSION AND SEDIMENT CONTROL MEASURES

| Std. # | Description | Symbol |
|---|---|---|
| 1630.03 | Temporary Silt Ditch | TSD |
| 1630.05 | Temporary Diversion | TD |
| 1605.01 | Temporary Silt Fence | |
| 1606.01 | Special Sediment Control Fence | |
| 1622.01 | Temporary Berms and Slope Drains | |
| 1630.02 | Silt Basin Type B | |
| 1633.01 | Temporary Rock Silt Check Type-A | |
| | Temporary Rock Silt Check Type-A with Matting and Polyacrylamide (PAM) | |
| 1633.02 | Temporary Rock Silt Check Type-B | |
| | Wattle/ Coir Fiber Wattle | |
| | Wattle/ Coir Fiber Wattle with Polyacrylamide (PAM) | |
| 1634.01 | Temporary Rock Sediment Dam Type-A | |
| 1634.02 | Temporary Rock Sediment Dam Type-B | |
| 1635.01 | Rock Pipe Inlet Sediment Trap Type-A | |
| 1635.02 | Rock Pipe Inlet Sediment Trap Type-B | |
| 1630.04 | Stilling Basin | |
| 1630.06 | Special Stilling Basin | |
| | Rock Inlet Sediment Trap: | |
| 1632.01 | Type A | A |
| 1632.02 | Type B | B |
| 1632.03 | Type C | C |
| | Skimmer Basin | |
| | Tiered Skimmer Basin | |
| | Infiltration Basin | |

**THIS PROJECT CONTAINS EROSION CONTROL PLANS FOR CLEARING AND GRUBBING PHASE OF CONSTRUCTION.**

**ENVIRONMENTALLY SENSITIVE AREA(S) EXIST ON THIS PROJECT**

***Refer To E. C. Special Provisions for Special Considerations.***

**THIS PROJECT HAS BEEN DESIGNED TO SENSITIVE WATERSHED STANDARDS.**


ICA Engineering
5121 Kingdom Way, Suite 100
Raleigh, NC 27607
NC License No: F-0258


***GRAPHIC SCALE***

25 0 50
PLANS

25 0 50
PROFILE (HORIZONTAL)

5 0 10
PROFILE (VERTICAL)

*ROADSIDE ENVIRONMENTAL UNIT*
*DIVISION OF HIGHWAYS*
*STATE OF NORTH CAROLINA*

LEVEL III CERTIFIED BY:
ALEXANDER D SNIDER, P.E.
CERTIFICATION NUMBER: 3064
ISSUED: MAY 19, 2016

***THESE EROSION AND SEDIMENT CONTROL PLANS COMPLY WITH THE REGULATIONS SET FORTH BY THE NCG-010000 GENERAL CONSTRUCTION PERMIT EFFECTIVE AUGUST 3, 2011 ISSUED BY THE NORTH CAROLINA DEPARTMENT OF ENVIRONMENT AND NATURAL RESOURCES DIVISION OF WATER QUALITY.***

*Prepared In the Office of:*

***ICA ENGINEERING***
*5121 KINGDOM WAY, SUITE 100*
*RALEIGH NC 27607*
*NC License No: F-0258*

***2012 STANDARD SPECIFICATIONS***

Roadway Standard Drawings

The following roadway english standards as appear in "Roadway Standard Drawings"– Roadway Design Unit – N. C. Department of Transportation – Raleigh, N. C., dated January 2012 and the latest revison thereto are applicable to this project and by reference hereby are considered a part of these plans.

| | | | |
|---|---|---|---|
| 1604.01 | Railroad Erosion Control Detail | 1632.01 | Rock Inlet Sediment Trap Type A |
| 1605.01 | Temporary Silt Fenee | 1632.02 | Rock Inlet Sediment Trap Type B |
| 1606.01 | Special Sediment Control Fenee | 1632.03 | Rock Inlet Sediment Trap Type C |
| 1607.01 | Gravel Construction Entranee | 1633.01 | Temporary Rock Silt Cheek Type A |
| 1622.01 | Temporary Berms and Slope Drains | 1633.02 | Temporary Rock Silt Cheek Type B |
| 1630.01 | Riser Basin | 1634.01 | Temporary Rock Sediment Dam Type A |
| 1630.02 | Silt Basin Type B | 1634.02 | Temporary Rock Sediment Dam Type B |
| 1630.03 | Temporary Silt Ditch | 1635.01 | Rock Pipe Inlet Sediment Trap Type A |
| 1630.04 | Stilling Basin | 1635.02 | Rock Pipe Inlet Sediment Trap Type B |
| 1630.05 | Temporary Diversion | 1640.01 | Coir Fiber Baffle |
| 1630.06 | Special Stilling Basin | 1645.01 | Temporary Stream Crossing |
| 163L01 | Matting Installation | | |

5/19/2016
ICA ENGINEERING, INC.
ICA_Erosion_Control_Erosion_title.dgn

| PROJECT REFERENCE NO. | SHEET NO. |
|---|---|
| 17BP.R.7.105 | EC-2 |

# WATTLE WITH POLYACRYLAMIDE (PAM) DETAIL

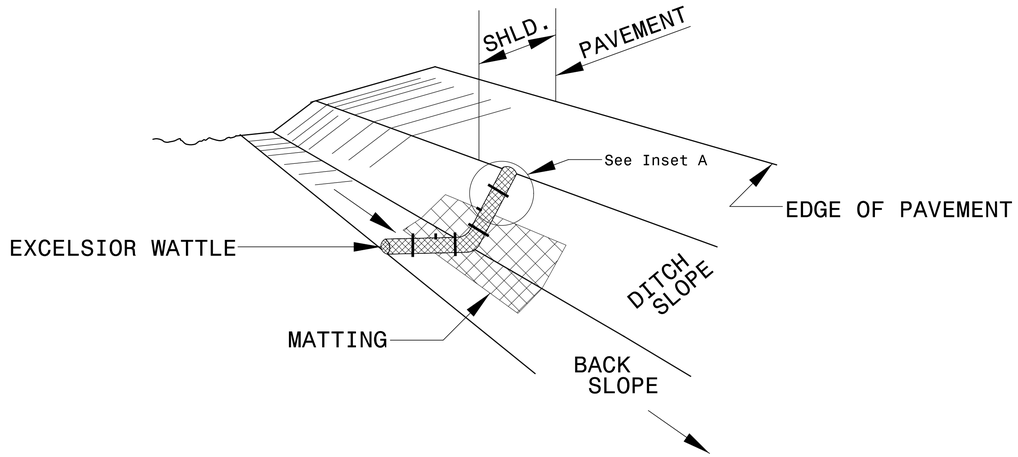


**ISOMETRIC VIEW**

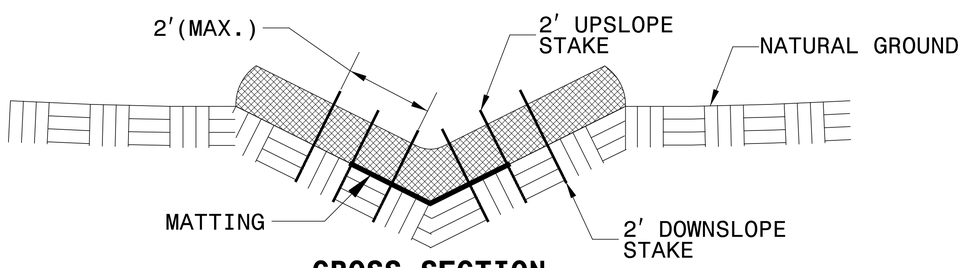


**CROSS SECTION VEE DITCH**

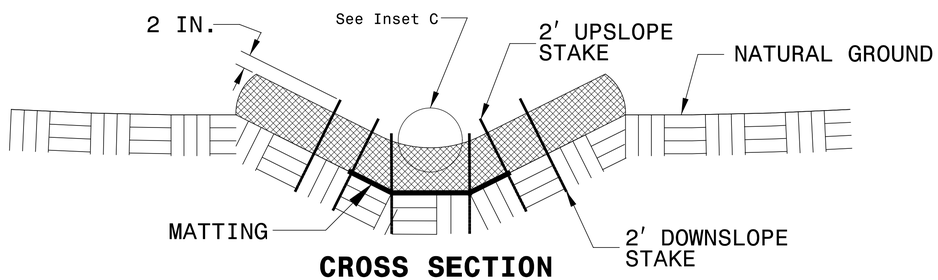


**CROSS SECTION TRAPEZOIDAL DITCH**

NOTES:

USE MINIMUM 12 IN. DIAMETER EXCELSIOR WATTLE.

USE 2 FT. WOODEN STAKES WITH A 2 IN. BY 2 IN. NOMINAL CROSS SECTION.

ONLY INSTALL WATTLE(S) TO A HEIGHT IN DITCH SO FLOW WILL NOT WASH AROUND WATTLE AND SCOUR DITCH SLOPES AND AS DIRECTED.

INSTALL A MINIMUM OF 2 UPSLOPE STAKES AND 4 DOWNSLOPE STAKES AT AN ANGLE TO WEDGE WATTLE TO BOTTOM OF DITCH.

PROVIDE STAPLES MADE OF 0.125 IN. DIAMETER STEEL WIRE FORMED INTO A U SHAPE NOT LESS THAN 12″ IN LENGTH.

INSTALL STAPLES APPROXIMATELY EVERY 1 LINEAR FOOT ON BOTH SIDES OF WATTLE AND AT EACH END TO SECURE IT TO THE SOIL.

INSTALL MATTING IN ACCORDANCE WITH SECTION 1631 OF THE STANDARD SPECIFICATIONS.

PRIOR TO POLYACRYLAMIDE (PAM) APPLICATION, OBTAIN A SOIL SAMPLE FROM PROJECT LOCATION, AND FROM OFFSITE MATERIAL, AND ANALYZE FOR APPROPRIATE PAM FLOCCULANT TO BE APPLIED TO EACH WATTLE.

INITIALLY APPLY 2 OUNCES OF ANIONIC OR NEUTRALLY CHARGED PAM OVER WATTLE WHERE WATER WILL FLOW AND 1 OUNCE OF PAM ON MATTING ON EACH SIDE OF WATTLE. REAPPLY PAM AFTER EVERY RAINFALL EVENT THAT IS EQUAL TO OR EXCEEDS 0.50 IN.

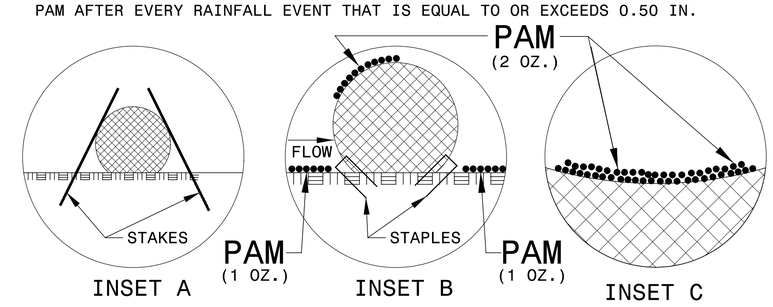


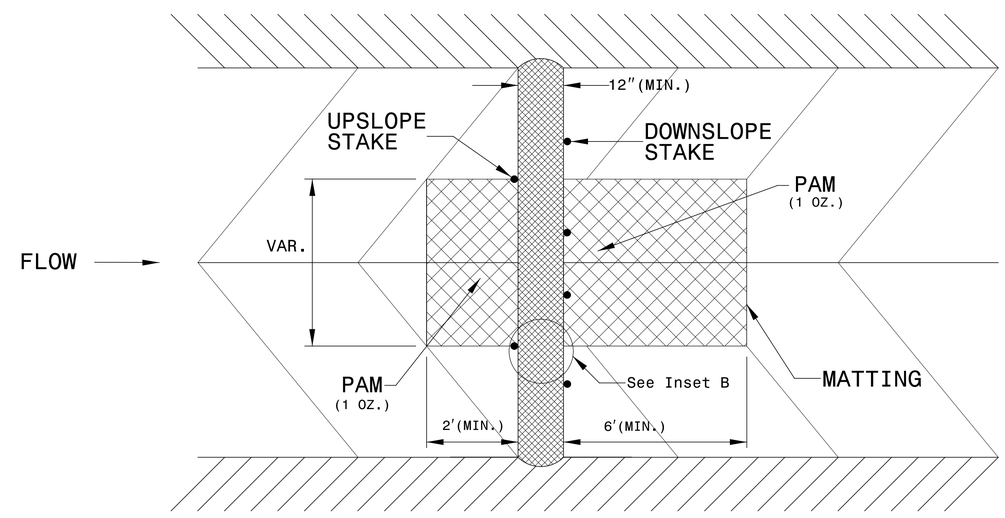


**TOP VIEW**

| PROJECT REFERENCE NO. | SHEET NO. |
|---|---|
| 17BP.R.7.J05 | EC-2A |

# TEMPORARY ROCK SILT CHECK TYPE 'A' WITH EXCELSIOR MATTING AND POLYACRYLAMIDE (PAM)

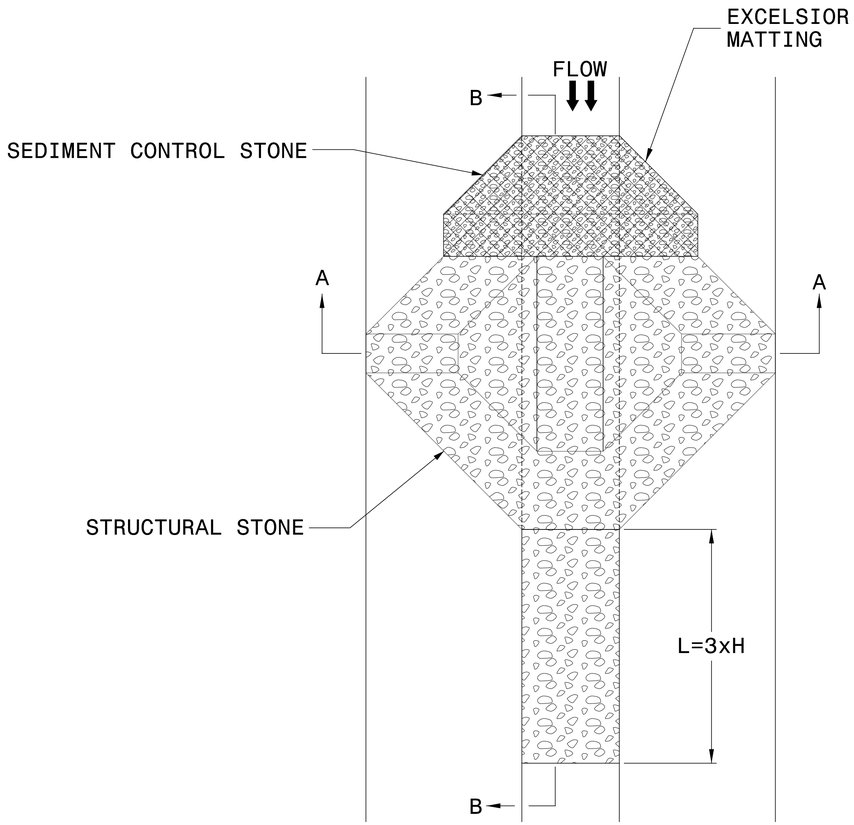


PLAN

NOTES

USE EXCELSIOR FOR MATTING MATERIAL AND ANCHOR MATTING SECTION AT TOP AND BOTTOM WITH CLASS B STONE.

PRIOR TO POLYACRYLAMIDE (PAM) APPLICATION, OBTAIN A SOIL SAMPLE FROM PROJECT LOCATION, AND FROM OFFSITE MATERIAL, AND ANALYZE FOR APPROPRIATE PAM FLOCCULANT TO BE APPLIED TO EACH ROCK SILT CHECK.

INITIALLY APPLY 3.5 OUNCES OF POLYACRYLAMIDE (PAM) TO TOP OF MATTING SECTION AND AFTER EVERY RAINFALL EVENT THAT EQUALS OR EXCEEDS 0.50 INCHES.

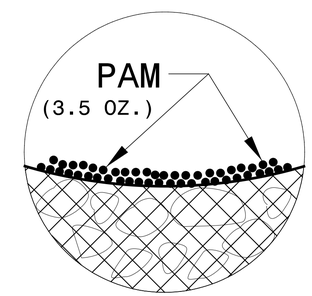


INSET A

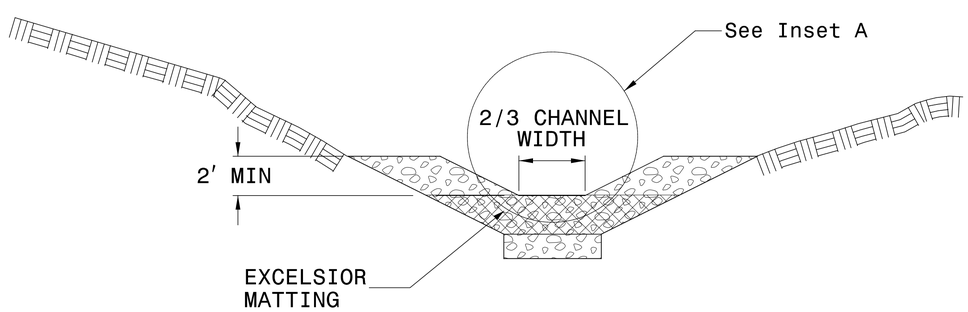


SECTION A-A

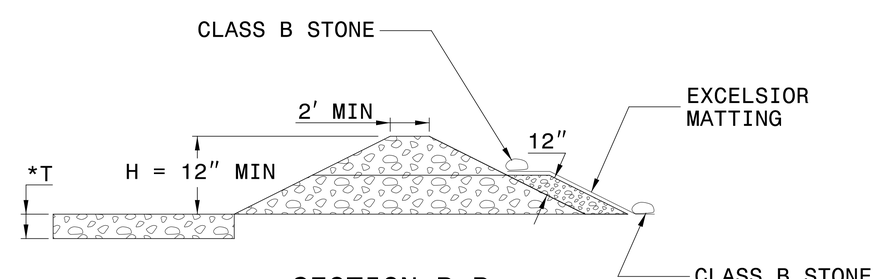


SECTION B-B

*T = 12" MIN., 18" MAX.

NOT TO SCALE

| PROJECT REFERENCE NO. | SHEET NO. |
|---|---|
| 17BP.R.7.105 | EC-3 |

ROADSIDE ENVIRONMENTAL PROJECT ENGINEER

LEVEL III CERTIFIED BY:
ALEXANDER D SNIDER, P.E.
CERTIFICATION NUMBER: 3064
ISSUED: MAY 18, 2016

DIVISION OF HIGHWAYS
STATE OF NORTH CAROLINA

# SOIL STABILIZATION SUMMARY SHEET

## MATTING FOR EROSION CONTROL

| CONST SHEET NO. | LINE | FROM STATION | TO STATION | SIDE | ESTIMATE (SY) |
|---|---|---|---|---|---|
| 4 | -L- | 10+50 | 11+50 | LT | 70 |
| 4 | -L- | 16+00 | 17+00 | LT | 70 |
| | | | | | |
| | | | | SUBTOTAL | 140 |
| MISCELLANEOUS MATTING TO BE INSTALLED AS DIRECTED BY THE ENGINEER | | | | | 6265 |
| | | | | TOTAL | 6405 |
| | | | | SAY | 6405 |

## PERMANENT SOIL REINFORCEMENT MAT

| CONST SHEET NO. | LINE | FROM STATION | TO STATION | SIDE | ESTIMATE (SY) |
|---|---|---|---|---|---|
| | | | | | |
| | | | | | |
| | | | | | |
| | | | | SUBTOTAL | |
| | | ADDITIONAL PSRM TO BE INSTALLED | | | |
| | | | | TOTAL | |
| | | | | SAY | |

| PROJECT REFERENCE NO. | SHEET NO. |
|---|---|
| 17BP.R.7.105 | EC-3A |

DIVISION OF HIGHWAYS
STATE OF NORTH CAROLINA

# SOIL STABILIZATION TIMEFRAMES

| SITE DESCRIPTION | STABILIZATION TIME | TIMEFRAME EXCEPTIONS |
|---|---|---|
| PERIMETER DIKES, SWALES, DITCHES AND SLOPES | 7 DAYS | NONE |
| HIGH QUALITY WATER (HQW) ZONES | 7 DAYS | NONE |
| SLOPES STEEPER THAN 3:1 | 7 DAYS | IF SLOPES ARE 10' OR LESS IN LENGTH AND ARE NOT STEEPER THAN 2:1, 14 DAYS ARE ALLOWED. |
| SLOPES 3:1 OR FLATTER | 14 DAYS | 7 DAYS FOR SLOPES GREATER THAN 50' IN LENGTH. |
| ALL OTHER AREAS WITH SLOPES FLATTER THAN 4:1 | 14 DAYS | NONE, EXCEPT FOR PERIMETERS AND HQW ZONES. |

5/14/99

GRAPHIC SCALE
50 0 50 100

| PROJECT REFERENCE NO. | SHEET NO. |
|---|---|
| 17BP.R.7.J05 | EC-4/CONST.4 |
| R/W SHEET NO. | |
| ROADSIDE ENVIRONMENTAL PROJECT ENGINEER | |

LEVEL III CERTIFIED BY:
ALEXANDER D SNIDER, P.E.
CERTIFICATION NUMBER: 3064
ISSUED: MAY 19, 2016

CLEARING AND GRUBBING
EROSION CONTROL FOR
CONSTRUCTION SHEET 4

NC GRID
NAD 83 NA 2011

## CLEAN WATER DIVERSION

(Not to Scale)

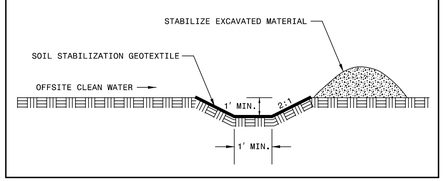


## DETAIL A

TOE PROTECTION
( Not to Scale)

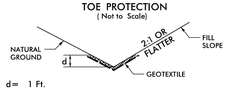


d= 1 Ft.

Type of Liner= CLASS B RIP RAP

-L- STA. 12+70 TO 13+48 LT
-L- STA. 16+70 TO 18+15 RT

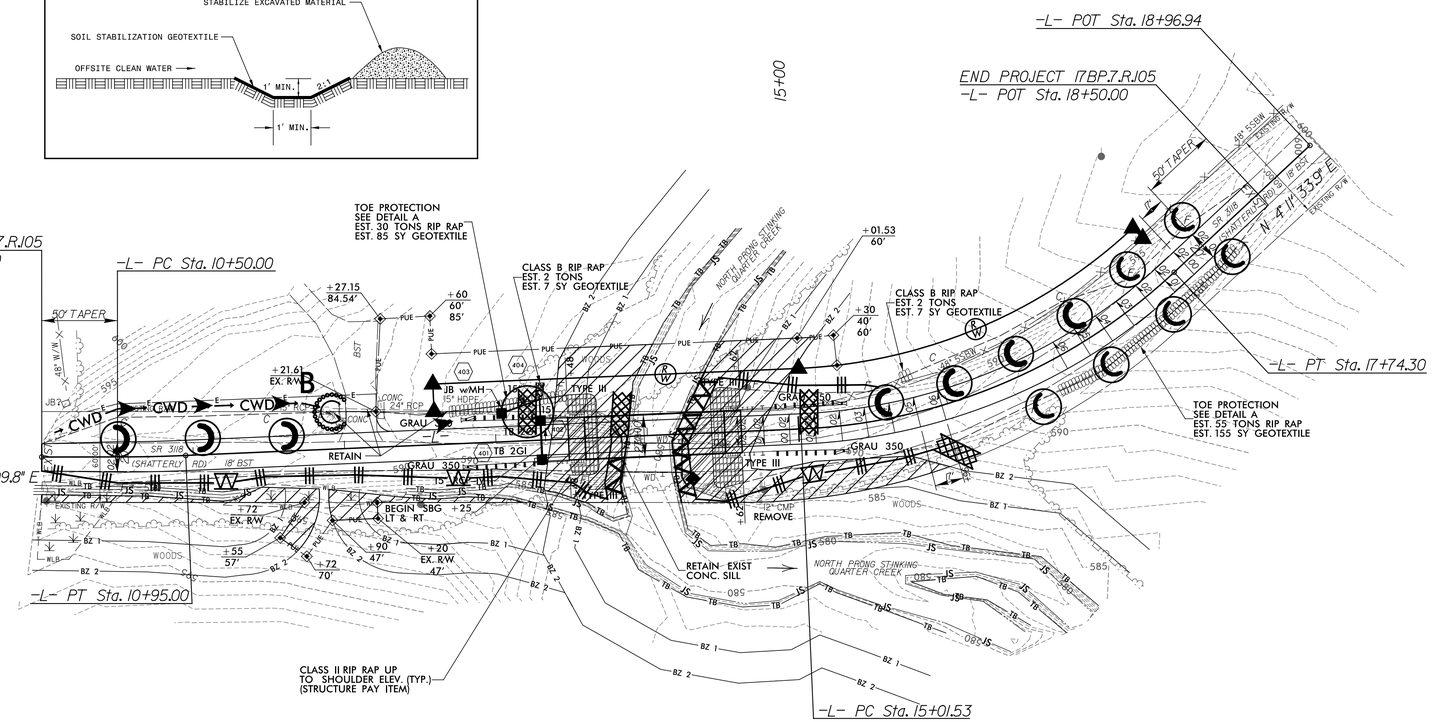


DRAINAGE NOTES:
MINIMUM SLOPE ON ALL PIPES IS 0.5%
DO NOT USE CONCRETE ON 15" DRAINAGE PIPE
(402 TO 404)

NOTE:
ALL EROSION CONTROL DEVICES SHOWN ARE LOCATED WITHIN EXISTING/PROPOSED R/W OR EASEMENT.

ENVIRONMENTALLY SENSITIVE AREA
SEE PROJECT SPECIAL PROVISIONS

ICA Engineering
5121 Kingdom Way,
Suite 100
Raleigh, NC 27607
NC License No: F-0258

5/19/2016
50-5-0016 erosion_c&g.dgn
FAA ENGINEERING, INC.

GRAPHIC SCALE
50 0 50 100

| PROJECT REFERENCE NO. | SHEET NO. |
|---|---|
| 17BP.R.7.J05 | EC-5/CONST.4 |
| R/W SHEET NO. | ___ |
| ROADSIDE ENVIRONMENTAL PROJECT ENGINEER | |

LEVEL III CERTIFIED BY:
ALEXANDER D SNIDER, P.E.
CERTIFICATION NUMBER: 3064
ISSUED: MAY 19, 2016

FINAL EROSION CONTROL FOR CONSTRUCTION SHEET 4

NC GRID NAD 83 NA 2011

## CLEAN WATER DIVERSION

(Not to Scale)




## DETAIL A

TOE PROTECTION
( Not to Scale)

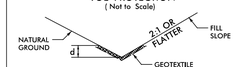


Type of Liner= CLASS B RIP RAP

-L- STA. 12+70 TO 13+48 LT
-L- STA. 16+70 TO 18+15 RT

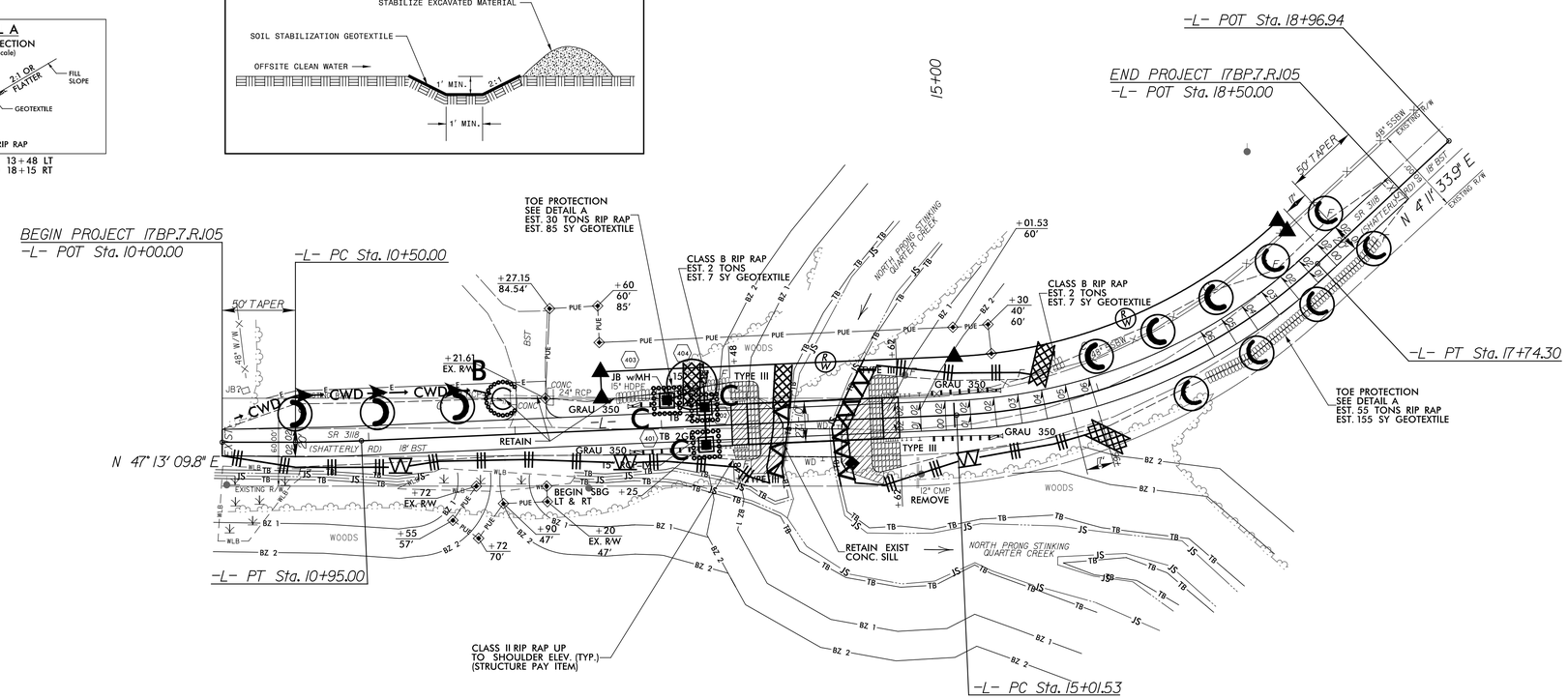


DRAINAGE NOTES:
MINIMUM SLOPE ON ALL PIPES IS 0.5%
DO NOT USE CONCRETE ON 15" DRAINAGE PIPE
(402 TO 404)

NOTE:
ALL EROSION CONTROL DEVICES SHOWN ARE LOCATED WITHIN EXISTING/PROPOSED R/W OR EASEMENT.


ICA Engineering
5121 Kingdom Way, Suite 100
Raleigh, NC 27607
NC License No: F-0258



5/19/2016
BD5/2016 ec_hyd_erosion_final.dgn
ICA ENGINEERING, INC.

| STATE | STATE PROJECT REFERENCE NO. | SHEET NO. | TOTAL SHEETS |
|---|---|---|---|
| N.C. | 17BP.R.7.105 | RF-1 | |
| STATE PROJ. NO. | F. A. PROJ. NO. | DESCRIPTION | |
| | | | |

# PLANTING DETAILS

## SEEDLING / LINER BAREROOT PLANTING DETAIL

### HEALING IN

1. Locate a healing-in site in a shady, well protected area.
2. Excavate a flat bottom trench 12 inches deep and provide drainage.

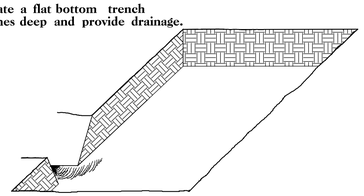

3. Backfill the trench with 2 inches well rotted sawdust. Place a 2 inch layer of well rotted sawdust at a sloping angle at one end of the trench.

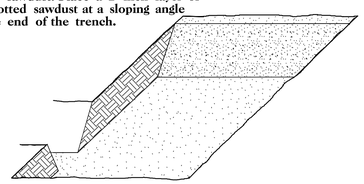

4. Place a single layer of plants against the sloping end so that the root collar is at ground level.

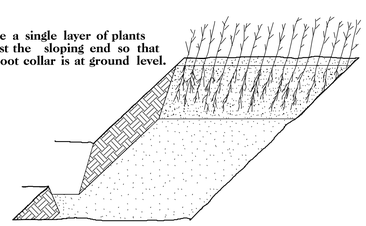

5. Place a 2 inch layer of well rotted sawdust over the roots maintaining a sloping angle.

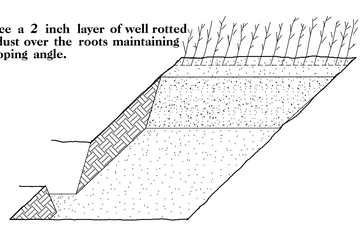

6. Repeat layers of plants and sawdust as necessary and water thoroughly.

### DIBBLE PLANTING METHOD
USING THE KBC PLANTING BAR

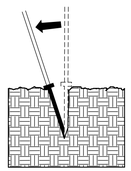

1. Insert planting bar as shown and pull handle toward planter.

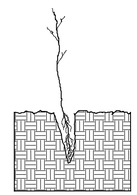

2. Remove planting bar and place seedling at correct depth.

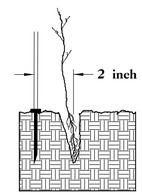


3. Insert planting bar 2 inches toward planter from seedling.

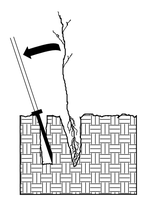

4. Pull handle of bar toward planter, firming soil at bottom.

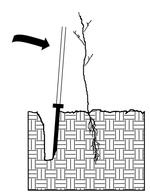

5. Push handle forward firming soil at top.

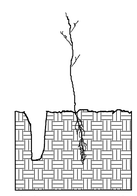

6. Leave compaction hole open. Water thoroughly.

### PLANTING NOTES:

PLANTING BAG
During planting, seedlings shall be kept in a moist canvas bag or similar container to prevent the root systems from drying.

KBC PLANTING BAR
Planting bar shall have a blade with a triangular cross section, and shall be 12 inches long, 4 inches wide and 1 inch thick at center.

ROOT PRUNING
All seedlings shall be root pruned, if necessary, so that no roots extend more than 10 inches below the root collar.

# REFORESTATION

☐ TREE REFORESTATION SHALL BE PLANTED 6 FT. TO 10 FT. ON CENTER, RANDOM SPACING, AVERAGING 8 FT. ON CENTER, APPROXIMATELY 680 PLANTS PER ACRE.

REFORESTATION

MIXTURE, TYPE, SIZE, AND FURNISH SHALL CONFORM TO THE FOLLOWING:

| | | | |
|---|---|---|---|
| 25% | LIRIODENDRON TULIPIFERA | TULIP POPLAR | 12 in – 18 in BR |
| 25% | PLATANUS OCCIDENTALIS | SYCAMORE | 12 in – 18 in BR |
| 25% | FRAXINUS PENNSYLVANICA | GREEN ASH | 12 in – 18 in BR |
| 25% | BETULA NIGRA | RIVER BIRCH | 12 in – 18 in BR |

# REFORESTATION DETAIL SHEET

N.C.D.O.T. - ROADSIDE ENVIRONMENTAL UNIT

*DESIGN EXCEPTION:
MIN. HORIZONTAL CURVE RADIUS
HORIZONTAL SSD
SUPERELEVATION

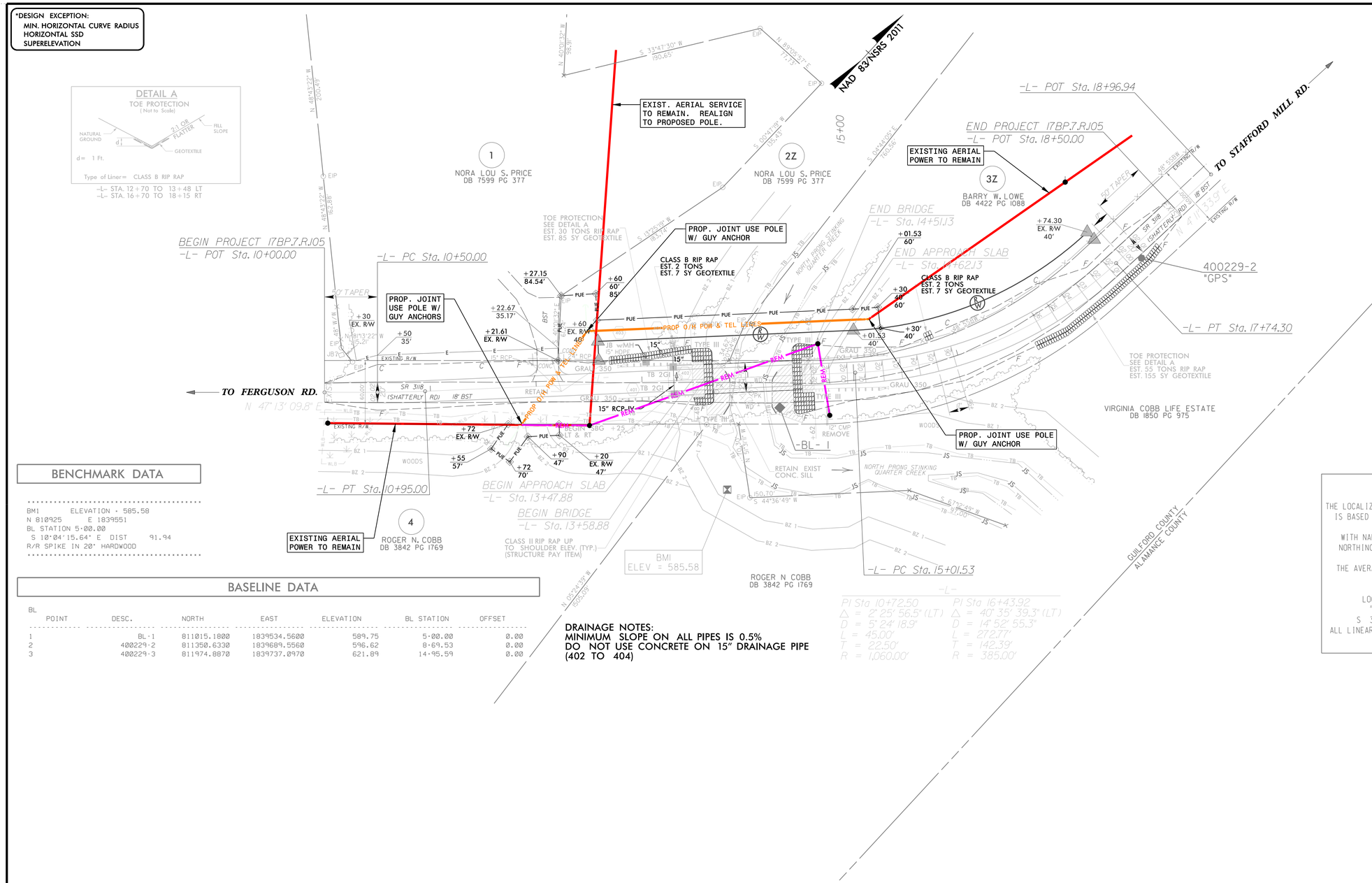


## BENCHMARK DATA

BM1 ELEVATION - 585.58
N 810925 E 1839551
BL STATION 5+00.00
S 10°04'15.64" E DIST 91.94
R/R SPIKE IN 20" HARDWOOD

## BASELINE DATA

BL

| POINT | DESC. | NORTH | EAST | ELEVATION | BL STATION | OFFSET |
|---|---|---|---|---|---|---|
| 1 | BL-1 | 811015.1800 | 1839534.5600 | 589.75 | 5+00.00 | 0.00 |
| 2 | 400229-2 | 811350.6330 | 1839689.5560 | 596.62 | 8+69.53 | 0.00 |
| 3 | 400229-3 | 811974.8870 | 1839737.0970 | 621.89 | 14+95.59 | 0.00 |

DRAINAGE NOTES:
MINIMUM SLOPE ON ALL PIPES IS 0.5%
DO NOT USE CONCRETE ON 15" DRAINAGE PIPE (402 TO 404)

| PROJECT REFERENCE | SHEET NO. |
|---|---|
| 17BP.7.R.105 – GUILFORD #229 | UO-1 |

Prepared in the Office of:
THE WOOTEN COMPANY
LICENSE NO. F-0115

THE WOOTEN COMPANY
ENGINEERING | PLANNING | ARCHITECTURE
120 North Boylan Avenue Raleigh NC 27603-1423
919.828.0531 fax 919.834.3589

GRAPHIC SCALE
25' 0 25' 50'

# UTILITIES BY OTHERS

NOTE:
ALL PROPOSED UTILITY WORK SHOWN ON THIS SHEET WILL BE DONE BY OTHERS

**DOCUMENT NOT CONSIDERED FINAL UNLESS ALL SIGNATURES COMPLETED**

## DATUM DESCRIPTION

THE LOCALIZED COORDINATE SYSTEM DEVELOPED FOR THIS PROJECT IS BASED ON THE STATE PLANE COORDINATES ESTABLISHED BY NCDOT FOR MONUMENT "400229-2"
WITH NAD 83/NA 2011 STATE PLANE GRID COORDINATES OF
NORTHING: 811350.633(ft) EASTING: 1839689.556(ft)
ELEVATION: 596.62(ft)
THE AVERAGE COMBINED GRID FACTOR USED ON THIS PROJECT (GROUND TO GRID) IS: 0.9999290806
THE N.C. LAMBERT GRID BEARING AND LOCALIZED HORIZONTAL GROUND DISTANCE FROM "400229-2" TO -L- STATION 10+00.00 IS
S 37° 55' 48.20" W DISTANCE: 781.72 (ft.)
ALL LINEAR DIMENSIONS ARE LOCALIZED HORIZONTAL DISTANCES
VERTICAL DATUM USED IS NAVD 88

| PROJ. REFERENCE NO. | SHEET NO. |
|---|---|
| 17BP.7.R.105 | X-1 |
| GUILFORD #229 | |

0 5 10

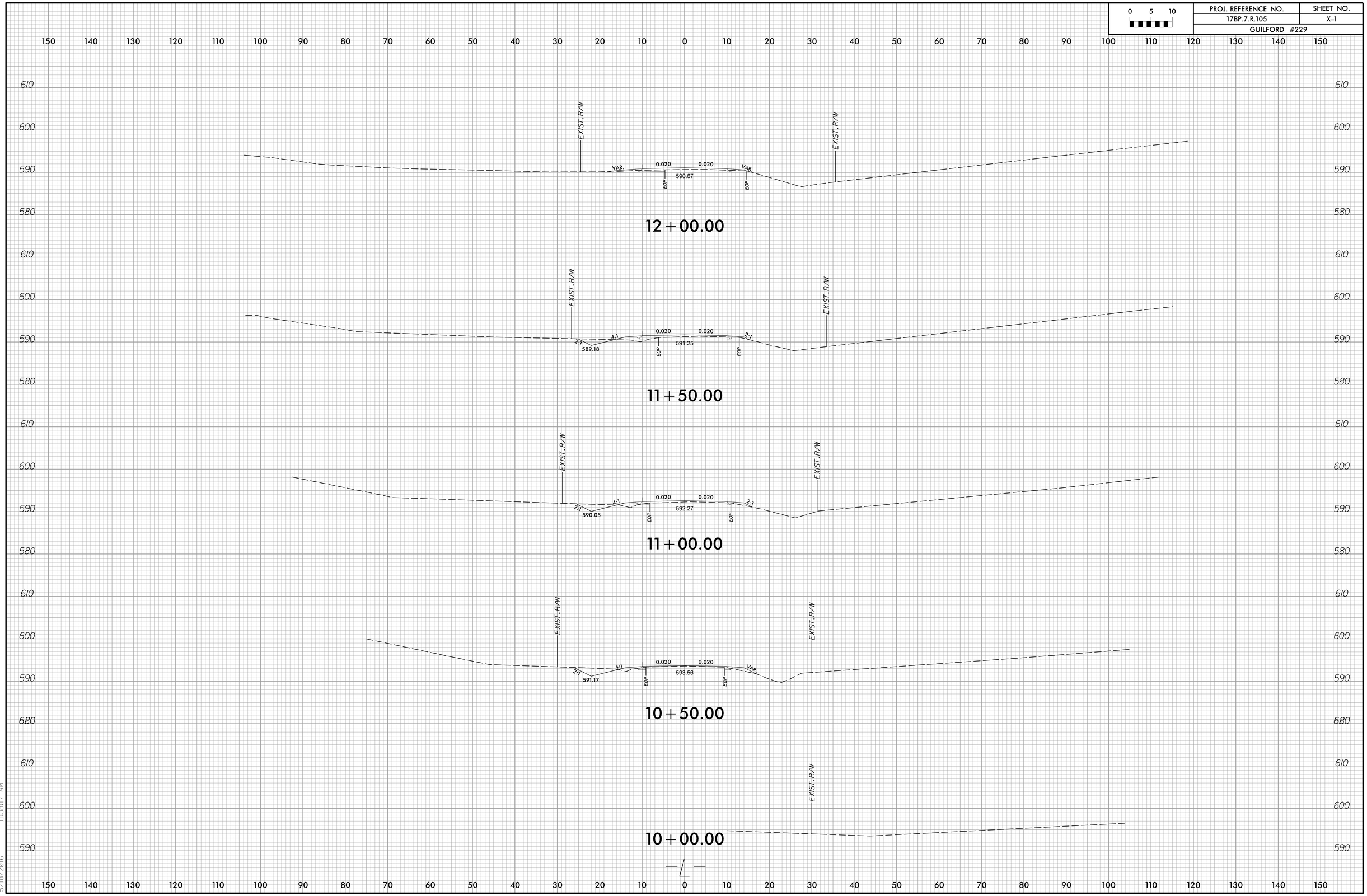


jo-66165
R:\Roadway\Xsc\Xpl\BD-5107AC_rdy_xpl.dgn
5/18/2016
11:38:17 AM

| PROJ. REFERENCE NO. | SHEET NO. |
|---|---|
| 17BP.7.R.105 | X-2 |
| GUILFORD #229 | |

0 5 10

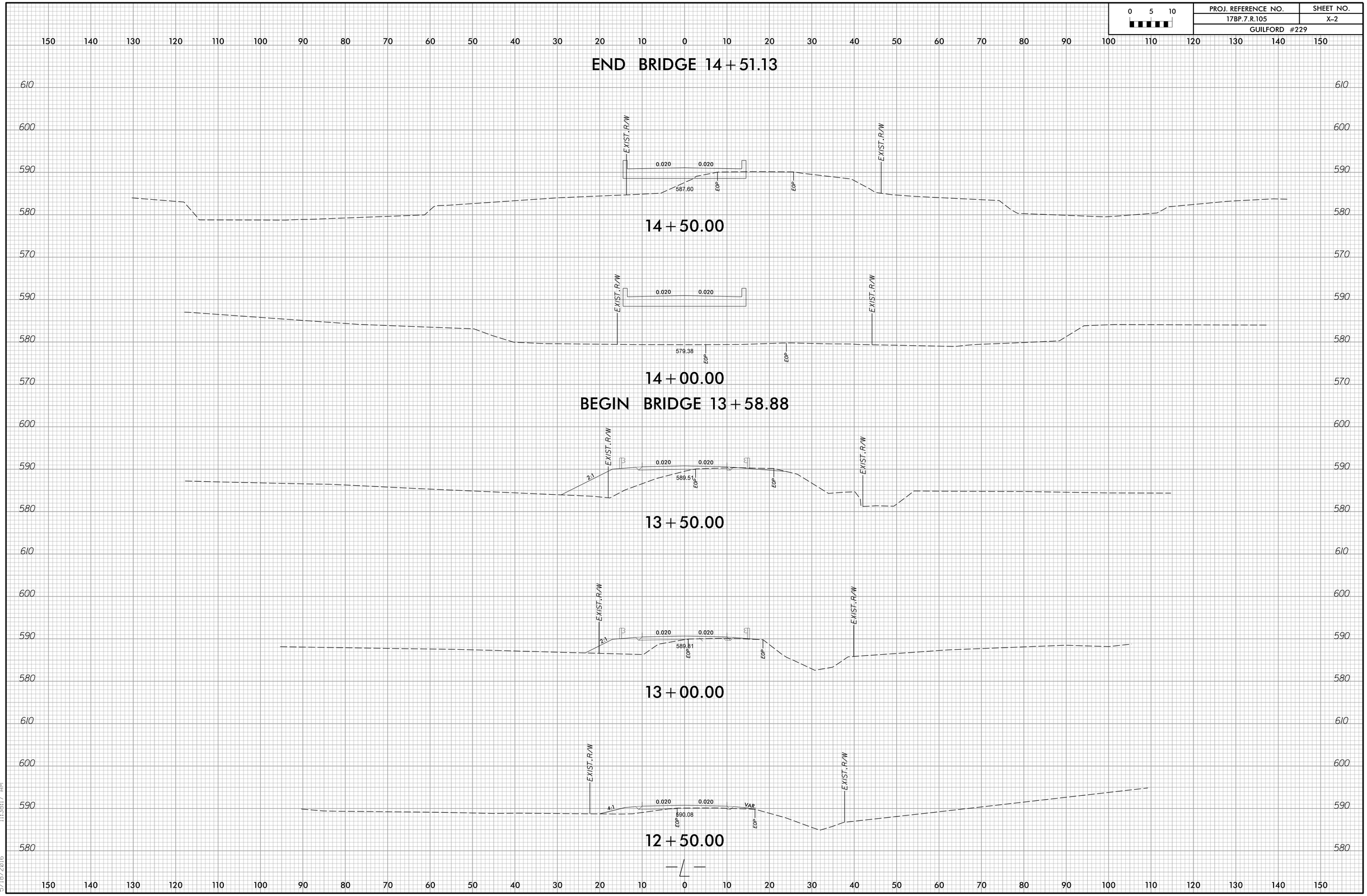


jo-66165
R:\Roadway\Xsc\Xpl\BD-5107AC_rdy_xpl.dgn
5/18/2016 11:38:17 AM

| PROJ. REFERENCE NO. | SHEET NO. |
|---|---|
| 17BP.7.R.105 | X-3 |
| GUILFORD #229 | |

0 5 10

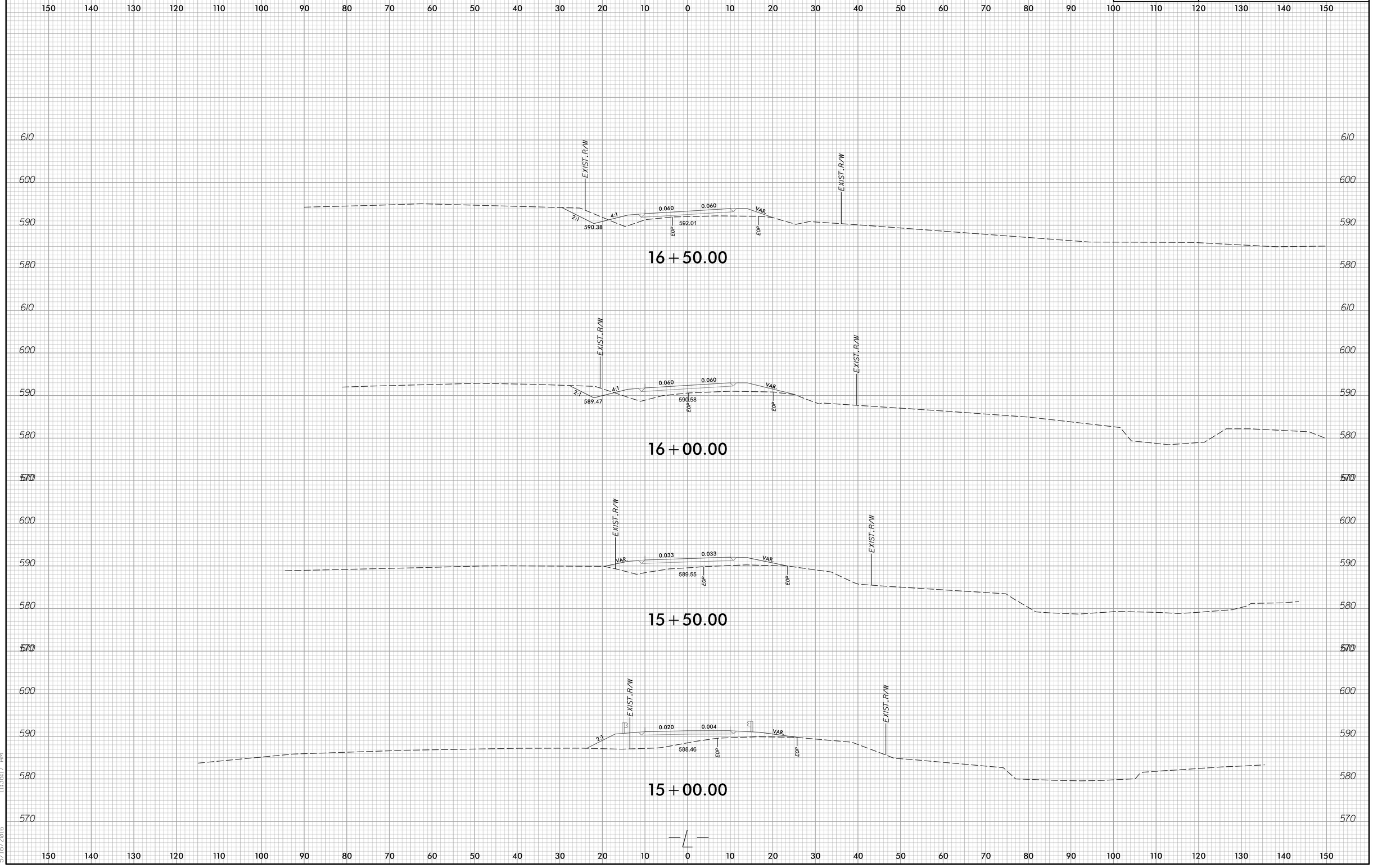


jcr66165
R:\Roadway\Xsc\Xpl\BD-5107AC_rdy_xpl.dgn
5/18/2016 11:38:17 AM

| PROJ. REFERENCE NO. | SHEET NO. |
|---|---|
| 17BP.7.R.105 | X-4 |
| GUILFORD #229 | |

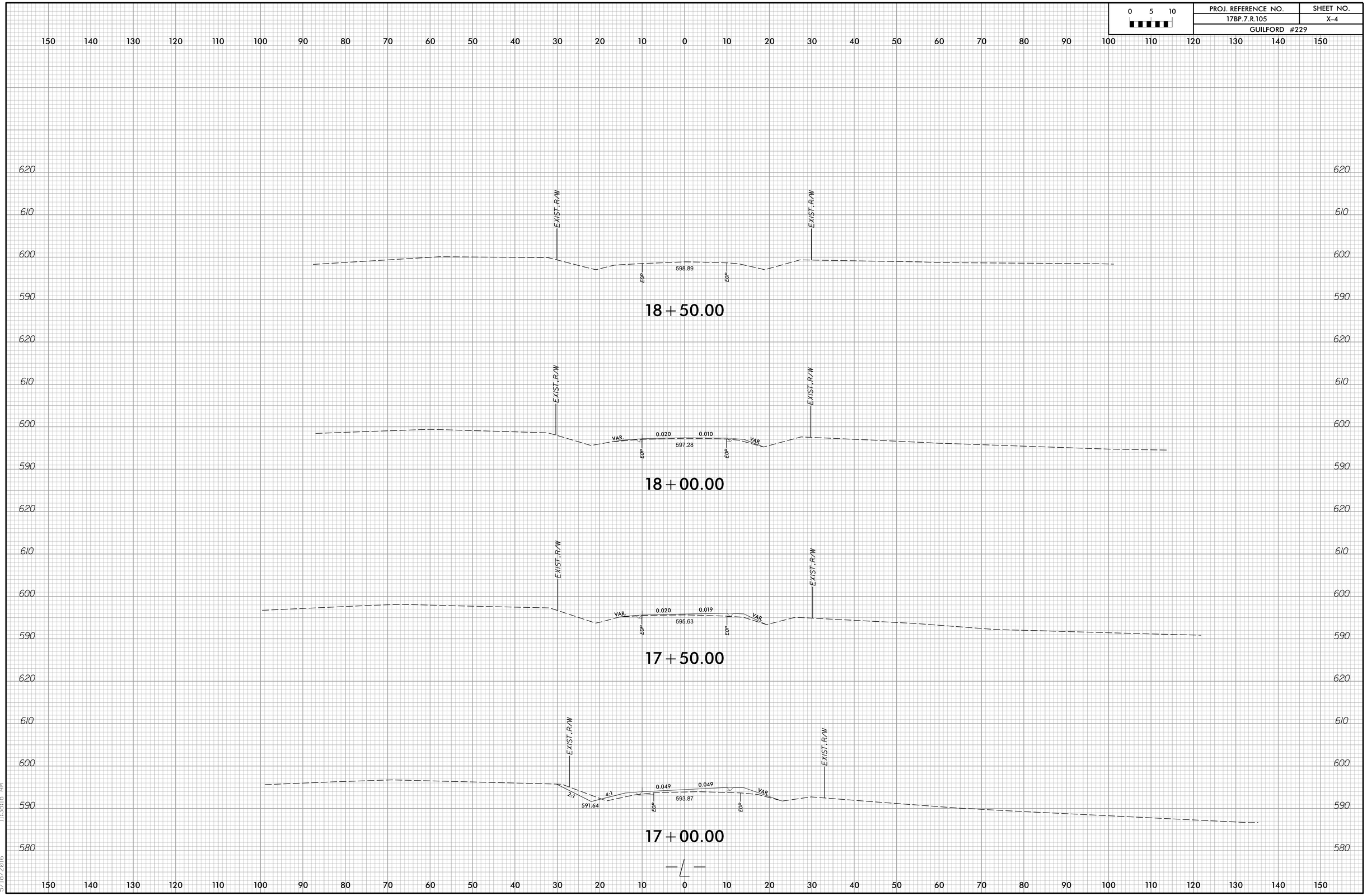


jobr66165
R:\Roadway\Xsc\Xpl\BD-5107AC_rdy_xpl.dgn
5/18/2016
11:38:18 AM

DocuSign Envelope ID: 1DC6E195-B4BB-4A7E-9ED0-E5C60B3EA188

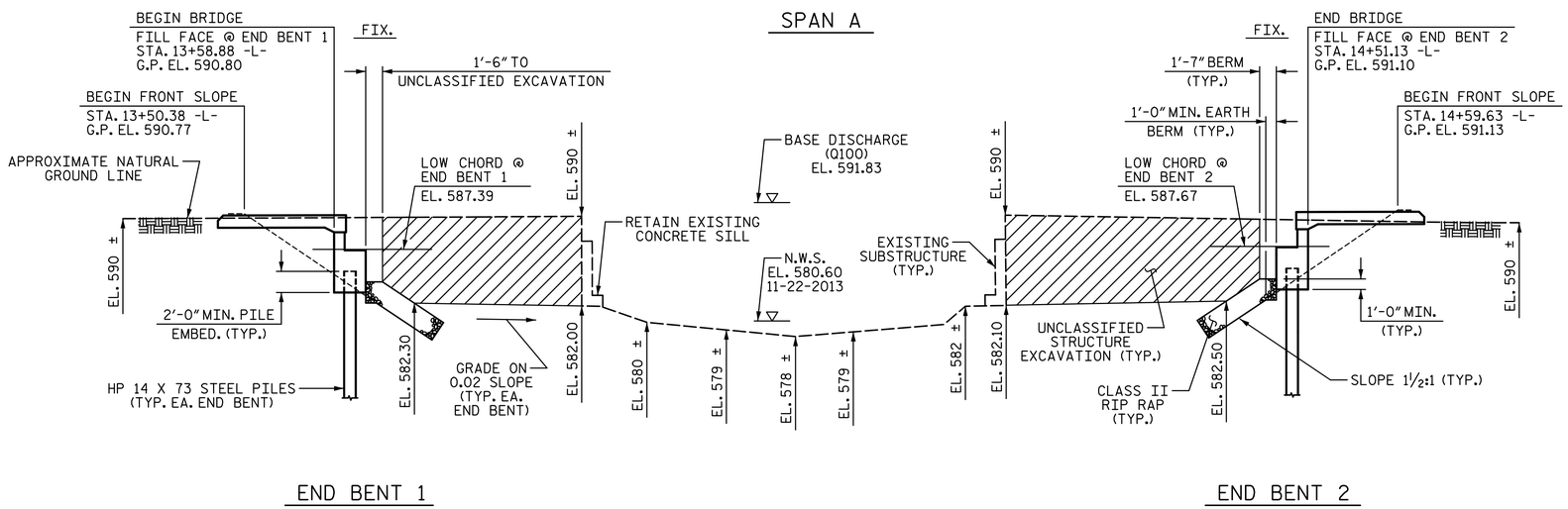


## SECTION ALONG ℄ SURVEY -L-

(-)2.4500% (+)0.3209%

PVI STA. 11+90.00
EL. = 590.26
VC = 270'

(+)0.3209% (+)3.2111%

PVI STA. 16+20.00
EL. = 591.64
VC = 300'

## GRADE DATA -L-

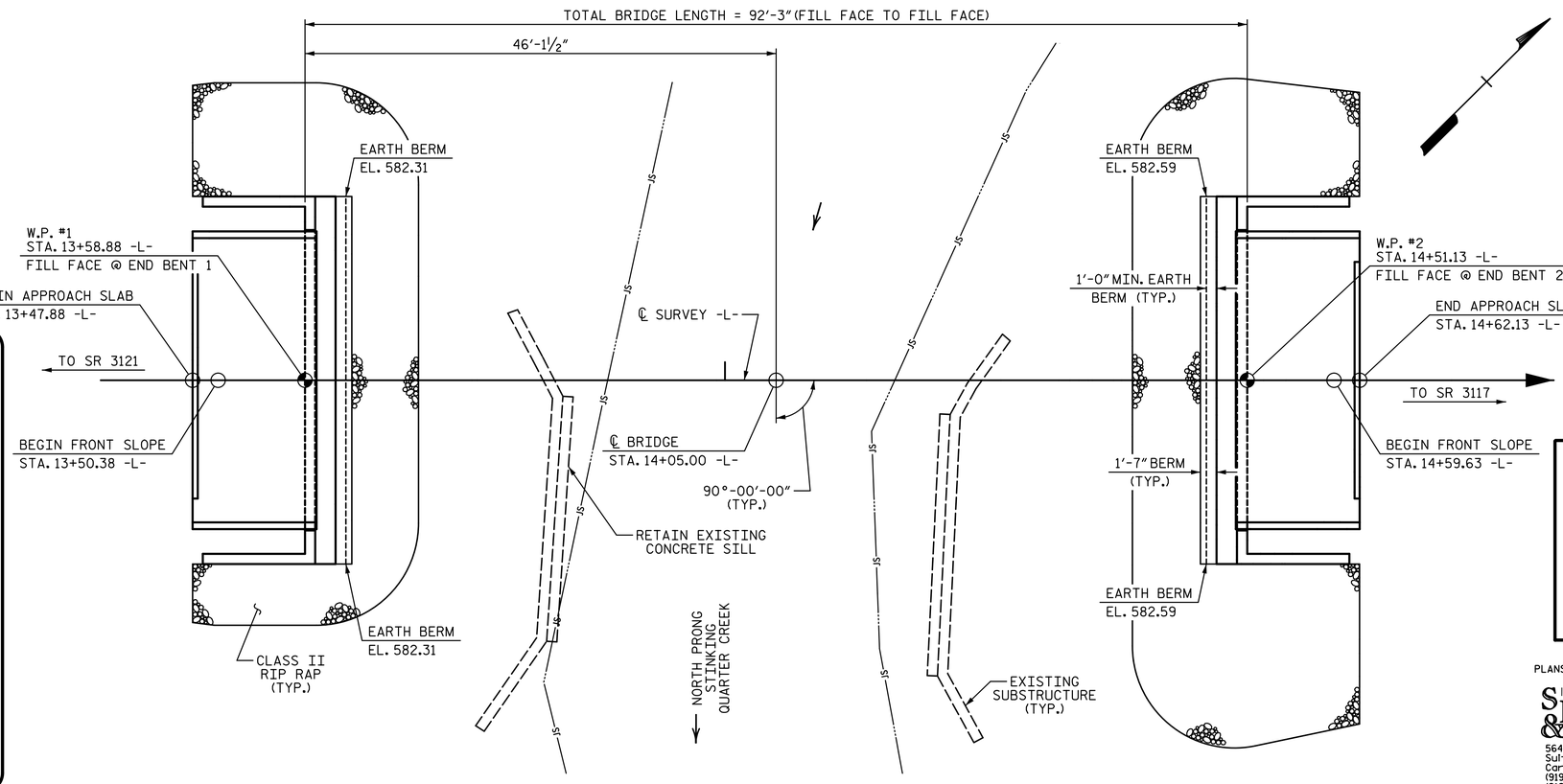


## PLAN

(PILES NOT SHOWN IN PLAN VIEW)

HYDRAULIC DATA:

| | |
|---|---|
| DESIGN DISCHARGE | = 3300 CFS |
| FREQUENCY OF DESIGN FLOOD | = 25 YEAR |
| DESIGN HIGH WATER ELEVATION | = 588.40 |
| DRAINAGE AREA | = 19.6 SQ. MI. |
| BASE DISCHARGE (Q 100) | = 5390 CFS |
| BASE HIGH WATER ELEVATION | = 591.83 |

OVERTOPPING FLOOD DATA:

| | |
|---|---|
| OVERTOPPING DISCHARGE | = 4600 CFS |
| FREQUENCY OF OVERTOPPING FLOOD | = 100- YEAR |
| OVERTOPPING FLOOD ELEVATION | = 590.60 ** |

** OVERTOPPING OCCURS AT ROADWAY SAG AT STA. 12+93.70 -L- AT ROADWAY CENTERLINE.

I HEREBY CERTIFY THESE PLANS ARE THE AS-BUILT PLANS

PROJECT NO. 17BP.7.R.105
GUILFORD COUNTY
STATION: 14+05.00 -L-

SHEET 1 OF 2 REPLACES BRIDGE #229

STATE OF NORTH CAROLINA
DEPARTMENT OF TRANSPORTATION
RALEIGH

# GENERAL DRAWING

FOR BRIDGE ON SR 3118
(SHATTERLY RD.) OVER NORTH PRONG
STINKING QUARTER CREEK
BETWEEN SR 3121 AND SR 3117

27'-10" CLEAR ROADWAY - 90° SKEW

PLANS PREPARED BY:
SIMPSON ENGINEERS & ASSOCIATES
5640 Dillard Drive
Suite 200
Cary, NC 27518
(919) 852-0468
(919) 852-0598 (Fax)
www.simpsonengr.com
LICENSURE NO. C-2521

NORTH CAROLINA PROFESSIONAL SEAL ENGINEER BETSY S. COX 14268
5/18/2016

DOCUMENT NOT CONSIDERED FINAL UNLESS ALL SIGNATURES COMPLETED

| REVISIONS | | | | | | | SHEET NO. |
|---|---|---|---|---|---|---|---|
| NO. | BY: | DATE: | NO. | BY: | DATE: | | S-1 |
| 1 | | | 3 | | | | TOTAL SHEETS |
| 2 | | | 4 | | | | 16 |

DRAWN BY: T. BANKOVICH DATE: 5-16
CHECKED BY: B.S. COX DATE: 5-16
DESIGN ENGINEER OF RECORD: B.S. COX DATE: 5-16

PROJ:17BP.7.R.105

5/18/2016 12:39:06 PM G:\Projects\2014\BD-5107AC (Guilford 229)\Structures\Drawings\Final\BD-5107AC_sd_gd.dgn

DocuSign Envelope ID: 1DC6E195-B4BB-4A7E-9ED0-E5C60B3EA188

BM #1 RAILROAD SPIKE IN 20" HARDWOOD, STA. 13+75.99 -L-, 105.08' RT., EL. 585.58

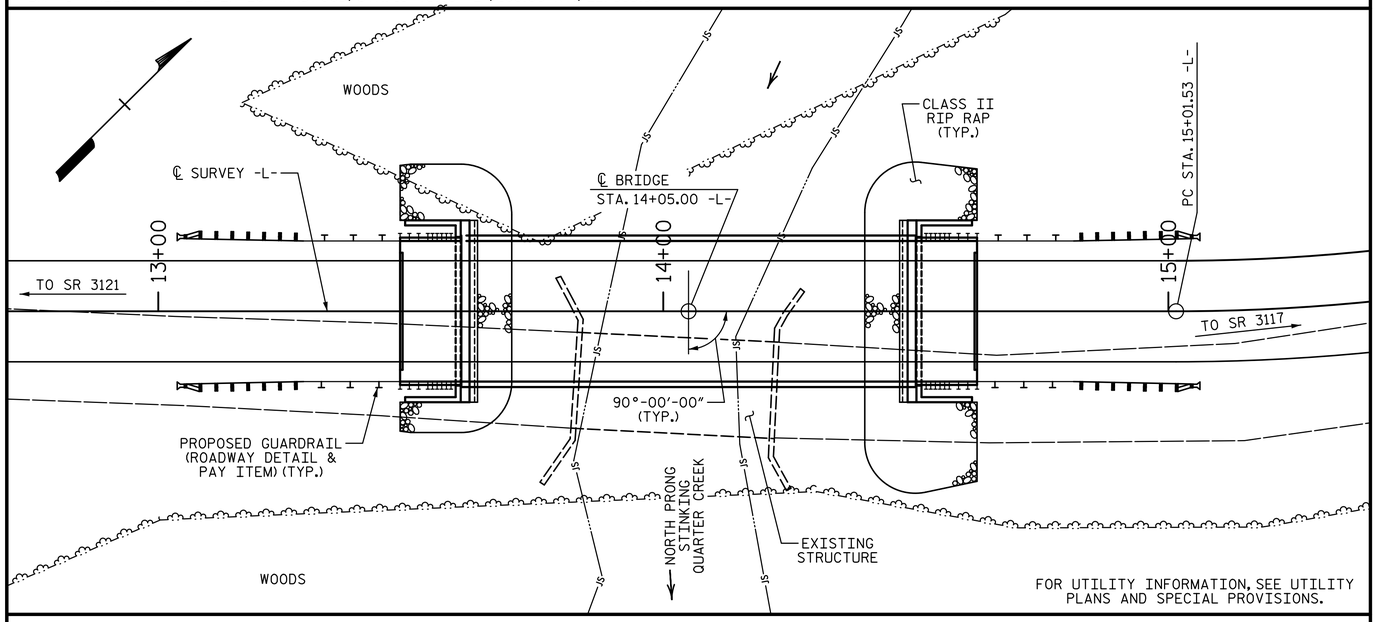


## LOCATION SKETCH

## NOTES:

ASSUMED LIVE LOAD = HL-93 OR ALTERNATE LOADING.

THIS BRIDGE HAS BEEN DESIGNED IN ACCORDANCE WITH THE AASHTO LRFD BRIDGE DESIGN SPECIFICATIONS.

THIS BRIDGE IS LOCATED IN SEISMIC ZONE 1.

FOR OTHER DESIGN DATA AND GENERAL NOTES, SEE SHEET SN.

FOR EROSION CONTROL MEASURES, SEE EROSION CONTROL PLANS.

REMOVAL OF THE EXISTING BRIDGE SHALL BE PERFORMED SO AS NOT TO ALLOW DEBRIS TO FALL INTO THE WATER. THE CONTRACTOR SHALL REMOVE THE BRIDGE AND SUBMIT PLANS FOR DEMOLITION IN ACCORDANCE WITH ARTICLE 402-2 OF THE STANDARD SPECIFICATIONS.

THE MATERIAL SHOWN IN THE CROSS-HATCHED AREA SHALL BE EXCAVATED FOR A DISTANCE OF 20 FT. LT. AND 45 FT. RT. OF CENTERLINE ROADWAY AS DIRECTED BY THE ENGINEER. THIS WORK WILL BE PAID FOR AT THE CONTRACT LUMP SUM PRICE FOR UNCLASSIFIED STRUCTURE EXCAVATION. SEE SECTION 412 OF THE STANDARD SPECIFICATIONS.

THE EXISTING STRUCTURE CONSISTS OF 1 SPAN @ 40'-8". THE SUPERSTRUCTURE HAS A CLEAR ROADWAY WIDTH OF 19.167' AND HAS A TIMBER DECK ON STEEL I BEAMS. THE END BENTS CONSIST OF TIMBER CAPS AND CONCRETE ENCASED TIMBER PILES AND TIMBER BULKHEADS. THE EXISTING STRUCTURE, WHICH IS LOCATED AT THE SITE OF THE PROPOSED STRUCTURE, SHALL BE REMOVED. THE EXISTING BRIDGE IS PRESENTLY POSTED FOR LOAD LIMIT. SHOULD THE STRUCTURAL INTEGRITY OF THE BRIDGE DETERIORATE DURING CONSTRUCTION OF THE PROPOSED BRIDGE, THE LOAD LIMIT MAY BE REDUCED AS NECESSARY DURING THE LIFE OF THE PROJECT.

THE SUBSTRUCTURE OF THE EXISTING BRIDGE INDICATED ON THE PLANS IS FROM THE BEST INFORMATION AVAILABLE. SINCE THIS INFORMATION IS SHOWN FOR THE CONVENIENCE OF THE CONTRACTOR. THE CONTRACTOR SHALL HAVE NO CLAIM WHATSOEVER AGAINST THE DEPARTMENT OF TRANSPORTATION FOR ANY DELAYS OR ADDITIONAL COST INCURRED BASED ON DIFFERENCES BETWEEN THE EXISTING BRIDGE SUBSTRUCTURE SHOWN ON THE PLANS AND THE ACTUAL CONDITIONS AT THE PROJECT SITE.

THIS STRUCTURE HAS BEEN DESIGNED IN ACCORDANCE WITH "HEC 18-EVALUATING SCOUR AT BRIDGES."

FOR SUBMITTAL OF WORKING DRAWINGS, SEE SPECIAL PROVISIONS.

FOR FALSEWORK AND FORMWORK, SEE SPECIAL PROVISIONS.

FOR CRANE SAFETY, SEE SPECIAL PROVISIONS.

FOR GROUT FOR STRUCTURES, SEE SPECIAL PROVISIONS.

ASPHALT WEARING SURFACE IS INCLUDED IN ROADWAY QUANTITY ON ROADWAY PLANS.

INASMUCH AS THE PAINT SYSTEM ON THE EXISTING STRUCTURAL STEEL CONTAINS LEAD, THE CONTRACTOR'S ATTENTION IS DIRECTED TO ARTICLE 107-1 OF THE STANDARD SPECIFICATIONS. ANY COSTS RESULTING FROM COMPLIANCE WITH APPLICABLE STATE OR FEDERAL REGULATIONS PERTAINING TO HANDLING OF MATERIALS CONTAINING LEAD BASED PAINT SHALL BE INCLUDED IN THE BID PRICE FOR "REMOVAL OF EXISTING STRUCTURE AT STATION 14+05.00 -L-."

THE CONTRACTOR SHALL PROVIDE INDEPENDENT ASSURANCE SAMPLES OF REINFORCING STEEL AS FOLLOWS: FOR PROJECTS REQUIRING UP TO 400 TONS OF REINFORCING STEEL, ONE 30 INCH SAMPLE OF EACH SIZE BAR USED, AND FOR PROJECTS REQUIRING OVER 400 TONS OF REINFORCING STEEL, TWO 30 INCH SAMPLES OF EACH SIZE BAR USED. THE BARS FROM WHICH THE SAMPLES ARE TAKEN MUST THEN BE SPLICED WITH REPLACEMENT BARS OF THE SIZE AND LENGTH OF THE SAMPLE, PLUS A MINIMUM LAP SPLICE OF THIRTY BAR DIAMETERS. PAYMENT FOR THE SAMPLES OF REINFORCING STEEL SHALL BE CONSIDERED INCIDENTAL TO VARIOUS PAY ITEMS.

FOR ASBESTOS ASSESSMENT FOR BRIDGE DEMOLITION AND RENOVATION ACTIVITIES, SEE SPECIAL PROVISIONS.

## FOUNDATION NOTES:

FOR PILES, SEE SECTION 450 OF THE STANDARD SPECIFICATIONS.

PILES AT END BENT 1 AND END BENT 2 ARE DESIGNED FOR A FACTORED RESISTANCE OF 130 TONS PER PILE.

PILE EXCAVATION IS REQUIRED TO INSTALL PILES AT END BENT 1 AND END BENT 2. EXCAVATE HOLES AT PILE LOCATIONS TO ELEVATION 573 FT. FOR PILE EXCAVATION, SEE SECTION 450 OF THE STANDARD SPECIFICATIONS.

CONCRETE IS REQUIRED TO FILL HOLES FOR PILE EXCAVATION AT END BENT 1 AND END BENT 2.

DO NOT DRIVE PILES AT END BENT 1 OR END BENT 2 AFTER PLACING PILES IN EXCAVATED HOLES.

## TOTAL BILL OF MATERIAL

| | REMOVAL OF EXISTING STRUCTURE | PILE EXCAVATION IN SOIL | PILE EXCAVATION NOT IN SOIL | UNCLASSIFIED STRUCTURE EXCAVATION | CLASS A CONCRETE | BRIDGE APPROACH SLABS | REINFORCING STEEL | HP 14 X 73 STEEL PILES | | VERTICAL CONCRETE BARRIER RAIL | RIP RAP CLASS II (2'-0" THICK) | GEOTEXTILE FOR DRAINAGE | ELASTOMERIC BEARINGS | 3'-0" X 2'-9" PRESTRESSED CONCRETE BOX BEAMS | | ASBESTOS ASSESSMENT |
|---|---|---|---|---|---|---|---|---|---|---|---|---|---|---|---|---|
| | LS | LF | LF | LS | CY | LS | LB | NO. | LF | LF | TON | SY | LS | NO. | LF | LS |
| SUPERSTRUCTURE | | | | | | LS | | | | 180.00 | | | LS | 10 | 900.00 | |
| END BENT 1 | | 30 | 20 | LS | 25.3 | | 3,376 | 5 | 60 | | 95 | 105 | | | | |
| END BENT 2 | | 30 | 20 | LS | 25.3 | | 3,376 | 5 | 60 | | 100 | 115 | | | | |
| | | | | | | | | | | | | | | | | |
| TOTAL | LS | 60 | 40 | LS | 50.6 | LS | 6,752 | 10 | 120 | 180.00 | 195 | 220 | LS | 10 | 900.00 | LS |

PROJECT NO. 17BP.7.R.105
GUILFORD COUNTY
STATION: 14+05.00 -L-

SHEET 2 OF 2

STATE OF NORTH CAROLINA
DEPARTMENT OF TRANSPORTATION
RALEIGH

GENERAL DRAWING
FOR BRIDGE ON SR 3118
(SHATTERLY RD.) OVER NORTH PRONG
STINKING QUARTER CREEK
BETWEEN SR 3121 AND SR 3117

27'-10" CLEAR ROADWAY - 90° SKEW

PLANS PREPARED BY:

SIMPSON ENGINEERS & ASSOCIATES
5640 Dillard Drive
Suite 200
Cary, NC 27518
(919) 852-0468
(919) 852-0598 (Fax)
www.simpsonengr.com
LICENSURE NO. C-2521

NORTH CAROLINA PROFESSIONAL SEAL 11268 ENGINEER BETSY S. COX
5/18/2016

DOCUMENT NOT CONSIDERED FINAL
UNLESS ALL SIGNATURES COMPLETED

| REVISIONS | | | | | | SHEET NO. |
|---|---|---|---|---|---|---|
| NO. | BY: | DATE: | NO. | BY: | DATE: | S-2 |
| 1 | | | 3 | | | TOTAL SHEETS |
| 2 | | | 4 | | | 16 |

DRAWN BY: T. BANKOVICH DATE: 5-16
CHECKED BY: B.S. COX DATE: 5-16
DESIGN ENGINEER OF RECORD: B.S. COX DATE: 5-16

5/18/2016 12:39:07 PM G:\Projects\2014\BD-5107AC (Guilford 229)\Structures\Drawings\Final\BD-5107AC_sd_gd.dgn

DocuSign Envelope ID: 1DC6E195-B4BB-4A7E-9ED0-E5C60B3EA188

# LOAD AND RESISTANCE FACTOR RATING (LRFR) SUMMARY FOR PRESTRESSED CONCRETE GIRDERS

| LEVEL | | VEHICLE | WEIGHT (W) (TONS) | CONTROLLING LOAD RATING | MINIMUM RATING FACTORS (RF) | TONS = W X RF | STRENGTH I LIMIT STATE | | | | | | | | | | | SERVICE III LIMIT STATE | | | | | | COMMENT NUMBER |
|---|---|---|---|---|---|---|---|---|---|---|---|---|---|---|---|---|---|---|---|---|---|---|---|---|
| | | | | | | | | MOMENT | | | | | SHEAR | | | | | | MOMENT | | | | | |
| | | | | | | | LIVELOAD FACTORS | DISTRIBUTION FACTORS (DF) | RATING FACTOR | SPAN | GIRDER LOCATION | DISTANCE FROM LEFT END OF SPAN (ft) | DISTRIBUTION FACTORS (DF) | RATING FACTOR | SPAN | GIRDER LOCATION | DISTANCE FROM LEFT END OF SPAN (ft) | LIVELOAD FACTORS | DISTRIBUTION FACTORS (DF) | RATING FACTOR | SPAN | GIRDER LOCATION | DISTANCE FROM LEFT END OF SPAN (ft) | |
| DESIGN LOAD RATING | | HL-93(Inv) | N/A | **1** | 1.109 | -- | 1.75 | 0.272 | 1.47 | A | EL | 44.25 | 0.493 | 1.26 | A | EL | 4.425 | 0.80 | 0.272 | **1.11** | A | EL | **44.25** | |
| | | HL-93(Opr) | N/A | -- | 1.633 | -- | 1.35 | 0.272 | 1.9 | A | EL | 44.25 | 0.493 | 1.63 | A | EL | 4.425 | N/A | -- | -- | -- | -- | -- | |
| | | HS-20(Inv) | 36.000 | **2** | 1.507 | 54.255 | 1.75 | 0.272 | 1.99 | A | EL | 44.25 | 0.493 | 1.65 | A | EL | 4.425 | 0.80 | 0.272 | **1.51** | A | EL | **44.25** | |
| | | HS-20(Opr) | 36.000 | -- | 2.14 | 77.039 | 1.35 | 0.272 | 2.59 | A | EL | 44.25 | 0.493 | 2.14 | A | EL | 4.425 | N/A | -- | -- | -- | -- | -- | |
| LEGAL LOAD RATING | SV | SNSH | 13.500 | -- | 3.519 | 47.501 | 1.4 | 0.272 | 5.82 | A | EL | 44.25 | 0.493 | 5.05 | A | EL | 4.425 | 0.80 | 0.272 | 3.52 | A | EL | 44.25 | |
| | | SNGARBS2 | 20.000 | -- | 2.572 | 51.43 | 1.4 | 0.272 | 4.25 | A | EL | 44.25 | 0.493 | 3.55 | A | EL | 4.425 | 0.80 | 0.272 | 2.57 | A | EL | 44.25 | |
| | | SNAGRIS2 | 22.000 | -- | 2.415 | 53.122 | 1.4 | 0.272 | 4 | A | EL | 44.25 | 0.493 | 3.27 | A | EL | 4.425 | 0.80 | 0.272 | 2.41 | A | EL | 44.25 | |
| | | SNCOTTS3 | 27.250 | -- | 1.749 | 47.674 | 1.4 | 0.272 | 2.89 | A | EL | 44.25 | 0.493 | 2.52 | A | EL | 4.425 | 0.80 | 0.272 | 1.75 | A | EL | 44.25 | |
| | | SNAGGRS4 | 34.925 | -- | 1.443 | 50.381 | 1.4 | 0.272 | 2.39 | A | EL | 44.25 | 0.493 | 2.06 | A | EL | 4.425 | 0.80 | 0.272 | 1.44 | A | EL | 44.25 | |
| | | SNS5A | 35.550 | -- | 1.412 | 50.195 | 1.4 | 0.272 | 2.34 | A | EL | 44.25 | 0.493 | 2.07 | A | EL | 4.425 | 0.80 | 0.272 | 1.41 | A | EL | 44.25 | |
| | | SNS6A | 39.950 | -- | 1.287 | 51.435 | 1.4 | 0.272 | 2.13 | A | EL | 44.25 | 0.493 | 1.88 | A | EL | 4.425 | 0.80 | 0.272 | 1.29 | A | EL | 44.25 | |
| | | SNS7B | 42.000 | -- | 1.226 | 51.483 | 1.4 | 0.272 | 2.03 | A | EL | 44.25 | 0.493 | 1.83 | A | EL | 4.425 | 0.80 | 0.272 | 1.23 | A | EL | 44.25 | |
| | TTST | TNAGRIT3 | 33.000 | -- | 1.568 | 51.733 | 1.4 | 0.272 | 2.59 | A | EL | 44.25 | 0.493 | 2.24 | A | EL | 4.425 | 0.80 | 0.272 | 1.57 | A | EL | 44.25 | |
| | | TNT4A | 33.075 | -- | 1.572 | 52.007 | 1.4 | 0.272 | 2.6 | A | EL | 44.25 | 0.493 | 2.2 | A | EL | 4.425 | 0.80 | 0.272 | 1.57 | A | EL | 44.25 | |
| | | TNT6A | 41.600 | -- | 1.278 | 53.17 | 1.4 | 0.272 | 2.11 | A | EL | 44.25 | 0.493 | 1.92 | A | EL | 4.425 | 0.80 | 0.272 | 1.28 | A | EL | 44.25 | |
| | | TNT7A | 42.000 | -- | 1.281 | 53.782 | 1.4 | 0.272 | 2.12 | A | EL | 44.25 | 0.493 | 1.89 | A | EL | 4.425 | 0.80 | 0.272 | 1.28 | A | EL | 44.25 | |
| | | TNT7B | 42.000 | -- | 1.315 | 55.229 | 1.4 | 0.272 | 2.18 | A | EL | 44.25 | 0.493 | 1.79 | A | EL | 4.425 | 0.80 | 0.272 | 1.31 | A | EL | 44.25 | |
| | | TNAGRIT4 | 43.000 | -- | 1.258 | 54.101 | 1.4 | 0.272 | 2.08 | A | EL | 44.25 | 0.493 | 1.74 | A | EL | 4.425 | 0.80 | 0.272 | 1.26 | A | EL | 44.25 | |
| | | TNAGT5A | 45.000 | -- | 1.19 | 53.537 | 1.4 | 0.272 | 1.97 | A | EL | 44.25 | 0.493 | 1.71 | A | EL | 4.425 | 0.80 | 0.272 | 1.19 | A | EL | 44.25 | |
| | | TNAGT5B | 45.000 | **3** | 1.178 | 53.027 | 1.4 | 0.272 | 1.95 | A | EL | 44.25 | 0.493 | 1.66 | A | EL | 4.425 | 0.80 | 0.272 | **1.18** | A | EL | **44.25** | |

## LOAD FACTORS:

| DESIGN LOAD RATING FACTORS | LIMIT STATE | $\gamma_{DC}$ | $\gamma_{DW}$ |
|---|---|---|---|
| | STRENGTH I | 1.25 | 1.50 |
| | SERVICE III | 1.00 | 1.00 |

## NOTES:

MINIMUM RATING FACTORS ARE BASED ON THE STRENGTH I AND SERVICE III LIMIT STATES.

ALLOWABLE STRESSES FOR SERVICE III LIMIT STATE ARE AS REQUIRED FOR DESIGN.

## CONTROLLING LOAD RATING

1. DESIGN LOAD RATING (HL-93)
2. DESIGN LOAD RATING (HS-20)
3. LEGAL LOAD RATING **

** SEE CHART FOR VEHICLE TYPE

## GIRDER LOCATION

I - INTERIOR GIRDER
EL - EXTERIOR LEFT GIRDER
ER - EXTERIOR RIGHT GIRDER

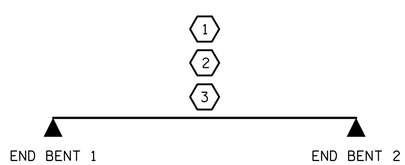


LRFR SUMMARY

PROJECT NO. 17BP.7.R.105
GUILFORD COUNTY
STATION: 14+05.00 -L-

STATE OF NORTH CAROLINA
DEPARTMENT OF TRANSPORTATION
RALEIGH

LRFR SUMMARY FOR 90'-0" BOX BEAM UNIT 90° SKEW

(NON-INTERSTATE TRAFFIC)

PLANS PREPARED BY:
SIMPSON ENGINEERS & ASSOCIATES
5640 Dillard Drive
Suite 200
Cary, NC 27518
(919) 852-0468
(919) 852-0598 (Fax)
www.simpsonengr.com
LICENSURE NO. C-2521

NORTH CAROLINA PROFESSIONAL SEAL 042268 ENGINEER BETSY S. COX
5/18/2016

DOCUMENT NOT CONSIDERED FINAL UNLESS ALL SIGNATURES COMPLETED

| REVISIONS | | | | | | |
|---|---|---|---|---|---|---|
| NO. | BY: | DATE: | NO. | BY: | DATE: | |
| 1 | | | 3 | | | |
| 2 | | | 4 | | | |

SHEET NO. S-3
TOTAL SHEETS 16

DRAWN BY: T. BANKOVICH DATE: 5-16
CHECKED BY: B.S. COX DATE: 5-16
DESIGN ENGINEER OF RECORD: B.S. COX DATE: 5-16

5/18/2016 12:39:07 PM G:\Projects\2014\BD-5107AC (Guilford 229)\Structures\Drawings\Final\BD-5107AC_sd_lrfr.dgn

DocuSign Envelope ID: 1DC6E195-B4BB-4A7E-9ED0-E5C60B3EA188

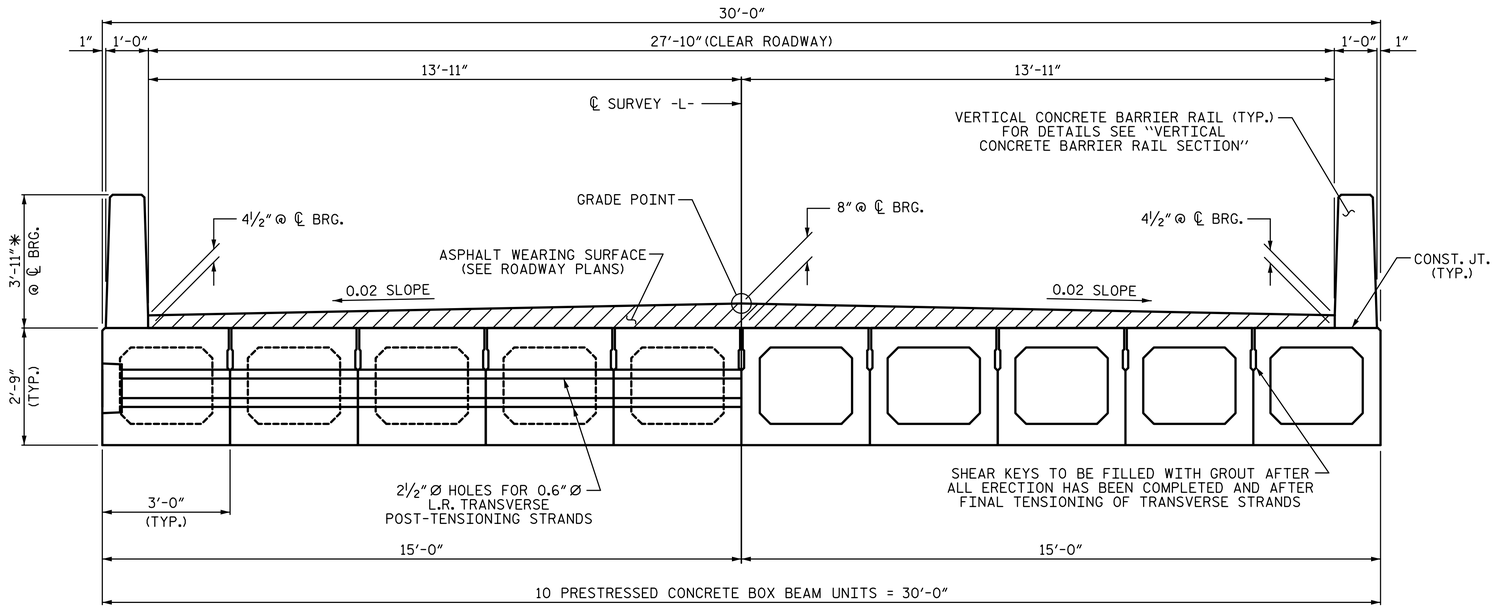


HALF SECTION
(AT INTERMEDIATE DIAPHRAGMS)

HALF SECTION
(THROUGH VOIDS)

## TYPICAL SECTION

✱ - THE MAXIMUM BARRIER RAIL HEIGHT AND ASPHALT THICKNESS IS SHOWN. THE HEIGHT OF THE BARRIER RAIL AND ASPHALT THICKNESS VARIES WHILE THE TOP OF THE BARRIER RAIL FOLLOWS THE PROFILE OF THE GUTTERLINE. FOR RAIL HEIGHT DETAILS AND ASPHALT THICKNESS, SEE THE "VERTICAL CONCRETE BARRIER RAIL SECTION" DETAIL.

FIXED END

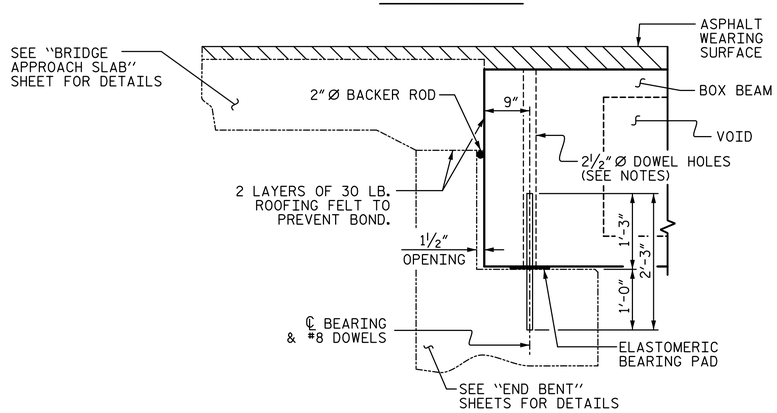


## SECTION AT END BENT

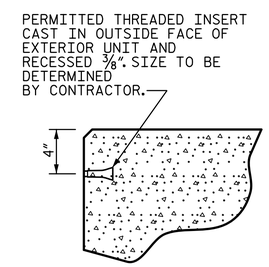


## THREADED INSERT DETAIL

## NOTES:

ALL PRESTRESSING STRANDS SHALL BE 7-WIRE LOW RELAXATION GRADE 270 STRANDS AND SHALL CONFORM TO AASHTO M203 EXCEPT FOR SAMPLING REQUIREMENTS WHICH SHALL BE IN ACCORDANCE WITH THE STANDARD SPECIFICATIONS.

ALL REINFORCING STEEL CAST WITH THE BOX BEAM SECTIONS SHALL BE GRADE 60 AND SHALL BE INCLUDED IN THE UNIT PRICE BID FOR PRESTRESSED CONCRETE BOX BEAMS.

FLAME CUTTING OF THE TRANSVERSE POST-TENSIONING STRAND IS NOT ALLOWED.

RECESSES FOR TRANSVERSE STRANDS SHALL BE GROUTED AFTER THE TENSIONING OF THE STRANDS.

THE 2½" Ø DOWEL HOLES AT FIXED ENDS OF BOX BEAM SECTIONS SHALL BE FILLED WITH NON-SHRINK GROUT.

THE BACKER RODS SHALL CONFORM TO THE REQUIREMENTS OF TYPE M BOND BREAKER. SEE SECTION 1028 OF THE STANDARD SPECIFICATIONS.

THE TRANSFER OF LOAD FROM THE ANCHORAGES TO THE BOX BEAM UNIT SHALL BE DONE WHEN THE CONCRETE HAS REACHED A COMPRESSIVE STRENGTH OF NOT LESS THAN 6000 PSI.

ALL REINFORCING STEEL IN VERTICAL CONCRETE BARRIER RAILS SHALL BE EPOXY COATED.

PRESTRESSING STRANDS SHALL BE CUT FLUSH WITH THE BOX BEAM UNIT ENDS.

APPLY EPOXY PROTECTIVE COATING TO BOX BEAM UNIT ENDS.

VERTICAL GROOVED CONTRACTION JOINTS, ½" IN DEPTH, SHALL BE TOOLED IN ALL EXPOSED FACES OF THE BARRIER RAIL AND IN ACCORDANCE WITH ARTICLE 825-10(B) OF THE STANDARD SPECIFICATIONS. A VERTICAL CONTRACTION JOINT SHALL BE LOCATED AT EACH THIRD POINT BETWEEN BARRIER RAIL EXPANSION JOINTS. ONLY ONE CONTRACTION JOINT IS REQUIRED AT MIDPOINT OF BARRIER RAIL SEGMENTS LESS THAN 20 FEET IN LENGTH AND NO CONTRACTION JOINTS ARE REQUIRED FOR THOSE SEGMENTS LESS THAN 10 FEET IN LENGTH.

THE LOCATION OF THE VOID DRAINS MAY BE SHIFTED SLIGHTLY WHERE NECESSARY TO CLEAR PRESTRESSING STRANDS OR TRANSVERSE REINFORCING STEEL.

FOR GROUT FOR STRUCTURES, SEE SPECIAL PROVISIONS.

THE PERMITTED THREADED INSERTS ARE DETAILED AS AN OPTION FOR THE CONTRACTOR TO ATTACH FALSEWORK AND FORMWORK DURING CONSTRUCTION.

THE PERMITTED THREADED INSERTS IN THE EXTERIOR UNITS SHALL BE SIZED BY THE CONTRACTOR, SPACED AT 4'-0" CENTERS AND GALVANIZED IN ACCORDANCE WITH SECTION 1076 OF THE STANDARD SPECIFICATIONS. STAINLESS STEEL THREADED INSERTS MAY BE USED AS AN ALTERNATE.

THE PERMITTED THREADED INSERTS SHALL BE GROUTED BY THE CONTRACTOR IMMEDIATELY FOLLOWING REMOVAL OF THE FALSEWORK.

THE COST OF THE PERMITTED THREADED INSERTS SHALL BE INCLUDED IN THE PRICE BID FOR THE PRECAST UNITS.

PROJECT NO. 17BP.7.R.105
GUILFORD COUNTY
STATION: 14+05.00 -L-

SHEET 1 OF 5

STATE OF NORTH CAROLINA
DEPARTMENT OF TRANSPORTATION
RALEIGH
SUPERSTRUCTURE

3'-0" X 2'-9"
PRESTRESSED CONCRETE
BOX BEAM UNIT

PLANS PREPARED BY:
SIMPSON ENGINEERS & ASSOCIATES
5640 Dillard Drive
Suite 200
Cary, NC 27518
(919) 852-0468
(919) 852-0598 (Fax)
www.simpsonengr.com
LICENSURE NO. C-2521

NORTH CAROLINA PROFESSIONAL SEAL L1268 ENGINEER BETSY S. COX
5/18/2016

DOCUMENT NOT CONSIDERED FINAL
UNLESS ALL SIGNATURES COMPLETED

| REVISIONS | | | | | | | | SHEET NO. |
|---|---|---|---|---|---|---|---|---|
| NO. | BY: | DATE: | NO. | BY: | DATE: | | | S-4 |
| 1 | | | 3 | | | | | TOTAL SHEETS |
| 2 | | | 4 | | | | | 16 |

DRAWN BY: S.D. COOPER DATE: 5-16
CHECKED BY: B.S. COX DATE: 5-16
DESIGN ENGINEER OF RECORD: B.S. COX DATE: 5-16

5/18/2016 12:39:07 PM G:\Projects\2014\BD-5107AC (Guilford 229)\Structures\Drawings\Final\BD-5107AC_superstructure.dgn

DocuSign Envelope ID: 1DC6E195-B4BB-4A7E-9ED0-E5C60B3EA188

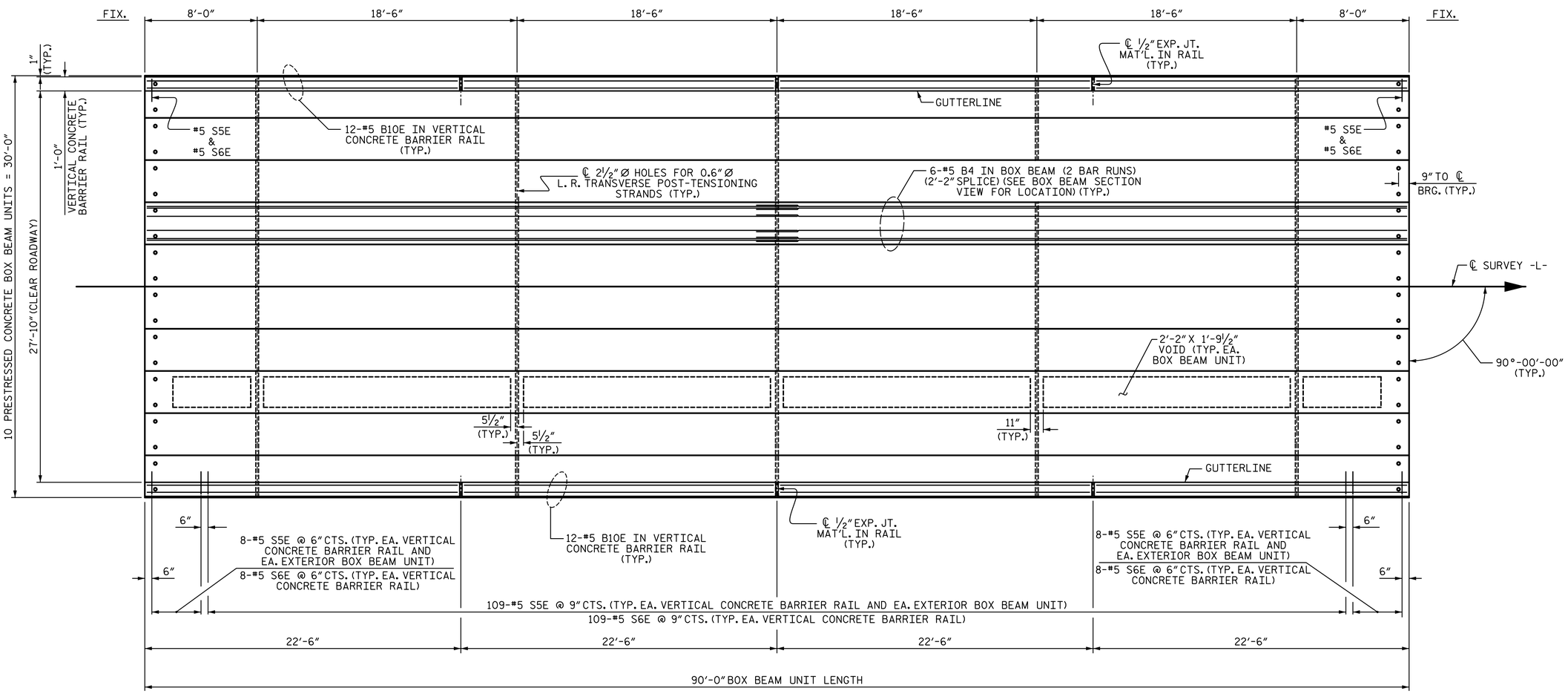


## PLAN OF UNIT

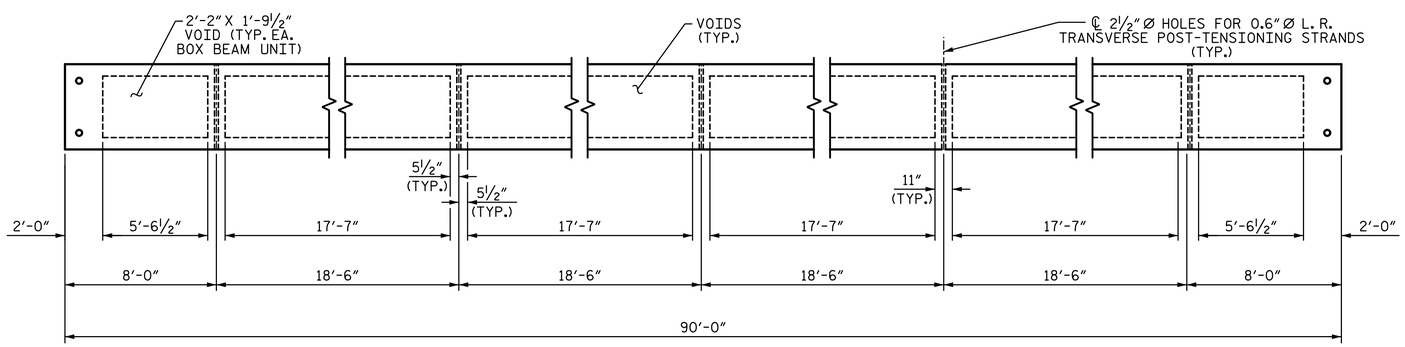


## DIAPHRAGM AND VOID LAYOUT

PROJECT NO. 17BP.7.R.105

GUILFORD COUNTY

STATION: 14+05.00 -L-

SHEET 2 OF 5

STATE OF NORTH CAROLINA
DEPARTMENT OF TRANSPORTATION
RALEIGH

# PLAN OF SPAN A (90'-0" UNIT) 27'-10" CLEAR ROADWAY

90° SKEW

PLANS PREPARED BY:
SIMPSON ENGINEERS & ASSOCIATES
5640 Dillard Drive
Suite 200
Cary, NC 27518
(919) 852-0468
(919) 852-0598 (Fax)
www.simpsonengr.com
LICENSURE NO. C-2521

NORTH CAROLINA PROFESSIONAL SEAL 11268 ENGINEER BETSY S. COX
5/18/2016

DOCUMENT NOT CONSIDERED FINAL UNLESS ALL SIGNATURES COMPLETED

| REVISIONS | | | | | | |
|---|---|---|---|---|---|---|
| NO. | BY: | DATE: | NO. | BY: | DATE: | |
| 1 | | | 3 | | | |
| 2 | | | 4 | | | |

SHEET NO. S-5

TOTAL SHEETS 16

DRAWN BY: S.D. COOPER DATE: 5-16
CHECKED BY: B.S. COX DATE: 5-16
DESIGN ENGINEER OF RECORD: B.S. COX DATE: 5-16

5/18/2016 12:39:08 PM G:\Projects\2014\BD-5107AC (Guilford 229)\Structures\Drawings\Final\BD-5107AC_superstructure.dgn

DocuSign Envelope ID: 1DC6E195-B4BB-4A7E-9ED0-E5C60B3EA188

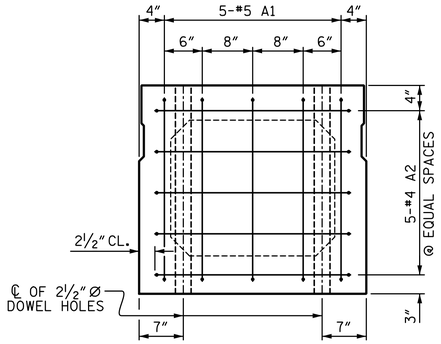


## END ELEVATION

SHOWING PLACEMENT OF #5 & #4 "A" BARS AND LOCATION OF DOWEL HOLES. (INTERIOR BOX BEAM SECTION SHOWN-EXTERIOR SECTION SIMILAR EXCEPT SHEAR KEY LOCATION. STRAND LAYOUT NOT SHOWN.)

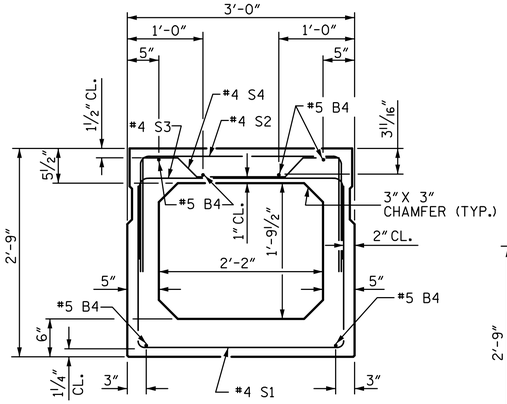


## INTERIOR BOX BEAM SECTION

(STRAND LAYOUT NOT SHOWN)

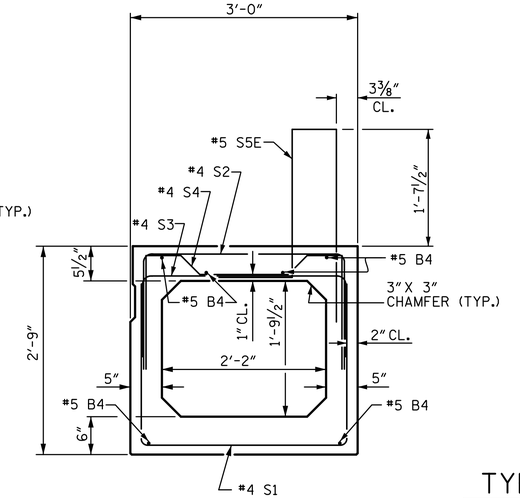


## EXTERIOR BOX BEAM SECTION

(STRAND LAYOUT NOT SHOWN)

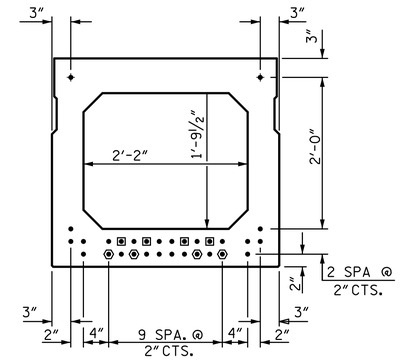


## TYPICAL STRAND LOCATION

(30 STRANDS REQUIRED)

## 0.6" Ø LOW RELAXATION STRAND LAYOUT

- ● FULLY BONDED STRANDS
- ▣ STRANDS DEBONDED FOR 4'-0" FROM END OF GIRDER
- ⬢ STRANDS DEBONDED FOR 12'-0" FROM END OF GIRDER

BOND SHALL BE BROKEN ON STRANDS AS SHOWN FOR THE SPECIFIED LENGTH FROM EACH END OF THE BOX BEAM. SEE STANDARD SPECIFICATIONS ARTICLE 1078-7.

## DEBONDING LEGEND

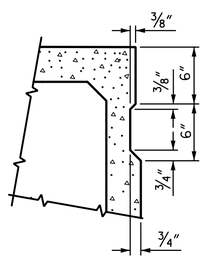


## SHEAR KEY DETAIL

NOTE: OMIT SHEAR KEY ON OUTSIDE FACE OF EXTERIOR BOX BEAMS.

## BAR TYPES

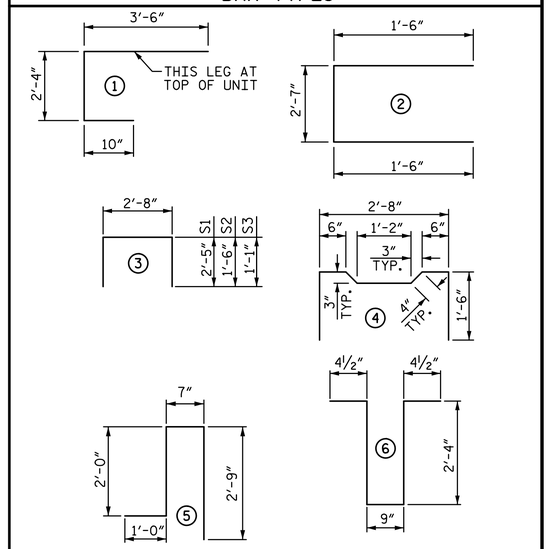


ALL BAR DIMENSIONS ARE OUT TO OUT

## BILL OF MATERIAL FOR ONE BOX BEAM SECTION

| | | | | EXTERIOR UNIT | | INTERIOR UNIT | |
|---|---|---|---|---|---|---|---|
| BAR | NUMBER | SIZE | TYPE | LENGTH | WEIGHT | LENGTH | WEIGHT |
| A1 | 10 | #5 | 1 | 6'-8" | 70 | 6'-8" | 70 |
| A2 | 40 | #4 | 2 | 5'-7" | 149 | 5'-7" | 149 |
| | | | | | | | |
| B4 | 12 | #5 | STR | 45'-11" | 575 | 45'-11" | 575 |
| | | | | | | | |
| K1 | 15 | #4 | 6 | 6'-2" | 62 | 6'-2" | 62 |
| K2 | 10 | #4 | STR | 2'-7" | 17 | 2'-7" | 17 |
| | | | | | | | |
| S1 | 73 | #4 | 3 | 7'-6" | 366 | 7'-6" | 366 |
| S2 | 73 | #4 | 3 | 5'-8" | 276 | 5'-8" | 276 |
| S3 | 127 | #4 | 3 | 4'-10" | 410 | 4'-10" | 410 |
| S4 | 54 | #4 | 4 | 5'-10" | 210 | 5'-10" | 210 |
| | | | | | | | |
| S5E | 125 | #5 | 5 | 6'-4" | 826 | -- | -- |
| | | | | | | | |
| REINFORCING STEEL | | | | 2135 | LB | 2135 | LB |
| "E" EPOXY COATED REINF. STEEL | | | | 826 | LB | | |
| 8000 P.S.I. CONCRETE | | | | 16.0 | CY | 15.9 | CY |
| | | | | | | | |
| 0.6" Ø L.R. STRANDS | | | | No. 30 | | No. 30 | |

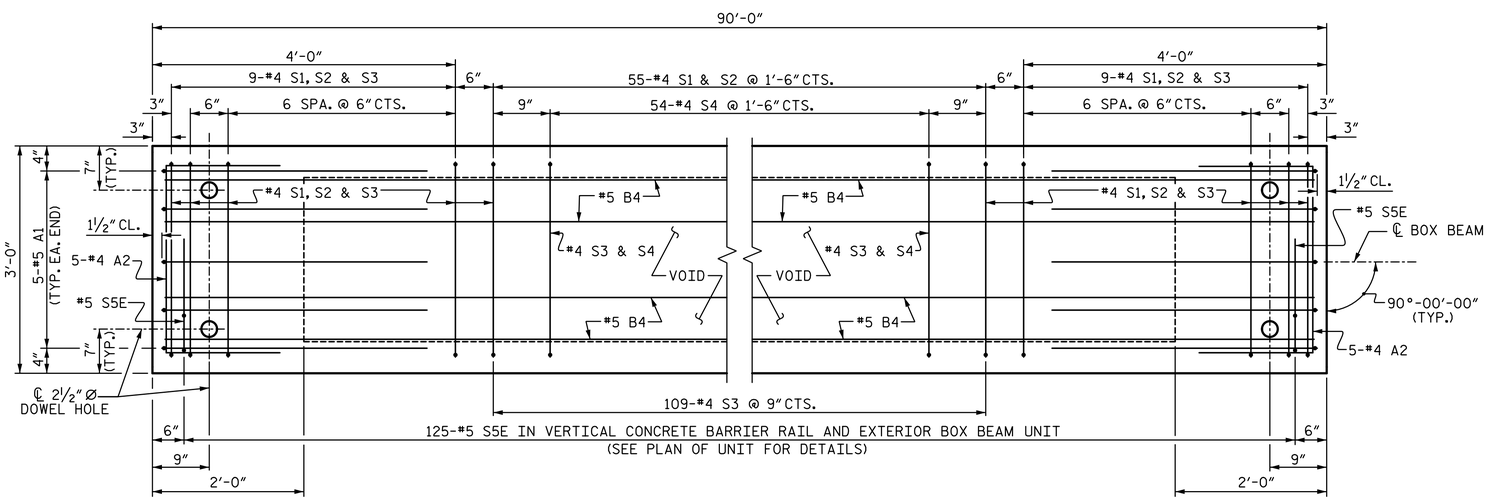


## PLAN OF BOX BEAM

EXTERIOR UNIT SHOWN, INTERIOR UNIT SIMILAR EXCEPT OMIT #5 S5E BARS.
FOR LOCATION OF DIAPHRAGMS, SEE PLAN OF UNIT.
FOR REINFORCING STEEL IN DIAPHRAGMS, SEE DIAPHRAGM DETAILS.

| GRADE 270 STRANDS | |
|---|---|
| | 0.6" Ø L.R. |
| AREA ( SQUARE INCHES ) | 0.217 |
| ULTIMATE STRENGTH ( LBS. PER STRAND ) | 58,600 |
| APPLIED PRESTRESS ( LBS. PER STRAND ) | 43,950 |

PROJECT NO. 17BP.7.R.105
GUILFORD COUNTY
STATION: 14+05.00 -L-

SHEET 3 OF 5

STATE OF NORTH CAROLINA
DEPARTMENT OF TRANSPORTATION
RALEIGH

SUPERSTRUCTURE

# 3'-0" X 2'-9" PRESTRESSED CONCRETE BOX BEAM UNIT

PLANS PREPARED BY:
SIMPSON ENGINEERS & ASSOCIATES
5640 Dillard Drive
Suite 200
Cary, NC 27518
(919) 852-0468
(919) 852-0598 (Fax)
www.simpsonengr.com
LICENSURE NO. C-2521

NORTH CAROLINA PROFESSIONAL SEAL 11268 ENGINEER BETSY S. COX
5/18/2016

DOCUMENT NOT CONSIDERED FINAL UNLESS ALL SIGNATURES COMPLETED

| REVISIONS | | | | | | SHEET NO. |
|---|---|---|---|---|---|---|
| NO. | BY: | DATE: | NO. | BY: | DATE: | S-6 |
| 1 | | | 3 | | | TOTAL SHEETS |
| 2 | | | 4 | | | 16 |

| | | | |
|---|---|---|---|
| DRAWN BY: | S.D. COOPER | DATE: | 5-16 |
| CHECKED BY: | B.S. COX | DATE: | 5-16 |
| DESIGN ENGINEER OF RECORD: | B.S. COX | DATE: | 5-16 |

5/18/2016 12:39:08 PM G:\Projects\2014\BD-5107AC (Guilford 229)\Structures\Drawings\Final\BD-5107AC_superstructure.dgn

DocuSign Envelope ID: 1DC6E195-B4BB-4A7E-9ED0-E5C60B3EA188

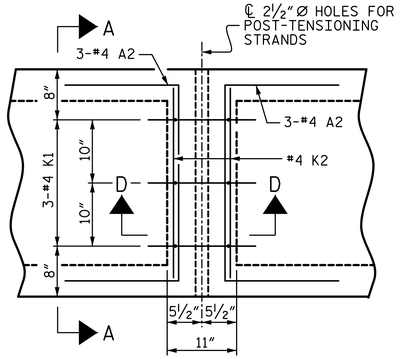


PLAN

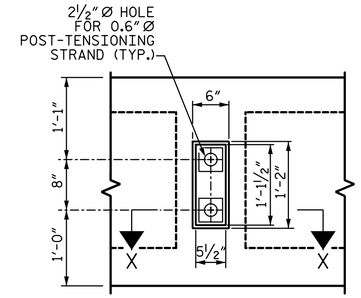


VIEW Y-Y

(SHOWING ELEVATION VIEW OF GROUTED RECESS)

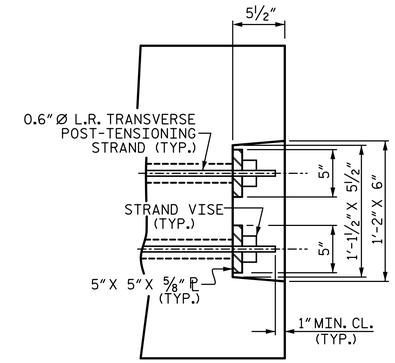


DETAIL "C"

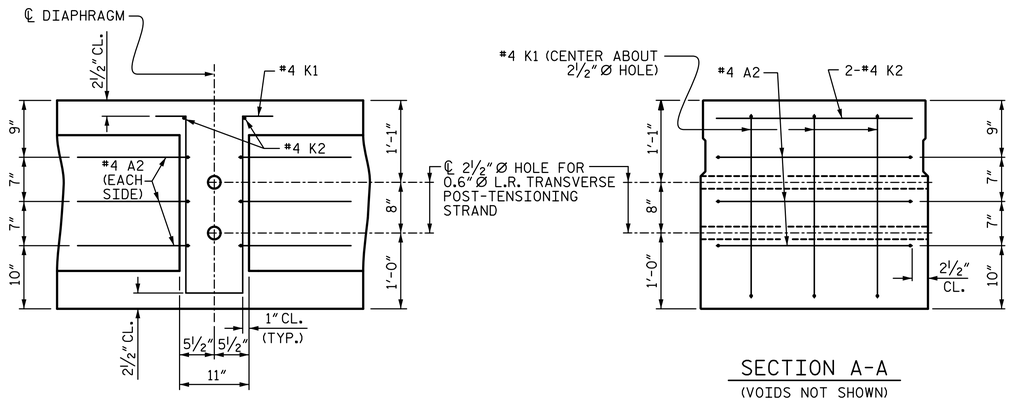


SECTION D-D

SECTION A-A

(VOIDS NOT SHOWN)

## DOUBLE DIAPHRAGM DETAILS

(#4 "S" BARS NOT SHOWN. #4 "S" BARS MAY BE SHIFTED SLIGHTLY TO CLEAR 2½"Ø HOLE.)

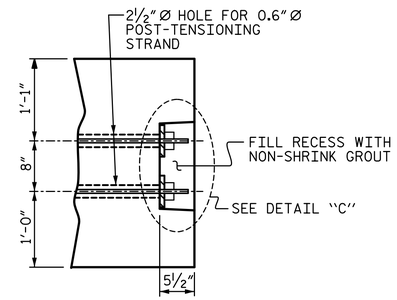


PART SECTION AT RECESS

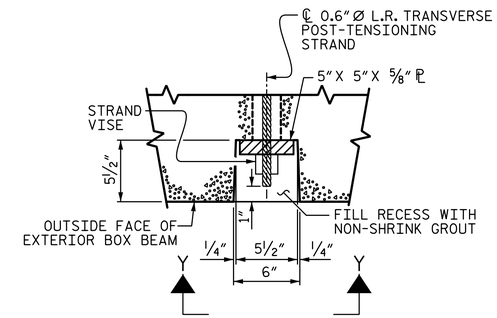


SECTION X-X

(SHOWING PLAN VIW OF GROUTED RECESS)

## GROUTED RECESS DETAIL AT END OF POST-TENSIONED STRANDS OF EXTERIOR BOX BEAM

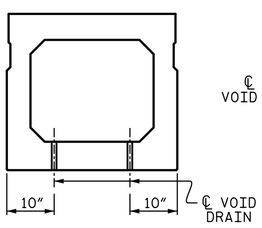


SECTION B-B

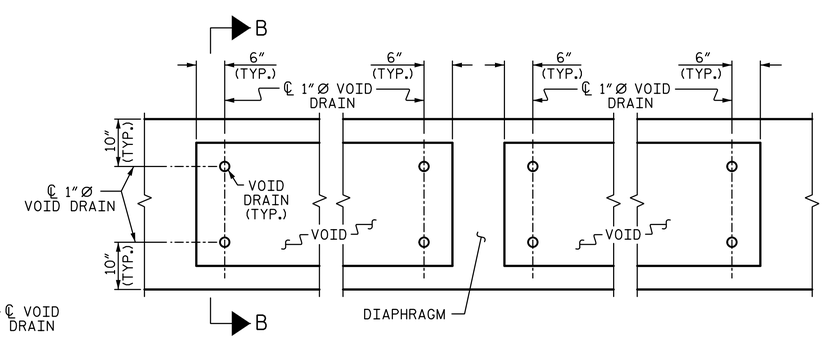


PART PLAN

## VOID DRAIN DETAILS

(DIMENSIONS SHOWN ARE TYPICAL FOR EACH VOID)

| DEAD LOAD DEFLECTION AND CAMBER | |
|---|---|
| | 3'-0"x 2'-9" |
| 90' BOX BEAM UNIT | 0.6"Ø L.R. STRAND |
| CAMBER (SLAB ALONE IN PLACE) | 3¾" ↑ |
| DEFLECTION DUE TO SUPERIMPOSED DEAD LOAD** | ¾" ↓ |
| FINAL CAMBER | 3" ↑ |

** INCLUDES FUTURE WEARING SURFACE

PROJECT NO. 17BP.7.R.105

GUILFORD COUNTY

STATION: 14+05.00 -L-

SHEET 4 OF 5

STATE OF NORTH CAROLINA
DEPARTMENT OF TRANSPORTATION
RALEIGH

SUPERSTRUCTURE

3'-0"x 2'-9"
PRESTRESSED CONCRETE
BOX BEAM UNIT

PLANS PREPARED BY:

SIMPSON ENGINEERS & ASSOCIATES
5640 Dillard Drive
Suite 200
Cary, NC 27518
(919) 852-0468
(919) 852-0598 (Fax)
www.simpsonengr.com

LICENSURE NO. C-2521

NORTH CAROLINA PROFESSIONAL SEAL 11868 ENGINEER BETSY S. COX

5/18/2016

DOCUMENT NOT CONSIDERED FINAL UNLESS ALL SIGNATURES COMPLETED

| REVISIONS | | | | | | SHEET NO. |
|---|---|---|---|---|---|---|
| NO. | BY: | DATE: | NO. | BY: | DATE: | S-7 |
| 1 | | | 3 | | | TOTAL SHEETS |
| 2 | | | 4 | | | 16 |

DRAWN BY: S.D. COOPER DATE: 5-16
CHECKED BY: B.S. COX DATE: 5-16
DESIGN ENGINEER OF RECORD: B.S. COX DATE: 5-16

5/18/2016 12:39:08 PM G:\Projects\2014\BD-5107AC (Guilford 229)\Structures\Drawings\Final\BD-5107AC_superstructure.dgn

DocuSign Envelope ID: 1DC6E195-B4BB-4A7E-9ED0-E5C60B3EA188

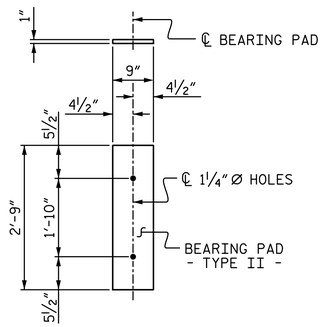


FIXED END
(TYPE II - 20 REQ'D)

## ELASTOMERIC BEARING DETAILS

(ELASTOMER IN ALL BEARINGS SHALL BE 60 DUROMETER HARDNESS.)

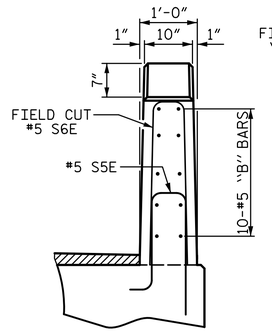


END VIEW

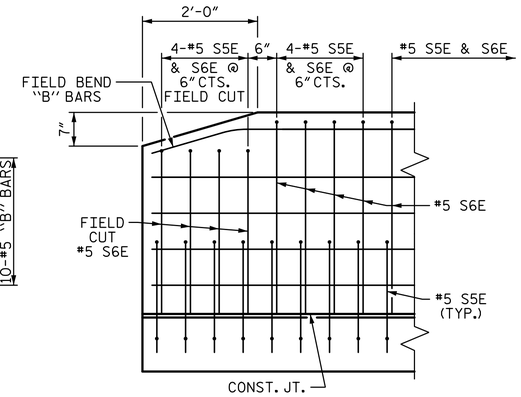


SIDE VIEW

## END OF RAIL DETAILS

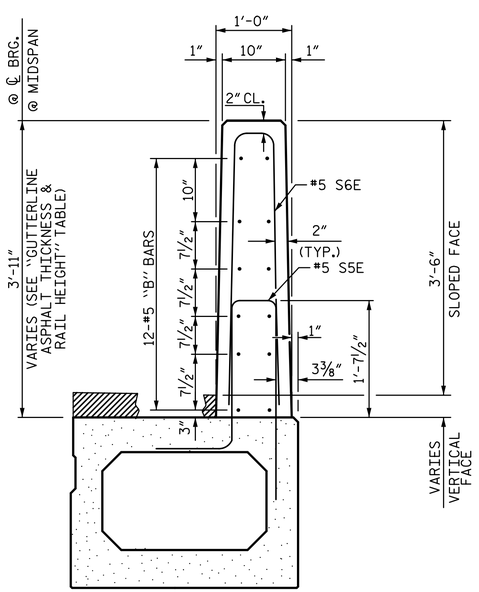


SECTION THRU RAIL

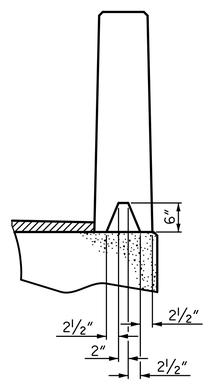


SECTION S-S
AT DAM IN OPEN JOINT
(THIS IS TO BE USED ONLY
WHEN SLIP FORM IS USED)

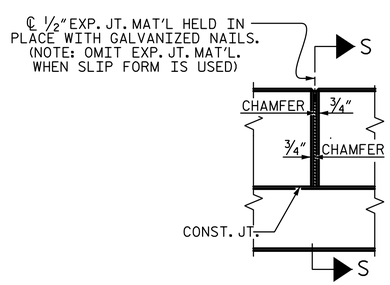


ELEVATION AT EXPANSION JOINTS

## VERTICAL CONCRETE BARRIER RAIL DETAILS

BAR TYPES

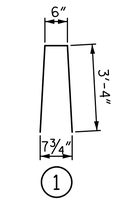


ALL BAR DIMENSIONS ARE OUT TO OUT

| BOX BEAM UNITS REQUIRED | | | |
|---|---|---|---|
| | NUMBER | LENGTH | TOTAL LENGTH |
| EXTERIOR B.B. | 2 | 90'-0" | 180'-0" |
| INTERIOR B.B. | 8 | 90'-0" | 720'-0" |
| TOTAL | 10 | ——— | 900'-0" |

| BILL OF MATERIAL FOR VERTICAL CONCRETE BARRIER RAIL | | | | | |
|---|---|---|---|---|---|
| BAR | BARS PER PAIR OF EXTERIOR UNITS | SIZE | TYPE | LENGTH | WEIGHT |
| | 90' UNIT | | | | |
| | | | | | |
| B10E | 96 | #5 | STR | 22'-1" | 2211 |
| | | | | | |
| S6E | 250 | #5 | 1 | 7'-2" | 1869 |
| | | | | | |
| "E" EPOXY COATED REINFORCING STEEL | | | LB | | 4080 |
| CLASS AA CONCRETE | | | CY | | 24.2 |
| TOTAL VERTICAL CONCRETE BARRIER RAIL | | | LF | | 180.0 |

| GUTTERLINE ASPHALT THICKNESS & RAIL HEIGHT | | |
|---|---|---|
| | ASPHALT OVERLAY THICKNESS @ MID-SPAN | RAIL HEIGHT @ MID-SPAN |
| 90' UNITS | 1½" | 3'-8" |

PROJECT NO. 17BP.7.R.105
GUILFORD COUNTY
STATION: 14+05.00 -L-

SHEET 5 OF 5

STATE OF NORTH CAROLINA
DEPARTMENT OF TRANSPORTATION
RALEIGH

SUPERSTRUCTURE
3'-0" X 2'-9"
PRESTRESSED CONCRETE
BOX BEAM UNIT

PLANS PREPARED BY:
SIMPSON ENGINEERS & ASSOCIATES
5640 Dillard Drive
Suite 200
Cary, NC 27518
(919) 852-0468
(919) 852-0598 (Fax)
www.simpsonengr.com
LICENSURE NO. C-2521

NORTH CAROLINA PROFESSIONAL SEAL 19268 ENGINEER BETSY S. COX
5/18/2016

DOCUMENT NOT CONSIDERED FINAL
UNLESS ALL SIGNATURES COMPLETED

| REVISIONS | | | | | | | SHEET NO. |
|---|---|---|---|---|---|---|---|
| NO. | BY: | DATE: | NO. | BY: | DATE: | | S-8 |
| 1 | | | 3 | | | | TOTAL SHEETS |
| 2 | | | 4 | | | | 16 |

| | | | |
|---|---|---|---|
| DRAWN BY: | S.D. COOPER | DATE: | 5-16 |
| CHECKED BY: | B.S. COX | DATE: | 5-16 |
| DESIGN ENGINEER OF RECORD: | B.S. COX | DATE: | 5-16 |

5/18/2016 12:39:08 PM G:\Projects\2014\BD-5107AC (Guilford 229)\Structures\Drawings\Final\BD-5107AC_superstructure.dgn

DocuSign Envelope ID: 1DC6E195-B4BB-4A7E-9ED0-E5C60B3EA188

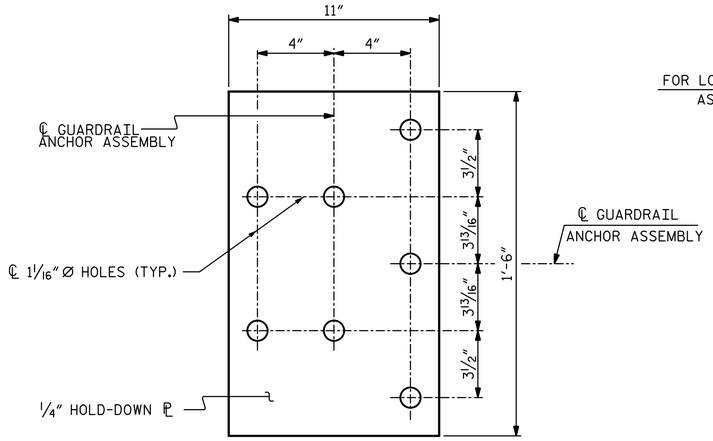


PLAN

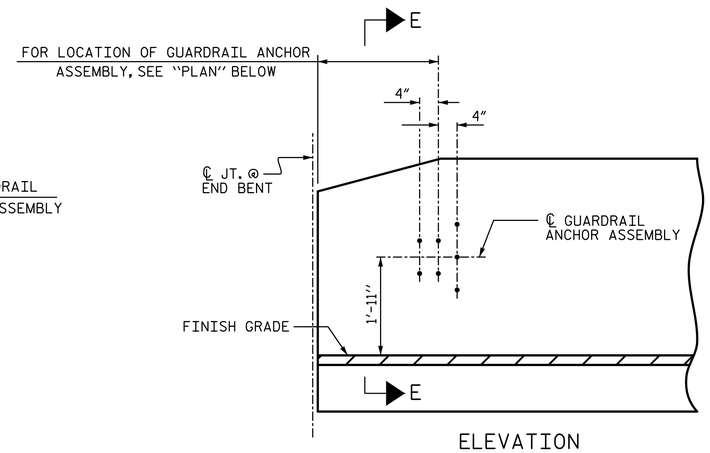


ELEVATION

## NOTES:

THE GUARDRAIL ANCHOR ASSEMBLY SHALL CONSIST OF A 1/4" HOLD DOWN PLATE AND 7 - 7/8" Ø BOLTS WITH NUTS AND WASHERS.

THE HOLD-DOWN PLATE SHALL CONFORM TO AASHTO M270 GRADE 36. AFTER FABRICATION, THE HOLD-DOWN PLATE SHALL BE HOT-DIP GALVANIZED IN ACCORDANCE WITH AASHTO M111.

BOLTS SHALL CONFORM TO THE REQUIREMENTS OF ASTM A307 AND NUTS SHALL CONFORM TO THE REQUIREMENTS OF AASHTO M291. BOLTS, NUTS AND WASHERS SHALL BE GALVANIZED. (AT THE CONTRACTOR'S OPTION, STAINLESS STEEL BOLTS, NUTS AND WASHERS MAY BE USED AS AN ALTERNATE FOR THE 7/8" Ø GALVANIZED BOLTS, NUTS AND WASHERS. THEY SHALL CONFORM TO OR EXCEED THE MECHANICAL REQUIREMENTS OF ASTM A307. THE USE OF THIS ALTERNATE SHALL BE APPROVED BY THE ENGINEER.)

THE GUARDRAIL ANCHOR ASSEMBLY IS REQUIRED AT ALL POINTS WHERE APPROACH GUARDRAIL IS TO BE ATTACHED TO THE END OF BARRIER RAIL. FOR POINTS OF ATTACHMENT, SEE SKETCH.

AFTER INSTALLATION, THE EXPOSED THREAD OF THE BOLT SHALL BE BURRED WITH A SHARP POINTED TOOL.

THE COST OF THE GUARDRAIL ANCHOR ASSEMBLY SHALL BE INCLUDED IN THE UNIT CONTRACT PRICE BID FOR VERTICAL CONCRETE BARRIER RAIL.

THE VERTICAL REINFORCING BARS MAY BE SHIFTED SLIGHTLY IN THE VERTICAL CONCRETE BARRIER RAIL TO CLEAR ASSEMBLY BOLTS.

THE 1 1/4" Ø HOLES SHALL BE FORMED OR DRILLED WITH A CORE BIT. IMPACT TOOLS WILL NOT BE PERMITTED. ANY CONCRETE DAMAGED BY THIS WORK SHALL BE REPAIRED TO THE SATISFACTION OF THE ENGINEER.

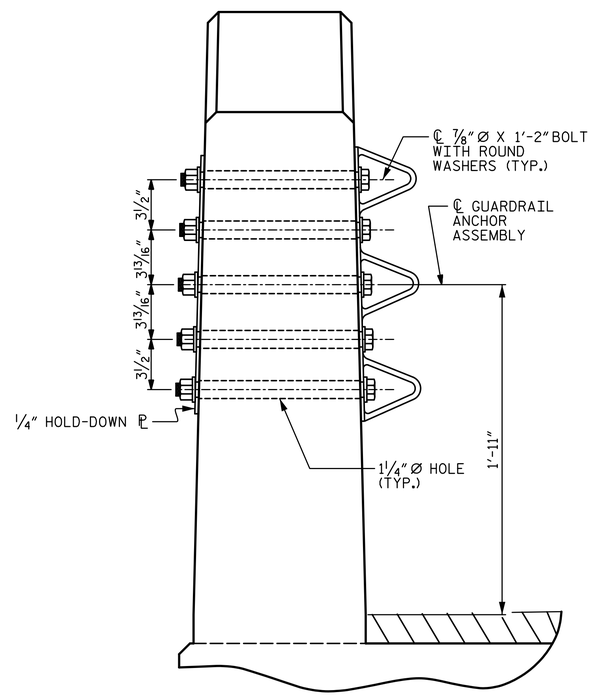


SECTION E-E

## GUARDRAIL ANCHOR ASSEMBLY DETAILS

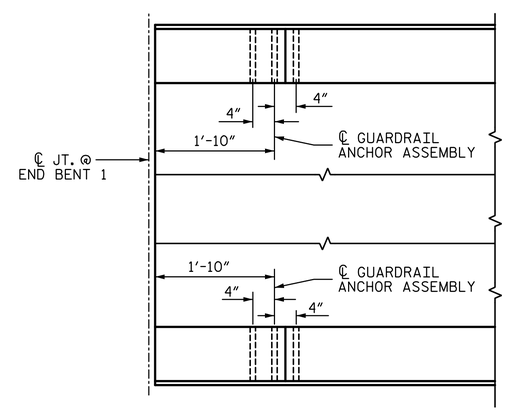


PLAN

## LOCATION OF ANCHORS FOR GUARDRAIL

END BENT 1 SHOWN, END BENT 2 SIMILAR.

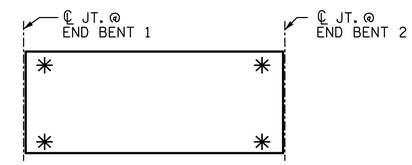


## SKETCH SHOWING POINTS OF ATTACHMENT

✳ DENOTES GUARDRAIL ANCHOR ASSEMBLY

PROJECT NO. 17BP.7.R.105
GUILFORD COUNTY
STATION: 14+05.00 -L-

PLANS PREPARED BY:
SIMPSON ENGINEERS & ASSOCIATES
5640 Dillard Drive
Suite 200
Cary, NC 27518
(919) 852-0468
(919) 852-0598 (Fax)
www.simpsonengr.com
LICENSURE NO. C-2521

NORTH CAROLINA PROFESSIONAL SEAL 11268 ENGINEER BETSY S. COX
5/18/2016

DOCUMENT NOT CONSIDERED FINAL UNLESS ALL SIGNATURES COMPLETED

STATE OF NORTH CAROLINA
DEPARTMENT OF TRANSPORTATION
RALEIGH
SUPERSTRUCTURE
GUARDRAIL ANCHORAGE FOR VERTICAL CONCRETE BARRIER RAIL

| REVISIONS | | | | | | SHEET NO. |
|---|---|---|---|---|---|---|
| NO. | BY: | DATE: | NO. | BY: | DATE: | S-9 |
| 1 | | | 3 | | | TOTAL SHEETS |
| 2 | | | 4 | | | 16 |

DRAWN BY: S.D. COOPER DATE: 5-16
CHECKED BY: B.S. COX DATE: 5-16
DESIGN ENGINEER OF RECORD: B.S. COX DATE: 5-16

5/18/2016 12:39:08 PM G:\Projects\2014\BD-5107AC (Guilford 229)\Structures\Drawings\Final\BD-5107AC_superstructure.dgn

DocuSign Envelope ID: 1DC6E195-B4BB-4A7E-9ED0-E5C60B3EA188

## NOTES:

STIRRUPS IN CAP MAY BE SHIFTED AS NECESSARY TO CLEAR DOWELS.

THE CONCRETE IN THE SHADED AREA OF THE WING SHALL BE POURED AFTER THE VERTICAL CONCRETE BARRIER RAIL IS CAST IF SLIP FORMING IS USED.

FOR PILE SPLICE DETAILS, SEE SHEET 4 OF 4.

FOR WING DETAILS, SEE SHEET 3 OF 4.

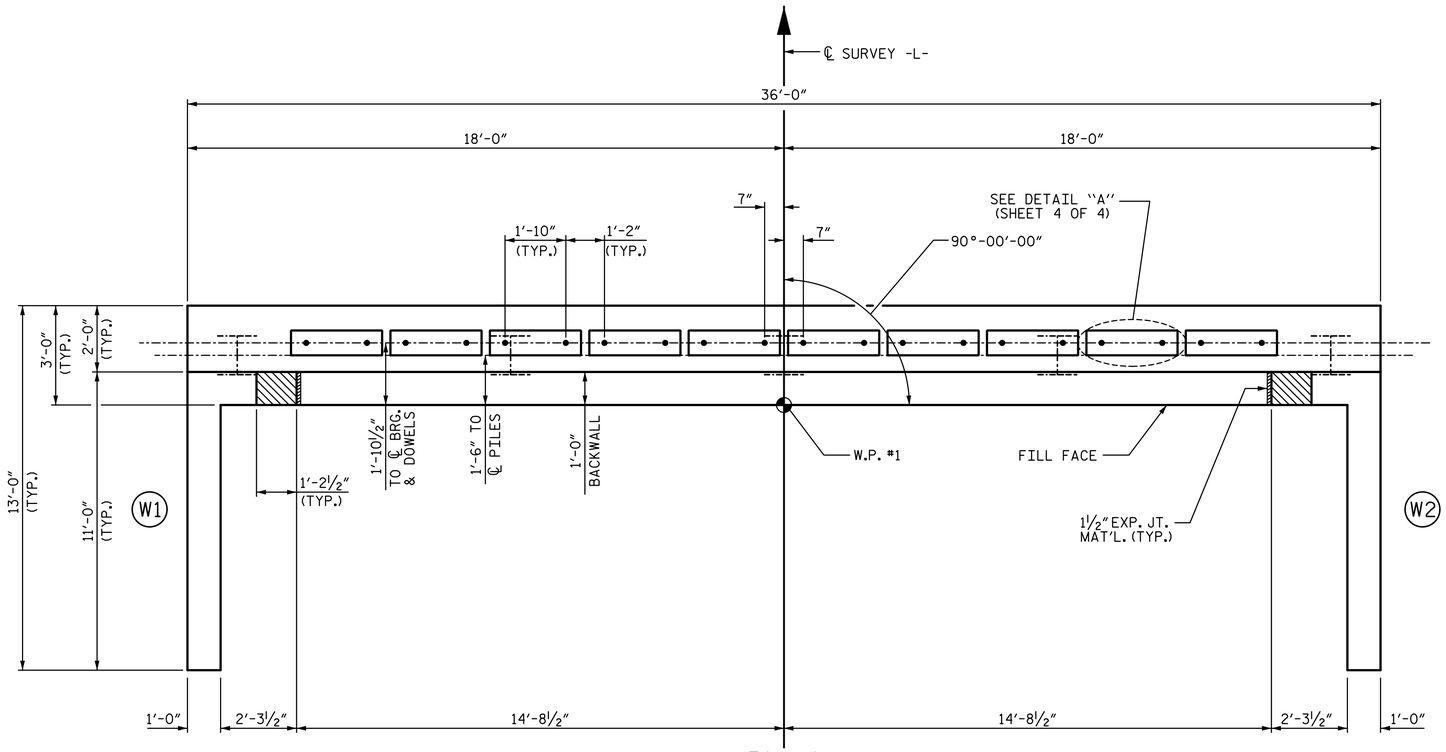


## PLAN

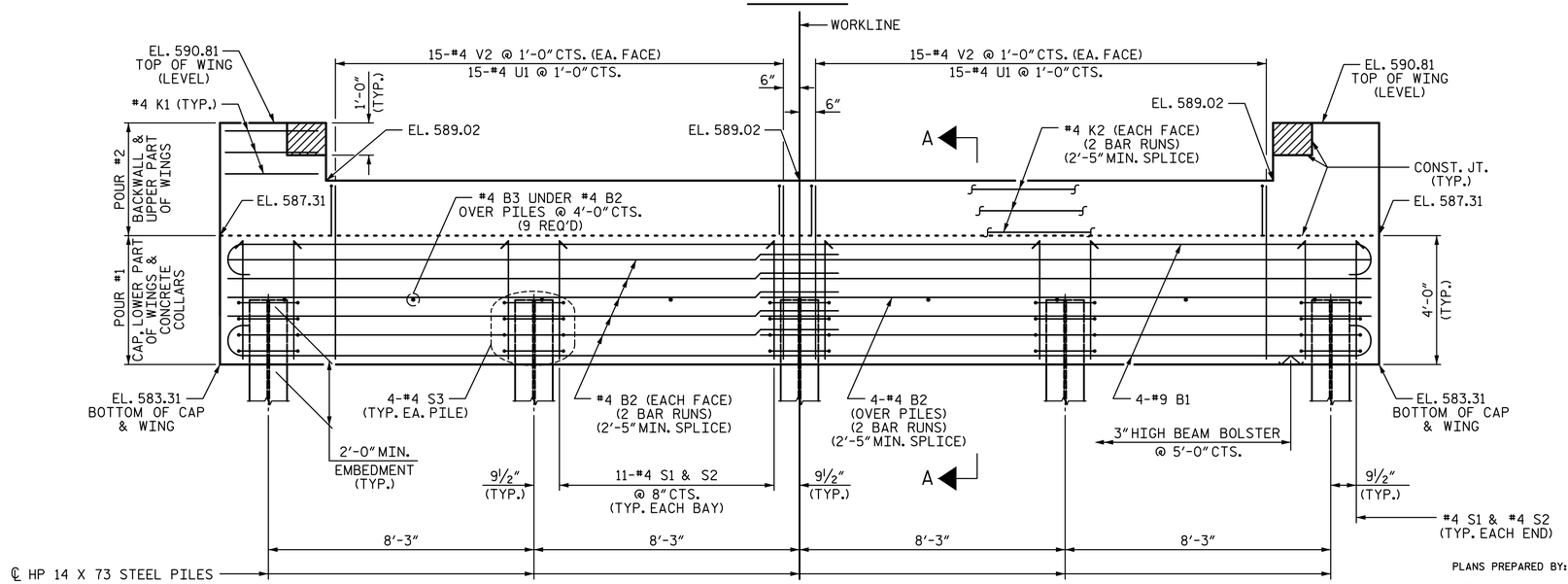


## ELEVATION

WINGS NOT SHOWN FOR CLARITY.
FOR SECTION A-A, SEE SHEET 4 OF 4.
CONCRETE COLLARS FOR STEEL PILES NOT SHOWN IN PLAN AND ELEVATION VIEWS FOR CLARITY.
SEE "CORROSION PROTECTION FOR STEEL PILES DETAIL", SHEET 4 OF 4.

PROJECT NO. 17BP.7.R.105
GUILFORD COUNTY
STATION: 14+05.00 -L-

SHEET 1 OF 4

STATE OF NORTH CAROLINA
DEPARTMENT OF TRANSPORTATION
RALEIGH

SUBSTRUCTURE

END BENT 1

PLANS PREPARED BY:

SIMPSON ENGINEERS & ASSOCIATES
5640 Dillard Drive
Suite 200
Cary, NC 27518
(919) 852-0468
(919) 852-0598 (Fax)
www.simpsonengr.com
LICENSURE NO. C-2521

NORTH CAROLINA PROFESSIONAL SEAL ENGINEER BETSY S. COX
5/18/2016

DOCUMENT NOT CONSIDERED FINAL UNLESS ALL SIGNATURES COMPLETED

| REVISIONS | | | | | | |
|---|---|---|---|---|---|---|
| NO. | BY: | DATE: | NO. | BY: | DATE: | |
| 1 | | | 3 | | | |
| 2 | | | 4 | | | |

SHEET NO. S-10
TOTAL SHEETS 16

DRAWN BY: S.D. COOPER DATE: 5-16
CHECKED BY: B.S. COX DATE: 5-16
DESIGN ENGINEER OF RECORD: B.S. COX DATE: 5-16

5/18/2016 12:39:09 PM G:\Projects\2014\BD-5107AC (Guilford 229)\Structures\Drawings\Final\BD-5107AC_endbents.dgn

DocuSign Envelope ID: 1DC6E195-B4BB-4A7E-9ED0-E5C60B3EA188

## NOTES:

STIRRUPS IN CAP MAY BE SHIFTED AS NECESSARY TO CLEAR DOWELS.

THE CONCRETE IN THE SHADED AREA OF THE WING SHALL BE POURED AFTER THE VERTICAL CONCRETE BARRIER RAIL IS CAST IF SLIP FORMING IS USED.

FOR PILE SPLICE DETAILS, SEE SHEET 4 OF 4.

FOR WING DETAILS, SEE SHEET 3 OF 4.

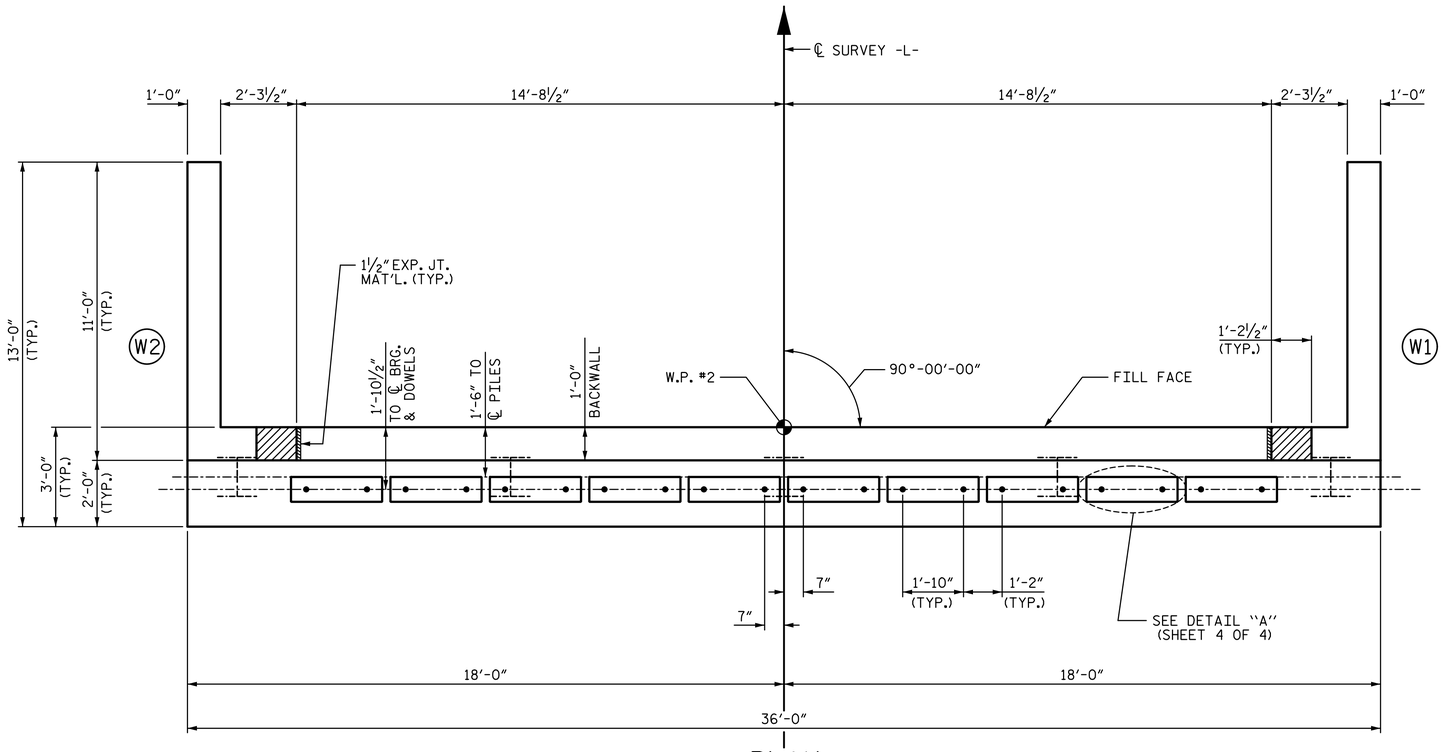


## PLAN

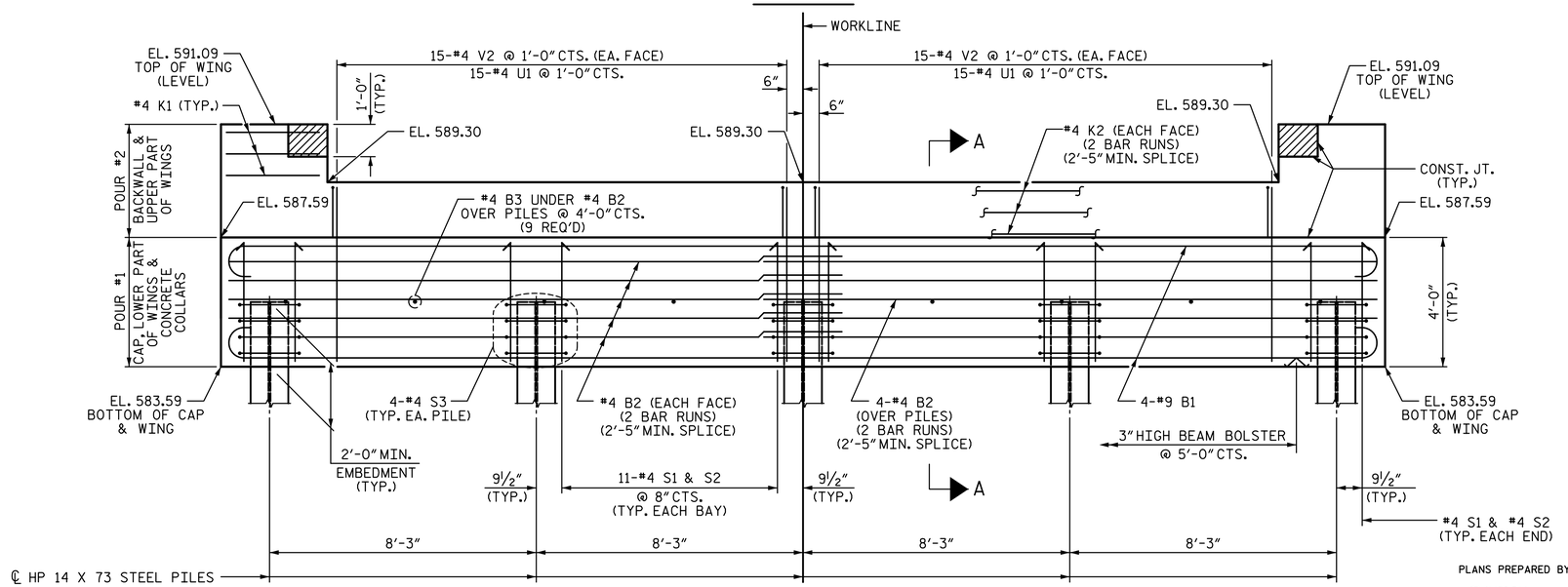


## ELEVATION

WINGS NOT SHOWN FOR CLARITY.
FOR SECTION A-A, SEE SHEET 4 OF 4.
CONCRETE COLLARS FOR STEEL PILES NOT SHOWN IN PLAN AND ELEVATION VIEWS FOR CLARITY.
SEE "CORROSION PROTECTION FOR STEEL PILES DETAIL", SHEET 4 OF 4.

PROJECT NO. 17BP.7.R.105
GUILFORD COUNTY
STATION: 14+05.00 -L-

SHEET 2 OF 4

STATE OF NORTH CAROLINA
DEPARTMENT OF TRANSPORTATION
RALEIGH

SUBSTRUCTURE

END BENT 2

PLANS PREPARED BY:
SIMPSON ENGINEERS & ASSOCIATES
5640 Dillard Drive
Suite 200
Cary, NC 27518
(919) 852-0468
(919) 852-0598 (Fax)
www.simpsonengr.com
LICENSURE NO. C-2521

NORTH CAROLINA PROFESSIONAL SEAL ENGINEER BETSY S. COX 042168
5/18/2016

DOCUMENT NOT CONSIDERED FINAL UNLESS ALL SIGNATURES COMPLETED

| REVISIONS | | | | | | |
|---|---|---|---|---|---|---|
| NO. | BY: | DATE: | NO. | BY: | DATE: | |
| 1 | | | 3 | | | |
| 2 | | | 4 | | | |

SHEET NO. S-11
TOTAL SHEETS 16

DRAWN BY: S.D. COOPER DATE: 5-16
CHECKED BY: B.S. COX DATE: 5-16
DESIGN ENGINEER OF RECORD: B.S. COX DATE: 5-16

5/18/2016 12:39:09 PM G:\Projects\2014\BD-5107AC (Guilford 229)\Structures\Drawings\Final\BD-5107AC_endbents.dgn

DocuSign Envelope ID: 1DC6E195-B4BB-4A7E-9ED0-E5C60B3EA188

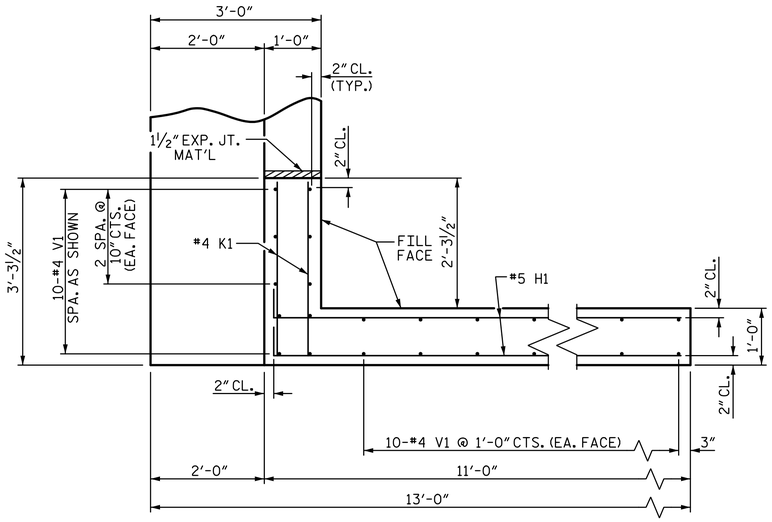


PLAN OF WING (W1)

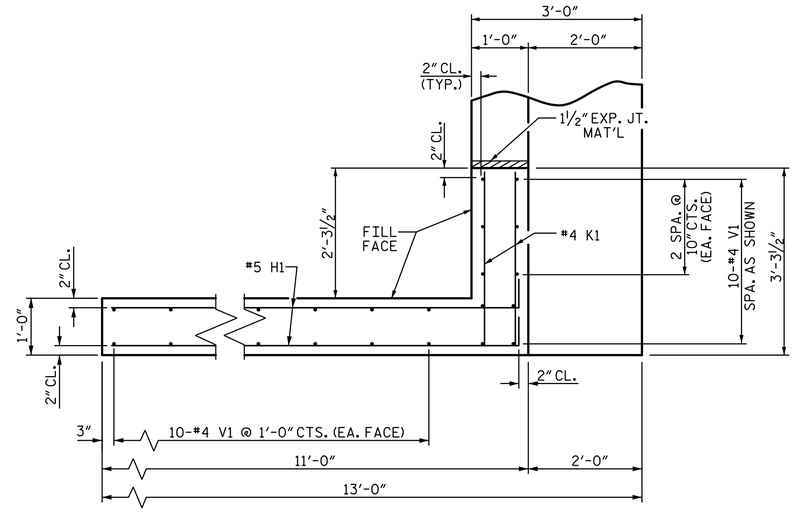


PLAN OF WING (W2)

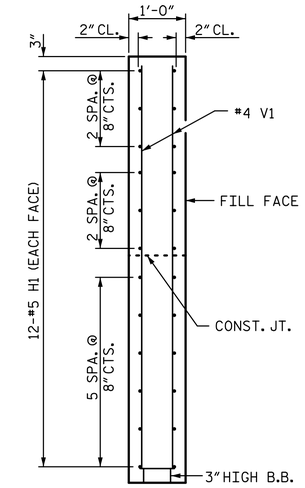


SECTION X-X

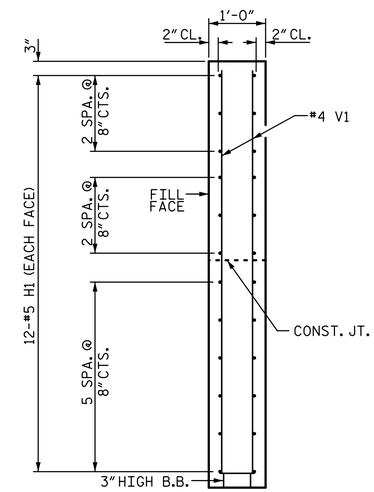


SECTION Y-Y

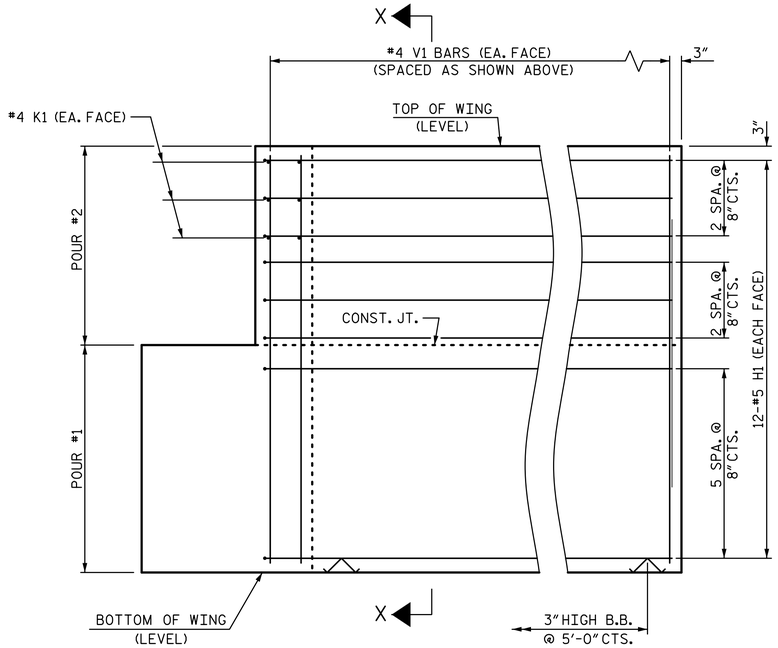


ELEVATION OF WING (W1)

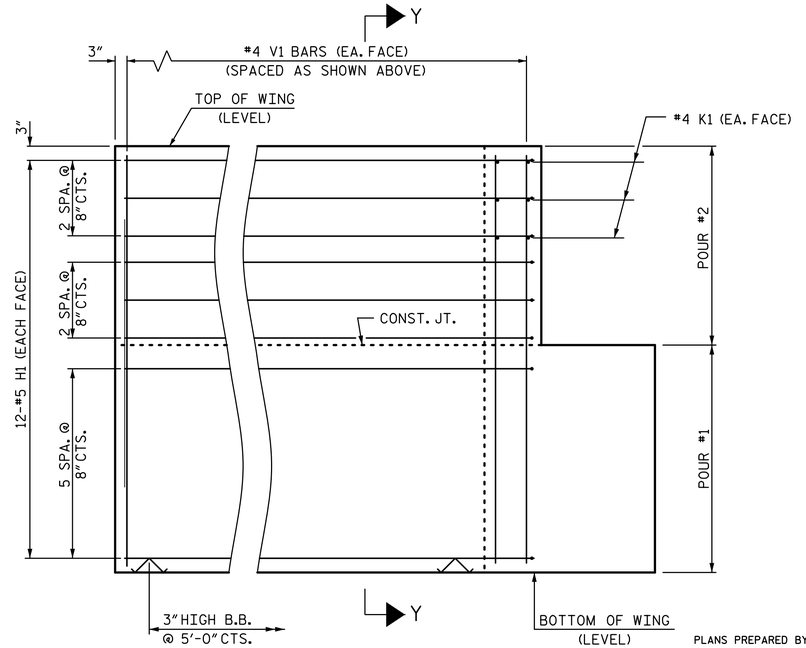


ELEVATION OF WING (W2)

WING DETAILS

PROJECT NO. 17BP.7.R.105
GUILFORD COUNTY
STATION: 14+05.00 -L-

SHEET 3 OF 4

STATE OF NORTH CAROLINA
DEPARTMENT OF TRANSPORTATION
RALEIGH
SUBSTRUCTURE

END BENT
WING DETAILS

PLANS PREPARED BY:
SIMPSON ENGINEERS & ASSOCIATES
5640 Dillard Drive
Suite 200
Cary, NC 27518
(919) 852-0468
(919) 852-0598 (Fax)
www.simpsonengr.com
LICENSURE NO. C-2521

NORTH CAROLINA PROFESSIONAL SEAL 042268 ENGINEER BETSY S. COX
5/18/2016

DOCUMENT NOT CONSIDERED FINAL UNLESS ALL SIGNATURES COMPLETED

| REVISIONS | | | | | | | SHEET NO. |
|---|---|---|---|---|---|---|---|
| NO. | BY: | DATE: | NO. | BY: | DATE: | | S-12 |
| 1 | | | 3 | | | | TOTAL SHEETS |
| 2 | | | 4 | | | | 16 |

| | | | |
|---|---|---|---|
| DRAWN BY: | S.D. COOPER | DATE: | 5-16 |
| CHECKED BY: | B.S. COX | DATE: | 5-16 |
| DESIGN ENGINEER OF RECORD: | B.S. COX | DATE: | 5-16 |

5/18/2016 12:39:09 PM G:\Projects\2014\BD-5107AC (Guilford 229)\Structures\Drawings\Final\BD-5107AC_endbents.dgn

DocuSign Envelope ID: 1DC6E195-B4BB-4A7E-9ED0-E5C60B3EA188

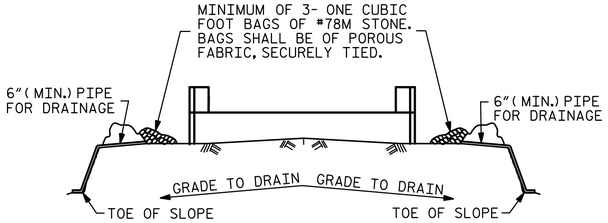


BAGGED STONE AND PIPE SHALL BE PLACED IMMEDIATELY AFTER COMPLETION OF END BENT EXCAVATION. PIPE MAY BE EITHER CONCRETE, CORRUGATED STEEL, CORRUGATED ALUMINUM ALLOY, OR CORRUGATED PLASTIC. PERFORATED PIPE WILL NOT BE ALLOWED.

BAGGED STONE SHALL REMAIN IN PLACE UNTIL THE ENGINEER DIRECTS THAT IT BE REMOVED. THE CONTRACTOR SHALL REMOVE AND DISPOSE OF SILT ACCUMULATIONS AT BAGGED STONE WHEN SO DIRECTED BY THE ENGINEER. BAGS SHALL BE REMOVED AND REPLACED WHENEVER THE ENGINEER DETERMINES THAT THEY HAVE DETERIORATED AND LOST THEIR EFFECTIVENESS.

NO SEPARATE PAYMENT WILL BE MADE FOR THIS WORK AND THE ENTIRE COST OF THIS WORK SHALL BE INCLUDED IN THE UNIT CONTRACT PRICE BID FOR THE SEVERAL PAY ITEMS.

## TEMPORARY DRAINAGE AT END BENT

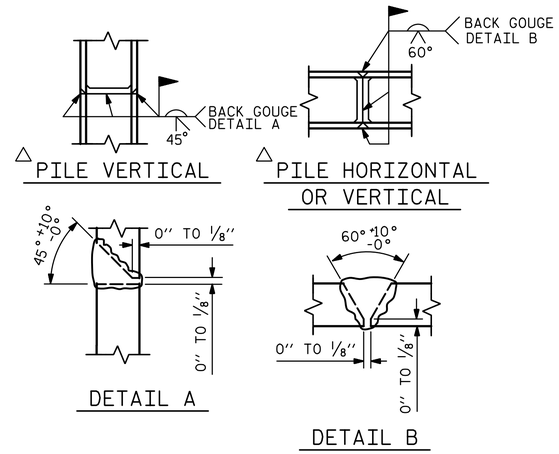


△ POSITION OF PILE DURING WELDING.

## PILE SPLICE DEAILS

## BAR TYPES

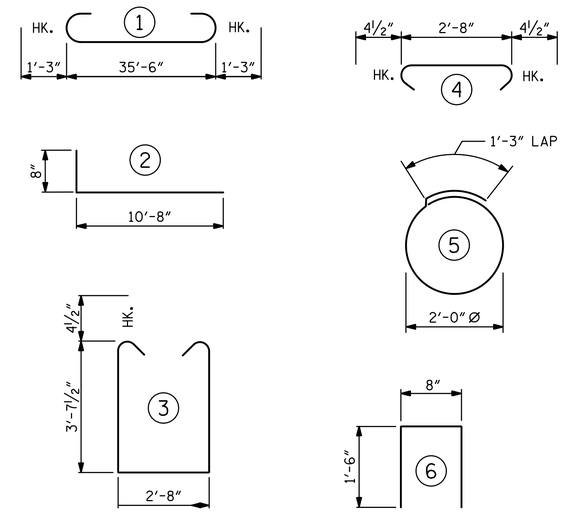


ALL BAR DIMENSIONS ARE OUT TO OUT.

| END BENT 1 | END BENT 2 |
|---|---|
| HP 14 X 73 STEEL PILES | HP 14 X 73 STEEL PILES |
| NO: 5 LF= 60 | NO: 5 LF= 60 |
| PILE EXCAVATION IN SOIL = 30 LF | PILE EXCAVATION IN SOIL = 30 LF |
| PILE EXCAVATION NOT IN SOIL = 20 LF | PILE EXCAVATION NOT IN SOIL = 20 LF |

## BILL OF MATERIAL
### FOR ONE END BENT

| BAR | NO. | SIZE | TYPE | LENGTH | WEIGHT |
|---|---|---|---|---|---|
| B1 | 8 | #9 | 1 | 38'-0" | 1034 |
| B2 | 28 | #4 | STR | 19'-1" | 357 |
| B3 | 9 | #4 | STR | 2'-5" | 15 |
| D1 | 20 | #8 | STR | 2'-3" | 120 |
| H1 | 48 | #5 | 2 | 11'-4" | 567 |
| K1 | 12 | #4 | STR | 2'-11" | 23 |
| K2 | 12 | #4 | STR | 19'-1" | 153 |
| S1 | 46 | #4 | 3 | 10'-8" | 328 |
| S2 | 46 | #4 | 4 | 3'-5" | 105 |
| S3 | 20 | #4 | 5 | 7'-6" | 100 |
| U1 | 30 | #4 | 6 | 3'-8" | 73 |
| V1 | 60 | #4 | STR | 7'-2" | 287 |
| V2 | 60 | #4 | STR | 5'-4" | 214 |

REINFORCING STEEL (FOR ONE END BENT) 3376 LB

CLASS A CONCRETE BREAKDOWN (FOR ONE END BENT)

POUR #1 CAP, LOWER PART OF WINGS & COLLARS 20.0 CY

POUR #2 BACKWALL & UPPER PART OF WINGS 5.3 CY

TOTAL CLASS A CONCRETE 25.3 CY

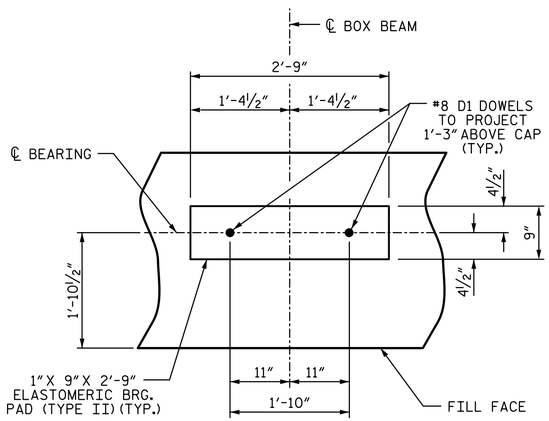


## DETAIL "A"

(END BENT 1 SHOWN, END BENT 2 SIMILAR BY ROTATION)

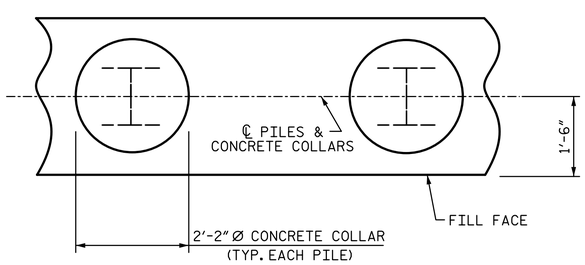


PLAN

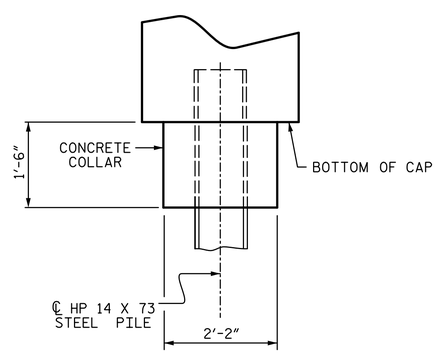


ELEVATION

## CORROSION PROTECTION FOR STEEL PILES DETAIL

(END BENT 1 SHOWN, END BENT 2 SIMILAR BY ROTATION)

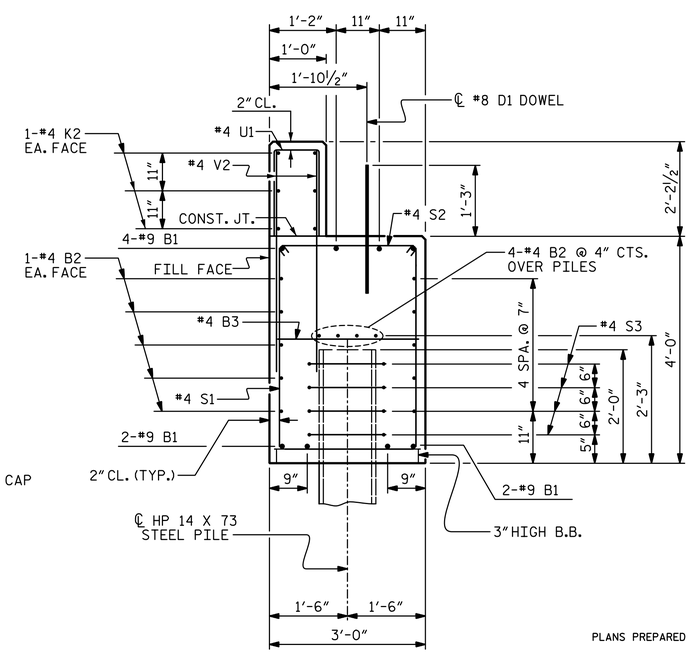


## SECTION A-A

(CONCRETE COLLAR NOT SHOWN FOR CLARITY. SEE "CORROSION PROTECTION FOR STEEL PILES DETAIL.")

PROJECT NO. 17BP.7.R.105

GUILFORD COUNTY

STATION: 14+05.00 -L-

SHEET 4 OF 4

STATE OF NORTH CAROLINA
DEPARTMENT OF TRANSPORTATION
RALEIGH

SUBSTRUCTURE

# END BENT 1 & 2 DETAILS

PLANS PREPARED BY:

SIMPSON ENGINEERS & ASSOCIATES
5640 Dillard Drive
Suite 200
Cary, NC 27518
(919) 852-0468
(919) 852-0598 (Fax)
www.simpsonengr.com
LICENSURE NO. C-2521

NORTH CAROLINA PROFESSIONAL SEAL 14268 ENGINEER BETSY S. COX
5/18/2016

DOCUMENT NOT CONSIDERED FINAL UNLESS ALL SIGNATURES COMPLETED

| REVISIONS | | | | | | | SHEET NO. |
|---|---|---|---|---|---|---|---|
| NO. | BY: | DATE: | NO. | BY: | DATE: | | S-13 |
| 1 | | | 3 | | | | TOTAL SHEETS |
| 2 | | | 4 | | | | 16 |

| | | | |
|---|---|---|---|
| DRAWN BY: | S.D. COOPER | DATE: | 5-16 |
| CHECKED BY: | B.S. COX | DATE: | 5-16 |
| DESIGN ENGINEER OF RECORD: | B.S. COX | DATE: | 5-16 |

5/18/2016 12:39:09 PM G:\Projects\2014\BD-5107AC (Guilford 229)\Structures\Drawings\Final\BD-5107AC_endbents.dgn

DocuSign Envelope ID: 1DC6E195-B4BB-4A7E-9ED0-E5C60B3EA188

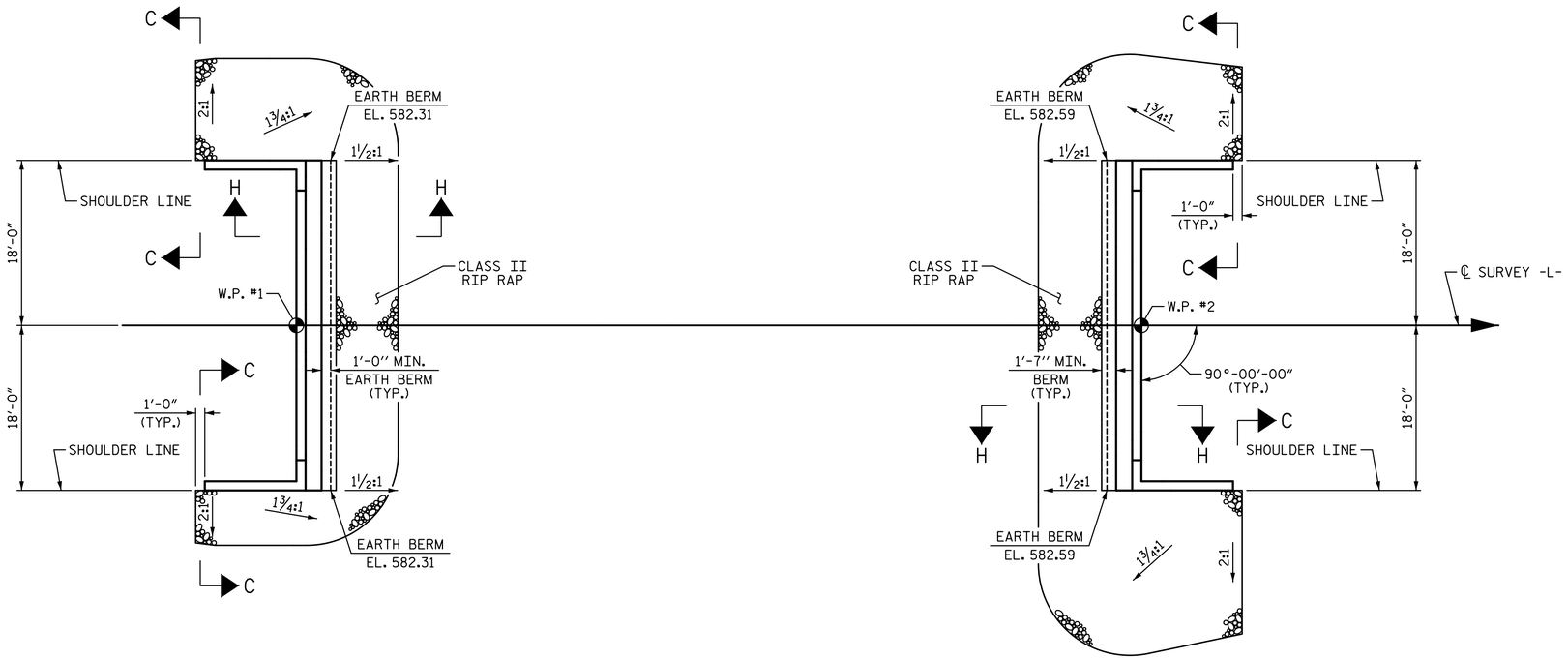


@ END BENT 1

@ END BENT 2

## PLAN OF RIP RAP

| ESTIMATED QUANTITIES | | |
|---|---|---|
| BRIDGE @ STA. 14+05.00 -L- | RIP RAP CLASS II (2'-0" THICK) | GEOTEXTILE FOR DRAINAGE |
| | TONS | SQUARE YARDS |
| END BENT 1 | 95 | 105 |
| END BENT 2 | 100 | 115 |

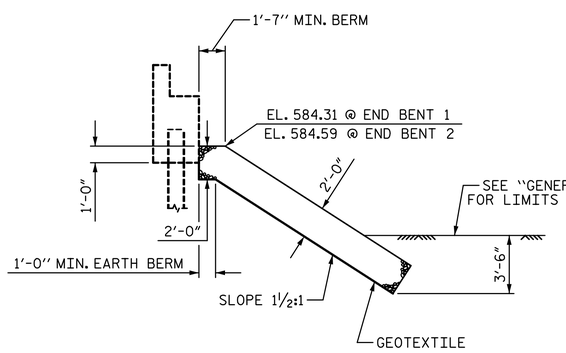


## ℄ SECTION BERM RIP RAPPED

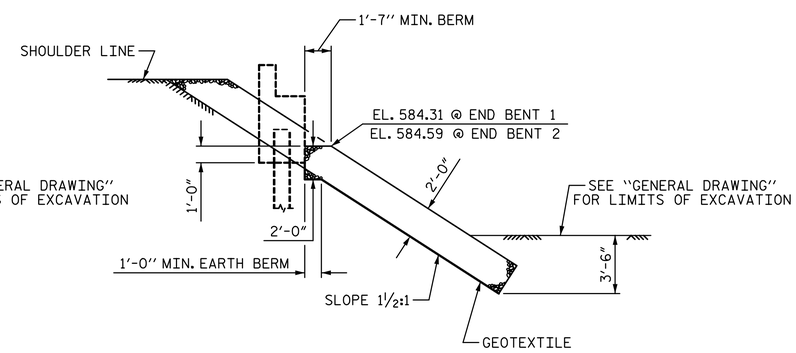


## SECTION H-H

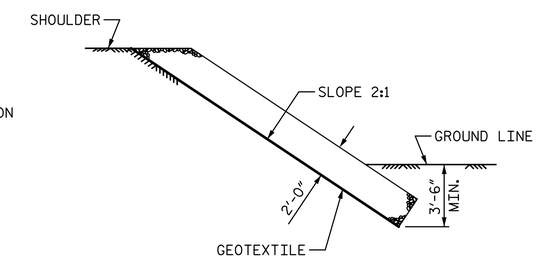


## SECTION C-C

PROJECT NO. 17BP.7.R.105
GUILFORD COUNTY
STATION: 14+05.00 -L-

STATE OF NORTH CAROLINA
DEPARTMENT OF TRANSPORTATION
RALEIGH

# RIP RAP DETAILS

PLANS PREPARED BY:

SIMPSON ENGINEERS & ASSOCIATES
5640 Dillard Drive
Suite 200
Cary, NC 27518
(919) 852-0468
(919) 852-0598 (Fax)
www.simpsonengr.com
LICENSURE NO. C-2521

NORTH CAROLINA PROFESSIONAL SEAL 11268 ENGINEER BETSY S. COX
5/18/2016

DOCUMENT NOT CONSIDERED FINAL UNLESS ALL SIGNATURES COMPLETED

| REVISIONS | | | | | | |
|---|---|---|---|---|---|---|
| NO. | BY: | DATE: | NO. | BY: | DATE: | |
| 1 | | | 3 | | | |
| 2 | | | 4 | | | |

SHEET NO. S-14
TOTAL SHEETS 16

DRAWN BY: T. BANKOVICH DATE: 5-16
CHECKED BY: B.S. COX DATE: 5-16
DESIGN ENGINEER OF RECORD: B.S. COX DATE: 5-16

5/18/2016 12:39:10 PM G:\Projects\2014\BD-5107AC (Guilford 229)\Structures\Drawings\Final\BD-5107AC_sd_rr.dgn

DocuSign Envelope ID: 1DC6E195-B4BB-4A7E-9ED0-E5C60B3EA188

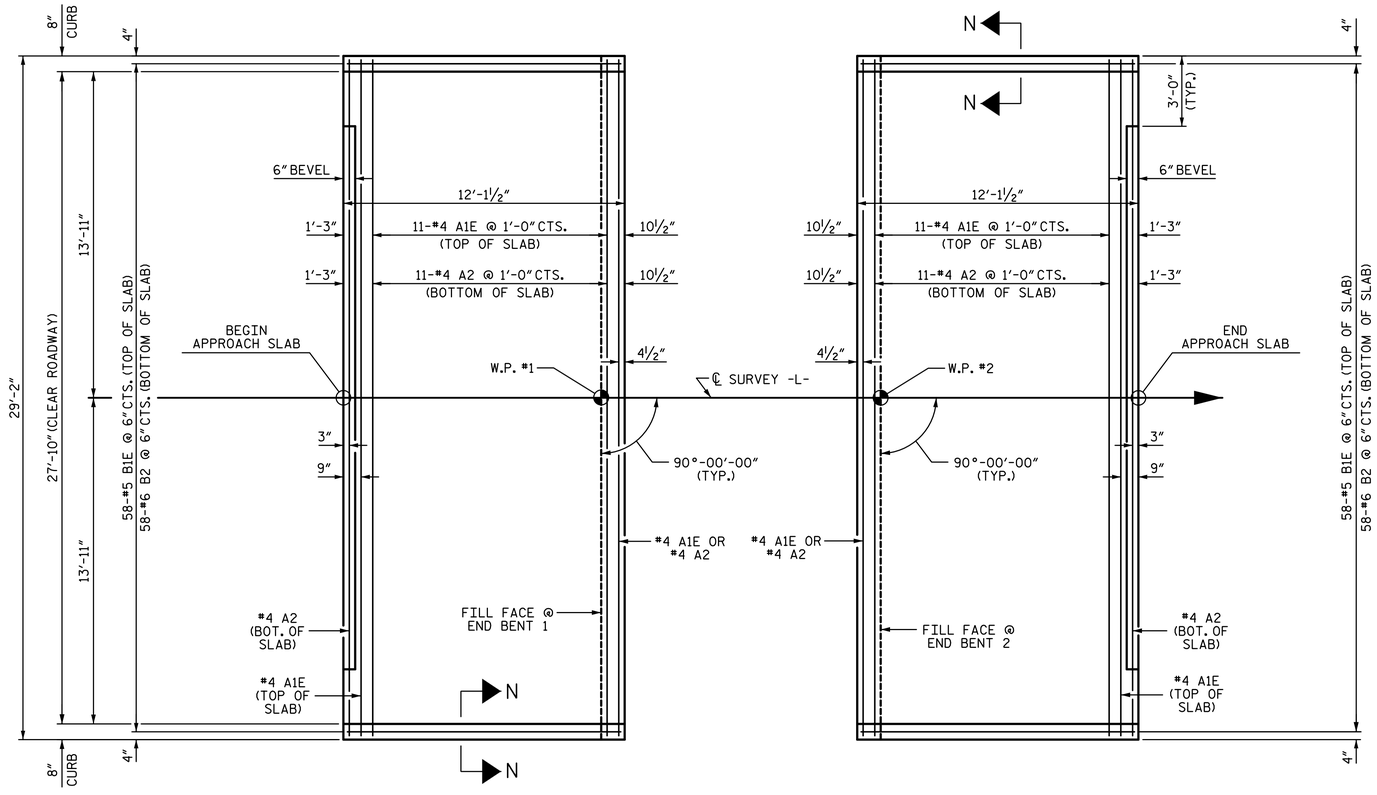


PLAN @ END BENT 1

PLAN @ END BENT 2

DIMENSIONS SHOWN ARE TYPICAL FOR BOTH APPROACH SLABS

## NOTES:

FOR BRIDGE APPROACH FILL INCLUDING GEOTEXTILE, 4" Ø DRAINAGE PIPE, AND #78M STONE BACKFILL, SEE ROADWAY PLANS.

GEOTEXTILE SHALL BE TYPE 1 IN ACCORDANCE WITH THE STANDARD SPECIFICATIONS SECTION 1056.

#78M STONE BACKFILL (CLASS V SELECT MATERIAL) SHALL BE IN ACCORDANCE WITH STANDARD SPECIFICATIONS SECTION 1016.

#78M STONE BACKFILL IS TO BE CONTINUOUS ALONG FILL FACE OF BACKWALL FROM OUTSIDE EDGE TO OUTSIDE EDGE OF APPROACH SLAB.

FOR THE 4" Ø DRAINAGE PIPE OUTLET(S), SEE ROADWAY STANDARD DRAWINGS.

AREA BETWEEN THE WINGWALL AND APPROACH SLAB SHALL BE GRADED TO DRAIN THE WATER AWAY FROM THE FILL FACE OF THE BRIDGE AND SHALL BE PAVED. SEE ROADWAY PLANS.

APPROACH SLAB GROOVING IS NOT REQUIRED.

## BILL OF MATERIAL

### APPROACH SLAB AT EB 1

| BAR | NO. | SIZE | TYPE | LENGTH | WEIGHT |
|---|---|---|---|---|---|
| A1E | 13 | #4 | STR | 28'-10" | 250 |
| A2 | 13 | #4 | STR | 28'-10" | 250 |
| | | | | | |
| B1E | 58 | #5 | STR | 11'-2" | 676 |
| B2 | 58 | #6 | STR | 11'-8" | 1016 |
| | | | | | |
| REINFORCING STEEL | | | | LB | 1266 |
| EPOXY COATED REINFORCING STEEL | | | | LB | 926 |
| | | | | | |
| CLASS AA CONCRETE | | | | CY | 15.6 |

### APPROACH SLAB AT EB 2

| BAR | NO. | SIZE | TYPE | LENGTH | WEIGHT |
|---|---|---|---|---|---|
| A1E | 13 | #4 | STR | 28'-10" | 250 |
| A2 | 13 | #4 | STR | 28'-10" | 250 |
| | | | | | |
| B1E | 58 | #5 | STR | 11'-2" | 676 |
| B2 | 58 | #6 | STR | 11'-8" | 1016 |
| | | | | | |
| REINFORCING STEEL | | | | LB | 1266 |
| EPOXY COATED REINFORCING STEEL | | | | LB | 926 |
| | | | | | |
| CLASS AA CONCRETE | | | | CY | 15.6 |

"E" INDICATES EPOXY COATED REINFORCING STEEL

## SPLICE CHART

| BAR SIZE | EPOXY COATED | UNCOATED |
|---|---|---|
| #4 | 2'-0" | 1'-9" |
| #5 | 2'-6" | 2'-2" |
| #6 | 3'-10" | 2'-7" |

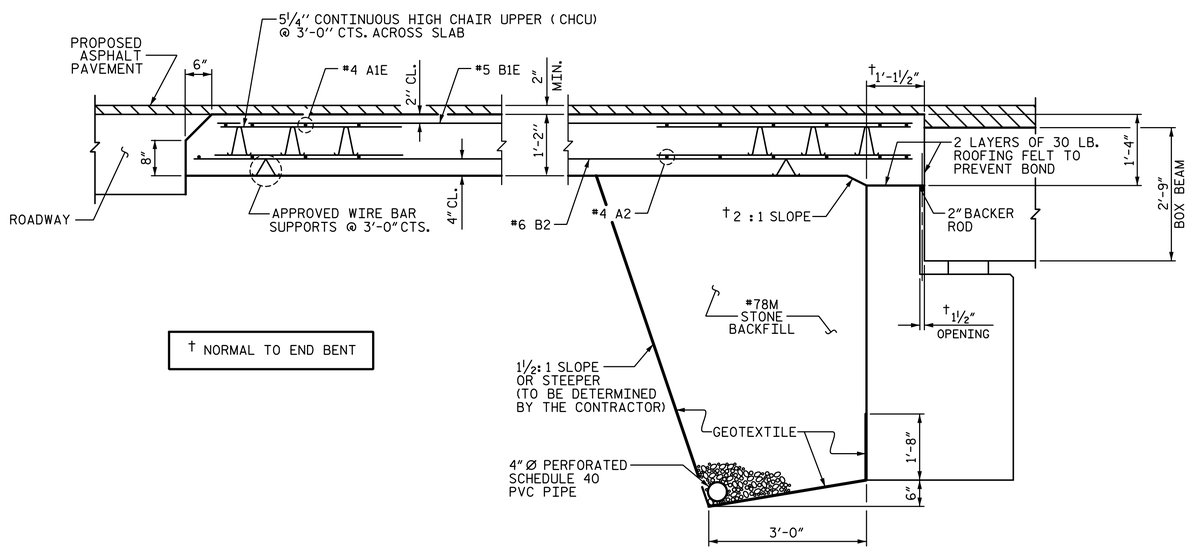


† NORMAL TO END BENT

SECTION THRU SLAB

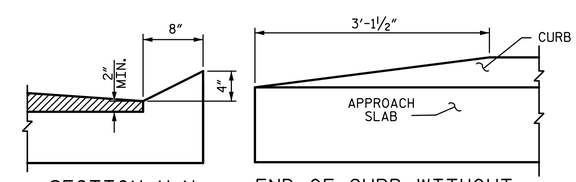


SECTION N-N

END OF CURB WITHOUT SHOULDER BERM GUTTER

CURB DETAILS

PROJECT NO. 17BP.7.R.105

GUILFORD COUNTY

STATION: 14+05.00 -L-

SHEET 1 OF 2

STATE OF NORTH CAROLINA
DEPARTMENT OF TRANSPORTATION
RALEIGH

# BRIDGE APPROACH SLAB FOR PRESTRESSED CONCRETE BOX BEAM UNIT

(SUB-REGIONAL TIER - 90° SKEW

PLANS PREPARED BY:

SIMPSON ENGINEERS & ASSOCIATES
5640 Dillard Drive
Suite 200
Cary, NC 27518
(919) 852-0468
(919) 852-0598 (Fax)
www.simpsonengr.com
LICENSURE NO. C-2521

NORTH CAROLINA PROFESSIONAL SEAL 11268 ENGINEER BETSY S. COX
5/18/2016

DOCUMENT NOT CONSIDERED FINAL UNLESS ALL SIGNATURES COMPLETED

| REVISIONS | | | | | | |
|---|---|---|---|---|---|---|
| NO. | BY: | DATE: | NO. | BY: | DATE: | |
| 1 | | | 3 | | | |
| 2 | | | 4 | | | |

SHEET NO. S-15

TOTAL SHEETS 16

DRAWN BY: T. BANKOVICH DATE: 5-16
CHECKED BY: B.S. COX DATE: 5-16
DESIGN ENGINEER OF RECORD: B.S. COX DATE: 5-16

5/18/2016 12:39:10 PM G:\Projects\2014\BD-5107AC (Guilford 229)\Structures\Drawings\Final\BD-5107AC_sd_as.dgn

DocuSign Envelope ID: 1DC6E195-B4BB-4A7E-9ED0-E5C60B3EA188

# STANDARD NOTES

## DESIGN DATA:

| | |
|---|---|
| SPECIFICATIONS | A.A.S.H.T.O. (CURRENT) |
| LIVE LOAD | SEE PLANS |
| IMPACT ALLOWANCE | SEE A.A.S.H.T.O. |
| STRESS IN EXTREME FIBER OF | |
| STRUCTURAL STEEL - AASHTO M270 GRADE 36 | 20,000 LBS. PER SQ. IN. |
| - AASHTO M270 GRADE 50W | 27,000 LBS. PER SQ. IN. |
| - AASHTO M270 GRADE 50 | 27,000 LBS. PER SQ. IN. |
| REINFORCING STEEL IN TENSION | |
| GRADE 60 | 24,000 LBS. PER SQ. IN. |
| CONCRETE IN COMPRESSION | 1,200 LBS. PER SQ. IN. |
| CONCRETE IN SHEAR | SEE A.A.S.H.T.O. |
| STRUCTURAL TIMBER - TREATED OR | |
| UNTREATED - EXTREME FIBER STRESS | 1,800 LBS. PER SQ. IN. |
| COMPRESSION PERPENDICULAR TO GRAIN OF TIMBER | 375 LBS. PER SQ. IN. |
| EQUIVALENT FLUID PRESSURE OF EARTH | 30 LBS. PER CU. FT. (MINIMUM) |

## MATERIAL AND WORKMANSHIP:

EXCEPT AS MAY OTHERWISE BE SPECIFIED ON PLANS OR IN THE SPECIAL PROVISIONS, ALL MATERIAL AND WORKMANSHIP SHALL BE IN ACCORDANCE WITH THE 2012 "STANDARD SPECIFICATIONS FOR ROADS AND STRUCTURES" OF THE N. C. DEPARTMENT OF TRANSPORTATION.

STEEL SHEET PILING FOR PERMANENT OR TEMPORARY APPLICATIONS SHALL BE HOT ROLLED.

## CONCRETE:

UNLESS OTHERWISE REQUIRED ON PLANS, CLASS A CONCRETE SHALL BE USED FOR ALL PORTIONS OF ALL STRUCTURES WITH THE EXCEPTION THAT: CLASS AA CONCRETE SHALL BE USED IN BRIDGE SUPERSTRUCTURES, ABUTMENT BACKWALLS, AND APPROACH SLABS; AND CLASS B CONCRETE SHALL BE USED FOR SLOPE PROTECTION AND RIP RAP.

## CONCRETE CHAMFERS:

UNLESS OTHERWISE NOTED ON THE PLANS, ALL EXPOSED CORNERS ON STRUCTURES SHALL BE CHAMFERED 3/4" WITH THE FOLLOWING EXCEPTIONS: TOP CORNERS OF CURBS MAY BE ROUNDED TO 1-1/2" RADIUS WHICH IS BUILT INTO CURB FORMS; CORNERS OF TRANSVERSE FLOOR EXPANSION JOINTS SHALL BE ROUNDED WITH A 1/4" FINISHING TOOL UNLESS OTHERWISE REQUIRED ON PLANS; AND CORNERS OF EXPANSION JOINTS IN THE ROADWAY FACES AND TOPS OF CURBS AND SIDEWALKS SHALL BE ROUNDED TO A 1/4" RADIUS WITH A FINISHING STONE OR TOOL UNLESS OTHERWISE REQUIRED ON PLANS.

## DOWELS:

DOWELS WHEN INDICATED ON PLANS AS FOR CULVERT EXTENSIONS, SHALL BE EMBEDDED AT LEAST 12" INTO THE OLD CONCRETE AND GROUTED INTO PLACE WITH 1:2 CEMENT MORTAR.

## ALLOWANCE FOR DEAD LOAD DEFLECTION, SETTLEMENT: ETC. IN CASTING SUPERSTRUCTURES:

BRIDGES SHALL BE BUILT ON THE GRADE OR VERTICAL CURVE SHOWN ON PLANS. SLABS, CURBS AND PARAPETS SHALL CONFORM TO THE GRADE OR CURVE.

ALL DIMENSIONS WHICH ARE GIVEN IN SECTION AND ARE AFFECTED BY DEAD LOAD DEFLECTIONS ARE DIMENSIONS AT CENTER LINE OF BEARING UNLESS OTHERWISE NOTED ON PLANS. IN SETTING FORMS FOR STEEL BEAM BRIDGES AND PRESTRESSED CONCRETE GIRDER BRIDGES, ADJUSTMENTS SHALL BE MADE DUE TO THE DEAD LOAD DEFLECTIONS FOR THE ELEVATIONS SHOWN. WHERE BLOCKS ARE SHOWN OVER BEAMS FOR BUILDING UP TO THE SLAB, THE VERTICAL DIMENSIONS OF THE BLOCKS SHALL BE ADJUSTED BETWEEN BEARINGS TO COMPENSATE FOR DEAD LOAD DEFLECTIONS, VERTICAL CURVE ORDINATE, AND ACTUAL BEAM CAMBER. WHERE BOTTOM OF SLAB IS IN LINE WITH BOTTOM OF TOP FLANGES, DEPTH OF SLAB BETWEEN BEARINGS SHALL BE ADJUSTED TO COMPENSATE FOR DEAD LOAD DEFLECTION, VERTICAL CURVE ORDINATE, AND ACTUAL BEAM CAMBER.

IN SETTING FALSEWORK AND FORMS FOR REINFORCED CONCRETE SPANS, AN ALLOWANCE SHALL BE MADE FOR DEAD LOAD DEFLECTIONS, SETTLEMENT OF FALSEWORK, AND PERMANENT CAMBER WHICH SHALL BE PROVIDED FOR IN ADDITION TO THE ELEVATIONS SHOWN. AFTER REMOVAL OF THE FALSEWORK, THE FINISHED STRUCTURES SHALL CONFORM TO THE PROFILE AND ELEVATIONS SHOWN ON THE PLANS AND CONSTRUCTION ELEVATIONS FURNISHED BY THE ENGINEER.

DETAILED DRAWINGS FOR FALSEWORK OR FORMS FOR BRIDGE SUPERSTRUCTURE AND ANY STRUCTURE OR PARTS OF A STRUCTURE AS NOTED ON THE PLANS SHALL BE SUBMITTED TO THE ENGINEER FOR APPROVAL BEFORE CONSTRUCTION OF THE FALSEWORK OR FORMS IS STARTED.

## REINFORCING STEEL:

ALL REINFORCING STEEL SHALL BE DEFORMED. DIMENSIONS RELATIVE TO PLACEMENT OF REINFORCING ARE TO CENTERS OF BARS UNLESS OTHERWISE INDICATED IN THE PLANS. DIMENSIONS ON BAR DETAILS ARE TO CENTERS OF BARS OR ARE OUT TO OUT AS INDICATED ON PLANS.

WIRE BAR SUPPORTS SHALL BE PROVIDED FOR REINFORCING STEEL WHERE INDICATED ON THE PLANS. WHEN BAR SUPPORT PIECES ARE PLACED IN CONTINUOUS LINES, THEY SHALL BE SO PLACED THAT THE ENDS OF THE SUPPORTING WIRES SHALL BE LAPPED TO LOCK LEGS ON ADJOINING PIECES.

## STRUCTURAL STEEL:

AT THE CONTRACTOR'S OPTION, HE MAY SUBSTITUTE 7/8" Ø SHEAR STUDS FOR THE 3/4" Ø STUDS SPECIFIED ON THE PLANS. THIS SUBSTITUTION SHALL BE MADE AT THE RATE OF 3 - 7/8" Ø STUDS FOR 4 - 3/4" Ø STUDS, AND STUD SPACING CHANGES SHALL BE MADE AS NECESSARY TO PROVIDE THE SAME EQUIVALENT NUMBER OF 7/8" Ø STUDS ALONG THE BEAM AS SHOWN FOR 3/4" Ø STUDS BASED ON THE RATIO OF 3 - 7/8" Ø STUDS FOR 4 - 3/4" Ø STUDS. STUDS OF THE LENGTH SPECIFIED ON THE PLANS MUST BE PROVIDED. THE MAXIMUM SPACING SHALL BE 2'-0".

EXCEPT AT THE INTERIOR SUPPORTS OF CONTINUOUS BEAMS WHERE THE COVER PLATE IS IN CONTACT WITH BEARING PLATE, THE CONTRACTOR MAY, AT HIS OPTION, SUBSTITUTE FOR THE COVER PLATES DESIGNATED ON THE PLANS COVER PLATES OF THE EQUIVALENT AREA PROVIDED THESE PLATES ARE AT LEAST 5/16" IN THICKNESS AND DO NOT EXCEED A WIDTH EQUAL TO THE FLANGE WIDTH LESS 2" OR A THICKNESS EQUAL TO 2 TIMES THE FLANGE THICKNESS. THE SIZE OF FILLET WELDS SHALL CONFORM TO THE REQUIREMENTS OF THE CURRENT ANSI/AASHTO/AWS "BRIDGE WELDING CODE". ELECTROSLAG WELDING WILL NOT BE PERMITTED.

WITH THE SOLE EXCEPTION OF EDGES AT SURFACES WHICH BEAR ON OTHER SURFACES, ALL SHARP EDGES AND ENDS OF SHAPES AND PLATES SHALL BE SLIGHTLY ROUNDED BY SUITABLE MEANS TO A RADIUS OF APPROXIMATELY 1/16 INCH OR EQUIVALENT FLAT SURFACE AT A SUITABLE ANGLE PRIOR TO PAINTING, GALVANIZING, OR METALLIZING.

## HANDRAILS AND POSTS:

METAL STANDARDS AND FACES OF THE CONCRETE END POSTS FOR THE METAL RAIL SHALL BE SET NORMAL TO THE GRADE OF THE CURB, UNLESS OTHERWISE SHOWN ON PLANS. THE METAL RAIL AND TOPS OF CONCRETE POSTS USED WITH THE ALUMINUM RAIL SHALL BE BUILT PARALLEL TO THE GRADE OF THE CURB.

METAL HANDRAILS SHALL BE IN ACCORDANCE WITH THE PLANS. RAILS SHALL BE AS MANUFACTURED FOR BRIDGE RAILING. CASTINGS SHALL BE OF A UNIFORM APPEARANCE. FINS AND OTHER DEFORMATIONS RESULTING FROM CASTING OR OTHERWISE SHALL BE REMOVED IN A MANNER SO THAT A UNIFORM COLORING OF THE COMPLETED CASTING SHALL BE OBTAINED. CASTINGS WITH DISCOLORATIONS OR OF NON-UNIFORM COLORING WILL NOT BE ACCEPTED. CERTIFIED MILL REPORTS ARE REQUIRED FOR METAL RAILS AND POSTS.

## SPECIAL NOTES:

GENERALLY, IN CASE OF DISCREPANCY, THIS STANDARD SHEET OF NOTES SHALL GOVERN OVER THE SPECIFICATIONS, BUT THE REMAINDER OF THE PLANS SHALL GOVERN OVER NOTES HEREON, AND SPECIAL PROVISIONS SHALL GOVERN OVER ALL. SEE SPECIFICATIONS ARTICLE 105-4.

5/18/2016 12:39:11 PM G:\Projects\2014\BD-5107AC (Guilford 229)\Structures\Drawings\Final\BD-5107AC_sd_sn.dgn

| | | | |
|---|---|---|---|
| DRAWN BY: | T. BANKOVICH | DATE: | 5-16 |
| CHECKED BY: | B.S. COX | DATE: | 5-16 |
| DESIGN ENGINEER OF RECORD: | B.S. COX | DATE: | 5-16 |

ENGLISH

JANUARY, 1990

DocuSign Envelope ID: 1DC6E195-B4BB-4A7E-9ED0-E5C60B3EA188

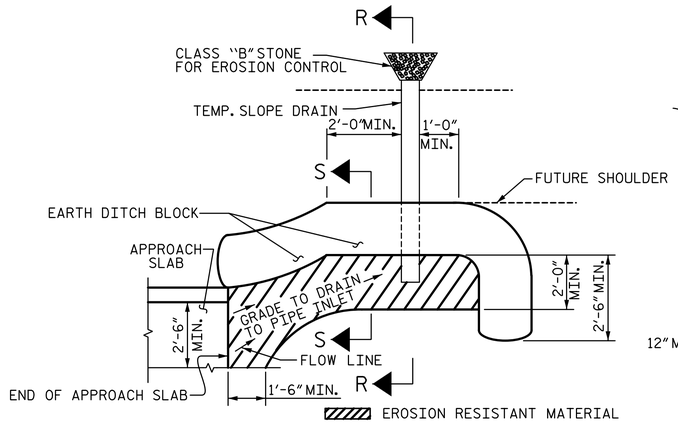


NOTE: IMMEDIATELY AFTER THE CONSTRUCTION OF THE APPROACH SLAB, THE CONTRACTOR SHALL PROVIDE TEMPORARY BERM AND SLOPE DRAIN. CONTRACTOR SHALL GRADE TO PIPE INLET AND PROVIDE EROSION RESISTANT MATERIAL AS SHOWN. THE EROSION RESISTANT MATERIAL SHALL BE EITHER 1) ASPHALT PLANT MIX, TYPE 1 OR TYPE 2, MIN. 2" DEPTH, 2) EROSION CONTROL MAT, OR 3) CONCRETE, AS DIRECTED BY THE ENGINEER. THE SLOPE DRAIN SHALL CONSIST OF A NON-PERFORATED TEMPORARY DRAINAGE PIPE, 12 INCHES IN DIAMETER.

PLAN VIEW

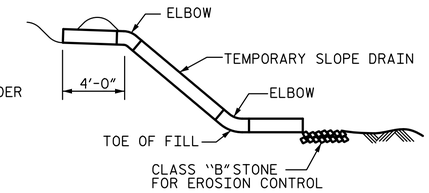


SECTION R-R

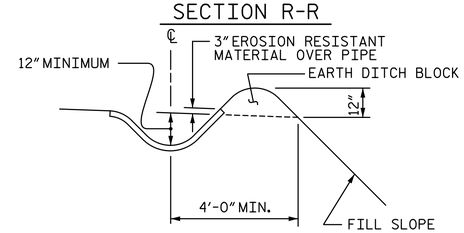


SECTION S-S

# TEMPORARY BERM AND SLOPE DRAIN DETAILS

(TO BE USED WHEN SHOULDER BERM GUTTER IS REQUIRED)

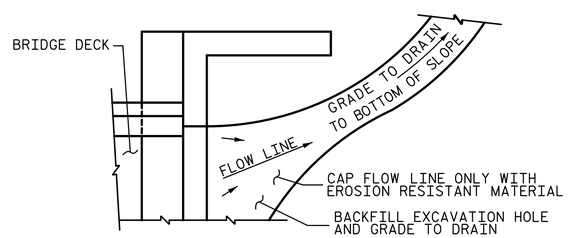


NOTE: IF THE APPROACH SLAB IS NOT CONSTRUCTED IMMEDIATELY AFTER THE BACKFILLING OF THE END BENT EXCAVATION, GRADE TO DRAIN TO THE BOTTOM OF THE SLOPE AND PROVIDE EROSION RESISTANT MATERIAL, SUCH AS FIBERGLASS ROVING OR AS DIRECTED BY THE ENGINEER TO PREVENT SOIL EROSION AND TO PROTECT THE AREA ADJACENT TO THE STRUCTURE. THE CONTRACTOR WILL BE REQUIRED TO REMOVE THESE MATERIALS PRIOR TO CONSTRUCTION OF THE APPROACH SLAB.

TEMPORARY DRAINAGE DETAIL

PROJECT NO. 17BP.7.R.105
GUILFORD COUNTY
STATION: 14+05.00 -L-

SHEET 2 OF 2

STATE OF NORTH CAROLINA
DEPARTMENT OF TRANSPORTATION
RALEIGH

BRIDGE APPROACH SLAB DETAILS

PLANS PREPARED BY:
SIMPSON ENGINEERS & ASSOCIATES
5640 Dillard Drive
Suite 200
Cary, NC 27518
(919) 852-0468
(919) 852-0598 (Fax)
www.simpsonengr.com
LICENSURE NO. C-2521

NORTH CAROLINA PROFESSIONAL SEAL 11268 ENGINEER BETSY S. COX
5/18/2016

DOCUMENT NOT CONSIDERED FINAL UNLESS ALL SIGNATURES COMPLETED

| REVISIONS | | | | | | SHEET NO. |
|---|---|---|---|---|---|---|
| NO. | BY: | DATE: | NO. | BY: | DATE: | S-16 |
| 1 | | | 3 | | | TOTAL SHEETS |
| 2 | | | 4 | | | 16 |

| | | | |
|---|---|---|---|
| DRAWN BY: | T. BANKOVICH | DATE: | 5-16 |
| CHECKED BY: | B.S. COX | DATE: | 5-16 |
| DESIGN ENGINEER OF RECORD: | B.S. COX | DATE: | 5-16 |

5/18/2016 12:39:10 PM G:\Projects\2014\BD-5107AC (Guilford 229)\Structures\Drawings\Final\BD-5107AC_sd_as.dgn