This electronic collection of documents is provided for the convenience of the user and is Not a Certified Document –

The documents contained herein were originally issued and sealed by the individuals whose names and license numbers appear on each page, on the dates appearing with their signature on that page.
This file or an individual page shall not be considered a certified document.

DocuSign Envelope ID: DCF9B4DF-EB16-4579-B1B6-B7CA12AEA2D2

TIP PROJECT: B-4958

CONTRACT:

STATE	STATE PROJECT REFERENCE NO.	SHEET NO.	TOTAL SHEETS
N.C.	B-4958	1	

STATE PROJECT NO.	F.A. PROJ. NO.	DESCRIPTION
40150.1.1	BRZ-2128 (002)	P.E.

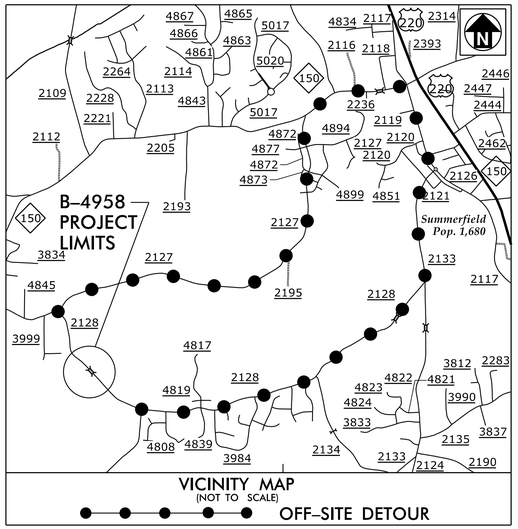

STATE OF NORTH CAROLINA
DIVISION OF HIGHWAYS

GUILFORD COUNTY

LOCATION: BRIDGE NO. 106 OVER REEDY FORK CREEK ON SR 2128 (BUNCH ROAD)

TYPE OF WORK: GRADING, PAVING, DRAINAGE AND STRUCTURE

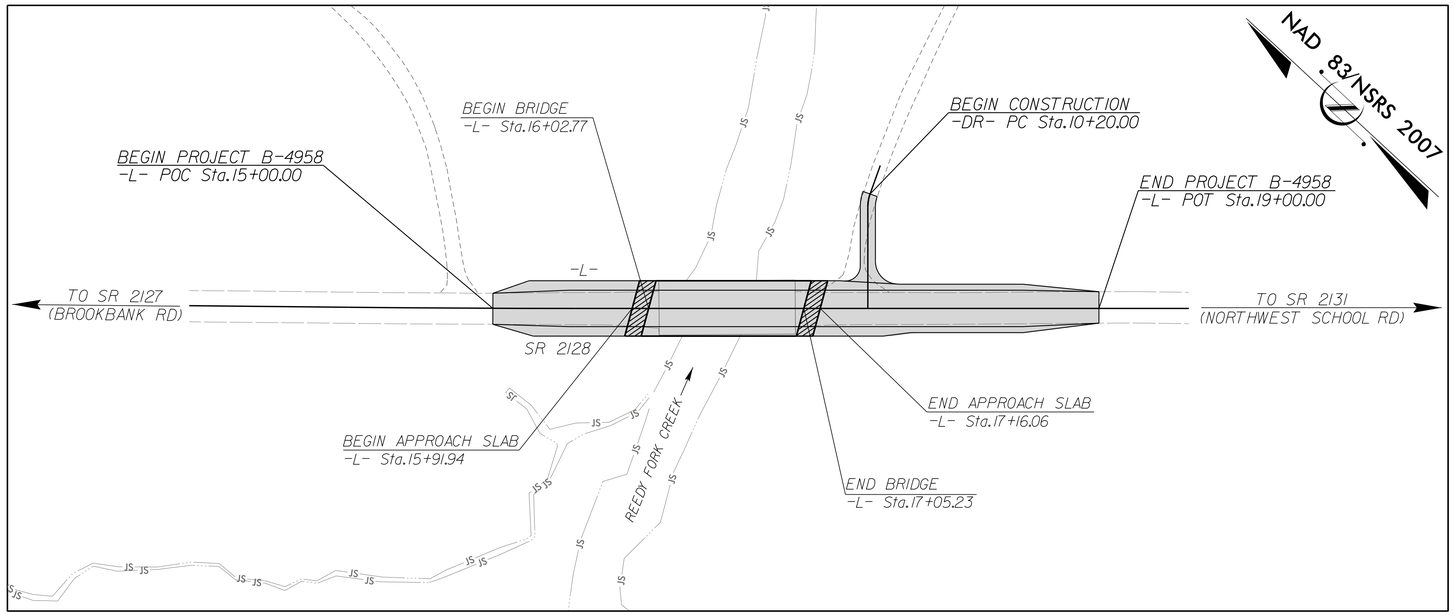

DOCUMENT NOT CONSIDERED FINAL UNLESS ALL SIGNATURES COMPLETED

DESIGN DATA

ADT 2016 = 4400
ADT 2040 = 6000
K = 12 %
D = 80 %
T = 3 %*
V = 45 MPH

* TTST =1% DUAL 2%

SUB REGIONAL TIER
LOCAL

PROJECT LENGTH

LENGTH ROADWAY TIP PROJECT = 0.057 MILES

LENGTH STRUCTURE TIP PROJECT = 0.019 MILES

TOTAL LENGTH TIP PROJECT = 0.076 MILES

Prepared in the Office of Mott MacDonald for

DIVISION 7

NORTH CAROLINA DEPARTMENT OF TRANSPORTATION

2018 STANDARD SPECIFICATIONS

LETTING DATE:

TIM JORDAN, PE
PROJECT ENGINEER

GALEN CAIL, PE
HYDRAULICS ENGINEER

NCDOT CONTACT: TIM POWERS, PE
DIVISION BRIDGE PROGRAM MANAGER

ROADWAY DESIGN ENGINEER

NORTH CAROLINA PROFESSIONAL SEAL 21102 ENGINEER JAMES TIMOTHY JORDAN

DocuSigned by: James Timothy Jordan 4/5/2018
SIGNATURE: P.E.

HYDRAULICS ENGINEER

NORTH CAROLINA PROFESSIONAL SEAL 022000 ENGINEER GALEN CAIL

DocuSigned by: W. Galen Cail 4/6/2018
06F097D90411ADD...
SIGNATURE: P.E.

PLANS PREPARED BY:

MOTT MACDONALD
PO Box 700
Fuquay-Varina, NC 27526
(919) 552-2253
(919) 552-2254 (Fax)
www.mottmac.com/americas

LICENSE NO. F-0669

4/5/2018
12:58:32 PM
R:\Roadway\Proj\B-4958_rdy_tsh.dgn
Ph156855

DocuSign Envelope ID: DCF9B4DF-EB16-4579-B1B6-B7CA12AEA2D2

PROJECT REFERENCE	SHEET NO.
B-4958 – GUILFORD 106	1A

ROADWAY DESIGN ENGINEER

NORTH CAROLINA PROFESSIONAL SEAL 21102 ENGINEER JAMES WHITFIELD JORDAN

DocuSigned by: James Whitfield Jordan 4/9/2018

MOTT MACDONALD I & E, LLC
LICENSE NO. F-0669

DOCUMENT NOT CONSIDERED FINAL UNLESS ALL SIGNATURES COMPLETED

Prepared in the Office of:

MOTT MACDONALD

PO Box 700
Fuquay-Varina, NC 27526
www.mottmac.com/americas

GENERAL NOTES

GENERAL NOTES: 2018 SPECIFICATIONS

EFFECTIVE: 01-16-18

GRADING AND SURFACING:

THE GRADE LINES SHOWN DENOTE THE FINISHED ELEVATION OF THE PROPOSED SURFACING AT GRADE POINTS SHOWN ON THE TYPICAL SECTIONS. GRADE LINES MAY BE ADJUSTED AT THEIR BEGINNING AND ENDING AND AT STRUCTURES AS DIRECTED BY THE ENGINEER IN ORDER TO SECURE A PROPER TIE-IN.

CLEARING:

CLEARING ON THIS PROJECT SHALL BE PERFORMED TO THE LIMITS ESTABLISHED BY METHOD II.

SUPERELEVATION:

ALL CURVES ON THIS PROJECT SHALL BE SUPERELEVATED IN ACCORDANCE WITH STD. NO. 225.04 USING THE RATE OF SUPERELEVATION AND RUNOFF SHOWN ON THE PLANS. SUPERELEVATION IS TO BE REVOLVED ABOUT THE GRADE POINTS SHOWN ON THE TYPICAL SECTIONS.

SHOULDER CONSTRUCTION:

ASPHALT, EARTH, AND CONCRETE SHOULDER CONSTRUCTION ON THE HIGH SIDE OF SUPERELEVATED CURVES SHALL BE IN ACCORDANCE WITH STD. NO. 560.01.

GUARDRAIL:

THE GUARDRAIL LOCATIONS SHOWN ON THE PLANS MAY BE ADJUSTED DURING CONSTRUCTION AS DIRECTED BY THE ENGINEER. THE CONTRACTOR SHOULD CONSULT WITH THE ENGINEER PRIOR TO ORDERING GUARDRAIL MATERIAL.

SUBSURFACE PLANS:

NO SUBSURFACE PLANS ARE AVAILABLE ON THIS PROJECT. THE CONTRACTOR SHOULD MAKE HIS OWN INVESTIGATION AS TO THE SUBSURFACE CONDITIONS.

END BENTS:

THE SURVEYOR SHALL CHECK THE STRUCTURE END BENT PLANS, DETAILS, AND CROSS-SECTIONS PRIOR TO SETTING OF THE SLOPE STAKES FOR THE EMBANKMENT OR EXCAVATION APPROACHING A BRIDGE.

UTILITIES:

UTILITY OWNERS ON THIS PROJECT ARE AT&T, USGS, AND GREENSBORO WATER RESOURCES.

ANY RELOCATION OF EXISTING UTILITIES WILL BE ACCOMPLISHED BY OTHERS.

LIST OF ROADWAY STANDARD DRAWINGS

EFF. 01-16-2018

2018 ROADWAY ENGLISH STANDARD DRAWINGS

The following Roadway Standards as appear in "Roadway Standard Drawings" Highway Design Branch – N. C. Department of Transportation – Raleigh, N. C., Dated January, 2018 are applicable to this project and by reference hereby are considered a part of these plans:

STD.NO.	TITLE
DIVISION 2 – EARTHWORK	
200.02	Method of Clearing – Method II
225.02	Guide for Grading Subgrade – Secondary and Local
225.04	Method of Obtaining Superelevation – Two Lane Pavement
DIVISION 3 – PIPE CULVERTS	
300.01	Method of Pipe Installation
DIVISION 4 – MAJOR STRUCTURES	
422.02	Type II Modified Approach Fill
DIVISION 5 – SUBGRADE, BASES AND SHOULDERS	
560.01	Method of Shoulder Construction – High Side of Superelevated Curve – Method I
DIVISION 6 – ASPHALT BASES AND PAVEMENTS	
654.01	Pavement Repairs
DIVISION 8 – INCIDENTALS	
840.00	Concrete Base Pad for Drainage Structures
840.18	Concrete Grated Drop Inlet Type 'B' – 12" thru 36" Pipe
840.22	Frames and Wide Slot Sag Grates
840.25	Anchorage for Frames – Brick or Concrete or Precast
840.27	Brick Grated Drop Inlet Type 'B' – 12" thru 36" Pipe
840.29	Frames and Narrow Slot Flat Grates
840.35	Traffic Bearing Grated Drop Inlet – for Cast Iron Double Frame and Grates
840.46	Traffic Bearing Precast Drainage Structure
840.66	Drainage Structure Steps
846.01	Concrete Curb, Gutter and Curb & Gutter
846.04	Drop Inlet Installation in Shoulder Berm Gutter
862.01	Guardrail Placement
862.02	Guardrail Installation
876.01	Rip Rap in Channels
876.02	Guide for Rip Rap at Pipe Outlets
876.04	Drainage Ditches with Class 'B' Rip Rap

INDEX OF SHEETS

SHEET NUMBER	DESCRIPTION
1	TITLE SHEET
1A	INDEX OF SHEETS, GENERAL NOTES, AND LIST OF STANDARD DRAWINGS
1B	CONVENTIONAL SYMBOLS
1C	SURVEY CONTROL SHEET
2A-1	PAVEMENT SCHEDULE AND TYPICAL SECTIONS
2C-1	GUARDRAIL INSTALLATION DETAIL
2C-2	GUARDRAIL ANCHOR UNITS DETAIL
3	GUARDRAIL, DRAINAGE, AND EARTHWORK SUMMARY
4	PLAN AND PROFILE SHEET
TMP-1 THRU TMP-3	TRAFFIC MANAGEMENT PLANS
EC-1 THRU EC-5	EROSION CONTROL PLANS
RF-1	REFORESTATION DETAIL SHEET
UO-1	UTILITIES BY OTHERS PLAN
X-1 THRU X-5	CROSS-SECTIONS
S-1 THRU S-27	STRUCTURE PLANS
SN	STRUCTURE NOTES

Pw:56855
R:\Roadway\Proj\B-4958_rdy_psh1A.dgn
4/5/2018 12:58:36 PM

PROJECT REFERENCE	SHEET NO.
B-4958 – GUILFORD 106	1B

STATE OF NORTH CAROLINA, DIVISION OF HIGHWAYS

CONVENTIONAL PLAN SHEET SYMBOLS

Note: Not to Scale **S.U.E. = Subsurface Utility Engineering*

BOUNDARIES AND PROPERTY:

- State Line
- County Line
- Township Line
- City Line
- Reservation Line
- Property Line
- Existing Iron Pin — EIP
- Computed Property Corner
- Property Monument — ECM
- Parcel/Sequence Number — 123
- Existing Fence Line
- Proposed Woven Wire Fence
- Proposed Chain Link Fence
- Proposed Barbed Wire Fence
- Existing Wetland Boundary — WLB
- Proposed Wetland Boundary — WLB
- Existing Endangered Animal Boundary — EAB
- Existing Endangered Plant Boundary — EPB
- Existing Historic Property Boundary — HPB
- Known Contamination Area: Soil — S
- Potential Contamination Area: Soil — S
- Known Contamination Area: Water — W
- Potential Contamination Area: Water — W
- Contaminated Site: Known or Potential

BUILDINGS AND OTHER CULTURE:

- Gas Pump Vent or U/G Tank Cap
- Sign — S
- Well — W
- Small Mine
- Foundation
- Area Outline
- Cemetery
- Building
- School
- Church
- Dam

HYDROLOGY:

- Stream or Body of Water
- Hydro, Pool or Reservoir
- Jurisdictional Stream — JS
- Buffer Zone 1 — BZ 1
- Buffer Zone 2 — BZ 2
- Flow Arrow
- Disappearing Stream
- Spring
- Wetland
- Proposed Lateral, Tail, Head Ditch — FLOW
- False Sump

RAILROADS:

- Standard Gauge — CSX TRANSPORTATION
- RR Signal Milepost — MILEPOST 35
- Switch — SWITCH
- RR Abandoned
- RR Dismantled

RIGHT OF WAY & PROJECT CONTROL:

- Secondary Horiz and Vert Control Point
- Primary Horiz Control Point
- Primary Horiz and Vert Control Point
- Exist Permanent Easment Pin and Cap
- New Permanent Easement Pin and Cap
- Vertical Benchmark
- Existing Right of Way Marker
- Existing Right of Way Line
- New Right of Way Line — RW
- New Right of Way Line with Pin and Cap — RW
- New Right of Way Line with Concrete or Granite R/W Marker — RW
- New Control of Access Line with Concrete C/A Marker — CA
- Existing Control of Access — CA
- New Control of Access — CA
- Existing Easement Line — E
- New Temporary Construction Easement — E
- New Temporary Drainage Easement — TDE
- New Permanent Drainage Easement — PDE
- New Permanent Drainage / Utility Easement — DUE
- New Permanent Utility Easement — PUE
- New Temporary Utility Easement — TUE
- New Aerial Utility Easement — AUE

ROADS AND RELATED FEATURES:

- Existing Edge of Pavement
- Existing Curb
- Proposed Slope Stakes Cut — C
- Proposed Slope Stakes Fill — F
- Proposed Curb Ramp — CR
- Existing Metal Guardrail
- Proposed Guardrail
- Existing Cable Guiderail
- Proposed Cable Guiderail
- Equality Symbol
- Pavement Removal

VEGETATION:

- Single Tree
- Single Shrub
- Hedge
- Woods Line
- Orchard
- Vineyard — Vineyard

EXISTING STRUCTURES:

MAJOR:

- Bridge, Tunnel or Box Culvert — CONC
- Bridge Wing Wall, Head Wall and End Wall — CONC WW

MINOR:

- Head and End Wall — CONC HW
- Pipe Culvert
- Footbridge
- Drainage Box: Catch Basin, DI or JB — CB
- Paved Ditch Gutter
- Storm Sewer Manhole — S
- Storm Sewer — S

UTILITIES:

POWER:

- Existing Power Pole
- Proposed Power Pole
- Existing Joint Use Pole
- Proposed Joint Use Pole
- Power Manhole — P
- Power Line Tower
- Power Transformer
- U/G Power Cable Hand Hole
- H-Frame Pole
- U/G Power Line LOS B (S.U.E.*) — P
- U/G Power Line LOS C (S.U.E.*) — P
- U/G Power Line LOS D (S.U.E.*) — P

TELEPHONE:

- Existing Telephone Pole
- Proposed Telephone Pole
- Telephone Manhole — T
- Telephone Pedestal — T
- Telephone Cell Tower
- U/G Telephone Cable Hand Hole
- U/G Telephone Cable LOS B (S.U.E.*) — T
- U/G Telephone Cable LOS C (S.U.E.*) — T
- U/G Telephone Cable LOS D (S.U.E.*) — T
- U/G Telephone Conduit LOS B (S.U.E.*) — TC
- U/G Telephone Conduit LOS C (S.U.E.*) — TC
- U/G Telephone Conduit LOS D (S.U.E.*) — TC
- U/G Fiber Optics Cable LOS B (S.U.E.*) — T FO
- U/G Fiber Optics Cable LOS C (S.U.E.*) — T FO
- U/G Fiber Optics Cable LOS D (S.U.E.*) — T FO

WATER:

- Water Manhole — W
- Water Meter
- Water Valve
- Water Hydrant
- U/G Water Line LOS B (S.U.E*) — W
- U/G Water Line LOS C (S.U.E*) — W
- U/G Water Line LOS D (S.U.E*) — W
- Above Ground Water Line — A/G Water

TV:

- TV Pedestal — C
- TV Tower
- U/G TV Cable Hand Hole — HH
- U/G TV Cable LOS B (S.U.E.*) — TV
- U/G TV Cable LOS C (S.U.E.*) — TV
- U/G TV Cable LOS D (S.U.E.*) — TV
- U/G Fiber Optic Cable LOS B (S.U.E.*) — TV FO
- U/G Fiber Optic Cable LOS C (S.U.E.*) — TV FO
- U/G Fiber Optic Cable LOS D (S.U.E.*) — TV FO

GAS:

- Gas Valve
- Gas Meter
- U/G Gas Line LOS B (S.U.E.*) — G
- U/G Gas Line LOS C (S.U.E.*) — G
- U/G Gas Line LOS D (S.U.E.*) — G
- Above Ground Gas Line — A/G Gas

SANITARY SEWER:

- Sanitary Sewer Manhole
- Sanitary Sewer Cleanout
- U/G Sanitary Sewer Line — SS
- Above Ground Sanitary Sewer — A/G Sanitary Sewer
- SS Forced Main Line LOS B (S.U.E.*) — FSS
- SS Forced Main Line LOS C (S.U.E.*) — FSS
- SS Forced Main Line LOS D (S.U.E.*) — FSS

MISCELLANEOUS:

- Utility Pole
- Utility Pole with Base
- Utility Located Object
- Utility Traffic Signal Box — S
- Utility Unknown U/G Line LOS B (S.U.E.*) — ?UTL
- U/G Tank; Water, Gas, Oil
- Underground Storage Tank, Approx. Loc. — UST
- A/G Tank; Water, Gas, Oil
- Geoenvironmental Boring
- U/G Test Hole LOS A (S.U.E.*)
- Abandoned According to Utility Records — AATUR
- End of Information — E.O.I.

12/2/2016
Ph:56855
R:\Roadway\Proj\B-4958_rdy_psh1B.dgn
4/5/2018 12:58:39 PM

PROJECT REFERENCE NO.	SHEET NO.
40150.1.1	1C-1
Location and Surveys	

B-4958 SURVEY CONTROL SHEET

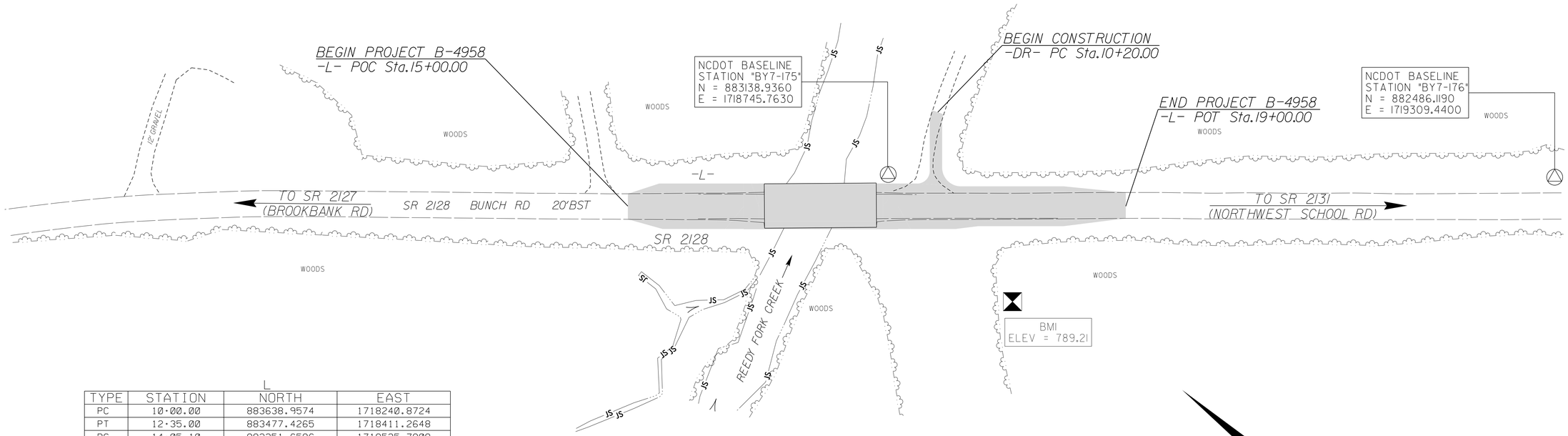

L

TYPE	STATION	NORTH	EAST
PC	10+00.00	883638.9574	1718240.8724
PT	12+35.00	883477.4265	1718411.2648
PC	14+05.10	883351.6596	1718525.7908
PT	15+53.94	883242.1085	1718626.5490
POT	22+50.00	882732.1337	1719100.2840

-L- FINAL NEW PERMANENT DRAINAGE EASEMENTS

ALIGN	STATION	OFFSET	NORTH	EAST
L	15+00.00	29.74	883261.53458	1718568.04970
L	15+00.00	-30.26	883302.21214	1718612.15604
L	16+00.00	70.00	883160.72073	1718606.61091
L	16+00.00	-65.00	883252.60109	1718705.51996
L	16+70.00	70.00	883109.43456	1718654.25258
L	17+00.00	-65.00	883179.33513	1718773.57948
L	17+65.00	-50.00	883121.50332	1718806.82828
L	17+72.33	29.79	883061.82854	1718753.35950
L	18+50.00	-50.00	883059.22726	1718864.67888
L	19+00.00	-30.14	883009.07829	1718884.15871

BASELINE DATA

BL

POINT	DESC.	NORTH	EAST	ELEVATION	BL STATION	OFFSET
175	BY7-175	883138.9360	1718745.7630	786.95	5+00.00	0.00
176	BY7-176	882486.1190	1719309.4400	836.13	13+62.50	0.00
177	BY7-177	881880.3410	1719918.8780	838.81	22+21.79	0.00

NOTES

1. *THE CONTROL DATA FOR THIS PROJECT CAN BE FOUND ELECTRONICALLY BY SELECTING PROJECT CONTROL DATA AT:*
HTTP://WWW.DOH.DOT.STATE.NC.US/PRECONSTRUCT/HIGHWAY/LOCATION/PROJECT/

THE FILES TO BE FOUND ARE AS FOLLOWS:
b4958_ls_control.txt

SITE CALIBRATION INFORMATION HAS NOT BEEN PROVIDED FOR THIS PROJECT. IF FURTHER INFORMATION IS NEEDED, PLEASE CONTACT THE LOCATION AND SURVEYS UNIT.

INDICATES GEODETIC CONTROL MONUMENTS USED OR SET FOR HORIZONTAL PROJECT CONTROL BY THE NCDOT LOCATION AND SURVEYS UNIT.

PROJECT CONTROL ESTABLISHED USING GLOBAL POSITIONING SYSTEM.

DATUM DESCRIPTION

THE LOCALIZED COORDINATE SYSTEM DEVELOPED FOR THIS PROJECT IS BASED ON THE STATE PLANE COORDINATES ESTABLISHED BY NCDOT FOR MONUMENT "R2413-10"
WITH NAD 83/NSRS 2007 STATE PLANE GRID COORDINATES OF
NORTHING: 881462.0710(ft) EASTING: 1720890.5840(ft)
ELEVATION: 886.31'(ft)
THE AVERAGE COMBINED GRID FACTOR USED ON THIS PROJECT (GROUND TO GRID) IS: 0.9999635813
THE N.C. LAMBERT GRID BEARING AND
LOCALIZED HORIZONTAL GROUND DISTANCE FROM
"R2413-10" TO -L- STATION 15+00.00 IS
N 51°39'33" W 2,933.28'
ALL LINEAR DIMENSIONS ARE LOCALIZED HORIZONTAL DISTANCES
VERTICAL DATUM USED IS NAVD 88

BENCHMARK DATA

BM1 ELEVATION = 789.21
N 883003 E 1718744
L STATION 18+09.00 77 RIGHT
R\R SPIKE IN BASE OF 20" PINE

NOTE: DRAWING NOT TO SCALE

12/01/2005

10:49:39 AM
\\ncdot.gov\Proj\b4958_ls_lc-1.dgn

DocuSign Envelope ID: DCF9B4DF-EB16-4579-B1B6-B7CA12AEA2D2

PROJECT REFERENCE	SHEET NO.
B-4958 – GUILFORD 106	2

ROADWAY DESIGN ENGINEER

NORTH CAROLINA PROFESSIONAL SEAL 21102 ENGINEER JAMES WILLIAM LONDON

DocuSigned by: James William London 4/25/2018

SIGNATURE/DATE
MOTT MACDONALD I & E, LLC
LICENSE NO. F-0669

DOCUMENT NOT CONSIDERED FINAL UNLESS ALL SIGNATURES COMPLETED

Prepared in the Office of:

MOTT MACDONALD
PO Box 700
Fuquay-Varina, NC 27526
www.mottmac.com/americas

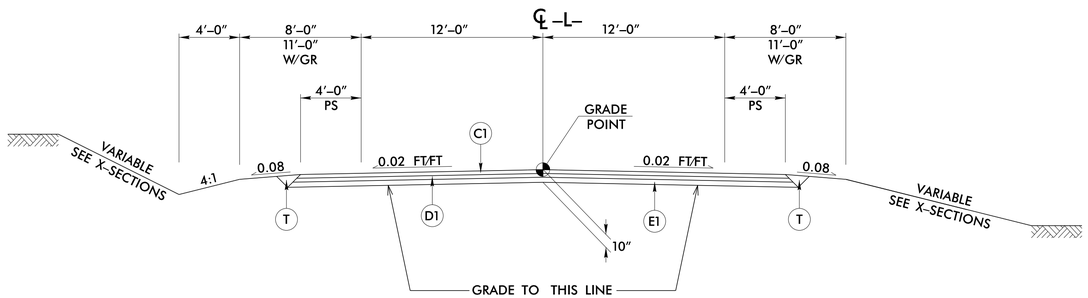

TYPICAL SECTION NO. 1

TRANSITION FROM EXISTING TO TYPICAL SECTION NO. 1:
–L– STA 15+00.00 TO 15+50.00

USE TYPICAL SECTION NO. 1:
–L– STA 15+50.00 TO 16+02.77 (BEGIN BRIDGE)
–L– STA 17+05.23 (END BRIDGE) TO 18+50.00

TRANSITION FROM TYPICAL SECTION NO. 1 TO EXISTING:
–L– STA 18+50.00 TO 19+00.00

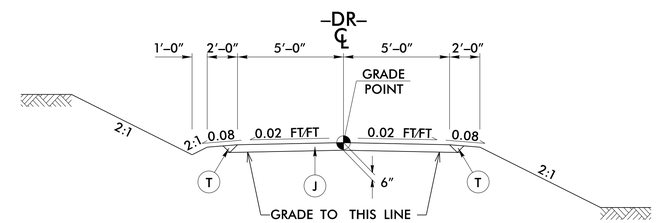

TYPICAL SECTION NO. 3

USE TYPICAL SECTION NO. 3:
–DR– STA 10+20.00 TO 10+95.68

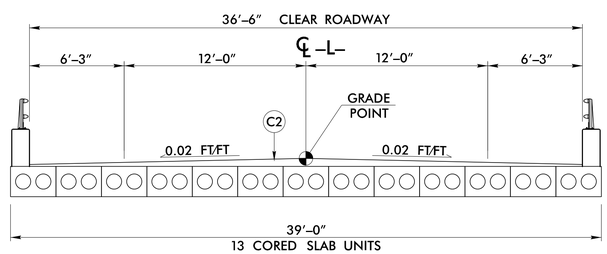

TYPICAL SECTION NO. 2

USE TYPICAL SECTION NO. 2:
–L– STA 16+02.77 (BEGIN BRIDGE) TO 17+05.23 (END BRIDGE)

NOTE: SEE STRUCTURE PLANS FOR PAVEMENT DEPTHS ON STRUCTURE

PAVEMENT SCHEDULE	
C1	PROP. APPROX. 3" ASPHALT CONCRETE SURFACE COURSE, TYPE S9.5C, AT AN AVERAGE RATE OF 168 LBS. PER SQ. YD. IN EACH OF TWO LAYERS.
C2	PROP. VAR. DEPTH ASPHALT CONCRETE SURFACE COURSE, TYPE S9.5C, AT AN AVERAGE RATE OF 112 LBS. PER SQ. YD. PER 1" DEPTH. TO BE PLACED IN LAYERS NOT LESS THAN 1½" IN DEPTH OR GREATER THAN 2" IN DEPTH.
D1	PROP. APPROX. 4" ASPHALT CONCRETE INTERMEDIATE COURSE, TYPE I19.0C, AT AN AVERAGE RATE OF 456 LBS. PER SQ. YD.
E1	PROP. APPROX. 3" ASPHALT CONCRETE BASE COURSE, TYPE B25.0C, AT AN AVERAGE RATE OF 342 LBS. PER SQ. YD.
J	PROP. 6" AGGREGATE BASE COURSE.
T	EARTH MATERIAL.

NOTE: PAVEMENT EDGE SLOPES ARE 1:1 UNLESS SHOWN OTHERWISE.

Ph:56855
R:\Roadway\Proj\B-4958_rdy_typ.dgn
4/25/2018 12:58:42 PM

DocuSign Envelope ID: 13D0F818-5508-4D20-AA92-F102EE3D8F63

PROJECT REFERENCE NO.	SHEET NO.
B-4958- GUILFORD 106	2C-1
DOCUMENT NOT CONSIDERED FINAL UNLESS ALL SIGNATURES COMPLETED	

STATE OF
NORTH CAROLINA
DEPT. OF TRANSPORTATION
DIVISION OF HIGHWAYS
RALEIGH, N.C.

ROADWAY DETAIL DRAWING FOR
GUARDRAIL INSTALLATION

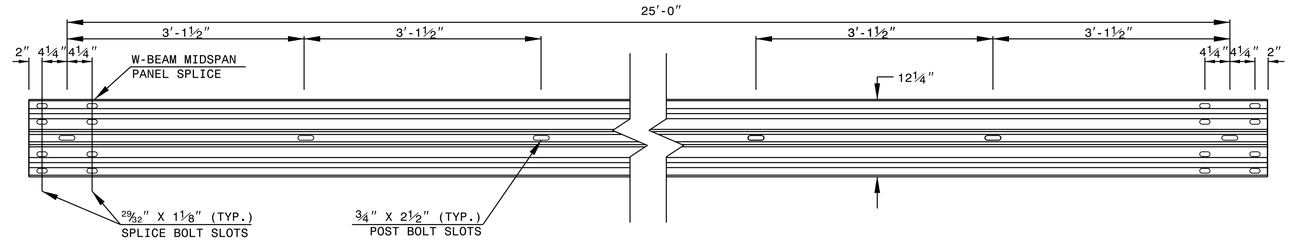

STANDARD W-BEAM GUARDRAIL

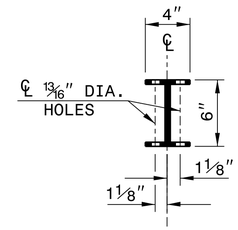

PLAN

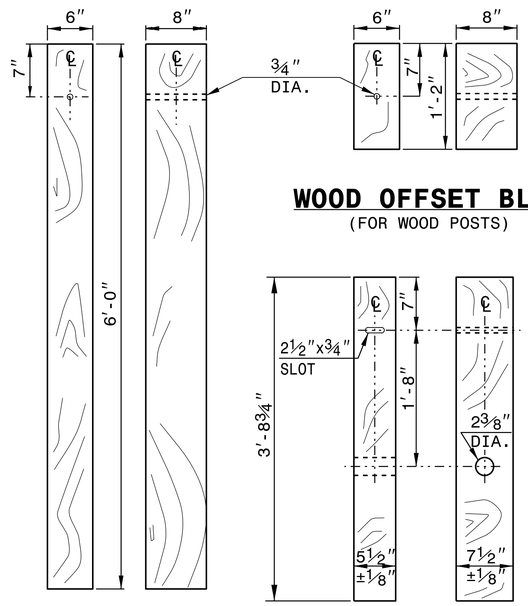

WOOD OFFSET BLOCK
(FOR WOOD POSTS)

STANDARD LINE POST

SHORT WOOD BREAKAWAY POST

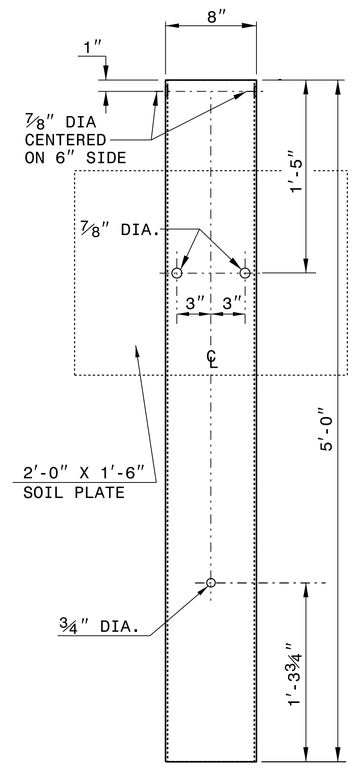

STEEL TUBE
TS 6"x8"x0.1875"

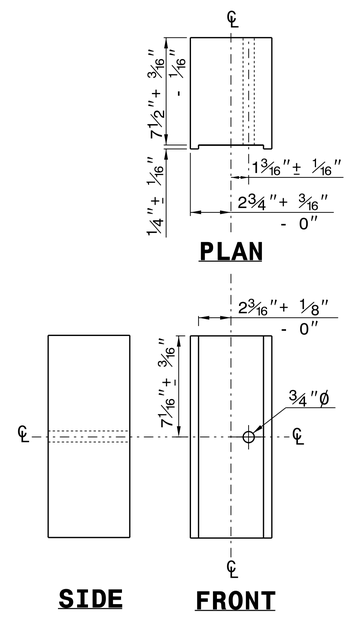

ROUTED OFFSET BLOCK

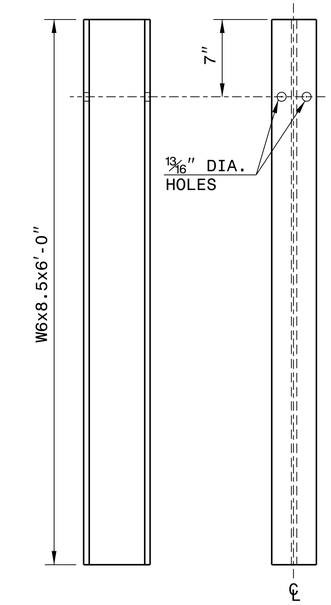

SIDE FRONT
"W6" STEEL POST

SYSTEM PARTS

SHEET 6 OF 8
862D02

STATE OF
NORTH CAROLINA
DEPT. OF TRANSPORTATION
DIVISION OF HIGHWAYS
RALEIGH, N.C.

ROADWAY DETAIL DRAWING FOR
GUARDRAIL INSTALLATION

SHEET 6 OF 8
862D02

NORTH CAROLINA PROFESSIONAL SEAL 022966 ENGINEER J. HOWERTON

DocuSigned by: Joel S. Howerton 3/6/2018
B73F3D17DCDC49F...

CONTRACTS STANDARDS AND DEVELOPMENT UNIT
Office 919-707-6950 FAX 919-250-4119

SEE TITLE BLOCK

ORIGINAL BY: J.HOWERTON DATE: 3-7-2018
MODIFIED BY: DATE:
CHECKED BY: DATE:
FILE SPEC.:

DocuSign Envelope ID: 13D0F818-5508-4D20-A402-F1D2EE3D9F63

STATE OF NORTH CAROLINA
DEPT. OF TRANSPORTATION
DIVISION OF HIGHWAYS
RALEIGH, N.C.

ROADWAY DETAIL DRAWING FOR
STRUCTURE ANCHOR UNITS
GUARDRAIL ANCHOR UNIT, TYPE III
FOR ATTACHMENT TO RAIL ON BRIDGE

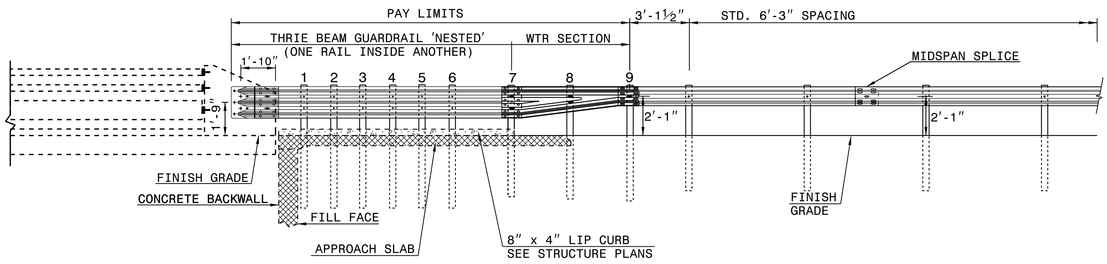

ELEVATION

NOTE:
**POST NOT REQUIRED FOR SKEW ANGLES GREATER THAN 150° OR LESS THAN 30° UNLESS OTHERWISE DIRECTED BY THE ENGINEER.
*THE DISTANCE FROM END OF BRIDGE RAIL TO CENTER LINE OF THE FIRST POST SHOULD BE 11½" IF CONCRETE BACKWALL IS NOT PRESENT.
-SHOULDER BERM GUTTER MUST BE INSTALLED TO THE LIMITS 8" x 4" LIP CURB IS SHOWN IF ANCHOR UNIT IS NOT ADJACENT TO AN APPROACH SLAB.
-MEASURE GUARDRAIL HEIGHT FROM THE TOP OF ADJACENT SURFACE (SHOULDER, BERM, OR GUTTER).
-LAP JOINTS IN THE DIRECTION OF TRAFFIC FLOW.
-SEE SHEET 3 FOR POST SECTIONS 1 THRU 9.

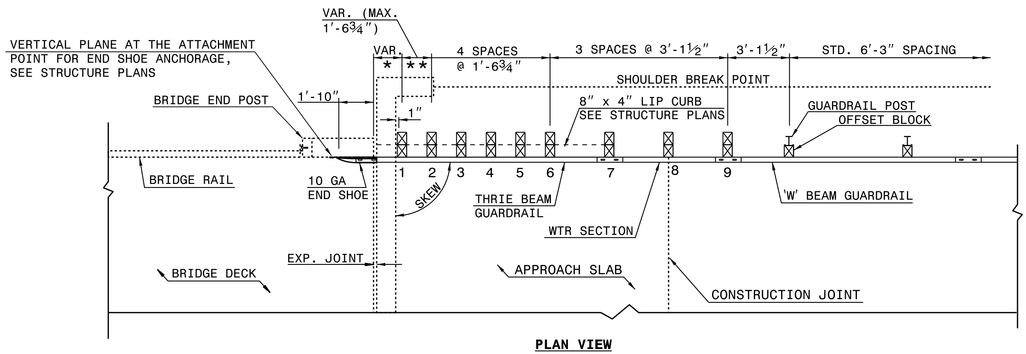

PLAN VIEW

GUARDRAIL ANCHOR UNIT, TYPE III FOR ATTACHMENT TO RAIL ON BRIDGE

SHEET 1 OF 7
862D03

STATE OF NORTH CAROLINA
DEPT. OF TRANSPORTATION
DIVISION OF HIGHWAYS
RALEIGH, N.C.

ROADWAY DETAIL DRAWING FOR
STRUCTURE ANCHOR UNITS
GUARDRAIL ANCHOR UNIT, TYPE III
FOR ATTACHMENT TO RAIL ON BRIDGE

SHEET 1 OF 7
862D03

STATE OF NORTH CAROLINA
DEPT. OF TRANSPORTATION
DIVISION OF HIGHWAYS
RALEIGH, N.C.

ROADWAY DETAIL DRAWING FOR
STRUCTURE ANCHOR UNITS
GUARDRAIL ANCHOR UNIT, TYPE III FOR ATTACHMENT TO
RAIL ON BRIDGE - SUB REGIONAL TIER

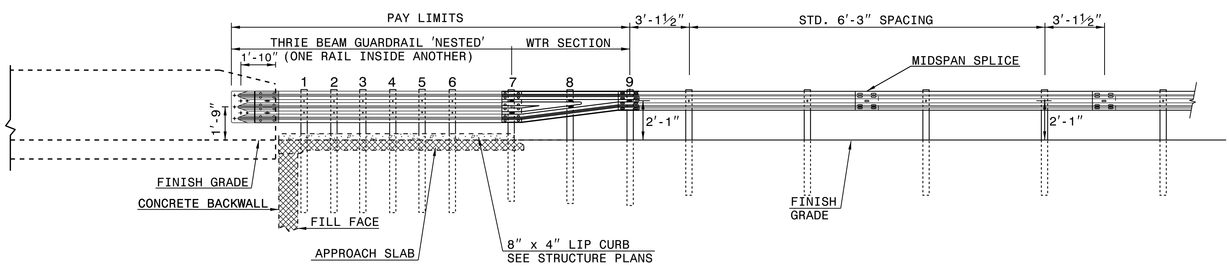

ELEVATION

NOTE:
**POST NOT REQUIRED FOR SKEW ANGLES GREATER THAN 150° OR LESS THAN 30° UNLESS OTHERWISE DIRECTED BY THE ENGINEER.
*THE DISTANCE FROM END OF BRIDGE RAIL TO CENTER LINE OF THE FIRST POST SHOULD BE 11½" IF CONCRETE BACKWALL IS NOT PRESENT.
-SHOULDER BERM GUTTER MUST BE INSTALLED TO THE LIMITS 8" x 4" LIP CURB IS SHOWN IF ANCHOR UNIT IS NOT ADJACENT TO AN APPROACH SLAB.
-MEASURE GUARDRAIL HEIGHT FROM THE TOP OF ADJACENT SURFACE (SHOULDER, BERM, OR GUTTER).
-LAP JOINTS IN THE DIRECTION OF TRAFFIC FLOW.
-SEE SHEET 3 FOR POST SECTIONS 1 THRU 9.

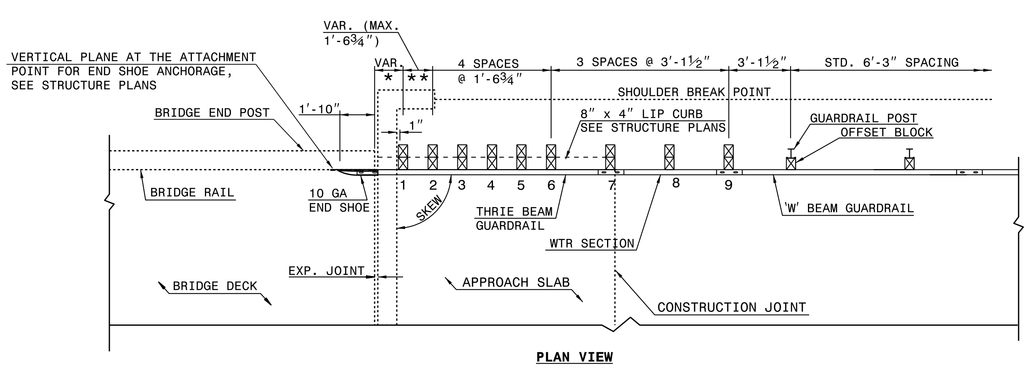

PLAN VIEW

GUARDRAIL ANCHOR UNIT, TYPE III FOR ATTACHMENT TO RAIL ON BRIDGE - SUB REGIONAL TIER

SHEET 2 OF 7
862D03

STATE OF NORTH CAROLINA
DEPT. OF TRANSPORTATION
DIVISION OF HIGHWAYS
RALEIGH, N.C.

ROADWAY DETAIL DRAWING FOR
STRUCTURE ANCHOR UNITS
GUARDRAIL ANCHOR UNIT, TYPE III FOR ATTACHMENT TO
RAIL ON BRIDGE - SUB REGIONAL TIER

SHEET 2 OF 7
862D03

SEE TITLE BLOCK

ORIGINAL BY: J. HOWERTON DATE: 06-22-12
MODIFIED BY: DATE:
CHECKED BY: DATE:
FILE SPEC.:

CONTRACT STANDARDS AND DEVELOPMENT UNIT
Office 919-707-6950 FAX 919-250-4119

DOCUMENT NOT CONSIDERED FINAL UNLESS ALL SIGNATURES COMPLETED

DocuSigned by: Jay S. Howerton
8/6/2018
B7F3D1D0DC4F...

NORTH CAROLINA PROFESSIONAL SEAL 022966 ENGINEER

PROJECT REFERENCE NO.: B-4958- GUILFORD 106
SHEET NO.: 2C-2

PROJECT REFERENCE	SHEET NO.
B-4958 – GUILFORD 106	3

"N" = DISTANCE FROM EDGE OF LANE TO FACE OF GUARDRAIL.
TOTAL SHOULDER WIDTH = DISTANCE FROM EDGE OF TRAVEL LANE TO SHOULDER BREAK POINT.
FLARE LENGTH = DISTANCE FROM LAST SECTION OF PARALLEL GUARDRAIL TO END OF GUARDRAIL.
W = TOTAL WIDTH OF FLARE FROM BEGINNING OF TAPER TO END OF GUARDRAIL.
G = GATING IMPACT ATTENUATOR TYPE 350
NG = NON-GATING IMPACT ATTENUATOR TYPE 350

GUARDRAIL SUMMARY

SURVEY LINE	BEG. STA.	END STA.	LOCATION	LENGTH STRAIGHT	LENGTH SHOP CURVED	LENGTH DOUBLE FACED	WARRANT POINT APPROACH END	WARRANT POINT TRAILING END	"N" DIST. FROM E.O.L.	TOTAL SHOULDER WIDTH	FLARE LENGTH APPROACH END	FLARE LENGTH TRAILING END	W APPROACH END	W TRAILING END	ANCHORS AT-1	ANCHORS GREU TL-2	ANCHORS TYPE III							IMPACT ATTENUATOR TYPE 350 NO.	PERMITTED G	PERMITTED NG	REMARKS
-L-	15+29.13	15+97.88	RT	68.75'			15+97.88 (BRIDGE)		6.25'	9'						1	1										
-L-	15+26.41	16+07.66	LT	81.25'				16+07.66 (BRIDGE)	6.25'	9'						1	1										
-L-	17+00.34	17+56.59	RT	56.25'				17+00.34 (BRIDGE)	6.25'	9'						1	1										
-L-	17+10.12	17+40 +/-	LT	25.00'	12.50'		17+10.12 (BRIDGE)		6.25'	9'					1		1										BREAK FOR DRIVE
		SUBTOTAL		231.25'	12.50'																						
		LESS ANCHOR DEDUCTIONS																									
		GREU TL-2 3 x 25.00' =		-75.00'																							
		TYPE III 4 x 18.75' =		-75.00'																							
		AT-1 1 x 6.25' =		-6.25'																							
		TOTAL		75.00'	12.50'										1	3	4										

SUB-REGIONAL & REGIONAL
LIST OF PIPES, ENDWALLS, ETC. (FOR PIPES 48" & UNDER)

STATION / SIZE / THICKNESS OR GAUGE	LOCATION (LT, RT, OR CL)	STRUCTURE NO. FROM	STRUCTURE NO. TO	TOP ELEVATION	INVERT ELEVATION	INVERT ELEVATION	SLOPE CRITICAL	DRAINAGE PIPE (RCP, CSP, CAAP, HDPE, or PVC) 12"	15"	18"	24"	30"	36"	42"	48"	DO NOT USE RCP	DO NOT USE PVC	DO NOT USE CAAP	DO NOT USE HDPE
15+65	RT	410	411	789.5'	786.7'	786.6'													
15+65	LT	411	412	789.5'	786.6'	779.6'			20'							X			
19+05	LT	413	414	790.8'	788.0'	783.8'													
17+72	LT	414	415	786.6'	783.6'	777.0'				68'						X	X		X
TOTAL									20'	68'									

STATION	C.S. PIPE 12" (.064)	15" (.064)	18" (.064)	24" (.064)	36" (.079)	42" (.109)	48" (.109)	R.C. PIPE (CLASS III) 15"	18"	24"	30"	36"	42"	48"	R.C. PIPE (CLASS IV) 12"	15"	18"	24"	30"	36"	42"	48"
15+65																32'						
15+65																						
19+05																128'						
17+72																						
TOTAL																160'						

STATION	*** R. C. PIPE (CLASS V)	*** R. C. PIPE CULVERTS, CONTRACTOR DESIGN PIPE	*** R. C. PIPE CULVERTS, CONTRACTOR DESIGN PIPE	15" SIDE DRAIN PIPE	18" SIDE DRAIN PIPE	ENDWALLS STD. 838.01, STD. 838.11 OR STD. 838.80 (UNLESS NOTED OTHERWISE) CU. YDS. R.C.P.	C.S.P.	QUANTITIES FOR DRAINAGE STRUCTURES PER EACH (0' THRU 5.0')	* TOTAL L.F. FOR PAY QUANTITY SHALL BE COL. 'A' + (1.3 X COL.'B') LIN. *FT. A 5.0' THRU 10.0'	B 10.0' AND ABOVE	C.B. STD. 840.01 OR STD. 840.02	FRAME, GRATES AND HOOD STANDARD 840.03 TYPE OF GRATE E	F	G		CONCRETE TRANSITIONAL SECTION CATCH BASIN	DROP INLET		G.D.I. TYPE "B" STD. 840.18 OR 840.27	G.D.I. FRAME WITH TWO GRATES STD. 840.22	G.D.I. (N.S.) FRAME WITH TWO GRATES STD. 840.24	G.D.I. (N.S.) FRAME WITH TWO GRATES STD. 840.29	T.B.D.I. STD. 840.35	DRAINAGE PIPE ELBOWS NO. & SIZE	CONC. COLLARS CL. "B" C.Y. STD 840.72	CONC. & BRICK PIPE PLUG, C.Y. STD. 840.71	PIPE REMOVAL LIN.FT.	REMARKS
15+65								1														1	1					
15+65								1														1	1	2@15"				
19+05								1											1	1							34	
17+72								1											1	1								
TOTAL								4											2	2		2	2	2@15"			34	

ABBREVIATIONS

C.B.	CATCH BASIN
N.D.I.	NARROW DROP INLET
D.I.	DROP INLET
G.D.I.	GRATED DROP INLET
G.D.I. (N.S.)	GRATED DROP INLET (NARROW SLOT)
J.B.	JUNCTION BOX
M.H.	MANHOLE
T.B.D.I.	TRAFFIC BEARING DROP INLET
T.B.J.B.	TRAFFIC BEARING JUNCTION BOX

NOTE: Invert Elevations are for Bid Purposes only and shall not be used for project construction stakeout.
See "Standard Specifications For Roads and Structures, Section 300-5".

SUMMARY OF EARTHWORK
IN CUBIC YARDS

LOCATION	UNCLASSIFIED EXCAVATION	UNDERCUT	EMBT+%	BORROW	WASTE
-L- 15+00.00 TO 16+02.77 (BEGIN BRIDGE)	99		197	98	
-L- 17+05.23 (END BRIDGE) TO 19+00.00	408		48		360
-DR- 10+20.00 TO 10+95.68	25		31	6	
SUBTOTAL	532		276	104	360
WASTE IN LIEU OF BORROW					
PROJECT TOTAL	532			-104	-104
5% TO REPLACE BORROW					
GRAND TOTAL	532			0	256
SAY	560			0	

NOTE: Approximate quantities only. Unclassified Excavation, Borrow Excavation, Fine Grading, Clearing and Grubbing and Removal of Existing Asphalt Pavement will be paid for at the contract Lump Sum price for "Grading".

Ph:56855
R:\Roadway\Proj\B-4958_rdy_psh3.dgn
4/5/2018 12:58:45 PM

DocuSign Envelope ID: DCF9B4DF-EB16-4579-B1B6-B7CA12AEA2D2

PROJECT REFERENCE	SHEET NO.
B-4958- GUILFORD 106	4

ROADWAY DESIGN ENGINEER
NORTH CAROLINA PROFESSIONAL SEAL 21102 ENGINEER JAMES TIMOTHY JORDAN
DocuSigned by: James Timothy Jordan 4/6/2018
3A9D9B8B7D7248...
MOTT MACDONALD I & E, LLC
LICENSE NO. F-0669

HYDRAULICS ENGINEER
NORTH CAROLINA PROFESSIONAL SEAL 022000 ENGINEER W. GALEN CAIN
DocuSigned by: W. Galen Cain 4/6/2018
06F0970D6041140S...

DOCUMENT NOT CONSIDERED FINAL UNLESS ALL SIGNATURES COMPLETED

Prepared in the Office of: MOTT MACDONALD
PO Box 700
Fuquay-Varina, NC 27526
www.mottmac.com/americas

VERTICAL SCALE 5' 0 5' 10'
HORIZONTAL SCALE 25' 0 25' 50'

DETAIL A
TOE PROTECTION
(Not to Scale)

Type of Liner= CLASS B Rip-Rap
-L- STA. 15+20 TO 15+95 LT

DETAIL B
STANDARD BASE DITCH
(Not to Scale)

Type of Liner= CLASS I Rip-Rap
-L- STA. 16+83 TO 17+05 LT
-L- STA. 16+65 TO 16+90 RT

DETAIL C
RIP RAP AT EMBANKMENT
(Not to Scale)

Type of Liner= CL II Rip-Rap
-L- STA. 16+80 LT
-L- STA. 16+62 RT

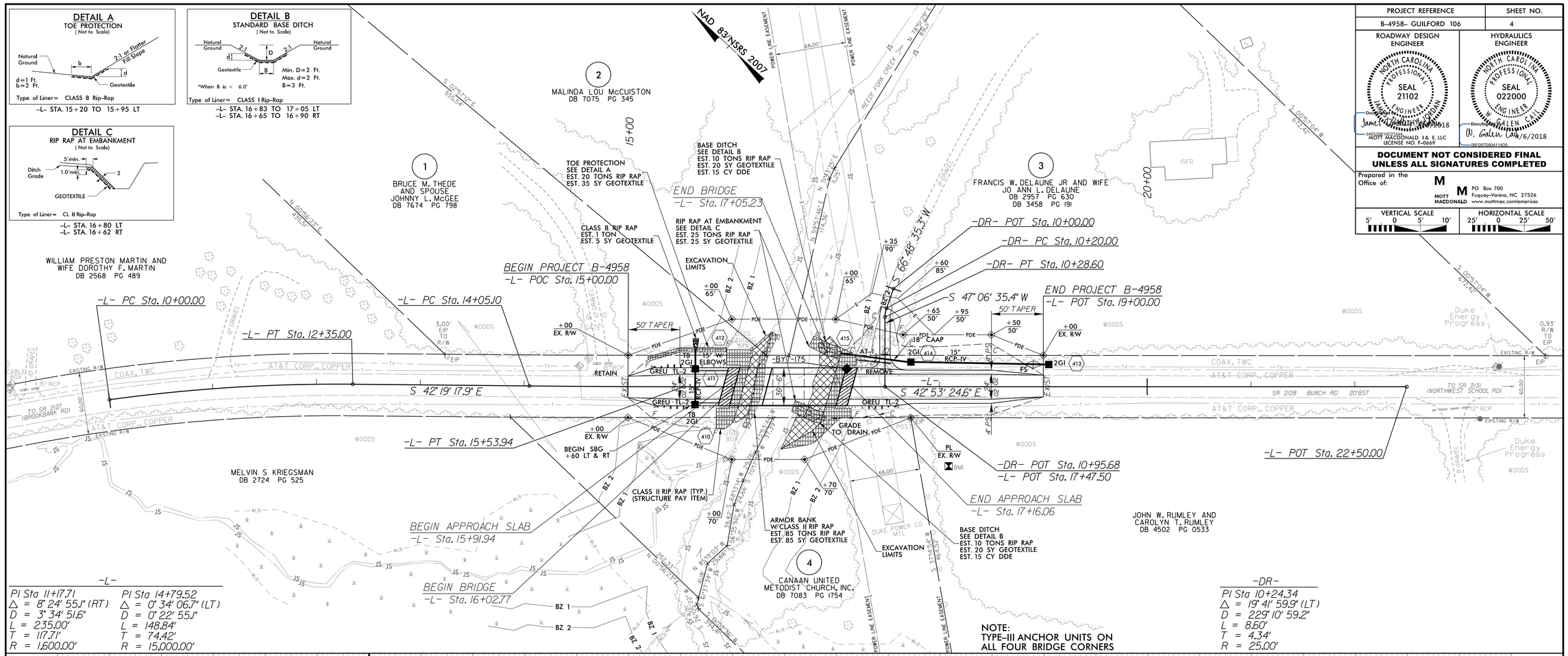

-L-
PI Sta 11+17.71
△ = 8° 24' 55.1" (RT)
D = 3° 34' 51.6"
L = 235.00'
T = 117.71'
R = 1,600.00'

PI Sta 14+79.52
△ = 0° 34' 06.7" (LT)
D = 0° 22' 55.1"
L = 148.84'
T = 74.42'
R = 15,000.00'

-DR-
PI Sta 10+24.34
△ = 19° 41' 59.9" (LT)
D = 229° 10' 59.2"
L = 8.60'
T = 4.34'
R = 25.00'

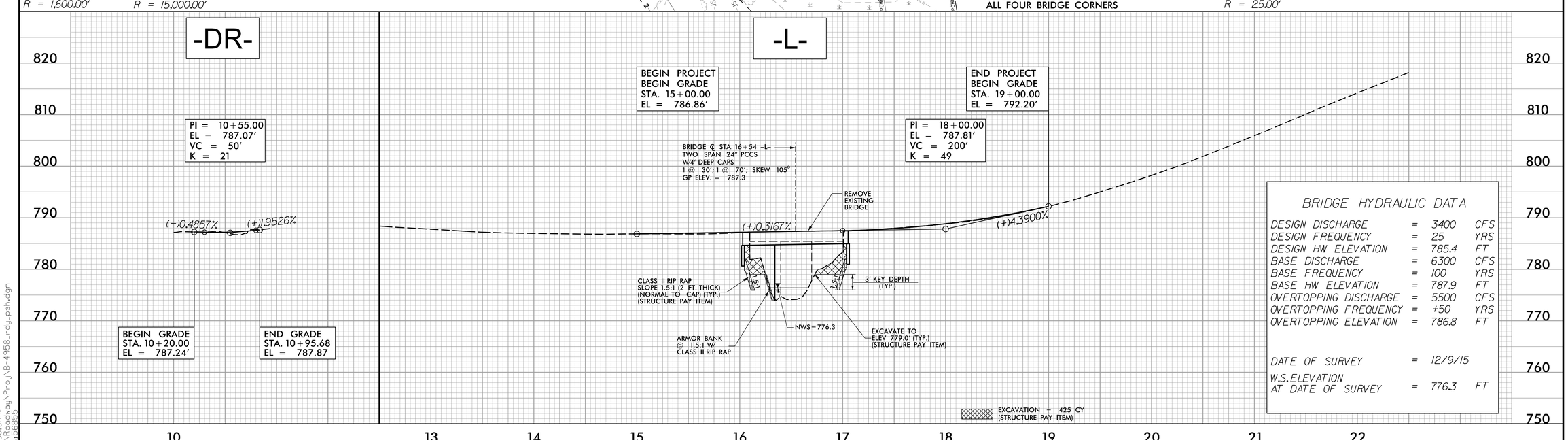

BRIDGE HYDRAULIC DATA

DESIGN DISCHARGE	=	3400	CFS
DESIGN FREQUENCY	=	25	YRS
DESIGN HW ELEVATION	=	785.4	FT
BASE DISCHARGE	=	6300	CFS
BASE FREQUENCY	=	100	YRS
BASE HW ELEVATION	=	787.9	FT
OVERTOPPING DISCHARGE	=	5500	CFS
OVERTOPPING FREQUENCY	=	+50	YRS
OVERTOPPING ELEVATION	=	786.8	FT
DATE OF SURVEY	=	12/9/15	
W.S. ELEVATION AT DATE OF SURVEY	=	776.3	FT

4/5/2018
12:58:51 PM
R:\Roadway\Proj\B-4958_rdy_psh.dgn
PW16885

DocuSign Envelope ID: 64306EC1-AFC6-42E9-AC54-040BC3D13F6B

THE FOLLOWING ROADWAY STANDARDS AS APPEAR IN "ROADWAY STANDARD DRAWINGS" – HIGHWAY DESIGN BRANCH– N.C. DEPARTMENT OF TRANSPORTATION – RALEIGH, N.C., DATED JANUARY 2018 ARE APPLICABLE TO THIS PROJECT AND BY REFERENCE HEREBY ARE CONSIDERED A PART OF THESE PLANS:

STD.	TITLE
1101.03	TEMPORARY ROAD CLOSURES
1110.01	STATIONARY WORK ZONE SIGNS
1145.01	BARRICADES
1205.01	PAVEMENT MARKINGS – LINE TYPES AND OFFSETS
1205.02	PAVEMENT MARKINGS – TWO–LANE AND MULTI–LANE ROADWAYS
1205.12	PAVEMENT MARKINGS – BRIDGES
1261.01	GUARDRAIL AND BARRIER DELINEATORS – INSTALLATION SPACING
1261.02	GUARDRAIL AND BARRIER DELINEATORS – TYPES AND MOUNTING
1262.01	GUARDRAIL END DELINEATION

GENERAL NOTES

CHANGES MAY BE REQUIRED WHEN PHYSICAL DIMENSIONS IN THE DETAIL DRAWINGS, STANDARD DETAILS, AND ROADWAY DETAILS ARE NOT ATTAINABLE TO MEET FIELD CONDITIONS OR RESULT IN DUPLICATE OR UNDESIRED OVERLAPPING OF DEVICES. MODIFICATION MAY INCLUDE: MOVING, SUPPLEMENTING, COVERING, OR REMOVAL OF DEVICES AS DIRECTED BY THE ENGINEER.

THE FOLLOWING GENERAL NOTES APPLY AT ALL TIMES FOR THE DURATION OF THE CONSTRUCTION PROJECT EXCEPT WHEN OTHERWISE NOTED IN THE PLAN OR DIRECTED BY THE ENGINEER.

TRAFFIC PATTERN ALTERATIONS

A) NOTIFY THE ENGINEER TWENTY ONE (21) CALENDAR DAYS PRIOR TO ANY TRAFFIC PATTERN ALTERATION.

SIGNING

B) PROVIDE PERMANENT SIGNING.

C) PROVIDE SIGNING AND DEVICES REQUIRED TO CLOSE THE ROAD ACCORDING TO THE ROADWAY STANDARD DRAWINGS AND TRAFFIC CONTROL PLANS.

PROVIDE SIGNING REQUIRED FOR THE OFF–SITE DETOUR ROUTE AS SHOWN IN THE TRAFFIC CONTROL PLANS.

D) COVER OR REMOVE ALL SIGNS AND DEVICES REQUIRED TO CLOSE THE ROAD WHEN ROAD CLOSURE IS NOT IN OPERATION.

COVER OR REMOVE ALL SIGNS REQUIRED FOR THE OFF–SITE DETOUR WHEN THE DETOUR IS NOT IN OPERATION.

E) ENSURE ALL NECESSARY SIGNING IS IN PLACE PRIOR TO ALTERING ANY TRAFFIC PATTERN.

TRAFFIC CONTROL DEVICES

F) PLACE TYPE III BARRICADES, WITH "ROAD CLOSED" SIGN R11–2 ATTACHED, OF SUFFICIENT LENGTH TO CLOSE ENTIRE ROADWAY.

PAVEMENT MARKINGS AND MARKERS

G) INSTALL PAVEMENT MARKINGS ON THE FINAL SURFACE.

PROJECT REFERENCE	SHEET NO.
B–4958 – GUILFORD 106	TMP–1

ROADWAY DESIGN ENGINEER

NORTH CAROLINA PROFESSIONAL SEAL 21102 ENGINEER

DocuSigned by: James Lawrence Gordon 5/8/2018 | 7:00:00 PM EDT
5A8D29B1F027442...
MOTT MACDONALD I & E, LLC
LICENSE NO. F–0669

DOCUMENT NOT CONSIDERED FINAL UNLESS ALL SIGNATURES COMPLETED

Prepared in the Office of:
MOTT MACDONALD
PO Box 700
Fuquay–Varina, NC 27526
www.mottmac.com/americas

PHASING

STEP 1: USING ROADWAY STANDARD DRAWING NUMBER 1101.03, SHEET 1 OF 9, AND SHEET TMP–2, PERFORM THE FOLLOWING:
– INSTALL ALL ROAD CLOSURE AND DETOUR SIGNING INCLUDING BARRICADES
– CLOSE SR 2128 (BUNCH ROAD)
– PLACE TRAFFIC ONTO OFF– SITE DETOUR

STEP 2: REMOVE EXISTING BRIDGE #106 AND CONSTRUCT THE PROPOSED BRIDGE AND APPROACHES AS SHOWN IN THE CONSTRUCTION PLANS.

STEP 3: INSTALL FINAL PAVEMENT MARKINGS.

STEP 4: REMOVE ALL TRAFFIC CONTROL SIGNING AND DEVICES AND RE–OPEN SR 2128 (BUNCH ROAD) TO THE FINAL TRAFFIC PATTERN.

PAVEMENT MARKING

THERMOPLASTIC WHITE EDGELINE (4")	800 LF
THERMOPLASTIC YELLOW DOUBLE CENTER (4")	800 LF

Ph:56855
R:\Roadway\Proj\B-4958_rdy_tmp.dgn
4/5/2018 12:58:55 PM

DocuSign Envelope ID: 64306EC1-AFC6-42E9-AC54-040BC3D13F6B

PROJECT REFERENCE	SHEET NO.
B-4958 – GUILFORD 106	TMP-2

ROADWAY DESIGN ENGINEER

NORTH CAROLINA PROFESSIONAL SEAL 21102 ENGINEER

3A852B1B327A44...
MOTT MACDONALD I & E, LLC
LICENSE NO. F-0669

DOCUMENT NOT CONSIDERED FINAL UNLESS ALL SIGNATURES COMPLETED

Prepared in the Office of:
MOTT MACDONALD
PO Box 700
Fuquay-Varina, NC 27526
www.mottmac.com/americas

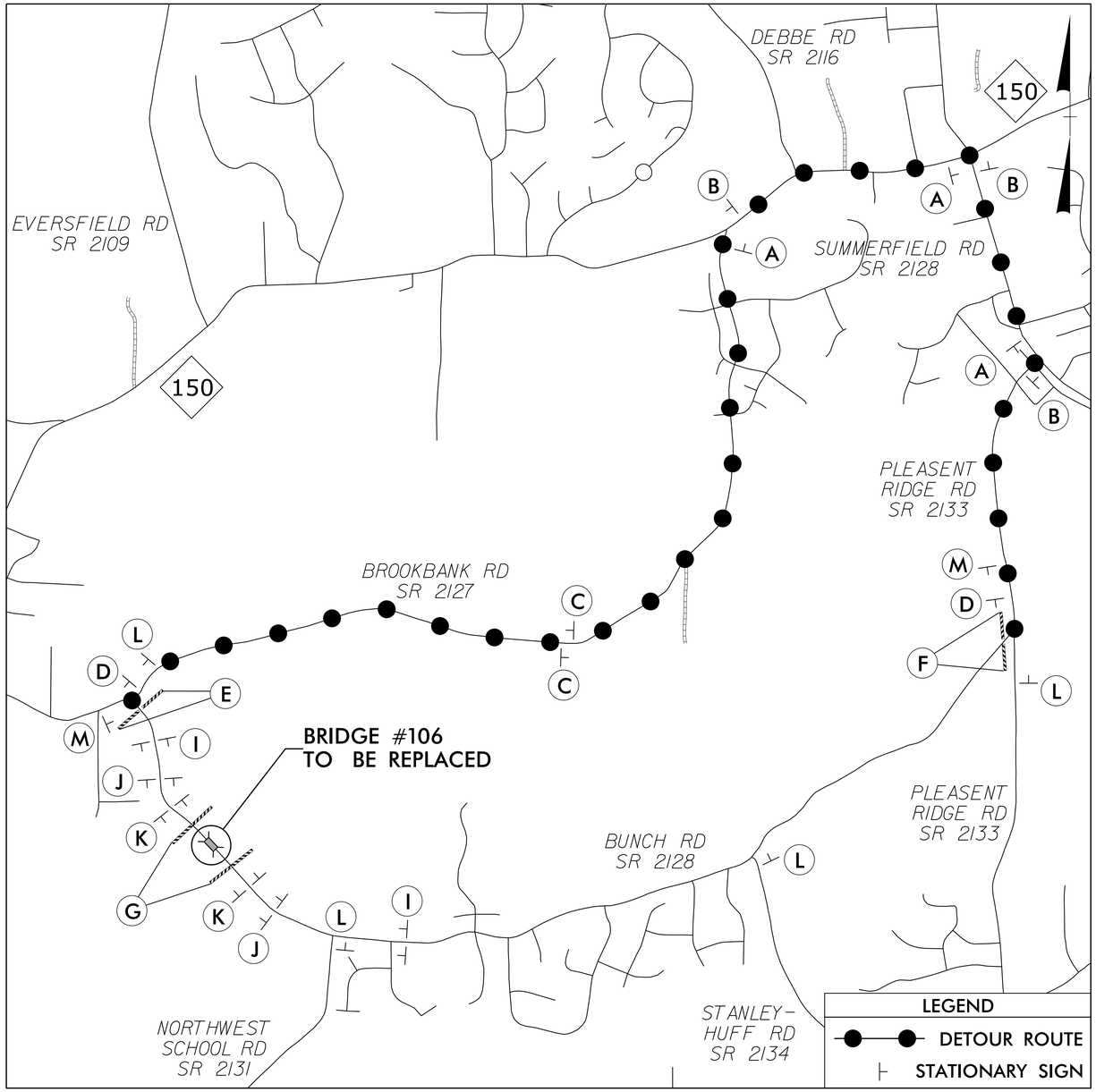

✱ SEE SHEET TMP-3 FOR SPECIAL SIGN DESIGNS

✱ BUNCH ROAD
DETOUR
M4-8
24" X 12"
M6-1 R
21" X 15"
(A)

✱ BUNCH ROAD
DETOUR
M4-8
24" X 12"
M6-1 L
21" X 15"
(B)

✱ BUNCH ROAD
DETOUR
M4-8
24" X 12"
M6-3
21" X 15"
(C)

END DETOUR
M4-8 A
24" X 18"
(D)

R11-4
60" x 30"
ROAD CLOSED TO THRU TRAFFIC
DETOUR
M4-10L
48" x 18"
TYPE III BARRICADE
(E)

R11-3
60" x 30"
ROAD CLOSED 3 MILES AHEAD LOCAL TRAFFIC ONLY
DETOUR
M4-10R
48" x 18"
TYPE III BARRICADE
(F)

R11-2
48" x 30"
ROAD CLOSED
TYPE III BARRICADE(S)
(G)

DETOUR AHEAD
W20-2
48" X 48"
NOT USED (H)

ROAD CLOSED AHEAD
W20-3
48" X 48"
(I)

ROAD CLOSED 1000 FT
W20-3
48" X 48"
(J)

ROAD CLOSED 500 FT
W20-3
48" X 48"
(K)

ROAD CLOSED AHEAD
W20-3
48" X 48"
NEXT LEFT
SP-4L
42" X 12"
(L)

ROAD CLOSED AHEAD
W20-3
48" X 48"
NEXT RIGHT
SP-4R
42" X 12"
(M)

Ph:56855
R:\Roadway\Proj\B-4958_rdy_tmp.dgn
4/5/2018 12:58:56 PM

DocuSign Envelope ID: 64306EC1-AFC6-42E9-AC54-040BC3D13F6B

PROJECT REFERENCE	SHEET NO.
B-4958 – GUILFORD 106	TMP-3

TRAFFIC ENGINEER

NORTH CAROLINA PROFESSIONAL SEAL 032711 ENGINEER RUSSELL W. THOMPSON

Russell W. Thompson 4/20/2018

420DBA78F9E4D...

MOTT MACDONALD I & E, LLC
LICENSE NO. F-0669

DOCUMENT NOT CONSIDERED FINAL UNLESS ALL SIGNATURES COMPLETED

Prepared in the Office of:

MOTT MACDONALD

PO Box 700
Fuquay-Varina, NC 27526
www.mottmac.com/americas

SIGN NUMBER: SD-1
TYPE: D
QUANTITY: SEE PLANS

SIGN WIDTH: 3′-0″
HEIGHT: 2′-6″
TOTAL AREA: 7.5 Sq.Ft.

BORDER TYPE: INSET
RECESS: 0.47″
WIDTH: 0.63″
RADII: 1.5″

NO. Z BARS:
LENGTH:

BACKG COLOR: Fluorescent Orange
COPY COLOR: Black

SYMBOL	X	Y	WID	HT

MAT′L: 0.080″ (2.0 mm) ALUMINUM

DESIGN BY: JW
PROJECT ID: B-4958
CHECKED BY: RWT
DIV: 7
DATE: Jul 20, 2016

USE NOTES: 1,2

1. Legend and border shall be direct applied black non-reflective sheeting.
2. Background shall be NC GRADE B fluoresent orange retroreflective sheeting.

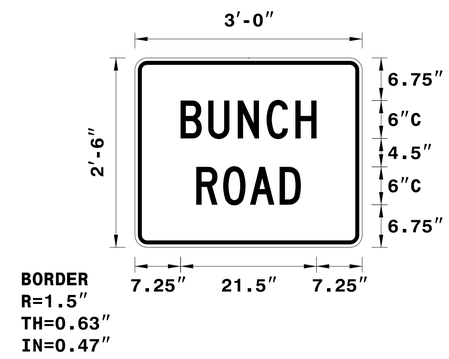

Spacing Factor is 1 unless specified otherwise

LETTER POSITIONS

Letter locations are panel edge to lower left corner

						Series/Size Text Length
	B	U	N	C	H	C 2000
	7.2	11.6	16.3	20.9	25.4	21.5
	R	O	A	D		C 2000
	9.7	14	18.2	22.9		16.6

FILENAME: B-4958_rdy_tmp3

NORTH CAROLINA D.O.T. SIGN DETAIL

Ph15855
R:\Roadway\Proj\B-4958_rdy_tmp3.dgn
4/9/2018 2:46:53 PM

STATE	STATE PROJECT REFERENCE NO.	SHEET NO.	TOTAL SHEETS
N.C.	B-4958	EC-1	

STATE PROJ. NO.	F.A. PROJ. NO.	DESCRIPTION
40150.1.1		P.E.

TIP PROJECT: B-4958

STATE OF NORTH CAROLINA
DIVISION OF HIGHWAYS

PLAN FOR PROPOSED
HIGHWAY EROSION CONTROL

GUILFORD COUNTY

LOCATION: BRIDGE NO. 106 OVER REEDY FORK CREEK ON SR 2128 (BUNCH ROAD)

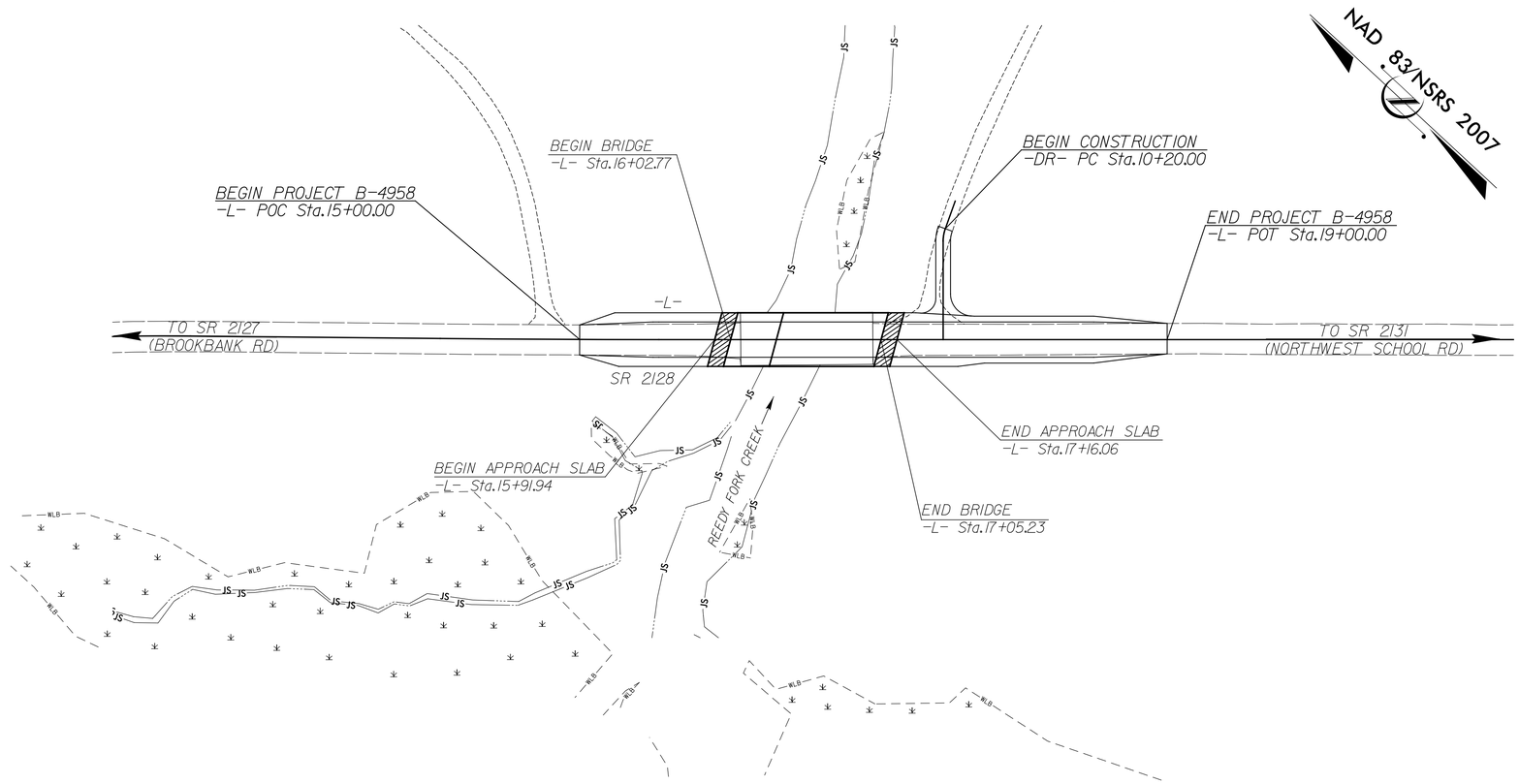

EROSION AND SEDIMENT CONTROL MEASURES

Std. #	Description	Symbol
1630.03	Temporary Silt Ditch	TSD
1630.05	Temporary Diversion	TD
1605.01	Temporary Silt Fence	
1606.01	Special Sediment Control Fence	
1622.01	Temporary Berms and Slope Drains	
1630.02	Silt Basin Type B	
1633.01	Temporary Rock Silt Check Type-A	
	Temporary Rock Silt Check Type-A with Matting and Polyacrylamide (PAM)	
1633.02	Temporary Rock Silt Check Type-B	
	Wattle/ Coir Fiber Wattle	EW CFW
	Wattle/ Coir Fiber Wattle with Polyacrylamide (PAM)	
1634.01	Temporary Rock Sediment Dam Type-A	
1634.02	Temporary Rock Sediment Dam Type-B	
1635.01	Rock Pipe Inlet Sediment Trap Type-A	
1635.02	Rock Pipe Inlet Sediment Trap Type-B	
1630.04	Stilling Basin	
1630.06	Special Stilling Basin	
	Rock Inlet Sediment Trap:	
1632.01	Type A	A
1632.02	Type B	B
1632.03	Type C	C
	Skimmer Basin	
	Tiered Skimmer Basin	
	Infiltration Basin	

THIS PROJECT CONTAINS EROSION CONTROL PLANS FOR CLEARING AND GRUBBING PHASE OF CONSTRUCTION.

THIS PROJECT HAS BEEN DESIGNED TO SENSITIVE WATERSHED STANDARDS.

ENVIRONMENTALLY SENSITIVE AREA(S) EXIST ON THIS PROJECT

Refer To E. C. Special Provisions for Special Considerations.

GRAPHIC SCALE

0
PLANS

0
PROFILE (HORIZONTAL)

0
PROFILE (VERTICAL)

THESE EROSION AND SEDIMENT CONTROL PLANS COMPLY WITH THE REGULATIONS SET FORTH BY THE NCG-010000 GENERAL CONSTRUCTION PERMIT EFFECTIVE AUGUST 1, 2016 AND ISSUED BY THE NORTH CAROLINA DEPARTMENT OF ENVIRONMENT AND NATURAL RESOURCES DIVISION OF WATER RESOURCES.

Prepared In the Office of:

HDR Engineering, Inc. of the Carolinas
555 Fayetteville St, Suite 900 Raleigh, N.C. 27601
N.C.B.E.L.S. License Number: F-0116

Designed by:

ALEXANDER D. SNIDER, P.E. 3064
NAME *LEVEL III CERTIFICATION NO.*

Reviewed In the Office of:

ROADSIDE ENVIRONMENTAL UNIT
1 South Wilmington St.
Raleigh, NC 27611

2018 STANDARD SPECIFICATIONS

Reviewed by:

Aaron A. Harper, EI

Roadway Standard Drawings

The following roadway english standards as appear in "Roadway Standard Drawings"– Roadway Design Unit – N. C. Department of Transportation – Raleigh, N. C., dated January 2018 and the latest revison thereto are applicable to this project and by reference hereby are considered a part of these plans.

1604.01	Railroad Erosion Control Detail	1632.01	Rock Inlet Sediment Trap Type A
1605.01	Temporary Silt Fence	1632.02	Rock Inlet Sediment Trap Type B
1606.01	Special Sediment Control Fence	1632.03	Rock Inlet Sediment Trap Type C
1607.01	Gravel Construction Entrance	1633.01	Temporary Rock Silt Check Type A
1622.01	Temporary Berms and Slope Drains	1633.02	Temporary Rock Silt Check Type B
1630.01	Riser Basin	1634.01	Temporary Rock Sediment Dam Type A
1630.02	Silt Basin Type B	1634.02	Temporary Rock Sediment Dam Type B
1630.03	Temporary Silt Ditch	1635.01	Rock Pipe Inlet Sediment Trap Type A
1630.04	Stilling Basin	1635.02	Rock Pipe Inlet Sediment Trap Type B
1630.05	Temporary Diversion	1640.01	Coir Fiber Baffle
1630.06	Special Stilling Basin	1645.01	Temporary Stream Crossing
1631.01	Matting Installation		

4/12/2018
jsnider:O:\DC\B-4958\Hydraulics\Erosion Control\coddrB-4958_hyd_erosion_control_1.dgn
jsnider:Engineering Office of The Carolinas

PROJECT REFERENCE NO.	SHEET NO.
B-4958	EC-2
R/W SHEET NO.	

COIR FIBER WATTLE WITH POLYACRYLAMIDE (PAM) DETAIL

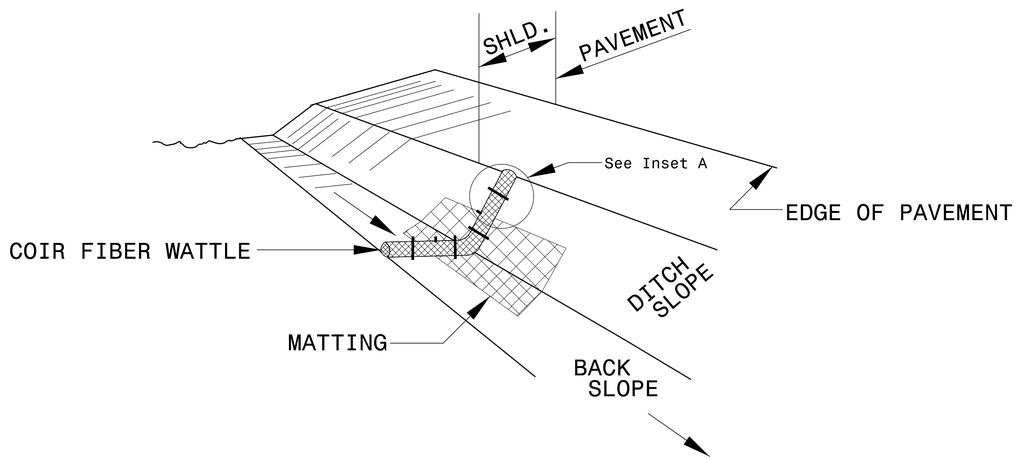

ISOMETRIC VIEW

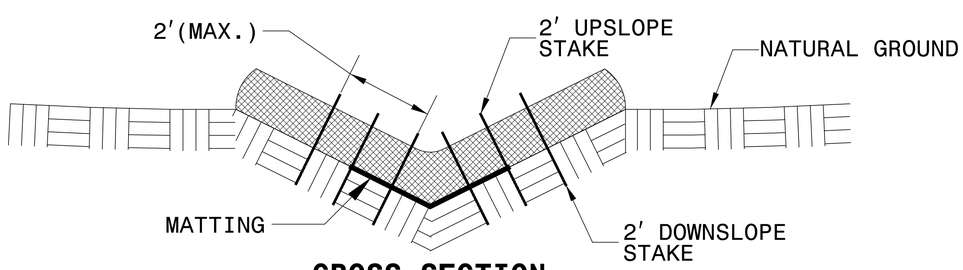

CROSS SECTION VEE DITCH

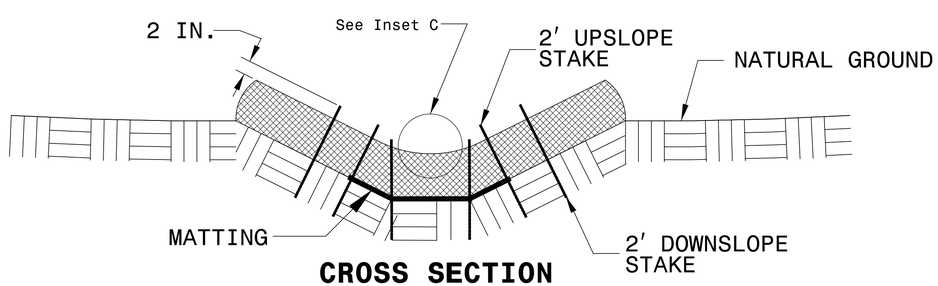

CROSS SECTION TRAPEZOIDAL DITCH

NOTES:

USE MINIMUM 12 IN. DIAMETER COIR FIBER (COCONUT FIBER) WATTLE.

USE 2 FT. WOODEN STAKES WITH A 2 IN. BY 2 IN. NOMINAL CROSS SECTION.

ONLY INSTALL WATTLE(S) TO A HEIGHT IN DITCH SO FLOW WILL NOT WASH AROUND WATTLE AND SCOUR DITCH SLOPES AND AS DIRECTED.

INSTALL A MINIMUM OF 2 UPSLOPE STAKES AND 4 DOWNSLOPE STAKES AT AN ANGLE TO WEDGE WATTLE TO BOTTOM OF DITCH.

PROVIDE STAPLES MADE OF 0.125 IN. DIAMETER STEEL WIRE FORMED INTO A U SHAPE NOT LESS THAN 12" IN LENGTH.

INSTALL STAPLES APPROXIMATELY EVERY 1 LINEAR FOOT ON BOTH SIDES OF WATTLE AND AT EACH END TO SECURE IT TO THE SOIL.

INSTALL MATTING IN ACCORDANCE WITH SECTION 1631 OF THE STANDARD SPECIFICATIONS.

PRIOR TO POLYACRYLAMIDE (PAM) APPLICATION, OBTAIN A SOIL SAMPLE FROM PROJECT LOCATION, AND FROM OFFSITE MATERIAL, AND ANALYZE FOR APPROPRIATE PAM FLOCCULANT TO BE APPLIED TO EACH WATTLE.

INITIALLY APPLY 2 OUNCES OF ANIONIC OR NEUTRALLY CHARGED PAM OVER WATTLE WHERE WATER WILL FLOW AND 1 OUNCE OF PAM ON MATTING ON EACH SIDE OF WATTLE. REAPPLY PAM AFTER EVERY RAINFALL EVENT THAT IS EQUAL TO OR EXCEEDS 0.50 IN.

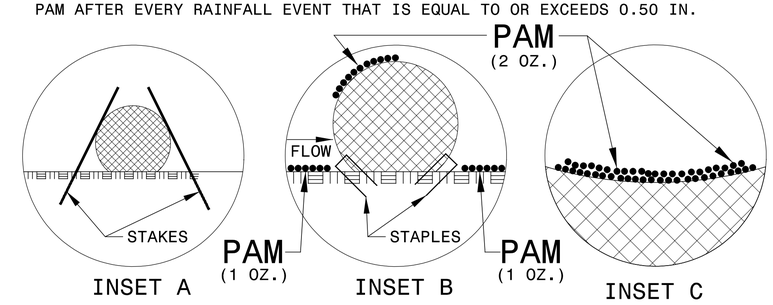

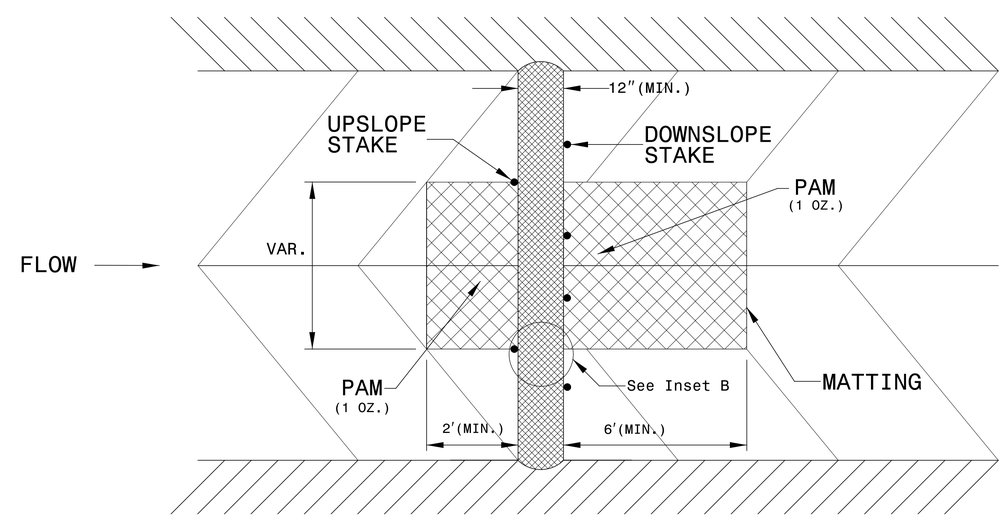

TOP VIEW

PROJECT REFERENCE NO.	SHEET NO.
B-4958	EC-2A
R/W SHEET NO.	

TEMPORARY ROCK SILT CHECK TYPE 'A' WITH EXCELSIOR MATTING AND POLYACRYLAMIDE (PAM)

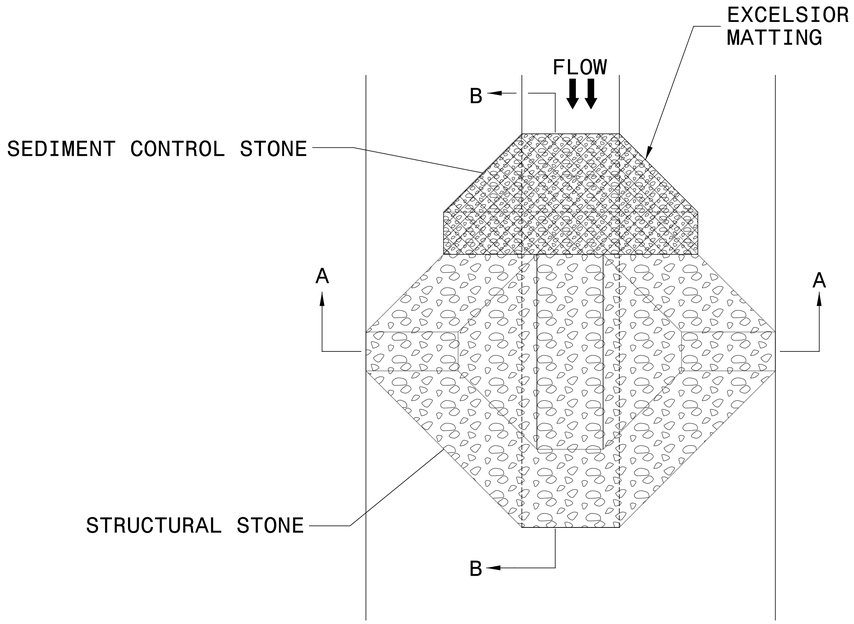

PLAN

NOTES:

INSTALL TEMPORARY ROCK SILT CHECK TYPE A IN ACCORDANCE WITH ROADWAY STANDARD DRAWING NO. 1633.01.

USE EXCELSIOR FOR MATTING MATERIAL AND ANCHOR MATTING SECTION AT TOP AND BOTTOM WITH CLASS B STONE.

PRIOR TO POLYACRYLAMIDE (PAM) APPLICATION, OBTAIN A SOIL SAMPLE FROM PROJECT LOCATION, AND FROM OFFSITE MATERIAL, AND ANALYZE FOR APPROPRIATE PAM FLOCCULANT TO BE APPLIED TO EACH ROCK SILT CHECK.

INITIALLY APPLY 4 OUNCES OF POLYACRYLAMIDE (PAM) TO TOP OF MATTING SECTION AND AFTER EVERY RAINFALL EVENT THAT EQUALS OR EXCEEDS 0.50 INCHES.

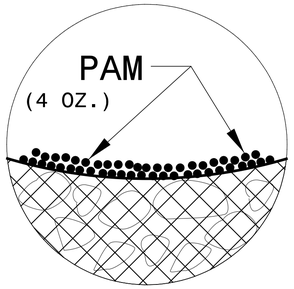

INSET A

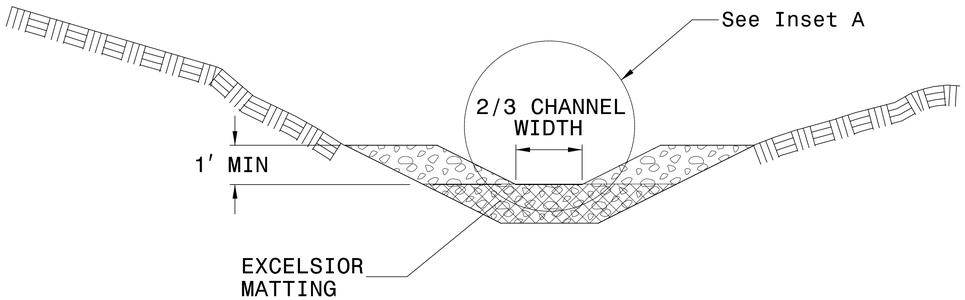

SECTION A-A

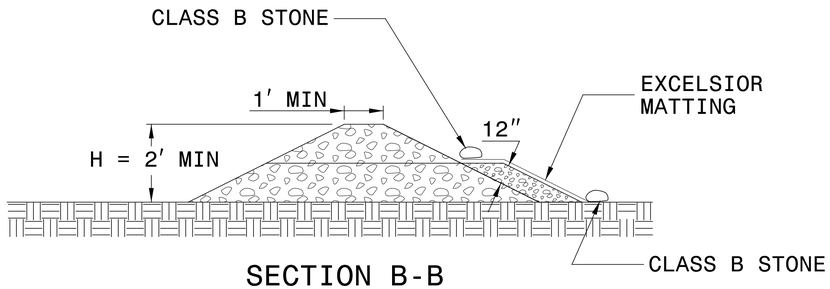

SECTION B-B

NOT TO SCALE

PROJECT REFERENCE NO.	SHEET NO.
B-4958	EC-3

DIVISION OF HIGHWAYS
STATE OF NORTH CAROLINA

SOIL STABILIZATION SUMMARY SHEET

MATTING FOR EROSION CONTROL

CONST SHEET NO.	LINE	FROM STATION	TO STATION	SIDE	ESTIMATE (SY)
4	-L-	16+89	18+77	RT	160
4	-L-	17+61	18+88	LT	165
				SUBTOTAL	325
MISCELLANEOUS MATTING TO BE INSTALLED AS DIRECTED BY THE ENGINEER					7585
				TOTAL	7910
				SAY	7910

MATTING FOR EROSION CONTROL

CONST SHEET NO.	LINE	FROM STATION	TO STATION	SIDE	ESTIMATE (SY)

PROJECT REFERENCE NO.	SHEET NO.
B-4958	EC-3A

DIVISION OF HIGHWAYS
STATE OF NORTH CAROLINA

SOIL STABILIZATION TIMEFRAMES

SITE DESCRIPTION	STABILIZATION TIME	TIMEFRAME EXCEPTIONS
PERIMETER DIKES, SWALES, DITCHES AND SLOPES	7 DAYS	NONE
HIGH QUALITY WATER (HQW) ZONES	7 DAYS	NONE
SLOPES STEEPER THAN 3:1	7 DAYS	IF SLOPES ARE 10' OR LESS IN LENGTH AND ARE NOT STEEPER THAN 2:1, 14 DAYS ARE ALLOWED.
SLOPES 3:1 OR FLATTER	14 DAYS	7 DAYS FOR SLOPES GREATER THAN 50' IN LENGTH.
ALL OTHER AREAS WITH SLOPES FLATTER THAN 4:1	14 DAYS	NONE, EXCEPT FOR PERIMETERS AND HQW ZONES.

PROJECT REFERENCE	SHEET NO.
B-4958- GUILFORD 106	EC-04/CONST.04

ROADSIDE ENVIRONMENTAL PROJECT ENGINEER

LEVEL III CERTIFIED BY:
ALEXANDER D SNIDER, PE
CERTIFICATION NUMBER: 3064
ISSUED: FEBRUARY 23, 2017

HDR Engineering, Inc. of the Carolinas
555 Fayetteville St. Suite 900 Raleigh, N.C. 27601
N.C.B.E.L.S. License Number: F-0116

Prepared in the Office of:
MOTT MACDONALD
PO Box 700
Fuquay-Varina, NC 27526
www.mottmac.com/americas

VERTICAL SCALE 5' 0 5' 10'
HORIZONTAL SCALE 25' 0 25' 50'

CLEARING AND GRUBBING
EROSION CONTROL FOR
CONSTRUCTION SHEET 04

DETAIL A
TOE PROTECTION
(Not to Scale)

d = 1 Ft.
b = 2 Ft.
Type of Liner = CLASS B Rip-Rap
-L- STA. 15+20 TO 15+95 LT

DETAIL B
STANDARD BASE DITCH
(Not to Scale)

Type of Liner = CLASS I Rip-Rap
-L- STA. 16+83 TO 17+05 LT
-L- STA. 16+65 TO 16+90 RT

DETAIL C
RIP RAP AT EMBANKMENT
(Not to Scale)

Type of Liner = CL II Rip-Rap
-L- STA. 16+80 LT
-L- STA. 16+62 RT

ENVIRONMENTALLY SENSITIVE AREA
SEE PROJECT SPECIAL PROVISIONS

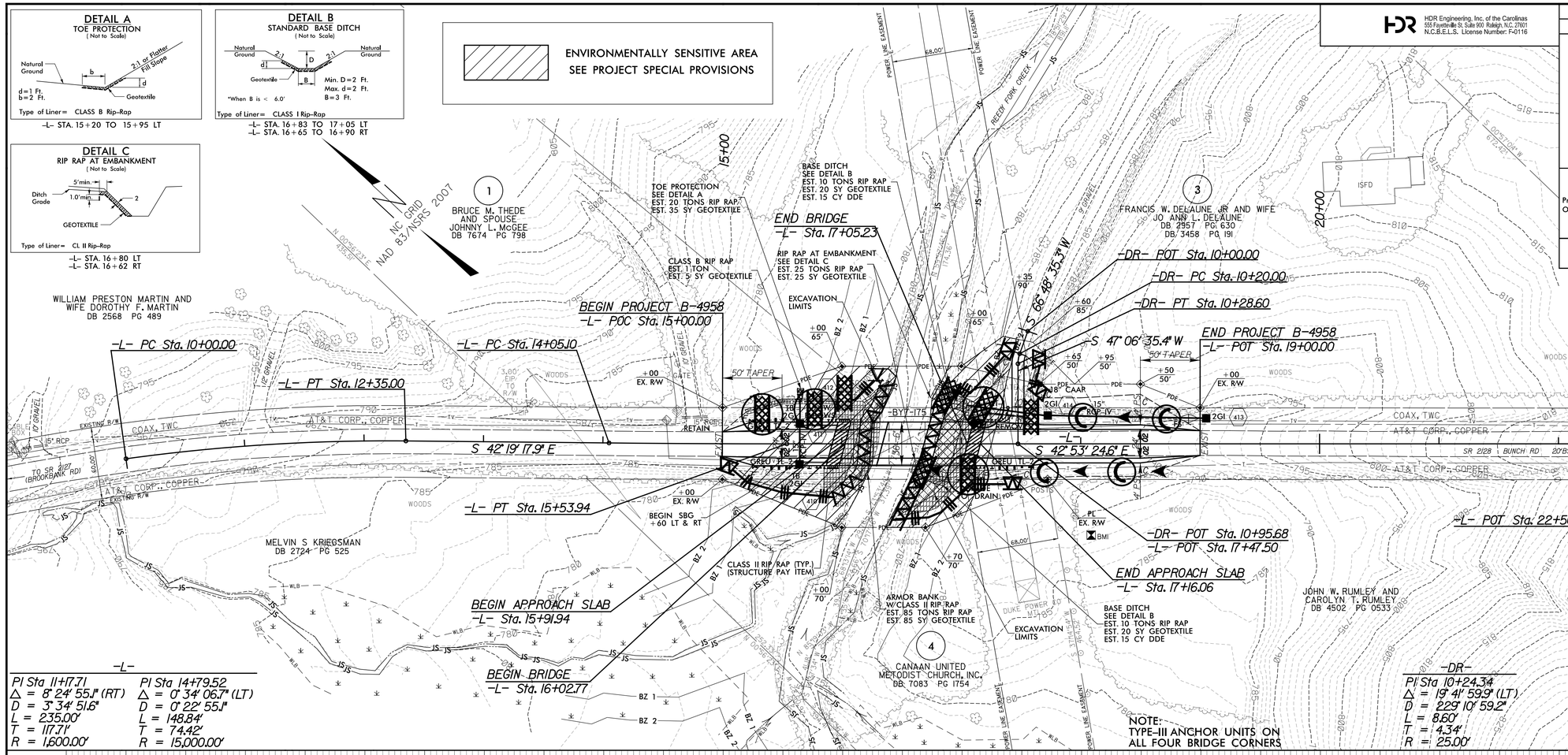

-L-

PI Sta 11+17.71
Δ = 8° 24' 55.1" (RT)
D = 3° 34' 51.6"
L = 235.00'
T = 117.71'
R = 1,600.00'

PI Sta 14+79.52
Δ = 0° 34' 06.7" (LT)
D = 0° 22' 55.1"
L = 148.84'
T = 74.42'
R = 15,000.00'

-DR-

PI Sta 10+24.34
Δ = 19° 41' 59.9" (LT)
D = 229° 10' 59.2"
L = 8.60'
T = 4.34'
R = 25.00'

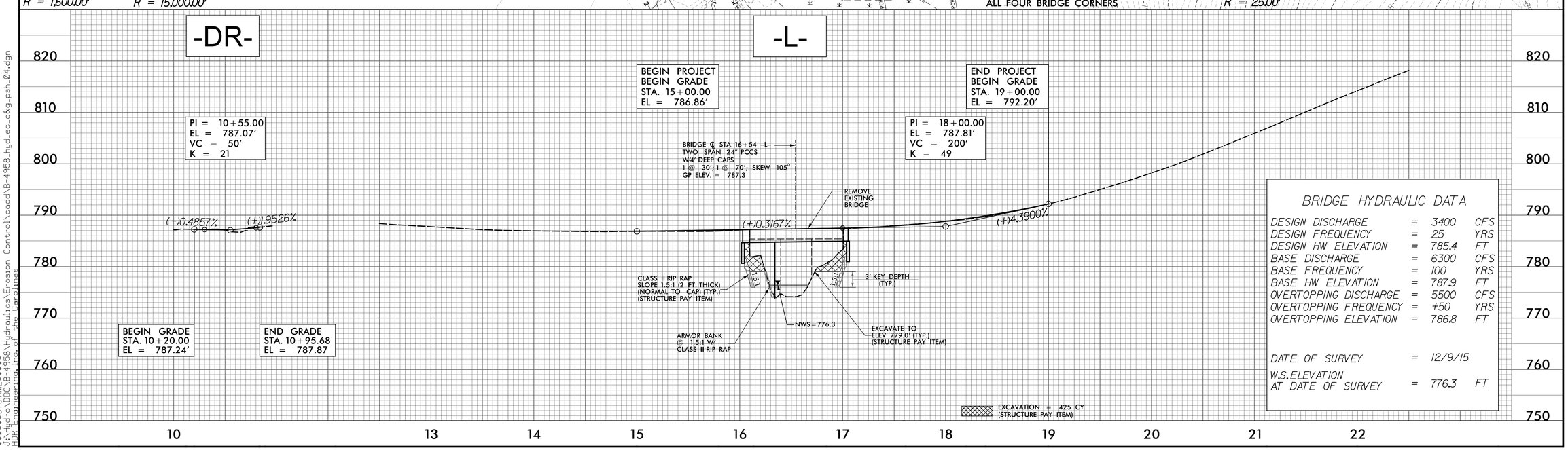

BRIDGE HYDRAULIC DATA

DESIGN DISCHARGE	=	3400	CFS
DESIGN FREQUENCY	=	25	YRS
DESIGN HW ELEVATION	=	785.4	FT
BASE DISCHARGE	=	6300	CFS
BASE FREQUENCY	=	100	YRS
BASE HW ELEVATION	=	787.9	FT
OVERTOPPING DISCHARGE	=	5500	CFS
OVERTOPPING FREQUENCY	=	+50	YRS
OVERTOPPING ELEVATION	=	786.8	FT
DATE OF SURVEY	=	12/9/15	
W.S. ELEVATION AT DATE OF SURVEY	=	776.3	FT

4/12/2018
$$$$$$$Y$TIME$$$$$
J:\Hydro\DDC\B-4958\Hydraulics\Erosion Control\cadd\B-4958_hyd_ec_c&g_psh_04.dgn
HDR Engineering, Inc. of the Carolinas

HDR Engineering, Inc. of the Carolinas
555 Fayetteville St, Suite 900 Raleigh, N.C. 27601
N.C.B.E.L.S. License Number: F-0116

ROADSIDE ENVIRONMENTAL PROJECT ENGINEER

LEVEL III CERTIFIED BY:
ALEXANDER D SNIDER, PE
CERTIFICATION NUMBER: 3064
ISSUED: FEBRUARY 23, 2017

Prepared in the Office of: MOTT MACDONALD, PO Box 700, Fuquay-Varina, NC 27526, www.mottmac.com/americas

VERTICAL SCALE 5' 0 5' 10'
HORIZONTAL SCALE 25' 0 25' 50'

FINAL EROSION CONTROL FOR CONSTRUCTION SHEET 04

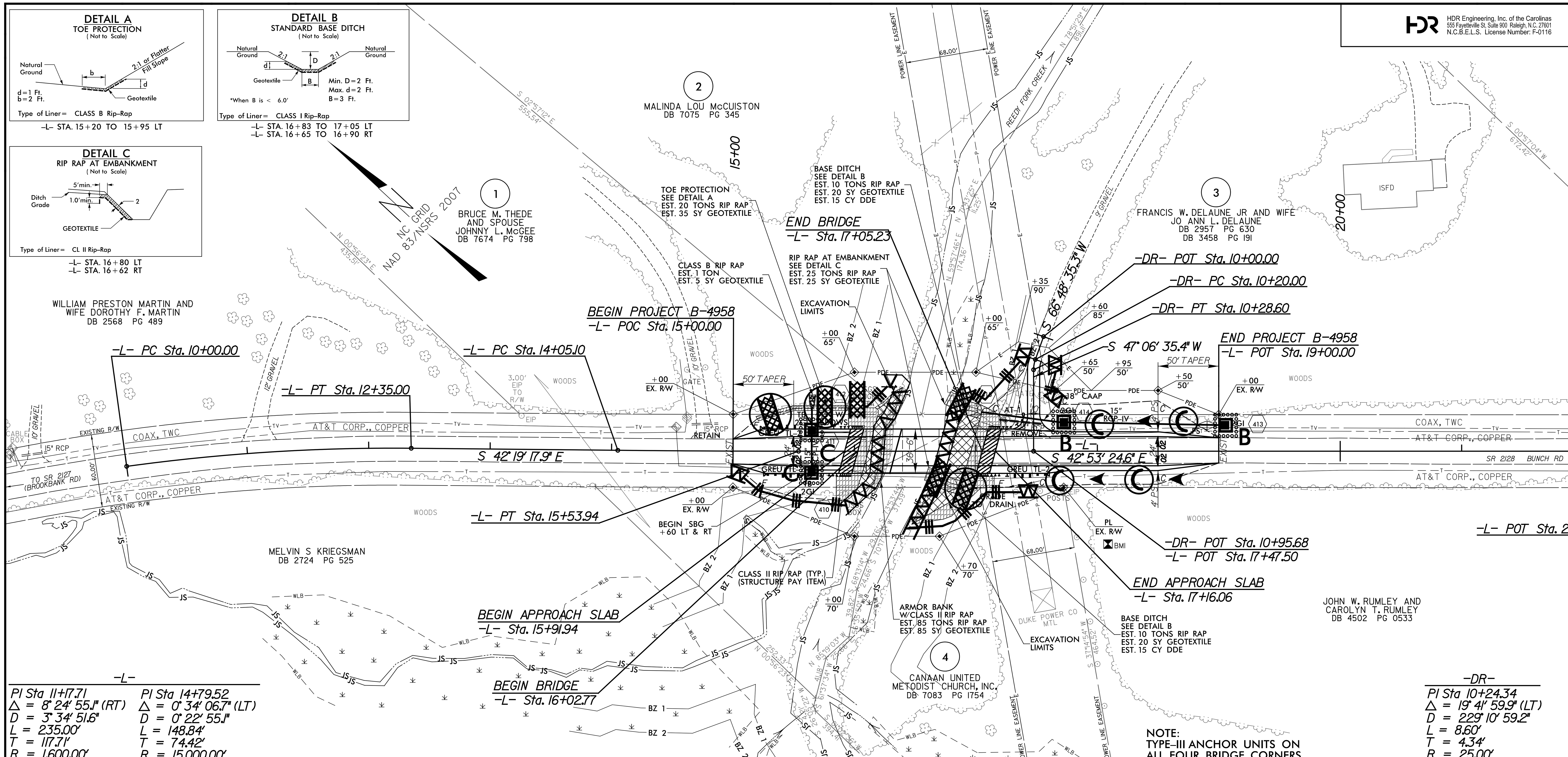

-L-

PI Sta 11+17.71	PI Sta 14+79.52
Δ = 8° 24' 55.1" (RT)	Δ = 0° 34' 06.7" (LT)
D = 3° 34' 51.6"	D = 0° 22' 55.1"
L = 235.00'	L = 148.84'
T = 117.71'	T = 74.42'
R = 1,600.00'	R = 15,000.00'

-DR-

PI Sta 10+24.34
Δ = 19° 41' 59.9" (LT)
D = 229° 10' 59.2"
L = 8.60'
T = 4.34'
R = 25.00'

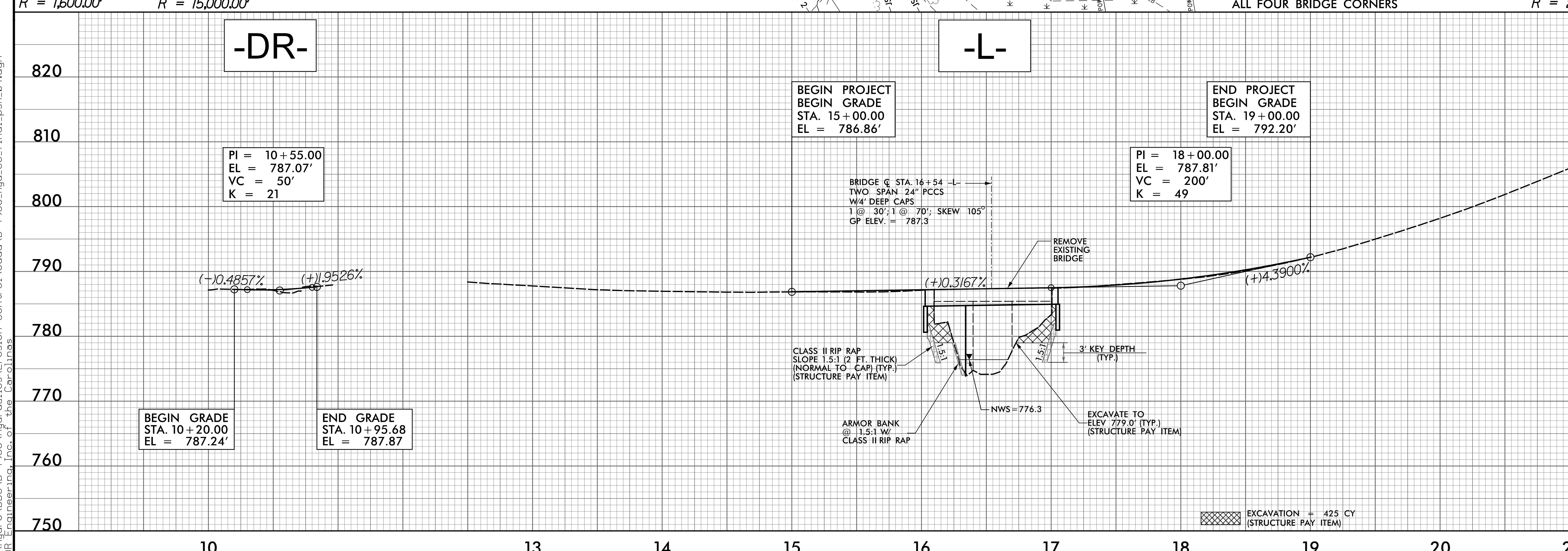

BRIDGE HYDRAULIC DATA

DESIGN DISCHARGE	=	3400	CFS
DESIGN FREQUENCY	=	25	YRS
DESIGN HW ELEVATION	=	785.4	FT
BASE DISCHARGE	=	6300	CFS
BASE FREQUENCY	=	100	YRS
BASE HW ELEVATION	=	787.9	FT
OVERTOPPING DISCHARGE	=	5500	CFS
OVERTOPPING FREQUENCY	=	+50	YRS
OVERTOPPING ELEVATION	=	786.8	FT
DATE OF SURVEY	=	12/9/15	
W.S. ELEVATION AT DATE OF SURVEY	=	776.3	FT

4/12/2018
J:\Hydro\DDC\B-4958\Hydraulics\Erosion Control\cadd\B-4958_hyd_ec_final_psh_04.dgn
$$$$$$SYSTIME$$$$$
HDR Engineering, Inc. of the Carolinas

STATE	STATE PROJECT REFERENCE NO.	SHEET NO.	TOTAL SHEETS
N.C.	B–4958	RF–1	
STATE PROJ. NO.	F. A. PROJ. NO.	DESCRIPTION	

PLANTING DETAILS

SEEDLING / LINER BAREROOT PLANTING DETAIL

HEALING IN

1. Locate a healing-in site in a shady, well protected area.

2. Excavate a flat bottom trench 12 inches deep and provide drainage.

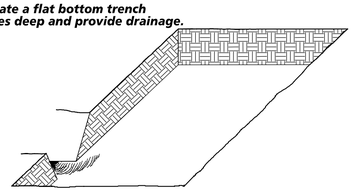

3. Backfill the trench with 2 inches well rotted sawdust. Place a 2 inch layer of well rotted sawdust at a sloping angle at one end of the trench.

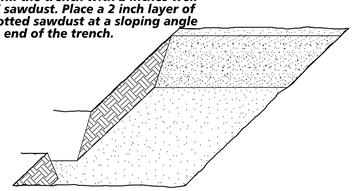

4. Place a single layer of plants against the sloping end so that the root collar is at ground level.

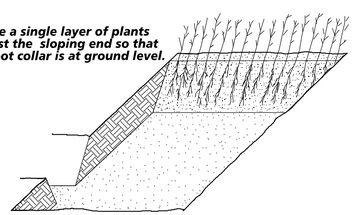

5. Place a 2 inch layer of well rotted sawdust over the roots maintaining a sloping angle.

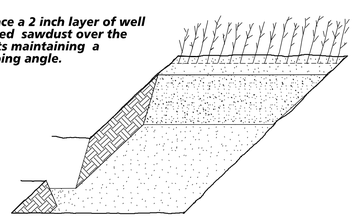

6. Repeat layers of plants and sawdust as necessary and water thoroughly.

DIBBLE PLANTING METHOD
USING THE KBC PLANTING BAR

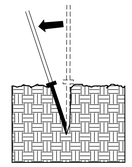

1. Insert planting bar as shown and pull handle toward planter.

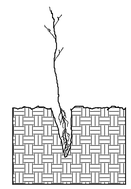

2. Remove planting bar and place seedling at correct depth.

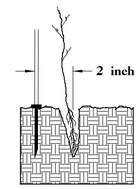

3. Insert planting bar 2 inches toward planter from seedling.

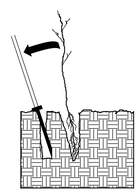

4. Pull handle of bar toward planter, firming soil at bottom.

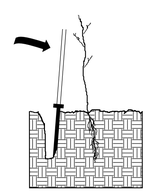

5. Push handle forward firming soil at top.

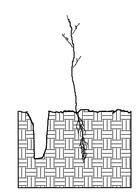

6. Leave compaction hole open. Water thoroughly.

PLANTING NOTES:

PLANTING BAG
During planting, seedlings shall be kept in a moist canvas bag or similar container to prevent the root systems from drying.

KBC PLANTING BAR
Planting bar shall have a blade with a triangular cross section, and shall be 12 inches long, 4 inches wide and 1 inch thick at center.

ROOT PRUNING
All seedlings shall be root pruned, if necessary, so that no roots extend more than 10 inches below the root collar.

REFORESTATION

☐ *TREE REFORESTATION SHALL BE PLANTED 6 FT. TO 10 FT. ON CENTER, RANDOM SPACING, AVERAGING 8 FT. ON CENTER, APPROXIMATELY 680 PLANTS PER ACRE.*

REFORESTATION

MIXTURE, TYPE, SIZE, AND FURNISH SHALL CONFORM TO THE FOLLOWING:

25% LIRIODENDRON TULIPIFERA	*TULIP POPLAR*	*12 in - 18 in BR*
25% PLATANUS OCCIDENTALIS	*AMERICAN SYCAMORE*	*12 in - 18 in BR*
25% FRAXINUS PENNSYLVANICA	*GREEN ASH*	*12 in - 18 in BR*
25% BETULA NIGRA	*RIVER BIRCH*	*12 in - 18 in BR*

REFORESTATION DETAIL SHEET

N.C.D.O.T. - ROADSIDE ENVIRONMENTAL UNIT

PROJECT REFERENCE	SHEET NO.
B-4958- GUILFORD 106	UO-1

Prepared in the Office of:

THE WOOTEN COMPANY
LICENSE NO. F-0115

THE WOOTEN COMPANY
120 North Boylan Avenue Raleigh NC 27603-1423
919.828.0531 fax 919.834.3589
License Number: F-0115

DOCUMENT NOT CONSIDERED FINAL UNLESS ALL SIGNATURES COMPLETED

GRAPHIC SCALE 25' 0 25' 50'

DETAIL A
TOE PROTECTION
(Not to Scale)

Type of Liner= CLASS B Rip-Rap

-L- STA. 15+20 TO 15+95 LT

DETAIL B
STANDARD BASE DITCH
(Not to Scale)

Type of Liner= CLASS I Rip-Rap

-L- STA. 16+83 TO 17+05 LT
-L- STA. 16+65 TO 16+90 RT

DETAIL C
RIP RAP AT EMBANKMENT
(Not to Scale)

Type of Liner= CL II Rip-Rap

-L- STA. 16+80 LT
-L- STA. 16+62 RT

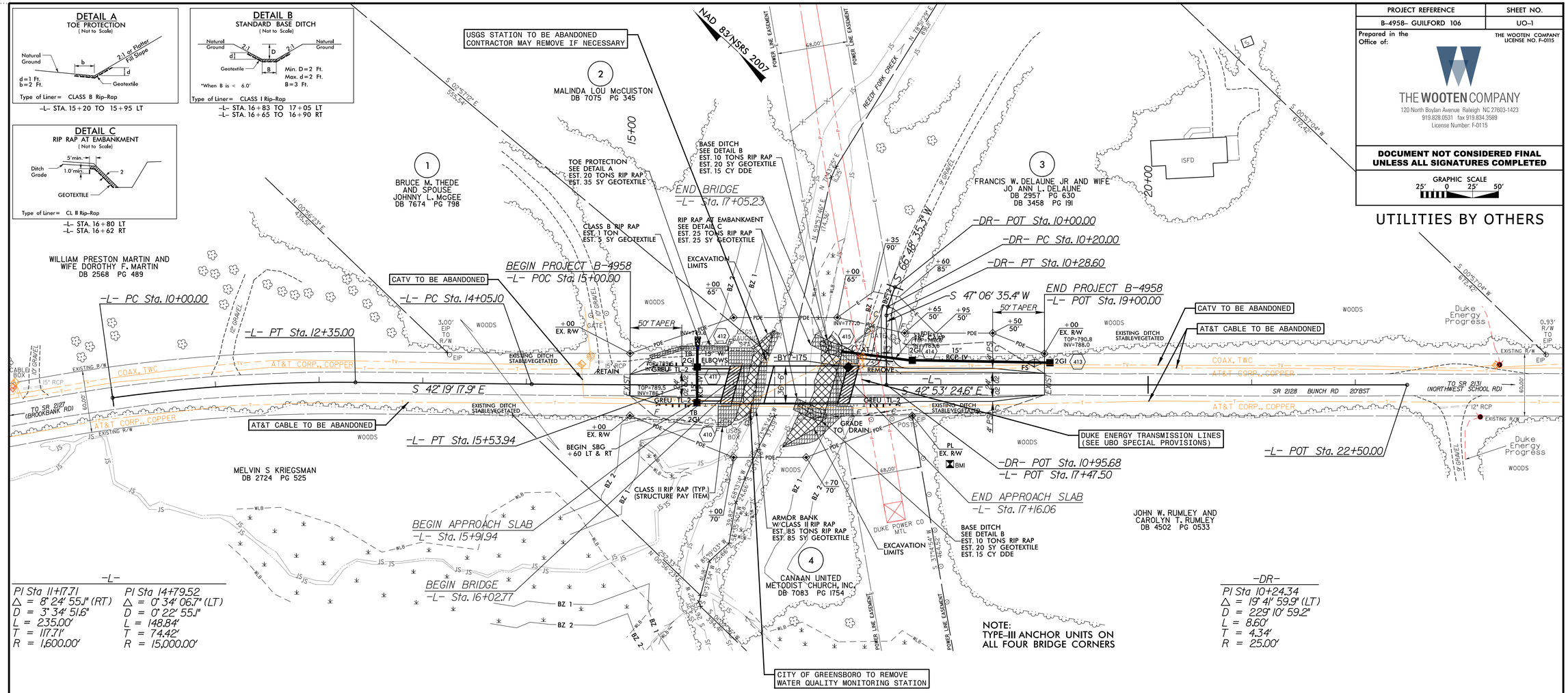

-L-

PI Sta 11+17.71
△ = 8° 24' 55.1" (RT)
D = 3° 34' 51.6"
L = 235.00'
T = 117.71'
R = 1,600.00'

PI Sta 14+79.52
△ = 0° 34' 06.7" (LT)
D = 0° 22' 55.1"
L = 148.84'
T = 74.42'
R = 15,000.00'

-DR-

PI Sta 10+24.34
△ = 19° 41' 59.9" (LT)
D = 229° 10' 59.2"
L = 8.60'
T = 4.34'
R = 25.00'

0 5 10	PROJECT REFERENCE	SHEET NO.
	B-4958 - GUILFORD 106	X-1

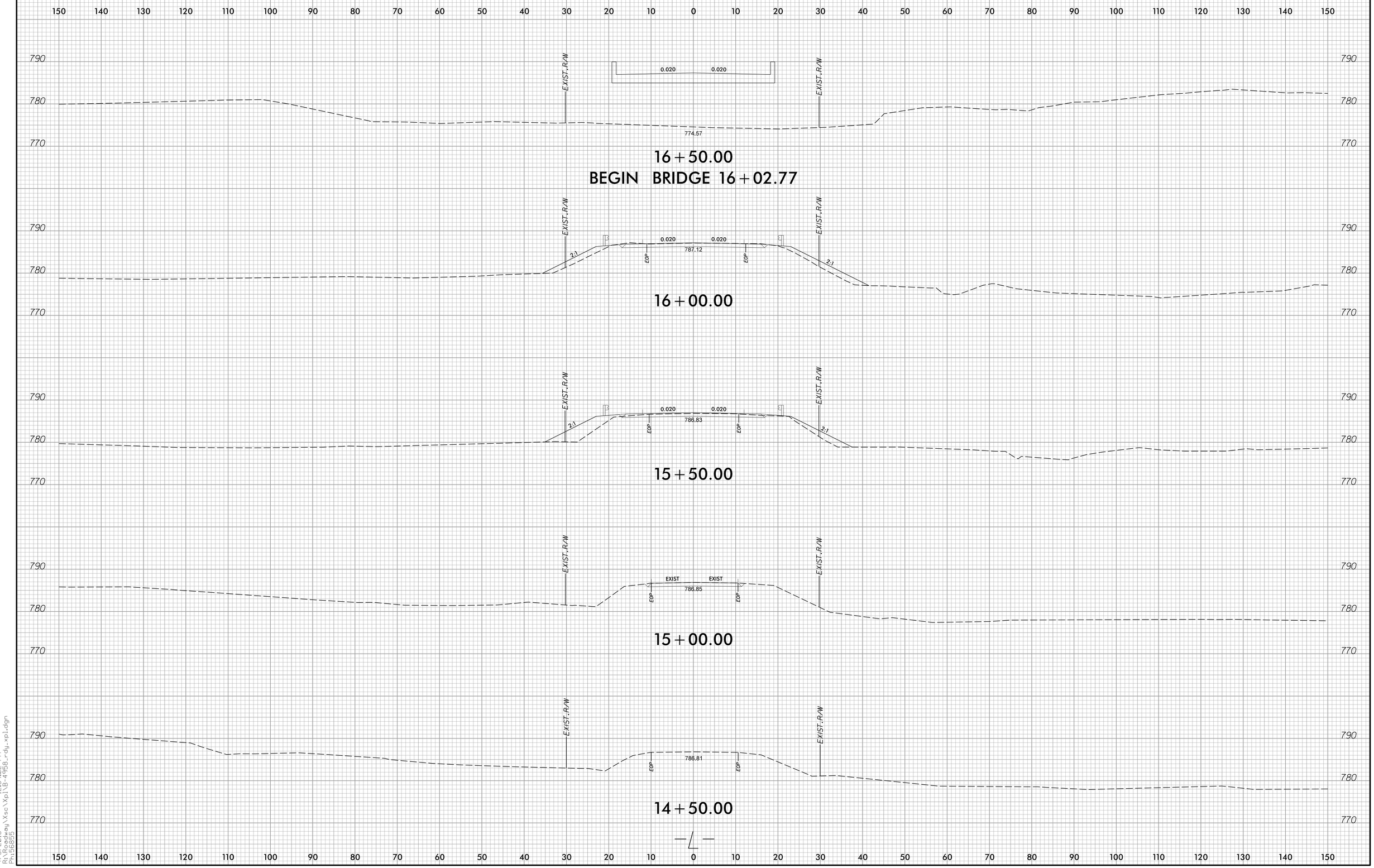

4/5/2018 12:59:02 PM
R:\Roadway\Xsc\Xpl\B-4958_rdy_xpl.dgn
Ph:56855

0 5 10	PROJECT REFERENCE	SHEET NO.
	B-4958 - GUILFORD 106	X-2

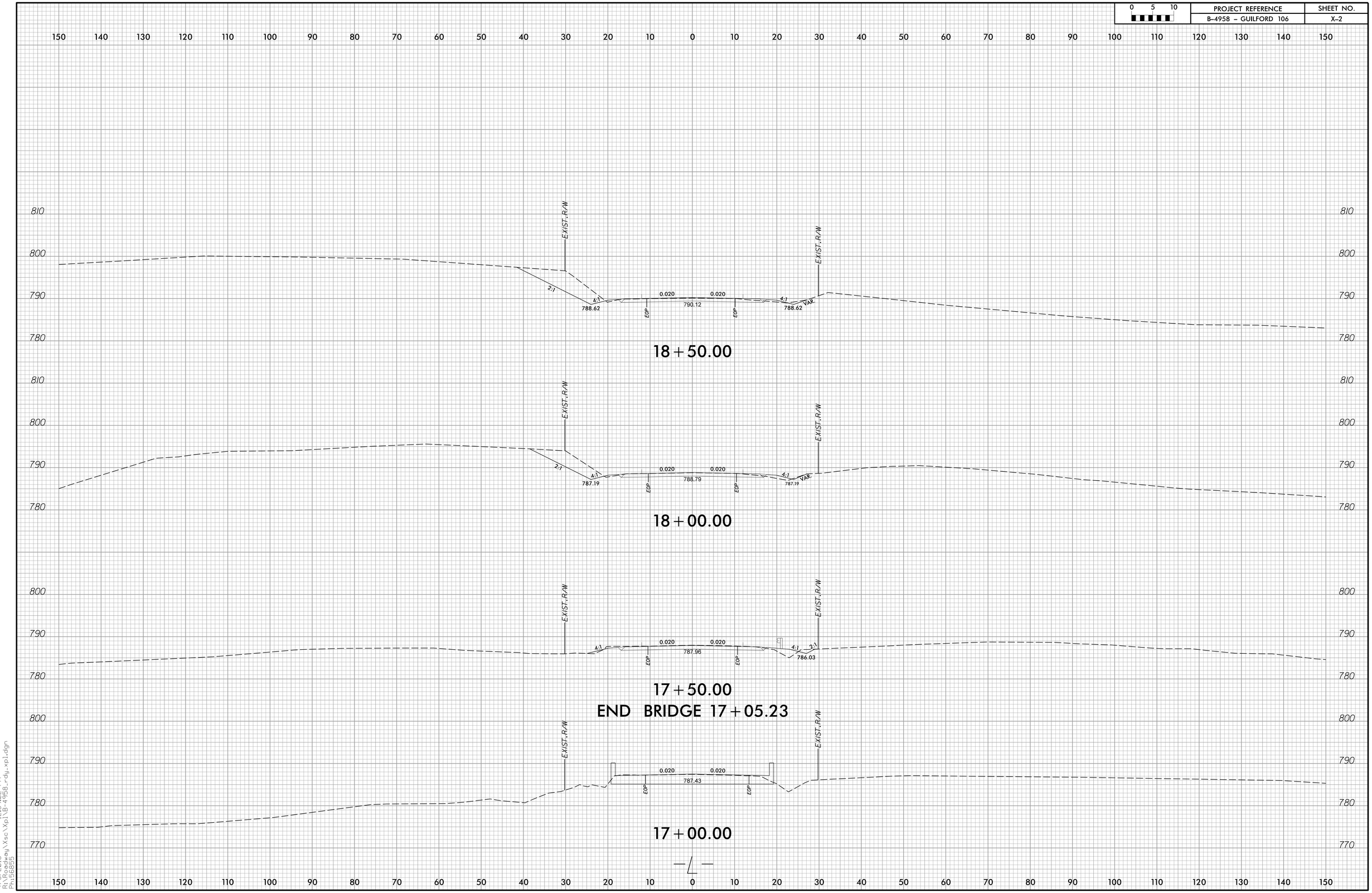

4/5/2018 12:59:02 PM
R:\Roadway\Xsc\Xpl\B-4958_rdy_xpl.dgn
Ph:56855

0 5 10	PROJECT REFERENCE	SHEET NO.
	B-4958 - GUILFORD 106	X-3

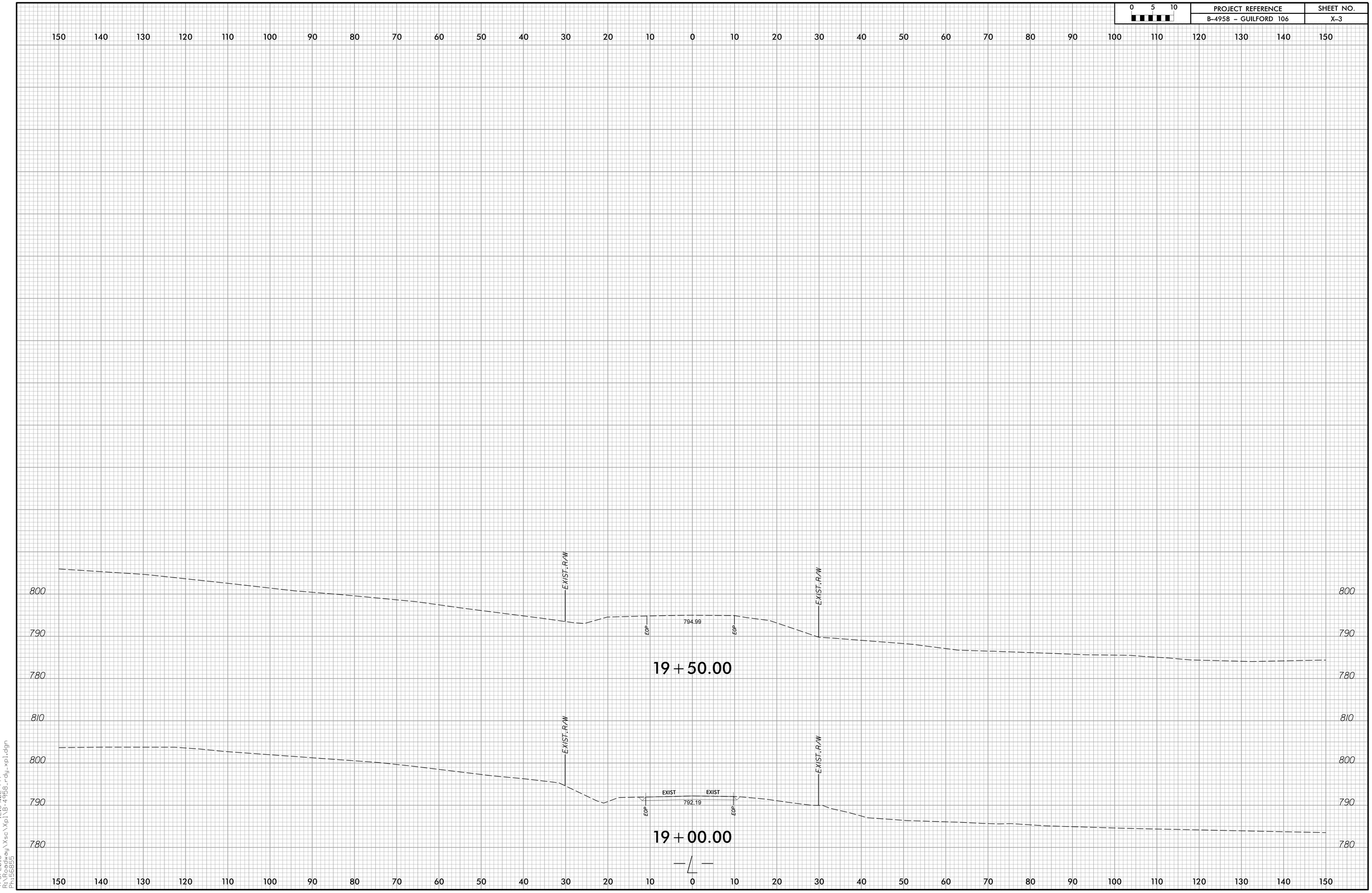

4/5/2018 12:59:02 PM
R:\Roadway\Xsc\Xpl\B-4958_rdy_xpl.dgn
Ph:56855

0 55 100	PROJECT REFERENCE	SHEET NO.
	B-4958 - GUILFORD 106	X-4

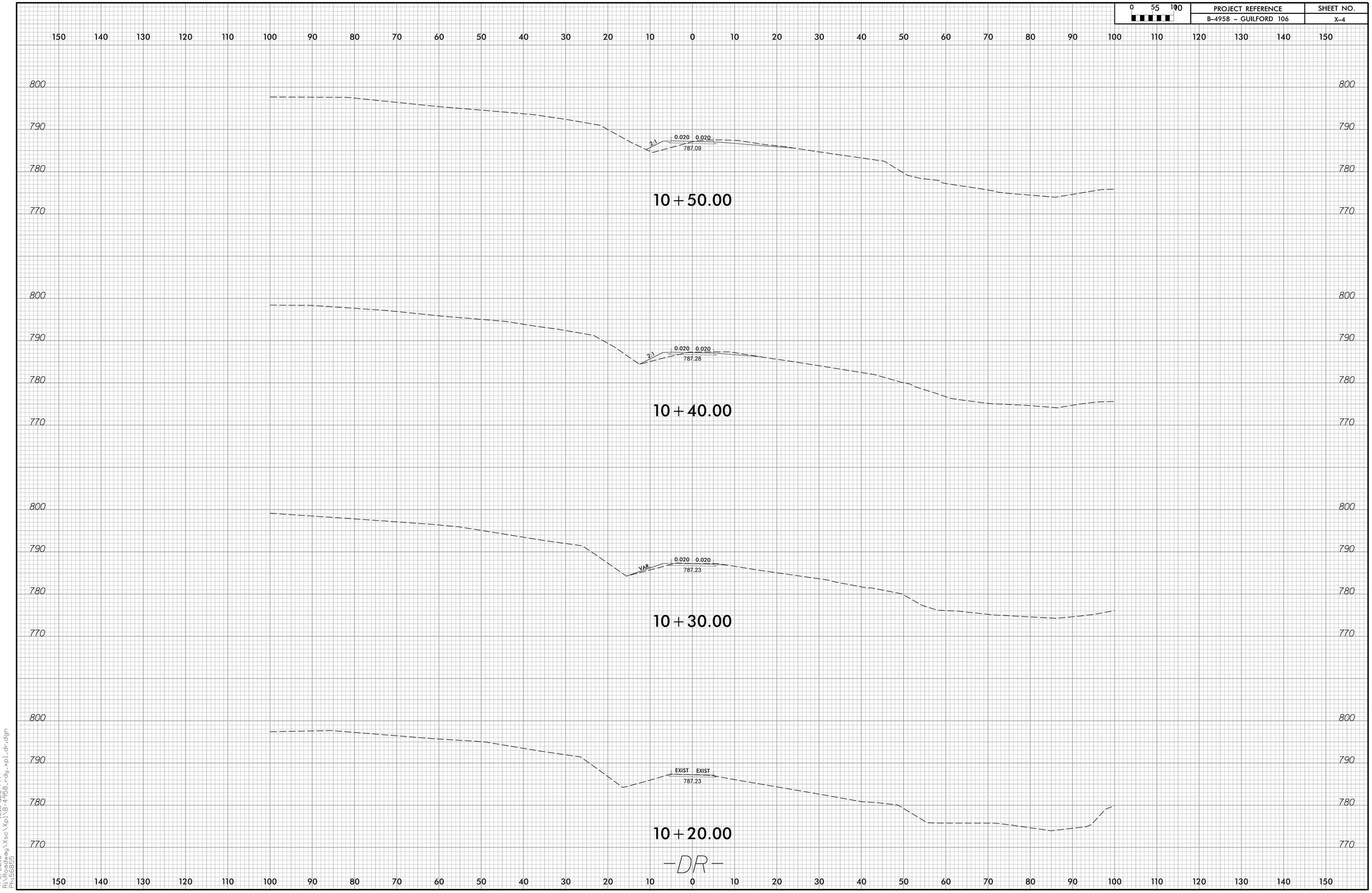

4/5/2018 12:59:06 PM
R:\Roadway\Xsc\Xpl\B-4958_rdy_xpl_dr.dgn
Ph:56855

PROJECT REFERENCE	SHEET NO.
B-4958 - GUILFORD 106	X-5

4/5/2018 12:59:06 PM
R:\Roadway\Xsc\Xpl\B-4958_rdy_xpl_dr.dgn
Ph:56855

DocuSign Envelope ID: 6DEB83C1-BD30-4262-8F7C-6FB53D85B375

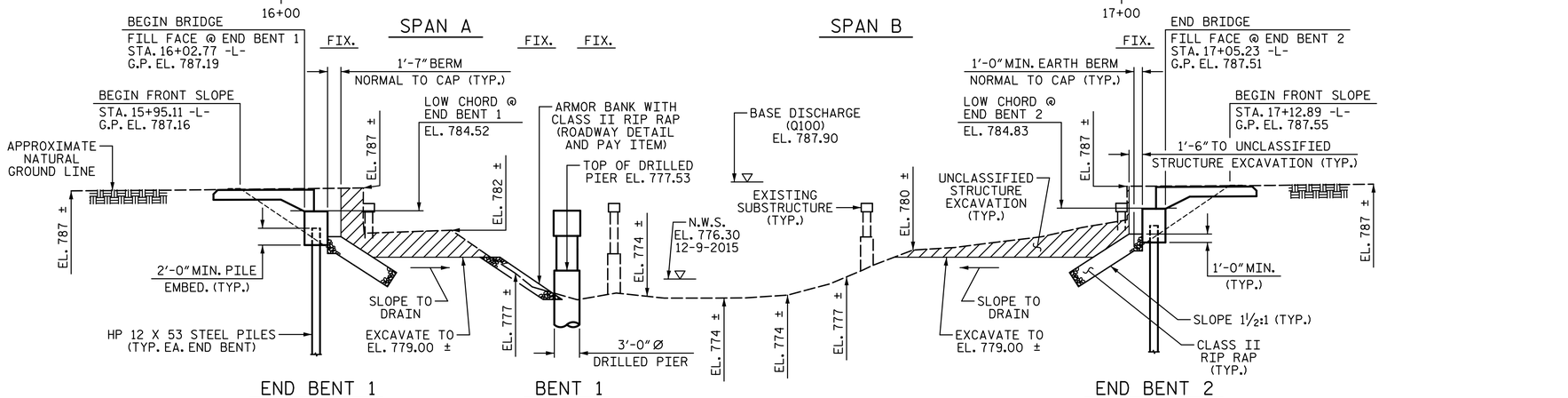

SECTION ALONG ℄ SURVEY -L-

(SECTIONS @ END BENTS AND BENT ARE @ RIGHT ANGLES)

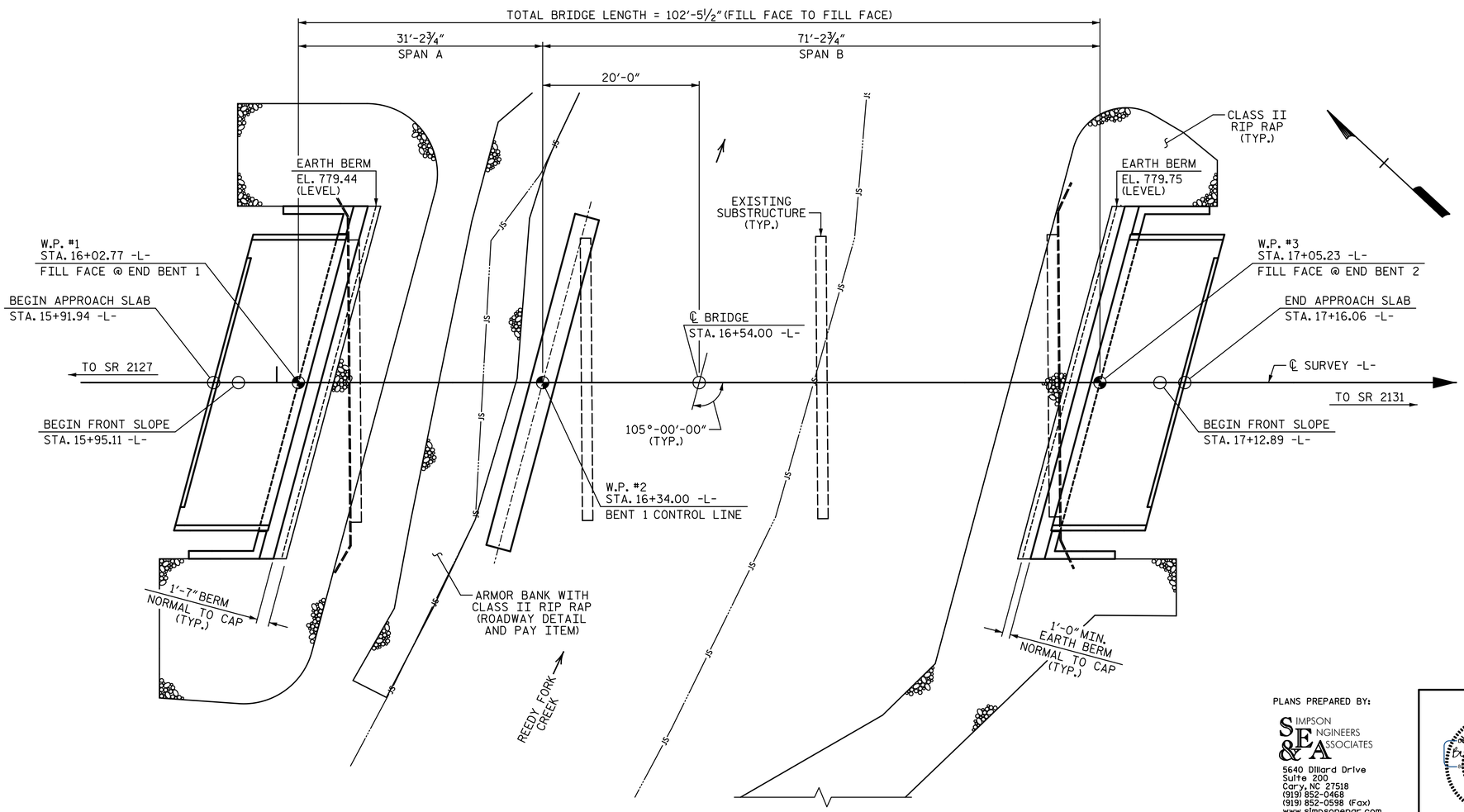

PLAN

(PILES AND DRILLED PIERS NOT SHOWN IN PLAN VIEW)

(+)0.3167% (+)4.3900%

PVI STA. 18+00.00
EL. = 787.81
VC = 200'

GRADE DATA -L-

HYDRAULIC DATA:

DESIGN DISCHARGE	= 4000 CFS
FREQUENCY OF DESIGN FLOOD	= 25 YEAR
DESIGN HIGH WATER ELEVATION	= 785.40
DRAINAGE AREA	= 20.6 SQ. MI.
BASE DISCHARGE (Q 100)	= 6300 CFS
BASE HIGH WATER ELEVATION	= 787.90

OVERTOPPING FLOOD DATA:

OVERTOPPING DISCHARGE	= 5500
FREQUENCY OF OVERTOPPING FLOOD	= 50+ YEAR
OVERTOPPING FLOOD ELEVATION	= 786.80 ✱✱

✱✱ OVERTOPPING OCCURS AT ROADWAY SAG STA. 14+70.00 -L-

I HEREBY CERTIFY THESE PLANS ARE THE AS-BUILT PLANS

PROJECT NO. B-4958
GUILFORD COUNTY
STATION: 16+54.00 -L-

SHEET 1 OF 3 REPLACES BRIDGE #106

TIP: B-4958

DRAWN BY: S.D. COOPER DATE: 4-18
CHECKED BY: B.S. COX DATE: 4-18
DESIGN ENGINEER OF RECORD: B.S. COX DATE: 4-18

PLANS PREPARED BY:
SIMPSON ENGINEERS & ASSOCIATES
5640 Dillard Drive
Suite 200
Cary, NC 27518
(919) 852-0468
(919) 852-0598 (Fax)
www.simpsonengr.com
LICENSURE NO. C-2521

NORTH CAROLINA PROFESSIONAL SEAL 11268 ENGINEER BETSY S. COX
4/10/2018

DOCUMENT NOT CONSIDERED FINAL UNLESS ALL SIGNATURES COMPLETED

STATE OF NORTH CAROLINA
DEPARTMENT OF TRANSPORTATION
RALEIGH

GENERAL DRAWING

FOR BRIDGE ON SR 2128
(BUNCH RD.) OVER
REEDY FORK CREEK
BETWEEN SR 2127 AND SR 2131

36'-6" CLEAR ROADWAY - 105° SKEW

REVISIONS						SHEET NO.
NO.	BY:	DATE:	NO.	BY:	DATE:	S-1
1			3			TOTAL SHEETS
2			4			27

4/10/2018 8:59:47 AM G:\Projects\2016\Division 7 TIP (Mott Macdonald)\B-4958 Guilford 106 (105 24CSU 2BMR)\Structures\Drawings\Final\401_B4958_SMU_GD.dgn

DocuSign Envelope ID: 6DEB83C1-BD30-4262-8F7C-6FB53D85B375

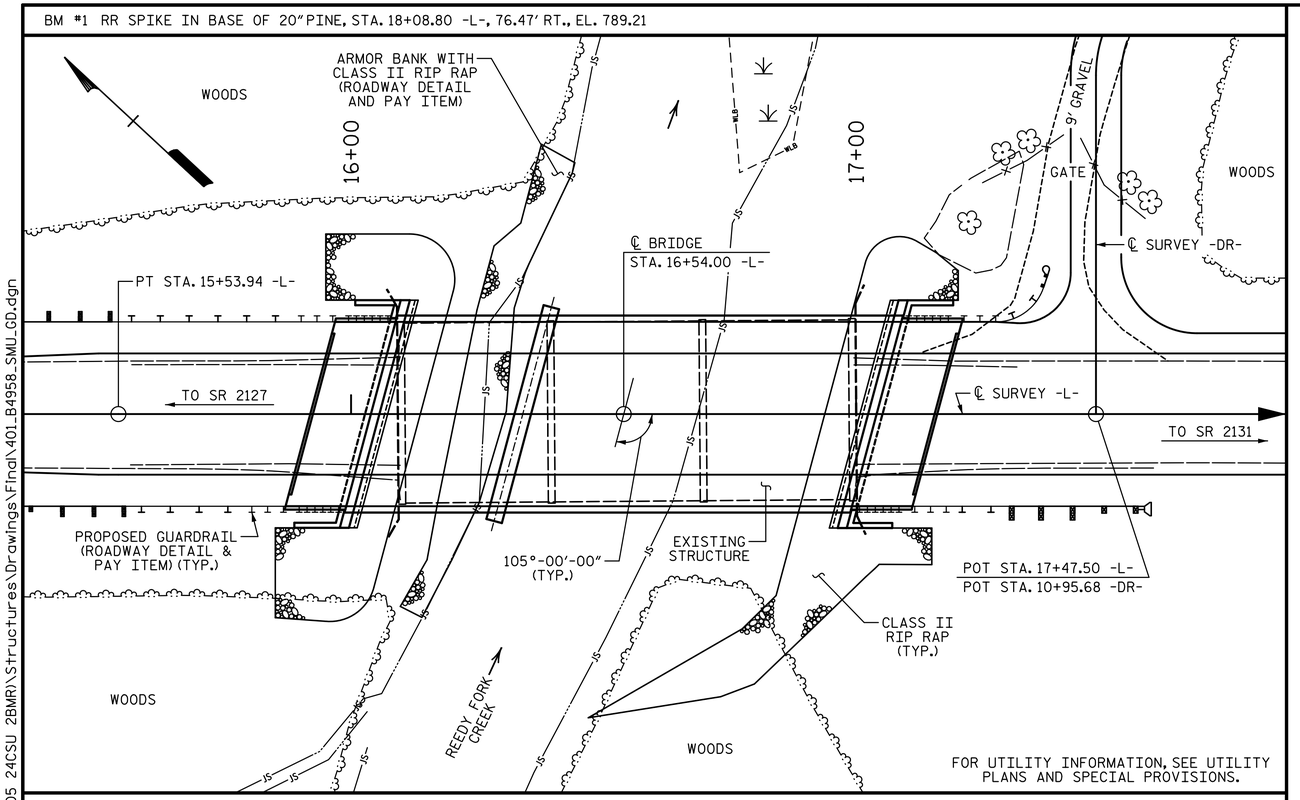

LOCATION SKETCH

NOTES:

ASSUMED LIVE LOAD = HL-93 OR ALTERNATE LOADING.

THIS BRIDGE HAS BEEN DESIGNED IN ACCORDANCE WITH THE AASHTO LRFD BRIDGE DESIGN SPECIFICATIONS.

THIS BRIDGE IS LOCATED IN SEISMIC ZONE 1.

FOR OTHER DESIGN DATA AND GENERAL NOTES, SEE SHEET SN.

FOR EROSION CONTROL MEASURES, SEE EROSION CONTROL PLANS.

REMOVAL OF THE EXISTING BRIDGE SHALL BE PERFORMED SO AS NOT TO ALLOW DEBRIS TO FALL INTO THE WATER. THE CONTRACTOR SHALL REMOVE THE BRIDGE AND SUBMIT PLANS FOR DEMOLITION IN ACCORDANCE WITH ARTICLE 402-2 OF THE STANDARD SPECIFICATIONS.

THE MATERIAL SHOWN IN THE CROSS-HATCHED AREA SHALL BE EXCAVATED FOR A DISTANCE OF 50 FT. LEFT AND 60 FT. RIGHT OF CENTERLINE ROADWAY AS DIRECTED BY THE ENGINEER. THIS WORK WILL BE PAID FOR AT THE CONTRACT LUMP SUM PRICE FOR UNCLASSIFIED STRUCTURE EXCAVATION. SEE SECTION 412 OF THE STANDARD SPECIFICATIONS.

THE EXISTING STRUCTURE CONSISTS OF 3 SPANS, 1 @ 30'-5", 1 @ 30'-1", AND 1 @ 30'-5". THE SUPERSTRUCTURE HAS A CLEAR ROADWAY WIDTH OF 34'-4" WITH ASPHALT WEARING SURFACE ON PRESTRESSED CONCRETE CHANNELS. THE END BENTS AND BENTS CONSIST OF CONCRETE CAPS ON TIMBER PILES WITH SOME PILES CONCRETE ENCASED. THE EXISTING STRUCTURE, WHICH IS LOCATED AT THE SITE OF THE PROPOSED STRUCTURE, SHALL BE REMOVED. THE EXISTING BRIDGE IS PRESENTLY POSTED FOR LOAD LIMIT. SHOULD THE STRUCTURAL INTEGRITY OF THE BRIDGE DETERIORATE DURING CONSTRUCTION OF THE PROPOSED BRIDGE, THE LOAD LIMIT MAY BE REDUCED AS FOUND NECESSARY DURING THE LIFE OF THE PROJECT.

THE SUBSTRUCTURE OF THE EXISTING BRIDGE INDICATED ON THE PLANS IS FROM THE BEST INFORMATION AVAILABLE. SINCE THIS INFORMATION IS SHOWN FOR THE CONVENIENCE OF THE CONTRACTOR, THE CONTRACTOR SHALL HAVE NO CLAIM WHATSOEVER AGAINST THE DEPARTMENT OF TRANSPORTATION FOR ANY DELAYS OR ADDITIONAL COST INCURRED BASED ON DIFFERENCES BETWEEN THE EXISTING BRIDGE SUBSTRUCTURE SHOWN ON THE PLANS AND THE ACTUAL CONDITIONS AT THE PROJECT SITE.

THIS STRUCTURE HAS BEEN DESIGNED IN ACCORDANCE WITH "HEC 18-EVALUATING SCOUR AT BRIDGES."

FOR SUBMITTAL OF WORKING DRAWINGS, SEE SPECIAL PROVISIONS.

FOR FALSEWORK AND FORMWORK, SEE SPECIAL PROVISIONS.

FOR CRANE SAFETY, SEE SPECIAL PROVISIONS.

FOR GROUT FOR STRUCTURES, SEE SPECIAL PROVISIONS.

ASPHALT WEARING SURFACE IS INCLUDED IN ROADWAY QUANTITY ON ROADWAY PLANS.

FOR ASBESTOS ASSESSMENT FOR BRIDGE DEMOLITION AND RENOVATION ACTIVITIES, SEE SPECIAL PROVISIONS.

AT THE CONTRACTOR'S OPTION, PRESTRESSED CONCRETE END BENT CAPS MAY BE SUBSTITUTED IN PLACE OF THE CAST-IN-PLACE CAPS. THE CONTRACTOR SHALL COORDINATE WITH THE ENGINEER TO RECEIVE REVISED PLANS AND DETAILS FROM THE STRUCTURES MANAGEMENT UNIT. THE REDESIGN AND ANY ADDITIONAL MATERIALS NEEDED WILL BE AT NO ADDITIONAL COST TO THE CONTRACTOR.

TOTAL BILL OF MATERIAL

	REMOVAL OF EXISTING STRUCTURE	ASBESTOS ASSESSMENT	PILE EXCAVATION IN SOIL	PILE EXCAVATION NOT IN SOIL	3'-0" DIA. DRILLED PIER IN SOIL	3'-0" DIA. DRILLED PIER NOT IN SOIL	PERMANENT STEEL CASING FOR 3'-0" DIA. DRILLED PIERS	SID INSPECT.	CSL TESTING	UNCLASS. STRUCT. EXCAV.	CLASS A CONCRETE	BRIDGE APPROACH SLABS	REINF. STEEL	SPIRAL COLUMN REINF. STEEL	PILE DRIVING EQUIP. SETUP FOR HP 12 X 53 STEEL PILES	HP 12 X 53 STEEL PILES		STEEL PILE POINTS	TWO BAR METAL RAIL	1'-2" X 2'-9 3/4" CONCRETE PARAPET	RIP RAP CLASS II (2'-0" THICK)	GEOTEXTILE FOR DRAINAGE	ELASTOMERIC BEARINGS	3'-0" X 2'-0" PRESTRESSED CONCRETE CORED SLABS	
	LS	LS	LF	LF	LF	LF	LF	EA	EA	LS	CY	LS	LB	LB	EA	NO.	LF	EA	LF	LF	TON	SY	LS	NO.	LF
SUPERSTR.												LS							184.64	200.26			LS	26	1300.00
END BENT 1										LS	24.9		3,009		7	7	210				125	140			
BENT 1					82.3	37	46.6	1	1		17.6		11,556	2554											
END BENT 2			37	33						LS	24.9		3,009		7	7	70	7			120	135			
TOTAL	LS	LS	37	33	82.3	37	46.6	1	1	LS	67.4	LS	17,574	2554	14	14	280	7	184.64	200.26	245	275	LS	26	1300.00

FOUNDATION NOTES:

FOR DRILLED PIERS, SEE SECTION 411 OF THE STANDARD SPECIFICATIONS.

DRILLED PIERS AT BENT 1 ARE DESIGNED FOR A FACTORED RESISTANCE OF 395 TONS PER PIER. CHECK FIELD CONDITIONS FOR THE REQUIRED TIP RESISTANCE OF 40 TSF.

PERMANENT STEEL CASINGS ARE REQUIRED FOR DRILLED PIERS AT BENT 1. DO NOT EXTEND PERMANENT STEEL CASINGS BELOW ELEVATION 762 FT. WITHOUT PRIOR APPROVAL FROM THE ENGINEER.

INSTALL DRILLED PIERS TO A TIP ELEVATION NO HIGHER THAN 738 FT. WITH THE REQUIRED TIP RESISTANCE AND PENETRATION OF AT LEAST 7 FT. INTO ROCK AS DEFINED BY ARTICLE 411-1 OF THE STANDARD SPECIFICATIONS.

THE SCOUR CRITICAL ELEVATION FOR BENT 1 IS ELEVAITON 759 FT. SCOUR CRITICAL ELEVATIONS ARE USED TO MONITOR POSSIBLE SCOUR PROBLEMS DURING THE LIFE OF THE STRUCTURE.

SID INSPECTIONS MAY BE REQUIRED FOR DRILLED PIERS. THE ENGINEER WILL DETERMINE THE NEED FOR SID INSPECTIONS. FOR SID INSPECTIONS, SEE SECTION 411 OF THE STANDARD SPECIFICATIONS.

CSL TUBES ARE REQUIRED AND CSL TESTING MAY BE REQUIRED FOR DRILLED PIERS. THE ENGINEER WILL DETERMINE THE NEED FOR CSL TESTING. FOR CSL TESTING, SEE SECTION 411 OF THE STANDARD SPECIFICATIONS.

FOR PILES, SEE SECTION 450 OF THE STANDARD SPECIFICATIONS.

PILES AT END BENT 1 ARE DESIGNED FOR A FACTORED RESISTANCE OF 60 TONS PER PILE.

DRIVE PILES AT END BENT 1 TO A REQUIRED DRIVING RESISTANCE OF 100 TONS PER PILE.

PILES AT END BENT 2 ARE DESIGNED FOR A FACTORED RESISTANCE OF 90 TONS PER PILE.

DRIVE PILES AT END BENT 2 TO A REQUIRED DRIVING RESISTANCE OF 150 TONS PER PILE.

DRILLED-IN PILES MAY BE REQUIRED FOR END BENT 2. EXCAVATE HOLES AT PILE LOCATIONS TO AN ELEVATION 10 FEET BELOW BOTTOM OF CAP OR 5 FEET INTO ROCK, WHICHEVER OCCURS FIRST. FOR PILE EXCATION, SEE SECTION 450 OF THE STANDARD SPECIFICAITONS.

CONCRETE OR GROUNT IS REQUIRED TO FILL HOLES FOR PILE EXCAVATION AT END BENT 2.

DO NOT DRIVE PILES IF HARD CRYSTALLINE ROCK IS PRESENT AT THE BOTTOM OF PILE EXCAVATION AT END BENT 2.

DRAWN BY: S.D. COOPER DATE: 4-18
CHECKED BY: B.S. COX DATE: 4-18
DESIGN ENGINEER OF RECORD: B.S. COX DATE: 4-18

PROJECT NO. B-4958
GUILFORD COUNTY
STATION: 16+54.00 -L-

SHEET 2 OF 3

PLANS PREPARED BY:
SIMPSON ENGINEERS & ASSOCIATES
5640 Dillard Drive
Suite 200
Cary, NC 27518
(919) 852-0468
(919) 852-0598 (Fax)
www.simpsonengr.com
LICENSURE NO. C-2521

NORTH CAROLINA PROFESSIONAL SEAL 11268 ENGINEER BETSY S. COX
4/10/2018

DOCUMENT NOT CONSIDERED FINAL UNLESS ALL SIGNATURES COMPLETED

STATE OF NORTH CAROLINA
DEPARTMENT OF TRANSPORTATION
RALEIGH

GENERAL DRAWING
FOR BRIDGE ON SR 2128 (BUNCH RD.) OVER REEDY FORK CREEK BETWEEN SR 2127 AND SR 2131
36'-6" CLEAR ROADWAY - 105° SKEW

REVISIONS						SHEET NO.
NO.	BY:	DATE:	NO.	BY:	DATE:	S-2
1			3			TOTAL SHEETS
2			4			27

4/10/2018 9:05:45 AM G:\Projects\2016\Division 7 TIP (Mott Macdonald)\B-4958 Guilford 106 (105 24CSU 2BMR)\Structures\Drawings\Final\401_B4958_SMU_GD.dgn

DocuSign Envelope ID: 6DEB83C1-BD30-4262-8F7C-6FB53D85B375

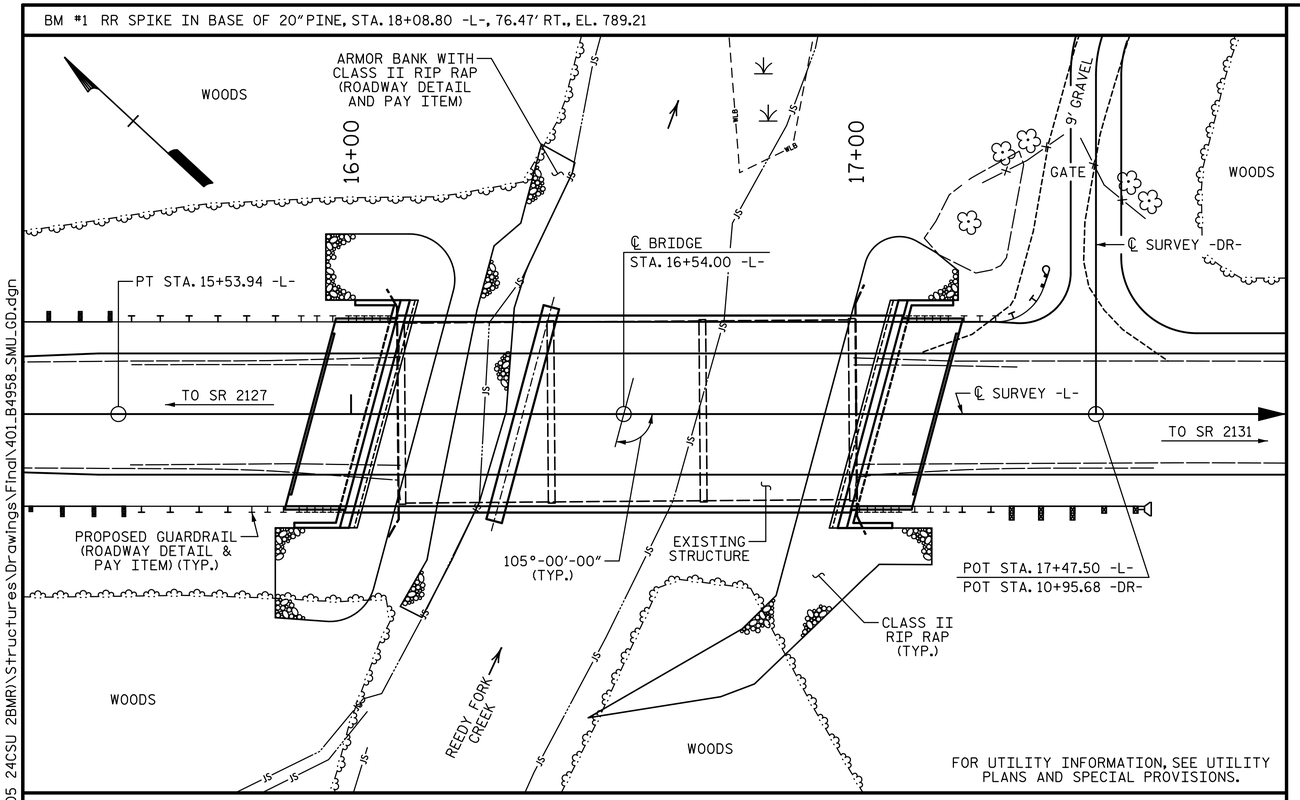

LOCATION SKETCH

NOTES (MICROPILE OPTION):

ASSUMED LIVE LOAD = HL-93 OR ALTERNATE LOADING.

THIS BRIDGE HAS BEEN DESIGNED IN ACCORDANCE WITH THE AASHTO LRFD BRIDGE DESIGN SPECIFICATIONS.

THIS BRIDGE IS LOCATED IN SEISMIC ZONE 1.

FOR OTHER DESIGN DATA AND GENERAL NOTES, SEE SHEET SN.

FOR EROSION CONTROL MEASURES, SEE EROSION CONTROL PLANS.

REMOVAL OF THE EXISTING BRIDGE SHALL BE PERFORMED SO AS NOT TO ALLOW DEBRIS TO FALL INTO THE WATER. THE CONTRACTOR SHALL REMOVE THE BRIDGE AND SUBMIT PLANS FOR DEMOLITION IN ACCORDANCE WITH ARTICLE 402-2 OF THE STANDARD SPECIFICATIONS.

THE MATERIAL SHOWN IN THE CROSS-HATCHED AREA SHALL BE EXCAVATED FOR A DISTANCE OF 50 FT. LEFT AND 60 FT. RIGHT OF CENTERLINE ROADWAY AS DIRECTED BY THE ENGINEER. THIS WORK WILL BE PAID FOR AT THE CONTRACT LUMP SUM PRICE FOR UNCLASSIFIED STRUCTURE EXCAVATION. SEE SECTION 412 OF THE STANDARD SPECIFICATIONS.

THE EXISTING STRUCTURE CONSISTS OF 3 SPANS, 1 @ 30'-5", 1 @ 30'-1", AND 1 @ 30'-5". THE SUPERSTRUCTURE HAS A CLEAR ROADWAY WIDTH OF 34'-4" WITH ASPHALT WEARING SURFACE ON PRESTRESSED CONCRETE CHANNELS. THE END BENTS AND BENTS CONSIST OF CONCRETE CAPS ON TIMBER PILES WITH SOME PILES CONCRETE ENCASED. THE EXISTING STRUCTURE, WHICH IS LOCATED AT THE SITE OF THE PROPOSED STRUCTURE, SHALL BE REMOVED. THE EXISTING BRIDGE IS PRESENTLY POSTED FOR LOAD LIMIT. SHOULD THE STRUCTURAL INTEGRITY OF THE BRIDGE DETERIORATE DURING CONSTRUCTION OF THE PROPOSED BRIDGE, THE LOAD LIMIT MAY BE REDUCED AS FOUND NECESSARY DURING THE LIFE OF THE PROJECT.

THE SUBSTRUCTURE OF THE EXISTING BRIDGE INDICATED ON THE PLANS IS FROM THE BEST INFORMATION AVAILABLE. SINCE THIS INFORMATION IS SHOWN FOR THE CONVENIENCE OF THE CONTRACTOR, THE CONTRACTOR SHALL HAVE NO CLAIM WHATSOEVER AGAINST THE DEPARTMENT OF TRANSPORTATION FOR ANY DELAYS OR ADDITIONAL COST INCURRED BASED ON DIFFERENCES BETWEEN THE EXISTING BRIDGE SUBSTRUCTURE SHOWN ON THE PLANS AND THE ACTUAL CONDITIONS AT THE PROJECT SITE.

THIS STRUCTURE HAS BEEN DESIGNED IN ACCORDANCE WITH "HEC 18-EVALUATING SCOUR AT BRIDGES."

FOR SUBMITTAL OF WORKING DRAWINGS, SEE SPECIAL PROVISIONS.

FOR FALSEWORK AND FORMWORK, SEE SPECIAL PROVISIONS.

FOR CRANE SAFETY, SEE SPECIAL PROVISIONS.

FOR GROUT FOR STRUCTURES, SEE SPECIAL PROVISIONS.

ASPHALT WEARING SURFACE IS INCLUDED IN ROADWAY QUANTITY ON ROADWAY PLANS.

FOR ASBESTOS ASSESSMENT FOR BRIDGE DEMOLITION AND RENOVATION ACTIVITIES, SEE SPECIAL PROVISIONS.

IF THE MICROPILE OPTION IS SELECTED, BOTH END BENT 1 AND END BENT 2 MUST BE CONSTRUCTED WITH MICROPILES.

TOTAL BILL OF MATERIAL (MICROPILE OPTION)

	REMOVAL OF EXISTING STRUCTURE	ASBESTOS ASSESSMENT	3'-0" DIA. DRILLED PIER IN SOIL	3'-0" DIA. DRILLED PIER NOT IN SOIL	PERMANENT STEEL CASING FOR 3'-0" DIA. DRILLED PIERS	SID INSPECT.	CSL TESTING	UNCLASS. STRUCT. EXCAV.	CLASS A CONCRETE	BRIDGE APPROACH SLABS	REINF. STEEL	SPIRAL COLUMN REINF. STEEL	TWO BAR METAL RAIL	1'-2" X 2'-9¾" CONCRETE PARAPET	RIP RAP CLASS II (2'-0" THICK)	GEOTEXTILE FOR DRAINAGE	ELASTOMERIC BEARINGS	3'-0" X 2'-0" PRESTRESSED CONCRETE CORED SLABS		6⅝" Ø MICROPILES	MICROPILE PROOF TESTS
	LS	LS	LF	LF	LF	EA	EA	LS	CY	LS	LB	LB	LF	LF	TON	SY	LS	NO.	LF	EA	EA
SUPERSTR.										LS			184.64	200.26			LS	26	1300.00		
END BENT 1								LS	23.7		3,062				125	140				7	1
BENT 1			82.3	37	46.6	1	1		17.6		11,556	2554									
END BENT 2								LS	23.7		3,062				120	135				7	1
TOTAL	LS	LS	82.3	37	46.6	1	1	LS	65.0	LS	17,680	2554	184.64	200.26	245	275	LS	26	1300.00	14	2

FOUNDATION NOTES FOR MICROPILE OPTION:

FOR DRILLED PIERS, SEE SECTION 411 OF THE STANDARD SPECIFICATIONS.

DRILLED PIERS AT BENT 1 ARE DESIGNED FOR A FACTORED RESISTANCE OF 395 TONS PER PIER. CHECK FIELD CONDITIONS FOR THE REQUIRED TIP RESISTANCE OF 40 TSF.

PERMANENT STEEL CASINGS ARE REQUIRED FOR DRILLED PIERS AT BENT 1. DO NOT EXTEND PERMANENT STEEL CASINGS BELOW ELEVATION 762 FT. WITHOUT PRIOR APPROVAL FROM THE ENGINEER.

INSTALL DRILLED PIERS TO A TIP ELEVATION NO HIGHER THAN 738 FT. WITH THE REQUIRED TIP RESISTANCE AND PENETRATION OF AT LEAST 7 FT. INTO ROCK AS DEFINED BY ARTICLE 411-1 OF THE STANDARD SPECIFICATIONS.

THE SCOUR CRITICAL ELEVATION FOR BENT 1 IS ELEVAITON 759 FT. SCOUR CRITICAL ELEVATIONS ARE USED TO MONITOR POSSIBLE SCOUR PROBLEMS DURING THE LIFE OF THE STRUCTURE.

SID INSPECTIONS MAY BE REQUIRED FOR DRILLED PIERS. THE ENGINEER WILL DETERMINE THE NEED FOR SID INSPECTIONS. FOR SID INSPECTIONS, SEE SECTION 411 OF THE STANDARD SPECIFICATIONS.

CSL TUBES ARE REQUIRED AND CSL TESTING MAY BE REQUIRED FOR DRILLED PIERS. THE ENGINEER WILL DETERMINE THE NEED FOR CSL TESTING. FOR CSL TESTING, SEE SECTION 411 OF THE STANDARD SPECIFICATIONS.

FOR MICROPILES, SEE MICROPILES PROVISION.

DESIGN BOND LENGTH FOR MICROPILES AT END BENT 1 FOR A FACTORED RESISTANCE OF 60 TONS PER PILE.

DESIGN BOND LENGTH FOR MICROPILES AT END BENT 2 FOR A FACTORED RESISTANCE OF 90 TONS PER PILE.

INSTALL REINFORCING CASINGS FOR MICROPILES AT END BENT 1 AND 2 WITH A PENETRATION OF AT LEAST 5 FEET INTO ROCK.

USE REINFORCING CASINGS WITH YIELD STRENGTHS OF AT LEAST 80 KSI FOR MICROPILES AT END BENT 1 AND 2.

PROOF LOAD TESTS ARE REQUIRED FOR MICROPILE AT END BENT 1 AND 2. LOAD TEST PILES TO 0.8 TIMES THE NOMINAL RESISTANCE OF THE BOND LENGTH PLUS ANY ADDITOINAL RESISTANCE TO ACCOUNT FOR MATERIAL ABOVE THE BOND LENGTH.

PROJECT NO. B-4958
GUILFORD COUNTY
STATION: 16+54.00 -L-

SHEET 3 OF 3

DRAWN BY: S.D. COOPER DATE: 4-18
CHECKED BY: B.S. COX DATE: 4-18
DESIGN ENGINEER OF RECORD: B.S. COX DATE: 4-18

PLANS PREPARED BY:
SIMPSON ENGINEERS & ASSOCIATES
5640 Dillard Drive
Suite 200
Cary, NC 27518
(919) 852-0468
(919) 852-0598 (Fax)
www.simpsonengr.com
LICENSURE NO. C-2521

NORTH CAROLINA PROFESSIONAL SEAL 11268 ENGINEER BETSY S. COX
4/10/2018

DOCUMENT NOT CONSIDERED FINAL UNLESS ALL SIGNATURES COMPLETED

STATE OF NORTH CAROLINA
DEPARTMENT OF TRANSPORTATION
RALEIGH

MICROPILE OPTION
GENERAL DRAWING
FOR BRIDGE ON SR 2128
(BUNCH RD.) OVER
REEDY FORK CREEK
BETWEEN SR 2127 AND SR 2131
36'-6" CLEAR ROADWAY - 105° SKEW

REVISIONS						SHEET NO.
NO.	BY:	DATE:	NO.	BY:	DATE:	S-3
1			3			TOTAL SHEETS
2			4			27

4/10/2018 8:59:51 AM G:\Projects\2016\Division 7 TIP (Mott Macdonald)\B-4958 Guilford 106 (105 24CSU 2BMR)\Structures\Drawings\Final\401_B4958_SMU_GD.dgn

DocuSign Envelope ID: 6DEB83C1-BD30-4262-8F7C-6FB53D85B375

4/10/2018 8:59:51 AM G:\Projects\2016\Division 7 TIP (Mott Macdonald)\B-4958 Guilford 106 (105 24CSU 2BMR)\Structures\Drawings\Final\401_B4958_SMU_LRFR.dgn

LOAD AND RESISTANCE FACTOR RATING (LRFD) SUMMARY FOR PRESTRESSED CONCRETE GIRDERS

LEVEL		VEHICLE	WEIGHT (W) (TONS)	CONTROLLING LOAD RATING	MINIMUM RATING FACTORS (RF)	TONS = W X RF	STRENGTH I LIMIT STATE											SERVICE III LIMIT STATE						COMMENT NUMBER
							LIVELOAD FACTORS	MOMENT					SHEAR					LIVELOAD FACTORS	MOMENT					
								DISTRIBUTION FACTORS (DF)	RATING FACTOR	SPAN	GIRDER LOCATION	DISTANCE FROM LEFT END OF SPAN (ft)	DISTRIBUTION FACTORS (DF)	RATING FACTOR	SPAN	GIRDER LOCATION	DISTANCE FROM LEFT END OF SPAN (ft)		DISTRIBUTION FACTORS (DF)	RATING FACTOR	SPAN	GIRDER LOCATION	DISTANCE FROM LEFT END OF SPAN (ft)	
DESIGN LOAD RATING		HL-93(Inv)	N/A	**1**	2.46	- -	1.75	0.286	**2.46**	30'	EL	**14.5**	0.517	3.66	30'	EL	5.8	0.80	0.286	3.02	30'	EL	14.5	
		HL-93(Opr)	N/A	--	3.18	- -	1.35	0.286	3.18	30'	EL	14.5	0.517	4.80	30'	EL	5.8	N/A	- -	- -	30'	- -	- -	
		HS-20(Inv)	36.000	**2**	3.33	119.9	1.75	0.286	**3.33**	30'	EL	**11.6**	0.517	4.22	30'	EL	5.8	0.80	0.286	4.20	30'	EL	11.6	
		HS-20(Opr)	36.000	--	4.32	155.5	1.35	0.286	4.32	30'	EL	11.6	0.517	5.53	30'	EL	5.8	N/A	- -	- -	30'	- -	- -	
LEGAL LOAD RATING	SV	SNSH	13.500	--	5.45	73.6	1.40	0.286	6.93	30'	EL	14.5	0.517	10.10	30'	EL	5.8	0.80	0.286	5.45	30'	EL	14.5	
		SNGARBS2	20.000	--	4.81	96.2	1.40	0.286	5.96	30'	EL	11.6	0.517	8.02	30'	EL	5.8	0.80	0.286	4.81	30'	EL	11.6	
		SNAGRIS2	22.000	--	4.88	107.4	1.40	0.286	6.05	30'	EL	11.6	0.517	7.84	30'	EL	5.8	0.80	0.286	4.88	30'	EL	11.6	
		SNCOTTS3	27.250	--	2.73	74.4	1.40	0.286	3.48	30'	EL	14.5	0.517	5.03	30'	EL	5.8	0.80	0.286	2.73	30'	EL	14.5	
		SNAGGRS4	34.925	--	2.63	91.9	1.40	0.286	3.32	30'	EL	11.6	0.517	4.80	30'	EL	5.8	0.80	0.286	2.63	30'	EL	14.5	
		SNS5A	35.550	--	2.55	90.7	1.40	0.286	3.24	30'	EL	14.5	0.517	5.04	30'	EL	5.8	0.80	0.286	2.55	30'	EL	14.5	
		SNS6A	39.950	--	2.41	96.3	1.40	0.286	3.07	30'	EL	14.5	0.517	4.81	30'	EL	5.8	0.80	0.286	2.41	30'	EL	14.5	
		SNS7B	42.000	**3**	2.34	98.3	1.40	0.286	2.98	30'	EL	14.5	0.517	4.85	30'	EL	5.8	0.80	0.286	**2.34**	30'	EL	**14.5**	
	TTST	TNAGRIT3	33.000	--	3.12	103.0	1.40	0.286	3.97	30'	EL	14.5	0.517	5.79	30'	EL	5.8	0.80	0.286	3.12	30'	EL	14.5	
		TNT4A	33.075	--	2.96	97.9	1.40	0.286	3.77	30'	EL	14.5	0.517	5.38	30'	EL	5.8	0.80	0.286	2.96	30'	EL	14.5	
		TNT6A	41.600	--	2.69	111.9	1.40	0.286	3.42	30'	EL	14.5	0.517	5.06	30'	EL	5.8	0.80	0.286	2.69	30'	EL	14.5	
		TNT7A	42.000	--	2.78	116.8	1.40	0.286	3.54	30'	EL	14.5	0.517	5.01	30'	EL	5.8	0.80	0.286	2.78	30'	EL	14.5	
		TNT7B	42.000	--	2.62	110.0	1.40	0.286	3.33	30'	EL	14.5	0.517	4.84	30'	EL	5.8	0.80	0.286	2.62	30'	EL	14.5	
		TNAGRIT4	43.000	--	2.71	116.5	1.40	0.286	3.45	30'	EL	14.5	0.517	4.82	30'	EL	5.8	0.80	0.286	2.71	30'	EL	14.5	
		TNAGT5A	45.000	--	2.63	118.4	1.40	0.286	3.35	30'	EL	14.5	0.517	4.94	30'	EL	5.8	0.80	0.286	2.63	30'	EL	14.5	
		TNAGT5B	45.000	--	2.55	114.8	1.40	0.286	3.16	30'	EL	11.6	0.517	4.44	30'	EL	5.8	0.80	0.286	2.55	30'	EL	11.6	

LOAD FACTORS:

DESIGN LOAD RATING FACTORS	LIMIT STATE	γ_{DC}	γ_{DW}
	STRENGTH I	1.25	1.50
	SERVICE III	1.00	1.00

NOTES:

MINIMUM RATING FACTORS ARE BASED ON THE STRENGTH I AND SERVICE III LIMIT STATES.

ALLOWABLE STRESSES FOR SERVICE III LIMIT STATE ARE AS REQUIRED FOR DESIGN.

DISTANCE FROM LEFT END OF SPAN IS MEASURED FROM ℄ BEARING.

(#) CONTROLLING LOAD RATING

(1) DESIGN LOAD RATING (HL-93)

(2) DESIGN LOAD RATING (HS-20)

(3) LEGAL LOAD RATING **

** SEE CHART FOR VEHICLE TYPE

GIRDER LOCATION

I - INTERIOR GIRDER
EL - EXTERIOR LEFT GIRDER
ER - EXTERIOR RIGHT GIRDER

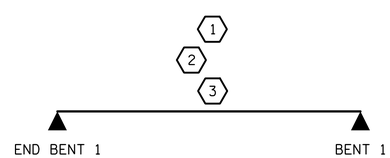

LRFR SUMMARY

SPAN A

PROJECT NO. B-4958

GUILFORD COUNTY

STATION: 16+54.00 -L-

SHEET 1 OF 2

STATE OF NORTH CAROLINA
DEPARTMENT OF TRANSPORTATION
RALEIGH

LRFR SUMMARY FOR 30'-0" CORED SLAB UNIT 105° SKEW

(NON-INTERSTATE TRAFFIC)

REVISIONS								SHEET NO.
NO.	BY:	DATE:	NO.	BY:	DATE:			S-4
1			3					TOTAL SHEETS
2			4					27

PLANS PREPARED BY:

SIMPSON ENGINEERS & ASSOCIATES
5640 Dillard Drive
Suite 200
Cary, NC 27518
(919) 852-0468
(919) 852-0598 (Fax)
www.simpsonengr.com
LICENSURE NO. C-2521

NORTH CAROLINA PROFESSIONAL SEAL 11268 ENGINEER BETSY S. COX

4/10/2018

DOCUMENT NOT CONSIDERED FINAL UNLESS ALL SIGNATURES COMPLETED

DRAWN BY:	S.D. COOPER	DATE:	4-18
CHECKED BY:	B.S. COX	DATE:	4-18
DESIGN ENGINEER OF RECORD:	B.S. COX	DATE:	4-18

DocuSign Envelope ID: 6DEB83C1-BD30-4262-8F7C-6FB53D85B375

4/10/2018 8:59:51 AM G:\Projects\2016\Division 7 TIP (Mott Macdonald)\B-4958 Guilford 106 (105 24CSU 2BMR)\Structures\Drawings\Final\401_B4958_SMU_LRFR.dgn

LOAD AND RESISTANCE FACTOR RATING (LRFD) SUMMARY FOR PRESTRESSED CONCRETE GIRDERS

LEVEL		VEHICLE	WEIGHT (W) (TONS)	CONTROLLING LOAD RATING	MINIMUM RATING FACTORS (RF)	TONS = W X RF	STRENGTH I LIMIT STATE											SERVICE III LIMIT STATE						COMMENT NUMBER
								MOMENT					SHEAR						MOMENT					
							LIVELOAD FACTORS	DISTRIBUTION FACTORS (DF)	RATING FACTOR	SPAN	GIRDER LOCATION	DISTANCE FROM LEFT END OF SPAN (ft)	DISTRIBUTION FACTORS (DF)	RATING FACTOR	SPAN	GIRDER LOCATION	DISTANCE FROM LEFT END OF SPAN (ft)	LIVELOAD FACTORS	DISTRIBUTION FACTORS (DF)	RATING FACTOR	SPAN	GIRDER LOCATION	DISTANCE FROM LEFT END OF SPAN (ft)	
DESIGN LOAD RATING		HL-93(Inv)	N/A	**1**	1.014	--	1.75	0.269	1.04	70'	EL	34.482	0.608	1.1	70'	EL	3.448	0.80	0.269	**1.01**	70'	EL	**34.482**	
		HL-93(Opr)	N/A	--	1.355	--	1.35	0.269	1.35	70'	EL	34.482	0.608	1.43	70'	EL	3.448	N/A	--	--	--	--	--	
		HS-20(Inv)	36.000	**2**	1.315	47.356	1.75	0.269	1.36	70'	EL	34.482	0.608	1.38	70'	EL	3.448	0.80	0.269	**1.32**	70'	EL	**34.482**	
		HS-20(Opr)	36.000	--	1.757	63.236	1.35	0.269	1.76	70'	EL	34.482	0.608	1.79	70'	EL	3.448	N/A	--	--	--	--	--	
LEGAL LOAD RATING	SV	SNSH	13.500	--	2.938	39.656	1.4	0.269	3.78	70'	EL	34.482	0.608	4.12	70'	EL	3.448	0.80	0.269	2.94	70'	EL	34.482	
		SNGARBS2	20.000	--	2.203	44.052	1.4	0.269	2.84	70'	EL	34.482	0.608	2.93	70'	EL	3.448	0.80	0.269	2.20	70'	EL	34.482	
		SNAGRIS2	22.000	--	2.092	46.016	1.4	0.269	2.69	70'	EL	34.482	0.608	2.72	70'	EL	3.448	0.80	0.269	2.09	70'	EL	34.482	
		SNCOTTS3	27.250	--	1.462	39.844	1.4	0.269	1.88	70'	EL	34.482	0.608	2.06	70'	EL	3.448	0.80	0.269	1.46	70'	EL	34.482	
		SNAGGRS4	34.925	--	1.227	42.856	1.4	0.269	1.58	70'	EL	34.482	0.608	1.71	70'	EL	3.448	0.80	0.269	1.23	70'	EL	34.482	
		SNS5A	35.550	--	1.2	42.646	1.4	0.269	1.54	70'	EL	34.482	0.608	1.73	70'	EL	3.448	0.80	0.269	1.20	70'	EL	34.482	
		SNS6A	39.950	--	1.103	44.058	1.4	0.269	1.42	70'	EL	34.482	0.608	1.58	70'	EL	3.448	0.80	0.269	1.10	70'	EL	34.482	
		SNS7B	42.000	--	1.05	44.113	1.4	0.269	1.35	70'	EL	34.482	0.608	1.55	70'	EL	3.448	0.80	0.269	1.05	70'	EL	34.482	
	TTST	TNAGRIT3	33.000	--	1.345	44.401	1.4	0.269	1.73	70'	EL	34.482	0.608	1.88	70'	EL	3.448	0.80	0.269	1.35	70'	EL	34.482	
		TNT4A	33.075	--	1.352	44.717	1.4	0.269	1.74	70'	EL	34.482	0.608	1.83	70'	EL	3.448	0.80	0.269	1.35	70'	EL	34.482	
		TNT6A	41.600	--	1.108	46.073	1.4	0.269	1.43	70'	EL	34.482	0.608	1.65	70'	EL	3.448	0.80	0.269	1.11	70'	EL	34.482	
		TNT7A	42.000	--	1.114	46.794	1.4	0.269	1.43	70'	EL	34.482	0.608	1.62	70'	EL	3.448	0.80	0.269	1.11	70'	EL	34.482	
		TNT7B	42.000	--	1.155	48.526	1.4	0.269	1.49	70'	EL	34.482	0.608	1.51	70'	EL	3.448	0.80	0.269	1.16	70'	EL	34.482	
		TNAGRIT4	43.000	--	1.097	47.174	1.4	0.269	1.41	70'	EL	34.482	0.608	1.46	70'	EL	3.448	0.80	0.269	1.10	70'	EL	34.482	
		TNAGT5A	45.000	--	1.033	46.505	1.4	0.269	1.33	70'	EL	34.482	0.608	1.45	70'	EL	3.448	0.80	0.269	1.03	70'	EL	34.482	
		TNAGT5B	45.000	**3**	1.02	45.905	1.4	0.269	1.31	70'	EL	34.482	0.608	1.39	70'	EL	3.448	0.80	0.269	**1.02**	70'	EL	**34.482**	

LOAD FACTORS:

DESIGN LOAD RATING FACTORS	LIMIT STATE	γ_{DC}	γ_{DW}
	STRENGTH I	1.25	1.50
	SERVICE III	1.00	1.00

NOTES:

MINIMUM RATING FACTORS ARE BASED ON THE STRENGTH I AND SERVICE III LIMIT STATES.

ALLOWABLE STRESSES FOR SERVICE III LIMIT STATE ARE AS REQUIRED FOR DESIGN.

DISTANCE FROM LEFT END OF SPAN IS MEASURED FROM ℄ BEARING.

(#) CONTROLLING LOAD RATING

(1) DESIGN LOAD RATING (HL-93)

(2) DESIGN LOAD RATING (HS-20)

(3) LEGAL LOAD RATING **

** SEE CHART FOR VEHICLE TYPE

GIRDER LOCATION

I - INTERIOR GIRDER
EL - EXTERIOR LEFT GIRDER
ER - EXTERIOR RIGHT GIRDER

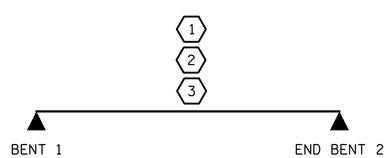

LRFR SUMMARY

SPAN B

PROJECT NO. B-4958

GUILFORD COUNTY

STATION: 16+54.00 -L-

SHEET 2 OF 2

STATE OF NORTH CAROLINA
DEPARTMENT OF TRANSPORTATION
RALEIGH

LRFR SUMMARY FOR 70'-0" CORED SLAB UNIT 105° SKEW

(NON-INTERSTATE TRAFFIC)

REVISIONS								SHEET NO.
NO.	BY:	DATE:	NO.	BY:	DATE:			S-5
1			3					TOTAL SHEETS
2			4					27

PLANS PREPARED BY:

SIMPSON ENGINEERS & ASSOCIATES
5640 Dillard Drive
Suite 200
Cary, NC 27518
(919) 852-0468
(919) 852-0598 (Fax)
www.simpsonengr.com
LICENSURE NO. C-2521

NORTH CAROLINA PROFESSIONAL SEAL 11268 ENGINEER BETSY S. COX

4/10/2018

DOCUMENT NOT CONSIDERED FINAL UNLESS ALL SIGNATURES COMPLETED

DRAWN BY:	S.D. COOPER	DATE:	4-18
CHECKED BY:	B.S. COX	DATE:	4-18
DESIGN ENGINEER OF RECORD:	B.S. COX	DATE:	4-18

DocuSign Envelope ID: 6DEB83C1-BD30-4262-8F7C-6FB53D85B375

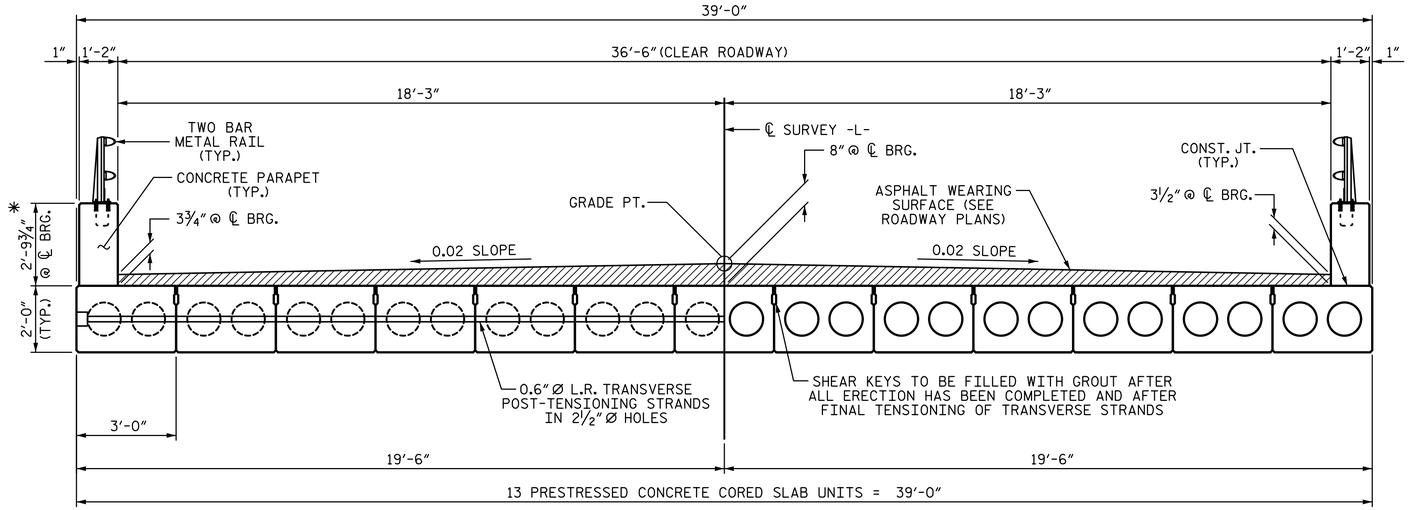

HALF SECTION
AT INTERMEDIATE DIAPHRAGMS

HALF SECTION
THROUGH VOIDS

TYPICAL SECTION

✳ - THE MAXIMUM CONCRETE PARAPET HEIGHTS AND ASPHALT THICKNESS ARE SHOWN. THE HEIGHT OF THE CONCRETE PARAPET AND ASPHALT THICKNESS VARIES WHILE THE TOP OF THE CONCRETE PARAPET FOLLOWS THE PROFILE OF THE GUTTERLINE, SEE THE CONCRETE PARAPET DETAILS SHEET.

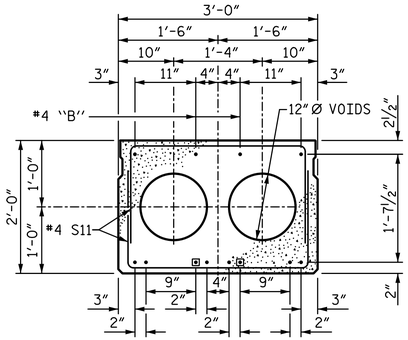

INTERIOR SLAB SECTION SPAN A (30'-0" UNIT)

(10 STRANDS REQUIRED)

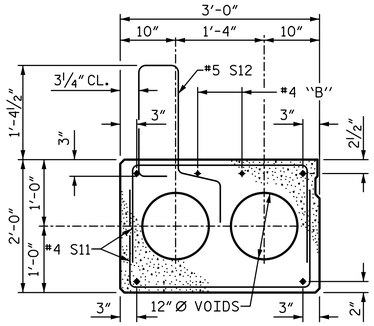

EXT. SLAB SECTION

(FOR PRESTRESSED STRAND LAYOUT, SEE INTERIOR SLAB SECTION.)

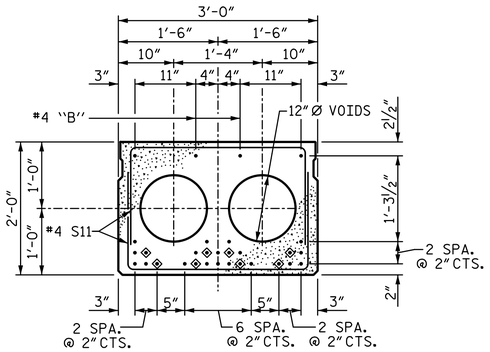

INTERIOR SLAB SECTION SPAN B (70'-0" UNIT)

(28 STRANDS REQUIRED)

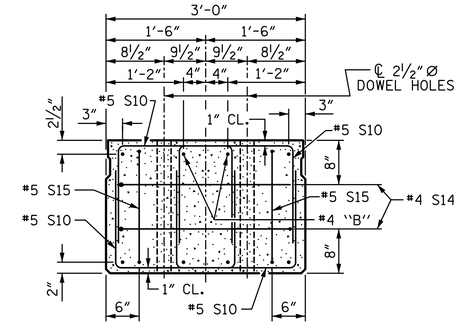

END ELEVATION

SHOWING PLACEMENT OF DOUBLE STIRRUPS AND LOCATION OF DOWEL HOLES. (STRAND LAYOUT NOT SHOWN.) INTERIOR SLAB UNIT SHOWN-EXTERIOR SLAB UNIT SIMILAR EXCEPT SHEAR KEY LOCATION.

0.6" Ø LOW RELAXATION STRAND LAYOUT

⊡ BOND SHALL BE BROKEN ON THESE STRANDS FOR A DISTANCE OF 6'-0" FROM END OF CORED SLAB UNIT. SEE STANDARD SPECIFICATIONS, ARTICLE 1078-7.

◇ BOND SHALL BE BROKEN ON THESE STRANDS FOR A DISTANCE OF 12'-0" FROM END OF CORED SLAB UNIT. SEE STANDARD SPECIFICATIONS, ARTICLE 1078-7.

FIXED END

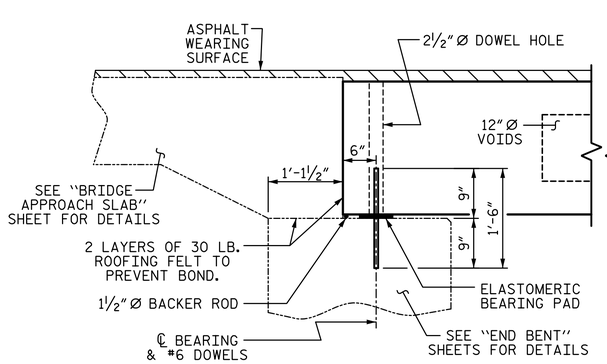

SECTION AT END BENT

FIXED END FIXED END

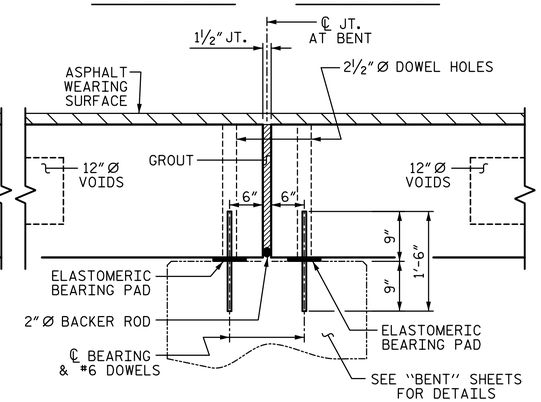

SECTION AT BENT

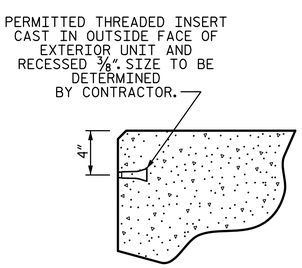

THREADED INSERT DETAIL

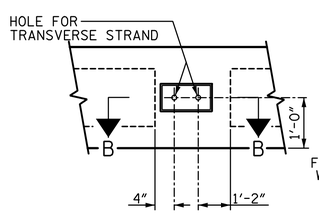

ELEVATION VIEW

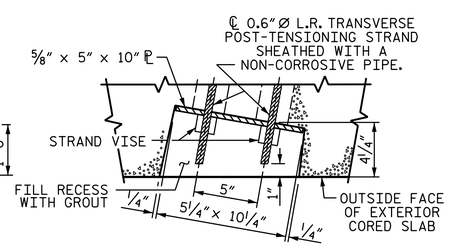

SECTION B-B

GROUTED RECESS AT END OF POST-TENSIONED STRAND FOR CORED SLABS

DEBONDING LEGEND

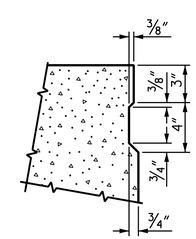

SHEAR KEY DETAIL

NOTE: OMIT SHEAR KEY ON OUTSIDE FACE OF EXTERIOR CORED SLABS.

PROJECT NO. B-4958
GUILFORD COUNTY
STATION: 16+54.00 -L-

SHEET 1 OF 5

STATE OF NORTH CAROLINA
DEPARTMENT OF TRANSPORTATION
RALEIGH

SUPERSTRUCTURE
3'-0" X 2'-0"
PRESTRESSED CONCRETE CORED SLAB UNIT
105° SKEW

PLANS PREPARED BY:
SIMPSON ENGINEERS & ASSOCIATES
5640 Dillard Drive
Suite 200
Cary, NC 27518
(919) 852-0468
(919) 852-0598 (Fax)
www.simpsonengr.com
LICENSURE NO. C-2521

NORTH CAROLINA PROFESSIONAL SEAL 11268 ENGINEER BETSY S. COX
4/10/2018

DOCUMENT NOT CONSIDERED FINAL UNLESS ALL SIGNATURES COMPLETED

REVISIONS						SHEET NO.
NO.	BY:	DATE:	NO.	BY:	DATE:	S-6
1			3			TOTAL SHEETS
2			4			27

DRAWN BY:	S.D. COOPER	DATE:	4-18
CHECKED BY:	B.S. COX	DATE:	4-18
DESIGN ENGINEER OF RECORD:	B.S. COX	DATE:	4-18

4/10/2018 8:59:52 AM G:\Projects\2016\Division 7 TIP (Mott Macdonald)\B-4958 Guilford 106 (105 24CSU 2BMR)\Structures\Drawings\Final\401_B4958_SMU_SUPER.dgn

DocuSign Envelope ID: 6DEB83C1-BD30-4262-8F7C-6FB53D85B375

4/10/2018 8:59:52 AM G:\Projects\2016\Division 7 TIP (Mott Macdonald)\B-4958 Guilford 106 (105 24CSU 2BMR)\Structures\Drawings\Final\401_B4958_SMU_SUPER.dgn

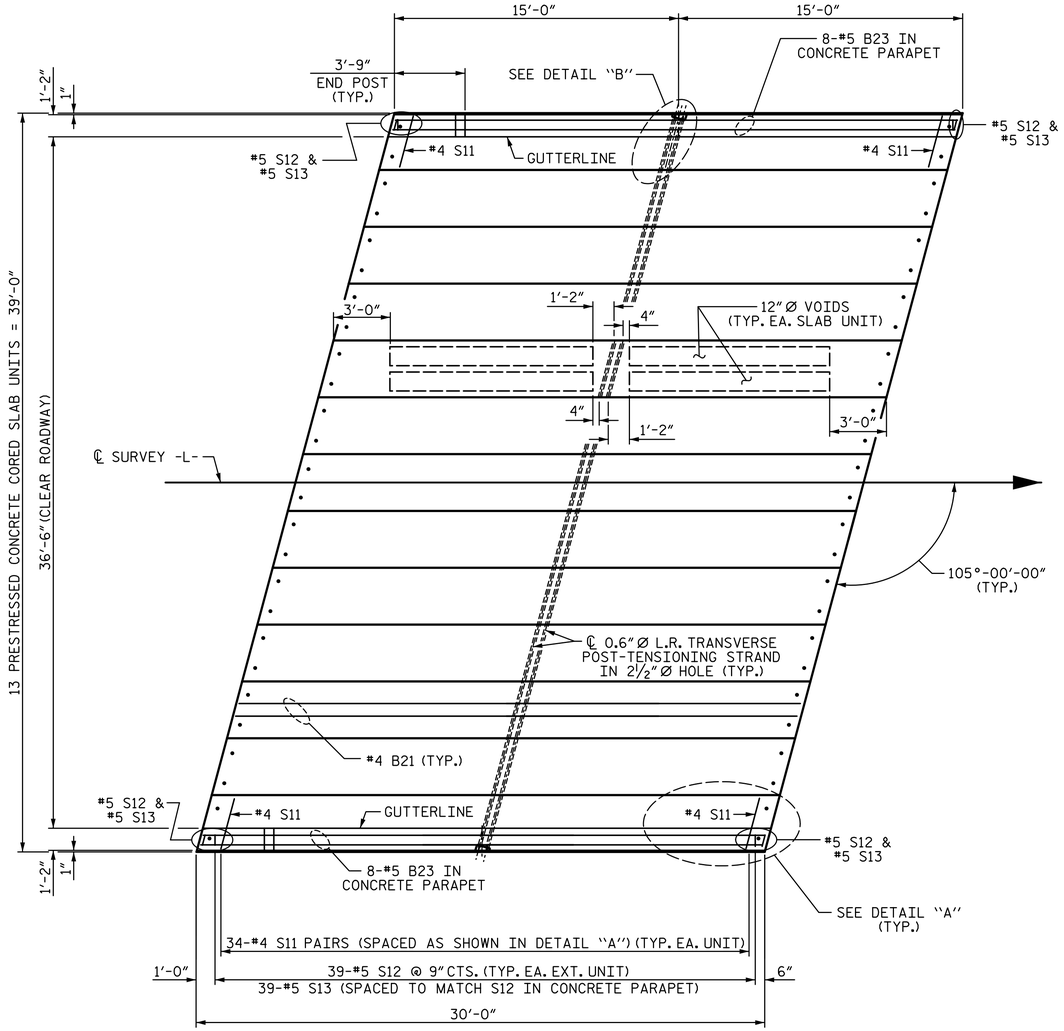

PLAN OF SPAN A

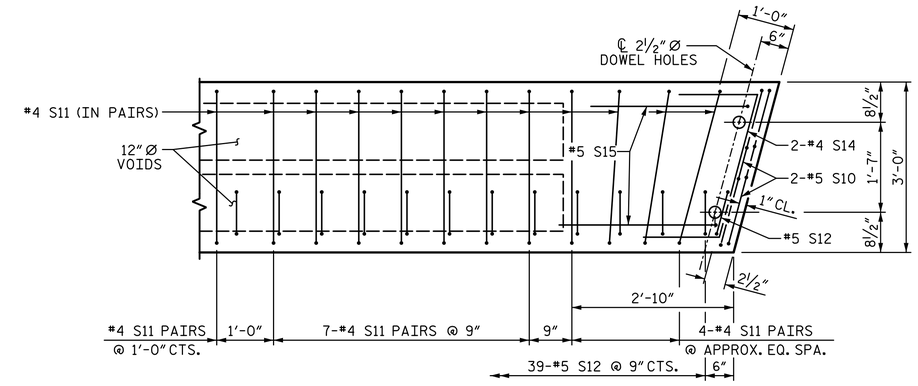

DETAIL "A"

(SIMILAR EACH END OF UNIT)
NOTE: EXTERIOR UNIT SHOWN - INTERIOR UNIT SIMILAR EXCEPT OMIT #5 S12 BARS.

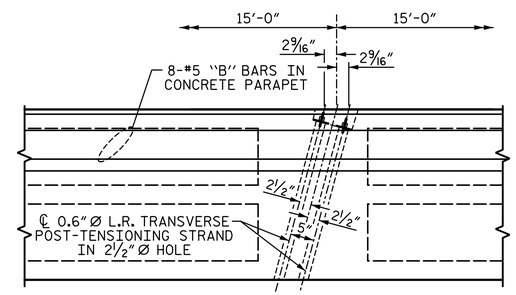

DETAIL "B"

#4 S11 BARS MAY BE SHIFTED AS NECESSARY TO MAINTAIN 1" CLEAR TO GROUTED RECESS AND 2½"Ø TRANSVERSE POST-TENSIONING STRAND HOLES

PROJECT NO. B-4958
GUILFORD COUNTY
STATION: 16+54.00 -L-

SHEET 2 OF 5

STATE OF NORTH CAROLINA
DEPARTMENT OF TRANSPORTATION
RALEIGH

SUPERSTRUCTURE

PLAN OF SPAN A (30'-0" UNIT) 36'-6" CLEAR ROADWAY

105° SKEW

PLANS PREPARED BY:

SIMPSON ENGINEERS & ASSOCIATES
5640 Dillard Drive
Suite 200
Cary, NC 27518
(919) 852-0468
(919) 852-0598 (Fax)
www.simpsonengr.com
LICENSURE NO. C-2521

NORTH CAROLINA PROFESSIONAL SEAL 11268 ENGINEER BETSY S. COX
4/10/2018

DOCUMENT NOT CONSIDERED FINAL UNLESS ALL SIGNATURES COMPLETED

REVISIONS								SHEET NO.
NO.	BY:	DATE:	NO.	BY:	DATE:			S-7
1			3					TOTAL SHEETS
2			4					27

DRAWN BY:	S.D. COOPER	DATE:	4-18
CHECKED BY:	B.S. COX	DATE:	4-18
DESIGN ENGINEER OF RECORD:	B.S. COX	DATE:	4-18

DocuSign Envelope ID: 6DEB83C1-BD30-4262-8F7C-6FB53D85B375

4/10/2018 8:59:52 AM G:\Projects\2016\Division 7 TIP (Mott Macdonald)\B-4958 Guilford 106 (105 24CSU 2BMR)\Structures\Drawings\Final\401_B4958_SMU_SUPER.dgn

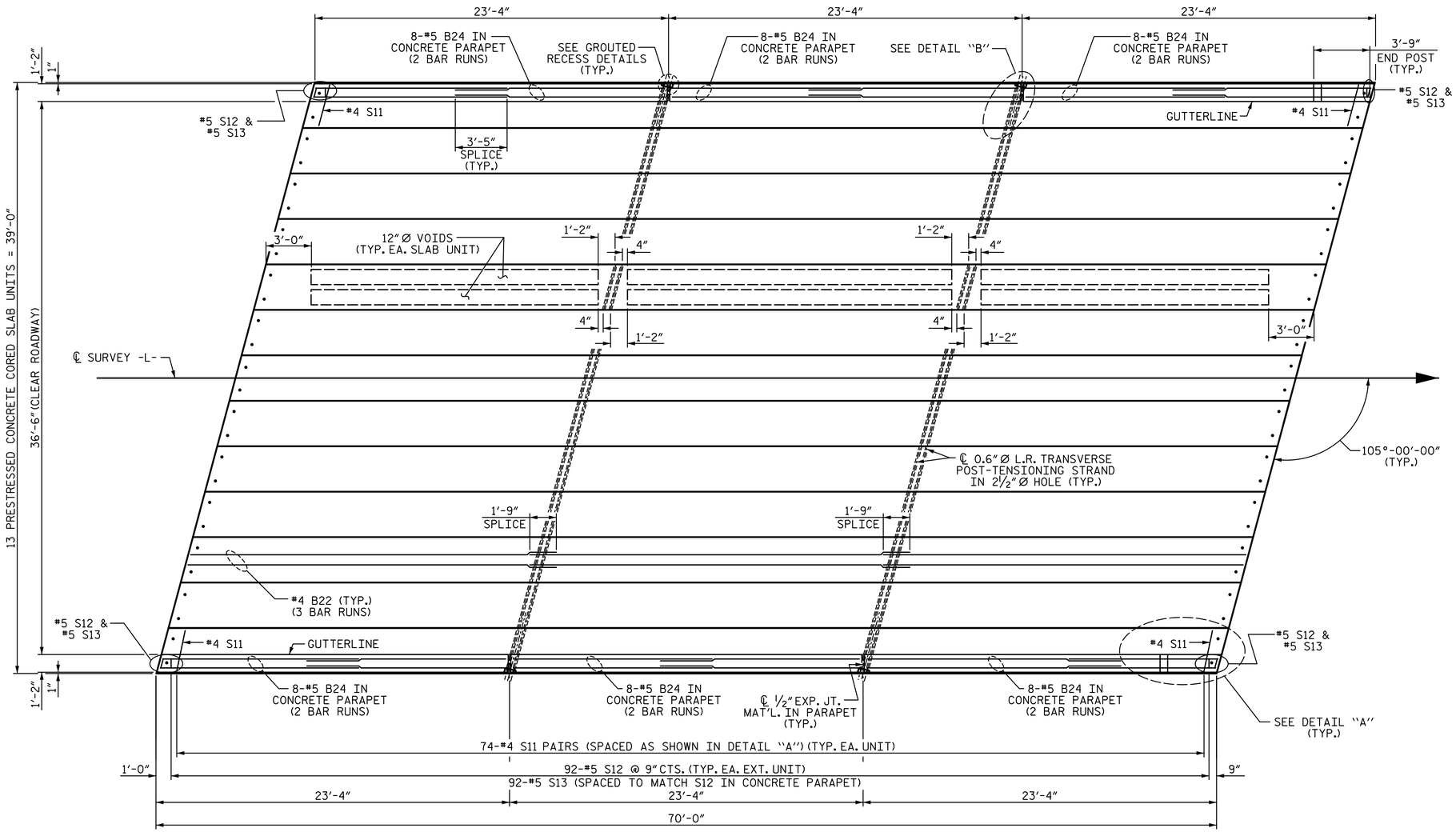

PLAN OF SPAN B

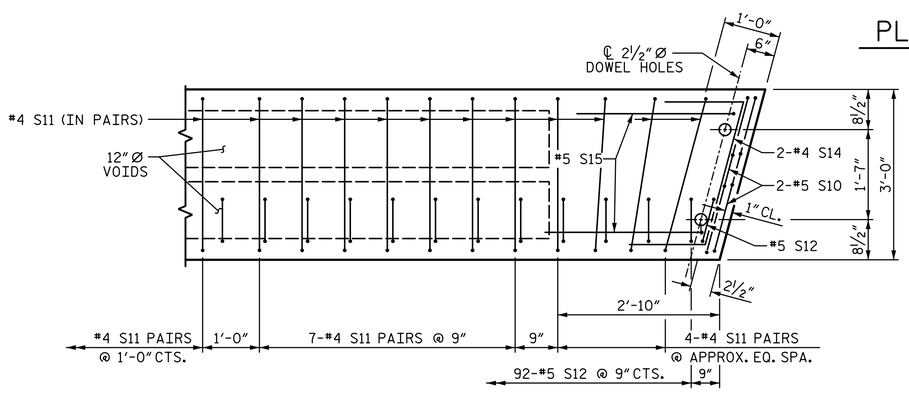

DETAIL "A"

(SIMILAR EACH END OF UNIT)
NOTE: EXTERIOR UNIT SHOWN - INTERIOR UNIT SIMILAR EXCEPT OMIT #5 S12 BARS.

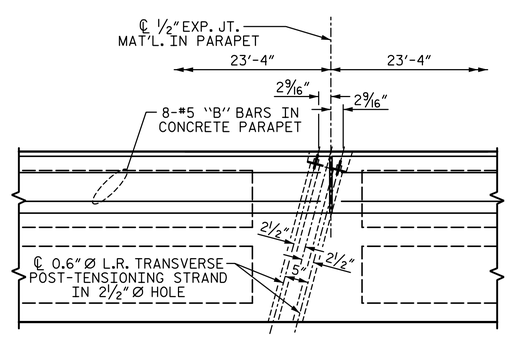

DETAIL "B"

#4 S11 BARS MAY BE SHIFTED AS NECESSARY TO MAINTAIN 1" CLEAR TO GROUTED RECESS AND 2½" Ø TRANSVERSE POST-TENSIONING STRAND HOLES

PROJECT NO. B-4958
GUILFORD COUNTY
STATION: 16+54.00 -L-

SHEET 3 OF 5

STATE OF NORTH CAROLINA
DEPARTMENT OF TRANSPORTATION
RALEIGH

SUPERSTRUCTURE

PLAN OF SPAN B
(70'-0" UNIT)
36'-6" CLEAR ROADWAY
105° SKEW

PLANS PREPARED BY:
SIMPSON ENGINEERS & ASSOCIATES
5640 Dillard Drive
Suite 200
Cary, NC 27518
(919) 852-0468
(919) 852-0598 (Fax)
www.simpsonengr.com
LICENSURE NO. C-2521

NORTH CAROLINA PROFESSIONAL SEAL 11268 ENGINEER BETSY S. COX
4/10/2018

DOCUMENT NOT CONSIDERED FINAL UNLESS ALL SIGNATURES COMPLETED

REVISIONS						SHEET NO.
NO.	BY:	DATE:	NO.	BY:	DATE:	S-8
1			3			TOTAL SHEETS
2			4			27

DRAWN BY: S.D. COOPER DATE: 4-18
CHECKED BY: B.S. COX DATE: 4-18
DESIGN ENGINEER OF RECORD: B.S. COX DATE: 4-18

DocuSign Envelope ID: 6DEB83C1-BD30-4262-8F7C-6FB53D85B375

4/10/2018 8:59:52 AM G:\Projects\2016\Division 7 TIP (Mott Macdonald)\B-4958 Guilford 106 (105 24CSU 2BMR)\Structures\Drawings\Final\401_B4958_SMU_SUPER.dgn

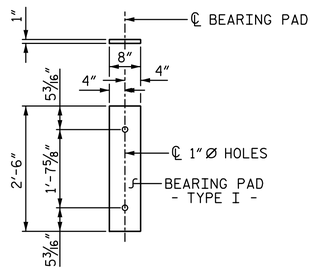

FIXED END

(TYPE I - 52 REQ'D)

ELASTOMERIC BEARING DETAILS

ELASTOMER IN ALL BEARINGS SHALL BE 60 DUROMETER HARDNESS.

BAR TYPES

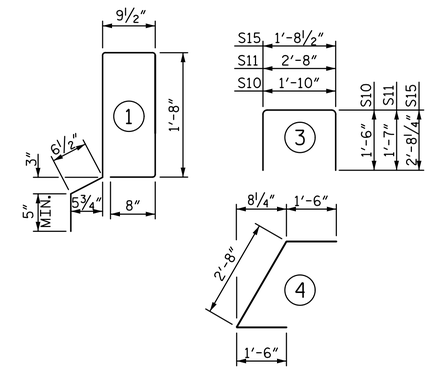

ALL BAR DIMENSIONS ARE OUT TO OUT

NOTES:

ALL PRESTRESSING STRANDS SHALL BE 7-WIRE LOW RELAXATION GRADE 270 STRANDS AND SHALL CONFORM TO AASHTO M203 EXCEPT FOR SAMPLING REQUIREMENTS WHICH SHALL BE IN ACCORDANCE WITH THE STANDARD SPECIFICATIONS.

ALL REINFORCING STEEL CAST WITH THE CORED SLAB SECTIONS SHALL BE GRADE 60 AND SHALL BE INCLUDED IN THE UNIT PRICE BID FOR PRESTRESSED CONCRETE CORED SLABS.

RECESSES FOR TRANSVERSE STRANDS SHALL BE GROUTED AFTER THE TENSIONING OF THE STRANDS.

THE 2 1/2" Ø DOWEL HOLES AT FIXED ENDS OF SLAB SECTIONS SHALL BE FILLED WITH NON-SHRINK GROUT.

THE BACKER RODS SHALL CONFORM TO THE REQUIREMENTS OF TYPE M BOND BREAKER. SEE SECTION 1028 OF THE STANDARD SPECIFICATIONS.

WHEN CORED SLABS ARE CAST, AN INTERNAL HOLD-DOWN SYSTEM SHALL BE EMPLOYED TO PREVENT VOIDS FROM RISING OR MOVING SIDEWAYS. AT LEAST SIX WEEKS PRIOR TO CASTING CORED SLABS, THE CONTRACTOR SHALL SUBMIT TO THE ENGINEER FOR REVIEW AND COMMENT, DETAILED DRAWINGS OF THE PROPOSED HOLD-DOWN SYSTEM. IN ADDITION TO STRUCTURAL DETAILS, LOCATION AND SPACING OF THE HOLD-DOWNS SHALL BE INDICATED.

THE TRANSFER OF LOAD FROM THE ANCHORAGES TO THE CORED SLAB UNIT SHALL BE DONE WHEN THE CONCRETE HAS REACHED A COMPRESSIVE STRENGTH OF NOT LESS THAN THE REQUIRED STRENGTH SHOWN IN THE "CONCRETE RELEASE STRENGTH" TABLE.

ALL REINFORCING STEEL IN CONCRETE PARAPETS SHALL BE EPOXY COATED.

PRESTRESSING STRANDS SHALL BE CUT FLUSH WITH THE CORED SLAB UNIT ENDS.

APPLY EPOXY PROTECTIVE COATING TO CORED SLAB UNIT ENDS.

GROOVED CONTRACTION JOINTS, 1/2" IN DEPTH, SHALL BE TOOLED IN ALL EXPOSED FACES OF THE PARAPET AND IN ACCORDANCE WITH ARTICLE 825-10(B) OF THE STANDARD SPECIFICATIONS. A CONTRACTION JOINT SHALL BE LOCATED AT EACH THIRD POINT BETWEEN PARAPET EXPANSION JOINTS. ONLY ONE CONTRACTION JOINT IS REQUIRED AT MIDPOINT OF PARAPET SEGMENTS LESS THAN 20 FEET IN LENGTH AND NO CONTRACTION JOINTS ARE REQUIRED FOR THOSE SEGMENTS LESS THAN 10 FEET IN LENGTH.

FLAME CUTTING OF THE TRANSVERSE POST-TENSIONING STRAND IS NOT ALLOWED.

MAINTAIN A SYMMETRIC TENSION FORCE BETWEEN EACH PAIR OF TRANSVERSE POST TENSIONING STRANDS IN THE DIAPHRAGM.

THE #4 S11 STIRRUPS MAY BE SHIFTED AS NECESSARY TO MAINTAIN 1" CLEAR TO THE GROUTED RECESS.

FOR GROUT FOR STRUCTURES, SEE SPECIAL PROVISIONS.

THE PERMITTED THREADED INSERTS ARE DETAILED AS AN OPTION FOR THE CONTRACTOR TO ATTACH FALSEWORK AND FORMWORK DURING CONSTRUCTION.

THE PERMITTED THREADED INSERTS IN THE EXTERIOR UNITS SHALL BE SIZED BY THE CONTRACTOR, SPACED AT 4'-0" CENTERS AND GALVANIZED IN ACCORDANCE WITH SECTION 1076 OF THE STANDARD SPECIFICATIONS. STAINLESS STEEL THREADED INSERTS MAY BE USED AS AN ALTERNATE.

THE PERMITTED THREADED INSERTS SHALL BE GROUTED BY THE CONTRACTOR IMMEDIATELY FOLLOWING REMOVAL OF THE FALSEWORK.

THE COST OF THE PERMITTED THREADED INSERTS SHALL BE INCLUDED IN THE PRICE BID FOR THE PRECAST UNITS.

CORED SLABS REQUIRED

	NUMBER	LENGTH	TOTAL LENGTH
30' UNIT			
EXTERIOR C.S.	2	30'-0"	60'-0"
INTERIOR C.S.	11	30'-0"	330'-0"
TOTAL	13		390'-0"

CORED SLABS REQUIRED

	NUMBER	LENGTH	TOTAL LENGTH
70' UNIT			
EXTERIOR C.S.	2	70'-0"	140'-0"
INTERIOR C.S.	11	70'-0"	770'-0"
TOTAL	13		910'-0"

CONCRETE RELEASE STRENGTH

UNIT	PSI
30' UNITS	4000
70' UNITS	5500

DEAD LOAD DEFLECTION AND CAMBER

	3'-0" x 2'-0"
30' CORED SLAB UNIT	0.6" Ø L.R. STRAND
CAMBER (SLAB ALONE IN PLACE)	5/16" ↑
DEFLECTION DUE TO SUPERIMPOSED DEAD LOAD**	1/16" ↓
FINAL CAMBER	1/4" ↑

** INCLUDES FUTURE WEARING SURFACE

DEAD LOAD DEFLECTION AND CAMBER

	3'-0" x 2'-0"
70' CORED SLAB UNIT	0.6" Ø L.R. STRAND
CAMBER (SLAB ALONE IN PLACE)	2 1/4" ↑
DEFLECTION DUE TO SUPERIMPOSED DEAD LOAD**	3/4" ↓
FINAL CAMBER	1 1/2" ↑

** INCLUDES FUTURE WEARING SURFACE

GRADE 270 STRANDS

	0.6" Ø L.R.
AREA (SQUARE INCHES)	0.217
ULTIMATE STRENGTH (LBS. PER STRAND)	58,600
APPLIED PRESTRESS (LBS. PER STRAND)	43,950

BILL OF MATERIAL FOR ONE 30' CORED SLAB UNIT

				EXTERIOR UNIT		INTERIOR UNIT	
BAR	NUMBER	SIZE	TYPE	LENGTH	WEIGHT	LENGTH	WEIGHT
B21	2	#4	STR	29'-7"	40	29'-7"	40
S10	8	#5	3	4'-10"	40	4'-10"	40
S11	68	#4	3	5'-10"	265	5'-10"	265
*S12	41	#5	1	5'-9"	246		
S14	4	#4	4	5'-8"	15	5'-8"	15
S15	4	#5	3	7'-1"	30	7'-1"	30
REINFORCING STEEL			LB		390		390
* EPOXY COATED REINFORCING STEEL			LB		246		
5000 P.S.I. CONCRETE			CY		5.4		5.4
0.6" Ø L.R. STRANDS			No.		10		10

BILL OF MATERIAL FOR ONE 70' CORED SLAB UNIT

				EXTERIOR UNIT		INTERIOR UNIT	
BAR	NUMBER	SIZE	TYPE	LENGTH	WEIGHT	LENGTH	WEIGHT
B22	6	#4	STR	24'-6"	98	24'-6"	98
S10	8	#5	3	4'-10"	40	4'-10"	40
S11	148	#4	3	5'-10"	577	5'-10"	577
*S12	94	#5	1	5'-9"	564		
S14	4	#4	4	5'-8"	15	5'-8"	15
S15	4	#5	3	7'-1"	30	7'-1"	30
REINFORCING STEEL			LB		760		760
* EPOXY COATED REINFORCING STEEL			LB		564		
7000 P.S.I. CONCRETE			CY		12.0		12.0
0.6" Ø L.R. STRANDS			No.		28		28

PROJECT NO. B-4958

GUILFORD COUNTY

STATION: 16+54.00 -L-

SHEET 4 OF 5

STATE OF NORTH CAROLINA
DEPARTMENT OF TRANSPORTATION
RALEIGH

SUPERSTRUCTURE

3'-0" X 2'-0"
PRESTRESSED CONCRETE
CORED SLAB UNIT

105° SKEW

PLANS PREPARED BY:

SIMPSON ENGINEERS & ASSOCIATES
5640 Dillard Drive
Suite 200
Cary, NC 27518
(919) 852-0468
(919) 852-0598 (Fax)
www.simpsonengr.com
LICENSURE NO. C-2521

NORTH CAROLINA PROFESSIONAL SEAL 11268 ENGINEER BETSY S. COX
4/10/2018

DOCUMENT NOT CONSIDERED FINAL UNLESS ALL SIGNATURES COMPLETED

REVISIONS						SHEET NO.
NO.	BY:	DATE:	NO.	BY:	DATE:	S-9
1			3			TOTAL SHEETS
2			4			27

DRAWN BY: S.D. COOPER DATE: 4-18
CHECKED BY: B.S. COX DATE: 4-18
DESIGN ENGINEER OF RECORD: B.S. COX DATE: 4-18

DocuSign Envelope ID: 6DEB83C1-BD30-4262-8F7C-6FB53D85B375

4/10/2018 8:59:53 AM G:\Projects\2016\Division 7 TIP (Mott Macdonald)\B-4958 Guilford 106 (105 24CSU 2BMR)\Structures\Drawings\Final\401_B4958_SMU_SUPER.dgn

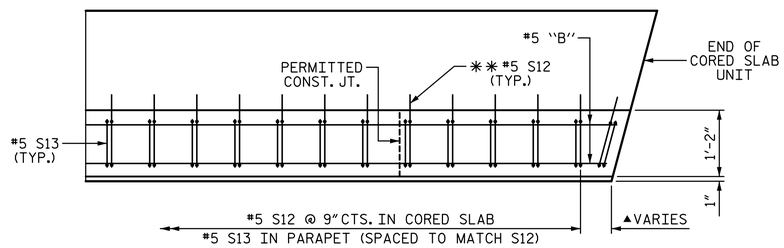

PLAN OF PARAPET

▲ SEE "PLAN OF SPAN" SHEETS FOR DIMENSIONS.

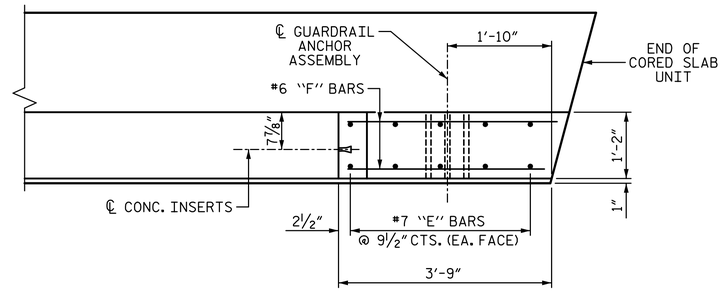

PLAN OF END POST

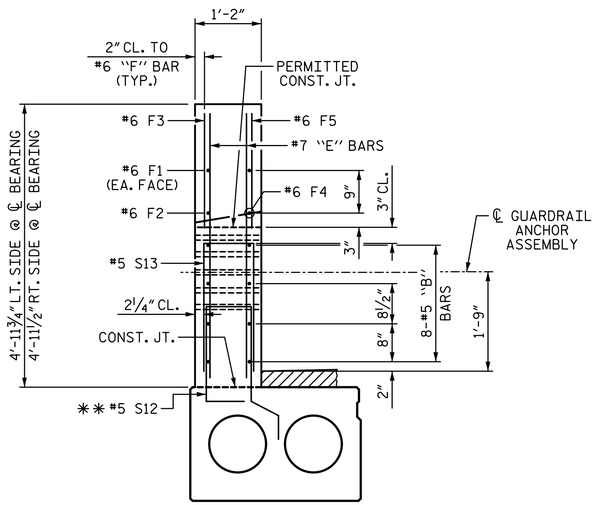

END VIEW

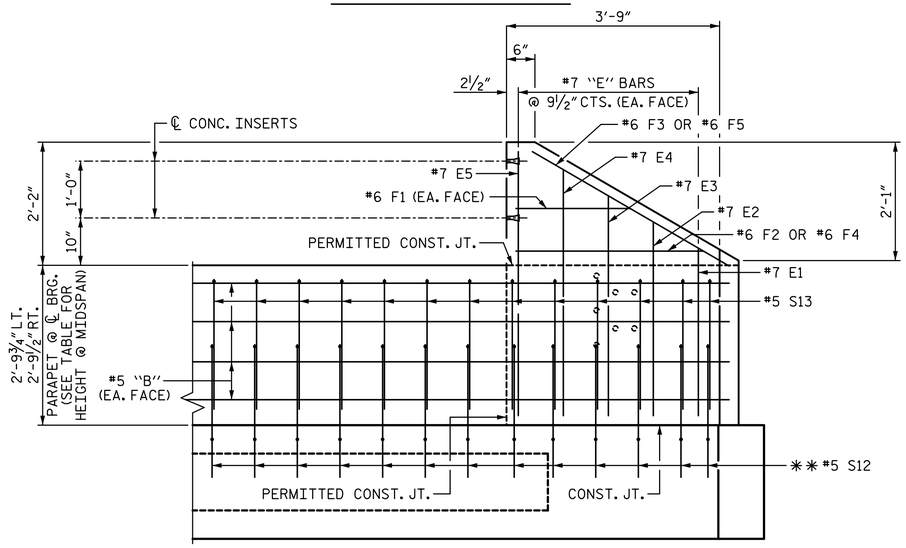

ELEVATION

PARAPET AND END POST FOR TWO BAR METAL RAIL

✱✱#5 S12 BARS ARE INCLUDED IN THE BILL OF MATERIAL FOR CORED SLAB UNIT

BAR TYPES

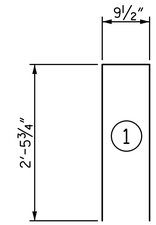

ALL BAR DIMENSIONS ARE OUT TO OUT

BILL OF MATERIAL
PARAPET AND END POSTS

BAR	NO.	SIZE	TYPE	LENGTH	WEIGHT
✱B23	16	#5	STR	29'-6"	492
✱B24	96	#5	STR	13'-4"	1335
✱E1	8	#7	STR	2'-11"	48
✱E2	8	#7	STR	3'-4"	55
✱E3	8	#7	STR	3'-10"	63
✱E4	8	#7	STR	4'-4"	71
✱E5	8	#7	STR	4'-7"	75
✱F1	8	#6	STR	1'-11"	23
✱F2	4	#6	STR	3'-1"	19
✱F3	4	#6	STR	3'-7"	22
✱F4	4	#6	STR	3'-4"	20
✱F5	4	#6	STR	3'-10"	23
✱S13	270	#5	1	5'-9"	1619

✱ EPOXY COATED REINFORCING STEEL 3865 LB

CLASS AA CONCRETE 24.7 CY

1'-2" X 2'-9¾" CONCRETE PARAPET 200.26 LF

GUTTERLINE ASPHALT THICKNESS & PARAPET HEIGHT

	ASPHALT OVERLAY THICKNESS @ MID-SPAN		PARAPET HEIGHT @ MID-SPAN	
	LT.	RT.	LT.	RT.
30' UNITS	3½"	3¼"	2'-9½"	2'-9¼"
70' UNITS	2¼"	2"	2'-8¼"	2'-8"

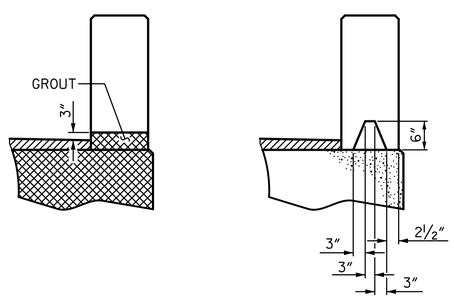

SECTION T-T

AT OPEN JOINT AT BENT (THIS IS TO BE USED WHERE FOAM JOINT IS NOT USED)

SECTION S-S

AT DAM IN OPEN JOINT (THIS IS TO BE USED ONLY WHEN SLIP FORM IS USED)

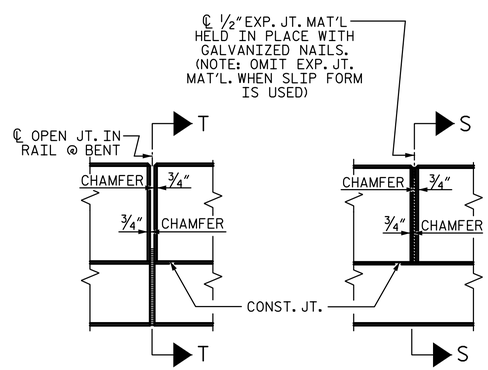

ELEVATION AT EXPANSION JOINTS

PROJECT NO. B-4958

GUILFORD COUNTY

STATION: 16+54.00 -L-

SHEET 5 OF 5

STATE OF NORTH CAROLINA
DEPARTMENT OF TRANSPORTATION
RALEIGH

SUPERSTRUCTURE

CONCRETE PARAPET DETAILS FOR 2 BAR METAL RAIL

PLANS PREPARED BY:
SIMPSON ENGINEERS & ASSOCIATES
5640 Dillard Drive
Suite 200
Cary, NC 27518
(919) 852-0468
(919) 852-0598 (Fax)
www.simpsonengr.com
LICENSURE NO. C-2521

NORTH CAROLINA PROFESSIONAL SEAL 11268 ENGINEER BETSY S. COX
4/10/2018

DOCUMENT NOT CONSIDERED FINAL UNLESS ALL SIGNATURES COMPLETED

REVISIONS							SHEET NO.
NO.	BY:	DATE:	NO.	BY:	DATE:		S-10
1			3				TOTAL SHEETS
2			4				27

DRAWN BY:	S.D. COOPER	DATE:	4-18
CHECKED BY:	B.S. COX	DATE:	4-18
DESIGN ENGINEER OF RECORD:	B.S. COX	DATE:	4-18

DocuSign Envelope ID: 6DEB83C1-BD30-4262-8F7C-6FB53D85B375

4/10/2018 8:59:53 AM G:\Projects\2016\Division 7 TIP (Mott Macdonald)\B-4958 Guilford 106 (105 24CSU 2BMR)\Structures\Drawings\Final\401_B4958_SMU_SUPER.dgn

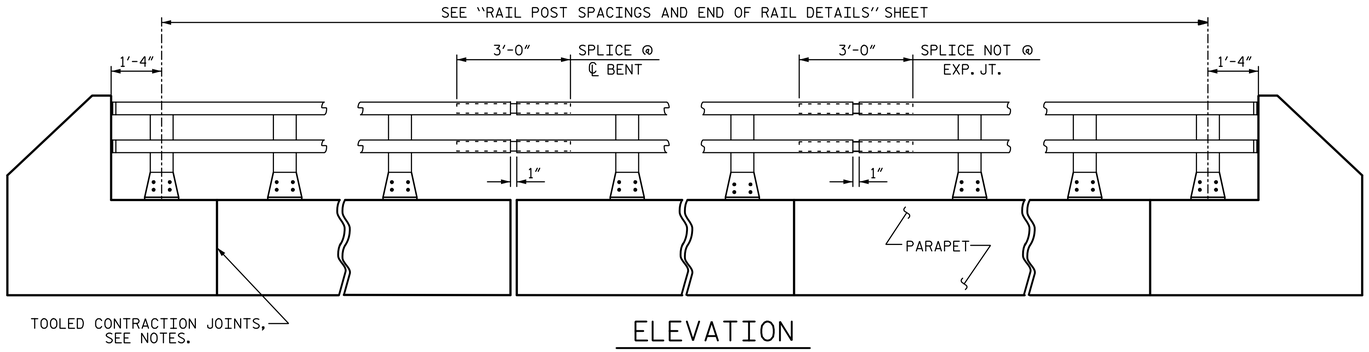

ELEVATION

NOTE : FOR ATTACHMENT OF METAL RAIL TO END POST, SEE "RAIL POST SPACING AND END OF RAIL DETAILS" SHEET.

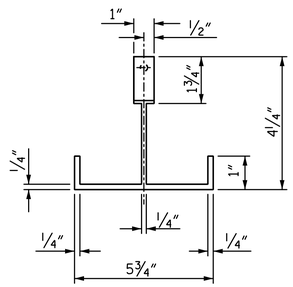

PLAN

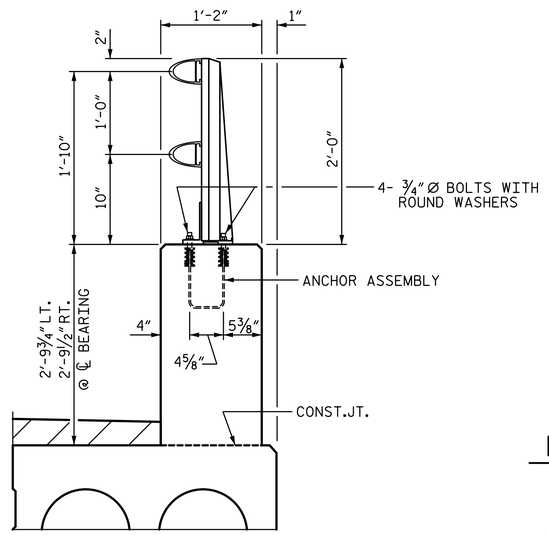

SECTION THRU PARAPET AND RAIL

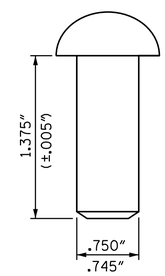

RIVET DETAIL

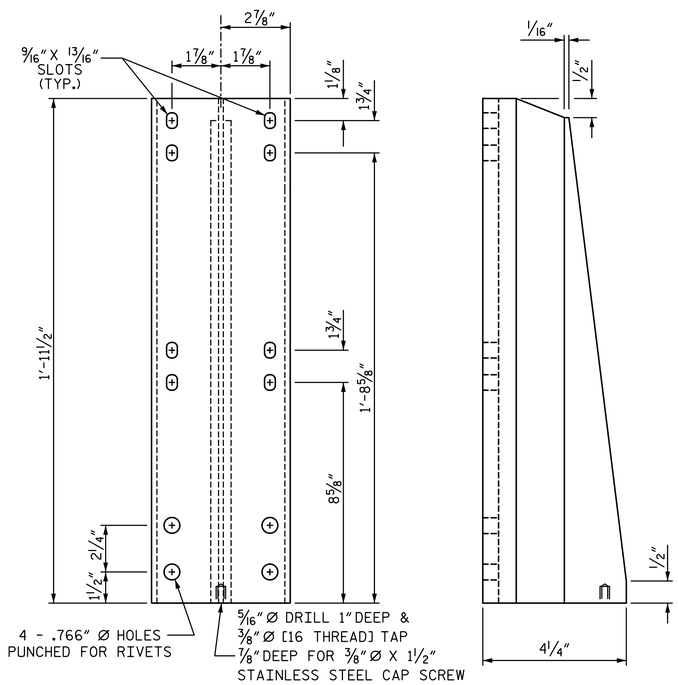

FRONT ELEVATION

SIDE ELEVATION

DETAILS OF POST

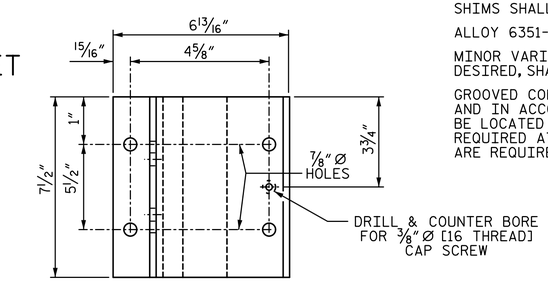

PLAN

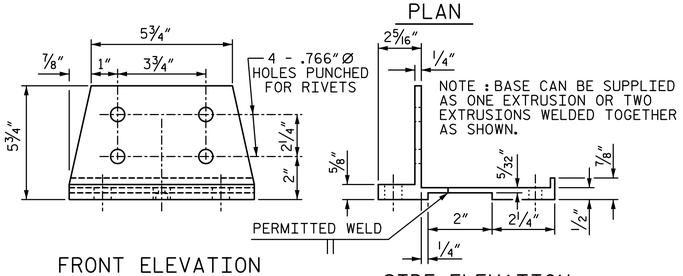

FRONT ELEVATION

SIDE ELEVATION

POST BASE DETAILS

NOTES:

AT THE CONTRACTOR'S OPTION, METAL RAIL MAY BE EITHER ALUMINUM OR GALVANIZED STEEL IN ACCORDANCE WITH THE REQUIREMENTS OF THE GENERAL NOTES AND THE FOLLOWING SPECIFICATIONS FOR THE ALTERNATE MATERIALS; HOWEVER, THE CONTRACTOR WILL BE REQUIRED TO USE THE SAME RAIL MATERIAL ON ALL STRUCTURES ON THE PROJECT FOR WHICH METAL RAIL IS DESIGNATED.

UNLESS OTHERWISE REQUIRED IN THE CONTRACT DOCUMENTS, THE CONTRACTOR HAS THE OPTION TO USE AN ALTERNATE TO THE 2 BAR METAL RAIL. THE ALTERNATE RAIL SHALL MEET THE REQUIREMENTS OF THE AASHTO LRFD BRIDGE DESIGN SPECIFICATIONS AND MUST BE LISTED ON THE DEPARTMENT'S APPROVED PRODUCTS LIST (APL) UNDER "2 BAR METAL RAIL ALTERNATE". ADJUSTMENTS TO THE CONCRETE PARAPET WILL NOT BE ALLOWED.

ALUMINUM RAILS:

MATERIAL FOR POSTS, BASES AND RAILS, EXPANSION BARS AND CLAMP BARS SHALL BE ASTM B-221 ALLOY 6061-T6.

MATERIAL FOR RIVETS SHALL BE ASTM B316 ALLOY 6061-T6. RIVETS SHALL BE STANDARD BUTTON HEAD AND CONE POINT COLD DRIVEN AS PER DRAWING.

THE BASE OF RAIL POSTS, OR ANY OTHER ALUMINUM SURFACE IN CONTACT WITH CONCRETE SHALL BE THOROUGHLY COATED WITH AN ALUMINUM IMPREGNATED CAULKING COMPOUND OF APPROVED QUALITY.

MATERIAL FOR SHIMS TO BE ASTM B209 ALLOY 6061-T6.

GALVANIZED STEEL RAILS:

MATERIAL AND GALVANIZING ARE TO CONFORM TO THE FOLLOWING SPECIFICATIONS:

POST, POST BASES, RAILS, EXPANSION BARS AND CLAMP BARS: AASHTO M270 GRADE 36 STRUCTURAL STEEL - GALVANIZED TO AASHTO M111.

RIVETS: RIVETS SHALL MEET THE REQUIREMENTS OF ASTM A502 FOR GRADE 1 RIVETS.

THE CUT ENDS OF GALVANIZED STEEL RAILING, AFTER GRINDING SMOOTH SHALL BE GIVEN TWO COATS OF ZINC RICH PAINT MEETING THE REQUIREMENTS OF FEDERAL SPECIFICATION MIL-P-26915 USAF TYPE 1, OR OF FEDERAL SPECIFICATIONS TT-P-641.

SHIMS: SHIMS SHALL MEET THE REQUIREMENTS OF ASTM A570 FOR GRADE 33 OR A611 FOR GRADE C AND SHALL BE GALVANIZED IN ACCORDANCE WITH AASHTO M111.

RAIL CAPS: RAIL CAPS SHALL MEET THE REQUIREMENTS OF ASTM A570 FOR GRADE 33 OR A611 FOR GRADE C AND SHALL BE GALVANIZED IN ACCORDANCE WITH AASHTO M111.

GENERAL NOTES:

RAILING SHALL BE CONTINUOUS FROM END POST TO END POST OF BRIDGE. EACH JOINT IN RAIL LENGTH SHALL BE SPLICED AS DETAILED. PANEL LENGTHS OF RAIL SHALL BE ATTACHED TO A MINIMUM OF THREE POSTS.

FOR END OF RAIL TO CLEAR FACE OF CONCRETE END POST DIMENSION, SEE "RAIL POST SPACING AND END OF RAIL DETAILS" SHEET.

CAP SCREWS SHALL BE ASTM F593 ALLOY 305 STAINLESS STEEL. WASHERS SHALL MEET THE REQUIREMENTS OF ASTM F844 EXCEPT THEY SHALL BE MADE FROM ALLOY 304 STAINLESS STEEL.

CERTIFIED MILL REPORTS ARE REQUIRED FOR RAILS AND POSTS. SHOP INSPECTION IS NOT REQUIRED.

METAL RAIL POSTS SHALL BE SET NORMAL TO CURB GRADE.

METHOD OF MEASUREMENT FOR METAL RAILS: FOR LENGTH OF METAL RAILS TO BE PAID FOR, SEE THE STANDARD SPECIFICATIONS.

CURVED RAIL USAGE: WHERE RAILS ARE TO BE USED ON BRIDGES ON HORIZONTAL AND/OR VERTICAL CURVATURE THE CONTRACTOR MAY, AT HIS OPTION, HAVE THE REQUIRED CURVATURE IN THE RAIL FORMED IN THE SHOP OR IN THE FIELD. IN EITHER EVENT, THE RAIL SHALL CONFORM WITHOUT BUCKLING OR KINKING TO THE REQUIRED CURVATURE IN A UNIFORM MANNER ACCEPTABLE TO THE ENGINEER.

TO INSURE FUTURE IDENTIFICATION OF THE FABRICATOR, A PERMANENT IDENTIFYING MARK SHALL BE PLACED ON EACH POST. THE METHOD OF MARKING AND LOCATION SHALL BE SUCH THAT IT DOES NOT DETRACT FROM THE APPEARANCE OF THE POST, BUT REMAINS VISIBLE AFTER RAIL PLACEMENT.

SHIMS SHALL BE USED AS NECESSARY FOR POST ALIGNMENT.

ALLOY 6351-T5 MAY BE SUBSTITUTED FOR ALLOY 6061-T6 WHERE APPLICABLE.

MINOR VARIATIONS IN DETAILS OF METAL RAIL WILL BE CONSIDERED. DETAILS OF SUCH VARIATIONS, IF DESIRED, SHALL BE SUBMITTED FOR APPROVAL.

GROOVED CONTRACTION JOINTS, 1/2" IN DEPTH, SHALL BE TOOLED IN ALL EXPOSED FACES OF THE PARAPET AND IN ACCORDANCE WITH ARTICLE 825-10(B) OF THE STANDARD SPECIFICATIONS. A CONTRACTION JOINT SHALL BE LOCATED AT EACH THIRD POINT BETWEEN PARAPET EXPANSION JOINTS. ONLY ONE CONTRACTION JOINT IS REQUIRED AT MIDPOINT OF PARAPET SEGMENTS LESS THAN 20 FEET IN LENGTH AND NO CONTRACTION JOINTS ARE REQUIRED FOR THOSE SEGMENTS LESS THAN 10 FEET IN LENGTH.

PAY LENGTH = 184.64 LF

PROJECT NO. B-4958

GUILFORD COUNTY

STATION: 16+54.00 -L-

SHEET 1 OF 2

STATE OF NORTH CAROLINA
DEPARTMENT OF TRANSPORTATION
RALEIGH
SUPERSTRUCTURE

2 BAR METAL RAIL

DRAWN BY: S.D. COOPER	DATE: 4-18	
CHECKED BY: B.S. COX	DATE: 4-18	
DESIGN ENGINEER OF RECORD: B.S. COX	DATE: 4-18	

PLANS PREPARED BY:

SIMPSON ENGINEERS & ASSOCIATES
5640 Dillard Drive
Suite 200
Cary, NC 27518
(919) 852-0468
(919) 852-0598 (Fax)
www.simpsonengr.com
LICENSURE NO. C-2521

NORTH CAROLINA PROFESSIONAL SEAL 11268 ENGINEER BETSY S. COX
4/10/2018

DOCUMENT NOT CONSIDERED FINAL UNLESS ALL SIGNATURES COMPLETED

REVISIONS						
NO.	BY:	DATE:	NO.	BY:	DATE:	
1			3			
2			4			

SHEET NO. S-11

TOTAL SHEETS 27

DocuSign Envelope ID: 6DEB83C1-BD30-4262-8F7C-6FB53D85B375

4/10/2018 8:59:53 AM G:\Projects\2016\Division 7 TIP (Mott Macdonald)\B-4958 Guilford 106 (105 24CSU 2BMR)\Structures\Drawings\Final\401_B4958_SMU_SUPER.dgn

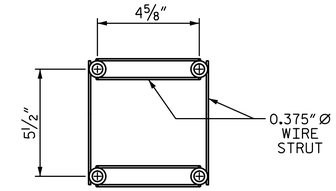

PLAN

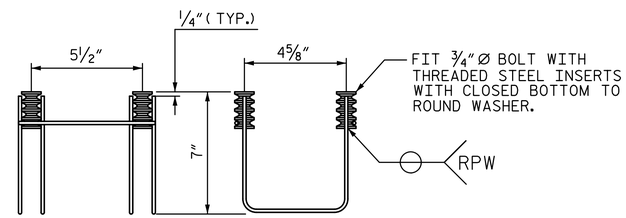

SIDE VIEW ELEVATION

4-BOLT METAL RAIL ANCHOR ASSEMBLY

(40 ASSEMBLIES REQUIRED)

STRUCTURAL CONCRETE ANCHOR ASSEMBLY NOTES:

THE STRUCTURAL CONCRETE ANCHOR ASSEMBLY SHALL CONSIST OF THE FOLLOWING COMPONENTS:

A. FERRULES SHALL BE MADE FROM STEEL MEETING THE REQUIREMENTS OF AASHTO M169, GRADE 12L14 AND SHALL HAVE A MINIMUM LENGTH OF THREADS OF 2" FOR 3/4" FERRULES.

B. 4 - 3/4" Ø X 2 1/2" BOLTS WITH WASHERS. BOLTS SHALL CONFORM TO THE REQUIREMENTS OF ASTM A307. BOLTS AND WASHERS SHALL BE GALVANIZED. AT THE CONTRACTOR'S OPTION, STAINLESS STEEL BOLTS AND WASHERS MAY BE USED AS AN ALTERNATE FOR THE 3/4" Ø X 2 1/2" GALVANIZED BOLTS AND WASHERS. THEY SHALL CONFORM TO OR EXCEED THE MECHANICAL REQUIREMENTS OF ASTM A307. THE USE OF THIS ALTERNATE SHALL BE APPROVED BY THE ENGINEER.

C. WIRE STRUT SHOWN IN THE CONCRETE ANCHOR ASSEMBLY DETAIL IS THE MINIMUM ALLOWABLE SIZE AND SHALL HAVE A MINIMUM TENSILE STRENGTH OF 100,000 PSI. AS AN OPTION, A 7/16" Ø WIRE STRUT WITH A MINIMUM TENSILE STRENGTH OF 90,000 PSI IS ACCEPTABLE.

D. THE METAL RAIL ANCHOR ASSEMBLIES TO BE HOT DIPPED GALVANIZED TO CONFORM TO REQUIREMENTS OF AASHTO M111.

E. THE COST OF THE METAL RAIL ANCHOR ASSEMBLY WITH BOLTS AND WASHERS COMPLETE IN PLACE SHALL BE INCLUDED IN THE PRICE BID FOR LINEAR FEET OF METAL RAIL.

F. BOLTS TO BE TIGHTENED ONE-HALF TURN WITH A WRENCH FROM A FINGER-TIGHT POSITION.

THE CONTRACTOR MAY USE ADHESIVELY ANCHORED ANCHOR BOLTS IN PLACE OF THE METAL RAIL ANCHOR ASSEMBLY. LEVEL ONE FIELD TESTING IS REQUIRED, AND THE YIELD LOAD OF THE 3/4" Ø BOLT IS 10 KIPS. FOR ADHESIVELY ANCHORED ANCHOR BOLTS OR DOWELS, SEE THE STANDARD SPECIFICATIONS.

WHEN ADHESIVELY ANCHORED ANCHOR BOLTS ARE USED, BOLTS SHALL MEET THE REQUIREMENTS OF ASTM F593 ALLOY 304 STAINLESS STEEL WITH MINIMUM 75,000 PSI ULTIMATE STRENGTH. NUTS SHALL MEET THE REQUIREMENTS OF ASTM F594 ALLOY 304 STAINLESS STEEL AND WASHERS SHALL MEET THE REQUIREMENTS OF ASTM F844 EXCEPT THEY SHALL BE MADE FROM ALLOY 304 STAINLESS STEEL.

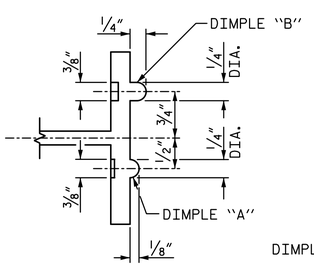

SECTION B-B

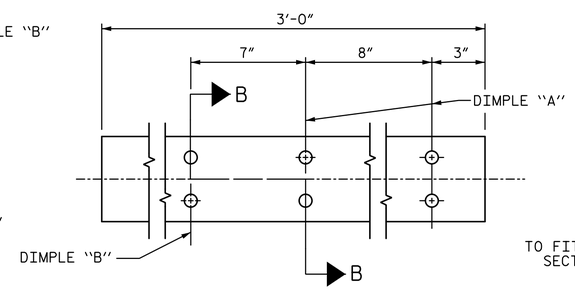

EXPANSION BAR DETAILS

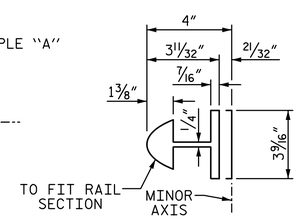

BAR SECTION

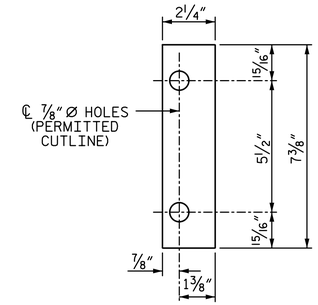

FRONT PLATE

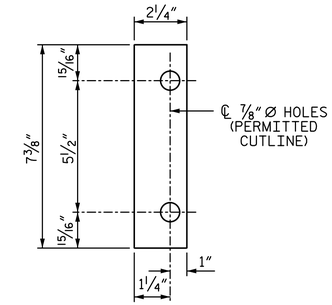

REAR PLATE

SHIM DETAILS

NOTE: SHIMS MAY BE CUT ALONG PERMITTED CUTLINE OR SLOTTED TO EDGE OF PLATE TO FACILITATE PLACEMENT.

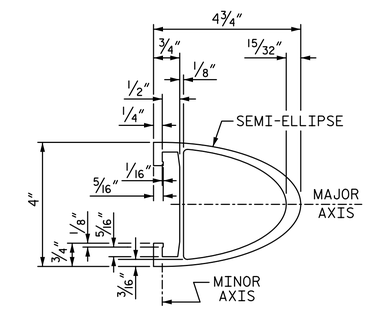

RAIL SECTION

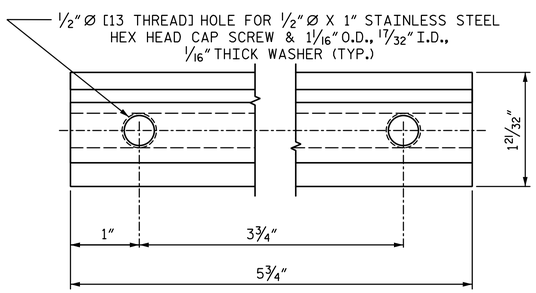

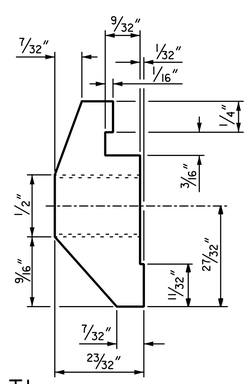

CLAMP BAR DETAIL

(4 REQUIRED PER POST)

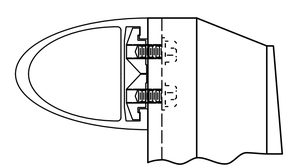

CLAMP ASSEMBLY

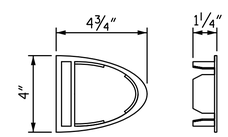

RAIL CAP

PROJECT NO. B-4958

GUILFORD COUNTY

STATION: 16+54.00 -L-

SHEET 2 OF 2

STATE OF NORTH CAROLINA
DEPARTMENT OF TRANSPORTATION
RALEIGH

SUPERSTRUCTURE

2 BAR METAL RAIL

PLANS PREPARED BY:
SIMPSON ENGINEERS & ASSOCIATES
5640 Dillard Drive
Suite 200
Cary, NC 27518
(919) 852-0468
(919) 852-0598 (Fax)
www.simpsonengr.com
LICENSURE NO. C-2521

NORTH CAROLINA PROFESSIONAL SEAL 11268 ENGINEER BETSY S. COX
4/10/2018

DOCUMENT NOT CONSIDERED FINAL UNLESS ALL SIGNATURES COMPLETED

REVISIONS								SHEET NO.
NO.	BY:	DATE:	NO.	BY:	DATE:			S-12
1			3					TOTAL SHEETS
2			4					27

DRAWN BY:	S.D. COOPER	DATE:	4-18
CHECKED BY:	B.S. COX	DATE:	4-18
DESIGN ENGINEER OF RECORD:	B.S. COX	DATE:	4-18

DocuSign Envelope ID: 6DEB83C1-BD30-4262-8F7C-6FB53D85B375

4/10/2018 8:59:53 AM G:\Projects\2016\Division 7 TIP (Mott Macdonald)\B-4958 Guilford 106 (105 24CSU 2BMR)\Structures\Drawings\Final\401_B4958_SMU_SUPER.dgn

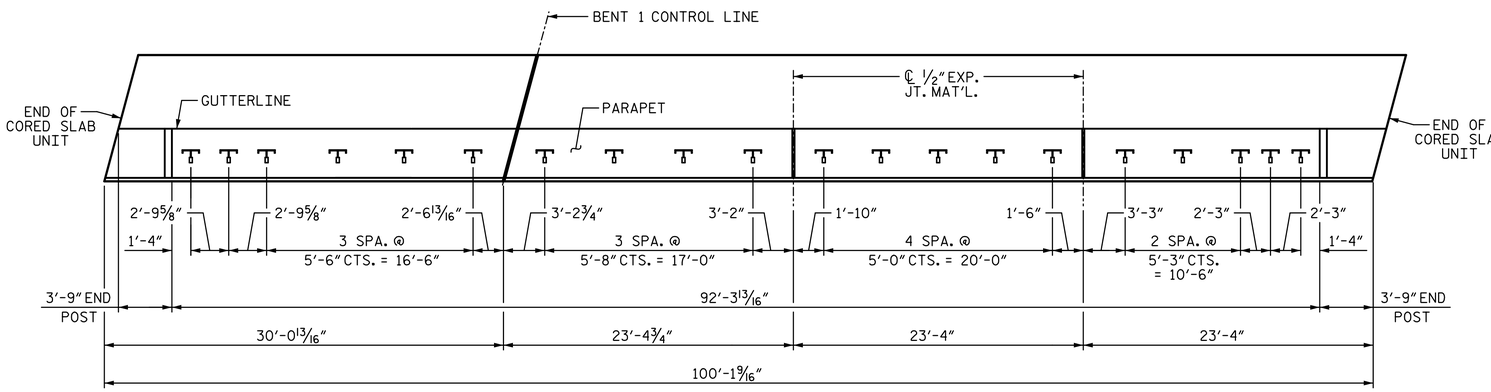

PLAN OF RAIL POST SPACING

(RIGHT EXTERIOR UNIT SHOWN, LEFT EXTERIOR UNIT SIMILAR)

STRUCTURAL CONCRETE INSERT NOTES:

THE STRUCTURAL CONCRETE INSERT ASSEMBLY SHALL CONSIST OF THE FOLLOWING COMPONENTS:

A. FERRULES SHALL BE MADE FROM STEEL MEETING THE REQUIREMENTS OF AASHTO M169, GRADE 12L14 AND SHALL HAVE A MINIMUM LENGTH OF THREADS OF 1 1/2".

B. 1 - 3/4" Ø X 1 5/8" BOLT WITH WASHER. BOLT SHALL CONFORM TO THE REQUIREMENTS OF ASTM A307. BOLT AND WASHER SHALL BE GALVANIZED. (AT THE CONTRACTOR'S OPTION, STAINLESS STEEL BOLT AND WASHER MAY BE USED AS AN ALTERNATE FOR THE 3/4" Ø X 1 5/8" GALVANIZED BOLT AND WASHER. THEY SHALL CONFORM TO OR EXCEED THE MECHANICAL REQUIREMENTS OF ASTM A307. THE USE OF THIS ALTERNATE SHALL BE APPROVED BY THE ENGINEER.)

C. WIRE STRUT SHOWN IN THE CONCRETE INSERT ASSEMBLY DETAIL IS THE MINIMUM ALLOWABLE SIZE AND SHALL HAVE A MINIMUM TENSILE STRENGTH OF 100,000 PSI. AS AN OPTION, A 7/16" Ø WIRE STRUT WITH A MINIMUM TENSILE STRENGTH OF 90,000 PSI IS ACCEPTABLE.

METAL RAIL TO END POST CONNECTION NOTES:

THE METAL RAIL TO END POST CONNECTION SHALL CONSIST OF THE FOLLOWING COMPONENTS:

A. 1/2" PLATES SHALL CONFORM TO AASHTO M270 GRADE 36 AND SHALL BE GALVANIZED AFTER FABRICATION.

B. 3/4" STRUCTURAL CONCRETE INSERT SHALL HAVE A WORKING LOAD SHEAR CAPACITY OF 4800 LBS. THE FERRULES SHALL ENGAGE A 3/4" Ø X 1 5/8" BOLT WITH 2" O.D. WASHER IN PLACE. THE 3/4" Ø X 1 5/8" BOLT SHALL HAVE N. C. THREADS.

C. CAP SCREWS FOR RAIL ATTACHMENT TO ANGLE SHALL CONFORM TO THE REQUIREMENTS OF ASTM F593 ALLOY 305 STAINLESS STEEL. CAP SCREWS TO BE CENTERED IN SLOTS AT 60° F.

D. STANDARD CLAMP BARS (SEE METAL RAIL SHEET).

E. 1/2" Ø PIPE SLEEVES (IF REQUIRED) TO BE GALVANIZED.

THE COST OF THE STANDARD CLAMP BARS AND CAP SCREWS USED IN THE METAL RAIL TO END POST CONNECTION SHALL BE INCLUDED IN THE UNIT CONTRACT PRICE BID FOR LINEAR FEET OF 1 OR 2 BAR METAL RAILS.

THE 3/4" STRUCTURAL CONCRETE INSERT WITH BOLT SHALL BE ASSEMBLED IN THE SHOP.

THE COST OF THE 3/4" STRUCTURAL CONCRETE INSERT ASSEMBLY, AND THE 1/2" PLATES COMPLETE IN PLACE SHALL BE INCLUDED IN THE VARIOUS PAY ITEMS.

THE CONTRACTOR, AT HIS OPTION, MAY USE AN ADHESIVE BONDING SYSTEM IN LIEU OF THE STRUCTURAL CONCRETE INSERT EMBEDDED IN THE END POST. IF THE ADHESIVE BONDING SYSTEM IS USED, THE 3/4" Ø X 1 5/8" BOLT WITH WASHER SHALL BE REPLACED WITH A 3/4" Ø X 6 1/2" BOLT AND 2" O.D. WASHER. ALL SPECIFICATIONS THAT APPLY TO THE 3/4" Ø X 1 5/8" BOLT SHALL APPLY TO THE 3/4" Ø X 6 1/2" BOLT. FIELD TESTING OF THE ADHESIVE BONDING SYSTEM IS NOT REQUIRED.

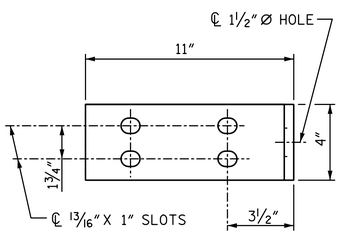

ELEVATION

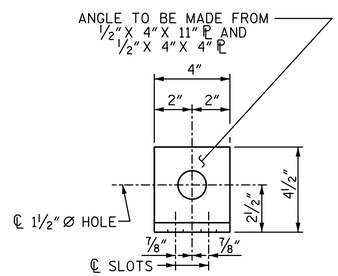

END VIEW

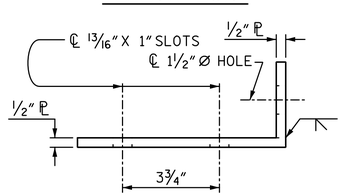

TOP VIEW

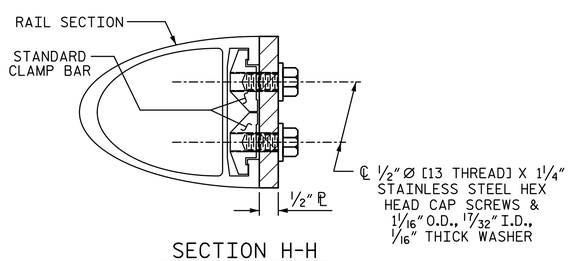

SECTION H-H

DETAILS FOR ATTACHING METAL RAILS TO END POST

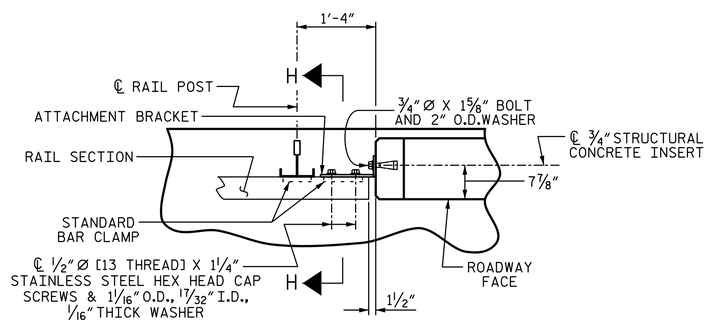

PLAN - RAIL AND END POST

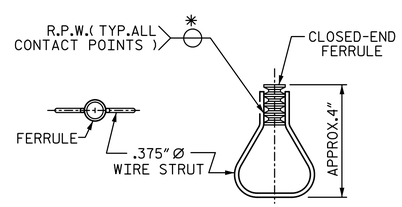

PLAN ELEVATION

STRUCTURAL CONCRETE INSERT

* EACH WELDED ATTACHMENT OF WIRE TO FERRULE SHALL DEVELOP THE TENSILE STRENGTH OF THE WIRE.

PROJECT NO. B-4958
GUILFORD COUNTY
STATION: 16+54.00 -L-

STATE OF NORTH CAROLINA
DEPARTMENT OF TRANSPORTATION
RALEIGH
SUPERSTRUCTURE

RAIL POST SPACING AND END OF RAIL DETAILS

FOR TWO BAR METAL RAILS

PLANS PREPARED BY:
SIMPSON ENGINEERS & ASSOCIATES
5640 Dillard Drive
Suite 200
Cary, NC 27518
(919) 852-0468
(919) 852-0598 (Fax)
www.simpsonengr.com
LICENSURE NO. C-2521

NORTH CAROLINA PROFESSIONAL SEAL 11268 ENGINEER BETSY S. COX
4/10/2018

DOCUMENT NOT CONSIDERED FINAL UNLESS ALL SIGNATURES COMPLETED

REVISIONS						
NO.	BY:	DATE:	NO.	BY:	DATE:	
1			3			
2			4			

SHEET NO. S-13
TOTAL SHEETS 27

DRAWN BY:	S.D. COOPER	DATE:	4-18
CHECKED BY:	B.S. COX	DATE:	4-18
DESIGN ENGINEER OF RECORD:	B.S. COX	DATE:	4-18

DocuSign Envelope ID: 6DEB83C1-BD30-4262-8F7C-6FB53D85B375

4/10/2018 8:59:54 AM G:\Projects\2016\Division 7 TIP (Matt Macdonald)\B-4958 Guilford 106 (105 24CSU 2BMR)\Structures\Drawings\Final\401_B4958_SMU_SUPER.dgn

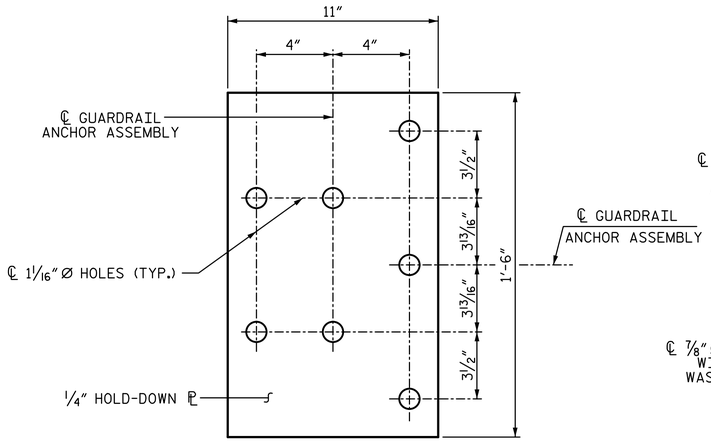

PLAN

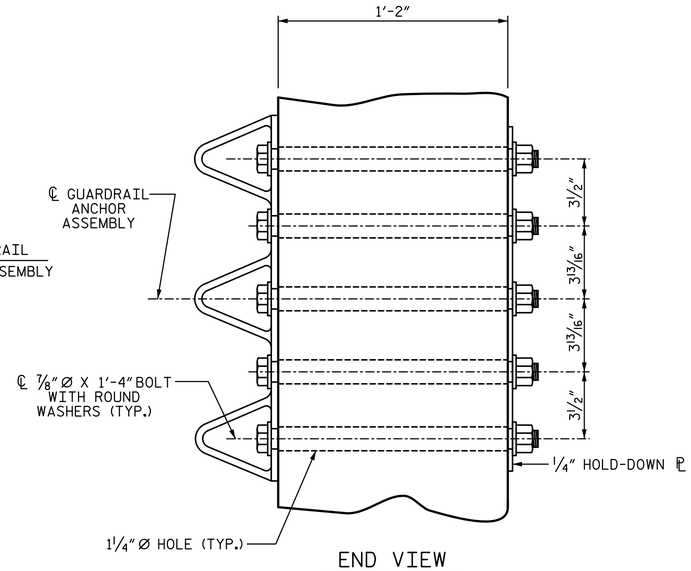

END VIEW

GUARDRAIL ANCHOR ASSEMBLY DETAILS

NOTES:

THE GUARDRAIL ANCHOR ASSEMBLY SHALL CONSIST OF A 1/4" HOLD DOWN PLATE AND 7 - 7/8" Ø BOLTS WITH NUTS AND WASHERS.

THE HOLD-DOWN PLATE SHALL CONFORM TO AASHTO M270 GRADE 36. AFTER FABRICATION, THE HOLD-DOWN PLATE SHALL BE HOT-DIP GALVANIZED IN ACCORDANCE WITH AASHTO M111.

BOLTS SHALL CONFORM TO THE REQUIREMENTS OF ASTM A307 AND NUTS SHALL CONFORM TO THE REQUIREMENTS OF AASHTO M291. BOLTS, NUTS AND WASHERS SHALL BE GALVANIZED. AT THE CONTRACTOR'S OPTION, STAINLESS STEEL BOLTS, NUTS AND WASHERS MAY BE USED AS AN ALTERNATE FOR THE 7/8" Ø GALVANIZED BOLTS, NUTS AND WASHERS. THEY SHALL CONFORM TO OR EXCEED THE MECHANICAL REQUIREMENTS OF ASTM A307. THE USE OF THIS ALTERNATE SHALL BE APPROVED BY THE ENGINEER.

THE GUARDRAIL ANCHOR ASSEMBLY IS REQUIRED AT ALL POINTS WHERE APPROACH GUARDRAIL IS TO BE ATTACHED TO THE END OF THE PARAPET. FOR POINTS OF ATTACHMENT, SEE SKETCH.

AFTER INSTALLATION, THE EXPOSED THREAD OF THE BOLT SHALL BE BURRED WITH A SHARP POINTED TOOL.

THE COST OF THE GUARDRAIL ANCHOR ASSEMBLIES WITH BOLTS, NUTS AND WASHERS COMPLETE IN PLACE, SHALL BE INCLUDED IN THE VARIOUS PAY ITEMS.

THE VERTICAL REINFORCING BARS MAY BE SHIFTED SLIGHTLY IN THE END POST TO CLEAR ASSEMBLY BOLTS.

THE 1 1/4" Ø HOLES SHALL BE FORMED OR DRILLED WITH A CORE BIT. IMPACT TOOLS WILL NOT BE PERMITTED. ANY CONCRETE DAMAGED BY THIS WORK SHALL BE REPAIRED TO THE SATISFACTION OF THE ENGINEER.

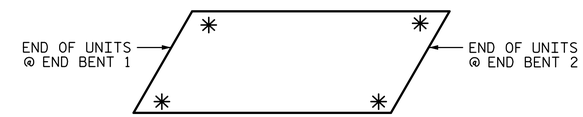

SKETCH SHOWING POINTS OF ATTACHMENT

✳ LOCATION OF GUARDRAIL ATTACHMENT

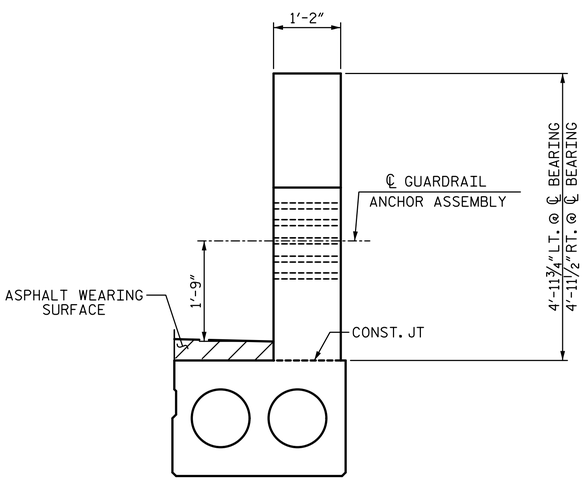

END VIEW

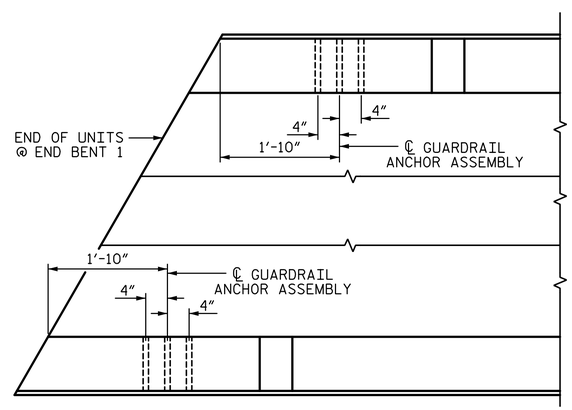

PLAN

(END BENT 1 SHOWN, END BENT 2 SIMILAR)

LOCATION OF GUARDRAIL ANCHOR AT END POST

PROJECT NO. B-4958

GUILFORD COUNTY

STATION: 16+54.00 -L-

STATE OF NORTH CAROLINA
DEPARTMENT OF TRANSPORTATION
RALEIGH

SUPERSTRUCTURE

GUARDRAIL ANCHORAGE DETAILS FOR METAL RAILS

PLANS PREPARED BY:

SIMPSON ENGINEERS & ASSOCIATES
5640 Dillard Drive
Suite 200
Cary, NC 27518
(919) 852-0468
(919) 852-0598 (Fax)
www.simpsonengr.com
LICENSURE NO. C-2521

NORTH CAROLINA PROFESSIONAL SEAL 11268 ENGINEER BETSY S. COX
4/10/2018

DOCUMENT NOT CONSIDERED FINAL UNLESS ALL SIGNATURES COMPLETED

DRAWN BY:	S.D. COOPER	DATE:	4-18
CHECKED BY:	B.S. COX	DATE:	4-18
DESIGN ENGINEER OF RECORD:	B.S. COX	DATE:	4-18

REVISIONS						SHEET NO.
NO.	BY:	DATE:	NO.	BY:	DATE:	S-14
1			3			TOTAL SHEETS
2			4			27

DocuSign Envelope ID: 6DEB83C1-BD30-4262-8F7C-6FB53D85B375

4/10/2018 8:59:54 AM G:\Projects\2016\Division 7 TIP (Mott Macdonald)\B-4958 Guilford 106 (105 24CSU 2BMR)\Structures\Drawings\Final\401_B4958_SMU_EB.dgn

NOTES:

STIRRUPS IN CAP MAY BE SHIFTED AS NECESSARY TO CLEAR DOWELS.

THE CONCRETE IN THE SHADED AREA OF THE WING SHALL BE POURED AFTER THE CONCRETE PARAPET IS CAST IF SLIP FORMING IS USED.

FOR PILE SPLICE DETAILS, SEE SHEET 4 OF 4.

FOR WING DETAILS, SEE SHEET 3 OF 4.

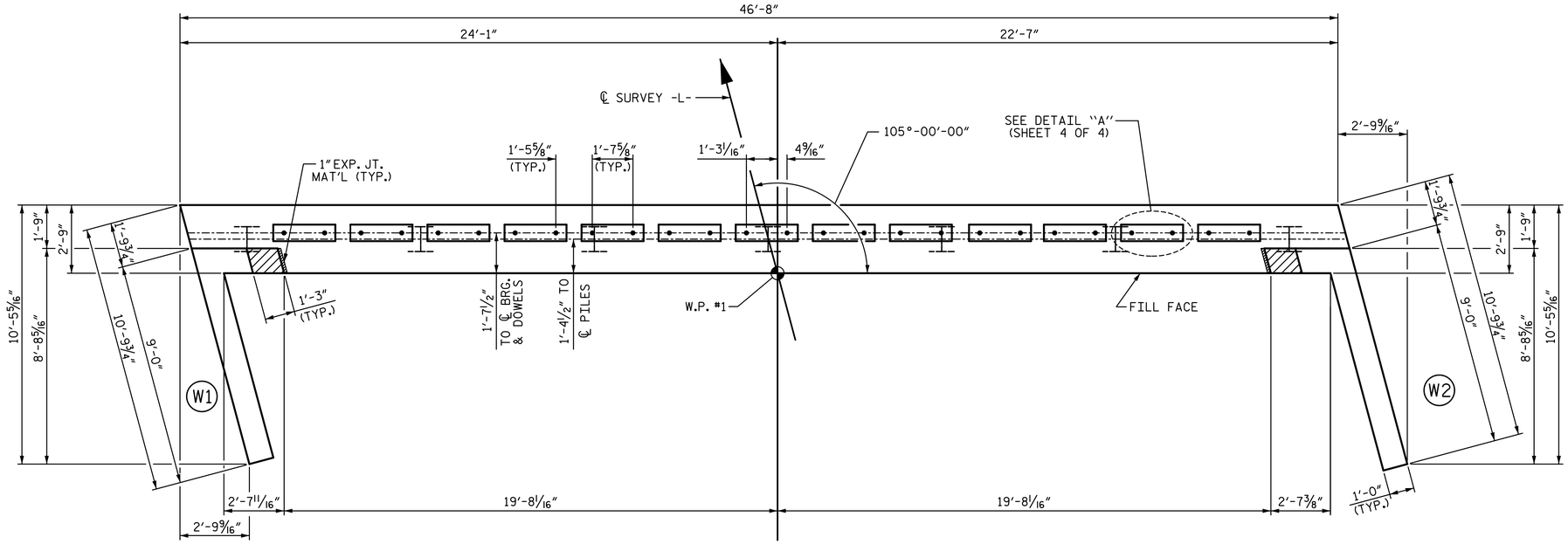

PLAN

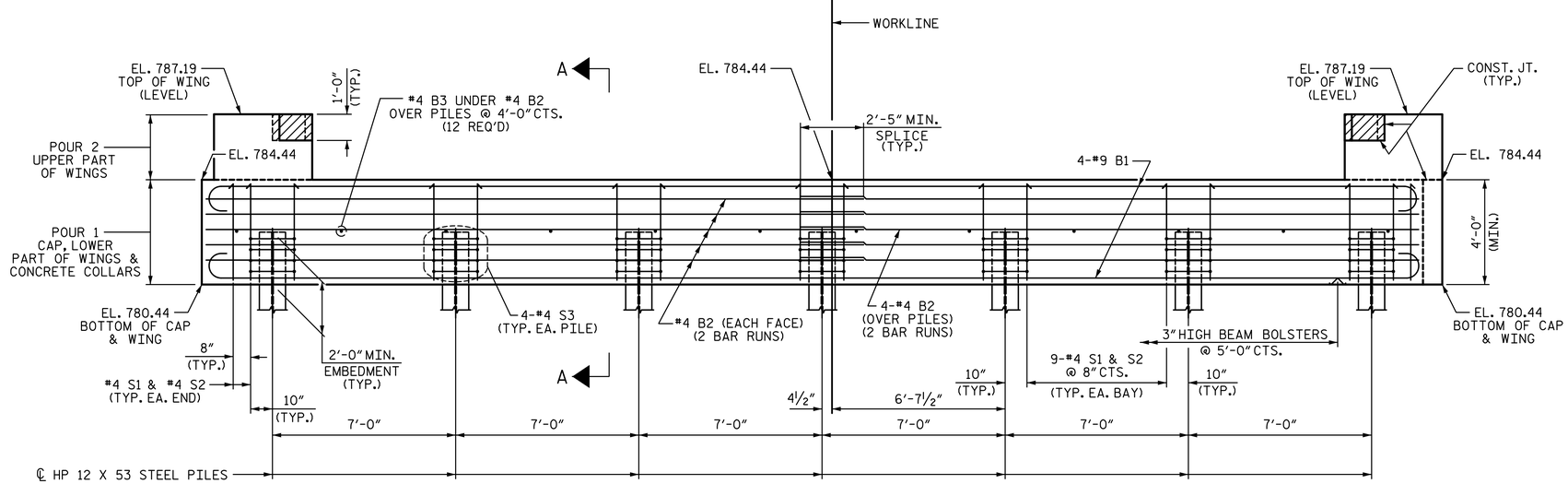

ELEVATION

WINGS NOT SHOWN FOR CLARITY.
FOR SECTION A-A, SEE SHEET 4 OF 4.
CONCRETE COLLARS FOR STEEL PILES NOT SHOWN IN PLAN AND ELEVATION VIEWS FOR CLARITY.
SEE "CORROSION PROTECTION FOR STEEL PILES DETAIL", SHEET 4 OF 4.

PROJECT NO. B-4958
GUILFORD COUNTY
STATION: 16+54.00 -L-

SHEET 1 OF 4

STATE OF NORTH CAROLINA
DEPARTMENT OF TRANSPORTATION
RALEIGH

SUBSTRUCTURE

END BENT 1

PLANS PREPARED BY:
SIMPSON ENGINEERS & ASSOCIATES
5640 Dillard Drive
Suite 200
Cary, NC 27518
(919) 852-0468
(919) 852-0598 (Fax)
www.simpsonengr.com
LICENSURE NO. C-2521

NORTH CAROLINA PROFESSIONAL SEAL 11268 ENGINEER BETSY S. COX
4/10/2018

DOCUMENT NOT CONSIDERED FINAL UNLESS ALL SIGNATURES COMPLETED

DRAWN BY:	S.D. COOPER	DATE:	4-18
CHECKED BY:	B.S. COX	DATE:	4-18
DESIGN ENGINEER OF RECORD:	B.S. COX	DATE:	4-18

REVISIONS

NO.	BY:	DATE:	NO.	BY:	DATE:
1			3		
2			4		

SHEET NO. S-15
TOTAL SHEETS 27

DocuSign Envelope ID: 6DEB83C1-BD30-4262-8F7C-6FB53D85B375

4/10/2018 8:59:54 AM G:\Projects\2016\Division 7 TIP (Mott Macdonald)\B-4958 Guilford 106 (105 24CSU 2BMR)\Structures\Drawings\Final\401_B4958_SMU_EB.dgn

NOTES:

STIRRUPS IN CAP MAY BE SHIFTED AS NECESSARY TO CLEAR DOWELS.

THE CONCRETE IN THE SHADED AREA OF THE WING SHALL BE POURED AFTER THE CONCRETE PARAPET IS CAST IF SLIP FORMING IS USED.

FOR PILE SPLICE DETAILS, SEE SHEET 4 OF 4.

FOR WING DETAILS, SEE SHEET 3 OF 4.

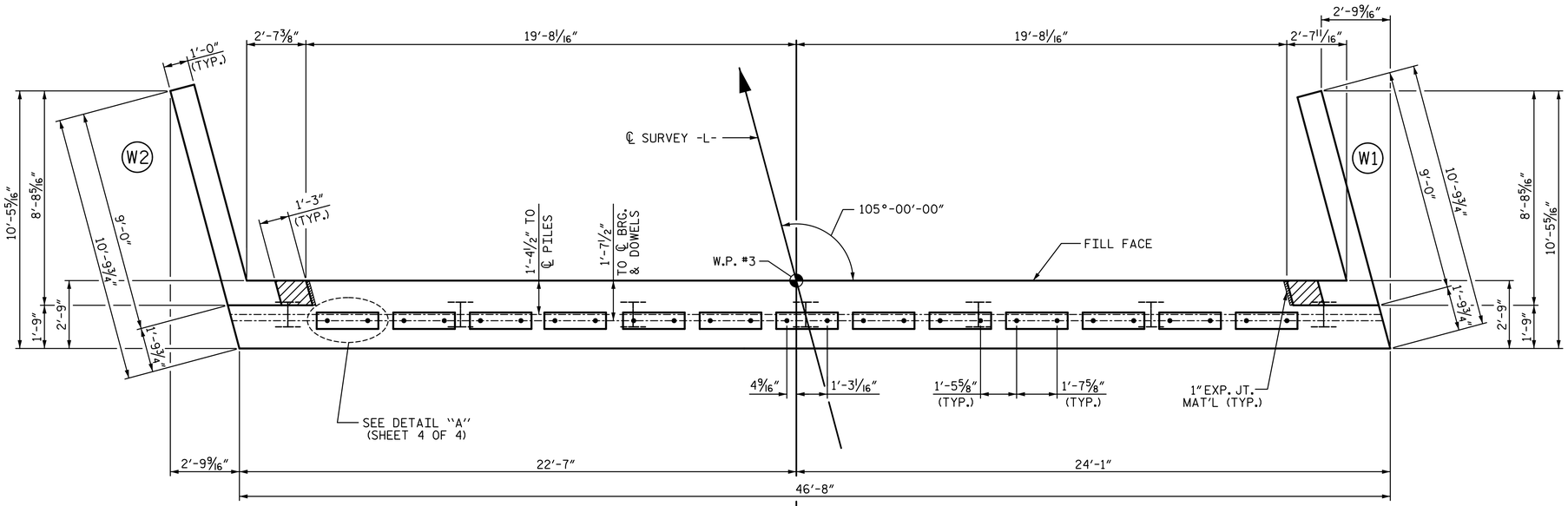

PLAN

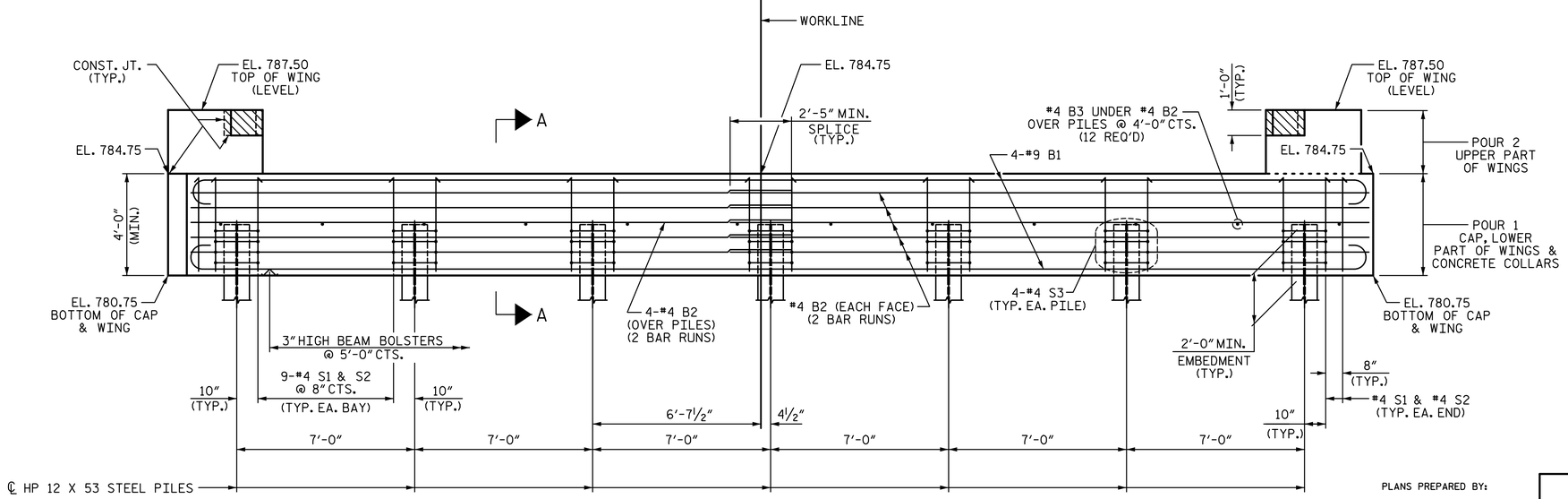

ELEVATION

WINGS NOT SHOWN FOR CLARITY.
FOR SECTION A-A, SEE SHEET 4 OF 4.
CONCRETE COLLARS FOR STEEL PILES NOT SHOWN IN PLAN AND ELEVATION VIEWS FOR CLARITY.
SEE "CORROSION PROTECTION FOR STEEL PILES DETAIL", SHEET 4 OF 4.

PROJECT NO. B-4958
GUILFORD COUNTY
STATION: 16+54.00 -L-

SHEET 2 OF 4

STATE OF NORTH CAROLINA
DEPARTMENT OF TRANSPORTATION
RALEIGH

SUBSTRUCTURE

END BENT 2

PLANS PREPARED BY:
SIMPSON ENGINEERS & ASSOCIATES
5640 Dillard Drive
Suite 200
Cary, NC 27518
(919) 852-0468
(919) 852-0598 (Fax)
www.simpsonengr.com
LICENSURE NO. C-2521

NORTH CAROLINA PROFESSIONAL SEAL 11268 ENGINEER BETSY S. COX
4/10/2018

DOCUMENT NOT CONSIDERED FINAL UNLESS ALL SIGNATURES COMPLETED

DRAWN BY:	S.D. COOPER	DATE:	4-18
CHECKED BY:	B.S. COX	DATE:	4-18
DESIGN ENGINEER OF RECORD:	B.S. COX	DATE:	4-18

REVISIONS						SHEET NO.
NO.	BY:	DATE:	NO.	BY:	DATE:	S-16
1			3			TOTAL SHEETS
2			4			27

DocuSign Envelope ID: 6DEB83C1-BD30-4262-8F7C-6FB53D85B375

4/10/2018 8:59:54 AM G:\Projects\2016\Division 7 TIP (Mott Macdonald)\B-4958 Guilford 106 (105 24CSU 2BMR)\Structures\Drawings\Final\401_B4958_SMU_EB.dgn

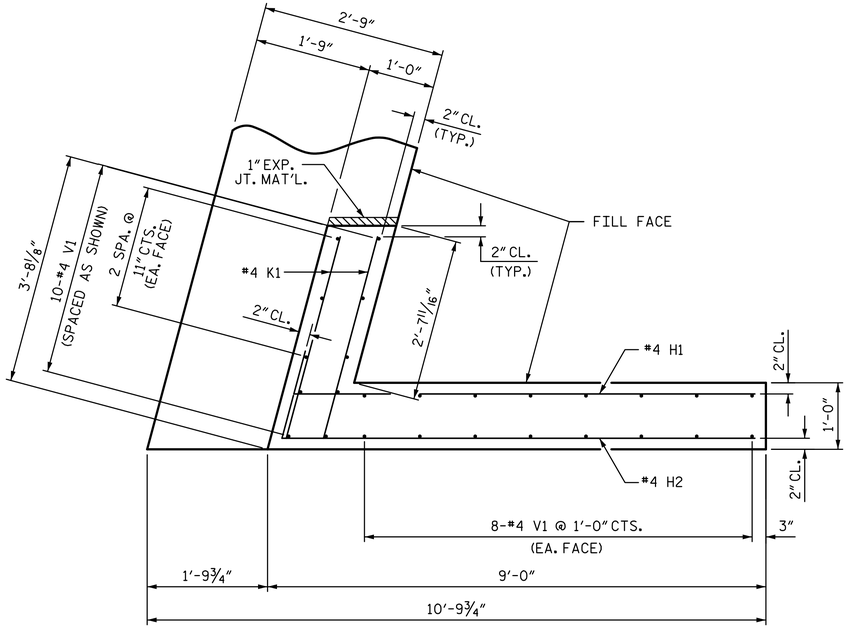

PLAN OF WING (W1)

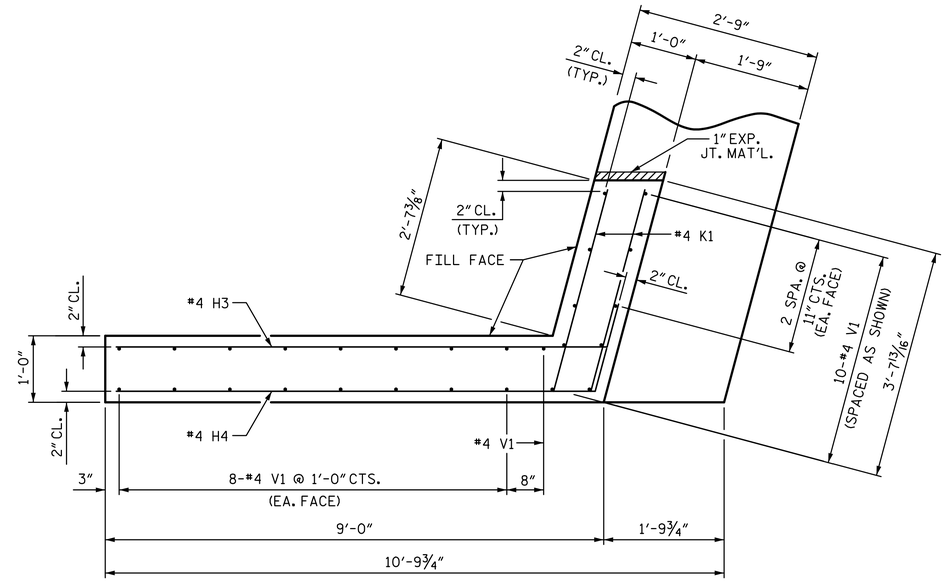

PLAN OF WING (W2)

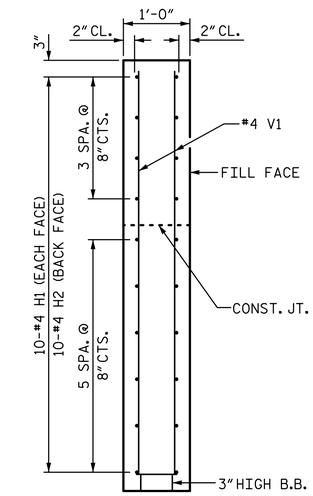

SECTION X-X

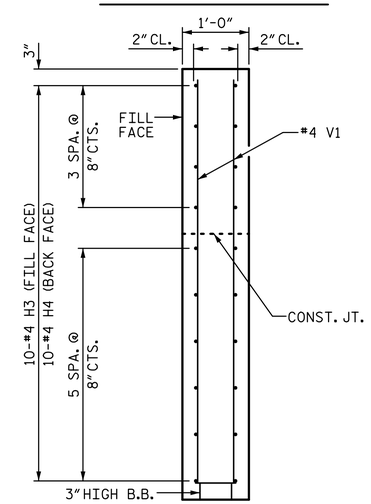

SECTION Y-Y

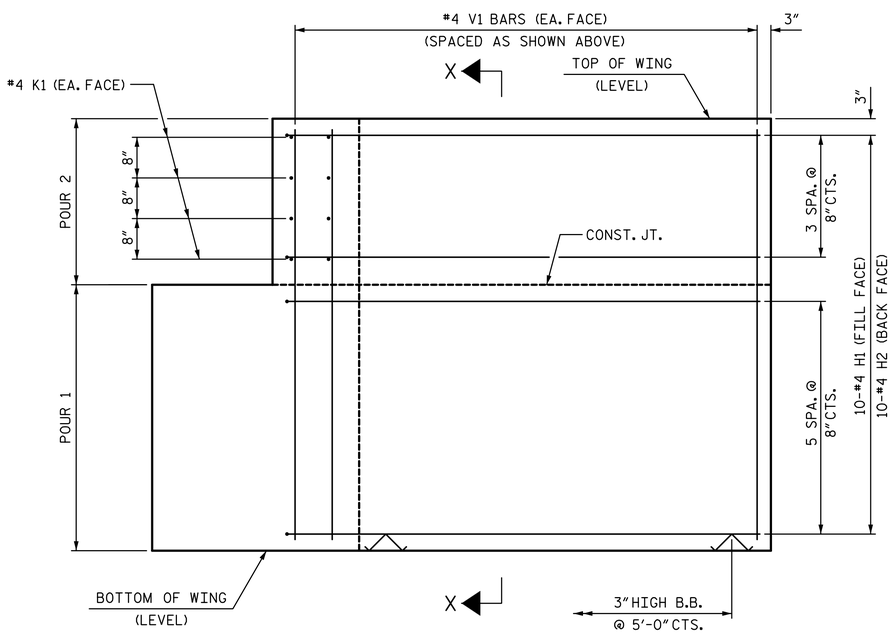

ELEVATION OF WING (W1)

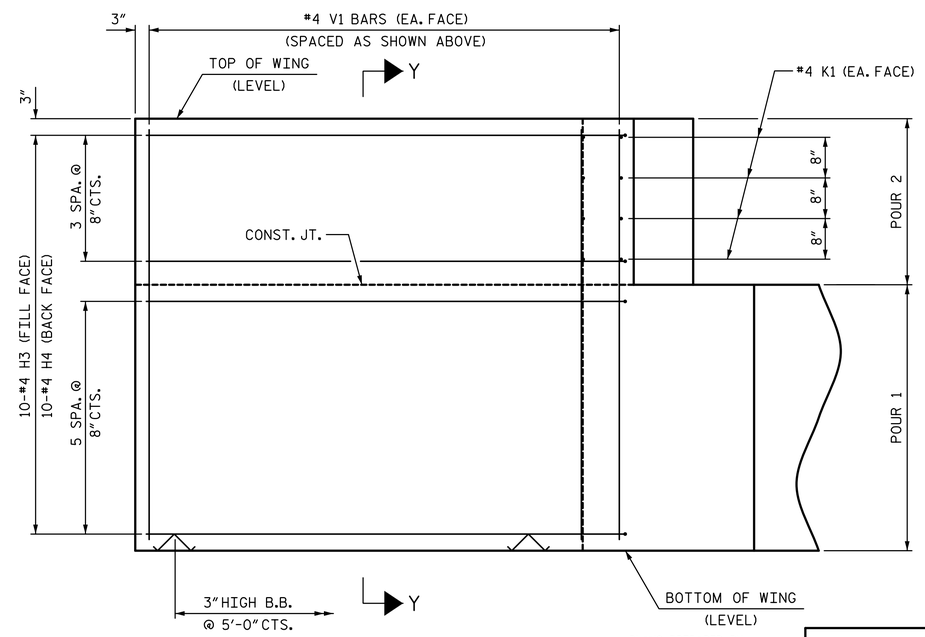

ELEVATION OF WING (W2)

WING DETIALS

PROJECT NO. B-4958
GUILFORD COUNTY
STATION: 16+54.00 -L-

SHEET 3 OF 4

STATE OF NORTH CAROLINA
DEPARTMENT OF TRANSPORTATION
RALEIGH
SUBSTRUCTURE

END BENT
WING DETAILS

PLANS PREPARED BY:

SIMPSON ENGINEERS & ASSOCIATES
5640 Dillard Drive
Suite 200
Cary, NC 27518
(919) 852-0468
(919) 852-0598 (Fax)
www.simpsonengr.com
LICENSURE NO. C-2521

NORTH CAROLINA PROFESSIONAL SEAL 11268 ENGINEER BETSY S. COX
4/10/2018

DOCUMENT NOT CONSIDERED FINAL UNLESS ALL SIGNATURES COMPLETED

DRAWN BY: S.D. COOPER	DATE: 4-18				
CHECKED BY: B.S. COX	DATE: 4-18				
DESIGN ENGINEER OF RECORD: B.S. COX	DATE: 4-18				

REVISIONS						SHEET NO.
NO.	BY:	DATE:	NO.	BY:	DATE:	S-17
1			3			TOTAL SHEETS
2			4			27

DocuSign Envelope ID: 6DEB83C1-BD30-4262-8F7C-6FB53D85B375

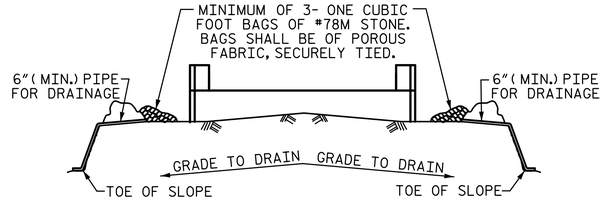

BAGGED STONE AND PIPE SHALL BE PLACED IMMEDIATELY AFTER COMPLETION OF END BENT EXCAVATION. PIPE MAY BE EITHER CONCRETE, CORRUGATED STEEL, CORRUGATED ALUMINUM ALLOY, OR CORRUGATED PLASTIC. PERFORATED PIPE WILL NOT BE ALLOWED.

BAGGED STONE SHALL REMAIN IN PLACE UNTIL THE ENGINEER DIRECTS THAT IT BE REMOVED. THE CONTRACTOR SHALL REMOVE AND DISPOSE OF SILT ACCUMULATIONS AT BAGGED STONE WHEN SO DIRECTED BY THE ENGINEER. BAGS SHALL BE REMOVED AND REPLACED WHENEVER THE ENGINEER DETERMINES THAT THEY HAVE DETERIORATED AND LOST THEIR EFFECTIVENESS.

NO SEPARATE PAYMENT WILL BE MADE FOR THIS WORK AND THE ENTIRE COST OF THIS WORK SHALL BE INCLUDED IN THE UNIT CONTRACT PRICE BID FOR THE SEVERAL PAY ITEMS.

TEMPORARY DRAINAGE AT END BENT

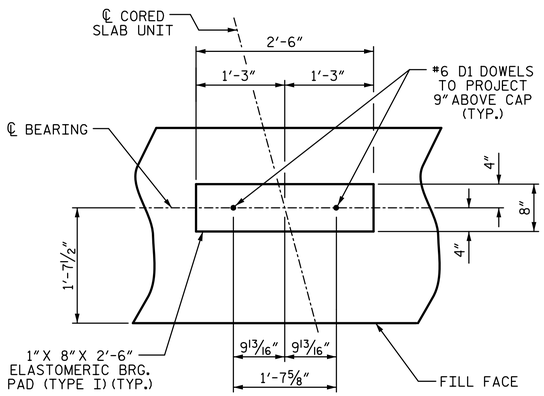

DETAIL "A"

(END BENT 1 SHOWN, END BENT 2 SIMILAR BY ROTATION)

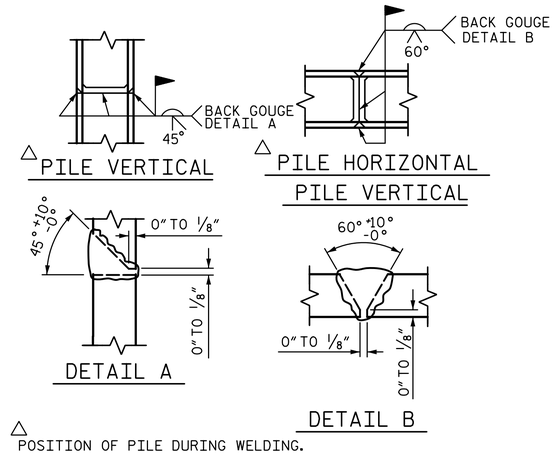

△ POSITION OF PILE DURING WELDING.

PILE SPLICE DETAILS

BAR TYPES

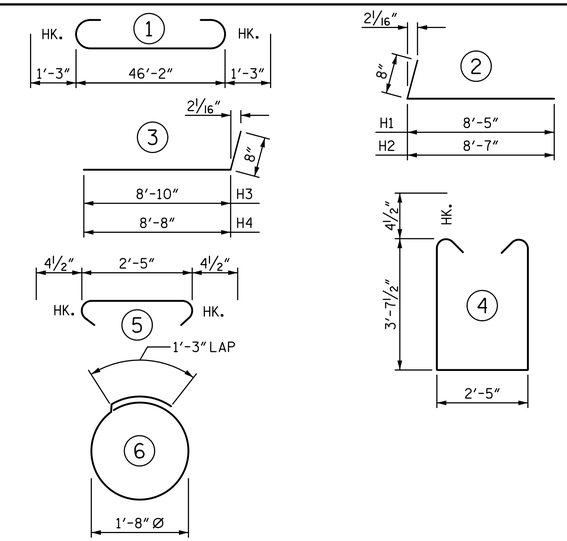

ALL BAR DIMENSIONS ARE OUT TO OUT.

END BENT 1	
HP 12 X 53 STEEL PILES	
NO: 7	LF = 210
PILE DRIVING EQUIPMENT SETUP FOR HP 12 X 53 STEEL PILES	EA: 7

END BENT 2	
HP 12 X 53 STEEL PILES	
NO: 7	LF = 70
STEEL PILE POINTS	NO: 7
PILE DRIVING EQUIPMENT SETUP FOR HP 12 X 53 STEEL PILES	EA: 7
PILE EXCAVATION IN SOIL	37 LF
PILE EXCAVATION NOT IN SOIL	33 LF

BILL OF MATERIAL
FOR ONE END BENT

BAR	NO.	SIZE	TYPE	LENGTH	WEIGHT
B1	8	#9	1	48'-8"	1324
B2	28	#4	STR	24'-5"	457
B3	12	#4	STR	2'-5"	19
D1	26	#6	STR	1'-6"	59
H1	10	#4	2	9'-1"	61
H2	10	#4	2	9'-3"	62
H3	10	#4	3	9'-6"	63
H4	10	#4	3	9'-4"	62
K1	16	#4	STR	3'-3"	35
S1	58	#4	4	10'-5"	404
S2	58	#4	5	3'-2"	123
S3	28	#4	6	6'-6"	122
V1	53	#4	STR	6'-2"	218
REINFORCING STEEL (FOR ONE END BENT)					3009 LB

CLASS A CONCRETE BREAKDOWN (FOR ONE END BENT)

POUR 1	CAP, LOWER PART OF WINGS & COLLARS	22.6 CY
POUR 2	UPPER PART OF WINGS	2.3 CY
TOTAL CLASS A CONCRETE		24.9 CY

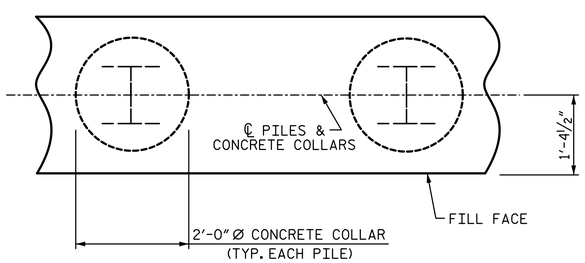

PLAN

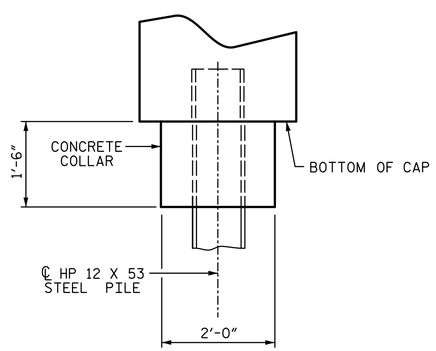

ELEVATION

CORROSION PROTECTION FOR STEEL PILES DETAIL

(END BENT 1 SHOWN, END BENT 2 SIMILAR BY ROTATION)

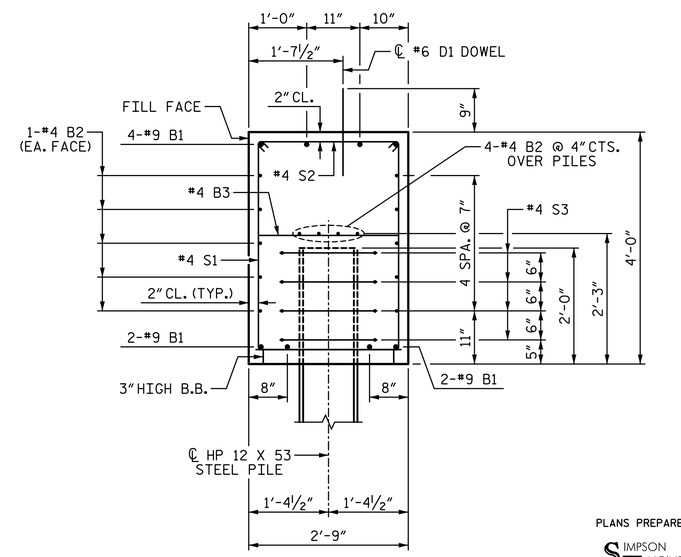

SECTION A-A

(CONCRETE COLLAR NOT SHOWN FOR CLARITY. SEE "CORROSION PROTECTION FOR STEEL PILES DETAIL.")

PROJECT NO. B-4958
GUILFORD COUNTY
STATION: 16+54.00 -L-

SHEET 4 OF 4

STATE OF NORTH CAROLINA
DEPARTMENT OF TRANSPORTATION
RALEIGH

SUBSTRUCTURE

END BENT 1 & 2 DETAILS

PLANS PREPARED BY:
SIMPSON ENGINEERS & ASSOCIATES
5640 Dillard Drive
Suite 200
Cary, NC 27518
(919) 852-0468
(919) 852-0598 (Fax)
www.simpsonengr.com
LICENSURE NO. C-2521

NORTH CAROLINA PROFESSIONAL SEAL 11268 ENGINEER BETSY S. COX
4/10/2018

DOCUMENT NOT CONSIDERED FINAL UNLESS ALL SIGNATURES COMPLETED

REVISIONS						
NO.	BY:	DATE:	NO.	BY:	DATE:	
1			3			
2			4			

SHEET NO. S-18
TOTAL SHEETS 27

DRAWN BY:	S.D. COOPER	DATE:	4-18
CHECKED BY:	B.S. COX	DATE:	4-18
DESIGN ENGINEER OF RECORD:	B.S. COX	DATE:	4-18

4/10/2018 8:59:54 AM G:\Projects\2016\Division 7 TIP (Mott Macdonald)\B-4958 Guilford 106 (105 24CSU 2BMR)\Structures\Drawings\Final\401_B4958_SMU_EB.dgn

DocuSign Envelope ID: 6DEB83C1-BD30-4262-8F7C-6FB53D85B375

4/10/2018 8:59:55 AM G:\Projects\2016\Division 7 TIP (Mott Macdonald)\B-4958 Guilford 106 (105 24CSU 2BMR)\Structures\Drawings\Final\401_B4958_SMU_EB - micropile.dgn

NOTES:

STIRRUPS IN CAP MAY BE SHIFTED AS NECESSARY TO CLEAR DOWELS.

THE CONCRETE IN THE SHADED AREA OF THE WING SHALL BE POURED AFTER THE CONCRETE PARAPET IS CAST IF SLIP FORMING IS USED.

FOR WING DETAILS, SEE SHEET 3 OF 4.

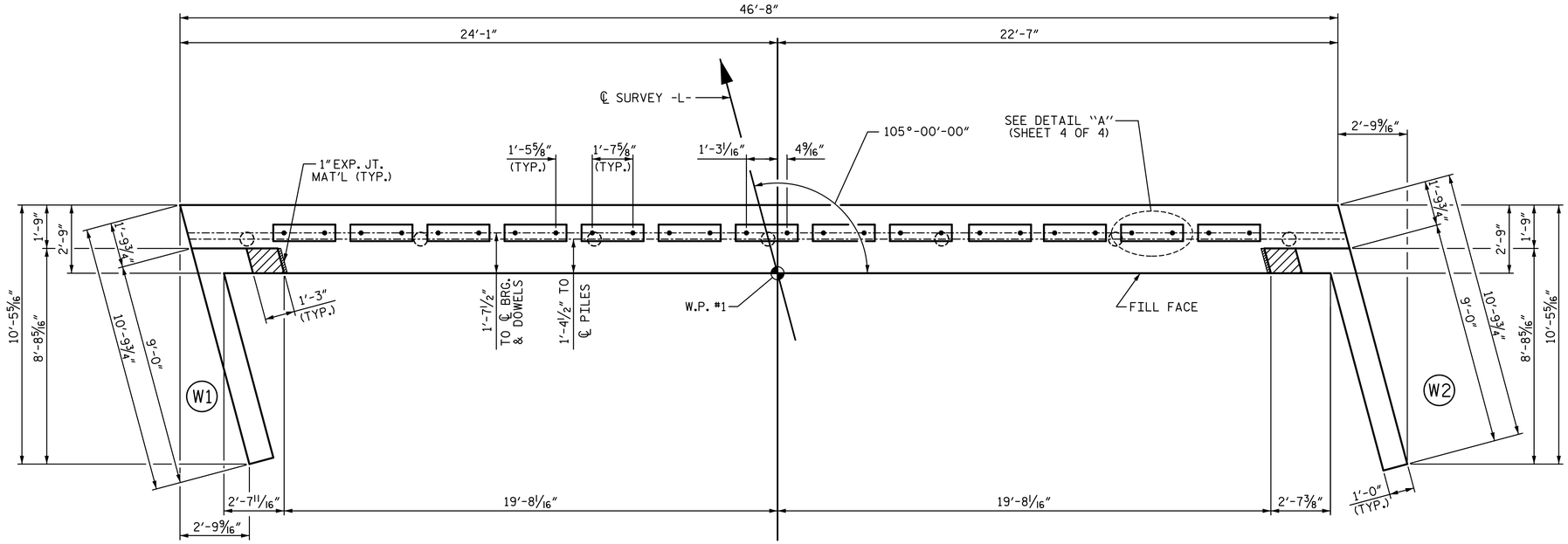

PLAN

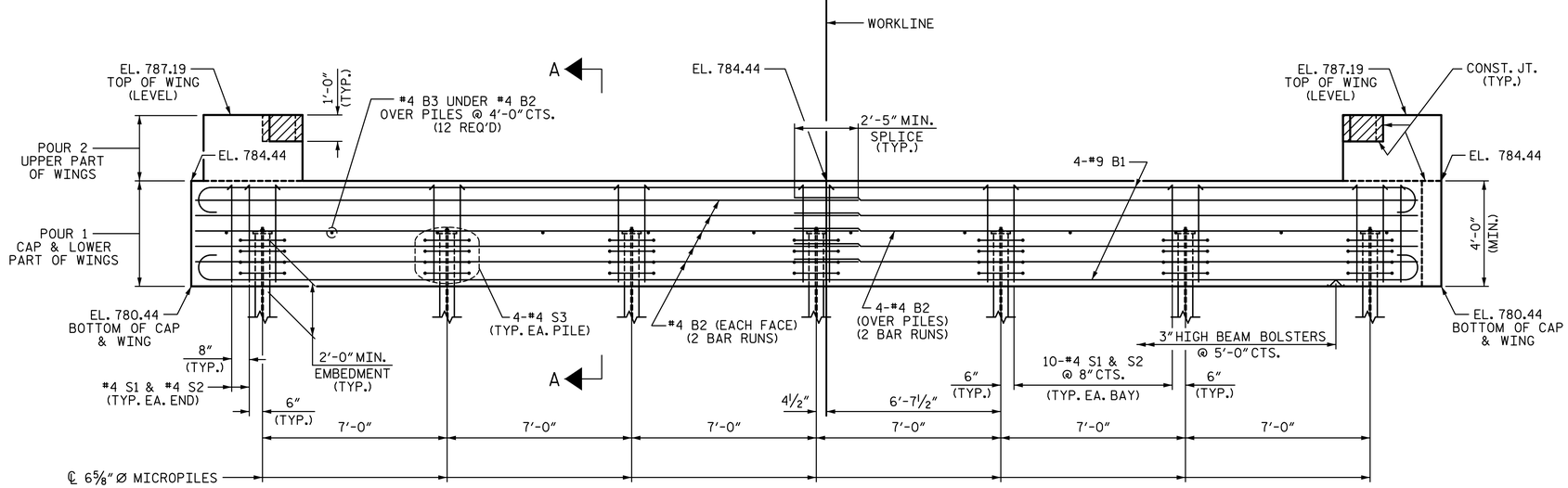

ELEVATION

WINGS NOT SHOWN FOR CLARITY.
FOR SECTION A-A, SEE SHEET 4 OF 4.

PROJECT NO. B-4958
GUILFORD COUNTY
STATION: 16+54.00 -L-

SHEET 1 OF 4

STATE OF NORTH CAROLINA
DEPARTMENT OF TRANSPORTATION
RALEIGH

SUBSTRUCTURE

END BENT 1 MICROPILE OPTION

PLANS PREPARED BY:
SIMPSON ENGINEERS & ASSOCIATES
5640 Dillard Drive
Suite 200
Cary, NC 27518
(919) 852-0468
(919) 852-0598 (Fax)
www.simpsonengr.com
LICENSURE NO. C-2521

NORTH CAROLINA PROFESSIONAL SEAL 11268 ENGINEER BETSY S. COX
4/10/2018

DOCUMENT NOT CONSIDERED FINAL UNLESS ALL SIGNATURES COMPLETED

DRAWN BY:	S.D. COOPER	DATE:	4-18
CHECKED BY:	B.S. COX	DATE:	4-18
DESIGN ENGINEER OF RECORD:	B.S. COX	DATE:	4-18

REVISIONS						SHEET NO.
NO.	BY:	DATE:	NO.	BY:	DATE:	S-19
1			3			TOTAL SHEETS
2			4			27

DocuSign Envelope ID: 6DEB83C1-BD30-4262-8F7C-6FB53D85B375

4/10/2018 8:59:55 AM G:\Projects\2016\Division 7 TIP (Mott Macdonald)\B-4958 Guilford 106 (105 24CSU 2BMR)\Structures\Drawings\Final\401_B4958_SMU_EB - micropile.dgn

NOTES:

STIRRUPS IN CAP MAY BE SHIFTED AS NECESSARY TO CLEAR DOWELS.

THE CONCRETE IN THE SHADED AREA OF THE WING SHALL BE POURED AFTER THE CONCRETE PARAPET IS CAST IF SLIP FORMING IS USED.

FOR WING DETAILS, SEE SHEET 3 OF 4.

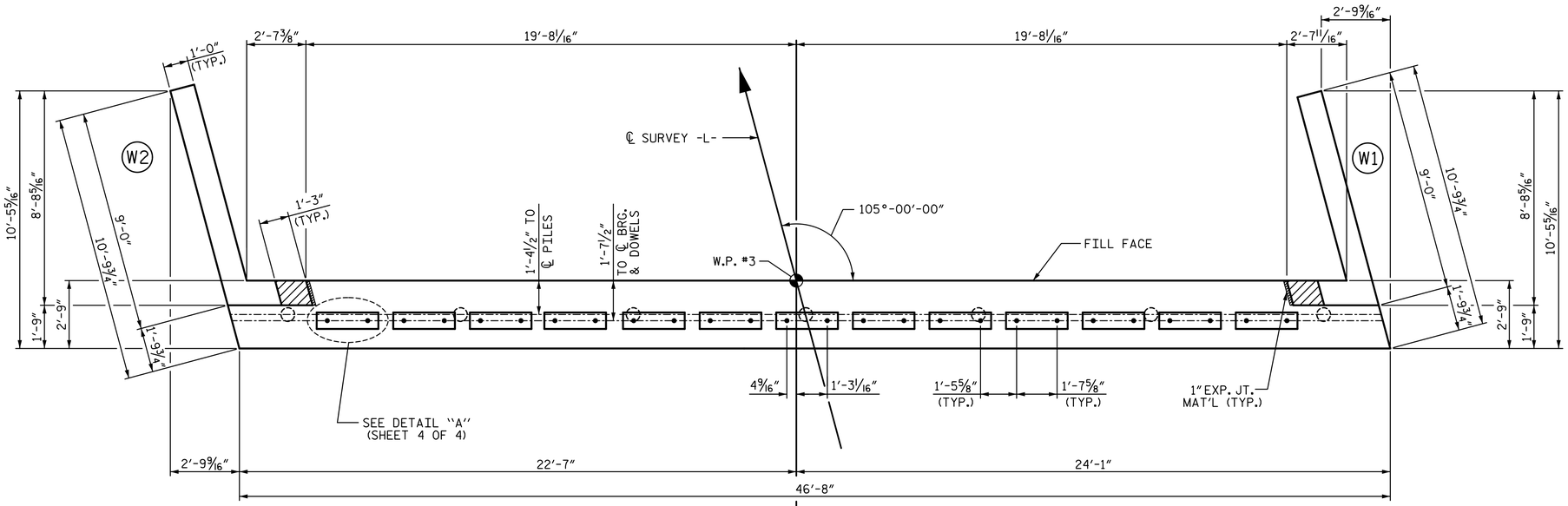

PLAN

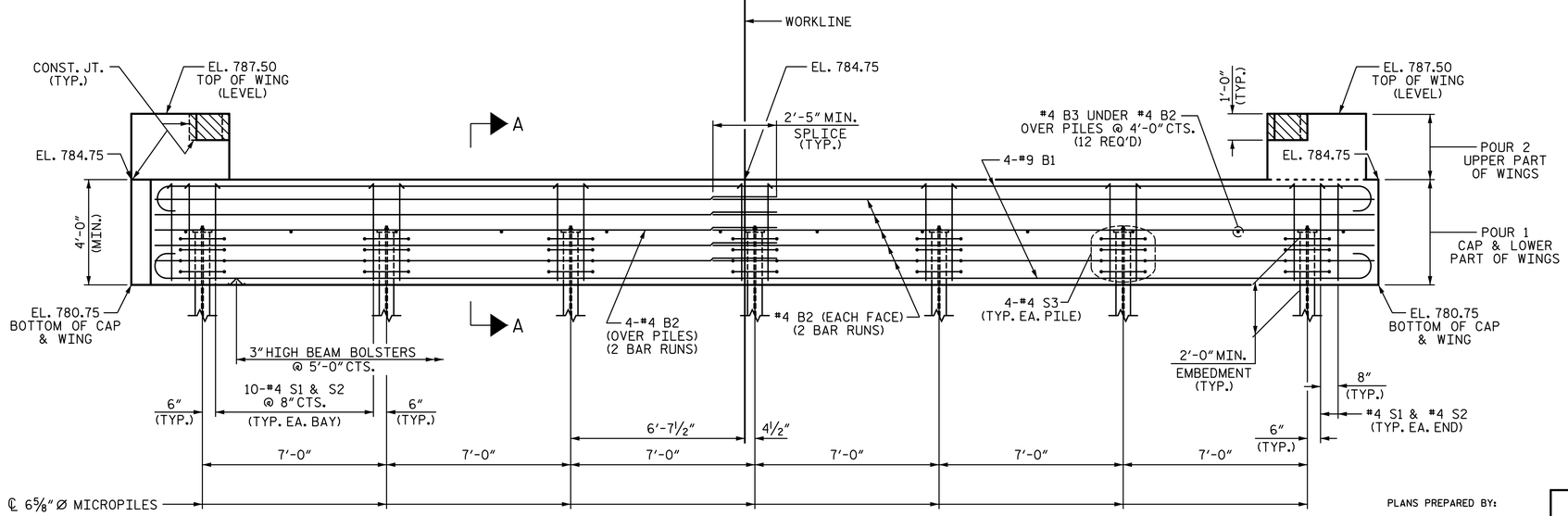

ELEVATION

WINGS NOT SHOWN FOR CLARITY.
FOR SECTION A-A, SEE SHEET 4 OF 4.

PROJECT NO. B-4958
GUILFORD COUNTY
STATION: 16+54.00 -L-

SHEET 2 OF 4

STATE OF NORTH CAROLINA
DEPARTMENT OF TRANSPORTATION
RALEIGH

SUBSTRUCTURE

END BENT 2 MICROPILE OPTION

PLANS PREPARED BY:

SIMPSON ENGINEERS & ASSOCIATES
5640 Dillard Drive
Suite 200
Cary, NC 27518
(919) 852-0468
(919) 852-0598 (Fax)
www.simpsonengr.com
LICENSURE NO. C-2521

NORTH CAROLINA PROFESSIONAL SEAL 11268 ENGINEER BETSY S. COX
4/10/2018

DOCUMENT NOT CONSIDERED FINAL UNLESS ALL SIGNATURES COMPLETED

DRAWN BY:	S.D. COOPER	DATE:	4-18
CHECKED BY:	B.S. COX	DATE:	4-18
DESIGN ENGINEER OF RECORD:	B.S. COX	DATE:	4-18

REVISIONS						SHEET NO.
NO.	BY:	DATE:	NO.	BY:	DATE:	S-20
1			3			TOTAL SHEETS
2			4			27

DocuSign Envelope ID: 6DEB83C1-BD30-4262-8F7C-6FB53D85B375

4/10/2018 8:59:55 AM G:\Projects\2016\Division 7 TIP (Mott Macdonald)\B-4958 Guilford 106 (105 24CSU 2BMR)\Structures\Drawings\Final\401_B4958_SMU_EB - micropile.dgn

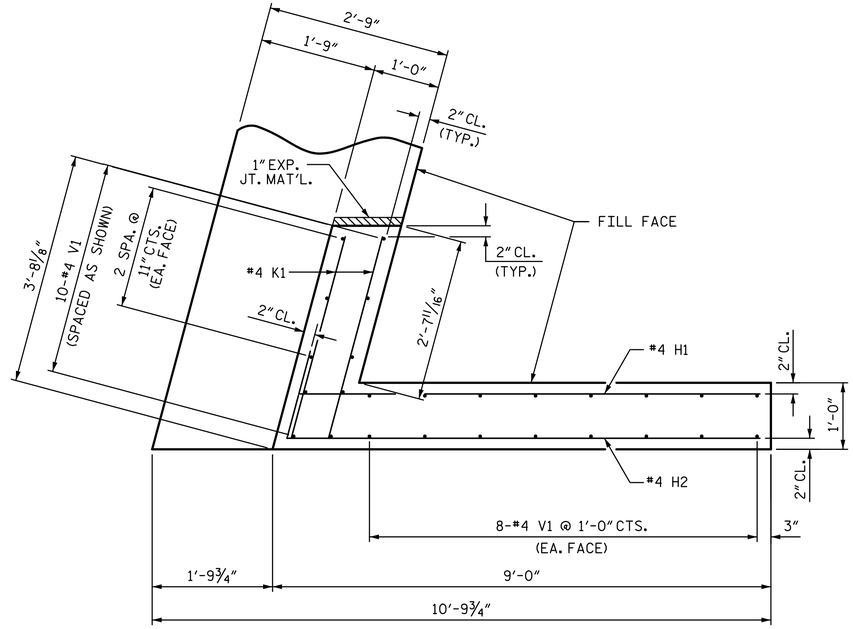

PLAN OF WING (W1)

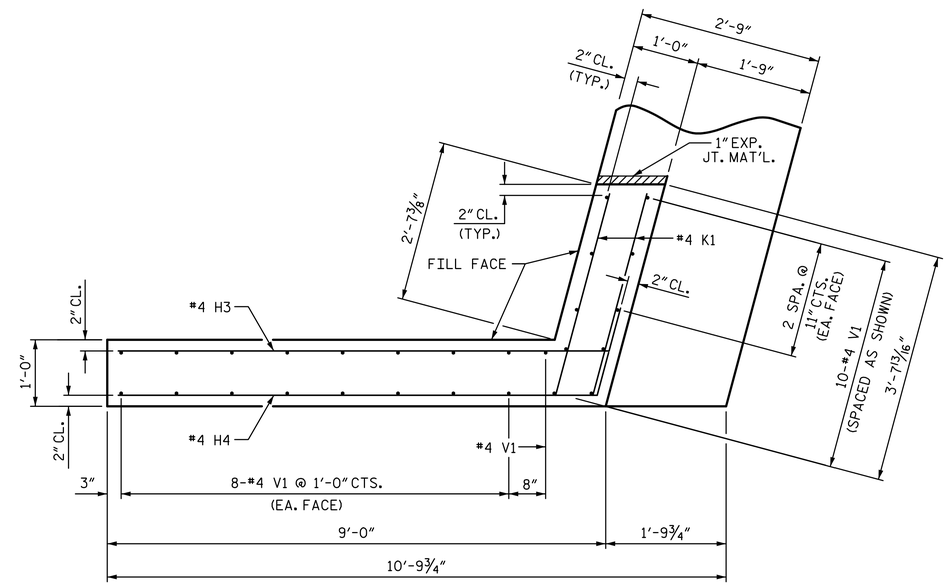

PLAN OF WING (W2)

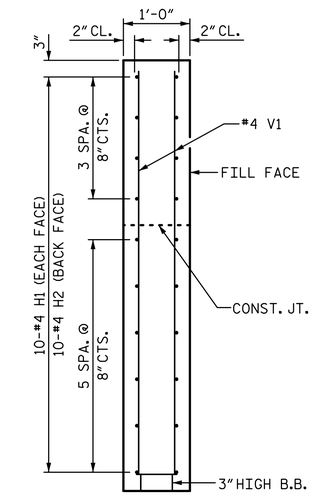

SECTION X-X

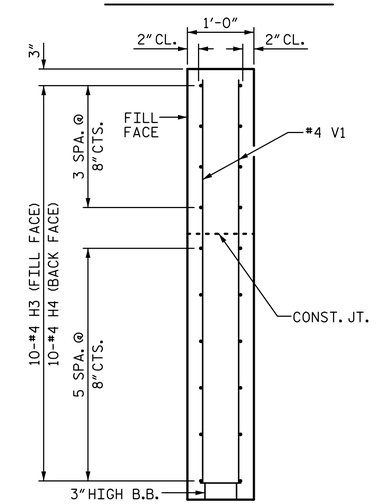

SECTION Y-Y

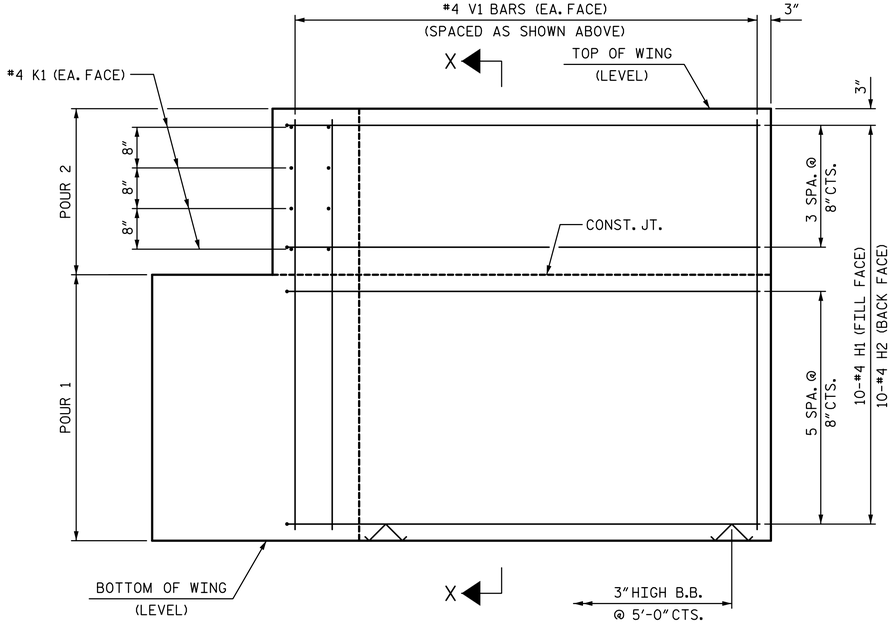

ELEVATION OF WING (W1)

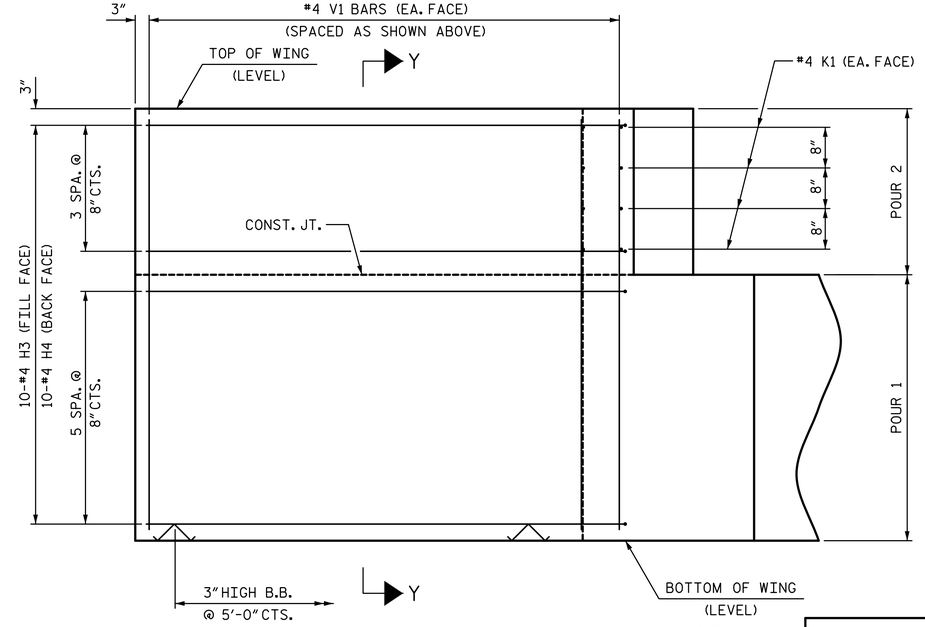

ELEVATION OF WING (W2)

WING DETIALS

PROJECT NO. B-4958
GUILFORD COUNTY
STATION: 16+54.00 -L-

SHEET 3 OF 4

STATE OF NORTH CAROLINA
DEPARTMENT OF TRANSPORTATION
RALEIGH
SUBSTRUCTURE
END BENT
WING DETAILS
MICROPILE OPTION

PLANS PREPARED BY:
SIMPSON ENGINEERS & ASSOCIATES
5640 Dillard Drive
Suite 200
Cary, NC 27518
(919) 852-0468
(919) 852-0598 (Fax)
www.simpsonengr.com
LICENSURE NO. C-2521

NORTH CAROLINA PROFESSIONAL SEAL 11268 ENGINEER BETSY S. COX
4/10/2018

DOCUMENT NOT CONSIDERED FINAL UNLESS ALL SIGNATURES COMPLETED

DRAWN BY: S.D. COOPER	DATE: 4-18				
CHECKED BY: B.S. COX	DATE: 4-18				
DESIGN ENGINEER OF RECORD: B.S. COX	DATE: 4-18				

REVISIONS						SHEET NO.
NO.	BY:	DATE:	NO.	BY:	DATE:	S-21
1			3			TOTAL SHEETS
2			4			27

DocuSign Envelope ID: 6DEB83C1-BD30-4262-8F7C-6FB53D85B375

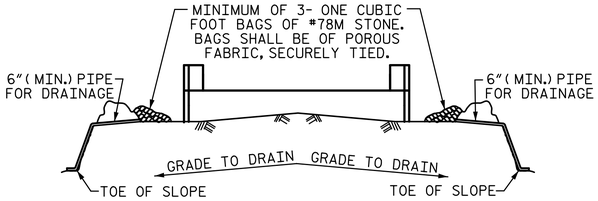

BAGGED STONE AND PIPE SHALL BE PLACED IMMEDIATELY AFTER COMPLETION OF END BENT EXCAVATION. PIPE MAY BE EITHER CONCRETE, CORRUGATED STEEL, CORRUGATED ALUMINUM ALLOY, OR CORRUGATED PLASTIC. PERFORATED PIPE WILL NOT BE ALLOWED.

BAGGED STONE SHALL REMAIN IN PLACE UNTIL THE ENGINEER DIRECTS THAT IT BE REMOVED. THE CONTRACTOR SHALL REMOVE AND DISPOSE OF SILT ACCUMULATIONS AT BAGGED STONE WHEN SO DIRECTED BY THE ENGINEER. BAGS SHALL BE REMOVED AND REPLACED WHENEVER THE ENGINEER DETERMINES THAT THEY HAVE DETERIORATED AND LOST THEIR EFFECTIVENESS.

NO SEPARATE PAYMENT WILL BE MADE FOR THIS WORK AND THE ENTIRE COST OF THIS WORK SHALL BE INCLUDED IN THE UNIT CONTRACT PRICE BID FOR THE SEVERAL PAY ITEMS.

TEMPORARY DRAINAGE AT END BENT

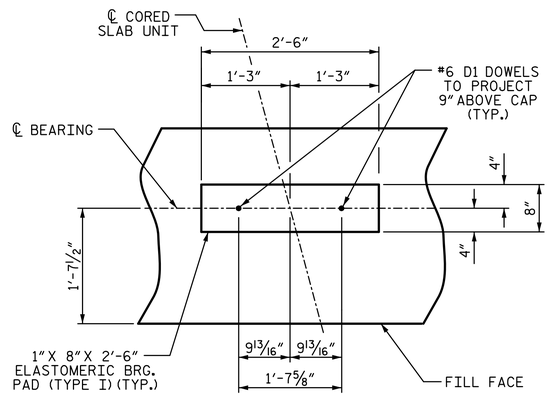

DETAIL "A"

(END BENT 1 SHOWN, END BENT 2 SIMILAR BY ROTATION)

BAR TYPES

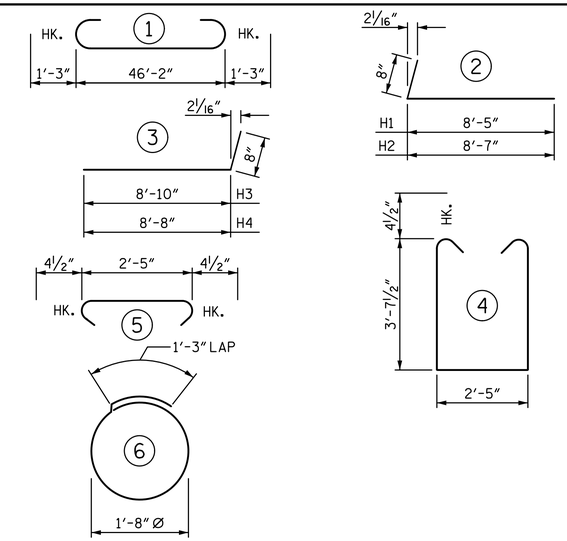

ALL BAR DIMENSIONS ARE OUT TO OUT.

END BENT 1		END BENT 2	
6⅝" Ø MICROPILES	EA: 7	6⅝" Ø MICROPILES	EA: 7

BILL OF MATERIAL

FOR ONE END BENT WITH MICROPILES

BAR	NO.	SIZE	TYPE	LENGTH	WEIGHT
B1	8	#9	1	48'-8"	1324
B2	28	#4	STR	24'-5"	457
B3	12	#4	STR	2'-5"	19
D1	26	#6	STR	1'-6"	59
H1	10	#4	2	9'-1"	61
H2	10	#4	2	9'-3"	62
H3	10	#4	3	9'-6"	63
H4	10	#4	3	9'-4"	62
K1	16	#4	STR	3'-3"	35
S1	64	#4	4	10'-5"	445
S2	64	#4	5	3'-2"	135
S3	28	#4	6	6'-6"	122
V1	53	#4	STR	6'-2"	218

REINFORCING STEEL (FOR ONE END BENT) 3062 LB

CLASS A CONCRETE BREAKDOWN (FOR ONE END BENT)

POUR 1 CAP & LOWER PART OF WINGS 21.4 CY

POUR 2 UPPER PART OF WINGS 2.3 CY

TOTAL CLASS A CONCRETE 23.7 CY

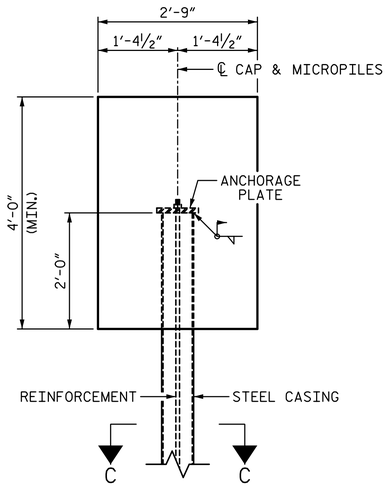

MICROPILE DETAIL

(TYP. EACH MICROPILE)

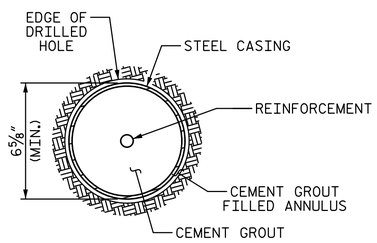

SECTION C-C

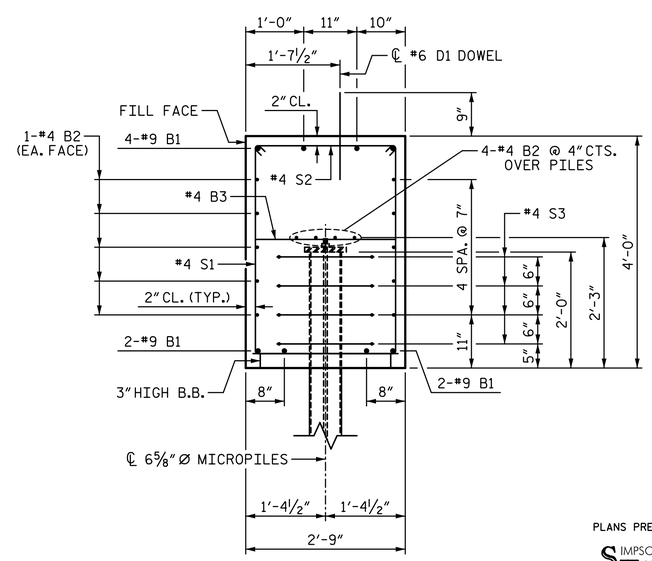

SECTION A-A

PROJECT NO. B-4958

GUILFORD COUNTY

STATION: 16+54.00 -L-

SHEET 4 OF 4

STATE OF NORTH CAROLINA
DEPARTMENT OF TRANSPORTATION
RALEIGH

SUBSTRUCTURE

END BENT 1 & 2 DETAILS MICROPILE OPTION

PLANS PREPARED BY:

SIMPSON ENGINEERS & ASSOCIATES
5640 Dillard Drive
Suite 200
Cary, NC 27518
(919) 852-0468
(919) 852-0598 (Fax)
www.simpsonengr.com
LICENSURE NO. C-2521

NORTH CAROLINA PROFESSIONAL SEAL 11268 ENGINEER BETSY S. COX
4/10/2018

DOCUMENT NOT CONSIDERED FINAL UNLESS ALL SIGNATURES COMPLETED

REVISIONS						SHEET NO.
NO.	BY:	DATE:	NO.	BY:	DATE:	S-22
1			3			TOTAL SHEETS
2			4			27

DRAWN BY: S.D. COOPER DATE: 4-18
CHECKED BY: B.S. COX DATE: 4-18
DESIGN ENGINEER OF RECORD: B.S. COX DATE: 4-18

4/10/2018 8:59:55 AM G:\Projects\2016\Division 7 TIP (Mott Macdonald)\B-4958 Guilford 106 (105 24CSU 2BMR)\Structures\Drawings\Final\401_B4958_SMU_EB - micropile.dgn

DocuSign Envelope ID: 6DEB83C1-BD30-4262-8F7C-6FB53D85B375

4/10/2018 8:59:56 AM G:\Projects\2016\Division 7 TIP (Mott Macdonald)\B-4958 Guilford 106 (105 24CSU 2BMR)\Structures\Drawings\Final\401_B4958_SMU_BT.dgn

NOTES:

STIRRUPS IN CAP MAY BE SHIFTED AS NECESSARY TO CLEAR DOWELS.

HOOKS ON "V" BARS MAY BE TURNED AS NECESSARY FOR PLACING REINFORCING STEEL.

FOR DRILLED PIERS, SEE SECTION 411 OF THE STANDARD SPECIFICATIONS.

ALL STEEL IN THE DRILLED PIERS IS INCLUDED IN THE PAY ITEMS FOR "REINFORCING STEEL" AND "SPIRAL COLUMN REINFORCING STEEL."

✳ INVERT ALTERNATE STIRRUPS.

DRILLED PIERS SHALL BE TERMINATED ONE FOOT ± ABOVE NORMAL WATER SURFACE ELEVATION FOR SHAFTS LOCATED IN WATER.

THE CONTRACTOR'S ATTENTION IS CALLED TO THE FACT THAT THE LONGITUDINAL REINFORCEMENT FOR DRILLED PIERS IS DETAILED WITH 3 FEET OF EXTRA LENGTH.

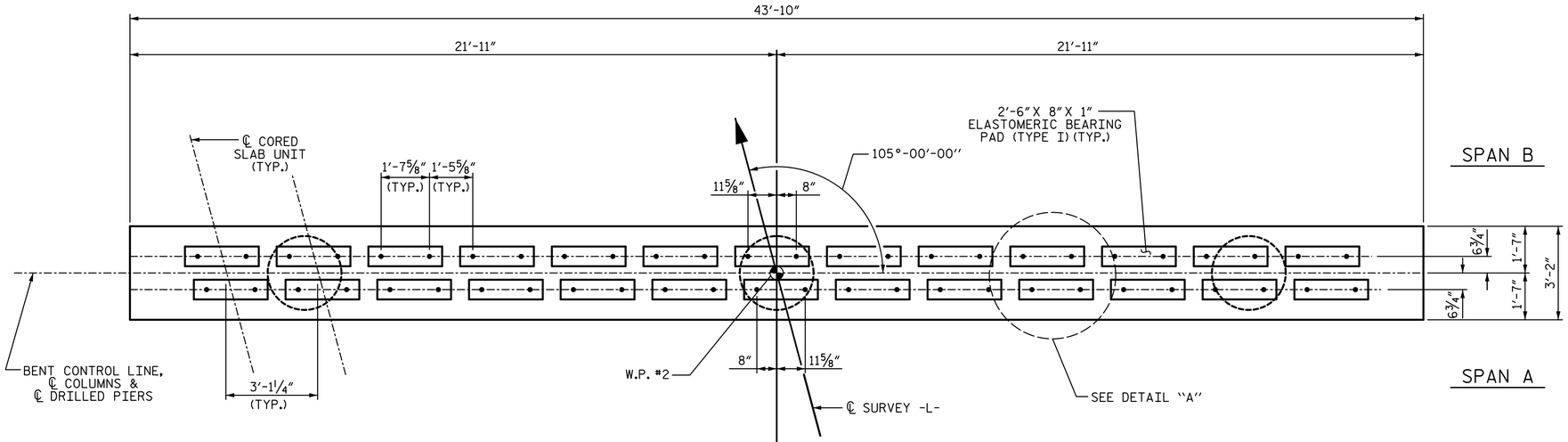

PLAN

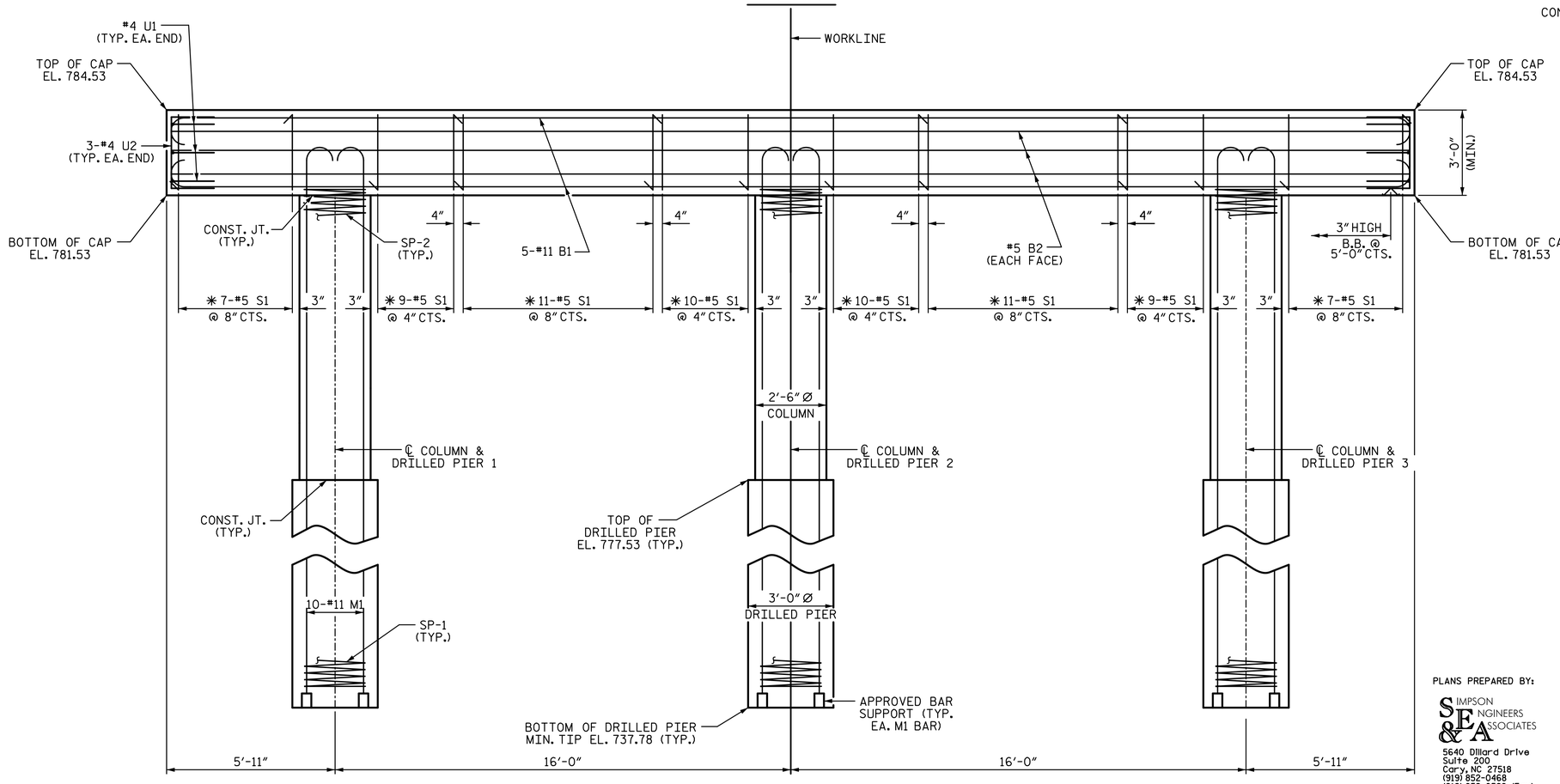

ELEVATION

DIMENSIONS & REINFORCING STEEL ARE TYPICAL FOR EACH COLUMN & DRILLED PIER UNLESS OTHERWISE NOTED.

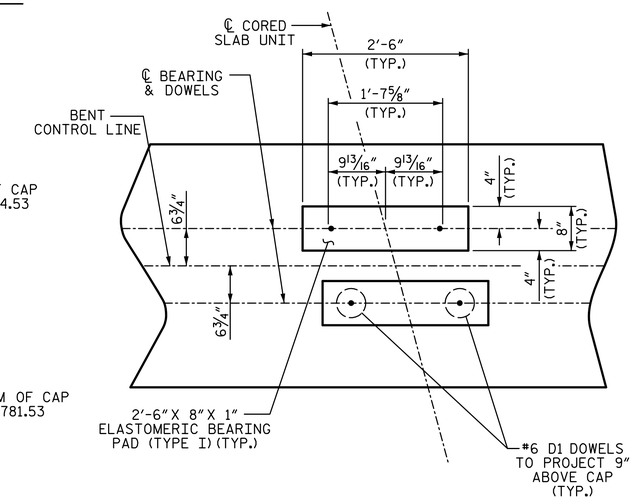

DETAIL "A"

(DIMENSIONS ARE TYPICAL EACH BEARING)

PROJECT NO. B-4958

GUILFORD COUNTY

STATION: 16+54.00 -L-

SHEET 1 OF 2

STATE OF NORTH CAROLINA
DEPARTMENT OF TRANSPORTATION
RALEIGH

SUBSTRUCTURE

BENT 1

PLANS PREPARED BY:

SIMPSON ENGINEERS & ASSOCIATES
5640 Dillard Drive
Suite 200
Cary, NC 27518
(919) 852-0468
(919) 852-0598 (Fax)
www.simpsonengr.com
LICENSURE NO. C-2521

NORTH CAROLINA PROFESSIONAL SEAL 11268 ENGINEER BETSY S. COX
4/10/2018

DOCUMENT NOT CONSIDERED FINAL UNLESS ALL SIGNATURES COMPLETED

DRAWN BY:	S.D. COOPER	DATE:	4-18
CHECKED BY:	B.S. COX	DATE:	4-18
DESIGN ENGINEER OF RECORD:	B.S. COX	DATE:	4-18

REVISIONS						SHEET NO.
NO.	BY:	DATE:	NO.	BY:	DATE:	S-23
1			3			TOTAL SHEETS
2			4			27

DocuSign Envelope ID: 6DEB83C1-BD30-4262-8F7C-6FB53D85B375

4/10/2018 8:59:56 AM G:\Projects\2016\Division 7 TIP (Mott Macdonald)\B-4958 Guilford 106 (105 24CSU 2BMR)\Structures\Drawings\Final\401_B4958_SMU_BT.dgn

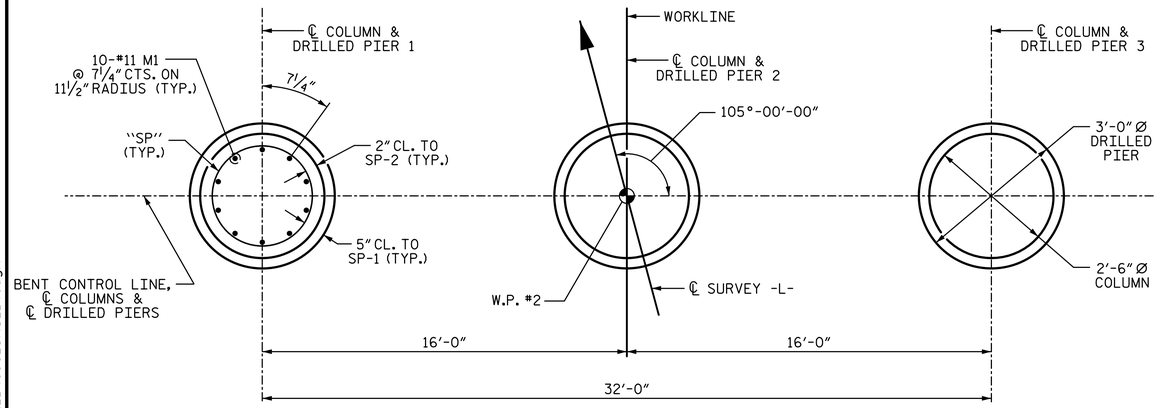

PLAN OF DRILLED PIERS & COLUMNS

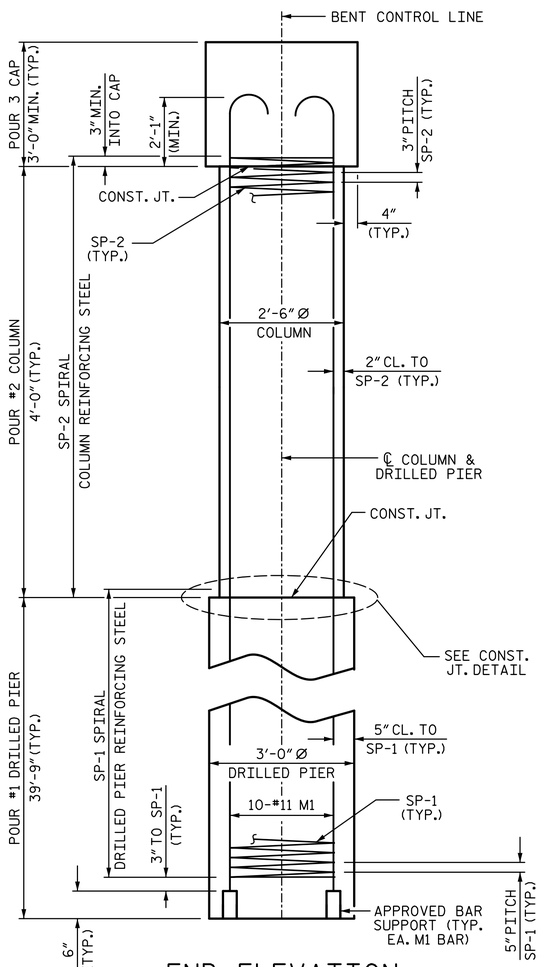

END ELEVATION

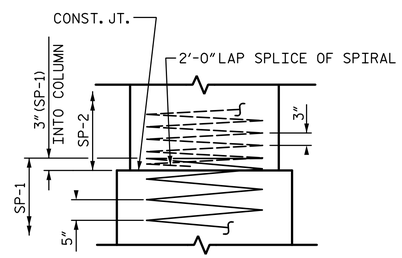

CONSTRUCTION JOINT DETAIL

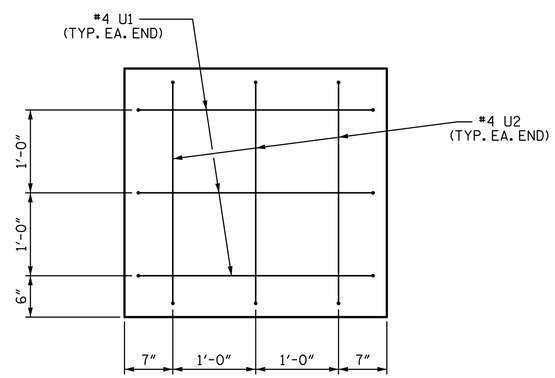

END OF CAP VIEW

(TYPICAL BOTH ENDS)

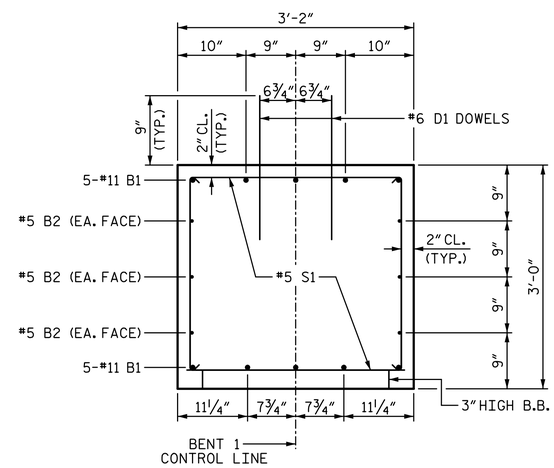

SECTION THRU CAP

BAR TYPES

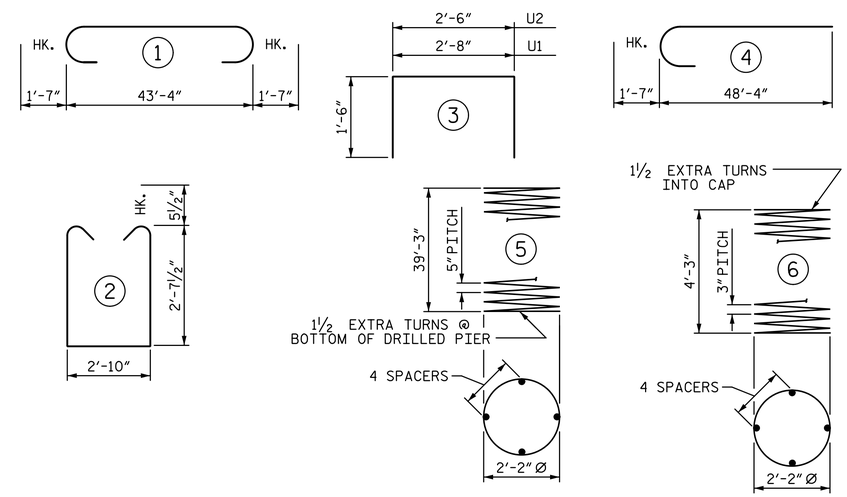

ALL BAR DIMENSIONS ARE OUT TO OUT

BILL OF MATERIAL
FOR ONE BENT

BAR	NO.	SIZE	TYPE	LENGTH	WEIGHT
B1	10	#11	1	46'-6"	2471
B2	6	#5	STR	43'-6"	272
D1	52	#6	STR	1'-6"	117
M1	30	#11	4	49'-11"	7956
S1	74	#5	2	9'-0"	695
U1	6	#4	3	5'-8"	23
U2	6	#4	3	5'-6"	22
REINFORCING STEEL (FOR ONE BENT)					11556 LB
SP-1	3	✳	5	639'-0"	1999
SP-2	3	✳✳	6	127'-0"	255
SPIRAL COLUMN REINFORCING STEEL (FOR ONE BENT)					2254 LB

✳ THE SP-1 SPIRAL REINFORCING STEEL SHALL BE W31 OR D-31 COLD DRAWN WIRE OR #5 PLAIN OR DEFORMED BAR

✳✳ THE SP-2 SPIRAL REINFORCING STEEL SHALL BE W20 OR D-20 COLD DRAWN WIRE OR #4 PLAIN OR DEFORMED BAR

CLASS A CONCRETE BREAKDOWN (FOR ONE BENT)	
POUR #2 (COLUMNS)	2.2 CY
POUR #3 (CAP)	15.4 CY
TOTAL CLASS A CONCRETE	17.6 CY

DRILLED PIERS: (FOR ONE BENT)	
DRILLED PIER CONCRETE	
POUR 1 (DRILLED PIERS)	31.2 CY
3'-0"Ø DRILLED PIER NOT IN SOIL	37 LF
3'-0"Ø DRILLED PIER IN SOIL	82.3 LF
PERMANENT STEEL CASING FOR 3'-0"Ø DRILLED PIER	46.6 LF
CSL TUBES	495.0 LF
SID INSPECTION	1 EA

PROJECT NO. B-4958

GUILFORD COUNTY

STATION: 16+54.00 -L-

SHEET 2 OF 2

STATE OF NORTH CAROLINA
DEPARTMENT OF TRANSPORTATION
RALEIGH

SUBSTRUCTURE

BENT 1

DRAWN BY: S.D. COOPER DATE: 4-18
CHECKED BY: B.S. COX DATE: 4-18
DESIGN ENGINEER OF RECORD: B.S. COX DATE: 4-18

PLANS PREPARED BY:

SIMPSON ENGINEERS & ASSOCIATES
5640 Dillard Drive
Suite 200
Cary, NC 27518
(919) 852-0468
(919) 852-0598 (Fax)
www.simpsonengr.com
LICENSURE NO. C-2521

NORTH CAROLINA PROFESSIONAL SEAL 11268 ENGINEER BETSY S. COX
4/10/2018

DOCUMENT NOT CONSIDERED FINAL UNLESS ALL SIGNATURES COMPLETED

REVISIONS								SHEET NO.
NO.	BY:	DATE:	NO.	BY:	DATE:			S-24
1			3					TOTAL SHEETS
2			4					27

DocuSign Envelope ID: 6DEB83C1-BD30-4262-8F7C-6FB53D85B375

4/10/2018 8:59:56 AM G:\Projects\2016\Division 7 TIP (Mott Macdonald)\B-4958 Guilford 106 (105 24CSU 2BMR)\Structures\Drawings\Final\401_B4958_SMU_RR.dgn

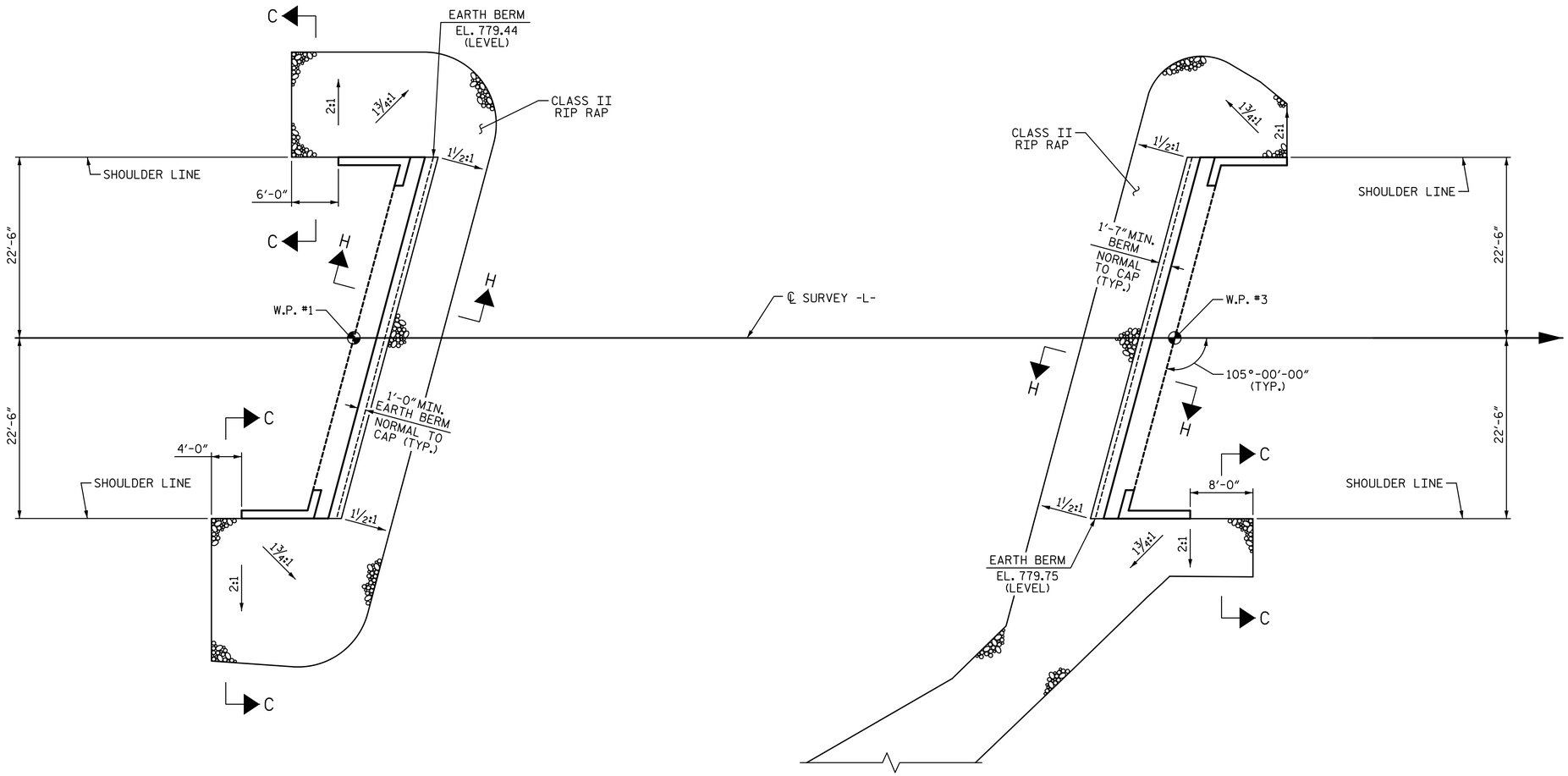

@ END BENT 1

@ END BENT 2

PLAN OF RIP RAP

ESTIMATED QUANTITIES		
BRIDGE @ STA. 16+54.00 -L-	RIP RAP CLASS II (2'-0" THICK)	GEOTEXTILE FOR DRAINAGE
	TONS	SQUARE YARDS
END BENT 1	125	140
END BENT 2	120	135

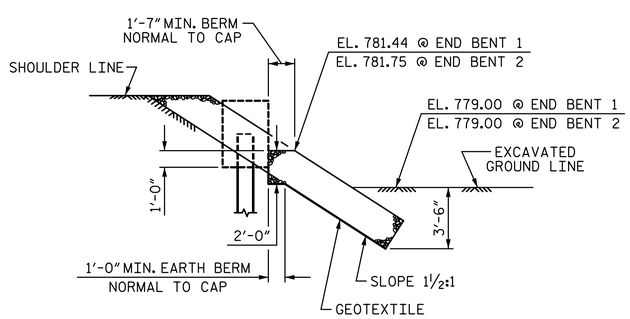

SECTION H-H

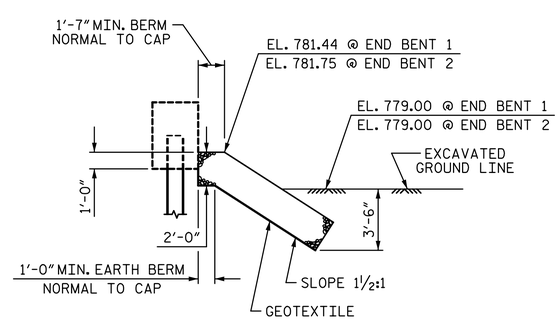

℄ SECTION
BERM RIP RAPPED

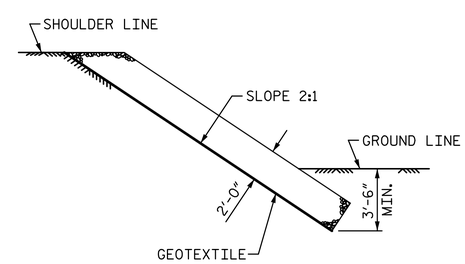

SECTION C-C

PROJECT NO. B-4958
GUILFORD COUNTY
STATION: 16+54.00 -L-

STATE OF NORTH CAROLINA
DEPARTMENT OF TRANSPORTATION
RALEIGH

RIP RAP DETAILS

PLANS PREPARED BY:

SIMPSON ENGINEERS & ASSOCIATES
5640 Dillard Drive
Suite 200
Cary, NC 27518
(919) 852-0468
(919) 852-0598 (Fax)
www.simpsonengr.com
LICENSURE NO. C-2521

NORTH CAROLINA PROFESSIONAL SEAL 11268 ENGINEER BETSY S. COX
4/10/2018

DOCUMENT NOT CONSIDERED FINAL
UNLESS ALL SIGNATURES COMPLETED

DRAWN BY:	S.D. COOPER	DATE:	4-18
CHECKED BY:	B.S. COX	DATE:	4-18
DESIGN ENGINEER OF RECORD:	B.S. COX	DATE:	4-18

REVISIONS						SHEET NO.
NO.	BY:	DATE:	NO.	BY:	DATE:	S-25
1			3			TOTAL SHEETS
2			4			27

DocuSign Envelope ID: 6DEB83C1-BD30-4262-8F7C-6FB53D85B375

4/10/2018 8:59:57 AM G:\Projects\2016\Division 7 TIP (Mott Macdonald)\B-4958 Guilford 106 (105 24CSU 2BMR)\Structures\Drawings\Final\401_B4958_SMU_AS.dgn

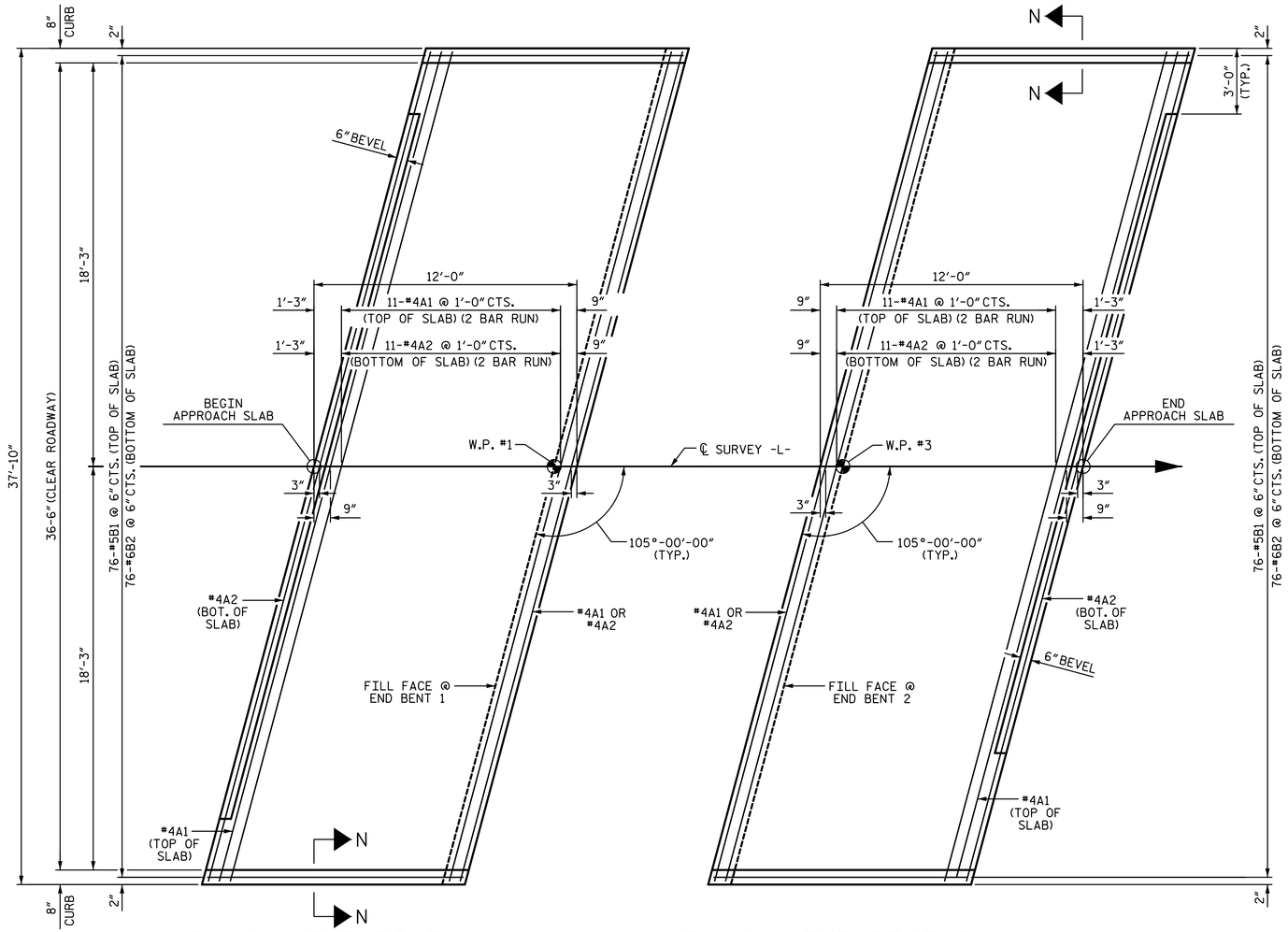

PLAN @ END BENT 1

PLAN @ END BENT 2

DIMENSIONS SHOWN ARE TYPICAL FOR BOTH APPROACH SLABS

NOTES:

FOR BRIDGE APPROACH FILL INCLUDING GEOTEXTILE, 4"Ø DRAINAGE PIPE, AND SELECT MATERIAL BACKFILL, SEE ROADWAY PLANS.

GEOTEXTILE SHALL BE TYPE 1 IN ACCORDANCE WITH THE STANDARD SPECIFICATIONS SECTION 1056.

SELECT MATERIAL BACKFILL (CLASS V OR CLASS VI) SHALL BE IN ACCORDANCE WITH STANDARD SPECIFICATIONS SECTION 1016.

SELECT MATERIAL BACKFILL IS TO BE CONTINUOUS ALONG FILL FACE OF BACKWALL FROM OUTSIDE EDGE TO OUTSIDE EDGE OF APPROACH SLAB.

FOR THE 4"Ø DRAINAGE PIPE OUTLET(S), SEE ROADWAY STANDARD DRAWINGS.

AREA BETWEEN THE WINGWALL AND APPROACH SLAB SHALL BE GRADED TO DRAIN THE WATER AWAY FROM THE FILL FACE OF THE BRIDGE AND SHALL BE PAVED. SEE ROADWAY PLANS.

APPROACH SLAB GROOVING IS NOT REQUIRED.

BILL OF MATERIAL

APPROACH SLAB AT EB 1

BAR	NO.	SIZE	TYPE	LENGTH	WEIGHT
✳ A1	26	#4	STR	20'-6"	356
A2	26	#4	STR	20'-4"	353
✳ B1	76	#5	STR	11'-1"	879
B2	76	#6	STR	11'-7"	1322
REINFORCING STEEL				LB	1675
✳ EPOXY COATED REINFORCING STEEL				LB	1235
CLASS AA CONCRETE				CY	22.9

APPROACH SLAB AT EB 2

BAR	NO.	SIZE	TYPE	LENGTH	WEIGHT
✳ A1	26	#4	STR	20'-6"	356
A2	26	#4	STR	20'-4"	353
✳ B1	76	#5	STR	11'-1"	879
B2	76	#6	STR	11'-7"	1322
REINFORCING STEEL				LB	1675
✳ EPOXY COATED REINFORCING STEEL				LB	1235
CLASS AA CONCRETE				CY	22.9

SPLICE CHART

BAR SIZE	EPOXY COATED	UNCOATED
#4	2'-0"	1'-9"
#5	2'-6"	2'-2"
#6	3'-10"	2'-7"

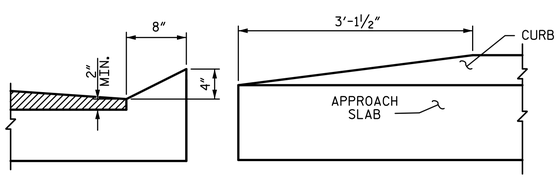

SECTION N-N

END OF CURB WITHOUT SHOULDER BERM GUTTER

CURB DETAILS

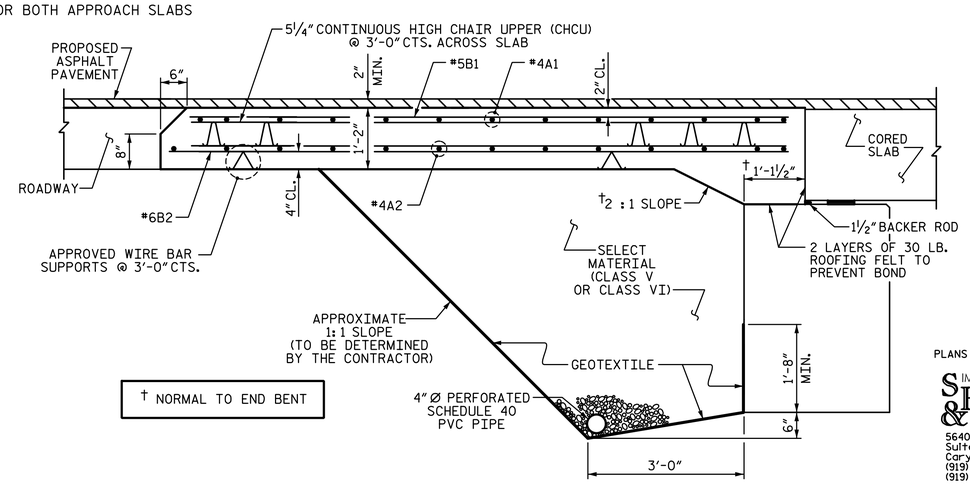

† NORMAL TO END BENT

SECTION THRU SLAB

(TYPE II - MODIFIED APPROACH FILL)

PROJECT NO. B-4958

GUILFORD COUNTY

STATION: 16+54.00 -L-

SHEET 1 OF 2

STATE OF NORTH CAROLINA
DEPARTMENT OF TRANSPORTATION
RALEIGH

BRIDGE APPROACH SLAB FOR PRESTRESSED CONCRETE CORED SLAB UNIT

(SUB-REGIONAL TIER - 105° SKEW)

PLANS PREPARED BY:

SIMPSON ENGINEERS & ASSOCIATES
5640 Dillard Drive
Suite 200
Cary, NC 27518
(919) 852-0468
(919) 852-0598 (Fax)
www.simpsonengr.com
LICENSURE NO. C-2521

NORTH CAROLINA PROFESSIONAL SEAL 11268 ENGINEER BETSY S. COX
4/10/2018

DOCUMENT NOT CONSIDERED FINAL UNLESS ALL SIGNATURES COMPLETED

REVISIONS						
NO.	BY:	DATE:	NO.	BY:	DATE:	
1			3			
2			4			

SHEET NO. S-26

TOTAL SHEETS 27

DRAWN BY:	S.D. COOPER	DATE:	4-18
CHECKED BY:	B.S. COX	DATE:	4-18
DESIGN ENGINEER OF RECORD:	B.S. COX	DATE:	4-18

DocuSign Envelope ID: 6DEB83C1-BD30-4262-8F7C-6FB53D85B375

4/10/2018 8:59:57 AM G:\Projects\2016\Division 7 TIP (Mott Macdonald)\B-4958 Guilford 106 (105 24CSU 2BMR)\Structures\Drawings\Final\401_B4958_SMU_AS.dgn

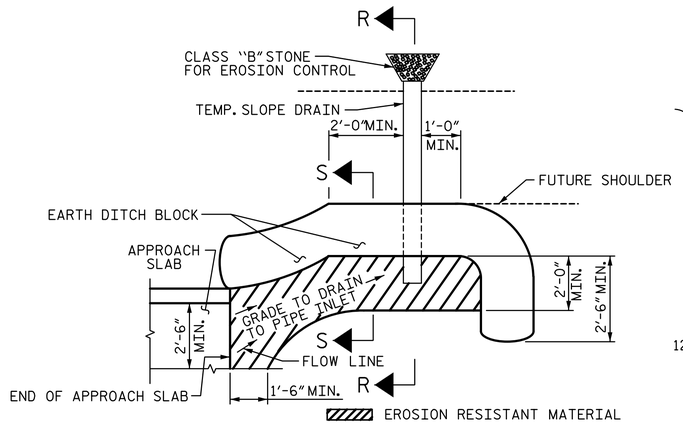

NOTE: IMMEDIATELY AFTER THE CONSTRUCTION OF THE APPROACH SLAB, THE CONTRACTOR SHALL PROVIDE TEMPORARY BERM AND SLOPE DRAIN. CONTRACTOR SHALL GRADE TO PIPE INLET AND PROVIDE EROSION RESISTANT MATERIAL AS SHOWN. THE EROSION RESISTANT MATERIAL SHALL BE EITHER 1) ASPHALT PLANT MIX, TYPE 1 OR TYPE 2, MIN. 2" DEPTH, 2) EROSION CONTROL MAT, OR 3) CONCRETE, AS DIRECTED BY THE ENGINEER. THE SLOPE DRAIN SHALL CONSIST OF A NON-PERFORATED TEMPORARY DRAINAGE PIPE, 12 INCHES IN DIAMETER.

PLAN VIEW

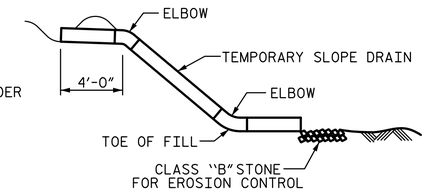

SECTION R-R

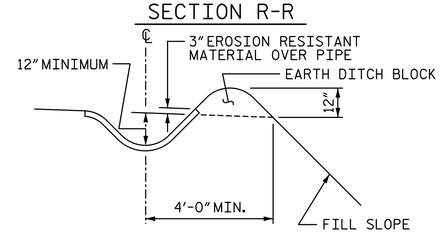

SECTION S-S

TEMPORARY BERM AND SLOPE DRAIN DETAILS

(TO BE USED WHEN SHOULDER BERM GUTTER IS REQUIRED)

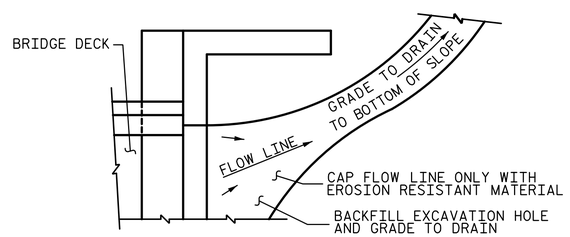

NOTE: IF THE APPROACH SLAB IS NOT CONSTRUCTED IMMEDIATELY AFTER THE BACKFILLING OF THE END BENT EXCAVATION, GRADE TO DRAIN TO THE BOTTOM OF THE SLOPE AND PROVIDE EROSION RESISTANT MATERIAL, SUCH AS FIBERGLASS ROVING OR AS DIRECTED BY THE ENGINEER TO PREVENT SOIL EROSION AND TO PROTECT THE AREA ADJACENT TO THE STRUCTURE. THE CONTRACTOR WILL BE REQUIRED TO REMOVE THESE MATERIALS PRIOR TO CONSTRUCTION OF THE APPROACH SLAB.

TEMPORARY DRAINAGE DETAIL

PROJECT NO. B-4958
GUILFORD COUNTY
STATION: 16+54.00 -L-

SHEET 2 OF 2

STATE OF NORTH CAROLINA
DEPARTMENT OF TRANSPORTATION
RALEIGH

BRIDGE APPROACH SLAB DETAILS

PLANS PREPARED BY:

SIMPSON ENGINEERS & ASSOCIATES
5640 Dillard Drive
Suite 200
Cary, NC 27518
(919) 852-0468
(919) 852-0598 (Fax)
www.simpsonengr.com
LICENSURE NO. C-2521

NORTH CAROLINA PROFESSIONAL SEAL 11268 ENGINEER BETSY S. COX
DocuSigned by: 6DC7D5B9F4B4E...
4/10/2018

DOCUMENT NOT CONSIDERED FINAL UNLESS ALL SIGNATURES COMPLETED

DRAWN BY:	S.D. COOPER	DATE:	4-18
CHECKED BY:	B.S. COX	DATE:	4-18
DESIGN ENGINEER OF RECORD:	B.S. COX	DATE:	4-18

REVISIONS						SHEET NO.
NO.	BY:	DATE:	NO.	BY:	DATE:	S-27
1			3			TOTAL SHEETS
2			4			27

DocuSign Envelope ID: 6DEB83C1-BD30-4262-8F7C-6FB53D85B375

4/10/2018 8:59:57 AM G:\Projects\2016\Division 7 TIP (Mott Macdonald)\B-4958 Guilford 106 (105 24CSU 2BMR)\Structures\Drawings\Final\401_B4958_SMU_SN.dgn

STANDARD NOTES

DESIGN DATA:

SPECIFICATIONS	A.A.S.H.T.O. (CURRENT)
LIVE LOAD	SEE PLANS
IMPACT ALLOWANCE	SEE A.A.S.H.T.O.
STRESS IN EXTREME FIBER OF	
STRUCTURAL STEEL - AASHTO M270 GRADE 36	20,000 LBS. PER SQ. IN.
- AASHTO M270 GRADE 50W	27,000 LBS. PER SQ. IN.
- AASHTO M270 GRADE 50	27,000 LBS. PER SQ. IN.
REINFORCING STEEL IN TENSION	
GRADE 60	24,000 LBS. PER SQ. IN.
CONCRETE IN COMPRESSION	1,200 LBS. PER SQ. IN.
CONCRETE IN SHEAR	SEE A.A.S.H.T.O.
STRUCTURAL TIMBER - TREATED OR	
UNTREATED - EXTREME FIBER STRESS	1,800 LBS. PER SQ. IN.
COMPRESSION PERPENDICULAR TO GRAIN OF TIMBER	375 LBS. PER SQ. IN.
EQUIVALENT FLUID PRESSURE OF EARTH	30 LBS. PER CU. FT. (MINIMUM)

MATERIAL AND WORKMANSHIP:

EXCEPT AS MAY OTHERWISE BE SPECIFIED ON PLANS OR IN THE SPECIAL PROVISIONS, ALL MATERIAL AND WORKMANSHIP SHALL BE IN ACCORDANCE WITH THE 2018 "STANDARD SPECIFICATIONS FOR ROADS AND STRUCTURES" OF THE N. C. DEPARTMENT OF TRANSPORTATION.

STEEL SHEET PILING FOR PERMANENT OR TEMPORARY APPLICATIONS SHALL BE HOT ROLLED.

CONCRETE:

UNLESS OTHERWISE REQUIRED ON PLANS, CLASS A CONCRETE SHALL BE USED FOR ALL PORTIONS OF ALL STRUCTURES WITH THE EXCEPTION THAT: CLASS AA CONCRETE SHALL BE USED IN BRIDGE SUPERSTRUCTURES, ABUTMENT BACKWALLS, AND APPROACH SLABS; AND CLASS B CONCRETE SHALL BE USED FOR SLOPE PROTECTION AND RIP RAP.

CONCRETE CHAMFERS:

UNLESS OTHERWISE NOTED ON THE PLANS, ALL EXPOSED CORNERS ON STRUCTURES SHALL BE CHAMFERED 3/4" WITH THE FOLLOWING EXCEPTIONS: TOP CORNERS OF CURBS MAY BE ROUNDED TO 1-1/2" RADIUS WHICH IS BUILT INTO CURB FORMS; CORNERS OF TRANSVERSE FLOOR EXPANSION JOINTS SHALL BE ROUNDED WITH A 1/4" FINISHING TOOL UNLESS OTHERWISE REQUIRED ON PLANS; AND CORNERS OF EXPANSION JOINTS IN THE ROADWAY FACES AND TOPS OF CURBS AND SIDEWALKS SHALL BE ROUNDED TO A 1/4" RADIUS WITH A FINISHING STONE OR TOOL UNLESS OTHERWISE REQUIRED ON PLANS.

DOWELS:

DOWELS WHEN INDICATED ON PLANS AS FOR CULVERT EXTENSIONS, SHALL BE EMBEDDED AT LEAST 12" INTO THE OLD CONCRETE AND GROUTED INTO PLACE WITH 1:2 CEMENT MORTAR.

ALLOWANCE FOR DEAD LOAD DEFLECTION, SETTLEMENT: ETC. IN CASTING SUPERSTRUCTURES:

BRIDGES SHALL BE BUILT ON THE GRADE OR VERTICAL CURVE SHOWN ON PLANS. SLABS, CURBS AND PARAPETS SHALL CONFORM TO THE GRADE OR CURVE.

ALL DIMENSIONS WHICH ARE GIVEN IN SECTION AND ARE AFFECTED BY DEAD LOAD DEFLECTIONS ARE DIMENSIONS AT CENTER LINE OF BEARING UNLESS OTHERWISE NOTED ON PLANS. IN SETTING FORMS FOR STEEL BEAM BRIDGES AND PRESTRESSED CONCRETE GIRDER BRIDGES, ADJUSTMENTS SHALL BE MADE DUE TO THE DEAD LOAD DEFLECTIONS FOR THE ELEVATIONS SHOWN. WHERE BLOCKS ARE SHOWN OVER BEAMS FOR BUILDING UP TO THE SLAB, THE VERTICAL DIMENSIONS OF THE BLOCKS SHALL BE ADJUSTED BETWEEN BEARINGS TO COMPENSATE FOR DEAD LOAD DEFLECTIONS, VERTICAL CURVE ORDINATE, AND ACTUAL BEAM CAMBER. WHERE BOTTOM OF SLAB IS IN LINE WITH BOTTOM OF TOP FLANGES, DEPTH OF SLAB BETWEEN BEARINGS SHALL BE ADJUSTED TO COMPENSATE FOR DEAD LOAD DEFLECTION, VERTICAL CURVE ORDINATE, AND ACTUAL BEAM CAMBER.

IN SETTING FALSEWORK AND FORMS FOR REINFORCED CONCRETE SPANS, AN ALLOWANCE SHALL BE MADE FOR DEAD LOAD DEFLECTIONS, SETTLEMENT OF FALSEWORK, AND PERMANENT CAMBER WHICH SHALL BE PROVIDED FOR IN ADDITION TO THE ELEVATIONS SHOWN. AFTER REMOVAL OF THE FALSEWORK, THE FINISHED STRUCTURES SHALL CONFORM TO THE PROFILE AND ELEVATIONS SHOWN ON THE PLANS AND CONSTRUCTION ELEVATIONS FURNISHED BY THE ENGINEER.

DETAILED DRAWINGS FOR FALSEWORK OR FORMS FOR BRIDGE SUPERSTRUCTURE AND ANY STRUCTURE OR PARTS OF A STRUCTURE AS NOTED ON THE PLANS SHALL BE SUBMITTED TO THE ENGINEER FOR APPROVAL BEFORE CONSTRUCTION OF THE FALSEWORK OR FORMS IS STARTED.

REINFORCING STEEL:

ALL REINFORCING STEEL SHALL BE DEFORMED. DIMENSIONS RELATIVE TO PLACEMENT OF REINFORCING ARE TO CENTERS OF BARS UNLESS OTHERWISE INDICATED IN THE PLANS. DIMENSIONS ON BAR DETAILS ARE TO CENTERS OF BARS OR ARE OUT TO OUT AS INDICATED ON PLANS.

WIRE BAR SUPPORTS SHALL BE PROVIDED FOR REINFORCING STEEL WHERE INDICATED ON THE PLANS. WHEN BAR SUPPORT PIECES ARE PLACED IN CONTINUOUS LINES, THEY SHALL BE SO PLACED THAT THE ENDS OF THE SUPPORTING WIRES SHALL BE LAPPED TO LOCK LEGS ON ADJOINING PIECES.

STRUCTURAL STEEL:

AT THE CONTRACTOR'S OPTION, HE MAY SUBSTITUTE 7/8" Ø SHEAR STUDS FOR THE 3/4" Ø STUDS SPECIFIED ON THE PLANS. THIS SUBSTITUTION SHALL BE MADE AT THE RATE OF 3 - 7/8" Ø STUDS FOR 4 - 3/4" Ø STUDS, AND STUD SPACING CHANGES SHALL BE MADE AS NECESSARY TO PROVIDE THE SAME EQUIVALENT NUMBER OF 7/8" Ø STUDS ALONG THE BEAM AS SHOWN FOR 3/4" Ø STUDS BASED ON THE RATIO OF 3 - 7/8" Ø STUDS FOR 4 - 3/4" Ø STUDS. STUDS OF THE LENGTH SPECIFIED ON THE PLANS MUST BE PROVIDED. THE MAXIMUM SPACING SHALL BE 2'-0".

EXCEPT AT THE INTERIOR SUPPORTS OF CONTINUOUS BEAMS WHERE THE COVER PLATE IS IN CONTACT WITH BEARING PLATE, THE CONTRACTOR MAY, AT HIS OPTION, SUBSTITUTE FOR THE COVER PLATES DESIGNATED ON THE PLANS COVER PLATES OF THE EQUIVALENT AREA PROVIDED THESE PLATES ARE AT LEAST 5/16" IN THICKNESS AND DO NOT EXCEED A WIDTH EQUAL TO THE FLANGE WIDTH LESS 2" OR A THICKNESS EQUAL TO 2 TIMES THE FLANGE THICKNESS. THE SIZE OF FILLET WELDS SHALL CONFORM TO THE REQUIREMENTS OF THE CURRENT ANSI/AASHTO/AWS "BRIDGE WELDING CODE". ELECTROSLAG WELDING WILL NOT BE PERMITTED.

WITH THE SOLE EXCEPTION OF EDGES AT SURFACES WHICH BEAR ON OTHER SURFACES, ALL SHARP EDGES AND ENDS OF SHAPES AND PLATES SHALL BE SLIGHTLY ROUNDED BY SUITABLE MEANS TO A RADIUS OF APPROXIMATELY 1/16 INCH OR EQUIVALENT FLAT SURFACE AT A SUITABLE ANGLE PRIOR TO PAINTING, GALVANIZING, OR METALLIZING.

HANDRAILS AND POSTS:

METAL STANDARDS AND FACES OF THE CONCRETE END POSTS FOR THE METAL RAIL SHALL BE SET NORMAL TO THE GRADE OF THE CURB, UNLESS OTHERWISE SHOWN ON PLANS. THE METAL RAIL AND TOPS OF CONCRETE POSTS USED WITH THE ALUMINUM RAIL SHALL BE BUILT PARALLEL TO THE GRADE OF THE CURB.

METAL HANDRAILS SHALL BE IN ACCORDANCE WITH THE PLANS. RAILS SHALL BE AS MANUFACTURED FOR BRIDGE RAILING. CASTINGS SHALL BE OF A UNIFORM APPEARANCE. FINS AND OTHER DEFORMATIONS RESULTING FROM CASTING OR OTHERWISE SHALL BE REMOVED IN A MANNER SO THAT A UNIFORM COLORING OF THE COMPLETED CASTING SHALL BE OBTAINED. CASTINGS WITH DISCOLORATIONS OR OF NON-UNIFORM COLORING WILL NOT BE ACCEPTED. CERTIFIED MILL REPORTS ARE REQUIRED FOR METAL RAILS AND POSTS.

SPECIAL NOTES:

GENERALLY, IN CASE OF DISCREPANCY, THIS STANDARD SHEET OF NOTES SHALL GOVERN OVER THE SPECIFICATIONS, BUT THE REMAINDER OF THE PLANS SHALL GOVERN OVER NOTES HEREON, AND SPECIAL PROVISIONS SHALL GOVERN OVER ALL. SEE SPECIFICATIONS ARTICLE 105-4.

ENGLISH

JANUARY, 1990