DocuSign Envelope ID: 8C0CC173-5919-4C42-A3E0-41D83EA3A04B

TIP PROJECT: 17BP.7.R.101

CONTRACT:

STATE	STATE PROJECT REFERENCE NO.	SHEET NO.	TOTAL SHEETS
N.C.	17BP.7.R.101	1	

STATE PROJECT NO.	F.A. PROJ. NO.	DESCRIPTION

STATE OF NORTH CAROLINA
DIVISION OF HIGHWAYS

ROCKINGHAM COUNTY

LOCATION: BRIDGE NO. 39 OVER JACOBS CREEK ON SR 2316 (BETHANY ROAD)

TYPE OF WORK: GRADING, PAVING, DRAINAGE AND STRUCTURE

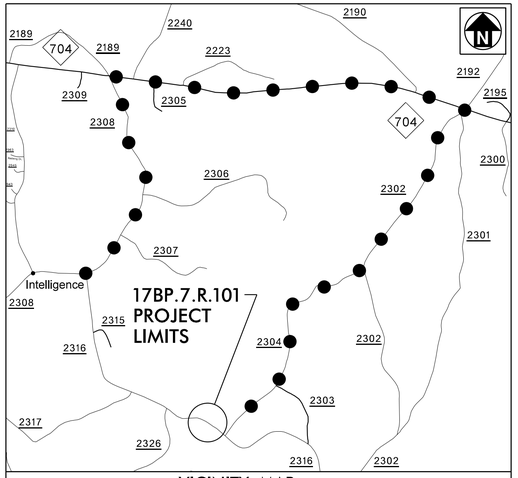

VICINITY MAP
(NOT TO SCALE)
OFF-SITE DETOUR

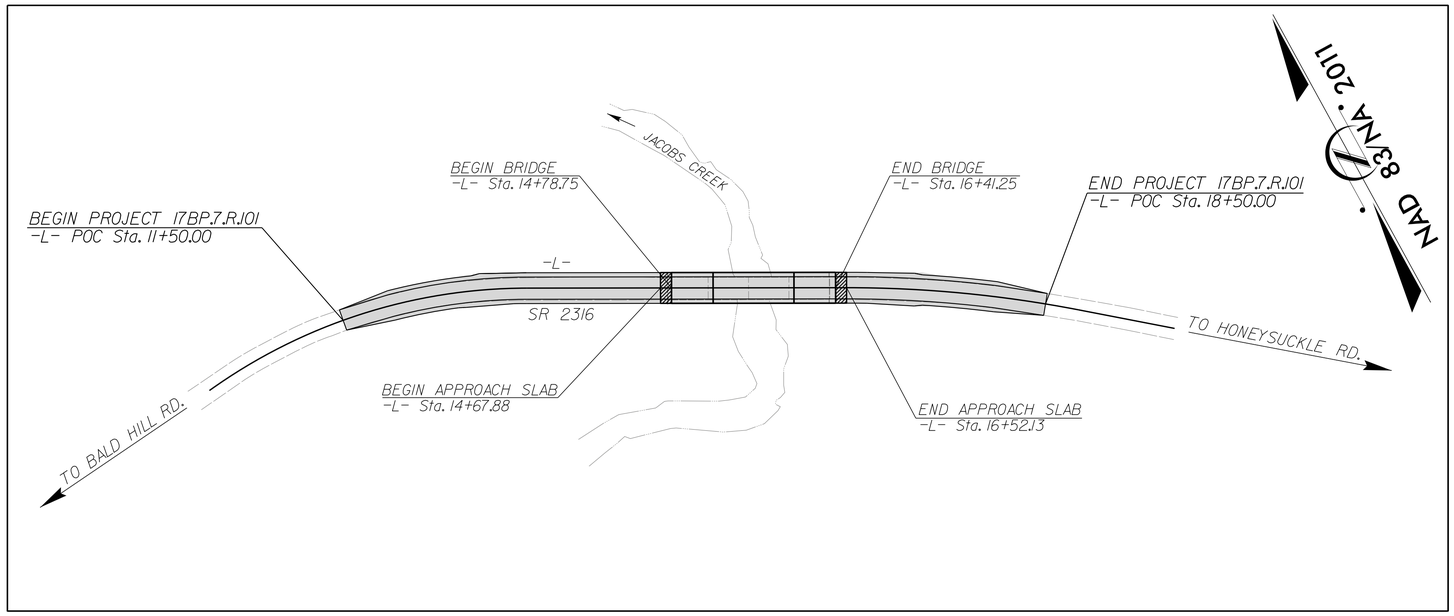

*DESIGN EXCEPTION:
MIN. HORIZONTAL CURVE RADIUS
HORIZONTAL SSD

DOCUMENT NOT CONSIDERED FINAL UNLESS ALL SIGNATURES COMPLETED

STATE OF NORTH CAROLINA DEPARTMENT OF TRANSPORTATION

DESIGN DATA

ADT 2010 = 710
ADT 2025 = 1420

V = 55 MPH

SUB REGIONAL TIER
LOCAL

PROJECT LENGTH

LENGTH ROADWAY TIP PROJECT	=	0.102 MILES
LENGTH STRUCTURE TIP PROJECT	=	0.031 MILES
TOTAL LENGTH TIP PROJECT	=	0.133 MILES

Prepared in the Office of Hatch Mott MacDonald for

DIVISION 7

NORTH CAROLINA DEPARTMENT OF TRANSPORTATION

2012 STANDARD SPECIFICATIONS

LETTING DATE:

TIM JORDAN, PE
PROJECT ENGINEER

DAVID FUH, PE
HYDRAULICS ENGINEER

NCDOT CONTACT: TIM POWERS, PE
DIVISION BRIDGE PROGRAM MANAGER

ROADWAY DESIGN ENGINEER

NORTH CAROLINA PROFESSIONAL SEAL 21102 ENGINEER TIMOTHY JORDAN

DocuSign Envelope ID: 3A6529B19D274A4... 5/24/2017
SIGNATURE: P.E.

HYDRAULICS ENGINEER

NORTH CAROLINA PROFESSIONAL SEAL 19732 ENGINEER DAVID FUH

DocuSign Envelope ID: 4FC6AA8775F8A4B... 5/24/2017
SIGNATURE: P.E.

PLANS PREPARED BY:

MOTT MACDONALD
PO Box 700
Fuquay-Varina, NC 27526
(919) 552-2253
(919) 552-2254 (Fax)
www.mottmac.com

LICENSE NO. F-0669

ICA Engineering
5121 Kingdom Way, Suite 100
Raleigh, NC 27607
NC License No F-0258

5/24/2017
8:23:15 AM
R:\Roadway\Proj\7800039_rdy_tsh.dgn
Job:66165

DocuSign Envelope ID: 8C0CC173-5919-4C42-A3E0-41D83EA3A04B

PROJECT REFERENCE	SHEET NO.
17BP.7.R.101 – ROCKINGHAM 39	1–A

ROADWAY DESIGN ENGINEER

NORTH CAROLINA PROFESSIONAL SEAL 21102 ENGINEER JAMES TIMOTHY JOHNSON

DocuSigned by: James Timothy Johnson
5/24/2017

MOTT MACDONALD I & E, LLC
LICENSE NO. F-0669

DOCUMENT NOT CONSIDERED FINAL UNLESS ALL SIGNATURES COMPLETED

Prepared in the Office of:

MOTT MACDONALD
PO Box 700
Fuquay-Varina, NC 27526
www.mottmac.com

GENERAL NOTES:

2012 SPECIFICATIONS
EFFECTIVE: 01-17-2012
REVISED: 01-24-2017

GRADE LINE:
GRADING AND SURFACING:

THE GRADE LINES SHOWN DENOTE THE FINISHED ELEVATION OF THE PROPOSED SURFACING AT GRADE POINTS SHOWN ON THE TYPICAL SECTIONS. GRADE LINES MAY BE ADJUSTED AT THEIR BEGINNING AND ENDING AND AT STRUCTURES AS DIRECTED BY THE ENGINEER IN ORDER TO SECURE A PROPER TIE-IN.

CLEARING:

CLEARING ON THIS PROJECT SHALL BE PERFORMED TO THE LIMITS ESTABLISHED BY METHOD II.

SUPERELEVATION:

ALL CURVES ON THIS PROJECT SHALL BE SUPERELEVATED IN ACCORDANCE WITH STD. NO. 225.04 USING THE RATE OF SUPERELEVATION AND RUNOFF SHOWN ON THE PLANS. SUPERELEVATION IS TO BE REVOLVED ABOUT THE GRADE POINTS SHOWN ON THE TYPICAL SECTIONS.

SHOULDER CONSTRUCTION:

ASPHALT, EARTH, AND CONCRETE SHOULDER CONSTRUCTION ON THE HIGH SIDE OF SUPERELEVATED CURVES SHALL BE IN ACCORDANCE WITH STD. NO. 560.01

GUARDRAIL:

THE GUARDRAIL LOCATIONS SHOWN ON THE PLANS MAY BE ADJUSTED DURING CONSTRUCTION AS DIRECTED BY THE ENGINEER. THE CONTRACTOR SHOULD CONSULT WITH THE ENGINEER PRIOR TO ORDERING GUARDRAIL MATERIAL.

SUBSURFACE PLANS:

NO SUBSURFACE PLANS ARE AVAILABLE ON THIS PROJECT. THE CONTRACTOR SHOULD MAKE HIS OWN INVESTIGATION AS TO THE SUBSURFACE CONDITIONS.

END BENTS:

THE ENGINEER SHALL CHECK THE STRUCTURE END BENT PLANS, DETAILS, AND CROSS-SECTION PRIOR TO SETTING OF THE SLOPE STAKES FOR THE EMBANKMENT OR EXCAVATION APPROACHING A BRIDGE.

UTILITIES:

UTILITY OWNERS ON THIS PROJECT ARE ENERGY UNITED, CENTURY LINK AND PIEDMONT NATURAL GAS.

ANY RELOCATION OF EXISTING UTILITIES WILL BE ACCOMPLISHED BY OTHERS.

RIGHT-OF-WAY MARKERS:

ALL RIGHT-OF-WAY MARKERS ON THIS PROJECT SHALL BE PLACED BY OTHERS.

INDEX OF SHEETS

SHEET NUMBER	DESCRIPTION
1	TITLE SHEET
1-A	INDEX OF SHEETS, GENERAL NOTES, AND LIST OF STANDARD DRAWINGS
1-B	CONVENTIONAL SYMBOLS
2	PAVEMENT SCHEDULE AND TYPICAL SECTIONS
2-A	DETAIL FOR STRUCTURE ANCHOR UNITS
3	GUARDRAIL, DRAINAGE & EARTHWORK SUMMARY
4	PLAN SHEET AND PROFILE SHEET
TMP-1 THRU TMP-3	TRAFFIC MANAGEMENT PLANS
EC-1 THRU EC-5	EROSION CONTROL PLANS
UO-1	UTILITIES BY OTHERS PLAN
X-1 THRU X-7	CROSS-SECTIONS
S-1 THRU S-26	STRUCTURE PLANS
SN	STRUCTURE NOTES

EFF. 01-17-2012
REV. 02-29-2016

2012 ROADWAY ENGLISH STANDARD DRAWINGS

The following Roadway Standards as appear in "Roadway Standard Drawings" Highway Design Branch - N. C. Department of Transportation - Raleigh, N. C., Dated January, 2012 are applicable to this project and by reference hereby are considered a part of these plans:

STD.NO.	TITLE
DIVISION 2 - EARTHWORK	
200.03	Method of Clearing - Method III
225.02	Guide for Grading Subgrade - Secondary and Local
225.04	Method of Obtaining Superelevation - Two Lane Pavement
DIVISION 3 - PIPE CULVERTS	
300.01	Method of Pipe Installation
DIVISION 4 - MAJOR STRUCTURES	
422.11	Reinforced Bridge Approach Fills - Sub Regional Tier
DIVISION 5 - SUBGRADE, BASES AND SHOULDERS	
560.01	Method of Shoulder Construction - High Side of Superelevated Curve - Method I
DIVISION 8 - INCIDENTALS	
840.00	Concrete Base Pad for Drainage Structures
840.25	Anchorage for Frames - Brick or Concrete or Precast
840.29	Frames and Narrow Slot Flat Grates
840.35	Traffic Bearing Grated Drop Inlet - for Cast Iron Double Frame and Grates
840.46	Traffic Bearing Precast Drainage Structure
840.66	Drainage Structure Steps
846.01	Concrete Curb, Gutter and Curb & Gutter
846.04	Drop Inlet Installation in Shoulder Berm Gutter
862.01	Guardrail Placement
862.02	Guardrail Installation
876.02	Guide for Rip Rap at Pipe Outlets

jor66165
R:\Roadway\Proj\7B0039_rdy_pshtA.dgn
5/24/2017 8:23:17 AM

PROJECT REFERENCE	SHEET NO.
17BP.7.R.101 – ROCKINGHAM 39	1–B

Note: Not to Scale

****S.U.E. = Subsurface Utility Engineering***

STATE OF NORTH CAROLINA
DIVISION OF HIGHWAYS

CONVENTIONAL PLAN SHEET SYMBOLS

BOUNDARIES AND PROPERTY:

- State Line
- County Line
- Township Line
- City Line
- Reservation Line
- Property Line
- Existing Iron Pin — EIP
- Property Corner
- Property Monument — ECM
- Parcel/Sequence Number — 123
- Existing Fence Line
- Proposed Woven Wire Fence
- Proposed Chain Link Fence
- Proposed Barbed Wire Fence
- Existing Wetland Boundary — WLB
- Proposed Wetland Boundary — WLB
- Existing Endangered Animal Boundary — EAB
- Existing Endangered Plant Boundary — EPB
- Known Soil Contamination: Area or Site
- Potential Soil Contamination: Area or Site

BUILDINGS AND OTHER CULTURE:

- Gas Pump Vent or U/G Tank Cap
- Sign — S
- Well — W
- Small Mine
- Foundation
- Area Outline
- Cemetery
- Building
- School
- Church
- Dam

HYDROLOGY:

- Stream or Body of Water
- Hydro, Pool or Reservoir
- Jurisdictional Stream — JS
- Buffer Zone 1 — BZ 1
- Buffer Zone 2 — BZ 2
- Flow Arrow
- Disappearing Stream
- Spring
- Wetland
- Proposed Lateral, Tail, Head Ditch — FLOW
- False Sump

RAILROADS:

- Standard Gauge — CSX TRANSPORTATION
- RR Signal Milepost — MILEPOST 35
- Switch — SWITCH
- RR Abandoned
- RR Dismantled

RIGHT OF WAY:

- Baseline Control Point
- Existing Right of Way Marker
- Existing Right of Way Line
- Proposed Right of Way Line — RW
- Proposed Right of Way Line with Iron Pin and Cap Marker — RW
- Proposed Right of Way Line with Concrete or Granite R/W Marker — RW
- Proposed Control of Access Line with Concrete C/A Marker — CA
- Existing Control of Access — CA
- Proposed Control of Access — CA
- Existing Easement Line — E
- Proposed Temporary Construction Easement — E
- Proposed Temporary Drainage Easement — TDE
- Proposed Permanent Drainage Easement — PDE
- Proposed Permanent Drainage / Utility Easement — DUE
- Proposed Permanent Utility Easement — PUE
- Proposed Temporary Utility Easement — TUE
- Proposed Aerial Utility Easement — AUE
- Proposed Permanent Easement with Iron Pin and Cap Marker

ROADS AND RELATED FEATURES:

- Existing Edge of Pavement
- Existing Curb
- Proposed Slope Stakes Cut — C
- Proposed Slope Stakes Fill — F
- Proposed Curb Ramp — CR
- Existing Metal Guardrail
- Proposed Guardrail
- Existing Cable Guiderail
- Proposed Cable Guiderail
- Equality Symbol
- Pavement Removal

VEGETATION:

- Single Tree
- Single Shrub
- Hedge
- Woods Line
- Orchard
- Vineyard — Vineyard

EXISTING STRUCTURES:

MAJOR:

- Bridge, Tunnel or Box Culvert — CONC
- Bridge Wing Wall, Head Wall and End Wall — CONC WW

MINOR:

- Head and End Wall — CONC HW
- Pipe Culvert
- Footbridge
- Drainage Box: Catch Basin, DI or JB — CB
- Paved Ditch Gutter
- Storm Sewer Manhole — S
- Storm Sewer — S

UTILITIES:

POWER:

- Existing Power Pole
- Proposed Power Pole
- Existing Joint Use Pole
- Proposed Joint Use Pole
- Power Manhole — P
- Power Line Tower
- Power Transformer
- U/G Power Cable Hand Hole
- H–Frame Pole
- Recorded U/G Power Line — P
- Designated U/G Power Line (S.U.E.*) — P

TELEPHONE:

- Existing Telephone Pole
- Proposed Telephone Pole
- Telephone Manhole — T
- Telephone Booth
- Telephone Pedestal — T
- Telephone Cell Tower
- U/G Telephone Cable Hand Hole — HH
- Recorded U/G Telephone Cable — T
- Designated U/G Telephone Cable (S.U.E.*) — T
- Recorded U/G Telephone Conduit — TC
- Designated U/G Telephone Conduit (S.U.E.*) — TC
- Recorded U/G Fiber Optics Cable — T FO
- Designated U/G Fiber Optics Cable (S.U.E.*) — T FO

WATER:

- Water Manhole — W
- Water Meter
- Water Valve
- Water Hydrant
- Recorded U/G Water Line — W
- Designated U/G Water Line (S.U.E.*) — W
- Above Ground Water Line — A/G Water

TV:

- TV Satellite Dish
- TV Pedestal — C
- TV Tower
- U/G TV Cable Hand Hole — HH
- Recorded U/G TV Cable — TV
- Designated U/G TV Cable (S.U.E.*) — TV
- Recorded U/G Fiber Optic Cable — TV FO
- Designated U/G Fiber Optic Cable (S.U.E.*) — TV FO

GAS:

- Gas Valve
- Gas Meter
- Recorded U/G Gas Line — G
- Designated U/G Gas Line (S.U.E.*) — G
- Above Ground Gas Line — A/G Gas

SANITARY SEWER:

- Sanitary Sewer Manhole
- Sanitary Sewer Cleanout
- U/G Sanitary Sewer Line — SS
- Above Ground Sanitary Sewer — A/G Sanitary Sewer
- Recorded SS Forced Main Line — FSS
- Designated SS Forced Main Line (S.U.E.*) — FSS

MISCELLANEOUS:

- Utility Pole
- Utility Pole with Base
- Utility Located Object
- Utility Traffic Signal Box — S
- Utility Unknown U/G Line — ?UTL
- U/G Tank; Water, Gas, Oil
- Underground Storage Tank, Approx. Loc. — UST
- A/G Tank; Water, Gas, Oil
- Geoenvironmental Boring
- U/G Test Hole (S.U.E.*)
- Abandoned According to Utility Records — AATUR
- End of Information — E.O.I.

jor66165
R:\RoadwayProj\780039_rdy_psh1B.dgn
5/24/2017 8:23:19 AM

DocuSign Envelope ID: 8C0CC173-5919-4C42-A3E0-41D83EA3A04B

PROJECT REFERENCE	SHEET NO.
17BP.7.R.101 – ROCKINGHAM 39	2

ROADWAY DESIGN ENGINEER

NORTH CAROLINA PROFESSIONAL SEAL 21102 ENGINEER

Digitally signed by TIMOTHY JORDAN
5/24/2017

MOTT MACDONALD I & E, LLC
LICENSE NO. F-0669

DOCUMENT NOT CONSIDERED FINAL UNLESS ALL SIGNATURES COMPLETED

Prepared in the Office of:
MOTT MACDONALD
PO Box 700
Fuquay-Varina, NC 27526
www.mottmac.com

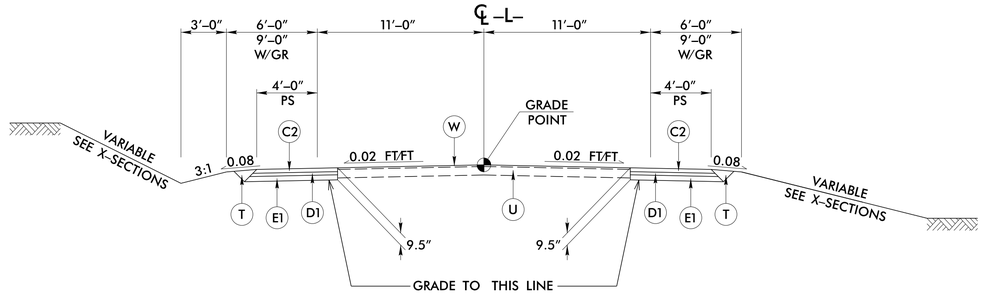

TYPICAL SECTION NO. 1

TRANSITION FROM EXISTING TO TYPICAL SECTION NO. 1:
–L– STA 11+50.00 TO 12+00.00

USE TYPICAL SECTION NO. 1:
–L– STA 12+00.00 TO 14+78.75 (BEGIN BRIDGE)
–L– STA 16+95.00 TO 18+00.00

TRANSITION FROM TYPICAL SECTION NO. 1 TO EXISTING:
–L– STA 18+00.00 TO 18+50.00

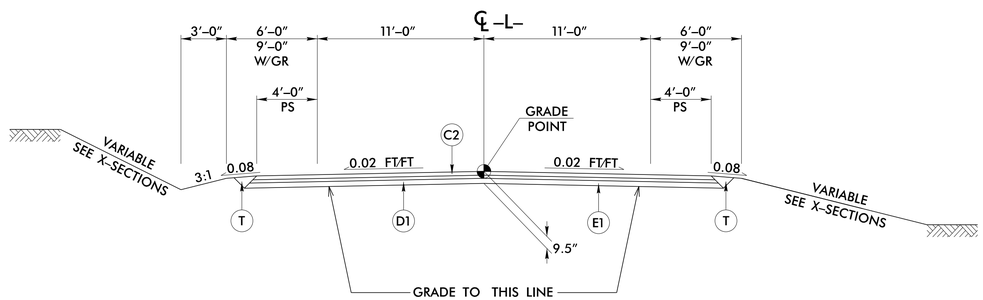

TYPICAL SECTION NO. 2

USE TYPICAL SECTION NO. 2:
–L– STA 16+41.25 (END BRIDGE) TO 16+95.00

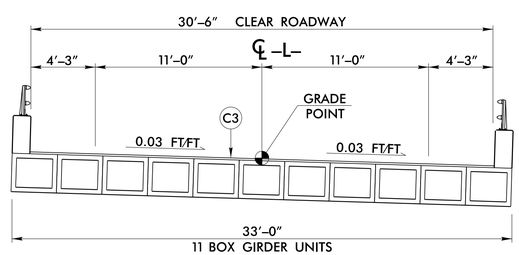

TYPICAL SECTION NO. 3

USE TYPICAL SECTION NO. 3:
–L– STA 14+78.75 (BEGIN BRIDGE) TO 16+41.25 (END BRIDGE)

NOTE: SEE STRUCTURE PLANS FOR PAVEMENT DEPTHS ON STRUCTURE

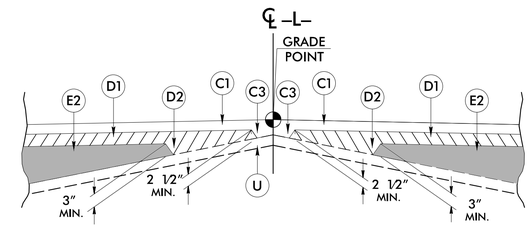

Detail Showing Method of Wedging

PAVEMENT SCHEDULE	
C1	PROP. APPROX. 1½" ASPHALT CONCRETE SURFACE COURSE, TYPE S9.5B, AT AN AVERAGE RATE OF 168 LBS. PER SQ. YD.
C2	PROP. APPROX. 3" ASPHALT CONCRETE SURFACE COURSE, TYPE S9.5B, AT AN AVERAGE RATE OF 168 LBS. PER SQ. YD. IN EACH OF TWO LAYERS.
C3	PROP. VAR. DEPTH ASPHALT CONCRETE SURFACE COURSE, TYPE S9.5B, AT AN AVERAGE RATE OF 112 LBS. PER SQ. YD. PER 1" DEPTH. TO BE PLACED IN LAYERS NOT LESS THAN 1½" IN DEPTH OR GREATER THAN 2" IN DEPTH.
D1	PROP. APPROX. 2½" ASPHALT CONCRETE INTERMEDIATE COURSE, TYPE I19.0B, AT AN AVERAGE RATE OF 285 LBS. PER SQ. YD.
D2	PROP. VAR. DEPTH ASPHALT CONCRETE INTERMEDIATE COURSE, TYPE I19.0B, AT AN AVERAGE RATE OF 114 LBS. PER SQ. YD. PER 1" DEPTH, TO BE PLACED IN LAYERS NOT LESS THAN 2½" IN DEPTH OR GREATER THAN 4" IN DEPTH.
E1	PROP. APPROX. 4" ASPHALT CONCRETE BASE COURSE, TYPE B25.0B, AT AN AVERAGE RATE OF 456 LBS. PER SQ. YD.
E2	PROP. VAR. DEPTH ASPHALT CONCRETE BASE COURSE, TYPE B25.0B, AT AN AVERAGE RATE OF 114 LBS. PER SQ. YD. PER 1" DEPTH TO BE PLACED IN LAYERS NOT LESS THAN 3" IN DEPTH OR GREATER THAN 5½" IN DEPTH.
T	EARTH MATERIAL.
U	EXISTING PAVEMENT.
W	WEDGING (SEE DETAIL SHOWING METHOD OF WEDGING).

NOTE: PAVEMENT EDGE SLOPES ARE 1:1 UNLESS SHOWN OTHERWISE.

jor66165
R:\Roadway\Proj\780039_rdy_typ.dgn
5/24/2017 8:23:21 AM

$$$$$$SYSTIME$$$$$
$$$$$$$$$$$$$$$$DGN$$$$$$$$$$$$$$$$
$$$$USERNAME$$$$

STATE OF
NORTH CAROLINA
DEPT. OF TRANSPORTATION
DIVISION OF HIGHWAYS
RALEIGH, N.C.

ENGLISH DETAIL DRAWING FOR
STRUCTURE ANCHOR UNITS
GUARDRAIL ANCHOR UNIT, TYPE III FOR ATTACHMENT TO
RAIL ON BRIDGE - SUB REGIONAL TIER

SHEET 2 OF 7
862d03

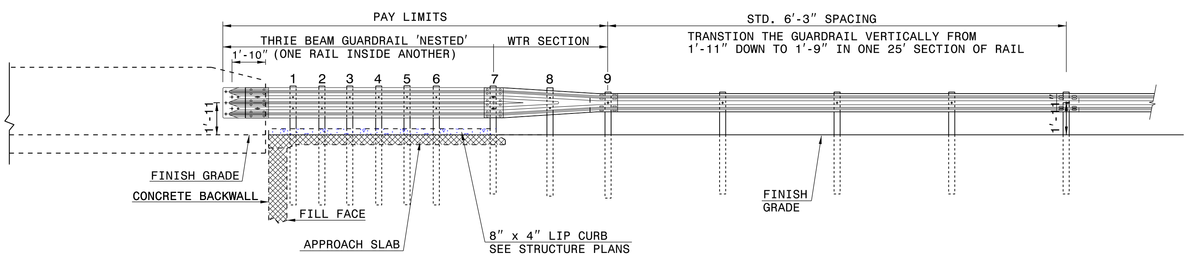

ELEVATION

NOTE:
- **POST NOT REQUIRED FOR SKEW ANGLES GREATER THAN 150° OR LESS THAN 30° UNLESS OTHERWISE DIRECTED BY THE ENGINEER.
- *THE DISTANCE FROM END OF BRIDGE RAIL TO CENTER LINE OF THE FIRST POST SHOULD BE 11½" IF CONCRETE BACKWALL IS NOT PRESENT.
- -SHOULDER BERM GUTTER MUST BE INSTALLED TO THE LIMITS 8" x 4" LIP CURB IS SHOWN IF ANCHOR UNIT IS NOT ADJACENT TO AN APPROACH SLAB.
- -MEASURE GUARDRAIL HEIGHT FROM THE TOP OF ADJACENT SURFACE (SHOULDER, BERM, OR GUTTER).
- -LAP JOINTS IN THE DIRECTION OF TRAFFIC FLOW.
- -SEE SHEET 5 FOR POST SECTIONS 1 THRU 9.

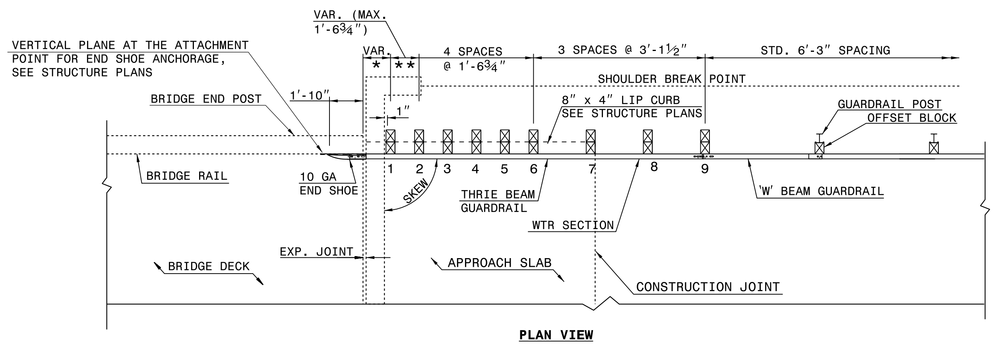

PLAN VIEW

GUARDRAIL ANCHOR UNIT, TYPE III FOR ATTACHMENT TO RAIL ON BRIDGE - SUB REGIONAL TIER

STATE OF
NORTH CAROLINA
DEPT. OF TRANSPORTATION
DIVISION OF HIGHWAYS
RALEIGH, N.C.

ENGLISH DETAIL DRAWING FOR
STRUCTURE ANCHOR UNITS
GUARDRAIL ANCHOR UNIT, TYPE III FOR ATTACHMENT TO
RAIL ON BRIDGE - SUB REGIONAL TIER

SHEET 2 OF 7
862d03

STATE OF
NORTH CAROLINA
DEPT. OF TRANSPORTATION
DIVISION OF HIGHWAYS
RALEIGH, N.C.

ENGLISH DETAIL DRAWING FOR
STRUCTURE ANCHOR UNITS
GUARDRAIL ANCHOR UNIT, TYPE III

SHEET 3 OF 7
862d03

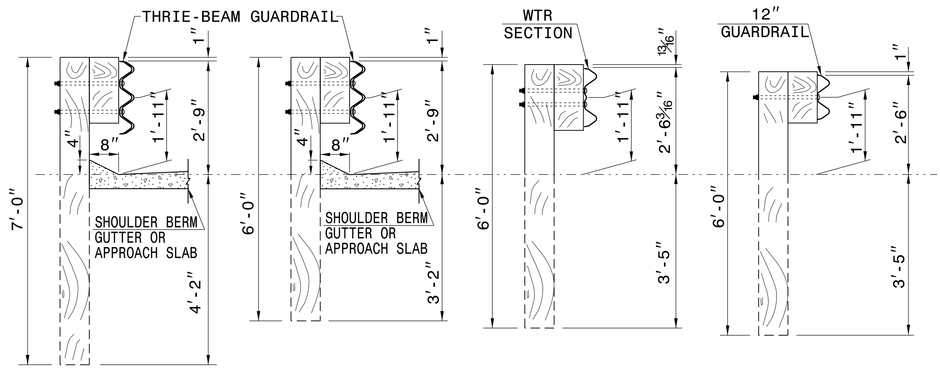

SECTION OF THRIE BEAM POSTS 1 THRU 6

SECTION OF THRIE BEAM POST 7

SECTION OF WTR BEAM POST 8

SECTION OF 'W' BEAM POST 9

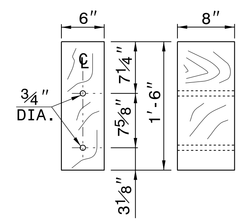

THRIE BEAM OFFSET BLOCK

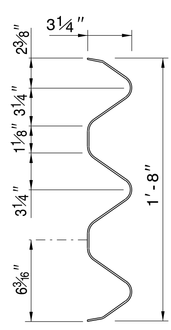

THRIE-BEAM SECTION

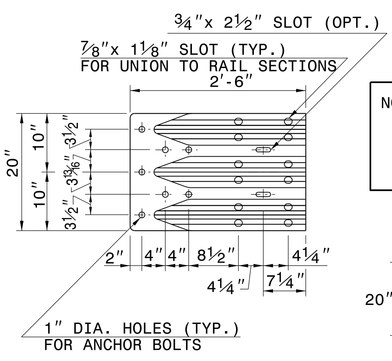

END SHOE

NOTE: THE MID POST AND OFFSET BLOCK OF THE WTR SECTION WILL REQUIRE SPECIAL BOLT HOLE DRILLING IN THE THRIE BEAM OFFSET BLOCK AND LINE POST.

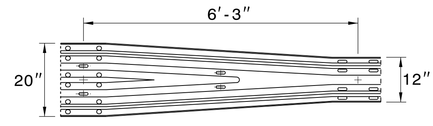

WTR SECTION
ELEVATION VIEW

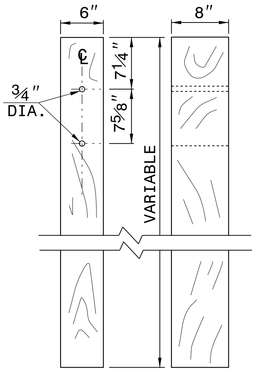

THRIE BEAM LINE POST

STATE OF
NORTH CAROLINA
DEPT. OF TRANSPORTATION
DIVISION OF HIGHWAYS
RALEIGH, N.C.

ENGLISH DETAIL DRAWING FOR
STRUCTURE ANCHOR UNITS
GUARDRAIL ANCHOR UNIT, TYPE III

SHEET 3 OF 7
862d03

CONTRACT STANDARDS AND DEVELOPMENT UNIT
Office 919-707-6950 FAX 919-250-4119

SEE TITLE BLOCK

ORIGINAL BY: J HOWERTON DATE: 06-22-12
MODIFIED BY: DATE:
CHECKED BY: DATE:
FILE SPEC.:

PROJECT REFERENCE NO.
17BP.7.R.101 - ROCKINGHAM 39

SHEET NO.
2-A

PROJECT REFERENCE	SHEET NO.
17BP.7.R.101 – ROCKINGHAM 39	3

"N" = DISTANCE FROM EDGE OF LANE TO FACE OF GUARDRAIL.
TOTAL SHOULDER WIDTH = DISTANCE FROM EDGE OF TRAVEL LANE TO SHOULDER BREAK POINT.
FLARE LENGTH = DISTANCE FROM LAST SECTION OF PARALLEL GUARDRAIL TO END OF GUARDRAIL.
W = TOTAL WIDTH OF FLARE FROM BEGINNING OF TAPER TO END OF GUARDRAIL.
G = GATING IMPACT ATTENUATOR TYPE 350
NG = NON–GATING IMPACT ATTENUATOR TYPE 350

GUARDRAIL SUMMARY

SURVEY LINE	BEG. STA.	END STA.	LOCATION	LENGTH			WARRANT POINT		"N" DIST. FROM E.O.L.	TOTAL SHOULDER WIDTH	FLARE LENGTH		W		ANCHORS									IMPACT ATTENUATOR TYPE 350			REMARKS
				STRAIGHT	SHOP CURVED	DOUBLE FACED	APPROACH END	TRAILING END			APPROACH END	TRAILING END	APPROACH END	TRAILING END	AT–1	GRAU 350	TYPE III							NO.	PERMITTED G	PERMITTED NG	
–L–	12+72.50	14+78.75	RT	206.25′			14+78.75 (BRIDGE)		6′	9′						1	1										
–L–	12+85.00	14+78.75	LT	193.75′				14+78.75 (BRIDGE)	6′	9′						1	1										
–L–	16+41.25	17+22.50	RT	81.25′				16+41.25 (BRIDGE)	6′	9′						1	1										
–L–	16+41.25	17+22.50	LT	81.25′			16+41.25 (BRIDGE)		6′	9′						1	1										
		SUBTOTAL		562.50′																							
		LESS ANCHOR DEDUCTIONS																									
		GRAU–350 4 x 50.00′ =		–200.00′																							
		TYPE III 4 x 18.75′ =		–75.00′																							
		TOTAL		287.50′												4	4										

SUB–REGIONAL & REGIONAL LIST OF PIPES, ENDWALLS, ETC. (FOR PIPES 48" & UNDER)

| STATION | LOCATION (LT, RT, OR CL) | STRUCTURE NO. FROM | STRUCTURE NO. TO | TOP ELEVATION | INVERT ELEVATION | INVERT ELEVATION | SLOPE CRITICAL | DRAINAGE PIPE (RCP, CSP, CAAP, HDPE, or PVC) SIZE 12" | 15" | 18" | 24" | 30" | 36" | 42" | 48" | DO NOT USE RCP | DO NOT USE PVC | DO NOT USE CAAP | DO NOT USE HDPE | C.S. PIPE SIZE 12" | 15" | 18" | 24" | 36" | 42" | 48" | R.C. PIPE (CLASS III) SIZE 15" | 18" | 24" | 30" | 36" | 42" | 48" | R.C. PIPE (CLASS IV) SIZE 12" | 15" | 18" | 24" | 30" | 36" | 42" | 48" | *** R. C. PIPE (CLASS V) | *** R. C. PIPE CULVERTS, CONTRACTOR DESIGN PIPE | *** R. C. PIPE CULVERTS, CONTRACTOR DESIGN PIPE | 15" SIDE DRAIN PIPE | 18" SIDE DRAIN PIPE | ENDWALLS STD. 838.01, STD. 838.11 OR STD. 838.80 (UNLESS NOTED OTHERWISE) R.C.P. | ENDWALLS CU. YDS. C.S.P. | QUANTITIES FOR DRAINAGE STRUCTURES PER EACH (0' THRU 5.0') | * TOTAL L.F. FOR PAY QUANTITY SHALL BE COL. 'A' + (1.3 X COL. 'B') LIN. FT. A 5.0' THRU 10.0' | LIN. FT. B 10.0' AND ABOVE | C.B. STD. 840.01 OR STD. 840.02 | FRAME, GRATES AND HOOD STANDARD 840.03 TYPE OF GRATE E | F | G | CONCRETE TRANSITIONAL SECTION CATCH BASIN | DROP INLET | G.D.I. FRAME WITH GRATE STD. 840.22 | G.D.I. FRAME WITH TWO GRATES STD. 840.22 | G.D.I. (N.S.) FRAME WITH GRATE STD. 840.24 | G.D.I. (N.S.) FRAME WITH TWO GRATES STD. 840.24 | G.D.I. (N.S.) FRAME WITH TWO GRATES STD. 840.29 | T.B.D.I. STD. 840.35 | CORR. STEEL ELBOWS NO. & SIZE | CONC. COLLARS CL. "B" C.Y. STD 840.72 | CONC. & BRICK PIPE PLUG, C.Y. STD. 840.71 | PIPE REMOVAL LIN.FT. | REMARKS |
|---|---|---|---|---|---|---|---|---|---|---|---|---|---|---|---|---|---|---

DocuSign Envelope ID: 8C0CC173-5919-4C42-A3E0-41D83EA3A04B

*DESIGN EXCEPTION:
MIN. HORIZONTAL CURVE RADIUS
HORIZONTAL SSD

DETAIL A
TOE PROTECTION
(Not to Scale)

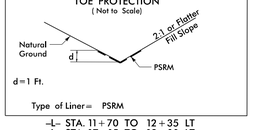

d=1 Ft.

Type of Liner= PSRM

-L- STA. 11+70 TO 12+35 LT
-L- STA. 17+15 TO 18+00 LT
-L- STA. 17+15 TO 18+30 RT

DETAIL B
ROADWAY CUT DITCH
(Not to Scale)

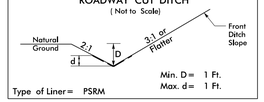

Min. D= 1 Ft.
Max. d= 1 Ft.

Type of Liner= PSRM

-L- STA. 18+00 TO 18+45 LT

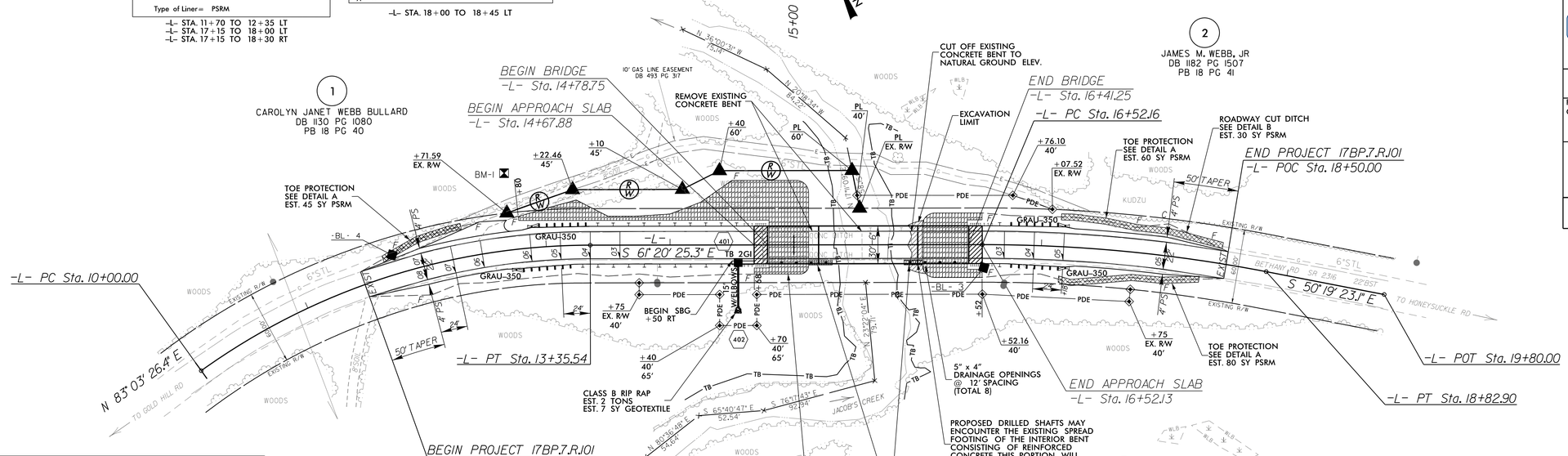

DATUM DESCRIPTION

THE LOCALIZED COORDINATE SYSTEM DEVELOPED FOR THIS PROJECT IS BASED ON THE STATE PLANE COORDINATES ESTABLISHED BY NCGS FOR MONUMENT "780039-2"
WITH NAD 83/NA 2011 STATE PLANE GRID COORDINATES OF
NORTHING: 946207.193(ft) EASTING: 1740064.190(ft)
ELEVATION: 624.76(ft)
THE AVERAGE COMBINED GRID FACTOR USED ON THIS PROJECT (GROUND TO GRID) IS: 1.0000304342
THE N.C. LAMBERT GRID BEARING AND LOCALIZED HORIZONTAL GROUND DISTANCE FROM "780039-2" TO -L- STATION 10+00.00 IS
N 62°00'21.5" W DISTANCE: 1,293.84 (ft)
ALL LINEAR DIMENSIONS ARE LOCALIZED HORIZONTAL DISTANCES
VERTICAL DATUM USED IS NAVD 88

BM1 ELEVATION = 605.24
N 946837 E 1739213
BL STATION 22+40.00 68 RIGHT
BM1

NOTE:
TYPE-III ANCHOR UNITS ON ALL FOUR BRIDGE CORNERS

-L-

PI Sta 11+73.39	PI Sta 17+67.89
Δ = 35° 36' 08.3" (RT)	Δ = 11° 01' 02.2" (RT)
D = 10° 36' 37.2"	D = 4° 46' 28.7"
L = 335.54'	L = 230.75'
T = 173.39'	T = 115.73'
R = 540.00'	R = 1,200.00'

BL

POINT	DESC.	NORTH	EAST	ELEVATION	BL STATION
1	780039-1	946753.0090	1740480.5150	685.82	5+00.00
2	780039-2	946207.1930	1740064.1900	624.76	11+86.47
3	BL-3	946583.5944	1739516.0034	605.00	18+51.44
4	BL-4	946822.2872	1739101.7726	610.40	23+29.52

PROJECT REFERENCE	SHEET NO.
17BP.7.R.101 – ROCKINGHAM 39	4

ROADWAY DESIGN ENGINEER
NORTH CAROLINA PROFESSIONAL SEAL 21102 ENGINEER TIMOTHY JORDAN
DocuSigned by:
5/24/2017
MOTT MACDONALD I & E, LLC
LICENSE NO. F-0669

HYDRAULICS ENGINEER
NORTH CAROLINA PROFESSIONAL SEAL 39732 ENGINEER KITCHEN FUHT
DocuSigned by:
5/24/2017
MOTT MACDONALD

DOCUMENT NOT CONSIDERED FINAL UNLESS ALL SIGNATURES COMPLETED

Prepared in the Office of:
MOTT MACDONALD
PO Box 700
Fuquay-Varina, NC 27526
www.mottmac.com

ICA Engineering
5121 Kingdom Way, Suite 100
Raleigh, NC 27607
NC License No: P-0258

VERTICAL SCALE 5' 0 5' 10'
HORIZONTAL SCALE 25' 0 25' 50'

DETAIL C
DECK DRAIN DISSIPATOR PAD
(Not to Scale)

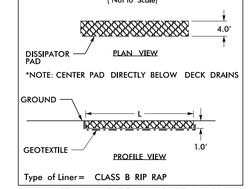

*NOTE: CENTER PAD DIRECTLY BELOW DECK DRAINS

Type of Liner= CLASS B RIP RAP

-L- STA. 15+12 TO 15+31 RT, L=19'
-L- STA. 15+89 TO 16+04 RT, L=15'

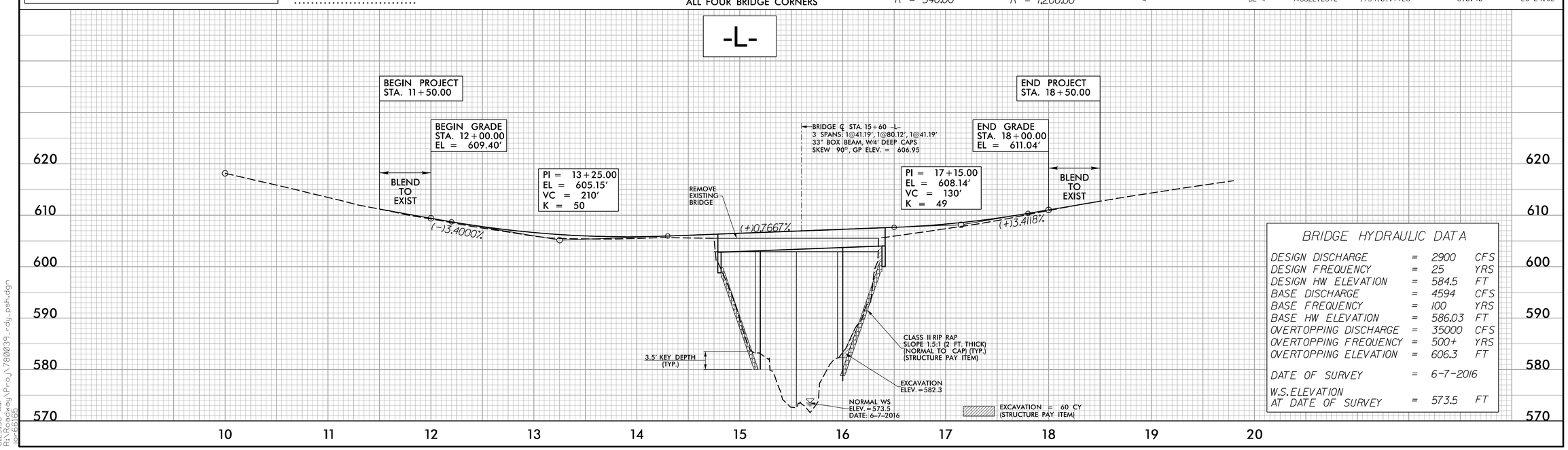

BRIDGE HYDRAULIC DATA

DESIGN DISCHARGE	=	2900	CFS
DESIGN FREQUENCY	=	25	YRS
DESIGN HW ELEVATION	=	584.5	FT
BASE DISCHARGE	=	4594	CFS
BASE FREQUENCY	=	100	YRS
BASE HW ELEVATION	=	586.03	FT
OVERTOPPING DISCHARGE	=	35000	CFS
OVERTOPPING FREQUENCY	=	500+	YRS
OVERTOPPING ELEVATION	=	606.3	FT
DATE OF SURVEY	=	6-7-2016	
W.S.ELEVATION AT DATE OF SURVEY	=	573.5	FT

5/24/2017
8:23:38 AM
R:\Roadway\Proj\780039_rdy_psh.dgn
lor6615

DocuSign Envelope ID: 185463C1-0E7D-4973-82B9-D9215C8660E3

PROJECT REFERENCE	SHEET NO.
17BP.7.R.101 – ROCKINGHAM 39	TMP–1

ROADWAY DESIGN ENGINEER

NORTH CAROLINA PROFESSIONAL SEAL 21102 JAMES TIMOTHY JOHNSON

DocuSigned by: James Timothy Johnson E.I.T.
5/24/2017

MOTT MACDONALD I & E, LLC
LICENSE NO. F–0669

DOCUMENT NOT CONSIDERED FINAL UNLESS ALL SIGNATURES COMPLETED

Prepared in the Office of:

MOTT MACDONALD
PO Box 700
Fuquay–Varina, NC 27526
www.mottmac.com

THE FOLLOWING ROADWAY STANDARDS AS APPEAR IN "ROADWAY STANDARD DRAWINGS" – HIGHWAY DESIGN BRANCH– N.C. DEPARTMENT OF TRANSPORTATION – RALEIGH, N.C., DATED JANUARY 2012 ARE APPLICABLE TO THIS PROJECT AND BY REFERENCE HEREBY ARE CONSIDERED A PART OF THESE PLANS:

STD.	TITLE
1101.03	TEMPORARY ROAD CLOSURES
1110.01	STATIONARY WORK ZONE SIGNS
1145.01	BARRICADES
1205.01	PAVEMENT MARKINGS – LINE TYPES AND OFFSETS
1205.02	PAVEMENT MARKINGS – TWO–LANE AND MULTI–LANE ROADWAYS
1205.12	PAVEMENT MARKINGS – BRIDGES
1261.01	GUARDRAIL AND BARRIER DELINEATORS – INSTALLATION SPACING
1261.02	GUARDRAIL AND BARRIER DELINEATORS – TYPES AND MOUNTING
1262.01	GUARDRAIL END DELINEATION

GENERAL NOTES

CHANGES MAY BE REQUIRED WHEN PHYSICAL DIMENSIONS IN THE DETAIL DRAWINGS, STANDARD DETAILS, AND ROADWAY DETAILS ARE NOT ATTAINABLE TO MEET FIELD CONDITIONS OR RESULT IN DUPLICATE OR UNDESIRED OVERLAPPING OF DEVICES. MODIFICATION MAY INCLUDE: MOVING, SUPPLEMENTING, COVERING, OR REMOVAL OF DEVICES AS DIRECTED BY THE ENGINEER.

THE FOLLOWING GENERAL NOTES APPLY AT ALL TIMES FOR THE DURATION OF THE CONSTRUCTION PROJECT EXCEPT WHEN OTHERWISE NOTED IN THE PLAN OR DIRECTED BY THE ENGINEER.

TRAFFIC PATTERN ALTERATIONS

A) NOTIFY THE ENGINEER TWENTY ONE (21) CALENDAR DAYS PRIOR TO ANY TRAFFIC PATTERN ALTERATION.

SIGNING

B) PROVIDE PERMANENT SIGNING.

C) PROVIDE SIGNING AND DEVICES REQUIRED TO CLOSE THE ROAD ACCORDING TO THE ROADWAY STANDARD DRAWINGS AND TRAFFIC CONTROL PLANS.

PROVIDE SIGNING REQUIRED FOR THE OFF–SITE DETOUR ROUTE AS SHOWN IN THE TRAFFIC CONTROL PLANS.

D) COVER OR REMOVE ALL SIGNS AND DEVICES REQUIRED TO CLOSE THE ROAD WHEN ROAD CLOSURE IS NOT IN OPERATION.

COVER OR REMOVE ALL SIGNS REQUIRED FOR THE OFF–SITE DETOUR WHEN THE DETOUR IS NOT IN OPERATION.

E) ENSURE ALL NECESSARY SIGNING IS IN PLACE PRIOR TO ALTERING ANY TRAFFIC PATTERN.

TRAFFIC CONTROL DEVICES

F) PLACE TYPE III BARRICADES, WITH "ROAD CLOSED" SIGN R11–2 ATTACHED, OF SUFFICIENT LENGTH TO CLOSE ENTIRE ROADWAY.

PAVEMENT MARKINGS AND MARKERS

G) INSTALL PAVEMENT MARKINGS ON THE FINAL SURFACE.

PHASING

STEP 1: USING ROADWAY STANDARD DRAWING NUMBER 1101.03, SHEET 1 OF 9, AND SHEET TMP–2, PERFORM THE FOLLOWING:
– INSTALL ALL ROAD CLOSURE AND DETOUR SIGNING INCLUDING BARRICADES
– CLOSE SR 2316 (BETHANY ROAD)
– PLACE TRAFFIC ONTO OFF– SITE DETOUR

STEP 2: REMOVE EXISTING BRIDGE #39 AND CONSTRUCT THE PROPOSED BRIDGE AND APPROACHES AS SHOWN IN THE CONSTRUCTION PLANS.

STEP 3: INSTALL FINAL PAVEMENT MARKINGS.

STEP 4: REMOVE ALL TRAFFIC CONTROL SIGNING AND DEVICES AND RE–OPEN SR 2316 (BETHANY ROAD) TO THE FINAL TRAFFIC PATTERN.

PAVEMENT MARKING

PAINT WHITE EDGELINE (4")	2,800 LF
PAINT YELLOW DOUBLE CENTER (4")	2,800 LF

NOTE: QUANTITY INCLUDES 2 APPLICATIONS OF EACH

jor66165
R:\Roadway\Proj\7800039_rdy_tmp.dgn
5/24/2017 8:23:41 AM

DocuSign Envelope ID: 185463C1-0E7D-4973-82B9-D9215C8660E3

PROJECT REFERENCE	SHEET NO.
17BP.7.R.101 – ROCKINGHAM 39	TMP–2

ROADWAY DESIGN ENGINEER

NORTH CAROLINA PROFESSIONAL SEAL 21102 ENGINEER

Digitally signed by JAMES TIMOTHY MALONEY
5/24/2017

MOTT MACDONALD I & E, LLC
LICENSE NO. F–0669

DOCUMENT NOT CONSIDERED FINAL UNLESS ALL SIGNATURES COMPLETED

Prepared in the Office of:

MOTT MACDONALD
PO Box 700
Fuquay–Varina, NC 27526
www.mottmac.com

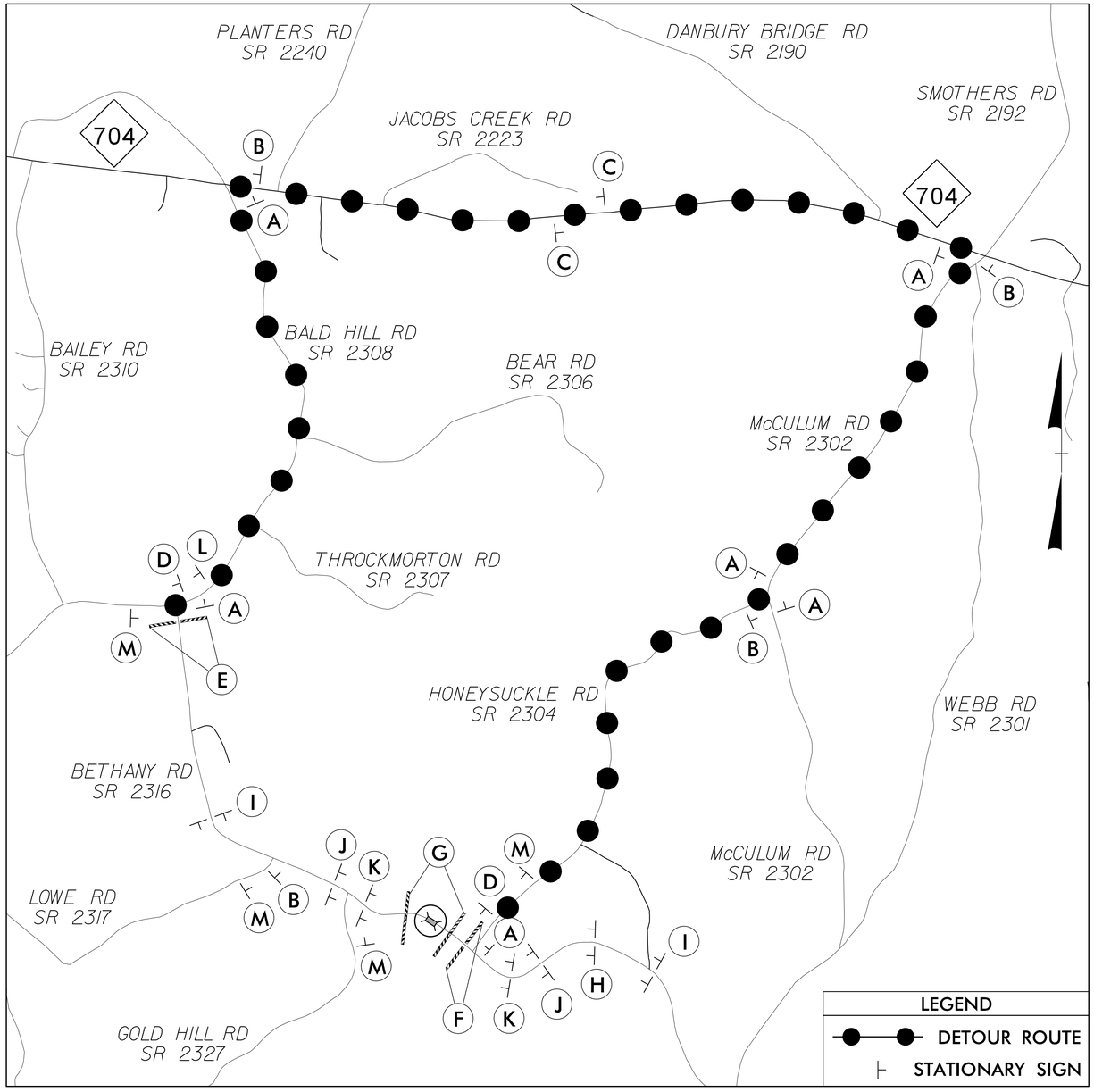

✱ SEE SHEET TMP–3 FOR SPECIAL SIGN DESIGNS

✱ BETHANY ROAD / DETOUR — M4–8 24″ X 12″ — M6–1 R 21″ X 15″ — (A)

✱ BETHANY ROAD / DETOUR — M4–8 24″ X 12″ — M6–1 L 21″ X 15″ — (B)

✱ BETHANY ROAD / DETOUR — M4–8 24″ X 12″ — M6–3 21″ X 15″ — (C)

END DETOUR — M4–8 A 24″ X 18″ — (D)

R11-4 60″ x 30″ — ROAD CLOSED TO THRU TRAFFIC / DETOUR — M4-10L 48″ x 18″ — TYPE III BARRICADE — (E)

R11-4 60″ x 30″ — ROAD CLOSED TO THRU TRAFFIC / DETOUR — M4-10R 48″ x 18″ — TYPE III BARRICADE — (F)

R11-2 48″ x 30″ — ROAD CLOSED — TYPE III BARRICADE(S) — (G)

DETOUR AHEAD — W20–2 48″ X 48″ — (H)

ROAD CLOSED AHEAD — W20–3 48″ X 48″ — (I)

ROAD CLOSED 1000 FT — W20–3 48″ X 48″ — (J)

ROAD CLOSED 500 FT — W20–3 48″ X 48″ — (K)

ROAD CLOSED AHEAD / NEXT LEFT — W20–3 48″ X 48″ — SP–4L 42″ X 12″ — (L)

ROAD CLOSED AHEAD / NEXT RIGHT — W20–3 48″ X 48″ — SP–4R 42″ X 12″ — (M)

jor66165
R:\Roadway\Proj\7800039_rdy_tmp.dgn
5/24/2017 8:23:41 AM

DocuSign Envelope ID: 9C5D0140-A422-4AE1-8248-0101B6AA7232

PROJECT REFERENCE	SHEET NO.
17BP.7.R.101 – ROCKINGHAM 39	TMP–3

TRAFFIC ENGINEER

NORTH CAROLINA PROFESSIONAL SEAL 023488 ENGINEER

Docusigned by: Nathan K. Phillips 5/30/2017

MOTT MACDONALD I & E, LLC
LICENSE NO. F-0669

DOCUMENT NOT CONSIDERED FINAL UNLESS ALL SIGNATURES COMPLETED

Prepared in the Office of:

MOTT MACDONALD
PO Box 700
Fuquay-Varina, NC 27526
www.mottmac.com

SIGN NUMBER: SD-1
TYPE: D
QUANTITY: SEE PLANS

SIGN WIDTH: 3′-6″
HEIGHT: 2′-6″
TOTAL AREA: 8.8 Sq.Ft.

BORDER TYPE: INSET
RECESS: 0.38″
WIDTH: 0.5″
RADII: 1.5″

NO. Z BARS:
LENGTH:

BACKG COLOR: Fluorescent Orange
COPY COLOR: Black

SYMBOL	X	Y	WID	HT

MAT'L: 0.080″ (2.0 mm) ALUMINUM

DESIGN BY: PJ
PROJECT ID: 17BP.7.R.101

CHECKED BY: NKP
DIV: 7

DATE: Oct 20, 2015

USE NOTES: 1,2

1. Legend and border shall be direct applied black non-reflective sheeting.
2. Background shall be NC GRADE B fluoresent orange retroreflective sheeting.

BORDER
R=1.5″
TH=0.5″
IN=0.38″

Spacing Factor is 1 unless specified otherwise

LETTER POSITIONS

Letter locations are panel edge to lower left corner

	B	E	T	H	A	N	Y	Series/Size Text Length
	6.6	11	14.6	18.5	22.7	27.4	31.6	C 2000 28.8
	R	O	A	D				C 2000
	12.7	17	21.2	25.9				16.6

FILENAME: 780039_rdy_tmp3

NORTH CAROLINA D.O.T. SIGN DETAIL

jor66165
R:\Roadway\Proj\780039_rdy_tmp3.dgn
5/24/2017 8:23:44 AM

TIP PROJECT: 17BP.7.R.101

STATE	STATE PROJECT REFERENCE NO.	SHEET NO.	TOTAL SHEETS
N.C.	17BP.7.R.101	EC-1	

STATE PROJ. NO.	F.A. PROJ. NO.	DESCRIPTION

STATE OF NORTH CAROLINA
DIVISION OF HIGHWAYS

PLAN FOR PROPOSED
HIGHWAY EROSION CONTROL

ROCKINGHAM COUNTY

LOCATION: BRIDGE NO. 39 OVER JACOBS CREEK ON SR 2316 (BETHANY ROAD)
TYPE OF WORK: GRADING, PAVING, DRAINAGE AND STRUCTURE

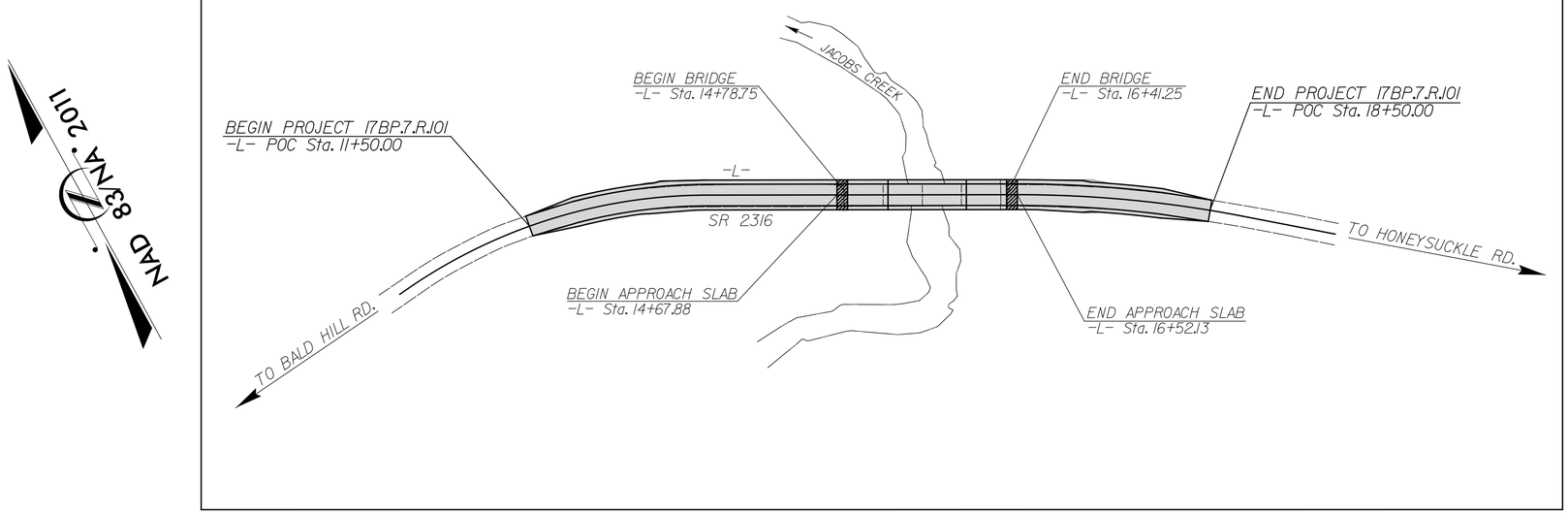

EROSION AND SEDIMENT CONTROL MEASURES

Std. #	Description	Symbol
1630.03	Temporary Silt Ditch	TSD
1630.05	Temporary Diversion	TD
1605.01	Temporary Silt Fence	
1606.01	Special Sediment Control Fence	
1622.01	Temporary Berms and Slope Drains	
1630.02	Silt Basin Type B	
1633.01	Temporary Rock Silt Check Type-A	
	Temporary Rock Silt Check Type-A with Matting and Polyacrylamide (PAM)	
1633.02	Temporary Rock Silt Check Type-B	
	Wattle/ Coir Fiber Wattle	EW CFW
	Wattle/ Coir Fiber Wattle with Polyacrylamide (PAM)	
1634.01	Temporary Rock Sediment Dam Type-A	
1634.02	Temporary Rock Sediment Dam Type-B	
1635.01	Rock Pipe Inlet Sediment Trap Type-A	
1635.02	Rock Pipe Inlet Sediment Trap Type-B	
1630.04	Stilling Basin	
1630.06	Special Stilling Basin	
	Rock Inlet Sediment Trap:	
1632.01	Type A	A
1632.02	Type B	B
1632.03	Type C	C
	Skimmer Basin	
	Tiered Skimmer Basin	
	Infiltration Basin	

THIS PROJECT CONTAINS EROSION CONTROL PLANS FOR CLEARING AND GRUBBING PHASE OF CONSTRUCTION.

GRAPHIC SCALE

50
PLANS

50
PROFILE (HORIZONTAL)

10
PROFILE (VERTICAL)

THESE EROSION AND SEDIMENT CONTROL PLANS COMPLY WITH THE REGULATIONS SET FORTH BY THE NCG-010000 GENERAL CONSTRUCTION PERMIT EFFECTIVE AUGUST 1, 2016 AND ISSUED BY THE NORTH CAROLINA DEPARTMENT OF ENVIRONMENT AND NATURAL RESOURCES DIVISION OF WATER RESOURCES.

Prepared In the Office of:

ICA ENGINEERING

5121 KINGDOM WAY, SUITE 100
RALEIGH NC 27607
NC License No. F-0258

Designed by:

STACEY H. BAILEY, PE ***3074***
NAME *LEVEL III CERTIFICATION NO.*

Reviewed In the Office of:

ROADSIDE ENVIRONMENTAL UNIT

1 South Wilmington St.
Raleigh, NC 27611

2012 STANDARD SPECIFICATIONS

Reviewed by:

JENNIFER PARISH, EI

Roadway Standard Drawings

The following roadway <u>english</u> standards as appear in "Roadway Standard Drawings"– Roadway Design Unit – N. C. Department of Transportation – Raleigh, N. C., dated January 2012 and the latest revison thereto are applicable to this project and by reference hereby are considered a part of these plans.

1604.01	Railroad Erosion Control Detail	1632.01	Rock Inlet Sediment Trap Type A
1605.01	Temporary Silt Fence	1632.02	Rock Inlet Sediment Trap Type B
1606.01	Special Sediment Control Fence	1632.03	Rock Inlet Sediment Trap Type C
1607.01	Gravel Construction Entrance	1633.01	Temporary Rock Silt Check Type A
1622.01	Temporary Berms and Slope Drains	1633.02	Temporary Rock Silt Check Type B
1630.01	Riser Basin	1634.01	Temporary Rock Sediment Dam Type A
1630.02	Silt Basin Type B	1634.02	Temporary Rock Sediment Dam Type B
1630.03	Temporary Silt Ditch	1635.01	Rock Pipe Inlet Sediment Trap Type A
1630.04	Stilling Basin	1635.02	Rock Pipe Inlet Sediment Trap Type B
1630.05	Temporary Diversion	1640.01	Coir Fiber Baffle
1630.06	Special Stilling Basin	1645.01	Temporary Stream Crossing
1631.01	Matting Installation		

5/24/2017
ICA ENGINEERING, INC.
drainage/EROSION CONTROL PLANS/ca ady\780039_hyd_erosion_tsh.dgn

PROJECT REFERENCE NO.	SHEET NO.
17BP.7.RJ01	EC-2

TEMPORARY ROCK SILT CHECK TYPE 'A' WITH EXCELSIOR MATTING AND POLYACRYLAMIDE (PAM)

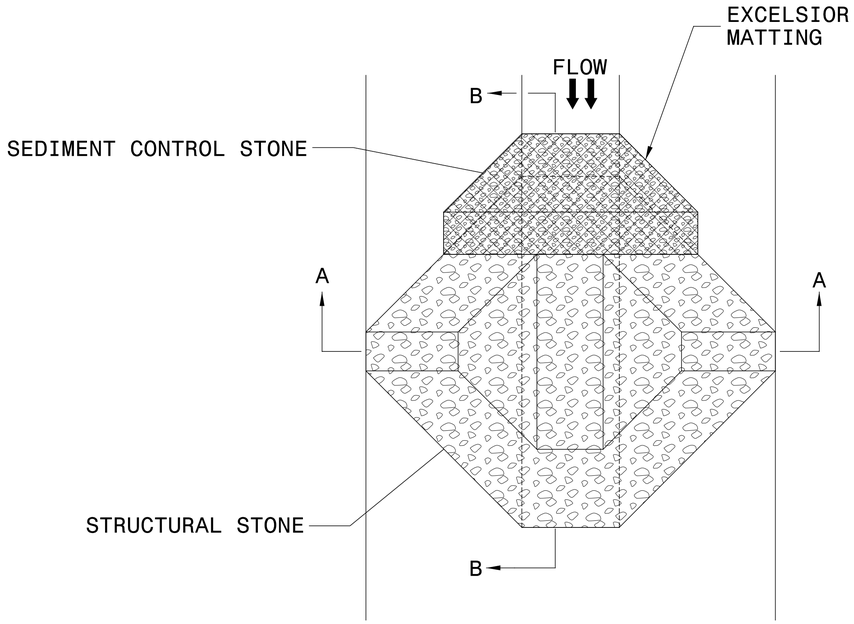

PLAN

NOTES:

INSTALL TEMPORARY ROCK SILT CHECK TYPE A IN ACCORDANCE WITH ROADWAY STANDARD DRAWING NO. 1633.01.

USE EXCELSIOR FOR MATTING MATERIAL AND ANCHOR MATTING SECTION AT TOP AND BOTTOM WITH CLASS B STONE.

PRIOR TO POLYACRYLAMIDE (PAM) APPLICATION, OBTAIN A SOIL SAMPLE FROM PROJECT LOCATION, AND FROM OFFSITE MATERIAL, AND ANALYZE FOR APPROPRIATE PAM FLOCCULANT TO BE APPLIED TO EACH ROCK SILT CHECK.

INITIALLY APPLY 4 OUNCES OF POLYACRYLAMIDE (PAM) TO TOP OF MATTING SECTION AND AFTER EVERY RAINFALL EVENT THAT EQUALS OR EXCEEDS 0.50 INCHES.

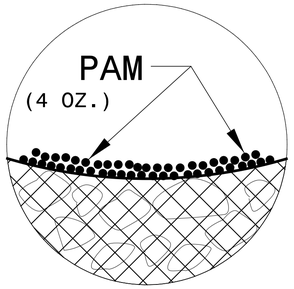

INSET A

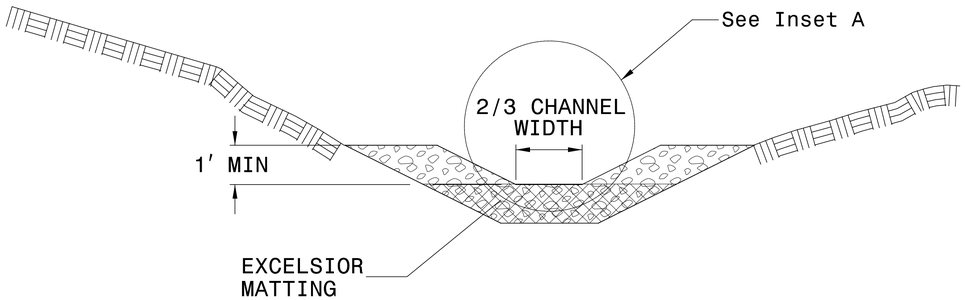

SECTION A-A

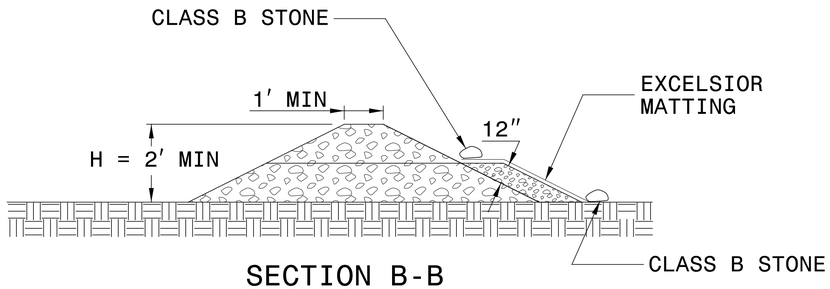

SECTION B-B

NOT TO SCALE

PROJECT REFERENCE NO.	SHEET NO.
17BP.7.R.101	EC-3

DIVISION OF HIGHWAYS
STATE OF NORTH CAROLINA

SOIL STABILIZATION TIMEFRAMES

SITE DESCRIPTION	STABILIZATION TIME	TIMEFRAME EXCEPTIONS
PERIMETER DIKES, SWALES, DITCHES AND SLOPES	7 DAYS	NONE
HIGH QUALITY WATER (HQW) ZONES	7 DAYS	NONE
SLOPES STEEPER THAN 3:1	7 DAYS	IF SLOPES ARE 10' OR LESS IN LENGTH AND ARE NOT STEEPER THAN 2:1, 14 DAYS ARE ALLOWED.
SLOPES 3:1 OR FLATTER	14 DAYS	7 DAYS FOR SLOPES GREATER THAN 50' IN LENGTH.
ALL OTHER AREAS WITH SLOPES FLATTER THAN 4:1	14 DAYS	NONE, EXCEPT FOR PERIMETERS AND HQW ZONES.

PROJECT REFERENCE	SHEET NO.
17BP.7.R.101 – ROCKINGHAM 39	EC-04/CONST.04

ROADSIDE ENVIRONMENTAL PROJECT ENGINEER

LEVEL III CERTIFIED BY:
STACEY H. BAILEY, PE
CERTIFICATION NUMBER: 3074
ISSUED: JANUARY 12, 2017

ICA Engineering
5121 Kingdom Way, Suite 100
Raleigh, NC 27607
NC License No: P0208

CLEARING AND GRUBBING
EROSION CONTROL FOR
CONSTRUCTION SHEET 4

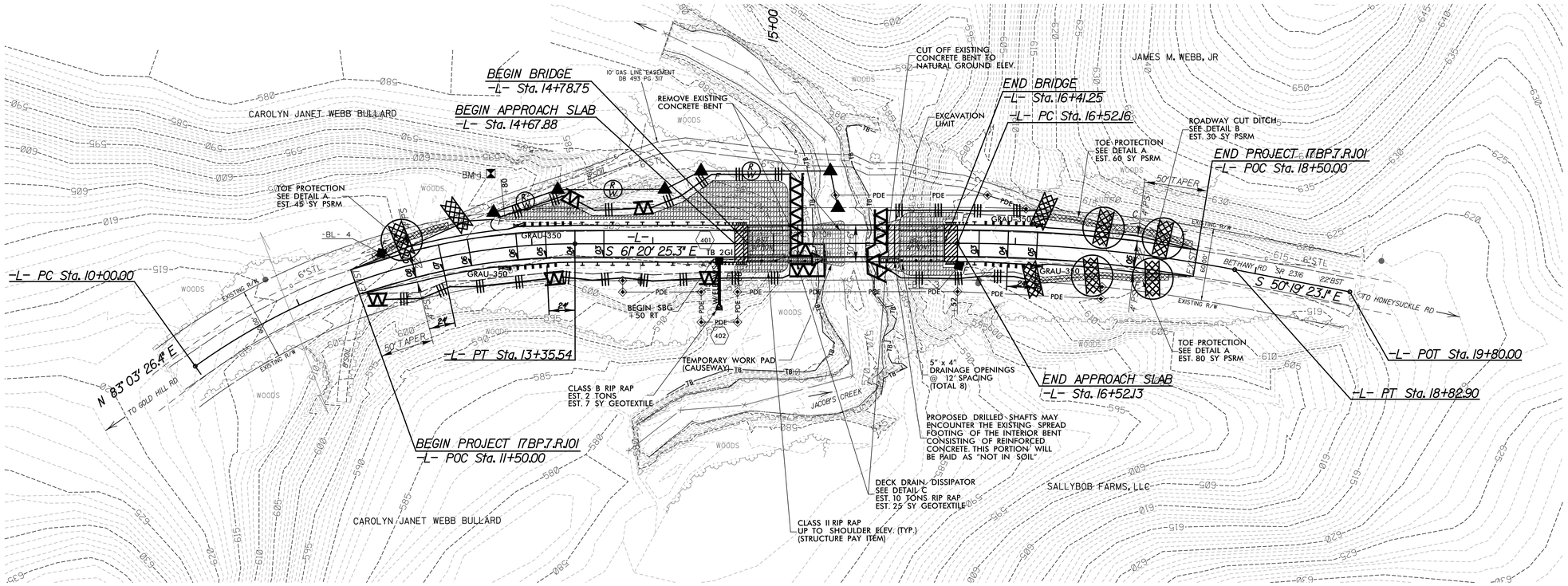

NOTE:
TYPE-III ANCHOR UNITS ON
ALL FOUR BRIDGE CORNERS

NOTE:
PLACE TEMPORARY ROCK SEDIMENT DAMS TYPE – B AND TEMPORARY ROCK SILT CHECKS TYPE – A AT DRAINAGE OUTLETS.

NOTE:
PERIMETER EROSION CONTROL MEASURES SHALL BE INSTALLED DURING CLEARING AND GRUBBING PHASE.

NOTE:
ALL EROSION CONTROL DEVICES SHOWN ARE LOCATED WITHIN EXISTING R/W OR EASEMENT.

ICA ENGINEERING, INC.
R:\Hydraulics\Erosion Control\cadd\780039_hyd_erosion_c&g_psh04.dgn
5/24/2017
$$DATE$$

PROJECT REFERENCE	SHEET NO.
17BP.7.R.101 – ROCKINGHAM 39	EC-05/CONST.04
ROADSIDE ENVIRONMENTAL PROJECT ENGINEER	

LEVEL III CERTIFIED BY:
STACEY H. BAILEY, PE
CERTIFICATION NUMBER: 3074
ISSUED: JANUARY 12, 2017

ICA Engineering
5121 Kingdom Way, Suite 100
Raleigh, NC 27607
NC License No: P0258

FINAL EROSION CONTROL
FOR CONSTRUCTION
SHEET 4

DETAIL A
TOE PROTECTION
(Not to Scale)

d = 1 Ft.

Type of Liner = PSRM

-L- STA. 11+70 TO 12+35 LT
-L- STA. 17+15 TO 18+00 LT
-L- STA. 17+15 TO 18+30 RT

DETAIL B
ROADWAY CUT DITCH
(Not to Scale)

Min. D = 1 Ft.
Max. d = 1 Ft.

Type of Liner = PSRM

-L- STA. 18+00 TO 18+45 LT

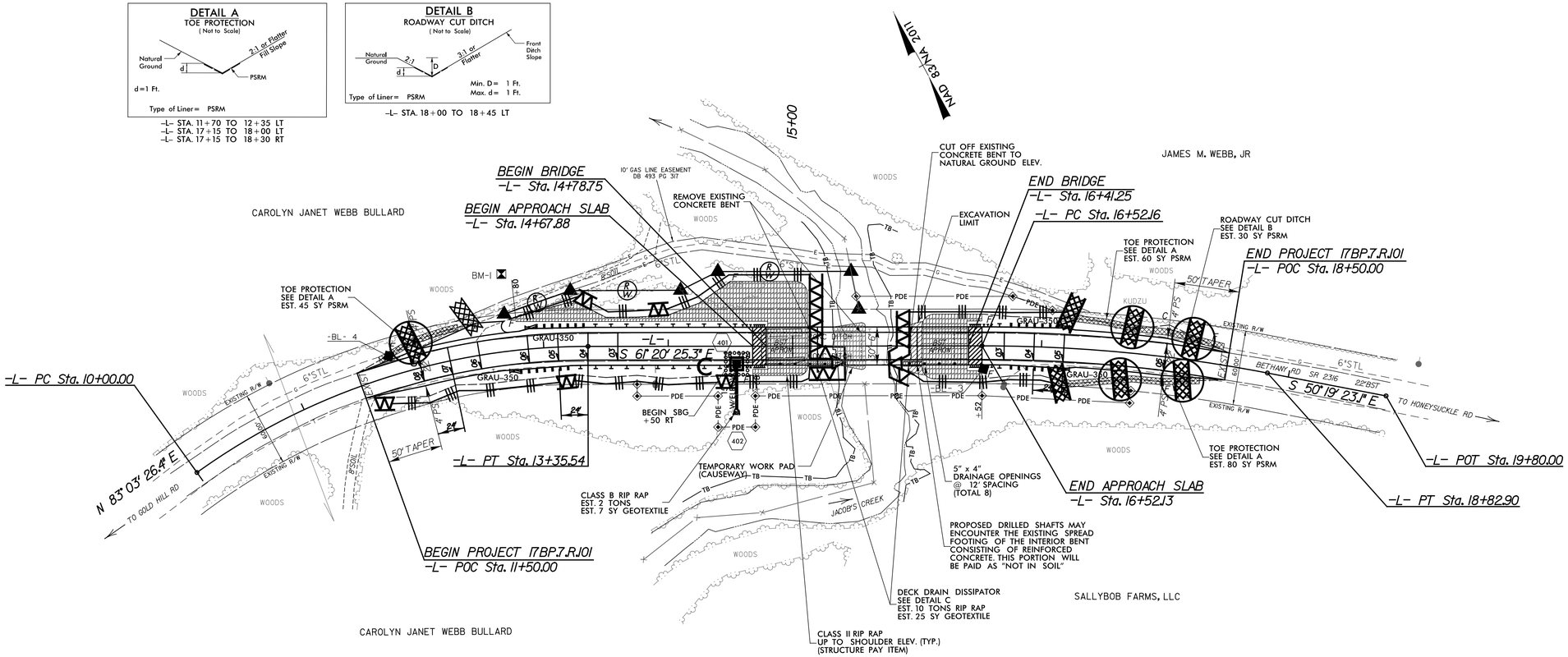

DETAIL C
DECK DRAIN DISSIPATOR PAD
(Not to Scale)

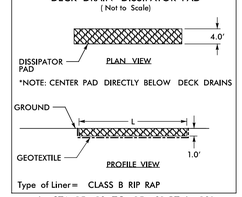

*NOTE: CENTER PAD DIRECTLY BELOW DECK DRAINS

Type of Liner = CLASS B RIP RAP

-L- STA. 15+12 TO 15+31 RT, L=19'
-L- STA. 15+89 TO 16+04 RT, L=15'

NOTE:
TYPE-III ANCHOR UNITS ON
ALL FOUR BRIDGE CORNERS

ICA ENGINEERING, INC.
R:\Hydraulics\Erosion Control\cadd\780039_hyd_erosion_final_psh04.dgn
5/24/2017
$$DATE$$

*DESIGN EXCEPTION:
MINIMUM HORIZONTAL CURVE RADIUS
HORIZONTAL SSD

DETAIL A
TOE PROTECTION
(Not to Scale)

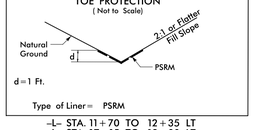

d = 1 Ft.

Type of Liner = PSRM

-L- STA. 11+70 TO 12+35 LT
-L- STA. 17+15 TO 18+00 LT
-L- STA. 17+15 TO 18+30 RT

DETAIL B
ROADWAY CUT DITCH
(Not to Scale)

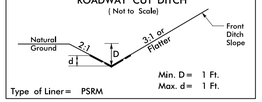

Min. D = 1 Ft.
Max. d = 1 Ft.

Type of Liner = PSRM

-L- STA. 18+00 TO 18+45 LT

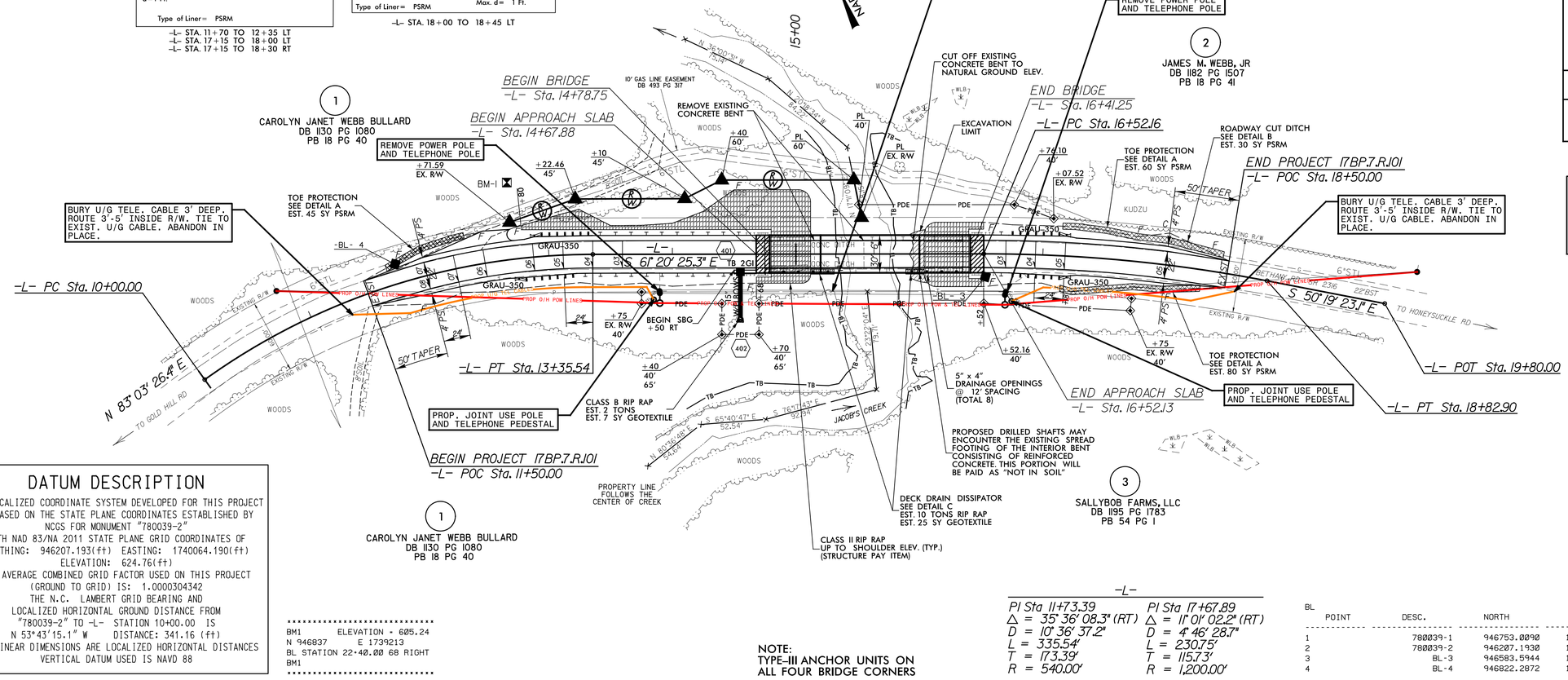

DETAIL C
DECK DRAIN DISSIPATOR PAD
(Not to Scale)

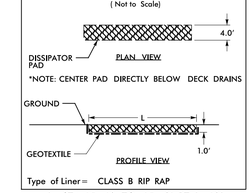

Type of Liner = CLASS B RIP RAP

-L- STA. 15+12 TO 15+31 RT, L=19'
-L- STA. 15+89 TO 16+04 RT, L=15'

DATUM DESCRIPTION

THE LOCALIZED COORDINATE SYSTEM DEVELOPED FOR THIS PROJECT IS BASED ON THE STATE PLANE COORDINATES ESTABLISHED BY NCGS FOR MONUMENT "780039-2"
WITH NAD 83/NA 2011 STATE PLANE GRID COORDINATES OF
NORTHING: 946207.193(ft) EASTING: 1740064.190(ft)
ELEVATION: 624.76(ft)
THE AVERAGE COMBINED GRID FACTOR USED ON THIS PROJECT (GROUND TO GRID) IS: 1.0000304342
THE N.C. LAMBERT GRID BEARING AND LOCALIZED HORIZONTAL GROUND DISTANCE FROM "780039-2" TO -L- STATION 10+00.00 IS
N 53°43'15.1" W DISTANCE: 341.16 (ft)
ALL LINEAR DIMENSIONS ARE LOCALIZED HORIZONTAL DISTANCES
VERTICAL DATUM USED IS NAVD 88

****
BM1 ELEVATION - 605.24
N 946837 E 1739213
BL STATION 22+40.00 68 RIGHT
BM1
****

NOTE:
TYPE-III ANCHOR UNITS ON ALL FOUR BRIDGE CORNERS

-L-

PI Sta 11+73.39	PI Sta 17+67.89
Δ = 35° 36' 08.3" (RT)	Δ = 11° 01' 02.2" (RT)
D = 10° 36' 37.2"	D = 4° 46' 28.7"
L = 335.54'	L = 230.75'
T = 173.39'	T = 115.73'
R = 540.00'	R = 1,200.00'

BL

POINT	DESC.	NORTH	EAST	ELEVATION	BL STATION
1	780039-1	946753.0090	1740480.5150	685.82	5+00.00
2	780039-2	946207.1930	1740064.1900	624.76	11+86.47
3	BL-3	946583.5944	1739516.0034	605.00	18+51.44
4	BL-4	946822.2872	1739101.7726	610.40	23+29.52

PROJECT REFERENCE	SHEET NO.
17BP.7.R.101 - ROCKINGHAM 39	UO-1

Prepared in the Office of:

THE WOOTEN COMPANY
120 North Boylan Avenue Raleigh NC 27603-1423
919.828.0531 fax 919.834.3589
License Number: F-0115

DOCUMENT NOT CONSIDERED FINAL UNLESS ALL SIGNATURES COMPLETED

GRAPHIC SCALE
25' 0 25' 50'

UTILITIES BY OTHERS

NOTE:
ALL PROPOSED UTILITY WORK SHOWN ON THIS SHEET WILL BE DONE BY OTHERS

$$DATE$$ $$SYSTIME$$ $$DGN$$ $$USERNAME$$

0 5 10	PROJECT REFERENCE	SHEET NO.
	17BP.7.R.101 – ROCKINGHAM 39	X-1

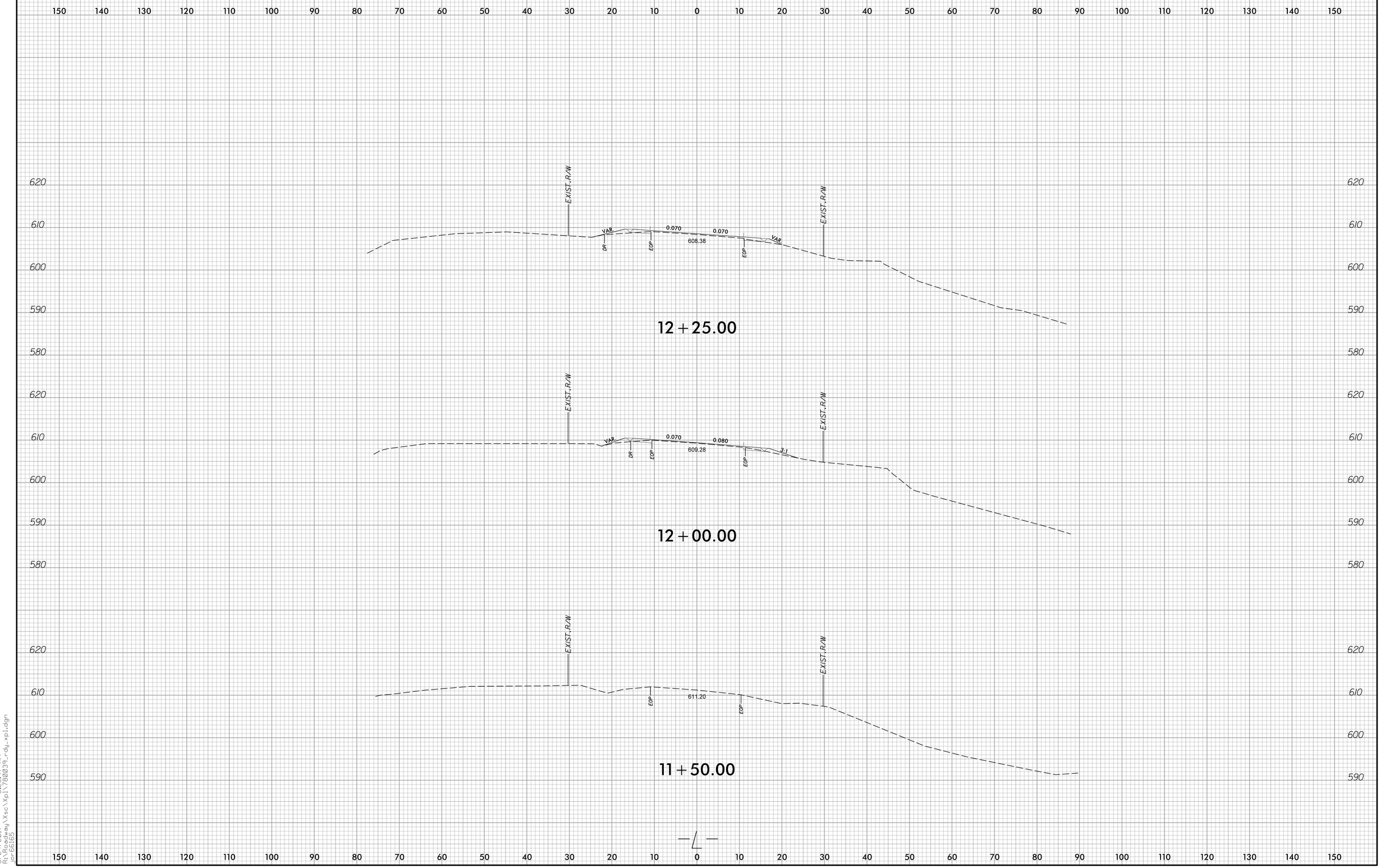

5/24/2017 8:23:47 AM
R:\Roadway\Xsc\Xpl\7800039_rdy_xpl.dgn
jor-66165

0 5 10	PROJECT REFERENCE	SHEET NO.
	17BP.7.R.101 – ROCKINGHAM 39	X-2

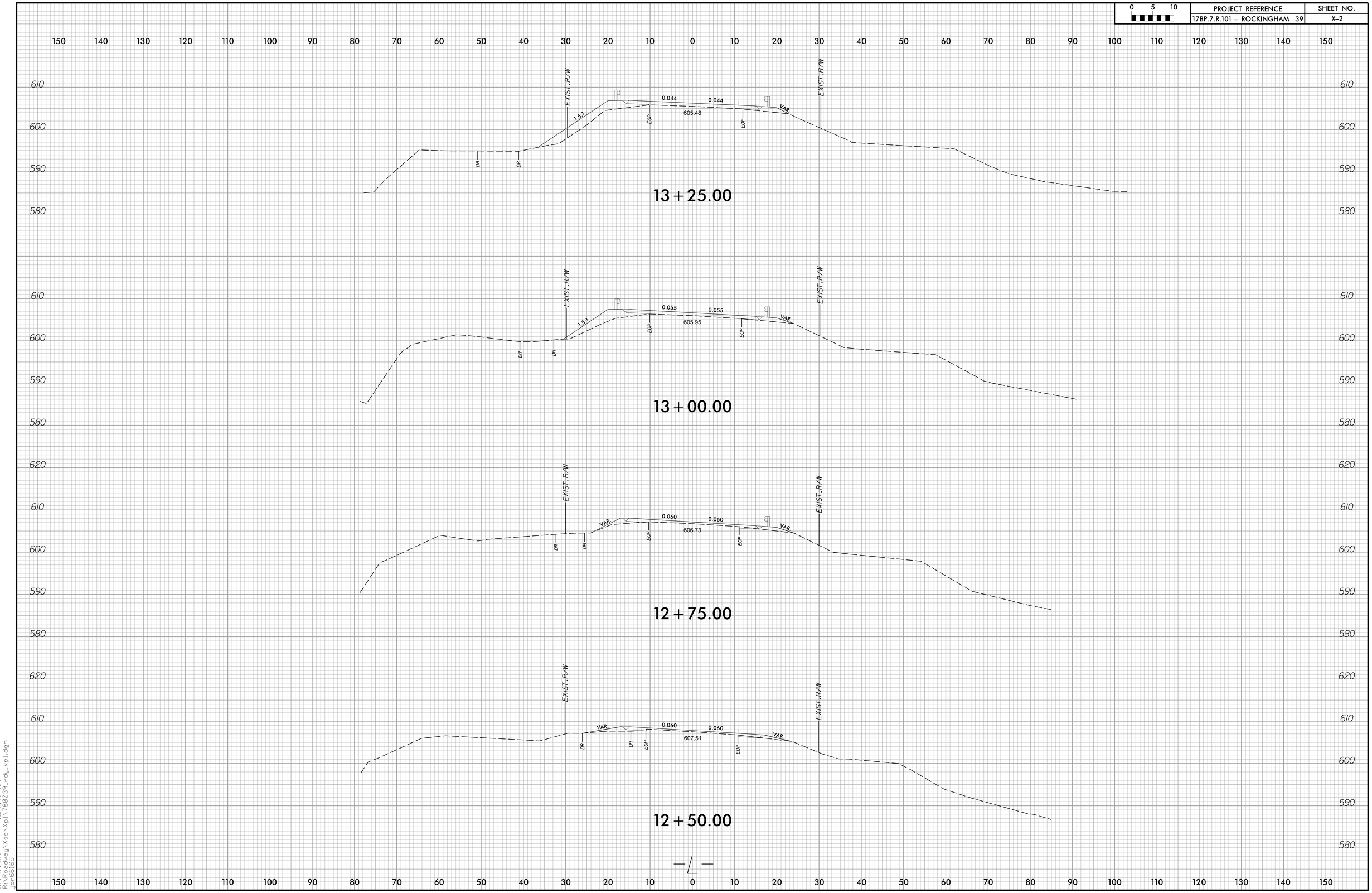

5/24/2017 8:23:47 AM
R:\Roadway\Xsc\Xpl\7800039_rdy_xpl.dgn
jor6616S

0 5 10	PROJECT REFERENCE	SHEET NO.
	17BP.7.R.101 – ROCKINGHAM 39	X-3

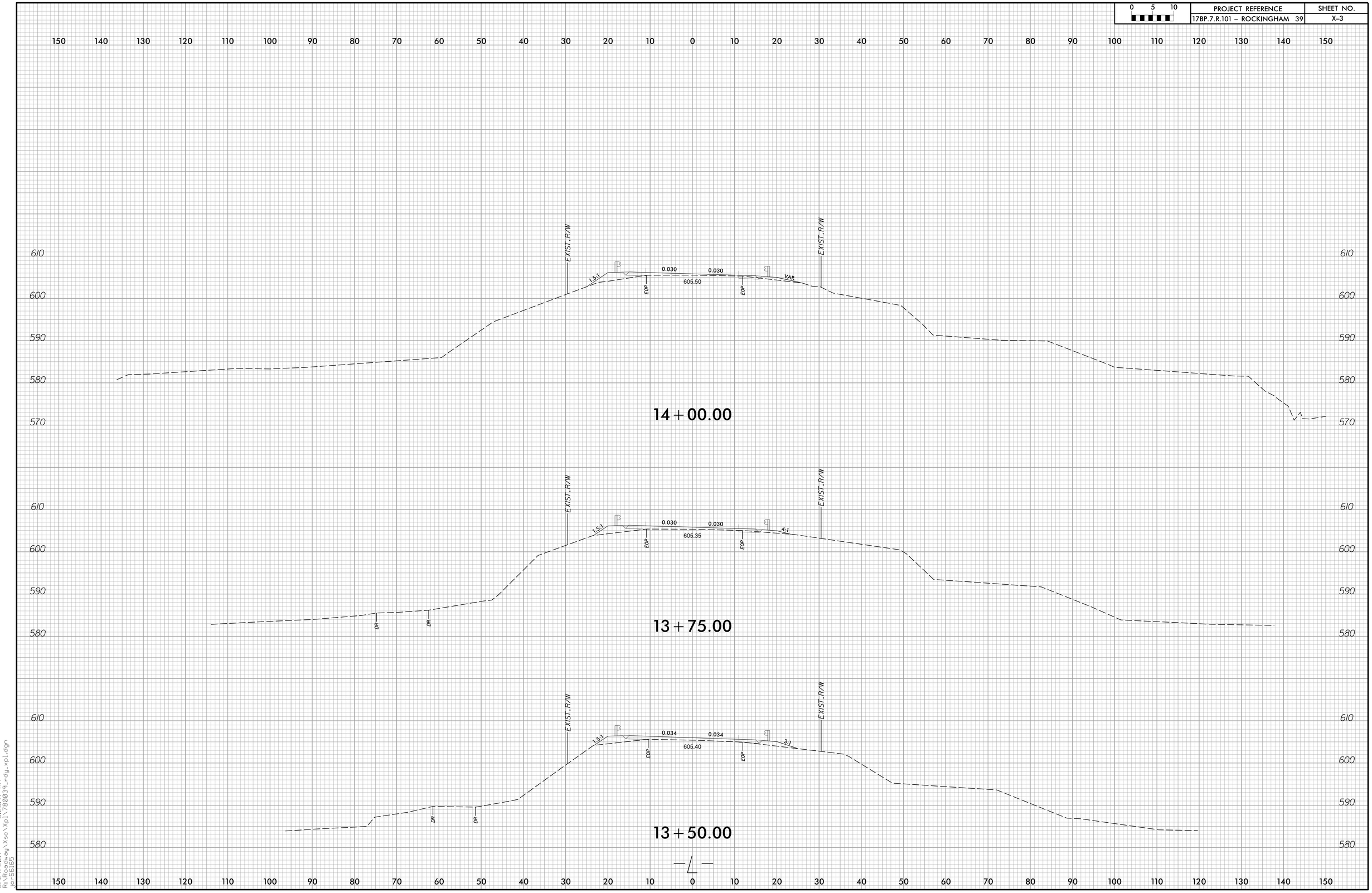

5/24/2017 8:23:47 AM
R:\Roadway\Xsc\Xpl\7800039_rdy_xpl.dgn
jor6165

0 5 10	PROJECT REFERENCE	SHEET NO.
	17BP.7.R.101 – ROCKINGHAM 39	X-4

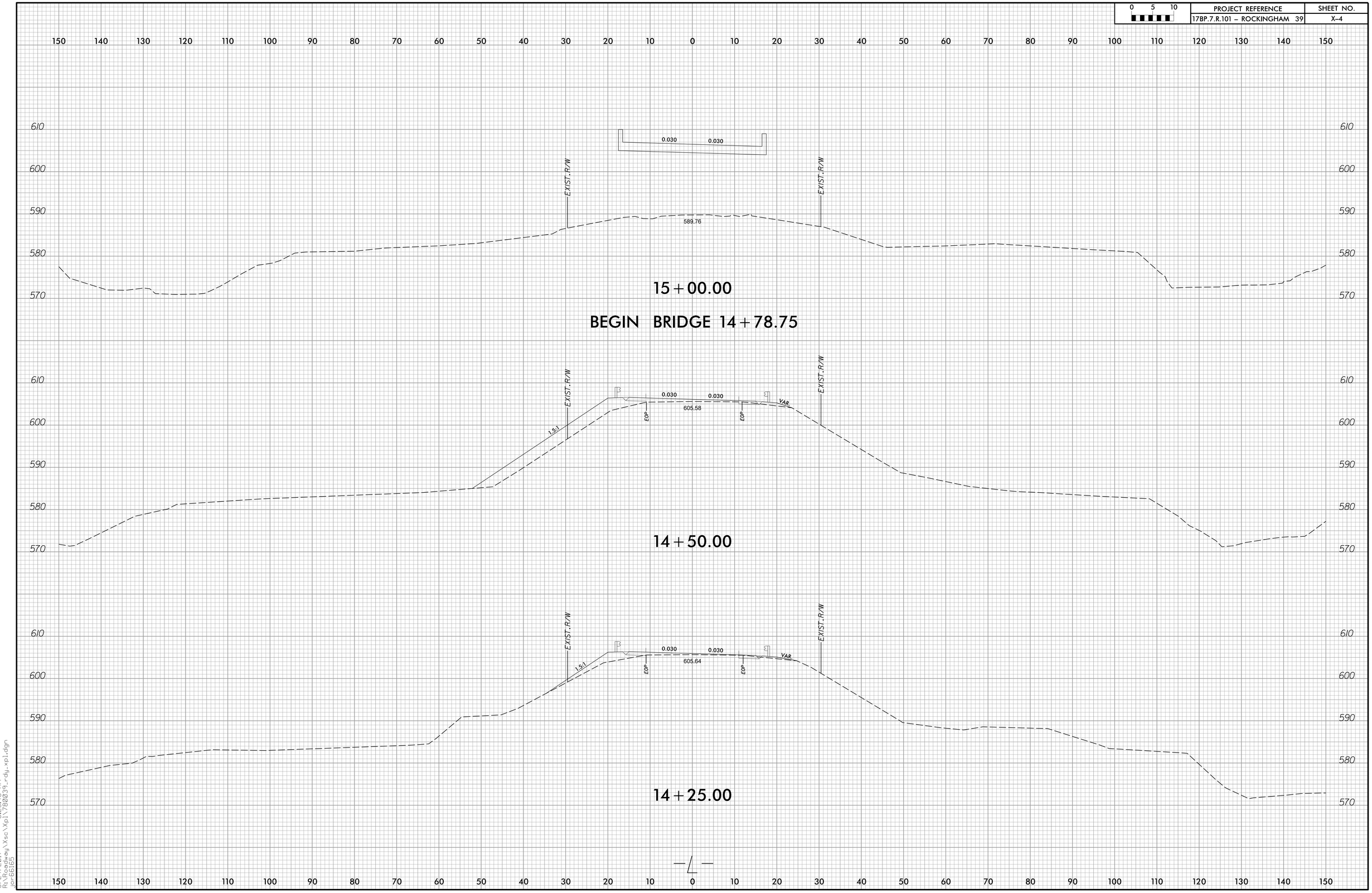

5/24/2017
R:\Roadway\Xsc\Xpl\7800039_rdy_xpl.dgn
8:23:48 AM
jor66165

0 5 10	PROJECT REFERENCE	SHEET NO.
	17BP.7.R.101 – ROCKINGHAM 39	X–5

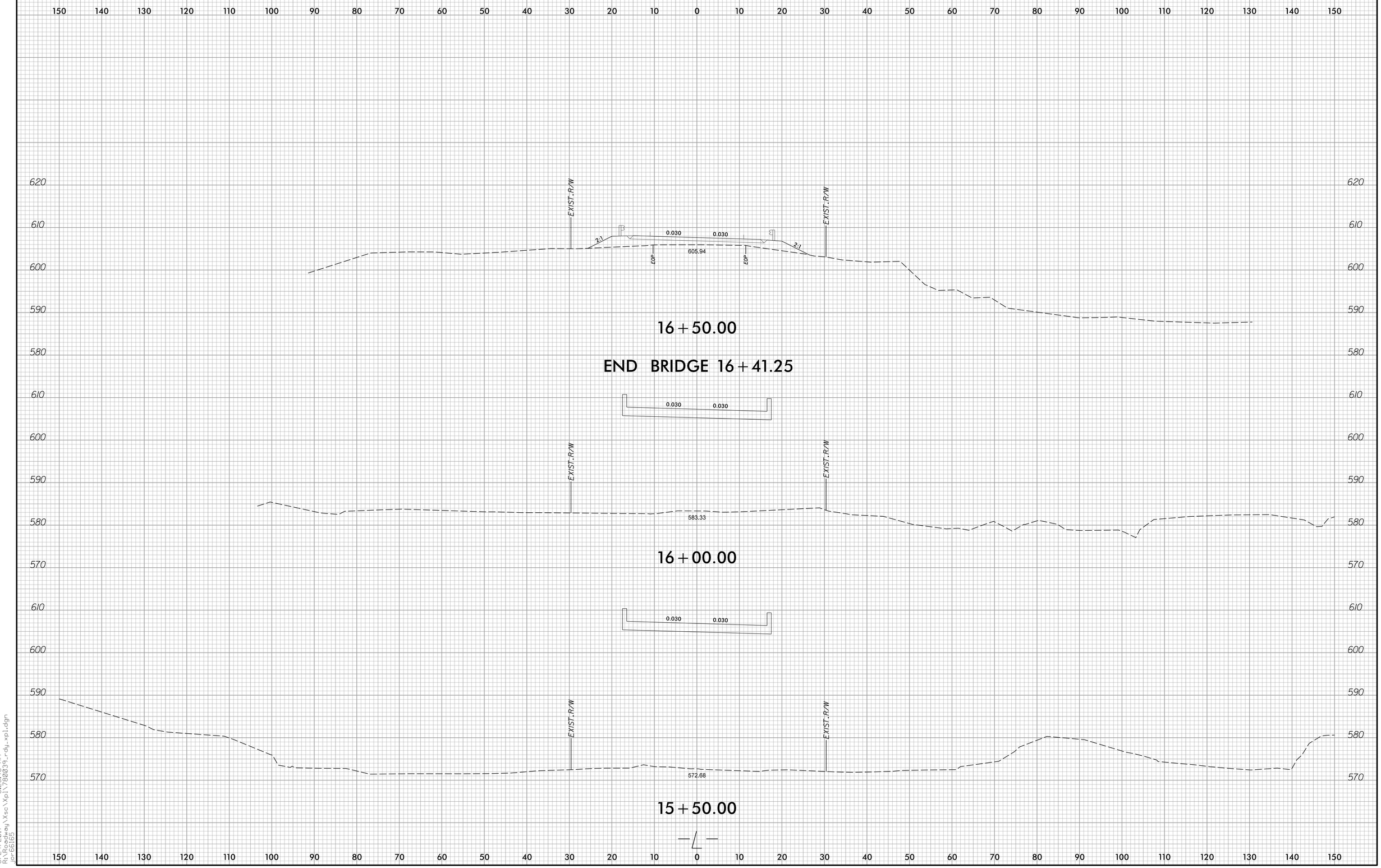

5/24/2017 8:23:48 AM
R:\Roadway\Xsc\Xpl\7800039_rdy_xpl.dgn
jor6616b

0 5 10	PROJECT REFERENCE	SHEET NO.
	17BP.7.R.101 – ROCKINGHAM 39	X–6

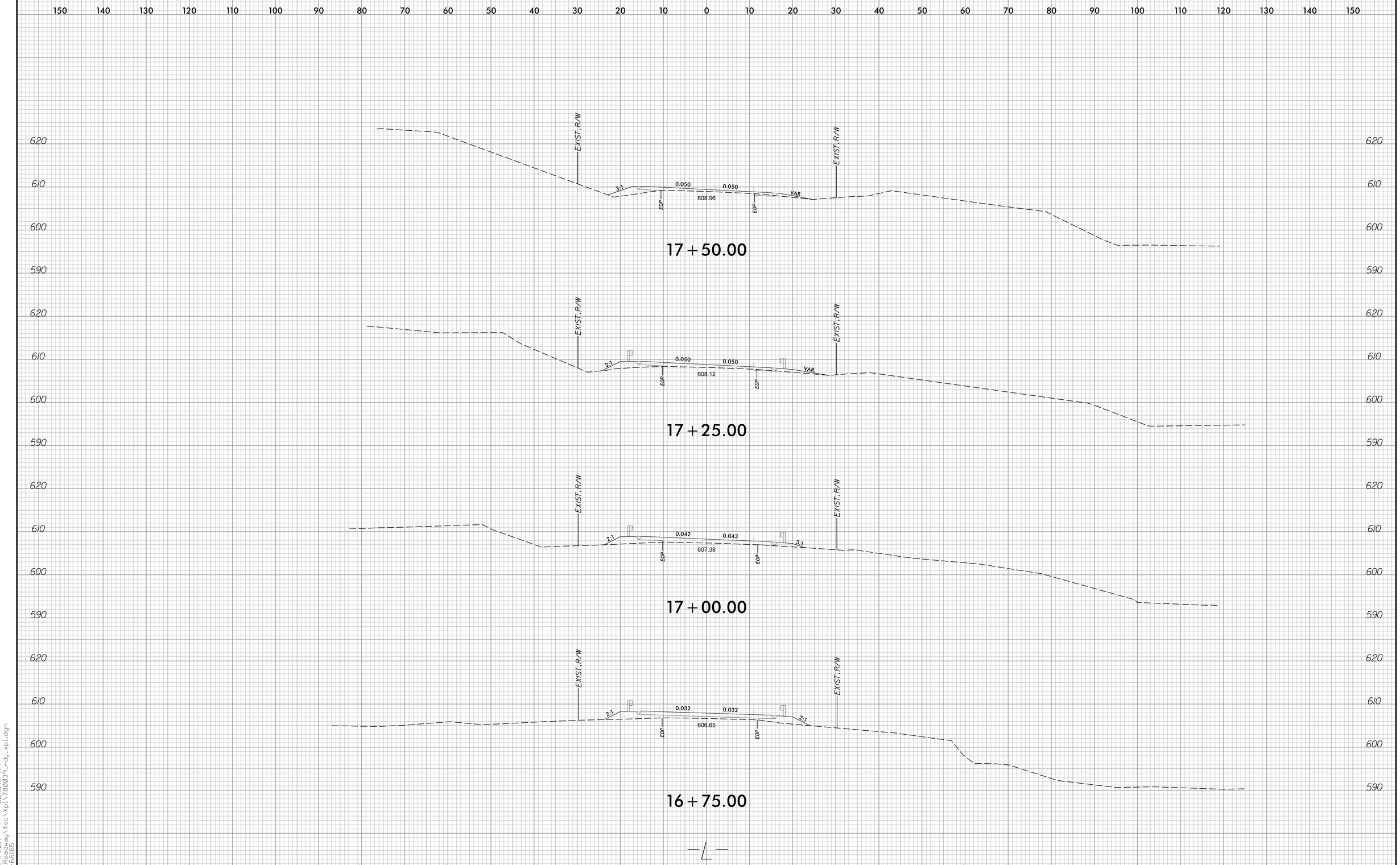

5/24/2017 8:23:48 AM
R:\Roadway\Xsc\Xpl\780039_rdy_xpl.dgn
jor66165

PROJECT REFERENCE	SHEET NO.
17BP.7.R.101 – ROCKINGHAM 39	X–7

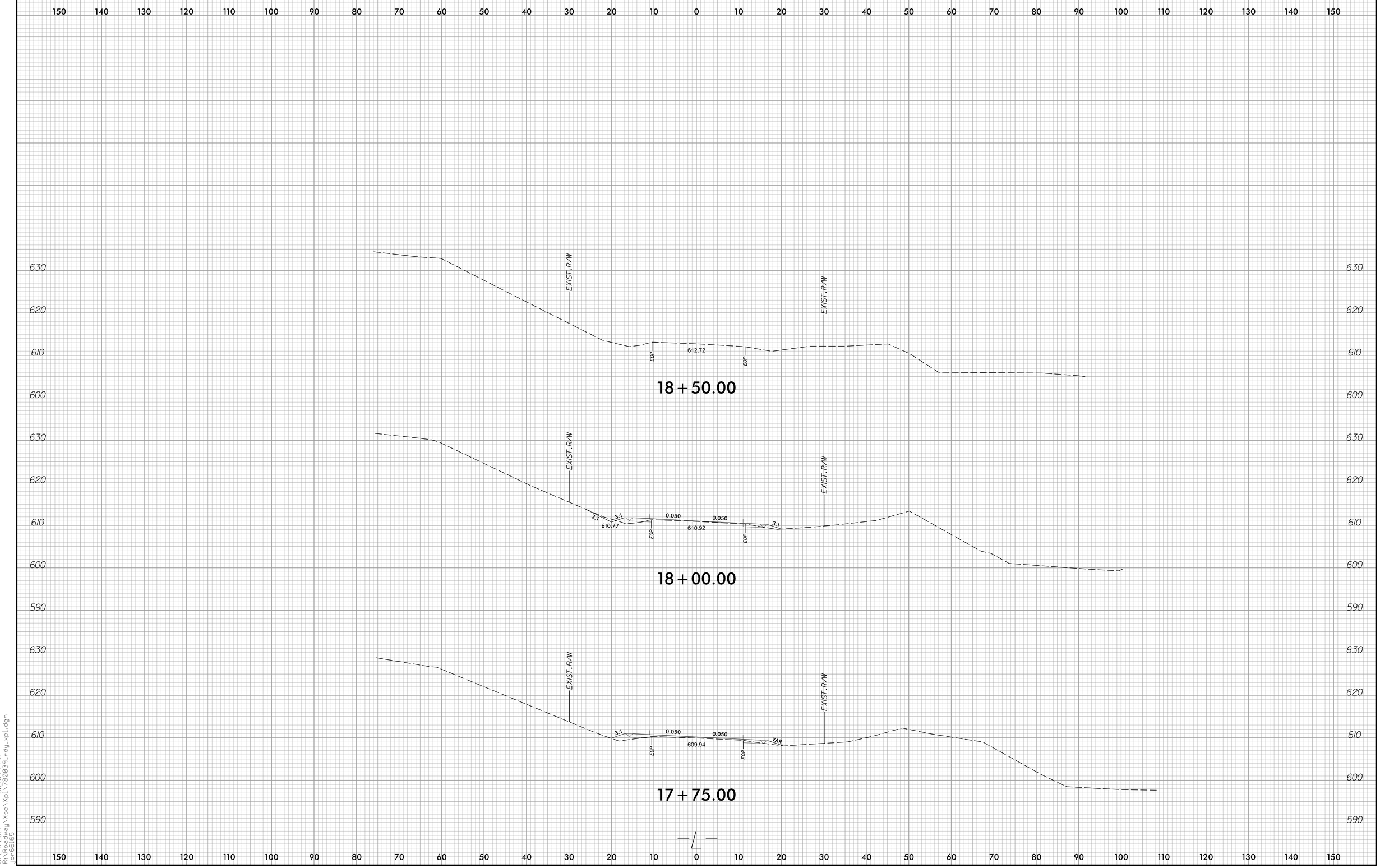

5/24/2017 8:23:49 AM
R:\Roadway\Xsc\Xpl\7800039_rdy_xpl.dgn
jor6616S

DocuSign Envelope ID: 17E46735-EAB2-424D-AFF4-B5B1F69CCA4F

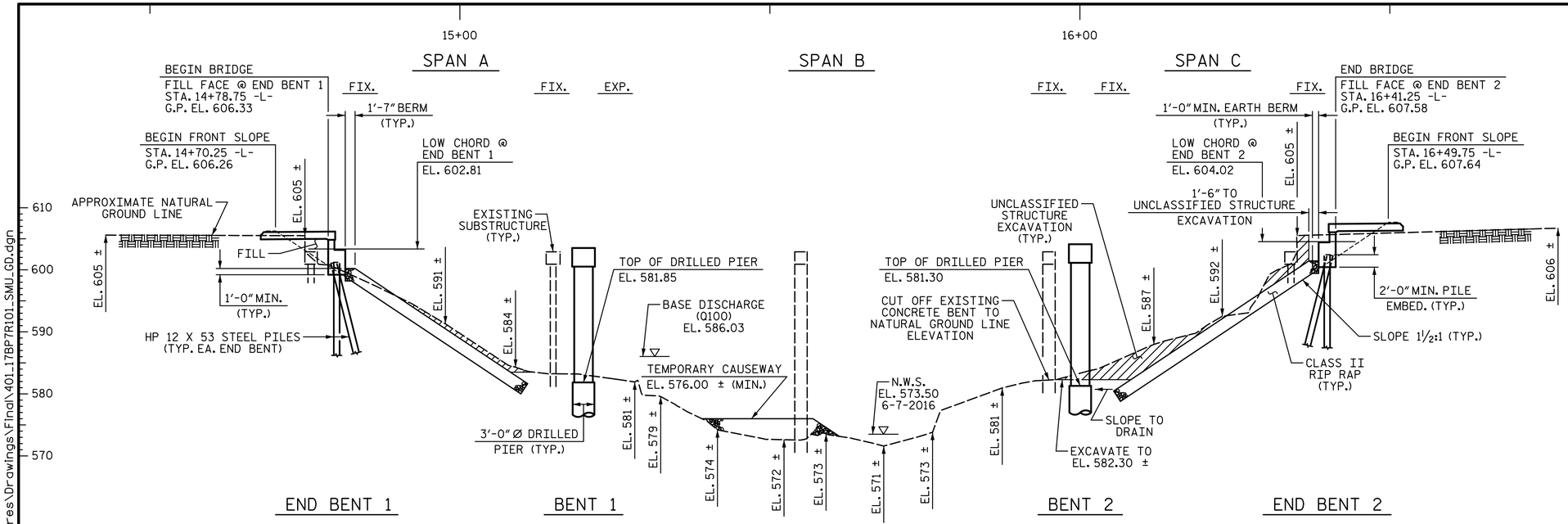

SECTION ALONG ℄ SURVEY -L-

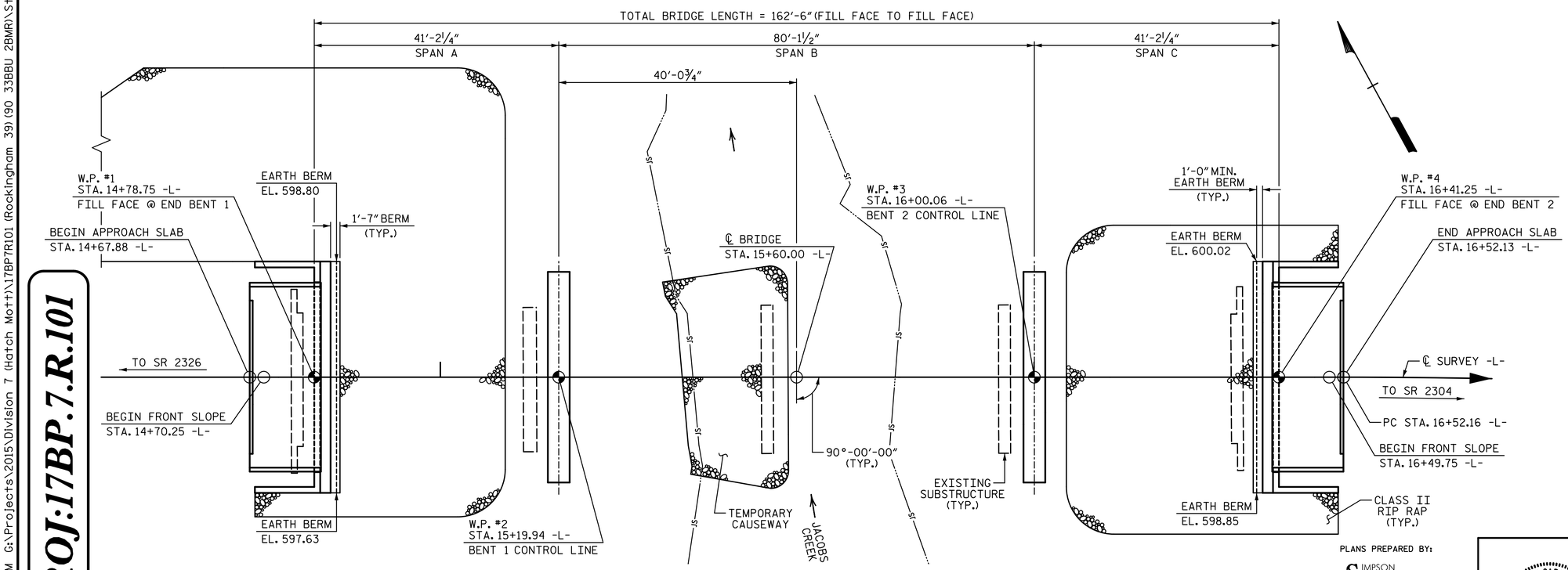

PLAN

(PILES AND DRILLED PIERS NOT SHOWN IN PLAN VIEW)

(-)3.4000% (+)0.7667%

PVI STA. 13+25.00
EL. = 605.15
VC = 210'

(+)0.7667% (+)3.4118%

PVI STA. 17+15.00
EL. = 608.14
VC = 130'

GRADE DATA -L-

HYDRAULIC DATA:

DESIGN DISCHARGE	= 2900 CFS
FREQUENCY OF DESIGN FLOOD	= 25 YEAR
DESIGN HIGH WATER ELEVATION	= 584.50
DRAINAGE AREA	= 16.3 SQ. MI.
BASE DISCHARGE (Q 100)	= 4594 CFS
BASE HIGH WATER ELEVATION	= 586.03

OVERTOPPING FLOOD DATA:

OVERTOPPING DISCHARGE	= 35000 CFS
FREQUENCY OF OVERTOPPING FLOOD	= 500+ YEAR
OVERTOPPING FLOOD ELEVATION	= 606.3 ✱✱

✱✱ OVERTOPPING OCCURS AT ROADWAY SAG STA. 13+91.00 -L- AT ROADWAY HIGH (LEFT) SIDE

HORIZONTAL CURVE DATA

PI STA. 17+67.89 -L-
Δ = 11°-01'-02.2" (RT.)
D = 4°-46'-28.7"
L = 230.75'
T = 115.73'
R = 1200.00'

I HEREBY CERTIFY THESE PLANS ARE THE AS-BUILT PLANS

PROJECT NO. 17BP.7.R.101
ROCKINGHAM COUNTY
STATION: 15+60.00 -L-

SHEET 1 OF 2 REPLACES BRIDGE #39

STATE OF NORTH CAROLINA
DEPARTMENT OF TRANSPORTATION
RALEIGH

GENERAL DRAWING

FOR BRIDGE ON SR 2316
(BETHANY RD.) OVER
JACOBS CREEK
BETWEEN SR 2326 AND SR 2304
30'-6" CLEAR ROADWAY - 90° SKEW

PLANS PREPARED BY:

SIMPSON ENGINEERS & ASSOCIATES
5640 Dillard Drive
Suite 200
Cary, NC 27518
(919) 852-0468
(919) 852-0598 (Fax)
www.simpsonengr.com
LICENSURE NO. C-2521

NORTH CAROLINA PROFESSIONAL SEAL 042268 ENGINEER BETSY S. COX
DocuSigned by: Betsy Cox
5/24/2017

DOCUMENT NOT CONSIDERED FINAL
UNLESS ALL SIGNATURES COMPLETED

REVISIONS							
NO.	BY:	DATE:	NO.	BY:	DATE:	SHEET NO.	S-1
1			3			TOTAL SHEETS	26
2			4				

DRAWN BY: T. BANKOVICH DATE: 1-17
CHECKED BY: B.S. COX DATE: 1-17
DESIGN ENGINEER OF RECORD: B.S. COX DATE: 1-17

PROJ.17BP.7.R.101

5/24/2017 7:24:17 AM G:\Projects\2015\Division 7 (Hatch Mott)\17BP7R101 (Rockingham 39)(90 33BBU 2BMR)\Structures\Drawings\Final\401_17BP7R101_SMU_GD.dgn

DocuSign Envelope ID: 17E46735-EAB2-424D-AFF4-B5B1F69CCA4F

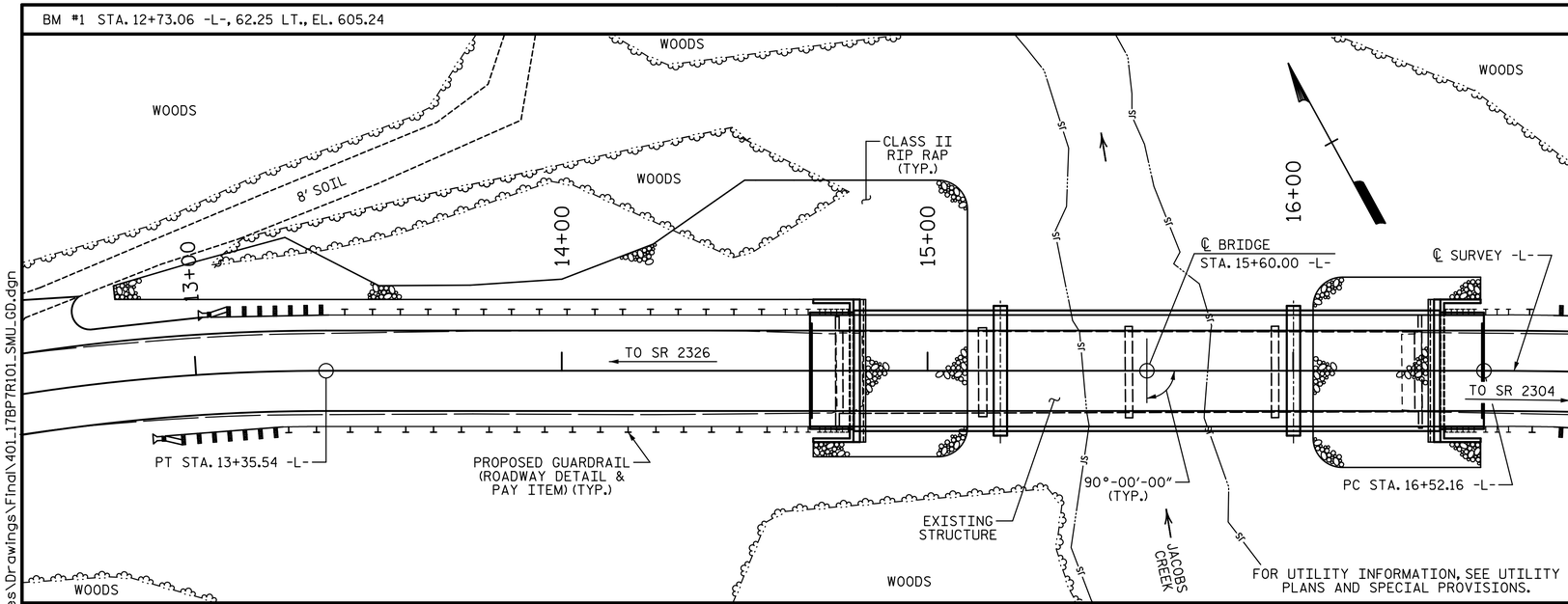

LOCATION SKETCH

TOTAL BILL OF MATERIAL

	CONSTRUCTION, MAINTENANCE, & REMOVAL OF TEMP. ACCESS	REMOVAL OF EXISTING STRUCTURE	3'-0" DIA. DRILLED PIERS IN SOIL	3'-0" DIA. DRILLED PIERS NOT IN SOIL	PERMANENT STEEL CASING FOR 3'-0" DIA. DRILLED PIER	SID INSPECTIONS	CSL TESTING	UNCLASSIFIED STRUCTURE EXCAVATION	CLASS A CONCRETE	BRIDGE APPROACH SLABS	REINFORCING STEEL	SPIRAL COLUMN REINFORCING STEEL
	LS	LS	LF	LF	LF	EA	EA	LS	CY	LS	LB	LB
SUPERSTRUCTURE										LS		
END BENT 1									25.6		3,578	
BENT 1			39.75	26.00	35.60				22.7		11,754	2,144
BENT 2			25.00	24.00	24.90				23.3		11,042	1,935
END BENT 2									25.6		3,578	
TOTAL	LS	LS	64.75	50.00	60.50	2	2	LS	97.2	LS	29,952	4,079

TOTAL BILL OF MATERIAL

PILE DRIVING EQUIPMENT SETUP FOR HP 12 X 53 STEEL PILES	HP 12 X 53 STEEL PILES		STEEL PILE POINTS	TWO BAR METAL RAIL	1'-2" X 2'-9½" CONCRETE PARAPET	RIP RAP CLASS II (2'-0" THICK)	GEOTEXTILE FOR DRAINAGE	ELASTOMERIC BEARINGS	3'-0" X 2'-9" PRESTRESSED CONCRETE BOX BEAMS		ASBESTOS ASSESSMENT
EA	NO.	LF	EA	LF	LF	TON	SY	LS	NO.	LF	LS
				305.5	320.5			LS	33	1,760	
7	7	140	7			605	675				
7	7	125	7			215	240				
14	14	265	14	305.5	320.5	820	915	LS	33	1,760	LS

NOTES:

ASSUMED LIVE LOAD = HL-93 OR ALTERNATE LOADING.

THIS BRIDGE HAS BEEN DESIGNED IN ACCORDANCE WITH THE AASHTO LRFD BRIDGE DESIGN SPECIFICATIONS.

THIS BRIDGE IS LOCATED IN SEISMIC ZONE 1.

FOR OTHER DESIGN DATA AND GENERAL NOTES, SEE SHEET SN.

FOR EROSION CONTROL MEASURES, SEE EROSION CONTROL PLANS.

REMOVAL OF THE EXISTING BRIDGE SHALL BE PERFORMED SO AS NOT TO ALLOW DEBRIS TO FALL INTO THE WATER. THE CONTRACTOR SHALL REMOVE THE BRIDGE AND SUBMIT PLANS FOR DEMOLITION IN ACCORDANCE WITH ARTICLE 402-2 OF THE STANDARD SPECIFICATIONS.

THE MATERIAL SHOWN IN THE CROSS-HATCHED AREA SHALL BE EXCAVATED FOR A DISTANCE OF 35 FT. LEFT AND 25 FT. RIGHT OF CENTERLINE ROADWAY AS DIRECTED BY THE ENGINEER. THIS WORK WILL BE PAID FOR AT THE CONTRACT LUMP SUM PRICE FOR UNCLASSIFIED STRUCTURE EXCAVATION. SEE SECTION 412 OF THE STANDARD SPECIFICATIONS.

THE EXISTING STRUCTURE CONSISTS OF 4 SPANS, 1 @ 40'-2", 2 @ 40'-0" AND 1 @ 40'-2". THE SUPERSTRUCTURE HAS A CLEAR ROADWAY WIDTH OF 22'-0" AND HAS A REINFORCED CONCRETE DECK ON STEEL I-BEAMS. THE END BENTS AND INTERIOR BENT 1 ARE REINFORCED CONCRETE CAPS ON TIMBER PILES. INTERIOR BENTS 2 AND 3 ARE REINFORCED CONCRETE POST AND BEAM ON SPREAD FOOTINGS. THE EXISTING BRIDGE WHICH IS LOCATED AT THE SITE OF THE PROPOSED BRIDGE SHALL BE REMOVED EXCEPT AS NOTED. THE EXISTING BRIDGE IS PRESENTLY POSTED FOR LOAD LIMIT. SHOULD THE STRUCTURAL INTEGRITY OF THE BRIDGE DETERIORATE DURING CONSTRUCTION OF THE PROPOSED BRIDGE, THE LOAD LIMIT MAY BE REDUCED AS FOUND NECESSARY DURING THE LIFE OF THE PROJECT.

THE SUBSTRUCTURE OF THE EXISTING BRIDGE INDICATED ON THE PLANS IS FROM THE BEST INFORMATION AVAILABLE. SINCE THIS INFORMATION IS SHOWN FOR THE CONVENIENCE OF THE CONTRACTOR, THE CONTRACTOR SHALL HAVE NO CLAIM WHATSOEVER AGAINST THE DEPARTMENT OF TRANSPORTATION FOR ANY DELAYS OR ADDITIONAL COST INCURRED BASED ON DIFFERENCES BETWEEN THE EXISTING BRIDGE SUBSTRUCTURE SHOWN ON THE PLANS AND THE ACTUAL CONDITIONS AT THE PROJECT SITE.

THIS STRUCTURE HAS BEEN DESIGNED IN ACCORDANCE WITH "HEC 18-EVALUATING SCOUR AT BRIDGES."

FOR SUBMITTAL OF WORKING DRAWINGS, SEE SPECIAL PROVISIONS.

FOR FALSEWORK AND FORMWORK, SEE SPECIAL PROVISIONS.

FOR CRANE SAFETY, SEE SPECIAL PROVISIONS.

FOR GROUT FOR STRUCTURES, SEE SPECIAL PROVISIONS.

ASPHALT WEARING SURFACE IS INCLUDED IN ROADWAY QUANTITY ON ROADWAY PLANS.

AT THE CONTRACTOR'S OPTION, AND UPON REMOVAL OF THE CAUSEWAY, THE CLASS II RIP RAP USED IN THE CAUSEWAY MAY BE PLACED AS RIP RAP SLOPE PROTECTION. SEE SPECIAL PROVISIONS FOR CONSTRUCTION, MAINTENANCE AND REMOVAL OF TEMPORARY ACCESS AT STATION 15+60.00 -L-.

INASMUCH AS THE PAINT SYSTEM ON THE EXISTING STRUCTURAL STEEL CONTAINS LEAD, THE CONTRACTOR'S ATTENTION IS DIRECTED TO ARTICLE 107-1 OF THE STANDARD SPECIFICATIONS. ANY COSTS RESULTING FROM COMPLIANCE WITH APPLICABLE STATE OR FEDERAL REGULATIONS PERTAINING TO HANDLING OF MATERIALS CONTAINING LEAD BASED PAINT SHALL BE INCLUDED IN THE BID PRICE FOR "REMOVAL OF EXISTING STRUCTURE AT STATION 15+60.00 -L-."

FOR ASBESTOS ASSESSMENT FOR BRIDGE DEMOLITION AND RENOVATION ACTIVITIES, SEE SPECIAL PROVISIONS.

FOUNDATION NOTES:

FOR DRILLED PIERS, SEE GEOTECHNICAL SPECIAL PROVISIONS AND SECTION 411 OF THE STANDARD SPECIFICATIONS.

DRILLED PIERS AT BENT 1 ARE DESIGNED FOR A FACTORED RESISTANCE OF 335 TONS PER PIER. CHECK FIELD CONDITIONS FOR THE REQUIRED TIP RESISTANCE OF 40 TSF.

PERMANENT STEEL CASINGS ARE REQUIRED FOR DRILLED PIERS AT BENT 1. DO NOT EXTEND PERMANENT STEEL CASINGS BELOW ELEVATION 570 FT WITHOUT PRIOR APPROVAL FROM THE ENGINEER.

INSTALL DRILLED PIERS AT BENT 1 TO A TIP ELEVATION NO HIGHER THAN 560 FT AND WITH THE REQUIRED TIP RESISTANCE AND PENETRATION OF AT LEAST 8 FEET INTO ROCK AS DEFINED BY ARTICLE 411-1 OF THE STANDARD SPECIFICATIONS.

THE SCOUR CRITICAL ELEVATION FOR BENT 1 IS ELEVATION 577 FT. SCOUR CRITICAL ELEVATIONS ARE USED TO MONITOR POSSIBLE SCOUR PROBLEMS DURING THE LIFE OF THE STRUCTURE.

DRILLED PIERS AT BENT 2 ARE DESIGNED FOR A FACTORED RESISTANCE OF 340 TONS PER PIER. CHECK FIELD CONDITIONS FOR THE REQUIRED TIP RESISTANCE OF 25 TSF.

PERMANENT STEEL CASINGS ARE REQUIRED FOR DRILLED PIERS AT BENT 2. DO NOT EXTEND PERMANENT STEEL CASINGS BELOW ELEVATION 573 FT WITHOUT PRIOR APPROVAL FROM THE ENGINEER.

INSTALL DRILLED PIERS AT BENT 2 TO A TIP ELEVATION NO HIGHER THAN 565 FT AND WITH THE REQUIRED TIP RESISTANCE AND PENETRATION OF AT LEAST 8 FEET INTO ROCK AS DEFINED BY ARTICLE 411-1 OF THE STANDARD SPECIFICATIONS.

THE SCOUR CRITICAL ELEVATION FOR BENT 2 IS ELEVATION 574 FT. SCOUR CRITICAL ELEVATIONS ARE USED TO MONITOR POSSIBLE SCOUR PROBLEMS DURING THE LIFE OF THE STRUCTURE.

SID INSPECTIONS MAY BE REQUIRED FOR DRILLED PIERS. THE ENGINEER WILL DETERMINE THE NEED FOR SID INSPECTIONS. FOR SID INSPECTIONS, SEE SECTION 411 OF THE STANDARD SPECIFICATIONS.

CSL TUBES ARE REQUIRED AND CSL TESTING MAY BE REQUIRED FOR DRILLED PIERS. THE ENGINEER WILL DETERMINE THE NEED FOR CSL TESTING. FOR CSL TESTING, SEE SECTION 411 OF THE STANDARD SPECIFICATIONS.

FOR PILES, SEE GEOTECHNICAL SPECIAL PROVISIONS AND SECTION 450 OF THE STANDARD SPECIFICATIONS.

PILES AT END BENT 1 ARE DESIGNED FOR A FACTORED RESISTANCE OF 65 TONS PER PILE.

DRIVE PILES AT END BENT 1 TO A REQUIRED DRIVING RESISTANCE OF 110 TONS PER PILE.

STEEL H-PILE POINTS ARE REQUIRED FOR STEEL H-PILES AT END BENT 1. FOR STEEL PILE POINTS, SEE SECTION 450 OF THE STANDARD SPECIFICATIONS.

PILES AT END BENT 2 ARE DESIGNED FOR A FACTORED RESISTANCE OF 65 TONS PER PILE.

DRIVE PILES AT END BENT 2 TO A REQUIRED DRIVING RESISTANCE OF 110 TONS PER PILE.

STEEL H-PILE POINTS ARE REQUIRED FOR STEEL H-PILES AT END BENT 2. FOR STEEL PILE POINTS, SEE SECTION 450 OF THE STANDARD SPECIFICATIONS.

PROJECT NO. 17BP.7.R.101
ROCKINGHAM COUNTY
STATION: 15+60.00 -L-

SHEET 2 OF 2

STATE OF NORTH CAROLINA
DEPARTMENT OF TRANSPORTATION
RALEIGH

GENERAL DRAWING

FOR BRIDGE ON SR 2316 (BETHANY RD.) OVER JACOBS CREEK BETWEEN SR 2326 AND SR 2304
30'-6" CLEAR ROADWAY - 90° SKEW

REVISIONS						SHEET NO.
NO.	BY:	DATE:	NO.	BY:	DATE:	S-2
1			3			TOTAL SHEETS
2			4			26

PLANS PREPARED BY:
SIMPSON ENGINEERS & ASSOCIATES
5640 Dillard Drive
Suite 200
Cary, NC 27518
(919) 852-0468
(919) 852-0598 (Fax)
www.simpsonengr.com
LICENSURE NO. C-2521

NORTH CAROLINA PROFESSIONAL SEAL ENGINEER BETSY S. COX
5/24/2017

DOCUMENT NOT CONSIDERED FINAL UNLESS ALL SIGNATURES COMPLETED

DRAWN BY: T. BANKOVICH DATE: 1-17
CHECKED BY: B.S. COX DATE: 1-17
DESIGN ENGINEER OF RECORD: B.S. COX DATE: 1-17

5/24/2017 7:24:18 AM G:\Projects\2015\Division 7 (Hatch Mott)\17BP7R101 (Rockingham 39)(90 33BBU 2BMR)\Structures\Drawings\Final\401_17BP7R101_SMU_GD.dgn

DocuSign Envelope ID: 17E46735-EAB2-424D-AFF4-B5B1F69CCA4F

5/24/2017 7:24:18 AM G:\Projects\2015\Division 7 (Hatch Mott)\17BP7R101 (Rockingham 39)(90 33BBU 2BMR)\Structures\Drawings\Final\40L17BP7R101_SMU_LRFR.dgn

LOAD AND RESISTANCE FACTOR RATING (LRFD) SUMMARY FOR PRESTRESSED CONCRETE GIRDERS

LEVEL		VEHICLE	WEIGHT (W) (TONS)	CONTROLLING LOAD RATING	MINIMUM RATING FACTORS (RF)	TONS = W X RF	STRENGTH I LIMIT STATE											SERVICE III LIMIT STATE						COMMENT NUMBER
								MOMENT					SHEAR						MOMENT					
							LIVELOAD FACTORS	DISTRIBUTION FACTORS (DF)	RATING FACTOR	SPAN	GIRDER LOCATION	DISTANCE FROM LEFT END OF SPAN (ft)	DISTRIBUTION FACTORS (DF)	RATING FACTOR	SPAN	GIRDER LOCATION	DISTANCE FROM LEFT END OF SPAN (ft)	LIVELOAD FACTORS	DISTRIBUTION FACTORS (DF)	RATING FACTOR	SPAN	GIRDER LOCATION	DISTANCE FROM LEFT END OF SPAN (ft)	
DESIGN LOAD RATING		HL-93(Inv)	N/A	**1**	2.41	- -	1.75	0.254	3.66	A	EL	19.25	0.56	**2.41**	A	EL	**7.25**	0.80	0.254	4.71	A	EL	19.25	
		HL-93(Opr)	N/A	- -	3.17	- -	1.35	0.254	4.75	A	EL	19.25	0.56	3.17	A	EL	7.25	N/A	- -	- -	- -	- -	- -	
		HS-20(Inv)	36.000	**2**	2.79	100.4	1.75	0.254	4.62	A	EL	19.25	0.56	**2.79**	A	EL	**7.25**	0.80	0.254	5.94	A	EL	19.25	
		HS-20(Opr)	36.000	- -	3.66	131.8	1.35	0.254	5.99	A	EL	19.25	0.56	3.66	A	EL	7.25	N/A	- -	- -	- -	- -	- -	
LEGAL LOAD RATING	SV	SNSH	13.500	- -	7.31	98.7	1.40	0.254	10.60	A	EL	19.25	0.56	7.31	A	EL	7.25	0.80	0.254	8.72	A	EL	19.25	
		SNGARBS2	20.000	- -	5.52	110.4	1.40	0.254	8.78	A	EL	15.25	0.56	5.52	A	EL	7.25	0.80	0.254	7.25	A	EL	15.25	
		SNAGRIS2	22.000	- -	5.27	115.9	1.40	0.254	8.59	A	EL	15.25	0.56	5.27	A	EL	7.25	0.80	0.254	7.09	A	EL	15.25	
		SNCOTTS3	27.250	- -	3.58	97.6	1.40	0.254	5.30	A	EL	19.25	0.56	3.58	A	EL	7.25	0.80	0.254	4.36	A	EL	19.25	
		SNAGGRS4	34.925	- -	3.19	111.4	1.40	0.254	4.78	A	EL	19.25	0.56	3.19	A	EL	7.25	0.80	0.254	3.93	A	EL	19.25	
		SNS5A	35.550	- -	3.37	119.8	1.40	0.254	4.65	A	EL	19.25	0.56	3.37	A	EL	7.25	0.80	0.254	3.83	A	EL	19.25	
		SNS6A	39.950	- -	3.15	125.8	1.40	0.254	4.43	A	EL	19.25	0.56	3.15	A	EL	7.25	0.80	0.254	3.64	A	EL	19.25	
		SNS7B	42.000	- -	3.24	136.1	1.40	0.254	4.22	A	EL	19.25	0.56	3.24	A	EL	7.25	0.80	0.254	3.48	A	EL	19.25	
	TTST	TNAGRIT3	33.000	- -	3.79	125.1	1.40	0.254	5.45	A	EL	19.25	0.56	3.79	A	EL	7.25	0.80	0.254	4.49	A	EL	19.25	
		TNT4A	33.075	- -	3.53	116.8	1.40	0.254	5.52	A	EL	19.25	0.56	3.53	A	EL	7.25	0.80	0.254	4.55	A	EL	19.25	
		TNT6A	41.600	- -	3.44	143.1	1.40	0.254	4.69	A	EL	19.25	0.56	3.44	A	EL	7.25	0.80	0.254	3.86	A	EL	19.25	
		TNT7A	42.000	- -	3.21	134.8	1.40	0.254	4.81	A	EL	19.25	0.56	3.21	A	EL	7.25	0.80	0.254	3.96	A	EL	19.25	
		TNT7B	42.000	- -	3.07	128.9	1.40	0.254	4.91	A	EL	19.25	0.56	3.07	A	EL	7.25	0.80	0.254	4.04	A	EL	19.25	
		TNAGRIT4	43.000	- -	2.99	128.6	1.40	0.254	4.78	A	EL	15.25	0.56	2.99	A	EL	7.25	0.80	0.254	3.94	A	EL	19.25	
		TNAGT5A	45.000	- -	3.21	144.5	1.40	0.254	4.43	A	EL	19.25	0.56	3.21	A	EL	7.25	0.80	0.254	3.64	A	EL	19.25	
		TNAGT5B	45.000	**3**	2.81	126.5	1.40	0.254	4.30	A	EL	19.25	0.56	**2.81**	A	EL	**7.25**	0.80	0.254	3.54	A	EL	19.25	

LOAD FACTORS:

	LIMIT STATE	γ_{DC}	γ_{DW}
DESIGN LOAD RATING FACTORS	STRENGTH I	1.25	1.50
	SERVICE III	1.00	1.00

NOTES:

MINIMUM RATING FACTORS ARE BASED ON THE STRENGTH I AND SERVICE III LIMIT STATES.

ALLOWABLE STRESSES FOR SERVICE III LIMIT STATE ARE AS REQUIRED FOR DESIGN.

DISTANCE FROM LEFT END OF SPAN IS MEASURED FROM ℄ BEARING.

⟨#⟩ CONTROLLING LOAD RATING

⟨1⟩ DESIGN LOAD RATING (HL-93)

⟨2⟩ DESIGN LOAD RATING (HS-20)

⟨3⟩ LEGAL LOAD RATING **

** SEE CHART FOR VEHICLE TYPE

GIRDER LOCATION

I - INTERIOR GIRDER
EL - EXTERIOR LEFT GIRDER
ER - EXTERIOR RIGHT GIRDER

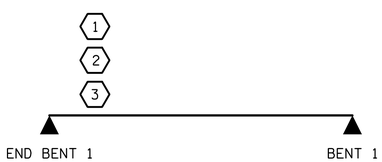

LRFR SUMMARY

SPAN A SHOWN, SPAN C SIMILAR

PROJECT NO. 17BP.7.R.101

ROCKINGHAM COUNTY

STATION: 15+60.00 -L-

SHEET 1 OF 2

STATE OF NORTH CAROLINA
DEPARTMENT OF TRANSPORTATION
RALEIGH

LRFR SUMMARY FOR 40'-0" BOX BEAM UNIT 90° SKEW

(NON-INTERSTATE TRAFFIC)

PLANS PREPARED BY:

SIMPSON ENGINEERS & ASSOCIATES
5640 Dillard Drive
Suite 200
Cary, NC 27518
(919) 852-0468
(919) 852-0598 (Fax)
www.simpsonengr.com
LICENSURE NO. C-2521

NORTH CAROLINA PROFESSIONAL SEAL 031268 ENGINEER BETSY S. COX
5/24/2017

DOCUMENT NOT CONSIDERED FINAL UNLESS ALL SIGNATURES COMPLETED

DRAWN BY:	T. BANKOVICH	DATE:	1-17
CHECKED BY:	B.S. COX	DATE:	1-17
DESIGN ENGINEER OF RECORD:	B.S. COX	DATE:	1-17

REVISIONS						SHEET NO.
NO.	BY:	DATE:	NO.	BY:	DATE:	S-3
1			3			TOTAL SHEETS
2			4			26

DocuSign Envelope ID: 17E46735-EAB2-424D-AFF4-B5B1F69CCA4F

5/24/2017 7:24:18 AM G:\Projects\2015\Division 7 (Hatch Mott)\17BP7R101 (Rockingham 39)(90 33BBU 2BMR)\Structures\Drawings\Final\401_17BP7R101_SMU_LRFR.dgn

LOAD AND RESISTANCE FACTOR RATING (LRFD) SUMMARY FOR PRESTRESSED CONCRETE GIRDERS

LEVEL		VEHICLE	WEIGHT (W) (TONS)	CONTROLLING LOAD RATING	MINIMUM RATING FACTORS (RF)	TONS = W X RF	STRENGTH I LIMIT STATE											SERVICE III LIMIT STATE						COMMENT NUMBER
								MOMENT					SHEAR						MOMENT					
							LIVELOAD FACTORS	DISTRIBUTION FACTORS (DF)	RATING FACTOR	SPAN	GIRDER LOCATION	DISTANCE FROM LEFT END OF SPAN (ft)	DISTRIBUTION FACTORS (DF)	RATING FACTOR	SPAN	GIRDER LOCATION	DISTANCE FROM LEFT END OF SPAN (ft)	LIVELOAD FACTORS	DISTRIBUTION FACTORS (DF)	RATING FACTOR	SPAN	GIRDER LOCATION	DISTANCE FROM LEFT END OF SPAN (ft)	
DESIGN LOAD RATING		HL-93(Inv)	N/A	**1**	1.155	--	1.75	0.273	1.72	B	EL	39.25	0.502	1.51	B	EL	7.85	0.80	0.273	**1.15**	B	EL	**39.25**	
		HL-93(Opr)	N/A	--	1.958	--	1.35	0.273	2.23	B	EL	39.25	0.502	1.96	B	EL	7.85	N/A	--	--	--	--	--	
		HS-20(Inv)	36.000	**2**	1.533	55.181	1.75	0.273	2.28	B	EL	39.25	0.502	1.91	B	EL	7.85	0.80	0.273	**1.53**	B	EL	**39.25**	
		HS-20(Opr)	36.000	--	2.473	89.021	1.35	0.273	2.96	B	EL	39.25	0.502	2.47	B	EL	7.85	N/A	--	--	--	--	--	
LEGAL LOAD RATING	SV	SNSH	13.500	--	3.509	47.376	1.4	0.273	6.53	B	EL	39.25	0.502	5.73	B	EL	7.85	0.80	0.273	3.51	B	EL	39.25	
		SNGARBS2	20.000	--	2.594	51.88	1.4	0.273	4.82	B	EL	39.25	0.502	4.06	B	EL	7.85	0.80	0.273	2.59	B	EL	39.25	
		SNAGRIS2	22.000	--	2.448	53.85	1.4	0.273	4.55	B	EL	39.25	0.502	3.76	B	EL	7.85	0.80	0.273	2.45	B	EL	39.25	
		SNCOTTS3	27.250	--	1.746	47.571	1.4	0.273	3.25	B	EL	39.25	0.502	2.86	B	EL	7.85	0.80	0.273	1.75	B	EL	39.25	
		SNAGGRS4	34.925	--	1.451	50.667	1.4	0.273	2.7	B	EL	39.25	0.502	2.36	B	EL	7.85	0.80	0.273	1.45	B	EL	39.25	
		SNS5A	35.550	--	1.419	50.453	1.4	0.273	2.64	B	EL	39.25	0.502	2.38	B	EL	7.85	0.80	0.273	1.42	B	EL	39.25	
		SNS6A	39.950	--	1.299	51.885	1.4	0.273	2.42	B	EL	39.25	0.502	2.17	B	EL	7.85	0.80	0.273	1.30	B	EL	39.25	
		SNS7B	42.000	--	1.237	51.941	1.4	0.273	2.3	B	EL	39.25	0.502	2.13	B	EL	7.85	0.80	0.273	1.24	B	EL	39.25	
	TTST	TNAGRIT3	33.000	--	1.583	52.231	1.4	0.273	2.94	B	EL	39.25	0.502	2.59	B	EL	7.85	0.80	0.273	1.58	B	EL	39.25	
		TNT4A	33.075	--	1.589	52.55	1.4	0.273	2.96	B	EL	39.25	0.502	2.53	B	EL	7.85	0.80	0.273	1.59	B	EL	39.25	
		TNT6A	41.600	--	1.296	53.907	1.4	0.273	2.41	B	EL	39.25	0.502	2.25	B	EL	7.85	0.80	0.273	1.30	B	EL	39.25	
		TNT7A	42.000	--	1.301	54.625	1.4	0.273	2.42	B	EL	39.25	0.502	2.21	B	EL	7.85	0.80	0.273	1.30	B	EL	39.25	
		TNT7B	42.000	--	1.341	56.333	1.4	0.273	2.49	B	EL	39.25	0.502	2.08	B	EL	7.85	0.80	0.273	1.34	B	EL	39.25	
		TNAGRIT4	43.000	--	1.279	55.001	1.4	0.273	2.38	B	EL	39.25	0.502	2.02	B	EL	7.85	0.80	0.273	1.28	B	EL	39.25	
		TNAGT5A	45.000	--	1.207	54.337	1.4	0.273	2.25	B	EL	39.25	0.502	2	B	EL	7.85	0.80	0.273	1.21	B	EL	39.25	
		TNAGT5B	45.000	**3**	1.194	53.739	1.4	0.273	2.22	B	EL	39.25	0.502	1.92	B	EL	7.85	0.80	0.273	**1.19**	B	EL	**39.25**	

LOAD FACTORS:

DESIGN LOAD RATING FACTORS	LIMIT STATE	γ_{DC}	γ_{DW}
	STRENGTH I	1.25	1.50
	SERVICE III	1.00	1.00

NOTES:

MINIMUM RATING FACTORS ARE BASED ON THE STRENGTH I AND SERVICE III LIMIT STATES.

ALLOWABLE STRESSES FOR SERVICE III LIMIT STATE ARE AS REQUIRED FOR DESIGN.

DISTANCE FROM LEFT END OF SPAN IS MEASURED FROM ℄ BEARING.

(#) CONTROLLING LOAD RATING

(1) DESIGN LOAD RATING (HL-93)

(2) DESIGN LOAD RATING (HS-20)

(3) LEGAL LOAD RATING **

** SEE CHART FOR VEHICLE TYPE

GIRDER LOCATION

I - INTERIOR GIRDER
EL - EXTERIOR LEFT GIRDER
ER - EXTERIOR RIGHT GIRDER

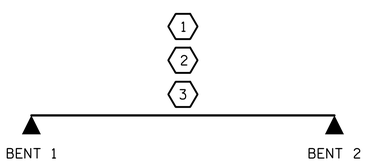

LRFR SUMMARY
SPAN B

PROJECT NO. 17BP.7.R.101
ROCKINGHAM COUNTY
STATION: 15+60.00 -L-

SHEET 2 OF 2

STATE OF NORTH CAROLINA
DEPARTMENT OF TRANSPORTATION
RALEIGH

LRFR SUMMARY FOR 80'-0" BOX BEAM UNIT 90° SKEW

(NON-INTERSTATE TRAFFIC)

PLANS PREPARED BY:

SIMPSON ENGINEERS & ASSOCIATES
5640 Dillard Drive
Suite 200
Cary, NC 27518
(919) 852-0468
(919) 852-0598 (Fax)
www.simpsonengr.com
LICENSURE NO. C-2521

NORTH CAROLINA PROFESSIONAL SEAL 030268 ENGINEER BETSY S. COX
5/24/2017

DOCUMENT NOT CONSIDERED FINAL UNLESS ALL SIGNATURES COMPLETED

REVISIONS						
NO.	BY:	DATE:	NO.	BY:	DATE:	
1			3			
2			4			

SHEET NO. S-4
TOTAL SHEETS 26

DRAWN BY: T. BANKOVICH DATE: 1-17
CHECKED BY: B.S. COX DATE: 1-17
DESIGN ENGINEER OF RECORD: B.S. COX DATE: 1-17

DocuSign Envelope ID: 17E46735-EAB2-424D-AFF4-B5B1F69CCA4F

5/24/2017 7:24:19 AM G:\Projects\2015\Division 7 (Hatch Mott)\17BP7R101 (Rockingham 39)(90 33BBU 2BMR)\Structures\Drawings\Final\401_17BP7R101_SMU_SUPER.dgn

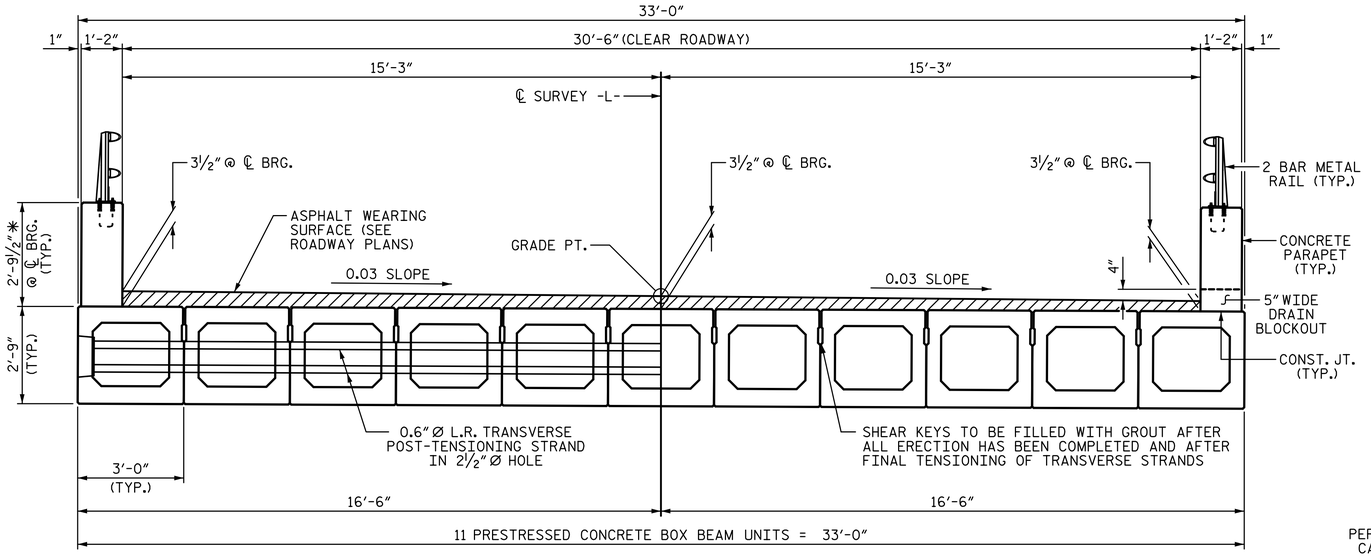

HALF SECTION
(AT INTERMEDIATE DIAPHRAGMS)

HALF SECTION
(THROUGH VOIDS)

TYPICAL SECTION

✱ - THE MAXIMUM CONCRETE PARAPET HEIGHTS AND ASPHALT THICKNESS ARE SHOWN. THE HEIGHT OF THE CONCRETE PARAPET AND ASPHALT THICKNESS VARIES WHILE THE TOP OF THE CONCRETE PARAPET FOLLOWS THE PROFILE OF THE GUTTERLINE.
SEE THE "CONCRETE PARAPET DETAILS" SHEET.

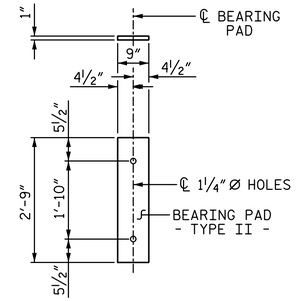

FIXED END
(TYPE II - 66 REQ'D)

ELASTOMERIC BEARING DETAILS

ELASTOMER IN ALL BEARINGS SHALL BE 60 DUROMETER HARDNESS.

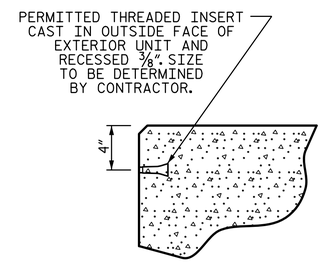

THREADED INSERT DETAIL

NOTES:

ALL PRESTRESSING STRANDS SHALL BE 7-WIRE LOW RELAXATION GRADE 270 STRANDS AND SHALL CONFORM TO AASHTO M203 EXCEPT FOR SAMPLING REQUIREMENTS WHICH SHALL BE IN ACCORDANCE WITH THE STANDARD SPECIFICATIONS.

ALL REINFORCING STEEL CAST WITH THE BOX BEAM SECTIONS SHALL BE GRADE 60 AND SHALL BE INCLUDED IN THE UNIT PRICE BID FOR PRESTRESSED CONCRETE BOX BEAMS.

FLAME CUTTING OF THE TRANSVERSE POST-TENSIONING STRAND IS NOT ALLOWED.

RECESSES FOR TRANSVERSE STRANDS SHALL BE GROUTED AFTER THE TENSIONING OF THE STRANDS.

THE 2½" Ø DOWEL HOLES AT FIXED ENDS OF BOX BEAM SECTIONS SHALL BE FILLED WITH NON-SHRINK GROUT. THE 2½" Ø DOWEL HOLES AT EXPANSION ENDS OF BOX BEAM SECTIONS SHALL BE FILLED WITH JOINT SEALER MATERIAL TO 1½" ABOVE THE TOP OF DOWELS AND THEN FILLED WITH GROUT.

THE JOINT SEALER MATERIAL SHALL CONFORM TO THE REQUIREMENTS OF TYPE SL LOW MODULUS SILICONE SEALANT. THE 2" Ø BACKER ROD SHALL CONFORM TO THE REQUIREMENTS OF TYPE M BOND BREAKER. SEE SECTION 1028 OF THE STANDARD SPECIFICATIONS.

THE TRANSFER OF LOAD FROM THE ANCHORAGES TO THE BOX BEAM UNIT SHALL BE DONE WHEN THE CONCRETE HAS REACHED A COMPRESSIVE STRENGTH OF NOT LESS THAN 4000 PSI FOR SPANS A AND C AND 6000 PSI FOR SPAN B.

ALL REINFORCING STEEL IN CONCRETE PARAPETS SHALL BE EPOXY COATED.

PRESTRESSING STRANDS SHALL BE CUT FLUSH WITH THE BOX BEAM UNIT ENDS.

APPLY EPOXY PROTECTIVE COATING TO BOX BEAM UNIT ENDS.

VERTICAL GROOVED CONTRACTION JOINTS, ½" IN DEPTH, SHALL BE TOOLED IN ALL EXPOSED FACES OF THE CONCRETE PARAPET AND IN ACCORDANCE WITH ARTICLE 825-10(B) OF THE STANDARD SPECIFICATIONS. A VERTICAL CONTRACTION JOINT SHALL BE LOCATED AT EACH THIRD POINT BETWEEN PARAPET EXPANSION JOINTS. ONLY ONE CONTRACTION JOINT IS REQUIRED AT MIDPOINT OF PARAPET SEGMENTS LESS THAN 20 FEET IN LENGTH AND NO CONTRACTION JOINTS ARE REQUIRED FOR THOSE SEGMENTS LESS THAN 10 FEET IN LENGTH.

THE LOCATION OF THE VOID DRAINS MAY BE SHIFTED SLIGHTLY WHERE NECESSARY TO CLEAR PRESTRESSING STRANDS OR TRANSVERSE REINFORCING STEEL.

FOR GROUT FOR STRUCTURES, SEE SPECIAL PROVISIONS.

THE PERMITTED THREADED INSERTS ARE DETAILED AS AN OPTION FOR THE CONTRACTOR TO ATTACH FALSEWORK AND FORMWORK DURING CONSTRUCTION.

THE PERMITTED THREADED INSERTS IN THE EXTERIOR UNITS SHALL BE SIZED BY THE CONTRACTOR, SPACED AT 4'-0" CENTERS AND GALVANIZED IN ACCORDANCE WITH SECTION 1076 OF THE STANDARD SPECIFICATIONS. STAINLESS STEEL THREADED INSERTS MAY BE USED AS AN ALTERNATE.

THE PERMITTED THREADED INSERTS SHALL BE GROUTED BY THE CONTRACTOR IMMEDIATELY FOLLOWING REMOVAL OF THE FALSEWORK.

THE COST OF THE PERMITTED THREADED INSERTS SHALL BE INCLUDED IN THE PRICE BID FOR THE PRECAST UNITS.

THE DRAIN OPENING AT THE GUTTERLINE SHALL BE 4" X 5". THE HEIGHT OF THE BLOCKOUT IN THE CONCRETE PARAPET SHALL EXTEND FROM THE TOP OF THE BOX BEAM UNIT TO THE TOP OF THE DRAIN OPENING.

APPLY EPOXY PROTECTIVE COATING TO EXTERIOR FACE OF THE EXTERIOR BOX BEAM UNITS THAT REQUIRE DRAINS IN THE CONCRETE PARAPET.

FIXED END | FIXED END | EXPANSION END | FIXED END | FIXED END

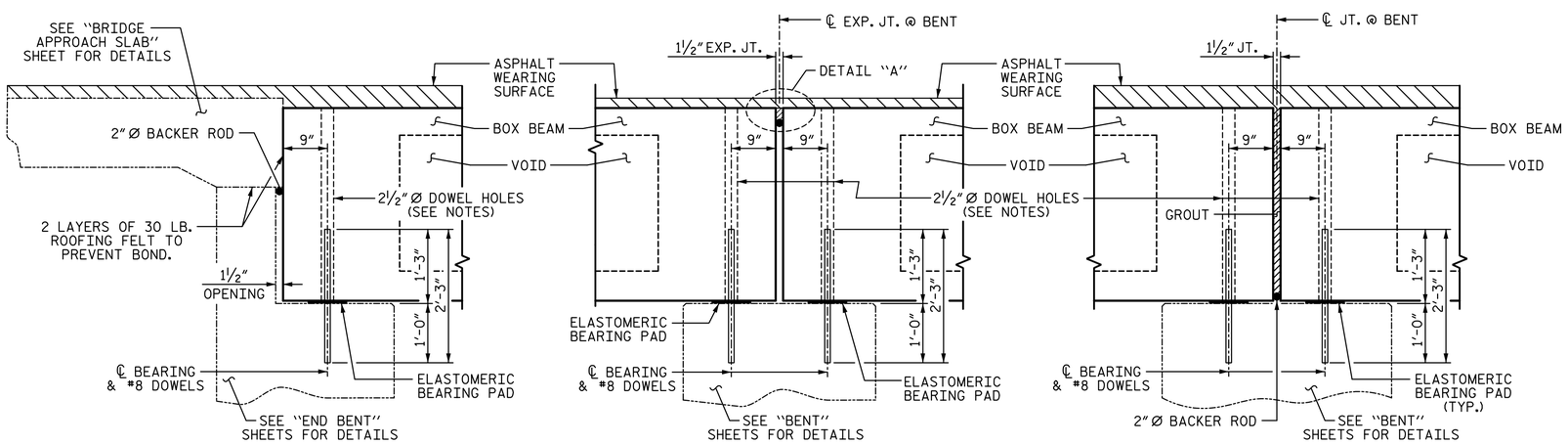

SECTION AT END BENT

SECTION AT BENT 1

SECTION AT BENT 2

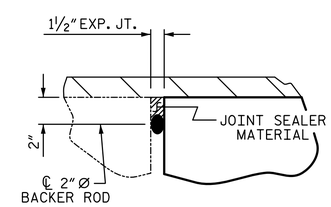

DETAIL "A"

PROJECT NO. 17BP.7.R.101
ROCKINGHAM COUNTY
STATION: 15+60.00 -L-

SHEET 1 OF 6

STATE OF NORTH CAROLINA
DEPARTMENT OF TRANSPORTATION
RALEIGH

SUPERSTRUCTURE
3'-0" X 2'-9"
PRESTRESSED CONCRETE
BOX BEAM UNIT
90° SKEW

PLANS PREPARED BY:
SIMPSON ENGINEERS & ASSOCIATES
5640 Dillard Drive
Suite 200
Cary, NC 27518
(919) 852-0468
(919) 852-0598 (Fax)
www.simpsonengr.com
LICENSURE NO. C-2521

NORTH CAROLINA PROFESSIONAL SEAL 042268 ENGINEER BETSY S. COX
5/24/2017

DOCUMENT NOT CONSIDERED FINAL UNLESS ALL SIGNATURES COMPLETED

DRAWN BY:	T. BANKOVICH	DATE:	1-17
CHECKED BY:	B.S. COX	DATE:	1-17
DESIGN ENGINEER OF RECORD:	B.S. COX	DATE:	1-17

REVISIONS								SHEET NO.
NO.	BY:	DATE:	NO.	BY:	DATE:			S-5
1			3					TOTAL SHEETS
2			4					26

DocuSign Envelope ID: 17E46735-EAB2-424D-AFF4-B5B1F69CCA4F

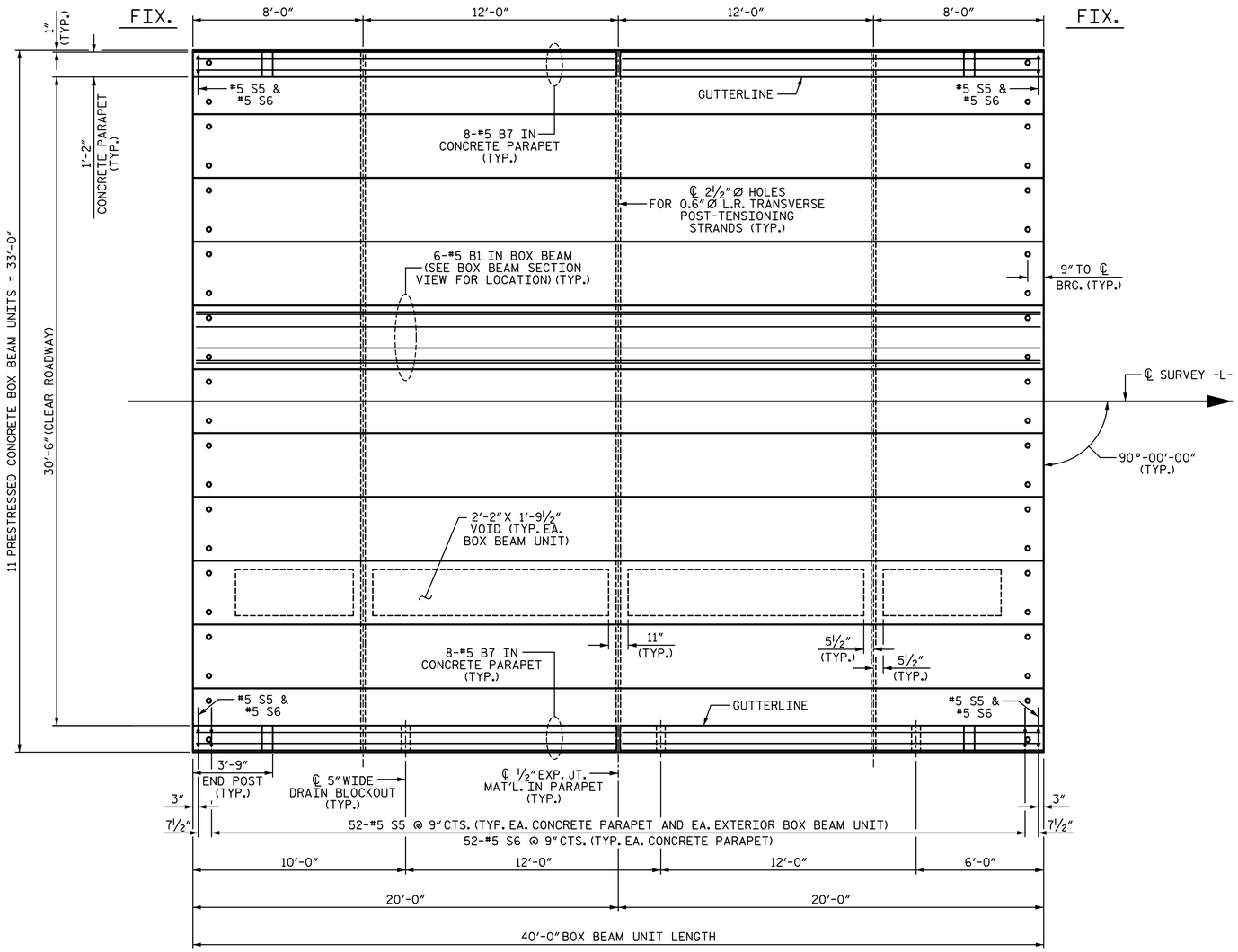

PLAN OF SPAN A

SPAN A SHOWN, SPAN C SIMILAR

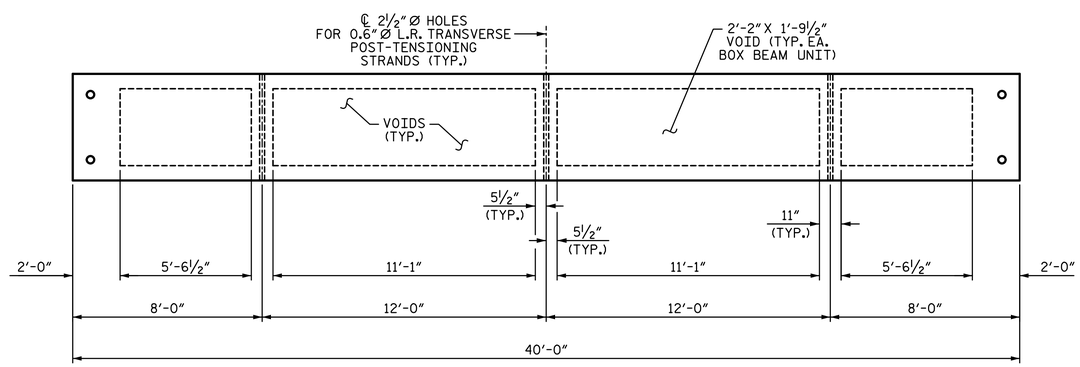

DIAPHRAGM AND VOID LAYOUT

PROJECT NO. 17BP.7.R.101

ROCKINGHAM COUNTY

STATION: 15+60.00 -L-

SHEET 2 OF 6

STATE OF NORTH CAROLINA
DEPARTMENT OF TRANSPORTATION
RALEIGH

SUPERSTRUCTURE

PLAN OF SPAN A AND C
(40'-0" UNIT)
30'-6" CLEAR ROADWAY
90° SKEW

PLANS PREPARED BY:

SIMPSON ENGINEERS & ASSOCIATES
5640 Dillard Drive
Suite 200
Cary, NC 27518
(919) 852-0468
(919) 852-0598 (Fax)
www.simpsonengr.com
LICENSURE NO. C-2521

NORTH CAROLINA PROFESSIONAL SEAL 042268 ENGINEER BETSY S. COX
5/24/2017

DOCUMENT NOT CONSIDERED FINAL UNLESS ALL SIGNATURES COMPLETED

REVISIONS								SHEET NO.
NO.	BY:	DATE:	NO.	BY:	DATE:			S-6
1			3					TOTAL SHEETS
2			4					26

DRAWN BY: T. BANKOVICH DATE: 1-17
CHECKED BY: B.S. COX DATE: 1-17
DESIGN ENGINEER OF RECORD: B.S. COX DATE: 1-17

5/24/2017 7:24:19 AM G:\Projects\2015\Division 7 (Hatch Mott)\17BP7R101 (Rockingham 39)(90 33BBU 2BMR)\Structures\Drawings\Final\401_17BP7R101_SMU_SUPER.dgn

DocuSign Envelope ID: 17E46735-EAB2-424D-AFF4-B5B1F69CCA4F

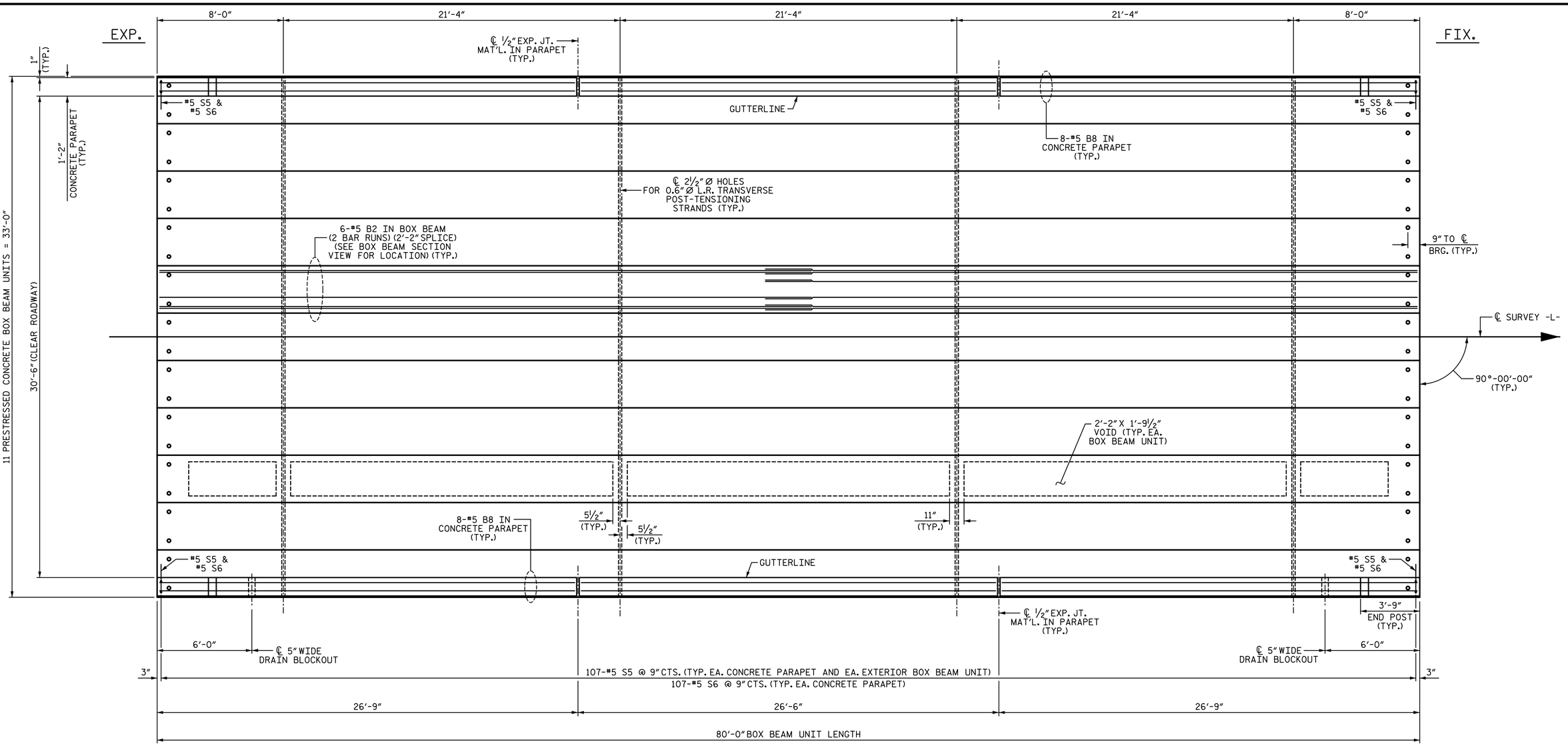

PLAN OF SPAN B

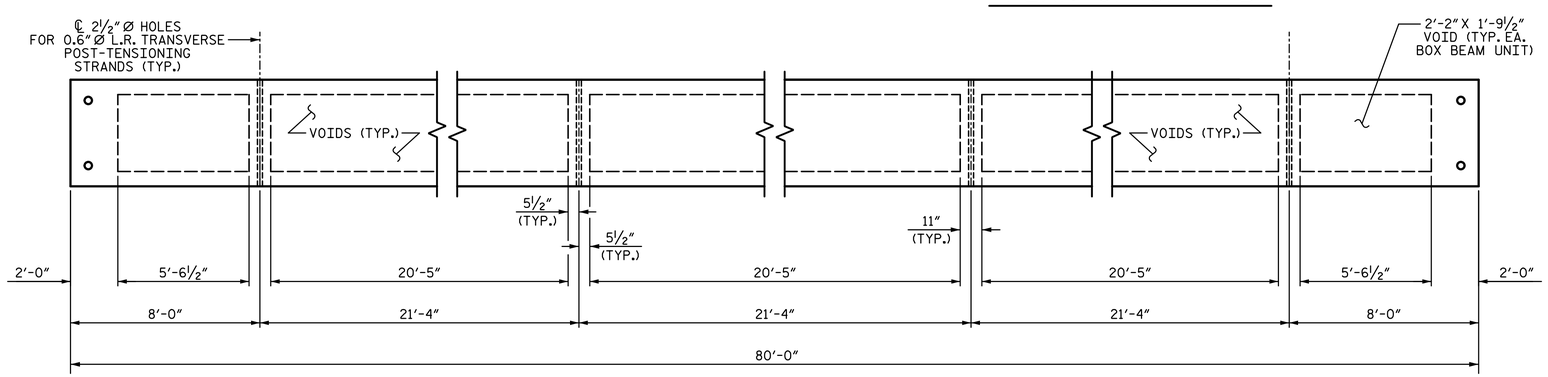

DIAPHRAGM AND VOID LAYOUT

PROJECT NO. 17BP.7.R.101

ROCKINGHAM COUNTY

STATION: 15+60.00 -L-

SHEET 3 OF 6

STATE OF NORTH CAROLINA
DEPARTMENT OF TRANSPORTATION
RALEIGH

SUPERSTRUCTURE

PLAN OF SPAN B
(80'-0" UNIT)
30'-6" CLEAR ROADWAY
90° SKEW

PLANS PREPARED BY:

SIMPSON ENGINEERS & ASSOCIATES
5640 Dillard Drive
Suite 200
Cary, NC 27518
(919) 852-0468
(919) 852-0598 (Fax)
www.simpsonengr.com
LICENSURE NO. C-2521

NORTH CAROLINA PROFESSIONAL SEAL 21268 ENGINEER BETSY S. COX
5/24/2017

DOCUMENT NOT CONSIDERED FINAL UNLESS ALL SIGNATURES COMPLETED

REVISIONS						SHEET NO.
NO.	BY:	DATE:	NO.	BY:	DATE:	S-7
1			3			TOTAL SHEETS
2			4			26

DRAWN BY: T. BANKOVICH DATE: 1-17
CHECKED BY: B.S. COX DATE: 1-17
DESIGN ENGINEER OF RECORD: B.S. COX DATE: 1-17

5/24/2017 7:24:19 AM G:\Projects\2015\Division 7 (Hatch Mott)\17BP7R101 (Rockingham 39)(90 33BBU 2BMR)\Structures\Drawings\Final\401_17BP7R101_SMU_SUPER.dgn

DocuSign Envelope ID: 17E46735-EAB2-424D-AFF4-B5B1F69CCA4F

5/24/2017 7:24:19 AM G:\Projects\2015\Division 7 (Hatch Mott)\17BP7R101 (Rockingham 39) (90 33BBU 2BMR)\Structures\Drawings\Final\401_17BP7R101_SMU_SUPER.dgn

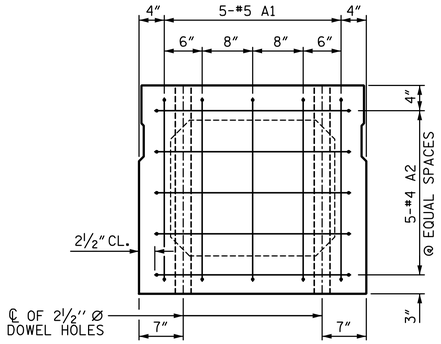

END ELEVATION

SHOWING PLACEMENT OF #5 & #4 "A" BARS AND LOCATION OF DOWEL HOLES. (INTERIOR BOX BEAM SECTION SHOWN-EXTERIOR SECTION SIMILAR EXCEPT SHEAR KEY LOCATION. STRAND LAYOUT NOT SHOWN.)

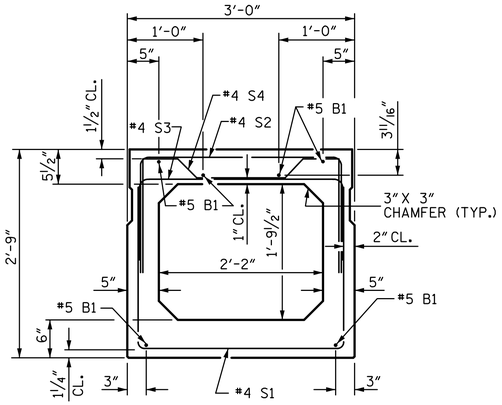

INTERIOR BOX BEAM SECTION

(STRAND LAYOUT NOT SHOWN)

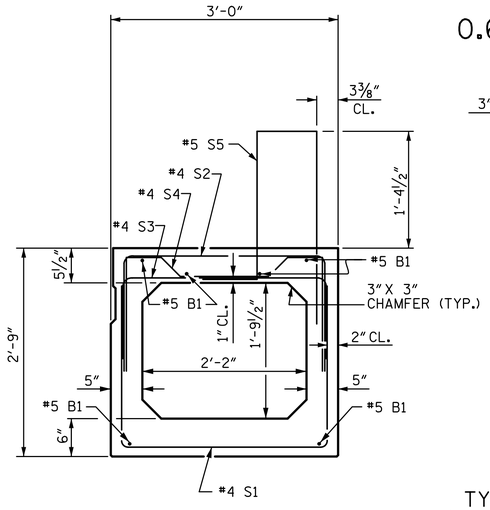

EXTERIOR BOX BEAM SECTION

(STRAND LAYOUT NOT SHOWN)

0.6" Ø LOW RELAXATION STRAND LAYOUT

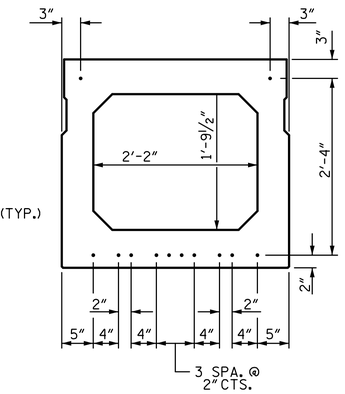

TYPICAL STAND LOCATION

(12 STRANDS REQUIRED)

DEBONDING LEGEND

- FULLY BONDED STRAND

BAR TYPES

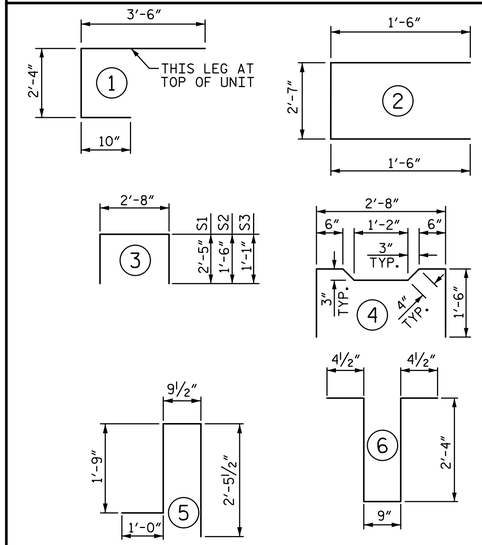

ALL BAR DIMENSIONS ARE OUT TO OUT

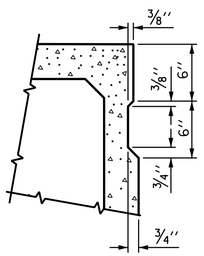

SHEAR KEY DETAIL

NOTE: OMIT SHEAR KEY ON OUTSIDE FACE OF EXTERIOR BOX BEAMS.

BOX BEAM UNITS REQUIRED

	NUMBER	LENGTH	TOTAL LENGTH
EXTERIOR B.B.	4	40'-0"	160'-0"
INTERIOR B.B.	18	40'-0"	720'-0"
TOTAL	22	———	880'-0"

GRADE 270 STRANDS

	0.6" Ø L.R.
AREA (SQUARE INCHES)	0.217
ULTIMATE STRENGTH (LBS. PER STRAND)	58,600
APPLIED PRESTRESS (LBS. PER STRAND)	43,950

DEAD LOAD DEFLECTION AND CAMBER

	3'-0" x 2'-9"
40' BOX BEAM UNIT	0.6" Ø L.R. STRAND
CAMBER (SLAB ALONE IN PLACE)	7⁄16" ↑
DEFLECTION DUE TO SUPERIMPOSED DEAD LOAD**	1⁄16" ↓
FINAL CAMBER	3⁄8" ↑

** INCLUDES FUTURE WEARING SURFACE

BILL OF MATERIAL FOR ONE BOX BEAM SECTION

BAR	NUMBER	SIZE	TYPE	EXTERIOR UNIT LENGTH	EXTERIOR UNIT WEIGHT	INTERIOR UNIT LENGTH	INTERIOR UNIT WEIGHT
A1	10	#5	1	6'-8"	70	6'-8"	70
A2	28	#4	2	5'-7"	104	5'-7"	104
B1	6	#5	STR	38'-8"	242	38'-8"	242
K1	9	#4	6	6'-2"	37	6'-2"	37
K2	6	#4	STR	2'-7"	10	2'-7"	10
S1	39	#4	3	7'-6"	195	7'-6"	195
S2	39	#4	3	5'-8"	148	5'-8"	148
S3	59	#4	3	4'-10"	190	4'-10"	190
S4	20	#4	4	5'-10"	78	5'-10"	78
* S5	54	#5	5	6'-0"	338	--	--
REINFORCING STEEL				1074	LB	1074	LB
* EPOXY COATED REINF. STEEL				338	LB		
5000 P.S.I. CONCRETE				7.5	CY	7.5	CY
0.6" Ø L.R. STRANDS				No. 12		No. 12	

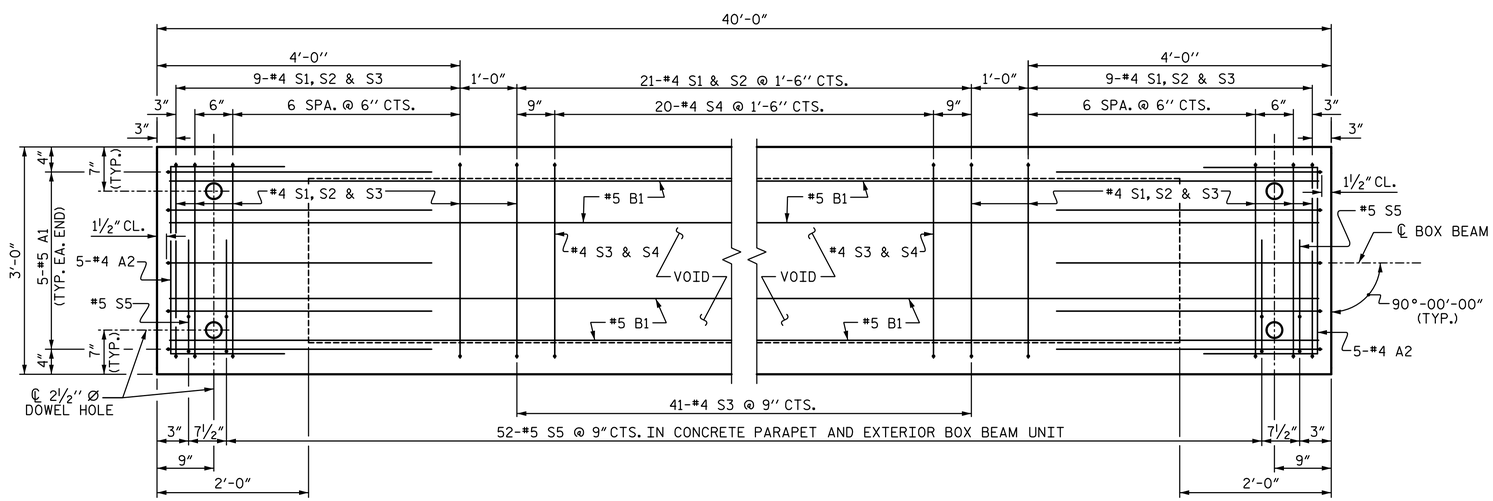

PLAN OF BOX BEAM

EXTERIOR UNIT SHOWN, INTERIOR UNIT SIMILAR EXCEPT OMIT #5 S5 BARS.
FOR LOCATION OF DIAPHRAGMS, SEE "PLAN OF UNIT".
FOR THREADED INSERTS, SEE "THREADED INSERT DETAIL".
FOR REINFORCING STEEL IN DIAPHRAGMS, SEE "DOUBLE DIAPHRAGM DETAILS".

PROJECT NO. 17BP.7.R.101
ROCKINGHAM COUNTY
STATION: 15+60.00 -L-

SHEET 4 OF 6

STATE OF NORTH CAROLINA
DEPARTMENT OF TRANSPORTATION
RALEIGH

SUPERSTRUCTURE
3'-0" X 2'-9"
PRESTRESSED CONCRETE
BOX BEAM UNIT
90° SKEW

PLANS PREPARED BY:
SIMPSON ENGINEERS & ASSOCIATES
5640 Dillard Drive
Suite 200
Cary, NC 27518
(919) 852-0468
(919) 852-0598 (Fax)
www.simpsonengr.com
LICENSURE NO. C-2521

NORTH CAROLINA PROFESSIONAL SEAL 11268 ENGINEER BETSY S. COX
5/24/2017

DOCUMENT NOT CONSIDERED FINAL UNLESS ALL SIGNATURES COMPLETED

REVISIONS						
NO.	BY:	DATE:	NO.	BY:	DATE:	
1			3			
2			4			

SHEET NO. S-8
TOTAL SHEETS 26

DRAWN BY: T. BANKOVICH DATE: 1-17
CHECKED BY: B.S. COX DATE: 1-17
DESIGN ENGINEER OF RECORD: B.S. COX DATE: 1-17

DocuSign Envelope ID: 17E46735-EAB2-424D-AFF4-B5B1F69CCA4F

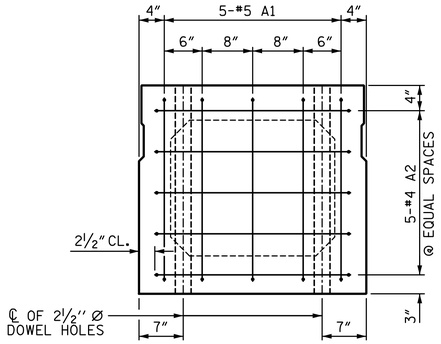

END ELEVATION

SHOWING PLACEMENT OF #5 & #4 "A" BARS AND LOCATION OF DOWEL HOLES. (INTERIOR BOX BEAM SECTION SHOWN-EXTERIOR SECTION SIMILAR EXCEPT SHEAR KEY LOCATION. STRAND LAYOUT NOT SHOWN.)

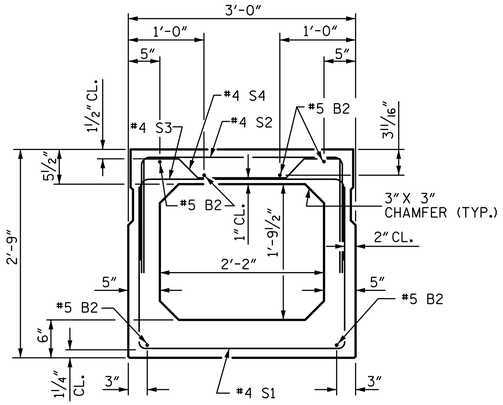

INTERIOR BOX BEAM SECTION

(STRAND LAYOUT NOT SHOWN)

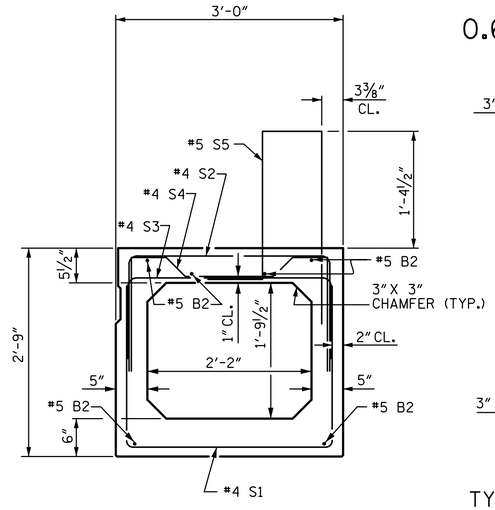

EXTERIOR BOX BEAM SECTION

(STRAND LAYOUT NOT SHOWN)

0.6" Ø LOW RELAXATION STRAND LAYOUT

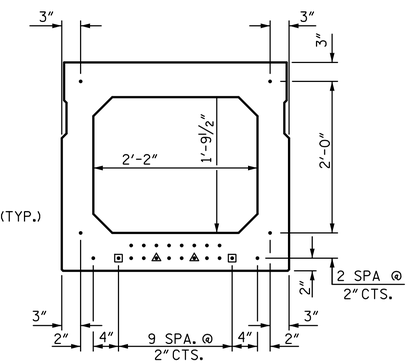

TYPICAL STAND LOCATION

(24 STRANDS REQUIRED)

DEBONDING LEGEND

- ● FULLY BONDED STRAND
- ◬ STRANDS DEBONDED FOR 10'-0" FROM END OF GIRDER
- ▣ STRANDS DEBONDED FOR 4'-0" FROM END OF GIRDER

BOND SHALL BE BROKEN ON STRANDS AS SHOWN FOR THE SPECIFIED LENGTH FROM EACH END OF THE BOX BEAM. SEE STANDARD SPECIFICATIONS ARTICLE 1078-7.

BAR TYPES

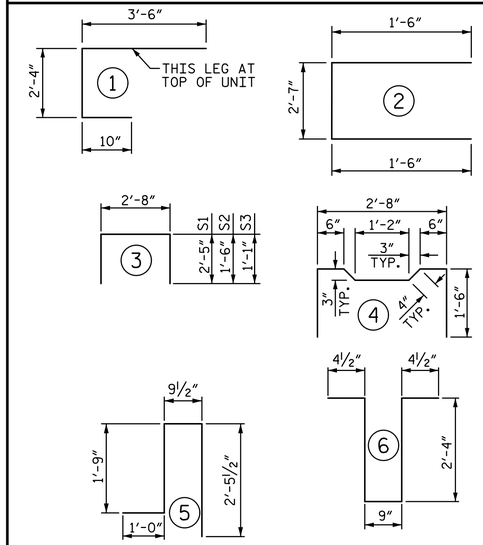

ALL BAR DIMENSIONS ARE OUT TO OUT

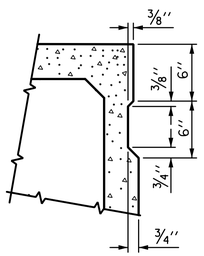

SHEAR KEY DETAIL

NOTE: OMIT SHEAR KEY ON OUTSIDE FACE OF EXTERIOR BOX BEAMS.

BOX BEAM UNITS REQUIRED

	NUMBER	LENGTH	TOTAL LENGTH
EXTERIOR B.B.	2	80'-0"	160'-0"
INTERIOR B.B.	9	80'-0"	720'-0"
TOTAL	11	———	880'-0"

DEAD LOAD DEFLECTION AND CAMBER

	3'-0" x 2'-9"
80' BOX BEAM UNIT	0.6" Ø L.R. STRAND
CAMBER (SLAB ALONE IN PLACE)	1¾" ↑
DEFLECTION DUE TO SUPERIMPOSED DEAD LOAD**	½" ↓
FINAL CAMBER	1¼" ↑

** INCLUDES FUTURE WEARING SURFACE

GRADE 270 STRANDS

	0.6" Ø L.R.
AREA (SQUARE INCHES)	0.217
ULTIMATE STRENGTH (LBS. PER STRAND)	58,600
APPLIED PRESTRESS (LBS. PER STRAND)	43,950

BILL OF MATERIAL FOR ONE BOX BEAM SECTION

				EXTERIOR UNIT		INTERIOR UNIT	
BAR	NUMBER	SIZE	TYPE	LENGTH	WEIGHT	LENGTH	WEIGHT
A1	10	#5	1	6'-8"	70	6'-8"	70
A2	34	#4	2	5'-7"	127	5'-7"	127
B2	12	#5	STR	40'-11"	512	40'-11"	512
K1	12	#4	6	6'-2"	49	6'-2"	49
K2	8	#4	STR	2'-7"	14	2'-7"	14
S1	66	#4	3	7'-6"	331	7'-6"	331
S2	66	#4	3	5'-8"	250	5'-8"	250
S3	113	#4	3	4'-10"	365	4'-10"	365
S4	47	#4	4	5'-10"	183	5'-10"	183
* S5	107	#5	5	6'-0"	670	--	--
REINFORCING STEEL				1901	LBS.	1901	LBS.
* EPOXY COATED REINF. STEEL				670	LBS.		
8000 P.S.I. CONCRETE				14.2	CU. YDS.	14.1	CU. YDS.
0.6" Ø L.R. STRANDS				No. 24		No. 24	

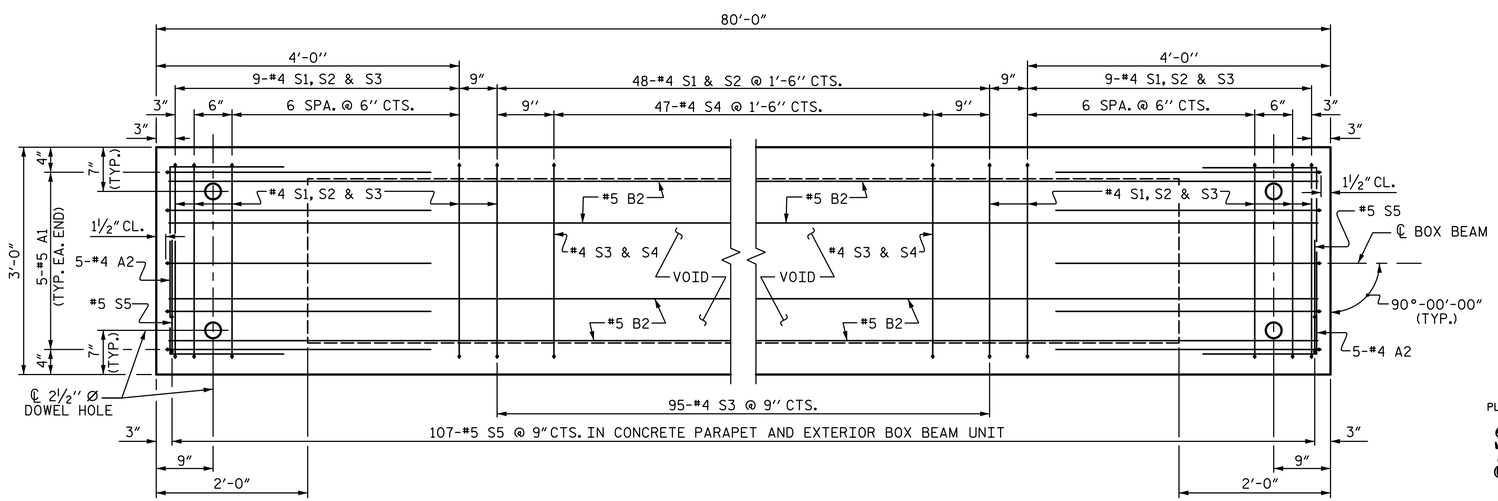

PLAN OF BOX BEAM

EXTERIOR UNIT SHOWN, INTERIOR UNIT SIMILAR EXCEPT OMIT #5 S5 BARS.
FOR LOCATION OF DIAPHRAGMS, SEE "PLAN OF UNIT".
FOR THREADED INSERTS, SEE "THREADED INSERT DETAIL".
FOR REINFORCING STEEL IN DIAPHRAGMS, SEE "DOUBLE DIAPHRAGM DETAILS".

PROJECT NO. 17BP.7.R.101
ROCKINGHAM COUNTY
STATION: 15+60.00 -L-

SHEET 5 OF 6

STATE OF NORTH CAROLINA
DEPARTMENT OF TRANSPORTATION
RALEIGH

SUPERSTRUCTURE
3'-0" X 2'-9"
PRESTRESSED CONCRETE
BOX BEAM UNIT
90° SKEW

PLANS PREPARED BY:
SIMPSON ENGINEERS & ASSOCIATES
5640 Dillard Drive
Suite 200
Cary, NC 27518
(919) 852-0468
(919) 852-0598 (Fax)
www.simpsonengr.com
LICENSURE NO. C-2521

NORTH CAROLINA PROFESSIONAL SEAL 11268 ENGINEER BETSY S. COX
5/24/2017

DOCUMENT NOT CONSIDERED FINAL UNLESS ALL SIGNATURES COMPLETED

REVISIONS						SHEET NO.
NO.	BY:	DATE:	NO.	BY:	DATE:	S-9
1			3			TOTAL SHEETS
2			4			26

DRAWN BY: T. BANKOVICH DATE: 1-17
CHECKED BY: B.S. COX DATE: 1-17
DESIGN ENGINEER OF RECORD: B.S. COX DATE: 1-17

5/24/2017 7:24:20 AM G:\Projects\2015\Division 7 (Hatch Mott)\17BP7R101 (Rockingham 39) (90 33BBU 2BMR)\Structures\Drawings\Final\401_17BP7R101_SMU_SUPER.dgn

DocuSign Envelope ID: 17E46735-EAB2-424D-AFF4-B5B1F69CCA4F

5/24/2017 7:24:20 AM G:\Projects\2015\Division 7 (Hatch Mott)\17BP7R101 (Rockingham 39)(90 33BBU 2BMR)\Structures\Drawings\Final\401_17BP7R101_SMU_SUPER.dgn

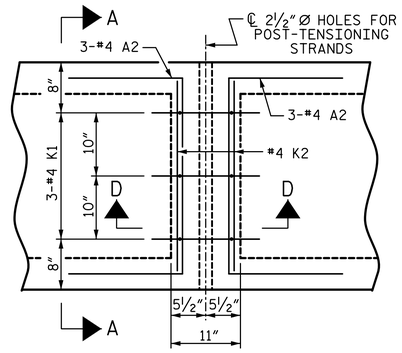

PLAN

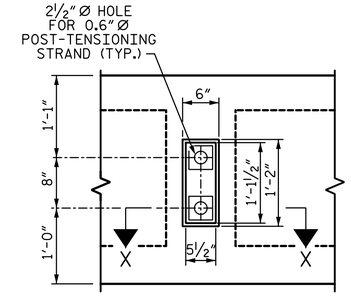

VIEW Y-Y

SHOWING ELEVATION VIEW OF GROUTED RECESS

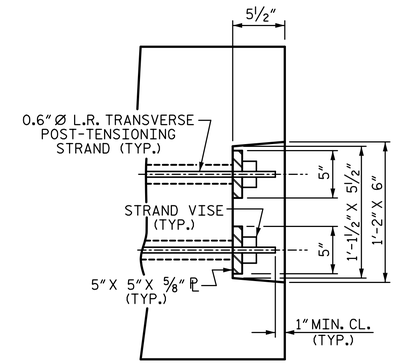

DETAIL "C"

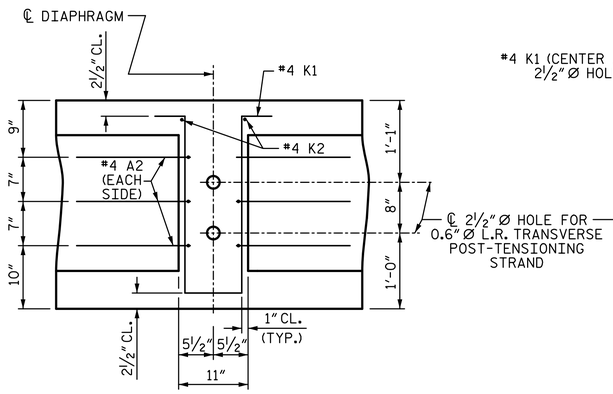

SECTION D-D

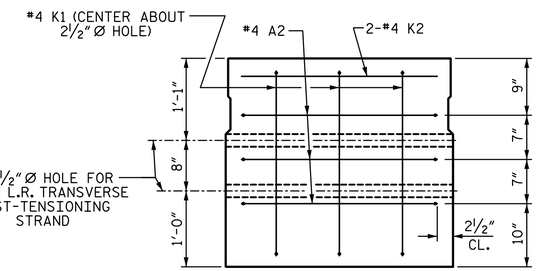

SECTION A-A

VOIDS NOT SHOWN

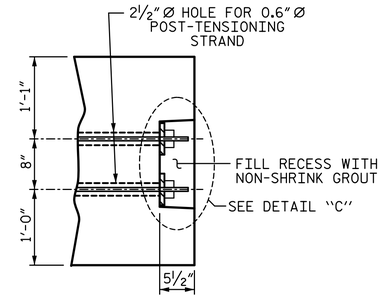

PART SECTION AT RECESS

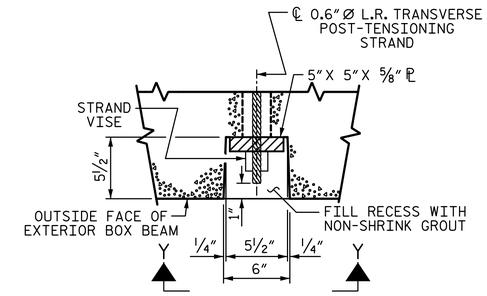

SECTION X-X

SHOWING PLAN VIEW OF GROUTED RECESS

DOUBLE DIAPHRAGM DETAILS

#4 "S" BARS NOT SHOWN. #4 "S" BARS MAY BE SHIFTED SLIGHTLY TO CLEAR 2½" Ø HOLE.

GROUTED RECESS DETAIL AT END OF POST-TENSIONED STRANDS OF EXTERIOR BOX BEAM

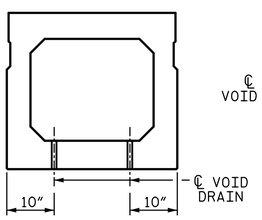

SECTION B-B

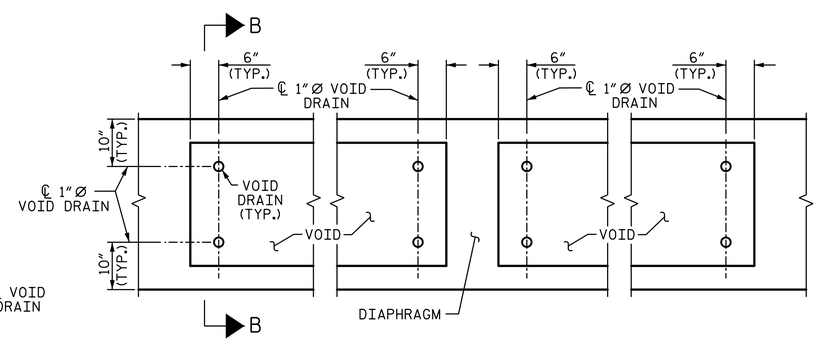

PART PLAN

VOID DRAIN DETAILS

(DIMENSIONS SHOWN ARE TYPICAL FOR EACH VOID)

PROJECT NO. 17BP.7.R.101

ROCKINGHAM COUNTY

STATION: 15+60.00 -L-

SHEET 6 OF 6

STATE OF NORTH CAROLINA
DEPARTMENT OF TRANSPORTATION
RALEIGH

SUPERSTRUCTURE

3'-0" X 2'-9"
PRESTRESSED CONCRETE
BOX BEAM UNIT

90° SKEW

PLANS PREPARED BY:
SIMPSON ENGINEERS & ASSOCIATES
5640 Dillard Drive
Suite 200
Cary, NC 27518
(919) 852-0468
(919) 852-0598 (Fax)
www.simpsonengr.com
LICENSURE NO. C-2521

NORTH CAROLINA PROFESSIONAL SEAL 11268 ENGINEER BETSY S. COX
DocuSigned by: Betsy Cox
5/24/2017

DOCUMENT NOT CONSIDERED FINAL UNLESS ALL SIGNATURES COMPLETED

REVISIONS								SHEET NO.
NO.	BY:	DATE:	NO.	BY:	DATE:			S-10
1			3					TOTAL SHEETS
2			4					26

DRAWN BY:	T. BANKOVICH	DATE:	1-17
CHECKED BY:	B.S. COX	DATE:	1-17
DESIGN ENGINEER OF RECORD:	B.S. COX	DATE:	1-17

DocuSign Envelope ID: 17E46735-EAB2-424D-AFF4-B5B1F69CCA4F

5/24/2017 7:24:20 AM G:\Projects\2015\Division 7 (Hatch Mott)\17BP7R101 (Rockingham 39)(90 33BBU 2BMR)\Structures\Drawings\Final\401_17BP7R101_SMU_SUPER.dgn

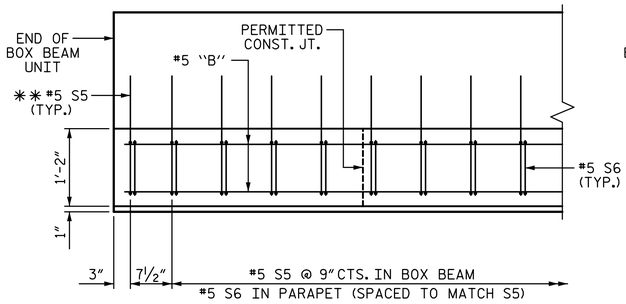

PLAN OF PARAPET

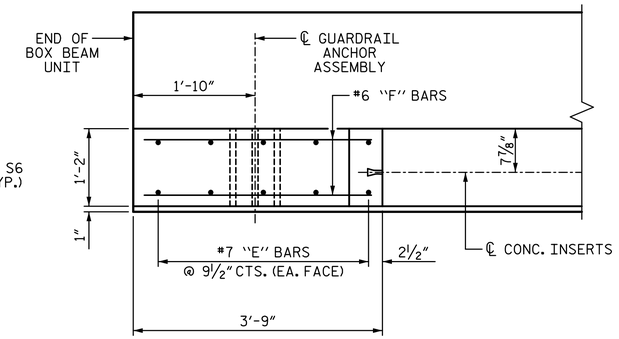

PLAN OF END POST

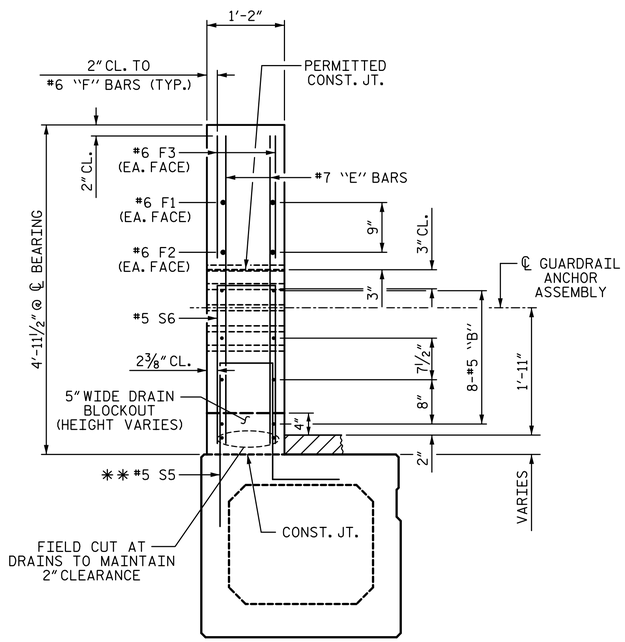

END VIEW

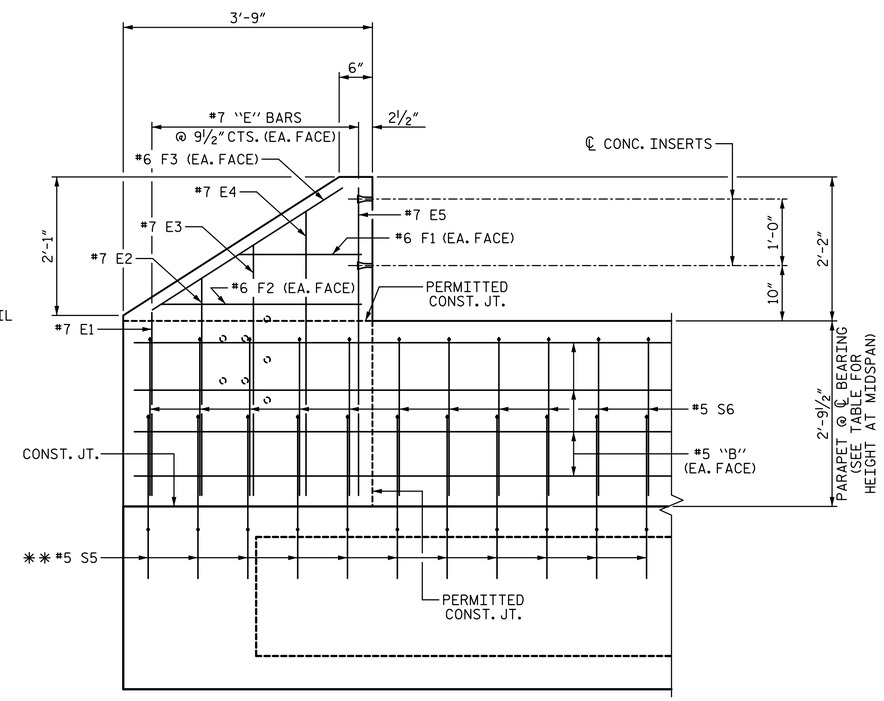

ELEVATION

PARAPET AND END POST FOR TWO BAR RAIL

✱✱#5 S5 BARS ARE INCLUDED IN BILL OF MATERIAL FOR BOX BEAM FOR LOCATIONS OF DECK DRAINS, SEE "PLAN OF SPAN" SHEETS.

GUTTERLINE ASPHALT THICKNESS & PARAPET HEIGHT

	ASPHALT OVERLAY THICKNESS @ MID-SPAN	PARAPET HEIGHT @ MID-SPAN
40' UNITS	3⅛"	2'-9⅛"
80' UNITS	2¼"	2'-8¼"

BAR TYPES

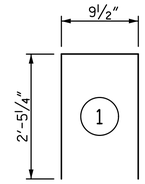

BILL OF MATERIAL
PARAPET AND END POSTS

BAR	NO.	SIZE	TYPE	LENGTH	WEIGHT
✱B7	64	#5	STR	19'-7"	1307
✱B8	48	#5	STR	26'-1"	1306
✱E1	8	#7	STR	2'-11"	48
✱E2	8	#7	STR	3'-4"	55
✱E3	8	#7	STR	3'-10"	63
✱E4	8	#7	STR	4'-4"	71
✱E5	8	#7	STR	4'-9"	78
✱F1	8	#6	STR	1'-11"	23
✱F2	8	#6	STR	3'-1"	37
✱F3	8	#6	STR	4'-0"	48
✱S6	430	#5	1	5'-8"	2541

✱EPOXY COATED REINFORCING STEEL 5577 LB

CLASS AA CONCRETE 38.9 CY

1'-2" X 2'-9½" CONCRETE PARAPET 320.5 LF

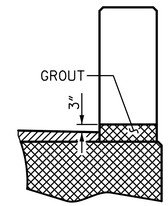

SECTION T-T

AT OPEN JOINT AT BENT (THIS IS TO BE USED WHERE FOAM JOINT IS NOT USED)

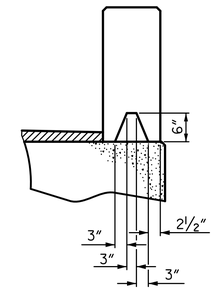

SECTION S-S

AT DAM IN OPEN JOINT (THIS IS TO BE USED ONLY WHEN SLIP FORM IS USED)

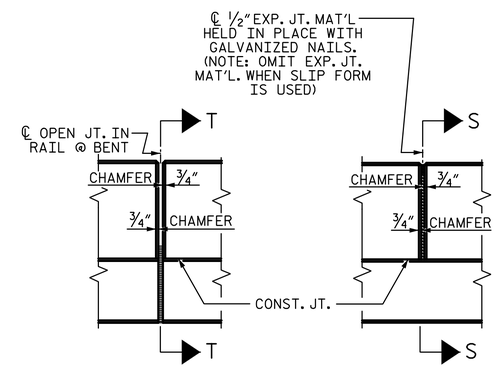

ELEVATION AT EXPANSION JOINTS

PROJECT NO. 17BP.7.R.101
ROCKINGHAM COUNTY
STATION: 15+60.00 -L-

STATE OF NORTH CAROLINA
DEPARTMENT OF TRANSPORTATION
RALEIGH

SUPERSTRUCTURE

CONCRETE PARAPET DETAILS FOR 2 BAR METAL RAIL

PLANS PREPARED BY:

SIMPSON ENGINEERS & ASSOCIATES
5640 Dillard Drive
Suite 200
Cary, NC 27518
(919) 852-0468
(919) 852-0598 (Fax)
www.simpsonengr.com
LICENSURE NO. C-2521

NORTH CAROLINA PROFESSIONAL SEAL 21268 ENGINEER BETSY S. COX
5/24/2017

DOCUMENT NOT CONSIDERED FINAL UNLESS ALL SIGNATURES COMPLETED

REVISIONS						
NO.	BY:	DATE:	NO.	BY:	DATE:	
1			3			
2			4			

SHEET NO. S-11
TOTAL SHEETS 26

DRAWN BY: T. BANKOVICH DATE: 1-17
CHECKED BY: B.S. COX DATE: 1-17
DESIGN ENGINEER OF RECORD: B.S. COX DATE: 1-17

DocuSign Envelope ID: 17E46735-EAB2-424D-AFF4-B5B1F69CCA4F

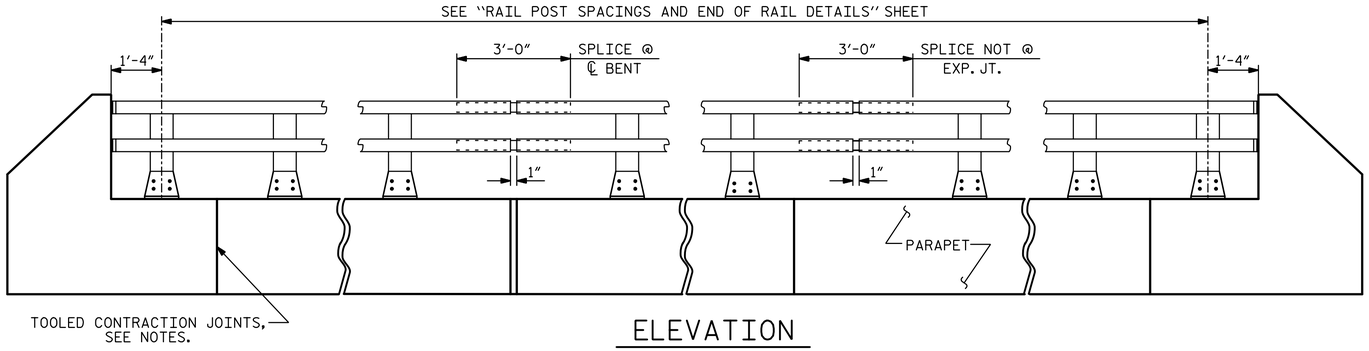

ELEVATION

NOTE : FOR ATTACHMENT OF METAL RAIL TO END POST, SEE "RAIL POST SPACING AND END OF RAIL DETAILS" SHEET.

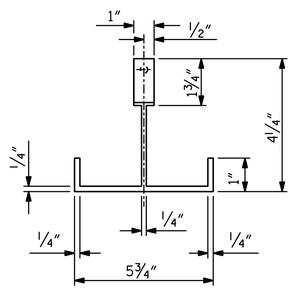

PLAN

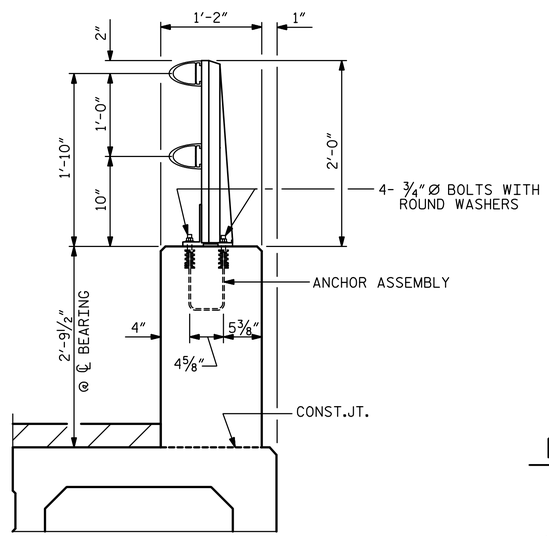

SECTION THRU PARAPET AND RAIL

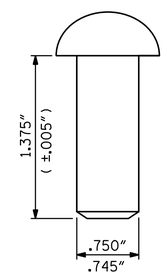

RIVET DETAIL

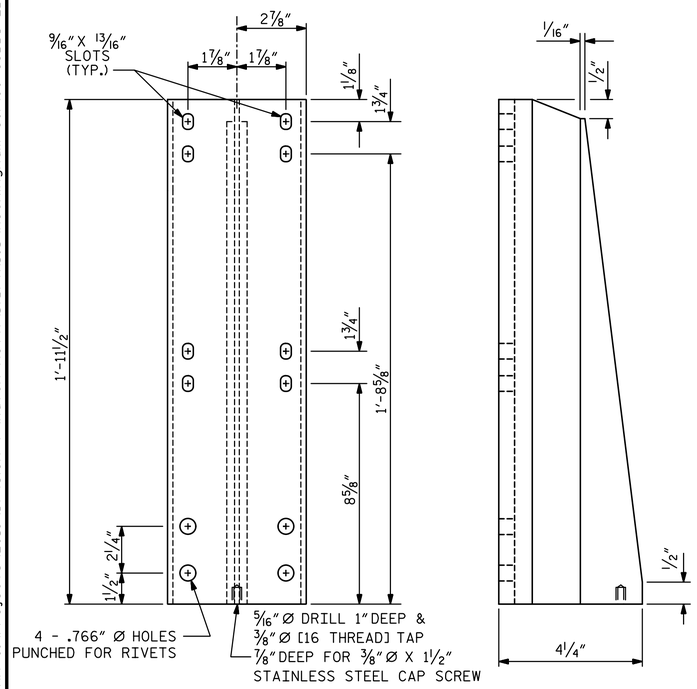

FRONT ELEVATION

SIDE ELEVATION

DETAILS OF POST

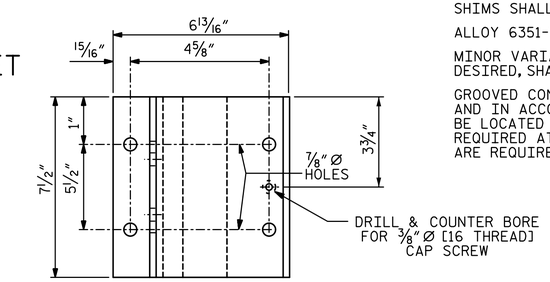

PLAN

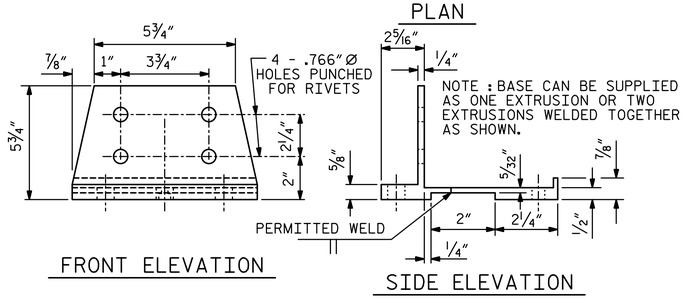

FRONT ELEVATION

SIDE ELEVATION

POST BASE DETAILS

NOTES:

AT THE CONTRACTOR'S OPTION, METAL RAIL MAY BE EITHER ALUMINUM OR GALVANIZED STEEL IN ACCORDANCE WITH THE REQUIREMENTS OF THE GENERAL NOTES AND THE FOLLOWING SPECIFICATIONS FOR THE ALTERNATE MATERIALS; HOWEVER, THE CONTRACTOR WILL BE REQUIRED TO USE THE SAME RAIL MATERIAL ON ALL STRUCTURES ON THE PROJECT FOR WHICH METAL RAIL IS DESIGNATED.

UNLESS OTHERWISE REQUIRED IN THE CONTRACT DOCUMENTS, THE CONTRACTOR HAS THE OPTION TO USE AN ALTERNATE TO THE 2 BAR METAL RAIL. THE ALTERNATE RAIL SHALL MEET THE REQUIREMENTS OF THE AASHTO LRFDBRIDGE DESIGN SPECIFICATIONS AND MUST BE LISTED ON THE DEPARTMENT'S APPROVED PRODUCTS LIST (APL) UNDER "2 BAR METAL RAIL ALTERNATE". ADJUSTMENTS TO THE CONCRETE PARAPET WILL NOT BE ALLOWED.

ALUMINUM RAILS:

MATERIAL FOR POSTS, BASES AND RAILS, EXPANSION BARS AND CLAMP BARS SHALL BE ASTM B-221 ALLOY 6061-T6.

MATERIAL FOR RIVETS SHALL BE ASTM B316 ALLOY 6061-T6. RIVETS SHALL BE STANDARD BUTTON HEAD AND CONE POINT COLD DRIVEN AS PER DRAWING.

THE BASE OF RAIL POSTS, OR ANY OTHER ALUMINUM SURFACE IN CONTACT WITH CONCRETE SHALL BE THOROUGHLY COATED WITH AN ALUMINUM IMPREGNATED CAULKING COMPOUND OF APPROVED QUALITY.

MATERIAL FOR SHIMS TO BE ASTM B209 ALLOY 6061-T6.

GALVANIZED STEEL RAILS:

MATERIAL AND GALVANIZING ARE TO CONFORM TO THE FOLLOWING SPECIFICATIONS:

POST, POST BASES, RAILS, EXPANSION BARS AND CLAMP BARS: AASHTO M270 GRADE 36 STRUCTURAL STEEL - GALVANIZED TO AASHTO M111.

RIVETS: RIVETS SHALL MEET THE REQUIREMENTS OF ASTM A502 FOR GRADE 1 RIVETS.

THE CUT ENDS OF GALVANIZED STEEL RAILING, AFTER GRINDING SMOOTH SHALL BE GIVEN TWO COATS OF ZINC RICH PAINT MEETING THE REQUIREMENTS OF FEDERAL SPECIFICATION MIL-P-26915 USAF TYPE 1, OR OF FEDERAL SPECIFICATIONS TT-P-641.

SHIMS: SHIMS SHALL MEET THE REQUIREMENTS OF ASTM A570 FOR GRADE 33 OR A611 FOR GRADE C AND SHALL BE GALVANIZED IN ACCORDANCE WITH AASHTO M111.

RAIL CAPS: RAIL CAPS SHALL MEET THE REQUIREMENTS OF ASTM A570 FOR GRADE 33 OR A611 FOR GRADE C AND SHALL BE GALVANIZED IN ACCORDANCE WITH AASHTO M111.

GENERAL NOTES:

RAILING SHALL BE CONTINUOUS FROM END POST TO END POST OF BRIDGE. EACH JOINT IN RAIL LENGTH SHALL BE SPLICED AS DETAILED. PANEL LENGTHS OF RAIL SHALL BE ATTACHED TO A MINIMUM OF THREE POSTS.

FOR END OF RAIL TO CLEAR FACE OF CONCRETE END POST DIMENSION, SEE "RAIL POST SPACING AND END OF RAIL DETAILS" SHEET.

CAP SCREWS SHALL BE ASTM F593 ALLOY 305 STAINLESS STEEL. WASHERS SHALL MEET THE REQUIREMENTS OF ASTM F844 EXCEPT THEY SHALL BE MADE FROM ALLOY 304 STAINLESS STEEL.

CERTIFIED MILL REPORTS ARE REQUIRED FOR RAILS AND POSTS. SHOP INSPECTION IS NOT REQUIRED.

METAL RAIL POSTS SHALL BE SET NORMAL TO CURB GRADE.

METHOD OF MEASUREMENT FOR METAL RAILS: FOR LENGTH OF METAL RAILS TO BE PAID FOR, SEE THE STANDARD SPECIFICATIONS.

CURVED RAIL USAGE: WHERE RAILS ARE TO BE USED ON BRIDGES ON HORIZONTAL AND/OR VERTICAL CURVATURE THE CONTRACTOR MAY, AT HIS OPTION, HAVE THE REQUIRED CURVATURE IN THE RAIL FORMED IN THE SHOP OR IN THE FIELD. IN EITHER EVENT, THE RAIL SHALL CONFORM WITHOUT BUCKLING OR KINKING TO THE REQUIRED CURVATURE IN A UNIFORM MANNER ACCEPTABLE TO THE ENGINEER.

TO INSURE FUTURE IDENTIFICATION OF THE FABRICATOR, A PERMANENT IDENTIFYING MARK SHALL BE PLACED ON EACH POST. THE METHOD OF MARKING AND LOCATION SHALL BE SUCH THAT IT DOES NOT DETRACT FROM THE APPEARANCE OF THE POST, BUT REMAINS VISIBLE AFTER RAIL PLACEMENT.

SHIMS SHALL BE USED AS NECESSARY FOR POST ALIGNMENT.

ALLOY 6351-T5 MAY BE SUBSTITUTED FOR ALLOY 6061-T6 WHERE APPLICABLE.

MINOR VARIATIONS IN DETAILS OF METAL RAIL WILL BE CONSIDERED. DETAILS OF SUCH VARIATIONS, IF DESIRED, SHALL BE SUBMITTED FOR APPROVAL.

GROOVED CONTRACTION JOINTS, 1/2" IN DEPTH, SHALL BE TOOLED IN ALL EXPOSED FACES OF THE PARAPET AND IN ACCORDANCE WITH ARTICLE 825-10(B) OF THE STANDARD SPECIFICATIONS. A CONTRACTION JOINT SHALL BE LOCATED AT EACH THIRD POINT BETWEEN PARAPET EXPANSION JOINTS. ONLY ONE CONTRACTION JOINT IS REQUIRED AT MIDPOINT OF PARAPET SEGMENTS LESS THAN 20 FEET IN LENGTH AND NO CONTRACTION JOINTS ARE REQUIRED FOR THOSE SEGMENTS LESS THAN 10 FEET IN LENGTH.

PAY LENGTH = 305.50 LF

PROJECT NO. 17BP.7.R.101

ROCKINGHAM COUNTY

STATION: 15+60.00 -L-

SHEET 1 OF 2

STATE OF NORTH CAROLINA
DEPARTMENT OF TRANSPORTATION
RALEIGH

SUPERSTRUCTURE

2 BAR METAL RAIL

DRAWN BY: T. BANKOVICH	DATE: 1-17	
CHECKED BY: B.S. COX	DATE: 1-17	
DESIGN ENGINEER OF RECORD: B.S. COX	DATE: 1-17	

PLANS PREPARED BY:

SIMPSON ENGINEERS & ASSOCIATES
5640 Dillard Drive
Suite 200
Cary, NC 27518
(919) 852-0468
(919) 852-0598 (Fax)
www.simpsonengr.com
LICENSURE NO. C-2521

NORTH CAROLINA PROFESSIONAL SEAL 11268 ENGINEER BETSY S. COX
DocuSigned by:
5/24/2017

DOCUMENT NOT CONSIDERED FINAL UNLESS ALL SIGNATURES COMPLETED

REVISIONS						SHEET NO.
NO.	BY:	DATE:	NO.	BY:	DATE:	S-12
1			3			TOTAL SHEETS
2			4			26

5/24/2017 7:24:20 AM G:\Projects\2015\Division 7 (Hatch Mott)\17BP7R101 (Rockingham 39)(90 33BBU 2BMR)\Structures\Drawings\Final\401_17BP7R101_SMU_SUPER.dgn

DocuSign Envelope ID: 17E46735-EAB2-424D-AFF4-B5B1F69CCA4F

5/24/2017 7:24:20 AM G:\Projects\2015\Division 7 (Hatch Mott)\17BP7R101 (Rockingham 39)(90 33BBU 2BMR)\Structures\Drawings\Final\401_17BP7R101_SMU_SUPER.dgn

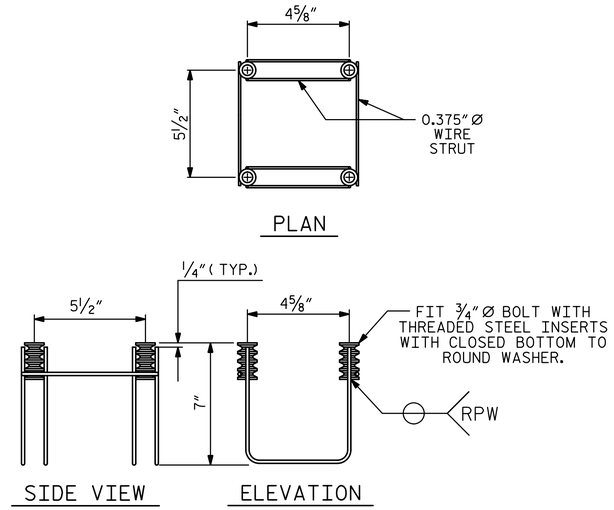

4-BOLT METAL RAIL ANCHOR ASSEMBLY

(62 ASSEMBLIES REQUIRED)

STRUCTURAL CONCRETE ANCHOR ASSEMBLY NOTES:

THE STRUCTURAL CONCRETE ANCHOR ASSEMBLY SHALL CONSIST OF THE FOLLOWING COMPONENTS :

A. FERRULES SHALL BE MADE FROM STEEL MEETING THE REQUIREMENTS OF AASHTO M169, GRADE 12L14 AND SHALL HAVE A MINIMUM LENGTH OF THREADS OF 2" FOR 3/4" FERRULES.

B. 4 - 3/4" Ø X 2 1/2" BOLTS WITH WASHERS. BOLTS SHALL CONFORM TO THE REQUIREMENTS OF ASTM A307. BOLTS AND WASHERS SHALL BE GALVANIZED. AT THE CONTRACTOR'S OPTION, STAINLESS STEEL BOLTS AND WASHERS MAY BE USED AS AN ALTERNATE FOR THE 3/4" Ø X 2 1/2" GALVANIZED BOLTS AND WASHERS. THEY SHALL CONFORM TO OR EXCEED THE MECHANICAL REQUIREMENTS OF ASTM A307. THE USE OF THIS ALTERNATE SHALL BE APPROVED BY THE ENGINEER.

C. WIRE STRUT SHOWN IN THE CONCRETE ANCHOR ASSEMBLY DETAIL IS THE MINIMUM ALLOWABLE SIZE AND SHALL HAVE A MINIMUM TENSILE STRENGTH OF 100,000 PSI. AS AN OPTION, A 7/16" Ø WIRE STRUT WITH A MINIMUM TENSILE STRENGTH OF 90,000 PSI IS ACCEPTABLE.

D. THE METAL RAIL ANCHOR ASSEMBLIES TO BE HOT DIPPED GALVANIZED TO CONFORM TO REQUIREMENTS OF AASHTO M111.

E. THE COST OF THE METAL RAIL ANCHOR ASSEMBLY WITH BOLTS AND WASHERS COMPLETE IN PLACE SHALL BE INCLUDED IN THE PRICE BID FOR LINEAR FEET OF METAL RAIL.

F. BOLTS TO BE TIGHTENED ONE-HALF TURN WITH A WRENCH FROM A FINGER-TIGHT POSITION.

THE CONTRACTOR MAY USE ADHESIVELY ANCHORED ANCHOR BOLTS IN PLACE OF THE METAL RAIL ANCHOR ASSEMBLY. LEVEL ONE FIELD TESTING IS REQUIRED, AND THE YIELD LOAD OF THE 3/4" Ø BOLT IS 10 KIPS. FOR ADHESIVELY ANCHORED ANCHOR BOLTS OR DOWELS, SEE THE STANDARD SPECIFICATIONS.

WHEN ADHESIVELY ANCHORED ANCHOR BOLTS ARE USED, BOLTS SHALL MEET THE REQUIREMENTS OF ASTM F593 ALLOY 304 STAINLESS STEEL WITH MINIMUM 75,000 PSI ULTIMATE STRENGTH. NUTS SHALL MEET THE REQUIREMENTS OF ASTM F594 ALLOY 304 STAINLESS STEEL AND WASHERS SHALL MEET THE REQUIREMENTS OF ASTM F844 EXCEPT THEY SHALL BE MADE FROM ALLOY 304 STAINLESS STEEL.

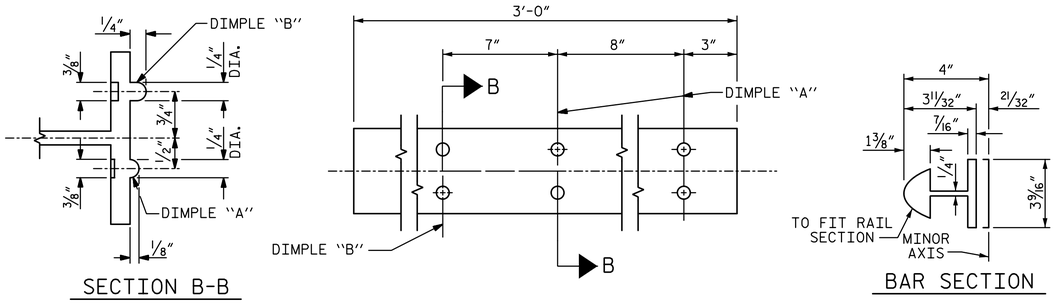

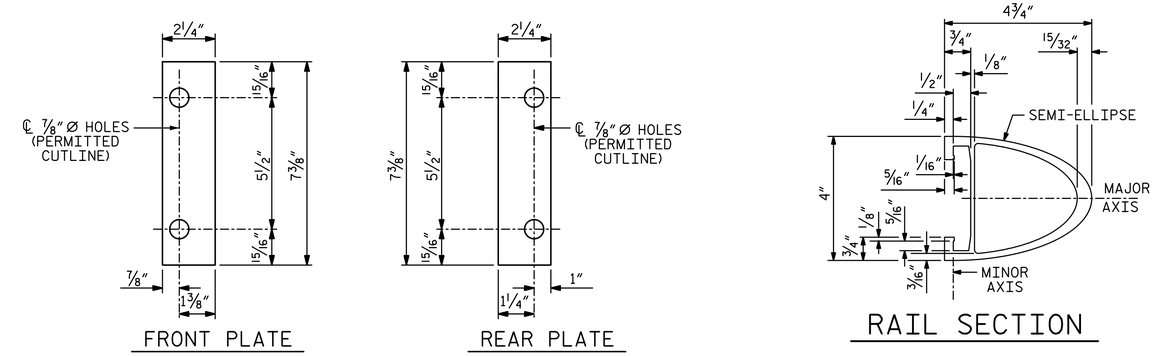

SHIM DETAILS

NOTE :
SHIMS MAY BE CUT ALONG PERMITTED CUTLINE OR SLOTTED TO EDGE OF PLATE TO FACILITATE PLACEMENT.

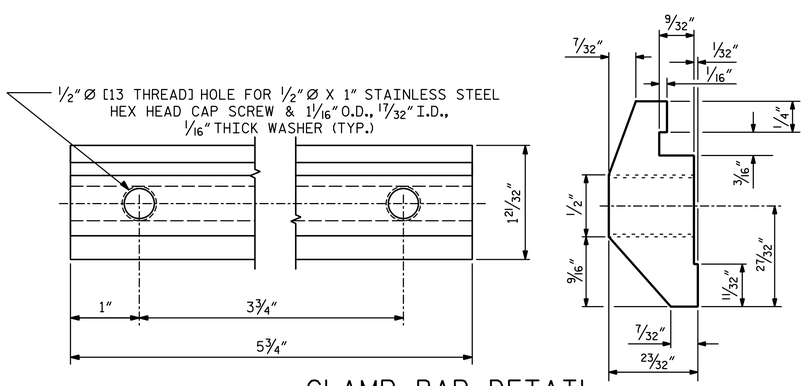

CLAMP BAR DETAIL

(4 REQUIRED PER POST)

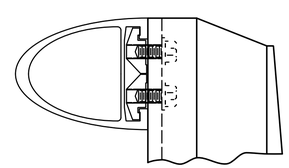

CLAMP ASSEMBLY

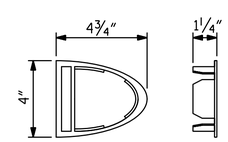

RAIL CAP

PROJECT NO. 17BP.7.R.101

ROCKINGHAM COUNTY

STATION: 15+60.00 -L-

SHEET 2 OF 2

STATE OF NORTH CAROLINA
DEPARTMENT OF TRANSPORTATION
RALEIGH
SUPERSTRUCTURE

2 BAR METAL RAIL

PLANS PREPARED BY:

SIMPSON ENGINEERS & ASSOCIATES
5640 Dillard Drive
Suite 200
Cary, NC 27518
(919) 852-0468
(919) 852-0598 (Fax)
www.simpsonengr.com
LICENSURE NO. C-2521

NORTH CAROLINA PROFESSIONAL SEAL ENGINEER BETSY S. COX 5/24/2017

DOCUMENT NOT CONSIDERED FINAL UNLESS ALL SIGNATURES COMPLETED

REVISIONS						SHEET NO.
NO.	BY:	DATE:	NO.	BY:	DATE:	S-13
1			3			TOTAL SHEETS
2			4			26

DRAWN BY:	T. BANKOVICH	DATE:	1-17
CHECKED BY:	B.S. COX	DATE:	1-17
DESIGN ENGINEER OF RECORD:	B.S. COX	DATE:	1-17

DocuSign Envelope ID: 17E46735-EAB2-424D-AFF4-B5B1F69CCA4F

5/24/2017 7:24:21 AM G:\Projects\2015\Division 7 (Hatch Mott)\17BP7R101 (Rockingham 39)(90 33BBU 2BMR)\Structures\Drawings\Final\401_17BP7R101_SMU_SUPER.dgn

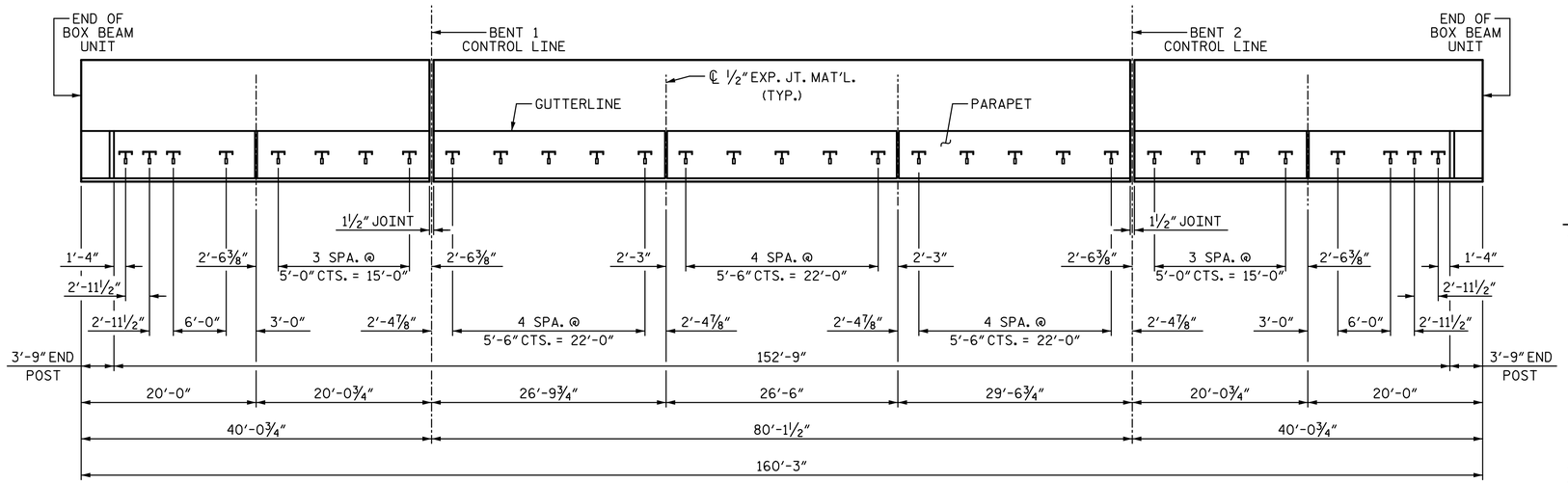

PLAN OF RAIL POST SPACING

(RIGHT EXTERIOR UNIT SHOWN, LEFT EXTERIOR UNIT SIMILAR)

STRUCTURAL CONCRETE INSERT NOTES:

THE STRUCTURAL CONCRETE INSERT ASSEMBLY SHALL CONSIST OF THE FOLLOWING COMPONENTS:

A. FERRULES SHALL BE MADE FROM STEEL MEETING THE REQUIREMENTS OF AASHTO M169, GRADE 12L14 AND SHALL HAVE A MINIMUM LENGTH OF THREADS OF 1 1/2".

B. 1 -3/4" Ø X 1 5/8" BOLT WITH WASHER. BOLT SHALL CONFORM TO THE REQUIREMENTS OF ASTM A307. BOLT AND WASHER SHALL BE GALVANIZED. (AT THE CONTRACTOR'S OPTION, STAINLESS STEEL BOLT AND WASHER MAY BE USED AS AN ALTERNATE FOR THE 3/4" Ø X 1 5/8" GALVANIZED BOLT AND WASHER. THEY SHALL CONFORM TO OR EXCEED THE MECHANICAL REQUIREMENTS OF ASTM A307. THE USE OF THIS ALTERNATE SHALL BE APPROVED BY THE ENGINEER.)

C. WIRE STRUT SHOWN IN THE CONCRETE INSERT ASSEMBLY DETAIL IS THE MINIMUM ALLOWABLE SIZE AND SHALL HAVE A MINIMUM TENSILE STRENGTH OF 100,000 PSI. AS AN OPTION, A 7/16" Ø WIRE STRUT WITH A MINIMUM TENSILE STRENGTH OF 90,000 PSI IS ACCEPTABLE.

METAL RAIL TO END POST CONNECTION NOTES:

THE METAL RAIL TO END POST CONNECTION SHALL CONSIST OF THE FOLLOWING COMPONENTS:

A. 1/2" PLATES SHALL CONFORM TO AASHTO M270 GRADE 36 AND SHALL BE GALVANIZED AFTER FABRICATION.

B. 3/4" STRUCTURAL CONCRETE INSERT SHALL HAVE A WORKING LOAD SHEAR CAPACITY OF 4800 LBS. THE FERRULES SHALL ENGAGE A 3/4" Ø X 1 5/8" BOLT WITH 2" O.D. WASHER IN PLACE. THE 3/4" Ø X 1 5/8" BOLT SHALL HAVE N. C. THREADS.

C. CAP SCREWS FOR RAIL ATTACHMENT TO ANGLE SHALL CONFORM TO THE REQUIREMENTS OF ASTM F593 ALLOY 305 STAINLESS STEEL. CAP SCREWS TO BE CENTERED IN SLOTS AT 60°F.

D. STANDARD CLAMP BARS (SEE METAL RAIL SHEET).

E. 1/2" Ø PIPE SLEEVES (IF REQUIRED) TO BE GALVANIZED.

THE COST OF THE STANDARD CLAMP BARS AND CAP SCREWS USED IN THE METAL RAIL TO END POST CONNECTION SHALL BE INCLUDED IN THE UNIT CONTRACT PRICE BID FOR LINEAR FEET OF 1 OR 2 BAR METAL RAILS.

THE 3/4" STRUCTURAL CONCRETE INSERT WITH BOLT SHALL BE ASSEMBLED IN THE SHOP.

THE COST OF THE 3/4" STRUCTURAL CONCRETE INSERT ASSEMBLY, AND THE 1/2" PLATES COMPLETE IN PLACE SHALL BE INCLUDED IN THE VARIOUS PAY ITEMS.

THE CONTRACTOR, AT HIS OPTION, MAY USE AN ADHESIVE BONDING SYSTEM IN LIEU OF THE STRUCTURAL CONCRETE INSERT EMBEDDED IN THE END POST. IF THE ADHESIVE BONDING SYSTEM IS USED, THE 3/4" Ø X 1 5/8" BOLT WITH WASHER SHALL BE REPLACED WITH A 3/4" Ø X 6 1/2" BOLT AND 2'' O.D. WASHER. ALL SPECIFICATIONS THAT APPLY TO THE 3/4" Ø X 1 5/8" BOLT SHALL APPLY TO THE 3/4" Ø X 6 1/2" BOLT. FIELD TESTING OF THE ADHESIVE BONDING SYSTEM IS NOT REQUIRED.

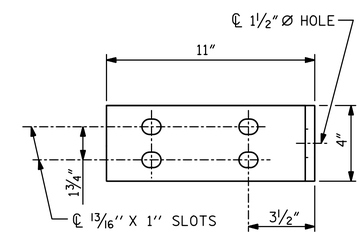

ELEVATION

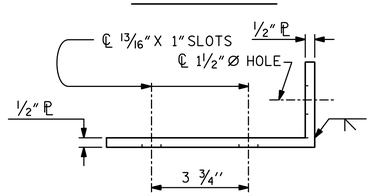

TOP VIEW

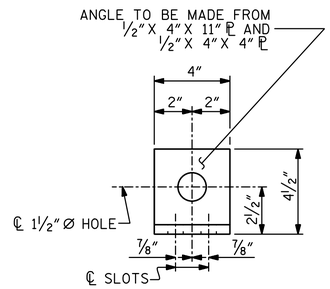

END VIEW

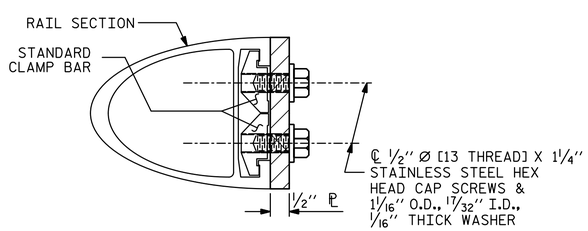

SECTION H-H

DETAILS FOR ATTACHING METAL RAILS TO END POST

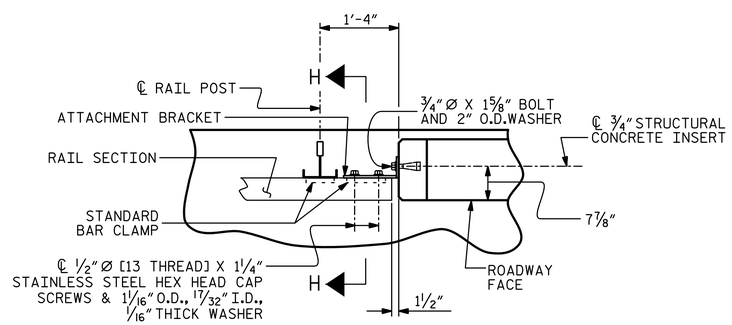

PLAN - RAIL AND END POST

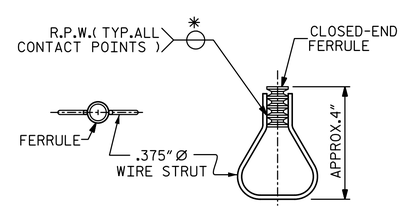

PLAN ELEVATION

STRUCTURAL CONCRETE INSERT

* EACH WELDED ATTACHMENT OF WIRE TO FERRULE SHALL DEVELOP THE TENSILE STRENGTH OF THE WIRE.

PROJECT NO. 17BP.7.R.101

ROCKINGHAM COUNTY

STATION: 15+60.00 -L-

STATE OF NORTH CAROLINA
DEPARTMENT OF TRANSPORTATION
RALEIGH

SUPERSTRUCTURE

RAIL POST SPACING AND END OF RAIL DETAILS

FOR TWO BAR METAL RAILS

PLANS PREPARED BY:
SIMPSON ENGINEERS & ASSOCIATES
5640 Dillard Drive
Suite 200
Cary, NC 27518
(919) 852-0468
(919) 852-0598 (Fax)
www.simpsonengr.com
LICENSURE NO. C-2521

NORTH CAROLINA PROFESSIONAL SEAL ENGINEER BETSY S. COX
5/24/2017

DOCUMENT NOT CONSIDERED FINAL UNLESS ALL SIGNATURES COMPLETED

REVISIONS						SHEET NO.
NO.	BY:	DATE:	NO.	BY:	DATE:	S-14
1			3			TOTAL SHEETS
2			4			26

DRAWN BY:	T. BANKOVICH	DATE:	1-17
CHECKED BY:	B.S. COX	DATE:	1-17
DESIGN ENGINEER OF RECORD:	B.S. COX	DATE:	1-17

DocuSign Envelope ID: 17E46735-EAB2-424D-AFF4-B5B1F69CCA4F

5/24/2017 7:24:21 AM G:\Projects\2015\Division 7 (Hatch Mott)\17BP7R101 (Rockingham 39)(90 33BBU 2BMR)\Structures\Drawings\Final\401_17BP7R101_SMU_SUPER.dgn

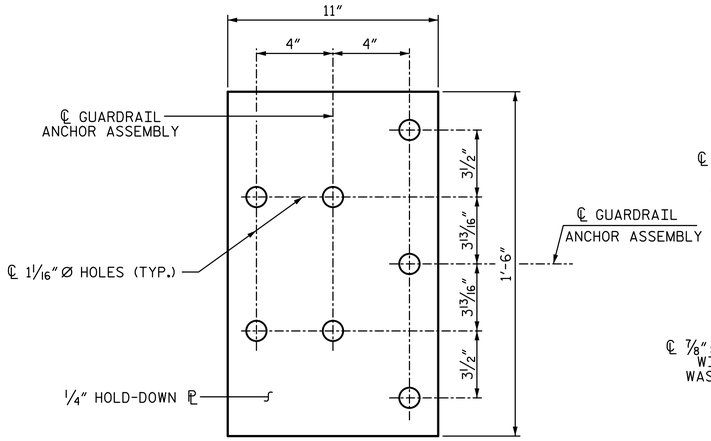

PLAN

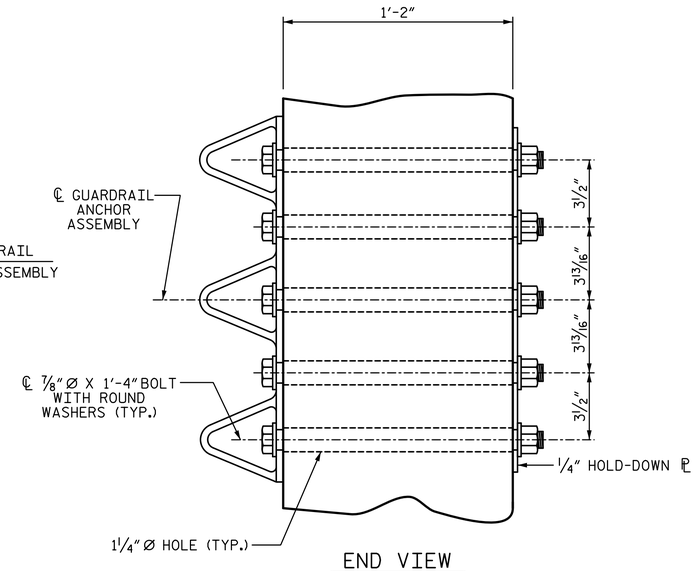

END VIEW

GUARDRAIL ANCHOR ASSEMBLY DETAILS

NOTES:

THE GUARDRAIL ANCHOR ASSEMBLY SHALL CONSIST OF A 1/4" HOLD DOWN PLATE AND 7 - 7/8" Ø BOLTS WITH NUTS AND WASHERS.

THE HOLD-DOWN PLATE SHALL CONFORM TO AASHTO M270 GRADE 36. AFTER FABRICATION, THE HOLD-DOWN PLATE SHALL BE HOT-DIP GALVANIZED IN ACCORDANCE WITH AASHTO M111.

BOLTS SHALL CONFORM TO THE REQUIREMENTS OF ASTM A307 AND NUTS SHALL CONFORM TO THE REQUIREMENTS OF AASHTO M291. BOLTS, NUTS AND WASHERS SHALL BE GALVANIZED. AT THE CONTRACTOR'S OPTION, STAINLESS STEEL BOLTS, NUTS AND WASHERS MAY BE USED AS AN ALTERNATE FOR THE 7/8" Ø GALVANIZED BOLTS, NUTS AND WASHERS. THEY SHALL CONFORM TO OR EXCEED THE MECHANICAL REQUIREMENTS OF ASTM A307. THE USE OF THIS ALTERNATE SHALL BE APPROVED BY THE ENGINEER.

THE GUARDRAIL ANCHOR ASSEMBLY IS REQUIRED AT ALL POINTS WHERE APPROACH GUARDRAIL IS TO BE ATTACHED TO THE END OF THE PARAPET. FOR POINTS OF ATTACHMENT, SEE SKETCH.

AFTER INSTALLATION, THE EXPOSED THREAD OF THE BOLT SHALL BE BURRED WITH A SHARP POINTED TOOL.

THE COST OF THE GUARDRAIL ANCHOR ASSEMBLIES WITH BOLTS, NUTS AND WASHERS COMPLETE IN PLACE, SHALL BE INCLUDED IN THE VARIOUS PAY ITEMS.

THE VERTICAL REINFORCING BARS MAY BE SHIFTED SLIGHTLY IN THE END POST TO CLEAR ASSEMBLY BOLTS.

THE 1 1/4" Ø HOLES SHALL BE FORMED OR DRILLED WITH A CORE BIT. IMPACT TOOLS WILL NOT BE PERMITTED. ANY CONCRETE DAMAGED BY THIS WORK SHALL BE REPAIRED TO THE SATISFACTION OF THE ENGINEER.

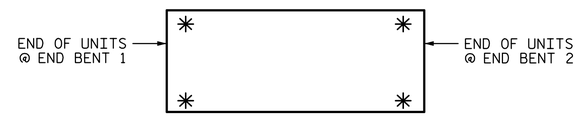

SKETCH SHOWING POINTS OF ATTACHMENT

✳ LOCATION OF GUARDRAIL ATTACHMENT

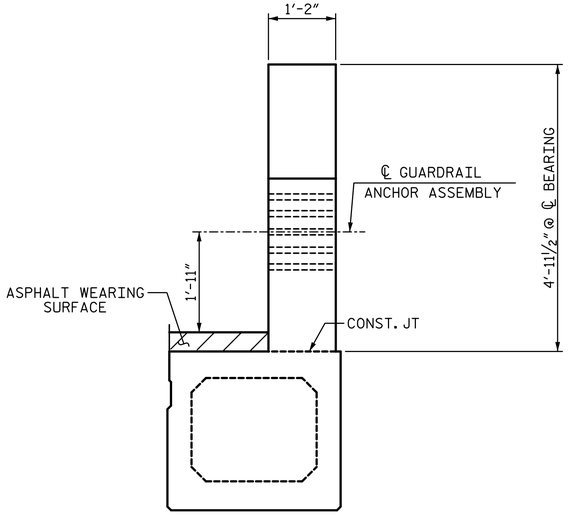

END VIEW

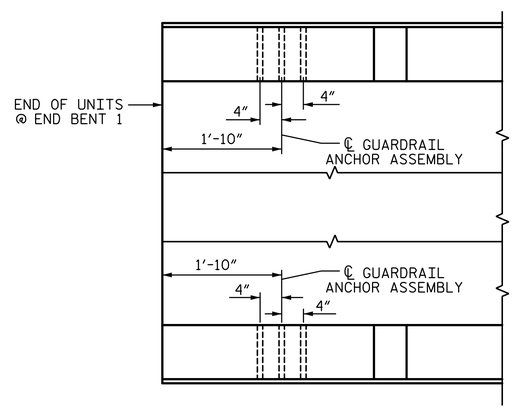

PLAN

(END BENT 1 SHOWN, END BENT 2 SIMILAR)

LOCATION OF GUARDRAIL ANCHOR AT END POST

PROJECT NO. 17BP.7.R.101

ROCKINGHAM COUNTY

STATION: 15+60.00 -L-

STATE OF NORTH CAROLINA
DEPARTMENT OF TRANSPORTATION
RALEIGH

SUPERSTRUCTURE

GUARDRAIL ANCHORAGE DETAILS FOR METAL RAILS

PLANS PREPARED BY:

SIMPSON ENGINEERS & ASSOCIATES
5640 Dillard Drive
Suite 200
Cary, NC 27518
(919) 852-0468
(919) 852-0598 (Fax)
www.simpsonengr.com
LICENSURE NO. C-2521

NORTH CAROLINA PROFESSIONAL SEAL 21268 ENGINEER BETSY S. COX
Digitally signed by Betsy S. Cox
5/24/2017

DOCUMENT NOT CONSIDERED FINAL UNLESS ALL SIGNATURES COMPLETED

REVISIONS						SHEET NO.
NO.	BY:	DATE:	NO.	BY:	DATE:	S-15
1			3			TOTAL SHEETS
2			4			26

DRAWN BY:	T. BANKOVICH	DATE:	1-17
CHECKED BY:	B.S. COX	DATE:	1-17
DESIGN ENGINEER OF RECORD:	B.S. COX	DATE:	1-17

DocuSign Envelope ID: 17E46735-EAB2-424D-AFF4-B5B1F69CCA4F

5/24/2017 7:24:21 AM G:\Projects\2015\Division 7 (Hatch Mott)\17BP7R101 (Rockingham 39)(90 33BBU 2BMR)\Structures\Drawings\Final\401_17BP7R101_SMU_EB.dgn

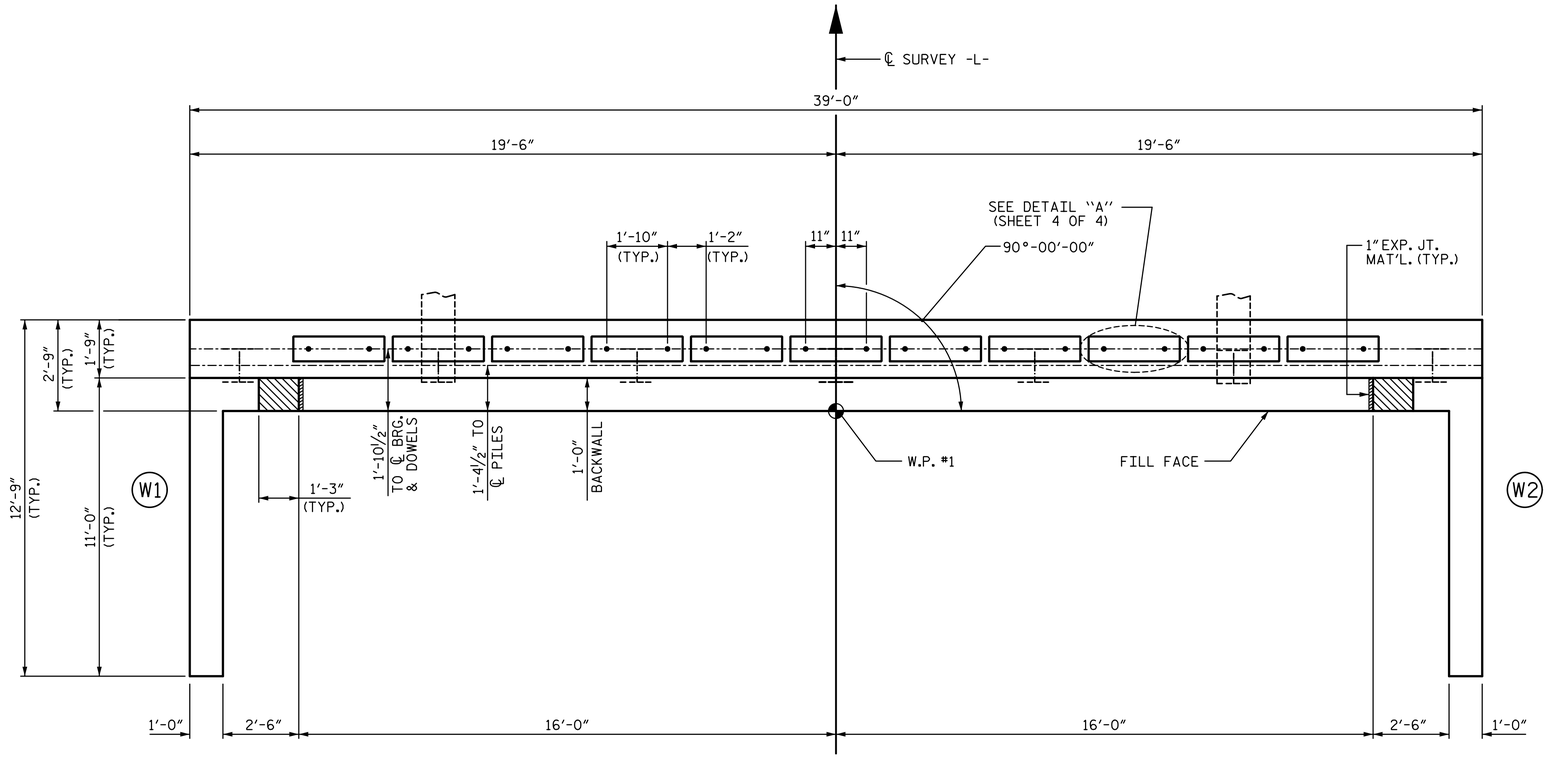

PLAN

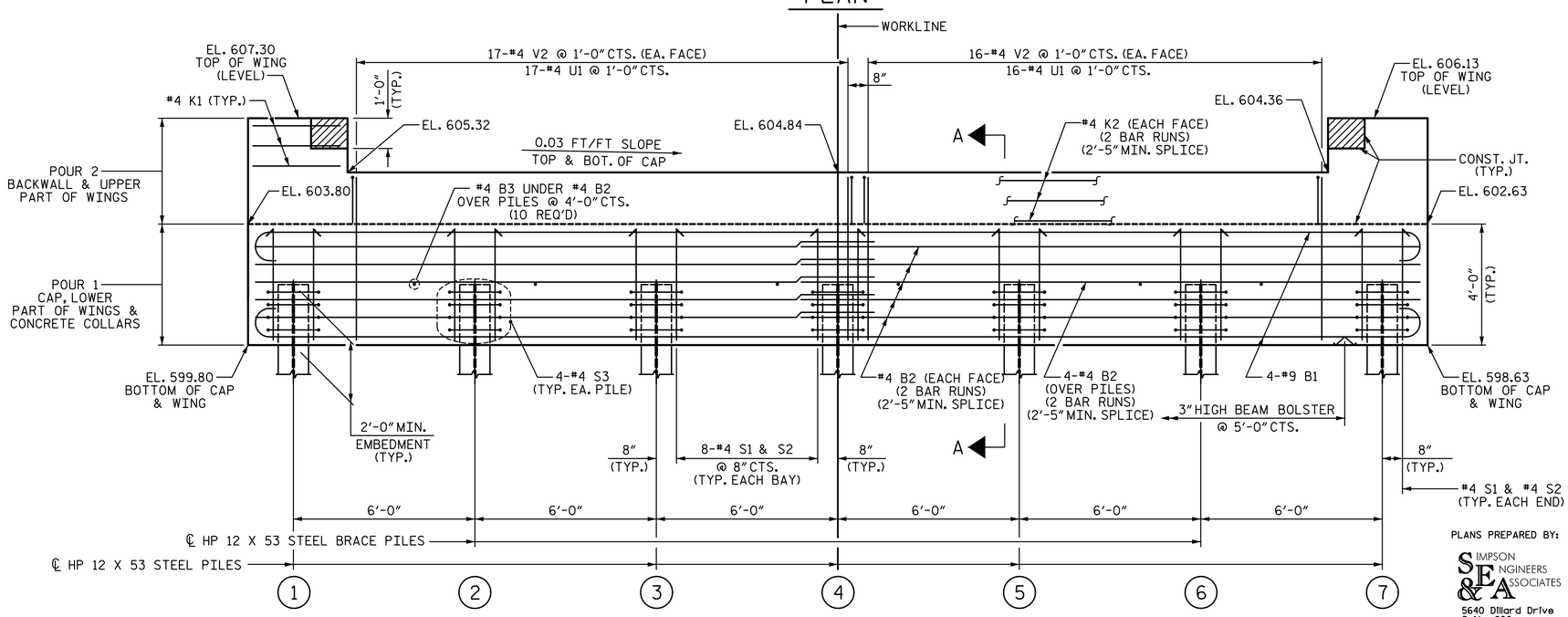

ELEVATION

WINGS NOT SHOWN FOR CLARITY.
FOR SECTION A-A, SEE SHEET 4 OF 4.
CONCRETE COLLARS FOR STEEL PILES NOT SHOWN IN PLAN AND ELEVATION VIEWS FOR CLARITY.
SEE "CORROSION PROTECTION FOR STEEL PILES DETAIL", SHEET 4 OF 4.

NOTES:

STIRRUPS IN CAP MAY BE SHIFTED AS NECESSARY TO CLEAR DOWELS.

THE CONCRETE IN THE SHADED AREA OF THE WING SHALL BE POURED AFTER THE CONCRETE PARAPET IS CAST IF SLIP FORMING IS USED.

FOR PILE SPLICE DETAILS, SEE SHEET 4 OF 4.

FOR WING DETAILS, SEE SHEET 3 OF 4.

TOP OF PILE ELEVATIONS	
1	601.77
2	601.59
3	601.41
4	601.23
5	601.05
6	600.87
7	600.69

PROJECT NO. 17BP.7.R.101
ROCKINGHAM COUNTY
STATION: 15+60.00 -L-

SHEET 1 OF 4

STATE OF NORTH CAROLINA
DEPARTMENT OF TRANSPORTATION
RALEIGH

SUBSTRUCTURE

END BENT 1

PLANS PREPARED BY:
SIMPSON ENGINEERS & ASSOCIATES
5640 Dillard Drive
Suite 200
Cary, NC 27518
(919) 852-0468
(919) 852-0598 (Fax)
www.simpsonengr.com
LICENSURE NO. C-2521

NORTH CAROLINA PROFESSIONAL SEAL 041268 ENGINEER BETSY S. COX
5/24/2017

DOCUMENT NOT CONSIDERED FINAL UNLESS ALL SIGNATURES COMPLETED

DRAWN BY:	T. BANKOVICH	DATE:	1-17
CHECKED BY:	B.S. COX	DATE:	1-17
DESIGN ENGINEER OF RECORD:	B.S. COX	DATE:	1-17

REVISIONS						SHEET NO.
NO.	BY:	DATE:	NO.	BY:	DATE:	S-16
1			3			TOTAL SHEETS
2			4			26

DocuSign Envelope ID: 17E46735-EAB2-424D-AFF4-B5B1F69CCA4F

5/24/2017 7:24:21 AM G:\Projects\2015\Division 7 (Hatch Mott)\17BP7R101 (Rockingham 39)(90 33BBU 2BMR)\Structures\Drawings\Final\401_17BP7R101_SMU_EB.dgn

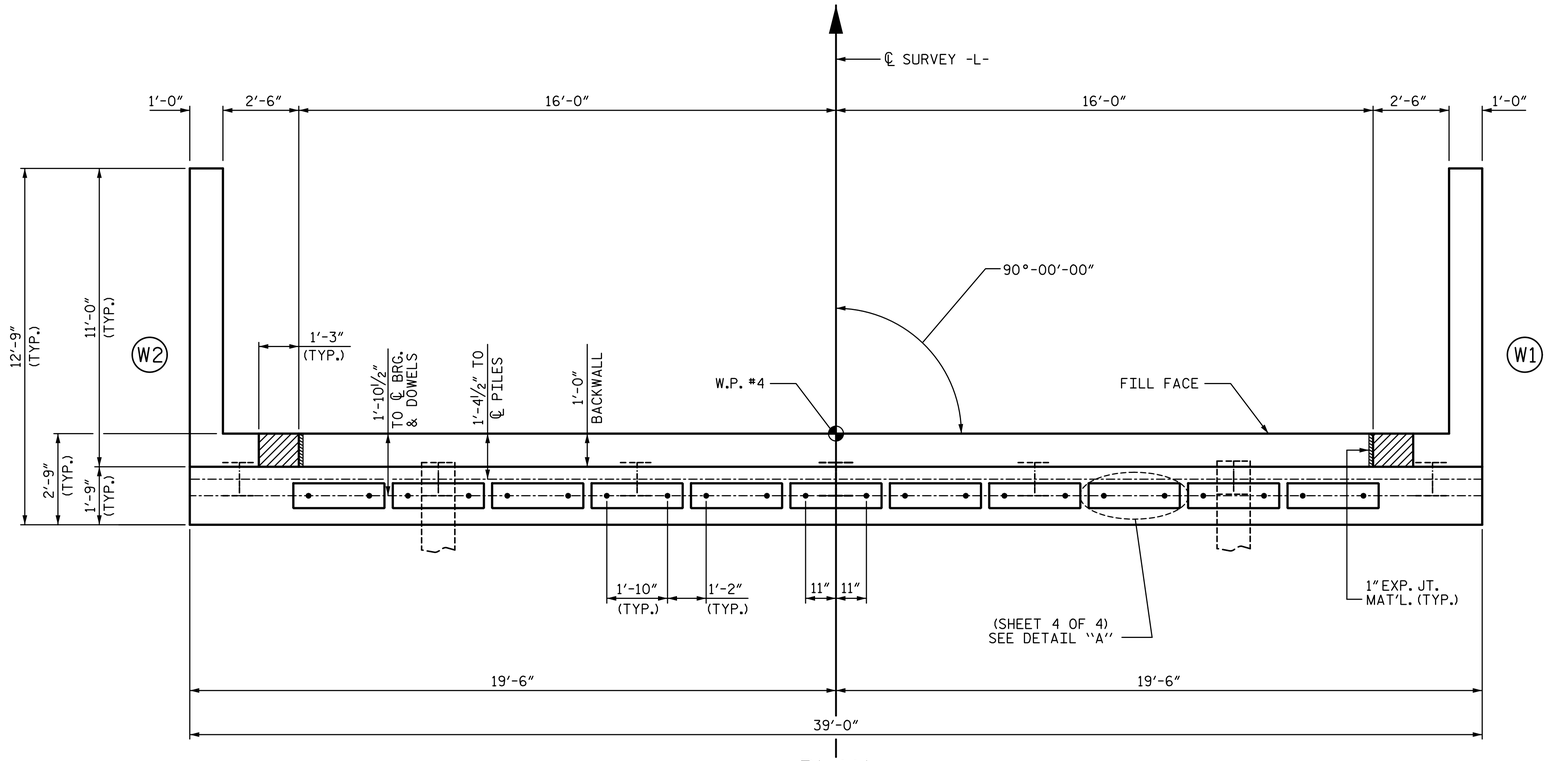

PLAN

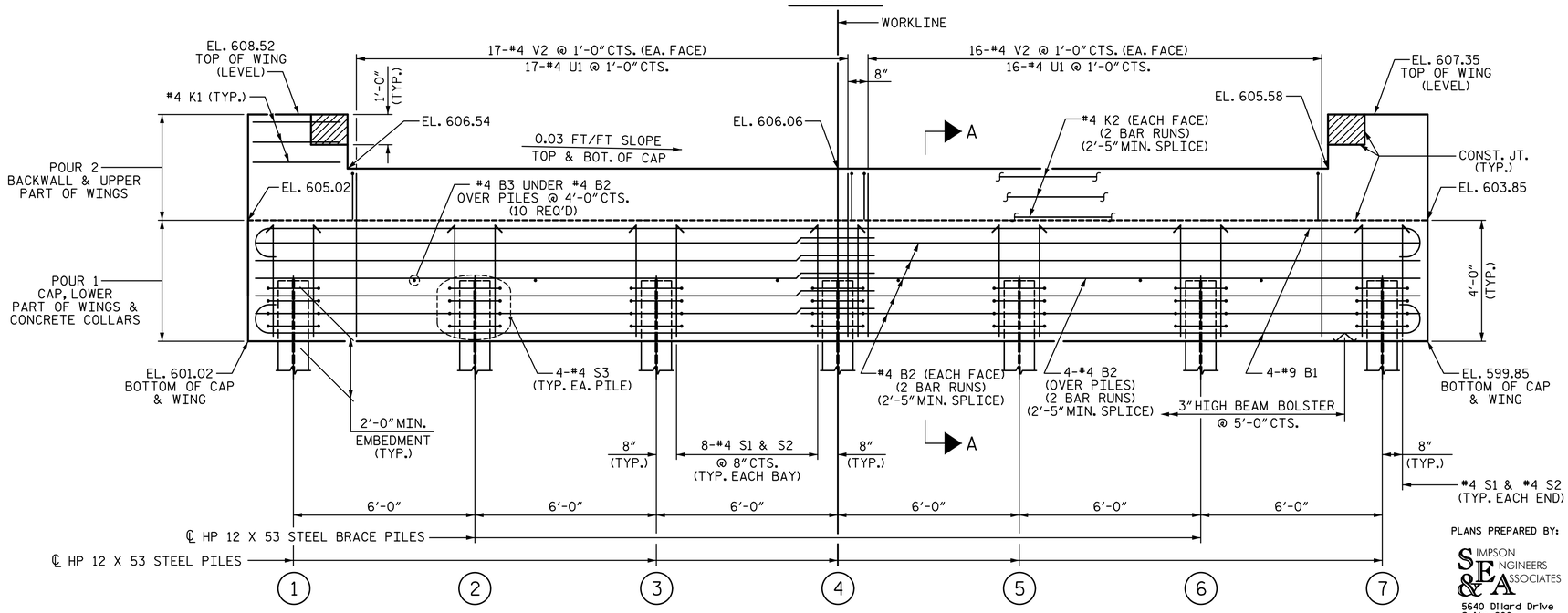

ELEVATION

WINGS NOT SHOWN FOR CLARITY.
FOR SECTION A-A, SEE SHEET 4 OF 4.
CONCRETE COLLARS FOR STEEL PILES NOT SHOWN IN PLAN AND ELEVATION VIEWS FOR CLARITY.
SEE "CORROSION PROTECTION FOR STEEL PILES DETAIL", SHEET 4 OF 4.

NOTES:

STIRRUPS IN CAP MAY BE SHIFTED AS NECESSARY TO CLEAR DOWELS.

THE CONCRETE IN THE SHADED AREA OF THE WING SHALL BE POURED AFTER THE CONCRETE PARAPET IS CAST IF SLIP FORMING IS USED.

FOR PILE SPLICE DETAILS, SEE SHEET 4 OF 4.

FOR WING DETAILS, SEE SHEET 3 OF 4.

TOP OF PILE ELEVATIONS	
1	602.99
2	602.81
3	602.63
4	602.45
5	602.27
6	602.09
7	601.91

PROJECT NO. 17BP.7.R.101
ROCKINGHAM COUNTY
STATION: 15+60.00 -L-

SHEET 2 OF 4

STATE OF NORTH CAROLINA
DEPARTMENT OF TRANSPORTATION
RALEIGH

SUBSTRUCTURE

END BENT 2

PLANS PREPARED BY:
SIMPSON ENGINEERS & ASSOCIATES
5640 Dillard Drive
Suite 200
Cary, NC 27518
(919) 852-0468
(919) 852-0598 (Fax)
www.simpsonengr.com
LICENSURE NO. C-2521

NORTH CAROLINA PROFESSIONAL SEAL 041268 ENGINEER BETSY S. COX
5/24/2017

DOCUMENT NOT CONSIDERED FINAL UNLESS ALL SIGNATURES COMPLETED

DRAWN BY:	T. BANKOVICH	DATE:	1-17
CHECKED BY:	B.S. COX	DATE:	1-17
DESIGN ENGINEER OF RECORD:	B.S. COX	DATE:	1-17

REVISIONS						SHEET NO.
NO.	BY:	DATE:	NO.	BY:	DATE:	S-17
1			3			TOTAL SHEETS
2			4			26

DocuSign Envelope ID: 17E46735-EAB2-424D-AFF4-B5B1F69CCA4F

5/24/2017 7:24:22 AM G:\Projects\2015\Division 7 (Hatch Mott)\17BP7R101 (Rockingham 39)(90 33BBU 2BMR)\Structures\Drawings\Final\401_17BP7R101_SMU_EB.dgn

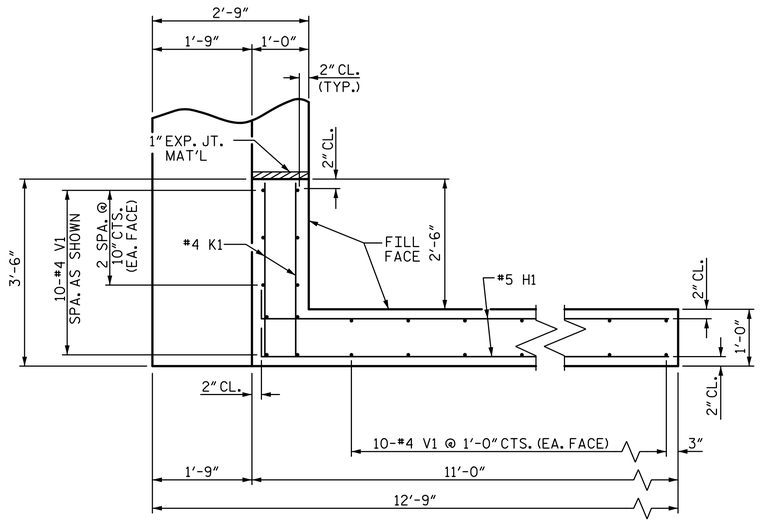

PLAN OF WING (W1)

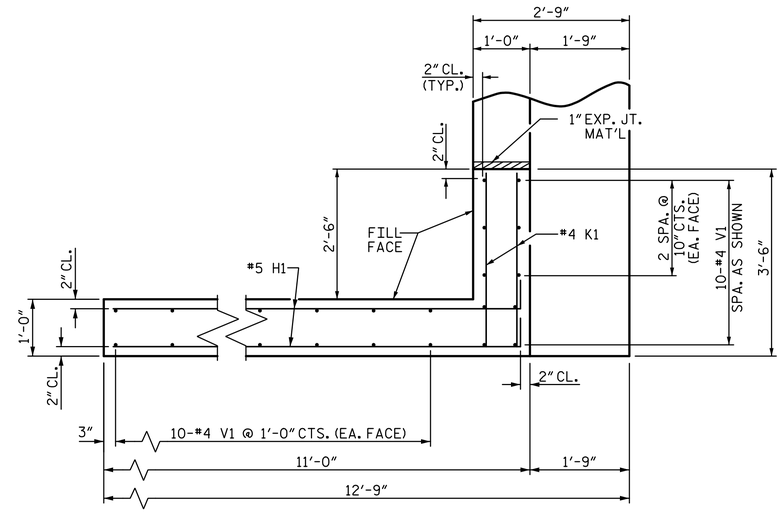

PLAN OF WING (W2)

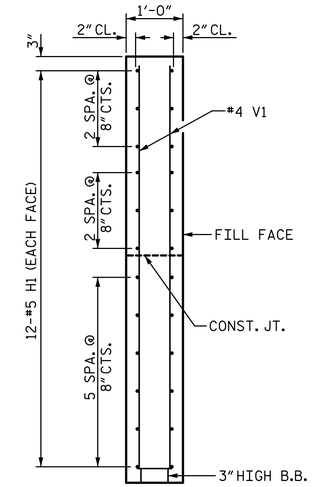

SECTION X-X

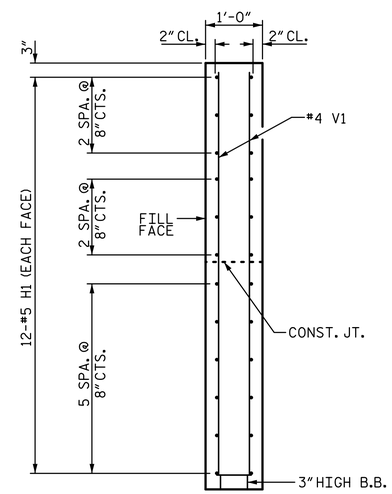

SECTION Y-Y

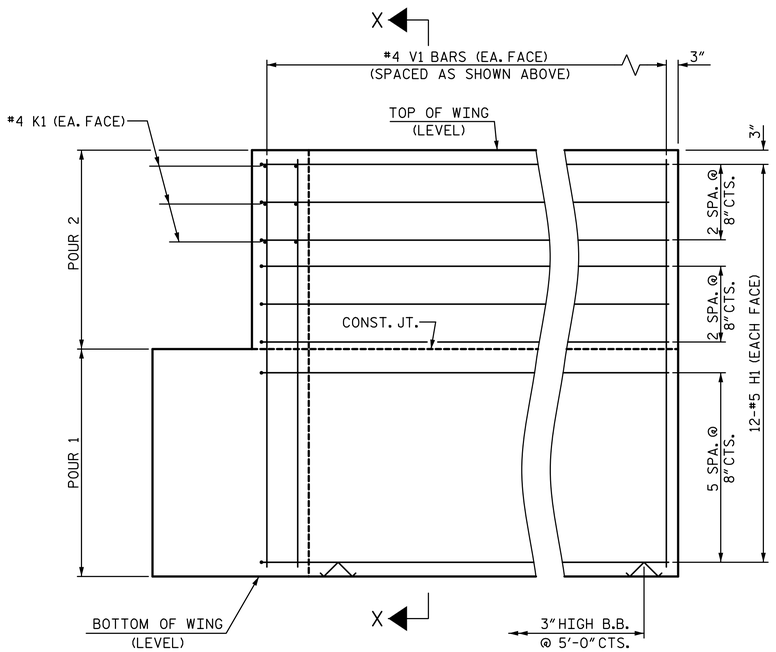

ELEVATION OF WING (W1)

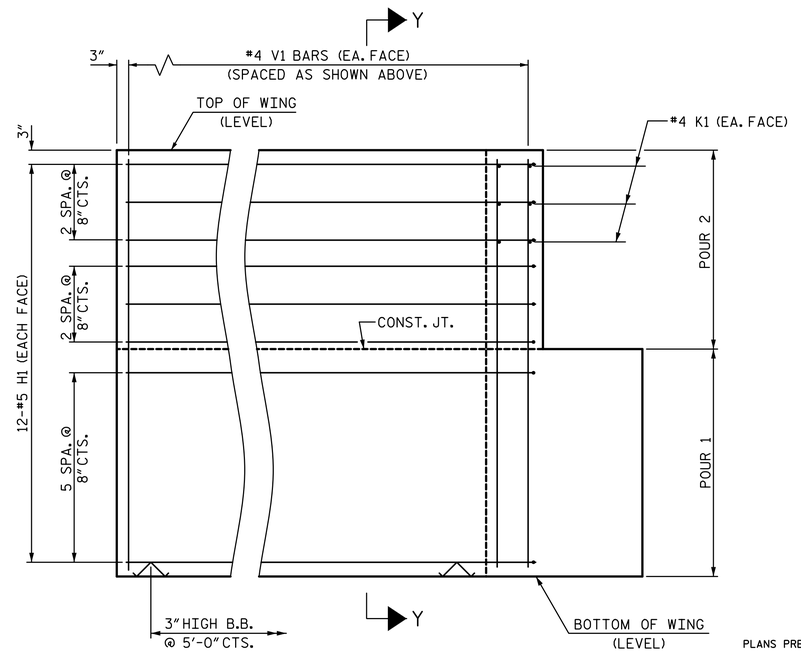

ELEVATION OF WING (W2)

WING DETAILS

PROJECT NO. 17BP.7.R.101
ROCKINGHAM COUNTY
STATION: 15+60.00 -L-

SHEET 3 OF 4

STATE OF NORTH CAROLINA
DEPARTMENT OF TRANSPORTATION
RALEIGH
SUBSTRUCTURE

END BENT
WING DETAILS

PLANS PREPARED BY:
SIMPSON ENGINEERS & ASSOCIATES
5640 Dillard Drive
Suite 200
Cary, NC 27518
(919) 852-0468
(919) 852-0598 (Fax)
www.simpsonengr.com
LICENSURE NO. C-2521

NORTH CAROLINA PROFESSIONAL SEAL ENGINEER BETSY S. COX
DocuSigned by: Betsy Cox 268
5/24/2017

DOCUMENT NOT CONSIDERED FINAL UNLESS ALL SIGNATURES COMPLETED

DRAWN BY:	T. BANKOVICH	DATE:	1-17
CHECKED BY:	B.S. COX	DATE:	1-17
DESIGN ENGINEER OF RECORD:	B.S. COX	DATE:	1-17

REVISIONS

NO.	BY:	DATE:	NO.	BY:	DATE:
1			3		
2			4		

SHEET NO. S-18
TOTAL SHEETS 26

DocuSign Envelope ID: 17E46735-EAB2-424D-AFF4-B5B1F69CCA4F

5/24/2017 7:24:22 AM G:\Projects\2015\Division 7 (Hatch Mott)\17BP7R101 (Rockingham 39)(90 33BBU 2BMR)\Structures\Drawings\Final\401_17BP7R101_SMU_EB.dgn

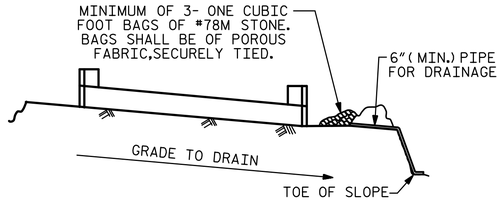

BAGGED STONE AND PIPE SHALL BE PLACED IMMEDIATELY AFTER COMPLETION OF END BENT EXCAVATION. PIPE MAY BE EITHER CONCRETE, CORRUGATED STEEL, CORRUGATED ALUMINUM ALLOY, OR CORRUGATED PLASTIC. PERFORATED PIPE WILL NOT BE ALLOWED.

BAGGED STONE SHALL REMAIN IN PLACE UNTIL THE ENGINEER DIRECTS THAT IT BE REMOVED. THE CONTRACTOR SHALL REMOVE AND DISPOSE OF SILT ACCUMULATIONS AT BAGGED STONE WHEN SO DIRECTED BY THE ENGINEER. BAGS SHALL BE REMOVED AND REPLACED WHENEVER THE ENGINEER DETERMINES THAT THEY HAVE DETERIORATED AND LOST THEIR EFFECTIVENESS.

NO SEPARATE PAYMENT WILL BE MADE FOR THIS WORK AND THE ENTIRE COST OF THIS WORK SHALL BE INCLUDED IN THE UNIT CONTRACT PRICE BID FOR THE SEVERAL PAY ITEMS.

TEMPORARY DRAINAGE AT END BENT

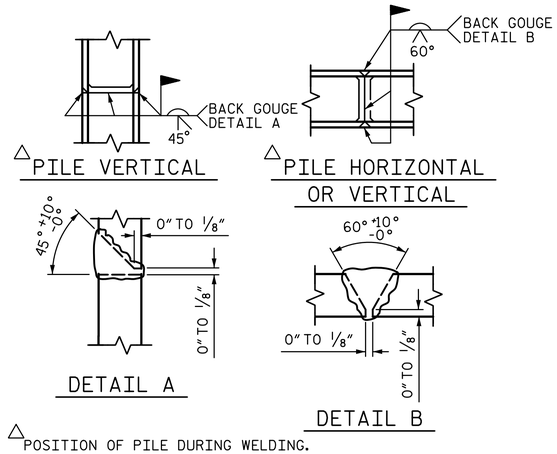

△POSITION OF PILE DURING WELDING.

PILE SPLICE DETAILS

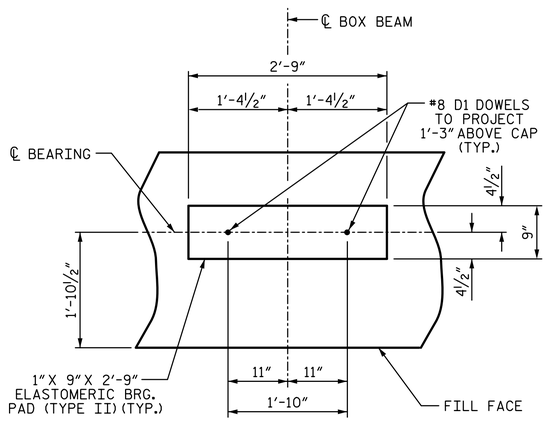

DETAIL "A"

(END BENT 1 SHOWN, END BENT 2 SIMILAR BY ROTATION)

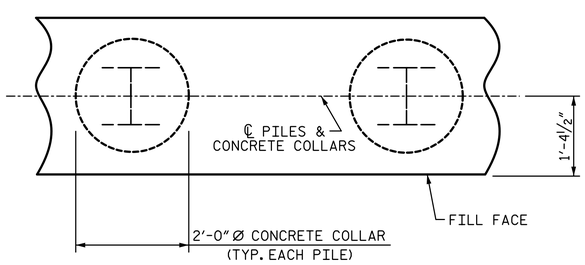

PLAN

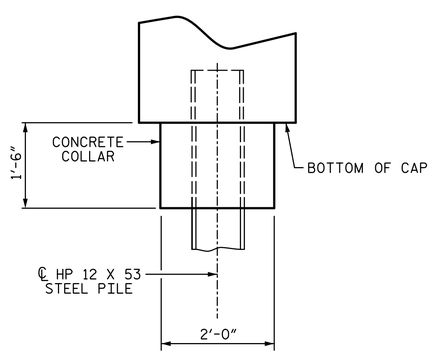

ELEVATION

CORROSION PROTECTION FOR STEEL PILES DETAIL

(END BENT 1 SHOWN, END BENT 2 SIMILAR BY ROTATION)

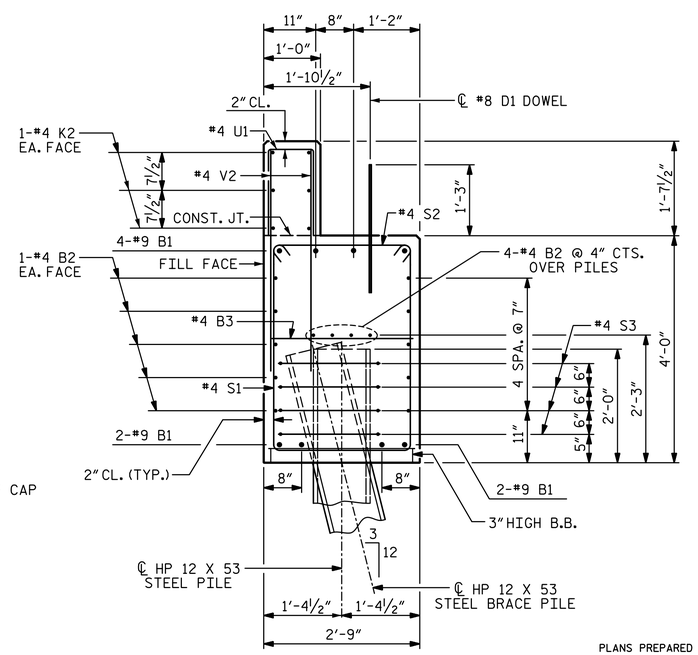

SECTION A-A

(CONCRETE COLLAR NOT SHOWN FOR CLARITY. SEE "CORROSION PROTECTION FOR STEEL PILES DETAIL.")

BAR TYPES

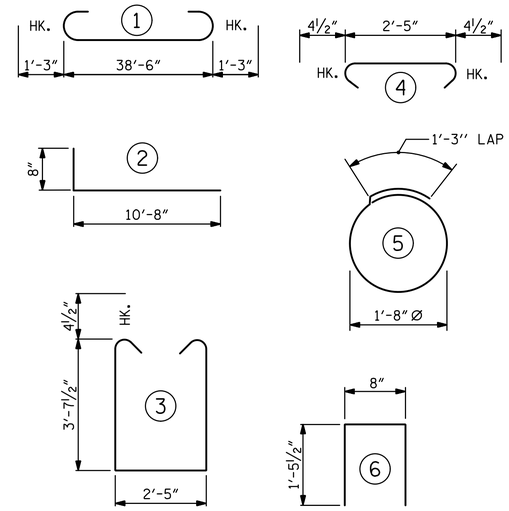

ALL BAR DIMENSIONS ARE OUT TO OUT.

BILL OF MATERIAL FOR ONE END BENT

BAR	NO.	SIZE	TYPE	LENGTH	WEIGHT
B1	8	#9	1	41'-0"	1115
B2	28	#4	STR	20'-7"	385
B3	10	#4	STR	2'-5"	16
D1	22	#8	STR	2'-3"	132
H1	48	#5	2	11'-4"	567
K1	12	#4	STR	3'-1"	25
K2	12	#4	STR	20'-7"	165
S1	50	#4	3	10'-5"	348
S2	50	#4	4	3'-2"	106
S3	28	#4	5	6'-6"	122
U1	33	#4	6	3'-7"	79
V1	60	#4	STR	7'-2"	287
V2	66	#4	STR	5'-3"	231

REINFORCING STEEL (FOR ONE END BENT) 3578 LBS.

CLASS A CONCRETE BREAKDOWN (FOR ONE END BENT)

POUR 1 CAP, LOWER PART OF WINGS & COLLARS 20.1 C.Y.

POUR 2 BACKWALL & UPPER PART OF WINGS 5.4 C.Y.

TOTAL CLASS A CONCRETE 25.6 C.Y.

END BENT 1
HP 12 X 53 STEEL PILES
NO: 7 LIN. FT.= 140
STEEL PILE POINTS NO: 7
PILE DRIVING EQUIPMENT SETUP FOR HP 12 X 53 STEEL PILES EA: 7

END BENT 2
HP 12 X 53 STEEL PILES
NO: 7 LIN. FT.= 125
STEEL PILE POINTS NO: 7
PILE DRIVING EQUIPMENT SETUP FOR HP 12 X 53 STEEL PILES EA: 7

PROJECT NO. 17BP.7.R.101
ROCKINGHAM COUNTY
STATION: 15+60.00 -L-

SHEET 4 OF 4

STATE OF NORTH CAROLINA
DEPARTMENT OF TRANSPORTATION
RALEIGH

SUBSTRUCTURE

END BENT 1 & 2 DETAILS

PLANS PREPARED BY:

SIMPSON ENGINEERS & ASSOCIATES
5640 Dillard Drive
Suite 200
Cary, NC 27518
(919) 852-0468
(919) 852-0598 (Fax)
www.simpsonengr.com
LICENSURE NO. C-2521

NORTH CAROLINA PROFESSIONAL SEAL ENGINEER BETSY S. COX
5/24/2017

DRAWN BY: T. BANKOVICH DATE: 1-17
CHECKED BY: B.S. COX DATE: 1-17
DESIGN ENGINEER OF RECORD: B.S. COX DATE: 1-17

DOCUMENT NOT CONSIDERED FINAL UNLESS ALL SIGNATURES COMPLETED

REVISIONS						SHEET NO.
NO.	BY:	DATE:	NO.	BY:	DATE:	S-19
1			3			TOTAL SHEETS
2			4			26

DocuSign Envelope ID: 17E46735-EAB2-424D-AFF4-B5B1F69CCA4F

5/24/2017 7:24:22 AM G:\Projects\2015\Division 7 (Hatch Mott)\17BP7R101 (Rockingham 39)(90 33BBU 2BMR)\Structures\Drawings\Final\401_17BP7R101_SMU_BT1.dgn

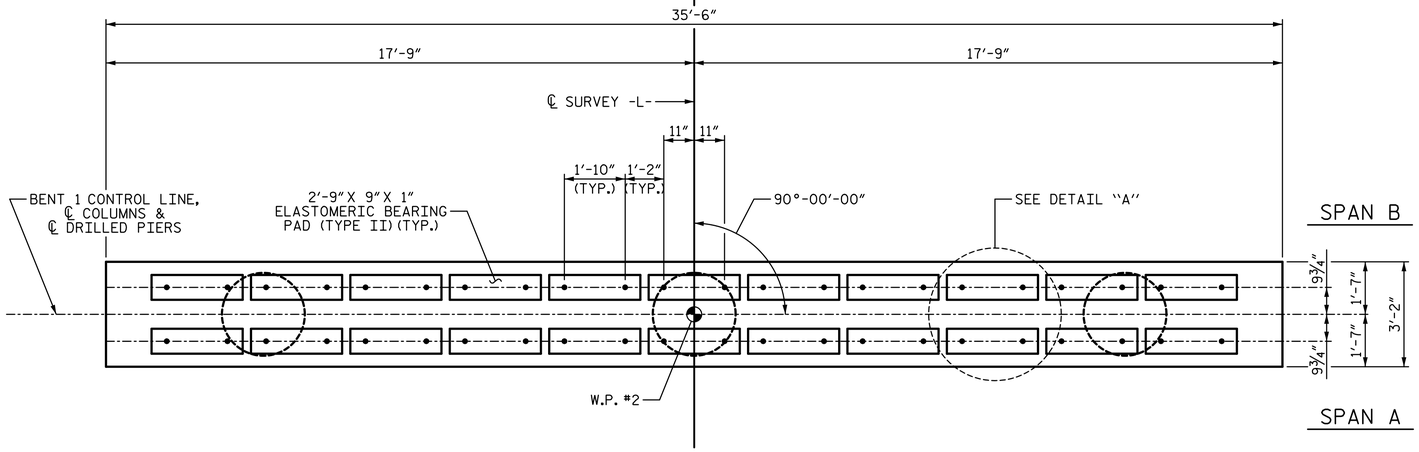

PLAN

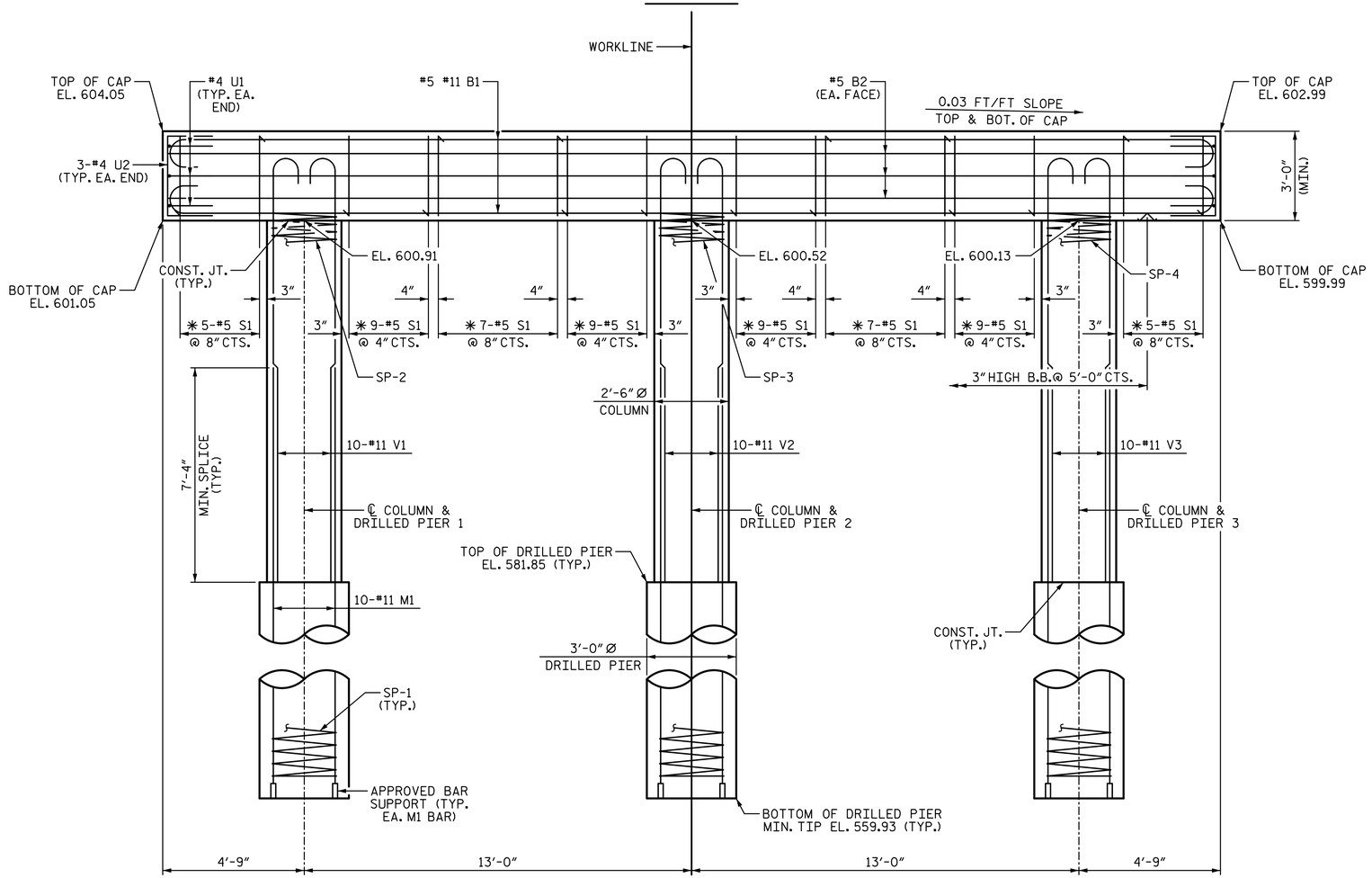

ELEVATION

DIMENSIONS & REINFORCING STEEL ARE TYPICAL FOR EACH COLUMN & DRILLED PIER UNLESS OTHERWISE NOTED.

NOTES:

STIRRUPS IN CAP MAY BE SHIFTED AS NECESSARY TO CLEAR DOWELS.

HOOKS ON "V" BARS MAY BE TURNED AS NECESSARY FOR PLACING REINFORCING STEEL.

FOR DRILLED PIERS, SEE SECTION 411 OF THE STANDARD SPECIFICATIONS.

ALL STEEL IN THE DRILLED PIERS IS INCLUDED IN THE PAY ITEMS FOR "REINFORCING STEEL" AND "SPIRAL COLUMN REINFORCING STEEL."

✳ INVERT ALTERNATE STIRRUPS.

THE LOCATION OF THE CONSTRUCTION JOINT IN THE DRILLED PIERS IS BASED ON AN APPROXIMATE GROUND LINE ELEVATION. IF THE CONSTRUCTION JOINT IS ABOVE THE ACTUAL GROUND LINE ELEVATION, THE CONTRACTOR SHALL PLACE THE CONSTRUCTION JOINT ONE FOOT BELOW THE GROUND LINE.

THE CONTRACTOR'S ATTENTION IS CALLED TO THE FACT THAT THE LONGITUDINAL REINFORCEMENT FOR DRILLED PIERS IS DETAILED WITH 3 FEET OF EXTRA LENGTH.

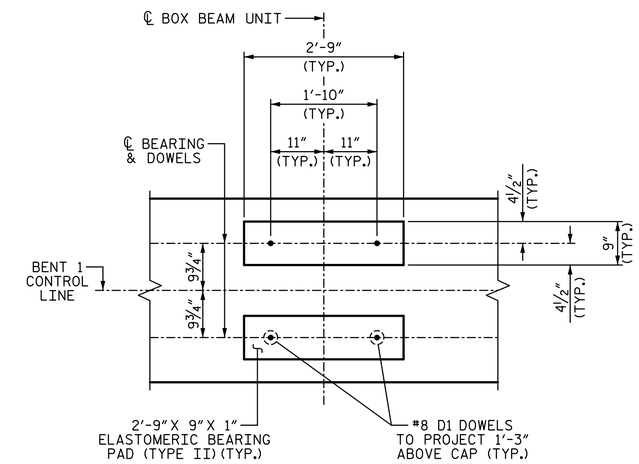

DETAIL "A"

DIMENSIONS ARE TYPICAL EACH BEARING

PROJECT NO. 17BP.7.R.101

ROCKINGHAM COUNTY

STATION: 15+60.00 -L-

SHEET 1 OF 2

STATE OF NORTH CAROLINA
DEPARTMENT OF TRANSPORTATION
RALEIGH

SUBSTRUCTURE

BENT 1

PLANS PREPARED BY:

SIMPSON ENGINEERS & ASSOCIATES
5640 Dillard Drive
Suite 200
Cary, NC 27518
(919) 852-0468
(919) 852-0598 (Fax)
www.simpsonengr.com
LICENSURE NO. C-2521

NORTH CAROLINA PROFESSIONAL SEAL 041268 ENGINEER BETSY S. COX
5/24/2017

DOCUMENT NOT CONSIDERED FINAL UNLESS ALL SIGNATURES COMPLETED

DRAWN BY:	T. BANKOVICH	DATE:	1-17
CHECKED BY:	B.S. COX	DATE:	1-17
DESIGN ENGINEER OF RECORD:	B.S. COX	DATE:	1-17

REVISIONS						SHEET NO.
NO.	BY:	DATE:	NO.	BY:	DATE:	S-20
1			3			TOTAL SHEETS
2			4			26

DocuSign Envelope ID: 17E46735-EAB2-424D-AFF4-B5B1F69CCA4F

5/24/2017 7:24:22 AM G:\Projects\2015\Division 7 (Hatch Mott)\17BP7R101 (Rockingham 39) (90 33BBU 2BMR)\Structures\Drawings\Final\401_17BP7R101_SMU_BT1.dgn

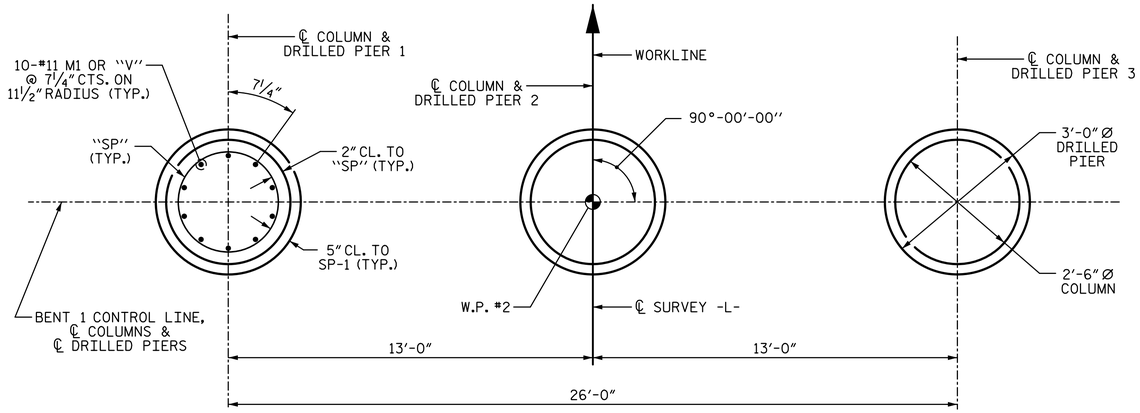

PLAN OF DRILLED PIERS & COLUMNS

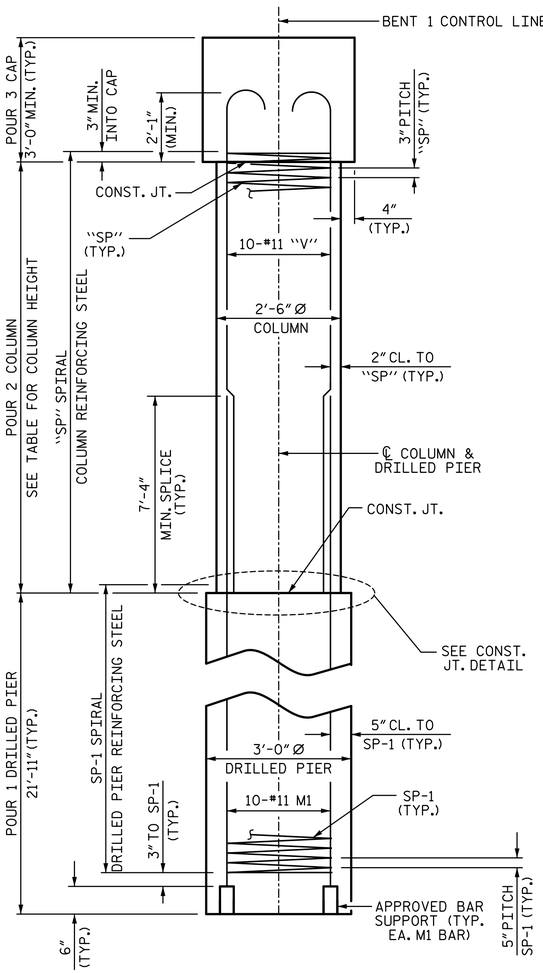

END ELEVATION

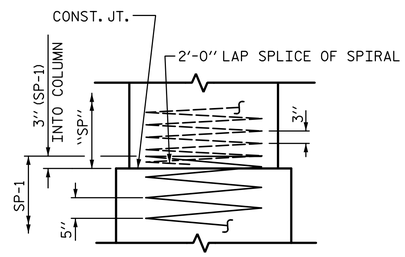

CONSTRUCTION JOINT DETAIL

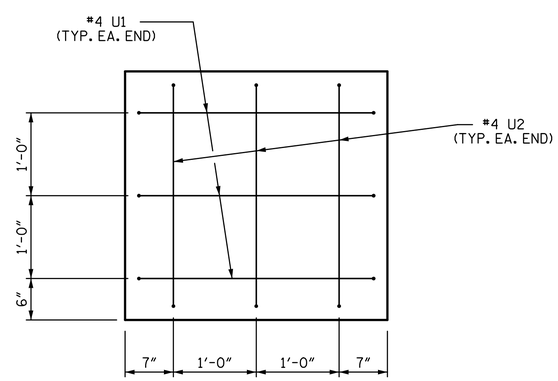

END OF CAP VIEW

(TYPICAL BOTH ENDS)

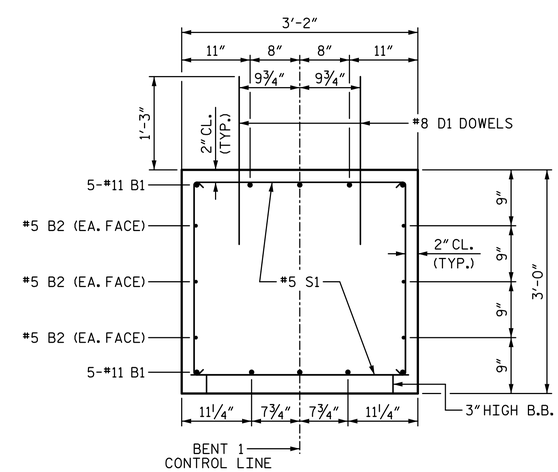

SECTION THRU CAP

BAR TYPES

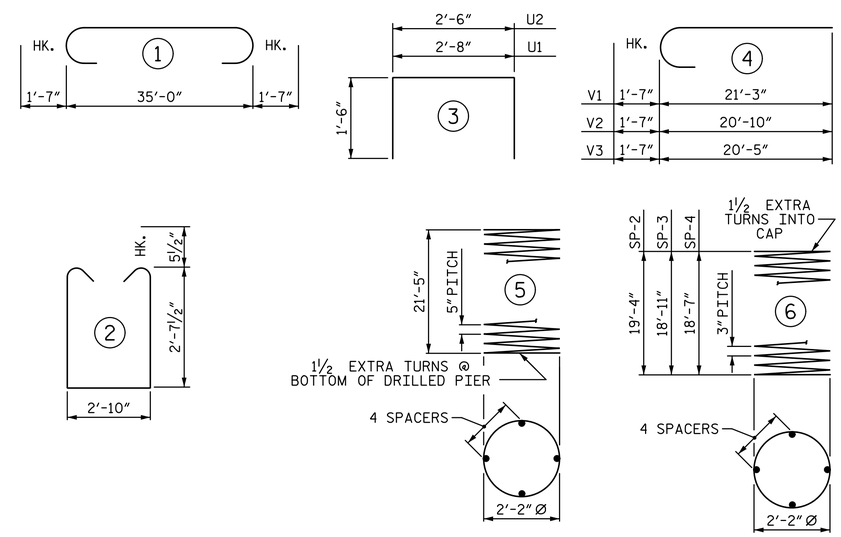

ALL BAR DIMENSIONS ARE OUT TO OUT

BILL OF MATERIAL

BENT 1

BAR	NO.	SIZE	TYPE	LENGTH	WEIGHT
B1	10	#11	1	38'-2"	2028
B2	6	#5	STR	35'-2"	220
D1	44	#8	STR	2'-3"	264
M1	30	#11	STR	31'-9"	5061
S1	60	#5	2	9'-0"	563
U1	6	#4	3	5'-8"	23
U2	6	#4	3	5'-6"	22
V1	10	#11	4	22'-10"	1213
V2	10	#11	4	22'-5"	1191
V3	10	#11	4	22'-0"	1169
REINFORCING STEEL					11754 LB
SP-1	3	✳	5	352'-10"	1104
SP-2	1	✳✳	6	527'-10"	353
SP-3	1	✳✳	6	521'-1"	348
SP-4	1	✳✳	6	507'-9"	339
SPIRAL COLUMN REINF.					2144 LB

✳ THE SP-1 SPIRAL REINFORCING STEEL SHALL BE W31 OR D-31 COLD DRAWN WIRE OR #5 PLAIN OR DEFORMED BAR

✳✳ THE SP-2, SP-3 & SP-4 SPIRAL REINF. STEEL SHALL BE W20 OR D-20 COLD DRAWN WIRE OR #4 PLAIN OR DEFORMED BAR

CLASS A CONCRETE BREAKDOWN	
POUR 2 (COLUMNS)	10.2 C.Y.
POUR 3 (CAP)	12.5 C.Y.
TOTAL CLASS A CONCRETE	22.7 CY

DRILLED PIERS:

DRILLED PIER CONCRETE	
POUR 1 (DRILLED PIERS)	17.2 C.Y.
3'-0" Ø DRILLED PIER NOT IN SOIL	26.00 LF
3'-0" Ø DRILLED PIER IN SOIL	39.75 LF
PERMANENT STEEL CASING FOR 3'-0" Ø DRILLED PIER	35.60 LF
CSL TUBES	281.00 LF

COLUMN HEIGHT

COLUMN #1	COLUMN #2	COLUMN #3
19'-0¾"	18'-8 1/16"	18'-3⅜"

PROJECT NO. 17BP.7.R.101

ROCKINGHAM COUNTY

STATION: 15+60.00 -L-

SHEET 2 OF 2

STATE OF NORTH CAROLINA
DEPARTMENT OF TRANSPORTATION
RALEIGH

SUBSTRUCTURE

BENT 1

PLANS PREPARED BY:

SIMPSON ENGINEERS & ASSOCIATES
5640 Dillard Drive
Suite 200
Cary, NC 27518
(919) 852-0468
(919) 852-0598 (Fax)
www.slmpsonengr.com
LICENSURE NO. C-2521

NORTH CAROLINA PROFESSIONAL SEAL 042268 ENGINEER BETSY S. COX
5/24/2017

DOCUMENT NOT CONSIDERED FINAL UNLESS ALL SIGNATURES COMPLETED

DRAWN BY: T. BANKOVICH	DATE: 1-17	
CHECKED BY: B.S. COX	DATE: 1-17	
DESIGN ENGINEER OF RECORD: B.S. COX	DATE: 1-17	

REVISIONS						SHEET NO.
NO.	BY:	DATE:	NO.	BY:	DATE:	S-21
1			3			TOTAL SHEETS
2			4			26

DocuSign Envelope ID: 17E46735-EAB2-424D-AFF4-B5B1F69CCA4F

5/24/2017 7:24:23 AM G:\Projects\2015\Division 7 (Hatch Mott)\17BP7R101 (Rockingham 39)(90 33BBU 2BMR)\Structures\Drawings\Final\401_17BP7R101_SMU_BT2.dgn

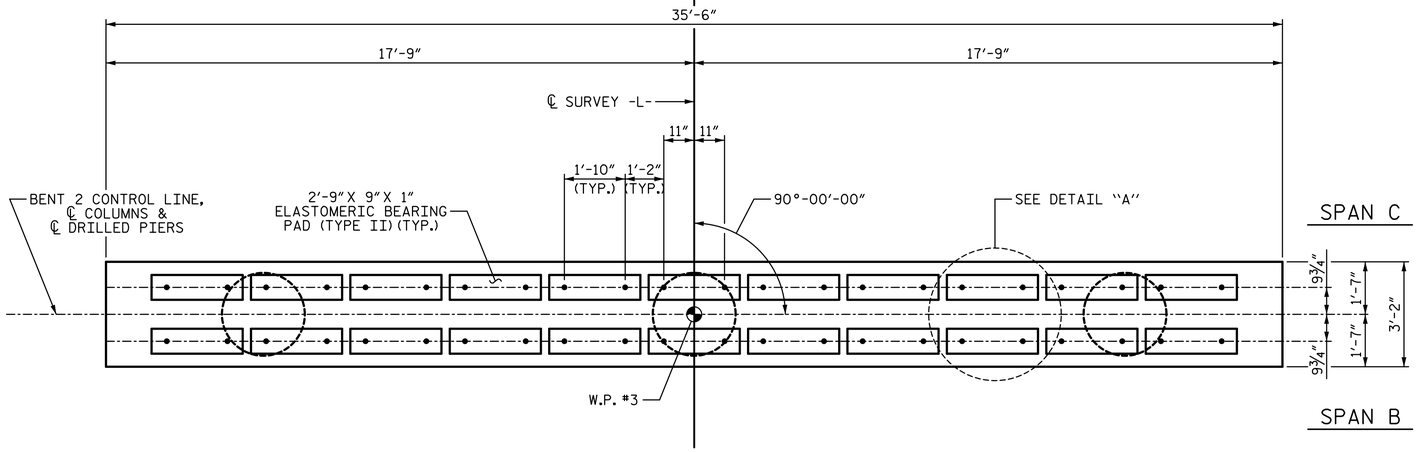

PLAN

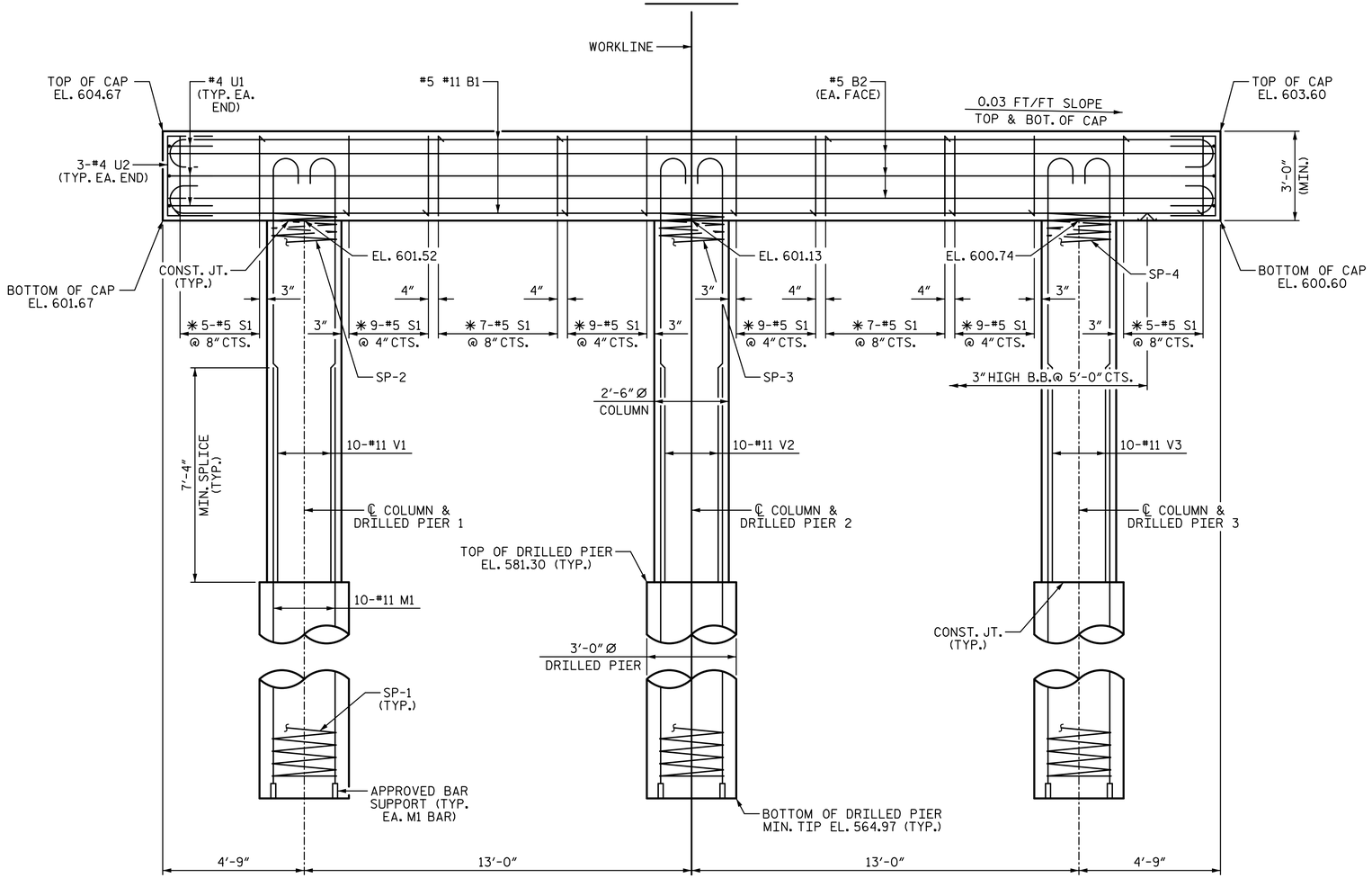

ELEVATION

DIMENSIONS & REINFORCING STEEL ARE TYPICAL FOR EACH COLUMN & DRILLED PIER UNLESS OTHERWISE NOTED.

NOTES:

STIRRUPS IN CAP MAY BE SHIFTED AS NECESSARY TO CLEAR DOWELS.

HOOKS ON "V" BARS MAY BE TURNED AS NECESSARY FOR PLACING REINFORCING STEEL.

FOR DRILLED PIERS, SEE SECTION 411 OF THE STANDARD SPECIFICATIONS.

ALL STEEL IN THE DRILLED PIERS IS INCLUDED IN THE PAY ITEMS FOR "REINFORCING STEEL" AND "SPIRAL COLUMN REINFORCING STEEL."

✳ INVERT ALTERNATE STIRRUPS.

THE LOCATION OF THE CONSTRUCTION JOINT IN THE DRILLED PIERS IS BASED ON AN APPROXIMATE GROUND LINE ELEVATION. IF THE CONSTRUCTION JOINT IS ABOVE THE ACTUAL GROUND LINE ELEVATION, THE CONTRACTOR SHALL PLACE THE CONSTRUCTION JOINT ONE FOOT BELOW THE GROUND LINE.

THE CONTRACTOR'S ATTENTION IS CALLED TO THE FACT THAT THE LONGITUDINAL REINFORCEMENT FOR DRILLED PIERS IS DETAILED WITH 3 FEET OF EXTRA LENGTH.

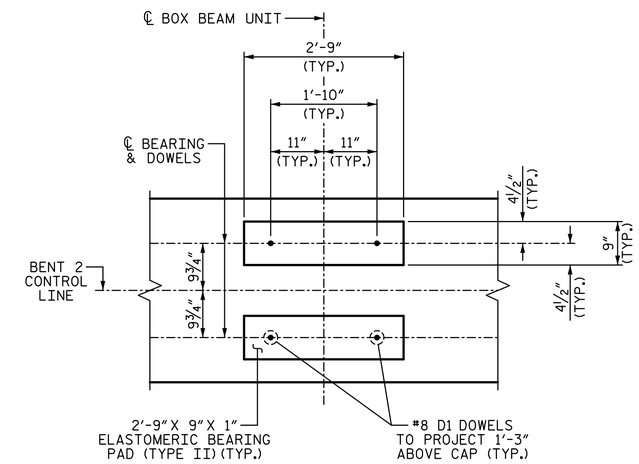

DETAIL "A"

DIMENSIONS ARE TYPICAL EACH BEARING

PROJECT NO. 17BP.7.R.101

ROCKINGHAM COUNTY

STATION: 15+60.00 -L-

SHEET 1 OF 2

STATE OF NORTH CAROLINA
DEPARTMENT OF TRANSPORTATION
RALEIGH

SUBSTRUCTURE

BENT 2

PLANS PREPARED BY:

SIMPSON ENGINEERS & ASSOCIATES
5640 Dillard Drive
Suite 200
Cary, NC 27518
(919) 852-0468
(919) 852-0598 (Fax)
www.simpsonengr.com
LICENSURE NO. C-2521

NORTH CAROLINA PROFESSIONAL SEAL 41268 ENGINEER BETSY S. COX
5/24/2017

DOCUMENT NOT CONSIDERED FINAL UNLESS ALL SIGNATURES COMPLETED

DRAWN BY:	T. BANKOVICH	DATE:	1-17
CHECKED BY:	B.S. COX	DATE:	1-17
DESIGN ENGINEER OF RECORD:	B.S. COX	DATE:	1-17

REVISIONS						SHEET NO.
NO.	BY:	DATE:	NO.	BY:	DATE:	S-22
1			3			TOTAL SHEETS
2			4			26

DocuSign Envelope ID: 17E46735-EAB2-424D-AFF4-B5B1F69CCA4F

5/24/2017 7:24:23 AM G:\Projects\2015\Division 7 (Hatch Mott)\17BP7R101 (Rockingham 39) (90 33BBU 2BMR)\Structures\Drawings\Final\401_17BP7R101_SMU_BT2.dgn

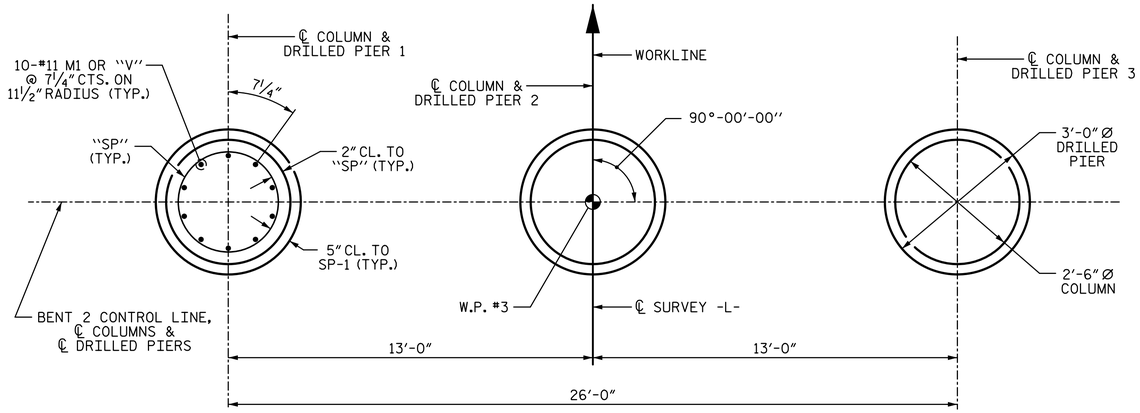

PLAN OF DRILLED PIERS & COLUMNS

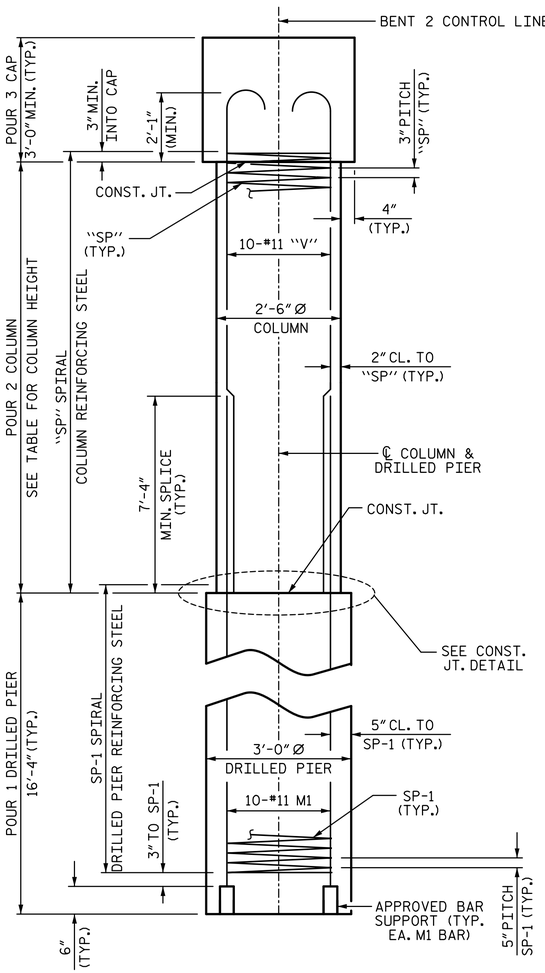

END ELEVATION

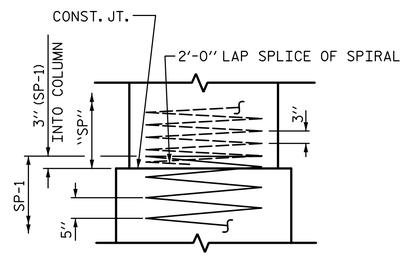

CONSTRUCTION JOINT DETAIL

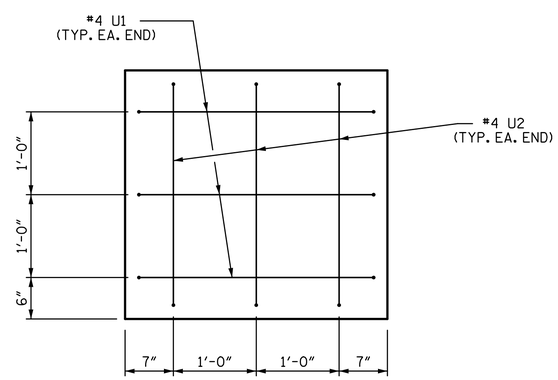

END OF CAP VIEW

(TYPICAL BOTH ENDS)

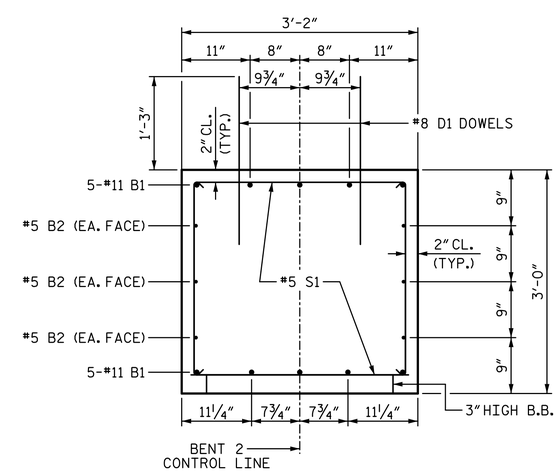

SECTION THRU CAP

COLUMN HEIGHT

COLUMN #1	COLUMN #2	COLUMN #3
20'-2⅝"	19'-9 15/16"	19'-5¼"

BAR TYPES

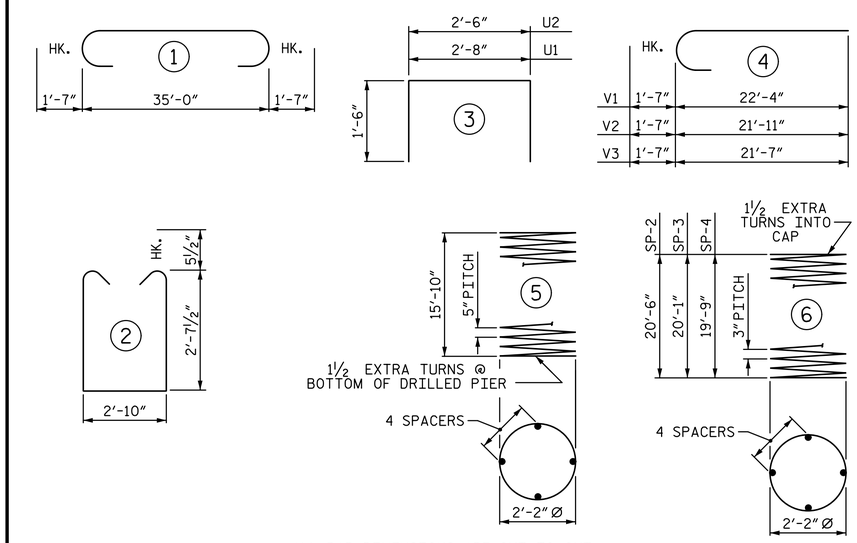

ALL BAR DIMENSIONS ARE OUT TO OUT

BILL OF MATERIAL

BENT 2

BAR	NO.	SIZE	TYPE	LENGTH	WEIGHT
B1	10	#11	1	38'-2"	2028
B2	6	#5	STR	35'-2"	220
D1	44	#8	STR	2'-3"	264
M1	30	#11	STR	26'-2"	4171
S1	60	#5	2	9'-0"	563
U1	6	#4	3	5'-8"	23
U2	6	#4	3	5'-6"	22
V1	10	#11	4	23'-11"	1271
V2	10	#11	4	23'-6"	1249
V3	10	#11	4	23'-2"	1231
REINFORCING STEEL					11042 LB

SP-1	3	*	5	266'-3"	833
SP-2	1	**	6	561'-2"	375
SP-3	1	**	6	547'-10"	366
SP-4	1	**	6	541'-2"	361
SPIRAL COLUMN REINF.					1935 LB

* THE SP-1 SPIRAL REINFORCING STEEL SHALL BE W31 OR D-31 COLD DRAWN WIRE OR #5 PLAIN OR DEFORMED BAR

** THE SP-2, SP-3 & SP-4 SPIRAL REINF. STEEL SHALL BE W20 OR D-20 COLD DRAWN WIRE OR #4 PLAIN OR DEFORMED BAR

CLASS A CONCRETE BREAKDOWN

POUR 2 (COLUMNS)	10.8 C.Y.
POUR 3 (CAP)	12.5 C.Y.
TOTAL CLASS A CONCRETE	23.3 CY

DRILLED PIERS:

DRILLED PIER CONCRETE POUR 1 (DRILLED PIERS)	12.8 C.Y.
3'-0" Ø DRILLED PIER NOT IN SOIL	24.00 LF
3'-0" Ø DRILLED PIER IN SOIL	25.00 LF
PERMANENT STEEL CASING FOR 3'-0" Ø DRILLED PIER	24.90 LF
CSL TUBES	214.00 LF

PROJECT NO. 17BP.7.R.101

ROCKINGHAM COUNTY

STATION: 15+60.00 -L-

SHEET 2 OF 2

STATE OF NORTH CAROLINA
DEPARTMENT OF TRANSPORTATION
RALEIGH

SUBSTRUCTURE

BENT 2

DRAWN BY: T. BANKOVICH DATE: 1-17
CHECKED BY: B.S. COX DATE: 1-17
DESIGN ENGINEER OF RECORD: B.S. COX DATE: 1-17

PLANS PREPARED BY:

SIMPSON ENGINEERS & ASSOCIATES
5640 Dillard Drive
Suite 200
Cary, NC 27518
(919) 852-0468
(919) 852-0598 (Fax)
www.slmpsonengr.com
LICENSURE NO. C-2521

NORTH CAROLINA PROFESSIONAL SEAL ENGINEER BETSY S. COX
5/24/2017

DOCUMENT NOT CONSIDERED FINAL UNLESS ALL SIGNATURES COMPLETED

REVISIONS							SHEET NO.
NO.	BY:	DATE:	NO.	BY:	DATE:		S-23
1			3				TOTAL SHEETS
2			4				26

DocuSign Envelope ID: 17E46735-EAB2-424D-AFF4-B5B1F69CCA4F

5/24/2017 7:24:23 AM G:\Projects\2015\Division 7 (Hatch Mott)\17BP7R101 (Rockingham 39)(90 33BBU 2BMR)\Structures\Drawings\Final\401_17BP7R101_SMU_RR.dgn

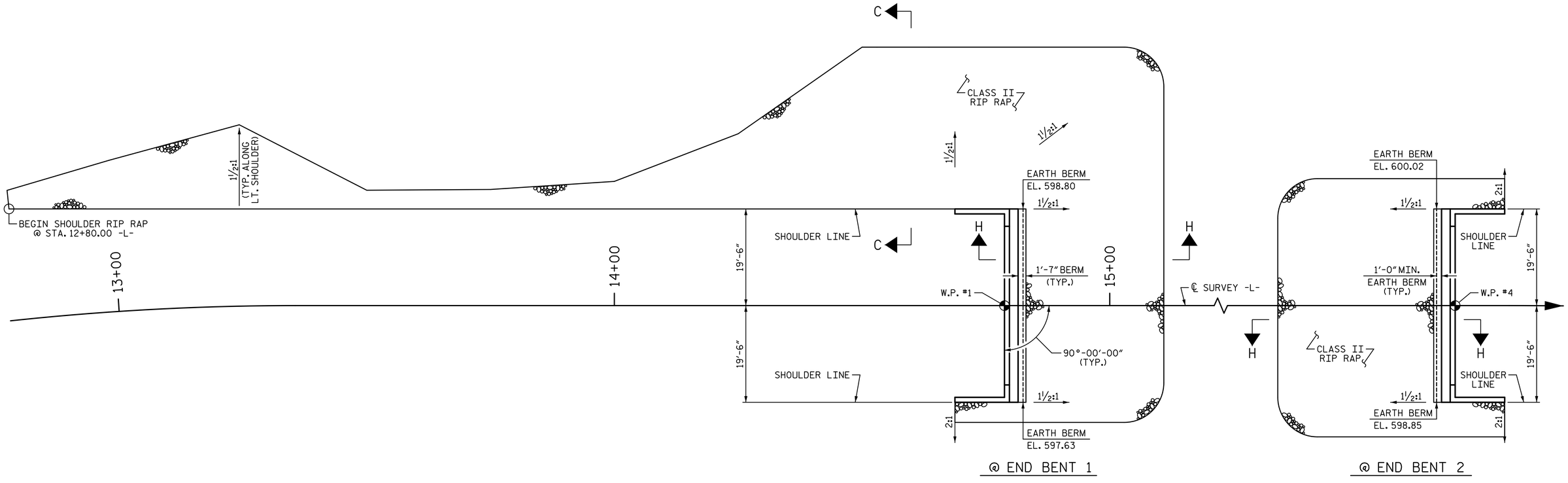

PLAN OF RIP RAP

ESTIMATED QUANTITIES		
BRIDGE @ STA. 15+60.00 -L-	RIP RAP CLASS II (2'-0" THICK)	GEOTEXTILE FOR DRAINAGE
	TONS	SQUARE YARDS
END BENT 1	605	675
END BENT 2	215	240

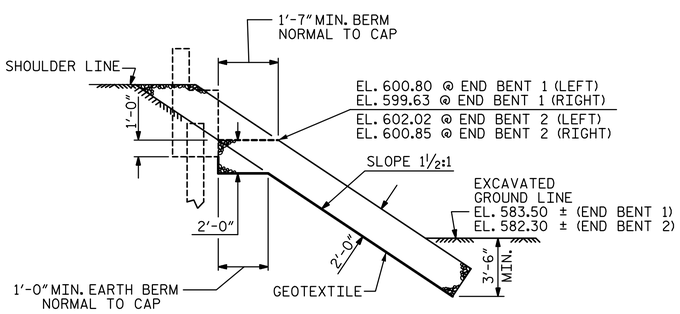

SECTION H-H

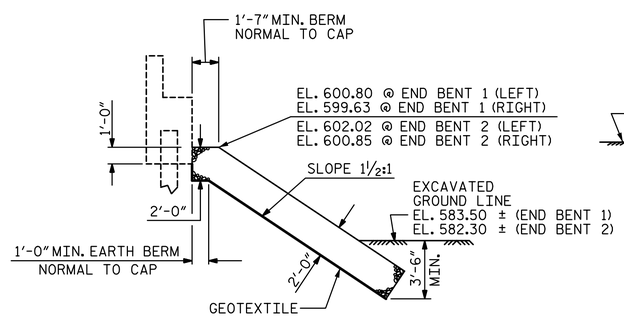

℄ SECTION
BERM RIP RAPPED

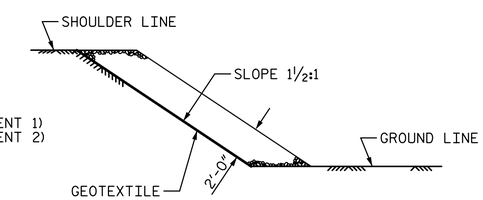

SECTION C-C

PROJECT NO. 17BP.7.R.101
ROCKINGHAM COUNTY
STATION: 15+60.00 -L-

STATE OF NORTH CAROLINA
DEPARTMENT OF TRANSPORTATION
RALEIGH

RIP RAP DETAILS

PLANS PREPARED BY:
SIMPSON ENGINEERS & ASSOCIATES
5640 Dillard Drive
Suite 200
Cary, NC 27518
(919) 852-0468
(919) 852-0598 (Fax)
www.simpsonengr.com
LICENSURE NO. C-2521

NORTH CAROLINA PROFESSIONAL SEAL 11268 ENGINEER BETSY S. COX
5/24/2017

DOCUMENT NOT CONSIDERED FINAL
UNLESS ALL SIGNATURES COMPLETED

DRAWN BY:	T. BANKOVICH	DATE:	1-17
CHECKED BY:	B.S. COX	DATE:	1-17
DESIGN ENGINEER OF RECORD:	B.S. COX	DATE:	1-17

REVISIONS						SHEET NO.
NO.	BY:	DATE:	NO.	BY:	DATE:	S-24
1			3			TOTAL SHEETS
2			4			26

DocuSign Envelope ID: 17E46735-EAB2-424D-AFF4-B5B1F69CCA4F

5/24/2017 7:24:23 AM G:\Projects\2015\Division 7 (Hatch Mott)\17BP7R101 (Rockingham 39) (90 33BBU 2BMR)\Structures\Drawings\Final\401_17BP7R101_SMU_AS.dgn

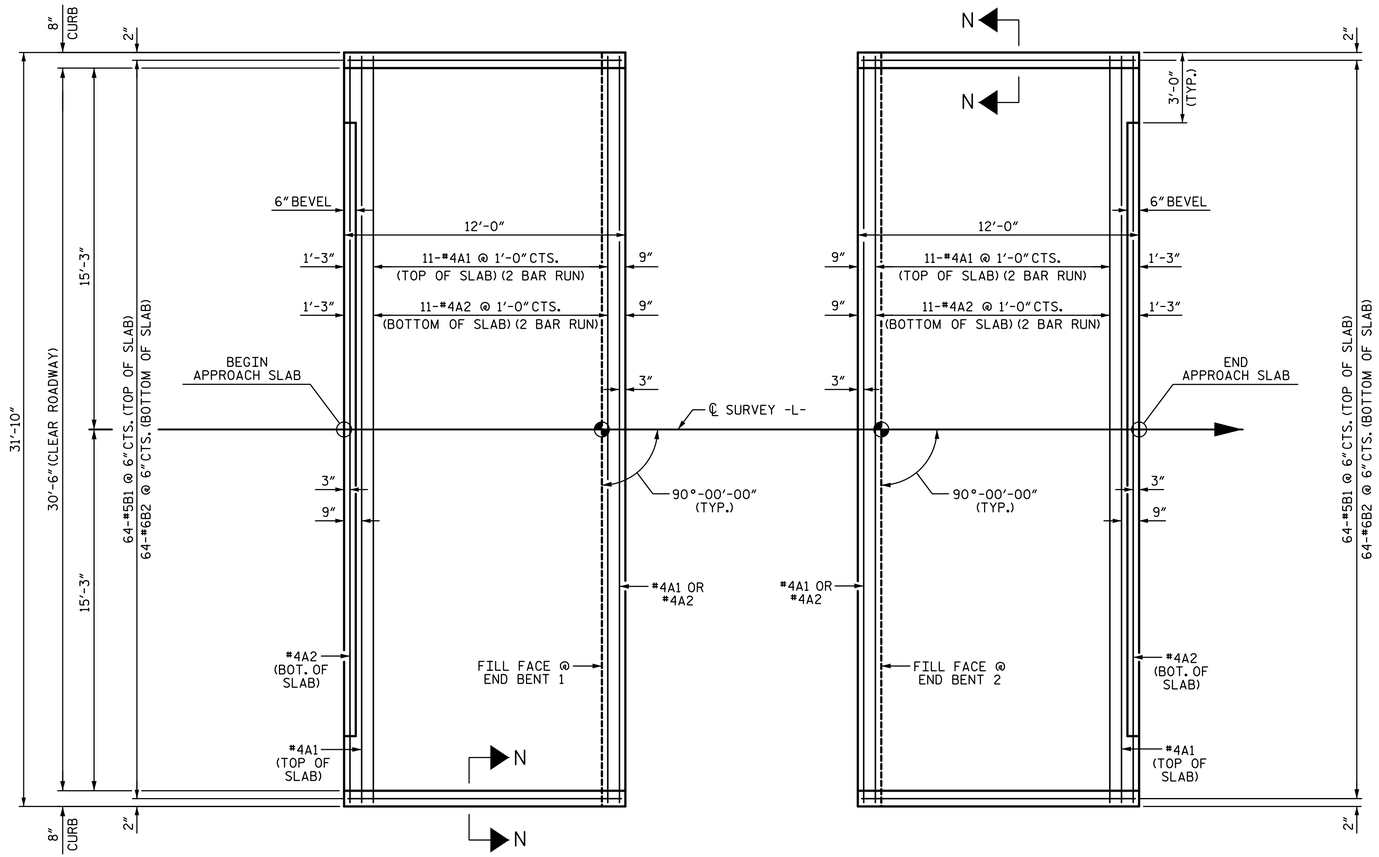

PLAN @ END BENT 1

PLAN @ END BENT 2

DIMENSIONS SHOWN ARE TYPICAL FOR BOTH APPROACH SLABS

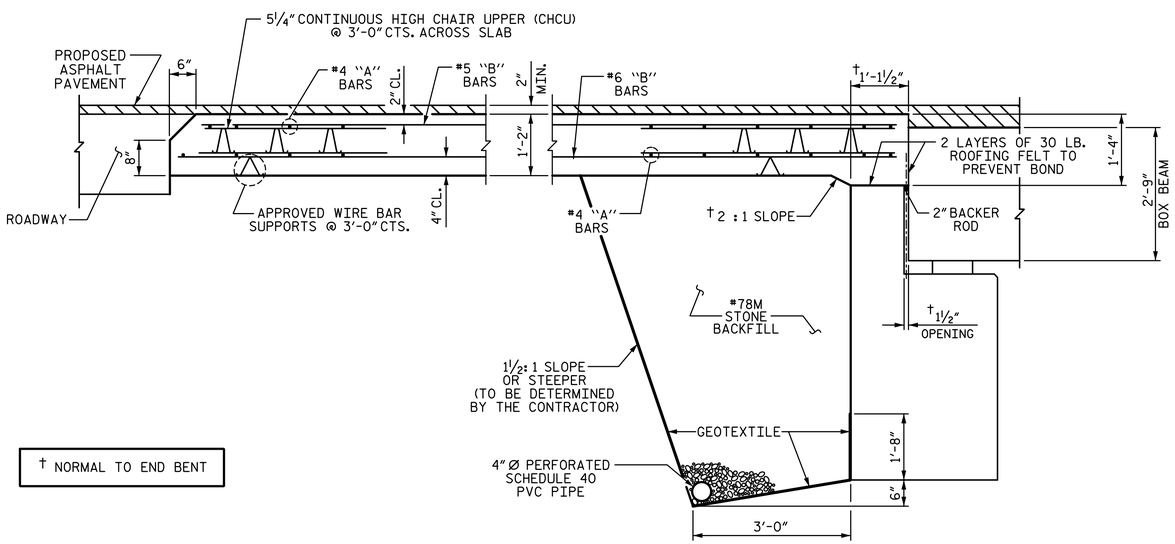

† NORMAL TO END BENT

SECTION THRU SLAB

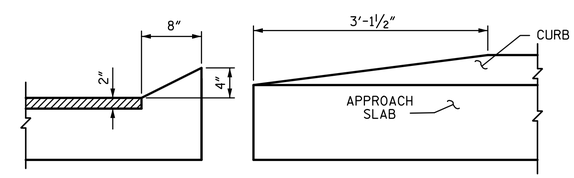

SECTION N-N

END OF CURB WITHOUT SHOULDER BERM GUTTER

CURB DETAILS

NOTES:

FOR BRIDGE APPROACH FILL INCLUDING GEOTEXTILE, 4" Ø DRAINAGE PIPE, AND #78M STONE BACKFILL, SEE ROADWAY PLANS.

GEOTEXTILE SHALL BE TYPE 1 IN ACCORDANCE WITH THE STANDARD SPECIFICATIONS SECTION 1056.

#78M STONE BACKFILL (CLASS V SELECT MATERIAL) SHALL BE IN ACCORDANCE WITH STANDARD SPECIFICATIONS SECTION 1016.

#78M STONE BACKFILL IS TO BE CONTINUOUS ALONG FILL FACE OF BACKWALL FROM OUTSIDE EDGE TO OUTSIDE EDGE OF APPROACH SLAB.

FOR THE 4" Ø DRAINAGE PIPE OUTLET(S), SEE ROADWAY STANDARD DRAWINGS.

AREA BETWEEN THE WINGWALL AND APPROACH SLAB SHALL BE GRADED TO DRAIN THE WATER AWAY FROM THE FILL FACE OF THE BRIDGE AND SHALL BE PAVED. SEE ROADWAY PLANS.

APPROACH SLAB GROOVING IS NOT REQUIRED.

BILL OF MATERIAL

APPROACH SLAB AT EB 1

BAR	NO.	SIZE	TYPE	LENGTH	WEIGHT
✳ A1	26	#4	STR	16'-9"	291
A2	26	#4	STR	16'-8"	289
✳ B1	64	#5	STR	11'-2"	745
B2	64	#6	STR	11'-8"	1121
REINFORCING STEEL				LB	1410
✳ EPOXY COATED REINFORCING STEEL				LB	1036
CLASS AA CONCRETE				CY	16.8

APPROACH SLAB AT EB 2

BAR	NO.	SIZE	TYPE	LENGTH	WEIGHT
✳ A1	26	#4	STR	16'-9"	291
A2	26	#4	STR	16'-8"	289
✳ B1	64	#5	STR	11'-2"	745
B2	64	#6	STR	11'-8"	1121
REINFORCING STEEL				LB	1410
✳ EPOXY COATED REINFORCING STEEL				LB	1036
CLASS AA CONCRETE				CY	16.8

SPLICE CHART

BAR SIZE	EPOXY COATED	UNCOATED
#4	2'-0"	1'-9"
#5	2'-6"	2'-2"
#6	3'-10"	2'-7"

PROJECT NO. 17BP.7.R.101

ROCKINGHAM COUNTY

STATION: 15+60.00 -L-

SHEET 1 OF 2

STATE OF NORTH CAROLINA
DEPARTMENT OF TRANSPORTATION
RALEIGH

BRIDGE APPROACH SLAB FOR PRESTRESSED CONCRETE BOX BEAM UNIT
(SUB-REGIONAL TIER - 90° SKEW)

PLANS PREPARED BY:
SIMPSON ENGINEERS & ASSOCIATES
5640 Dillard Drive
Suite 200
Cary, NC 27518
(919) 852-0468
(919) 852-0598 (Fax)
www.simpsonengr.com
LICENSURE NO. C-2521

NORTH CAROLINA PROFESSIONAL SEAL 11268 ENGINEER BETSY S. COX
5/24/2017

DOCUMENT NOT CONSIDERED FINAL UNLESS ALL SIGNATURES COMPLETED

DRAWN BY:	T. BANKOVICH	DATE: 1-17
CHECKED BY:	B.S. COX	DATE: 1-17
DESIGN ENGINEER OF RECORD:	B.S. COX	DATE: 1-17

REVISIONS

NO.	BY:	DATE:	NO.	BY:	DATE:
1			3		
2			4		

SHEET NO. S-25

TOTAL SHEETS 26

DocuSign Envelope ID: 17E46735-EAB2-424D-AFF4-B5B1F69CCA4F

5/24/2017 7:24:24 AM G:\Projects\2015\Division 7 (Hatch Mott)\17BP7R101 (Rockingham 39)(90 33BBU 2BMR)\Structures\Drawings\Final\401_17BP7R101_SMU_AS.dgn

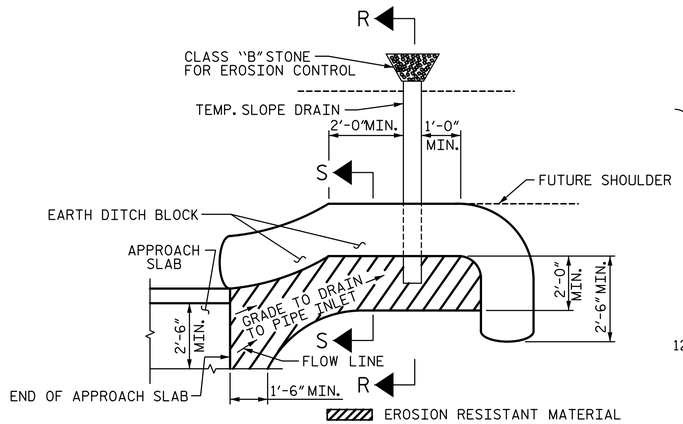

NOTE: IMMEDIATELY AFTER THE CONSTRUCTION OF THE APPROACH SLAB, THE CONTRACTOR SHALL PROVIDE TEMPORARY BERM AND SLOPE DRAIN. CONTRACTOR SHALL GRADE TO PIPE INLET AND PROVIDE EROSION RESISTANT MATERIAL AS SHOWN. THE EROSION RESISTANT MATERIAL SHALL BE EITHER 1) ASPHALT PLANT MIX, TYPE 1 OR TYPE 2, MIN. 2" DEPTH, 2) EROSION CONTROL MAT, OR 3) CONCRETE, AS DIRECTED BY THE ENGINEER. THE SLOPE DRAIN SHALL CONSIST OF A NON-PERFORATED TEMPORARY DRAINAGE PIPE, 12 INCHES IN DIAMETER.

PLAN VIEW

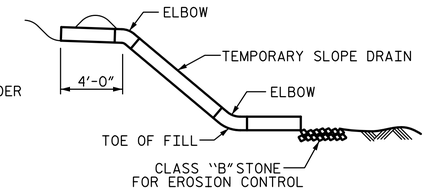

SECTION R-R

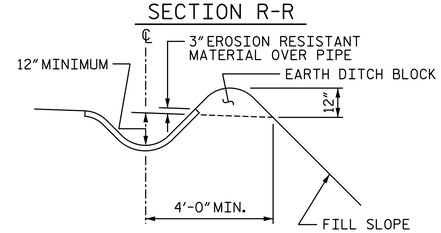

SECTION S-S

TEMPORARY BERM AND SLOPE DRAIN DETAILS

(TO BE USED WHEN SHOULDER BERM GUTTER IS REQUIRED)

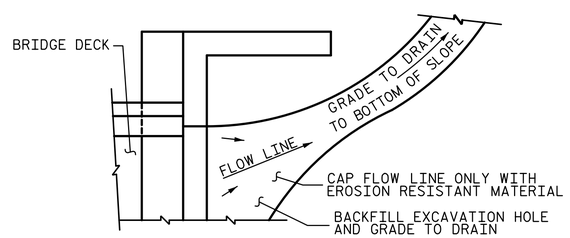

NOTE: IF THE APPROACH SLAB IS NOT CONSTRUCTED IMMEDIATELY AFTER THE BACKFILLING OF THE END BENT EXCAVATION, GRADE TO DRAIN TO THE BOTTOM OF THE SLOPE AND PROVIDE EROSION RESISTANT MATERIAL, SUCH AS FIBERGLASS ROVING OR AS DIRECTED BY THE ENGINEER TO PREVENT SOIL EROSION AND TO PROTECT THE AREA ADJACENT TO THE STRUCTURE. THE CONTRACTOR WILL BE REQUIRED TO REMOVE THESE MATERIALS PRIOR TO CONSTRUCTION OF THE APPROACH SLAB.

TEMPORARY DRAINAGE DETAIL

PROJECT NO. 17BP.7.R.101
ROCKINGHAM COUNTY
STATION: 15+60.00 -L-

SHEET 2 OF 2

STATE OF NORTH CAROLINA
DEPARTMENT OF TRANSPORTATION
RALEIGH

BRIDGE APPROACH SLAB DETAILS

PLANS PREPARED BY:

SIMPSON ENGINEERS & ASSOCIATES
5640 Dillard Drive
Suite 200
Cary, NC 27518
(919) 852-0468
(919) 852-0598 (Fax)
www.simpsonengr.com
LICENSURE NO. C-2521

NORTH CAROLINA PROFESSIONAL SEAL 11268 ENGINEER BETSY S. COX
5/24/2017

DOCUMENT NOT CONSIDERED FINAL UNLESS ALL SIGNATURES COMPLETED

DRAWN BY:	T. BANKOVICH	DATE:	1-17
CHECKED BY:	B.S. COX	DATE:	1-17
DESIGN ENGINEER OF RECORD:	B.S. COX	DATE:	1-17

REVISIONS						SHEET NO.
NO.	BY:	DATE:	NO.	BY:	DATE:	S-26
1			3			TOTAL SHEETS
2			4			26

DocuSign Envelope ID: 17E46735-EAB2-424D-AFF4-B5B1F69CCA4F

5/24/2017 7:24:24 AM G:\Projects\2015\Division 7 (Hatch Mott)\17BP7R101 (Rockingham 39) (90 33BBU 2BMR)\Structures\Drawings\Final\401_17BP7R101_SMU_SN.dgn

STANDARD NOTES

DESIGN DATA:

SPECIFICATIONS	A.A.S.H.T.O. (CURRENT)
LIVE LOAD	SEE PLANS
IMPACT ALLOWANCE	SEE A.A.S.H.T.O.
STRESS IN EXTREME FIBER OF	
STRUCTURAL STEEL - AASHTO M270 GRADE 36	20,000 LBS. PER SQ. IN.
- AASHTO M270 GRADE 50W	27,000 LBS. PER SQ. IN.
- AASHTO M270 GRADE 50	27,000 LBS. PER SQ. IN.
REINFORCING STEEL IN TENSION	
GRADE 60	24,000 LBS. PER SQ. IN.
CONCRETE IN COMPRESSION	1,200 LBS. PER SQ. IN.
CONCRETE IN SHEAR	SEE A.A.S.H.T.O.
STRUCTURAL TIMBER - TREATED OR	
UNTREATED - EXTREME FIBER STRESS	1,800 LBS. PER SQ. IN.
COMPRESSION PERPENDICULAR TO GRAIN OF TIMBER	375 LBS. PER SQ. IN.
EQUIVALENT FLUID PRESSURE OF EARTH	30 LBS. PER CU. FT. (MINIMUM)

MATERIAL AND WORKMANSHIP:

EXCEPT AS MAY OTHERWISE BE SPECIFIED ON PLANS OR IN THE SPECIAL PROVISIONS, ALL MATERIAL AND WORKMANSHIP SHALL BE IN ACCORDANCE WITH THE 2012 "STANDARD SPECIFICATIONS FOR ROADS AND STRUCTURES" OF THE N. C. DEPARTMENT OF TRANSPORTATION.

STEEL SHEET PILING FOR PERMANENT OR TEMPORARY APPLICATIONS SHALL BE HOT ROLLED.

CONCRETE:

UNLESS OTHERWISE REQUIRED ON PLANS, CLASS A CONCRETE SHALL BE USED FOR ALL PORTIONS OF ALL STRUCTURES WITH THE EXCEPTION THAT: CLASS AA CONCRETE SHALL BE USED IN BRIDGE SUPERSTRUCTURES, ABUTMENT BACKWALLS, AND APPROACH SLABS; AND CLASS B CONCRETE SHALL BE USED FOR SLOPE PROTECTION AND RIP RAP.

CONCRETE CHAMFERS:

UNLESS OTHERWISE NOTED ON THE PLANS, ALL EXPOSED CORNERS ON STRUCTURES SHALL BE CHAMFERED 3/4" WITH THE FOLLOWING EXCEPTIONS: TOP CORNERS OF CURBS MAY BE ROUNDED TO 1-1/2" RADIUS WHICH IS BUILT INTO CURB FORMS; CORNERS OF TRANSVERSE FLOOR EXPANSION JOINTS SHALL BE ROUNDED WITH A 1/4" FINISHING TOOL UNLESS OTHERWISE REQUIRED ON PLANS; AND CORNERS OF EXPANSION JOINTS IN THE ROADWAY FACES AND TOPS OF CURBS AND SIDEWALKS SHALL BE ROUNDED TO A 1/4" RADIUS WITH A FINISHING STONE OR TOOL UNLESS OTHERWISE REQUIRED ON PLANS.

DOWELS:

DOWELS WHEN INDICATED ON PLANS AS FOR CULVERT EXTENSIONS, SHALL BE EMBEDDED AT LEAST 12" INTO THE OLD CONCRETE AND GROUTED INTO PLACE WITH 1:2 CEMENT MORTAR.

ALLOWANCE FOR DEAD LOAD DEFLECTION, SETTLEMENT: ETC. IN CASTING SUPERSTRUCTURES:

BRIDGES SHALL BE BUILT ON THE GRADE OR VERTICAL CURVE SHOWN ON PLANS. SLABS, CURBS AND PARAPETS SHALL CONFORM TO THE GRADE OR CURVE.

ALL DIMENSIONS WHICH ARE GIVEN IN SECTION AND ARE AFFECTED BY DEAD LOAD DEFLECTIONS ARE DIMENSIONS AT CENTER LINE OF BEARING UNLESS OTHERWISE NOTED ON PLANS. IN SETTING FORMS FOR STEEL BEAM BRIDGES AND PRESTRESSED CONCRETE GIRDER BRIDGES, ADJUSTMENTS SHALL BE MADE DUE TO THE DEAD LOAD DEFLECTIONS FOR THE ELEVATIONS SHOWN. WHERE BLOCKS ARE SHOWN OVER BEAMS FOR BUILDING UP TO THE SLAB, THE VERTICAL DIMENSIONS OF THE BLOCKS SHALL BE ADJUSTED BETWEEN BEARINGS TO COMPENSATE FOR DEAD LOAD DEFLECTIONS, VERTICAL CURVE ORDINATE, AND ACTUAL BEAM CAMBER. WHERE BOTTOM OF SLAB IS IN LINE WITH BOTTOM OF TOP FLANGES, DEPTH OF SLAB BETWEEN BEARINGS SHALL BE ADJUSTED TO COMPENSATE FOR DEAD LOAD DEFLECTION, VERTICAL CURVE ORDINATE, AND ACTUAL BEAM CAMBER.

IN SETTING FALSEWORK AND FORMS FOR REINFORCED CONCRETE SPANS, AN ALLOWANCE SHALL BE MADE FOR DEAD LOAD DEFLECTIONS, SETTLEMENT OF FALSEWORK, AND PERMANENT CAMBER WHICH SHALL BE PROVIDED FOR IN ADDITION TO THE ELEVATIONS SHOWN. AFTER REMOVAL OF THE FALSEWORK, THE FINISHED STRUCTURES SHALL CONFORM TO THE PROFILE AND ELEVATIONS SHOWN ON THE PLANS AND CONSTRUCTION ELEVATIONS FURNISHED BY THE ENGINEER.

DETAILED DRAWINGS FOR FALSEWORK OR FORMS FOR BRIDGE SUPERSTRUCTURE AND ANY STRUCTURE OR PARTS OF A STRUCTURE AS NOTED ON THE PLANS SHALL BE SUBMITTED TO THE ENGINEER FOR APPROVAL BEFORE CONSTRUCTION OF THE FALSEWORK OR FORMS IS STARTED.

REINFORCING STEEL:

ALL REINFORCING STEEL SHALL BE DEFORMED. DIMENSIONS RELATIVE TO PLACEMENT OF REINFORCING ARE TO CENTERS OF BARS UNLESS OTHERWISE INDICATED IN THE PLANS. DIMENSIONS ON BAR DETAILS ARE TO CENTERS OF BARS OR ARE OUT TO OUT AS INDICATED ON PLANS.

WIRE BAR SUPPORTS SHALL BE PROVIDED FOR REINFORCING STEEL WHERE INDICATED ON THE PLANS. WHEN BAR SUPPORT PIECES ARE PLACED IN CONTINUOUS LINES, THEY SHALL BE SO PLACED THAT THE ENDS OF THE SUPPORTING WIRES SHALL BE LAPPED TO LOCK LEGS ON ADJOINING PIECES.

STRUCTURAL STEEL:

AT THE CONTRACTOR'S OPTION, HE MAY SUBSTITUTE 7/8" Ø SHEAR STUDS FOR THE 3/4" Ø STUDS SPECIFIED ON THE PLANS. THIS SUBSTITUTION SHALL BE MADE AT THE RATE OF 3 - 7/8" Ø STUDS FOR 4 - 3/4" Ø STUDS, AND STUD SPACING CHANGES SHALL BE MADE AS NECESSARY TO PROVIDE THE SAME EQUIVALENT NUMBER OF 7/8" Ø STUDS ALONG THE BEAM AS SHOWN FOR 3/4" Ø STUDS BASED ON THE RATIO OF 3 - 7/8" Ø STUDS FOR 4 - 3/4" Ø STUDS. STUDS OF THE LENGTH SPECIFIED ON THE PLANS MUST BE PROVIDED. THE MAXIMUM SPACING SHALL BE 2'-0".

EXCEPT AT THE INTERIOR SUPPORTS OF CONTINUOUS BEAMS WHERE THE COVER PLATE IS IN CONTACT WITH BEARING PLATE, THE CONTRACTOR MAY, AT HIS OPTION, SUBSTITUTE FOR THE COVER PLATES DESIGNATED ON THE PLANS COVER PLATES OF THE EQUIVALENT AREA PROVIDED THESE PLATES ARE AT LEAST 5/16" IN THICKNESS AND DO NOT EXCEED A WIDTH EQUAL TO THE FLANGE WIDTH LESS 2" OR A THICKNESS EQUAL TO 2 TIMES THE FLANGE THICKNESS. THE SIZE OF FILLET WELDS SHALL CONFORM TO THE REQUIREMENTS OF THE CURRENT ANSI/AASHTO/AWS "BRIDGE WELDING CODE". ELECTROSLAG WELDING WILL NOT BE PERMITTED.

WITH THE SOLE EXCEPTION OF EDGES AT SURFACES WHICH BEAR ON OTHER SURFACES, ALL SHARP EDGES AND ENDS OF SHAPES AND PLATES SHALL BE SLIGHTLY ROUNDED BY SUITABLE MEANS TO A RADIUS OF APPROXIMATELY 1/16 INCH OR EQUIVALENT FLAT SURFACE AT A SUITABLE ANGLE PRIOR TO PAINTING, GALVANIZING, OR METALLIZING.

HANDRAILS AND POSTS:

METAL STANDARDS AND FACES OF THE CONCRETE END POSTS FOR THE METAL RAIL SHALL BE SET NORMAL TO THE GRADE OF THE CURB, UNLESS OTHERWISE SHOWN ON PLANS. THE METAL RAIL AND TOPS OF CONCRETE POSTS USED WITH THE ALUMINUM RAIL SHALL BE BUILT PARALLEL TO THE GRADE OF THE CURB.

METAL HANDRAILS SHALL BE IN ACCORDANCE WITH THE PLANS. RAILS SHALL BE AS MANUFACTURED FOR BRIDGE RAILING. CASTINGS SHALL BE OF A UNIFORM APPEARANCE. FINS AND OTHER DEFORMATIONS RESULTING FROM CASTING OR OTHERWISE SHALL BE REMOVED IN A MANNER SO THAT A UNIFORM COLORING OF THE COMPLETED CASTING SHALL BE OBTAINED. CASTINGS WITH DISCOLORATIONS OR OF NON-UNIFORM COLORING WILL NOT BE ACCEPTED. CERTIFIED MILL REPORTS ARE REQUIRED FOR METAL RAILS AND POSTS.

SPECIAL NOTES:

GENERALLY, IN CASE OF DISCREPANCY, THIS STANDARD SHEET OF NOTES SHALL GOVERN OVER THE SPECIFICATIONS, BUT THE REMAINDER OF THE PLANS SHALL GOVERN OVER NOTES HEREON, AND SPECIAL PROVISIONS SHALL GOVERN OVER ALL. SEE SPECIFICATIONS ARTICLE 105-4.

ENGLISH

JANUARY, 1990