STATE OF NORTH CAROLINA
DEPARTMENT OF TRANSPORTATION
HIGHWAY DIVISION **7**

PROPOSAL

DATE AND TIME OF BID OPENING: OCTOBER 6, 2016 AT 2:00 P.M.

CONTRACT ID: **D7POC182**

WBS ELEMENT NO.: **41737.6**

COUNTY: **ALAMANCE**

LOCATION: **MAINTENANCE YARD**

TYPE OF WORK: **CONSTRUCTION OFA CONCRETE PAD FOR A 7000 GALLON EMULSION TANK**

NOTICE:

ALL BIDDERS SHALL COMPLY WITH ALL APPLICABLE LAWS REGULATING THE PRACTICE OF GENERAL CONTRACTING AS CONTAINED IN CHAPTER 87 OF THE GENERAL STATUTES OF NORTH CAROLINA WHICH REQUIRES THE BIDDER TO BE LICENSED BY THE N.C. LICENSING BOARD FOR CONTRACTORS WHEN BIDDING ON ANY NON-FEDERAL AID PROJECT WHERE THE BID IS $30,000 OR MORE, EXCEPT FOR CERTAIN SPECIALTY WORK AS DETERMINED BY THE LICENSING BOARD. BIDDERS SHALL ALSO COMPLY WITH ALL OTHER APPLICABLE LAWS REGULATING THE PRACTICES OF ELECTRICAL, PLUMBING, HEATING AND AIR CONDITIONING AND REFRIGERATION CONTRACTING AS CONTAINED IN CHAPTER 87 OF THE GENERAL STATUTES OF NORTH CAROLINA. NOTWITHSTANDING THESE LIMITATIONS ON BIDDING, THE BIDDER WHO IS AWARDED ANY FEDERAL - AID FUNDED PROJECT SHALL COMPLY WITH CHAPTER 87 OF THE GENERAL STATUTES OF NORTH CAROLINA FOR LICENSING REQUIREMENTS WITHIN 60 CALENDAR DAYS OF BID OPENING.

THIS IS A ROADWAY PROJECT. **BID BONDS ARE NOT REQUIRED.**

_____

NAME OF BIDDER

_____

ADDRESS OF BIDDER

PROPOSAL FOR THE CONSTRUCTION OF

CONTRACT No. D7POC182 IN ALAMANCE COUNTY, NORTH CAROLINA

Date_____ 20_____

DEPARTMENT OF TRANSPORTATION,

RALEIGH, NORTH CAROLINA

The Bidder has carefully examined the location of the proposed work to be known as Contract No. **D7POC182**; has carefully examined the plans and specifications, which are acknowledged to be part of the proposal, the special provisions, the proposal, the form of contrac; and thoroughly understands the stipulations, requirements and provisions. The undersigned Bidder agrees to provide all necessary machinery, tools, labor, and other means of construction; and to do all the work and to furnish all materials, except as otherwise noted, necessary to perform and complete the said contract in accordance with *the 2012 Standard Specifications for Roads and Structures* by the dates(s) specified in the Project Special Provisions and in accordance with the requirements of the Engineer, and at the unit or lump sum prices, as the case may be, for the various items given on the sheets contained herein.

The Bidder shall provide and furnish all the materials, machinery, implements, appliances and tools, and perform the work and required labor to construct and complete State Highway Contract No. **D7POC182** in **Alamance County**, for the unit or lump sum prices, as the case may be, bid by the Bidder in his bid and according to the proposal, plans, and specifications prepared by said Department, which proposal, plans, and specifications show the details covering this project, and hereby become a part of this contract.

The published volume entitled *North Carolina Department of Transportation, Raleigh, Standard Specifications for Roads and Structures, January 2012* with all amendments and supplements thereto, is by reference incorporated into and made a part of this contract; that, except as herein modified, all the construction and work included in this contract is to be done in accordance with the specifications contained in said volume, and amendments and supplements thereto, under the direction of the Engineer.

If the proposal is accepted and the award is made, the contract is valid only when signed either by the Contract Officer or such other person as may be designated by the Secretary to sign for the Department of Transportation. The conditions and provisions herein cannot be changed except over the signature of the said Contract Officer or Division Engineer.

The quantities shown in the itemized proposal for the project are considered to be approximate only and are given as the basis for comparison of bids. The Department of Transportation may increase or decrease the quantity of any item or portion of the work as may be deemed necessary or expedient.

An increase or decrease in the quantity of an item will not be regarded as sufficient ground for an increase or decrease in the unit prices, nor in the time allowed for the completion of the work, except as provided for the contract.

TABLE OF CONTENTS

INSTRUCTIONS TO BIDDERS 4
PROJECT SPECIAL PROVISIONS 5
GENERAL 5
DIVISION LET CONTRACT PREQUALIFICATION: 5
BOND REQUIREMENTS – No Bonds Required 5
CONTRACT TIME AND LIQUIDATED DAMAGES: 6
NO MAJOR CONTRACT ITEMS: 6
NO SPECIALTY ITEMS: 6
SCHEDULE OF ESTIMATED COMPLETION PROGRESS: 6
MINORITY BUSINESS ENTERPRISE AND WOMEN BUSINESS ENTERPRISE (DIVISIONS): 6
SUBSURFACE INFORMATION: 20
SUBSURFACE INFORMATION: 20
LOCATING EXISTING UNDERGROUND UTILITIES: 20
RESOURCE CONSERVATION AND ENV. SUSTAINABLE PRACTICES: 20
DOMESTIC STEEL: 21
OUTSOURCING OUTSIDE THE USA: 21
IRAN DIVESTMENT ACT: 22
GIFTS FROM VENDORS AND CONTRACTORS: 22
LIABILITY INSURANCE: 23
STATE HIGHWAY ADMINISTRATOR TITLE CHANGE: 23
SUBLETTING OF CONTRACT: 23
PROJECT SPECIAL PROVISIONS 23
CONCRETE PAD: 23
MATERIALS: 24
GROUT PRODUCTION AND DELIVERY: 34
STANDARD SPECIAL PROVISIONS 38
AVAILABILITY OF FUNDS – TERMINATION OF CONTRACTS 38
ERRATA 38
PLANT AND PEST QUARANTINES 40
MINIMUM WAGES 41
AWARD OF CONTRACT 41
ON-THE-JOB TRAINING 46
NAME CHANGE FOR NCDENR 49
COMPENSATION: 49
EXECUTION OF BID 50
DEBARMENT CERTIFICATION 56
LISTING OF MBE/WBE SUBCONTRACTORS 58
ADDENDA 60
CONTRACT BID FORM D7POC182 61
EXECUTION OF CONTRACT 62

INSTRUCTIONS TO BIDDERS

PLEASE READ ALL INSTRUCTIONS CAREFULLY
BEFORE PREPARING AND SUBMITTING YOUR BID.

All bids shall be prepared and submitted in accordance with the following requirements. Failure to comply with any requirement may cause the bid to be considered irregular and may be grounds for rejection of the bid.

1. Download the entire proposal from the Connect NCDOT website, bind and return the entire proposal with your bid.
2. The Bidder shall submit a unit price for every item. *****Unit Prices shall be rounded off by the bidder to contain no more than TWO decimal places.**
3. An amount bid shall be entered for every item.
4. Changes to any entry shall be made by marking through the entry in ink and making the correct entry adjacent thereto in ink. A representative of the Bidder shall initial the change in ink. **Do not use correction fluid, correction tape or similar product to make corrections.**
5. The bid shall be properly executed on the included **Execution of Bid – Non-collusion Affidavit, Debarment Certification and Gift Ban Certification** form. All bids shall show the following information:
   a. Name of corporation, partnership, limited liability company, joint venture, individual or firm, submitting bid.
   b. Corporations that have a corporate seal should include it on the bid.
   c. Name of individual or representative submitting bid and position or title held on behalf of the bidder.
   d. Name, signature, and position or title of witness.
   e. Completed attestation by Notary Public
6. **Note: Signer, Witness and Notary Public must be different individuals.**
7. The bid shall not contain any unauthorized additions, deletions, or conditional bids.
8. The Bidder shall not add any provision reserving the right to accept or reject an award, or to enter into a contract pursuant to an award.
9. **Addenda shall be acknowledged on the "Addenda" page found in the proposal.**
10. **Questions shall be emailed to** cthuskins@ncdot.gov **a minimum of five (5) days prior to the bid opening.**
11. Contractors who download bid packages **SHALL EMAIL** cthuskins@ncdot.gov a minimum of five (5) days prior to the bid opening to inform NCDOT of your possession of a bid package. BIDS RECEIVED FROM CONTRACTORS WHO HAVE NOT PROVIDED NOTICE OF POSSESSION OF A BID PACKAGE MAY BE REJECTED.
12. **THE PROPOSAL WITH THE ITEMIZED PROPOSAL SHEET ATTACHED SHALL BE PLACED IN A SEALED ENVELOPE AND SHALL BE DELIVERED TO AND RECEIVED IN THE NCDOT DIVISION 7 OFFICE, LOCATED AT 1584 YANCEYVILLE STREET, GREENSBORO, NC 27405 BY 2:00 P.M. ON, THURSDAY OCTOBER 6, 2016.**
13. The sealed bid must display the following statement on the front of the sealed envelope:

QUOTATION FOR D7POC182
TO BE OPENED AT 2:00 P.M. ON, THURSDAY OCTOBER 6, 2016.
CONTRACTOR'S NAME

14. **.**If delivered by mail, the sealed envelope shall be placed in another sealed envelope and the outer envelope shall be addressed as follows:

N. C. Department Of Transportation
Attn: Carolyn T. Huskins
P. O. Box 14996
Greensboro, NC 27415

PROJECT SPECIAL PROVISIONS

GENERAL

This contract is for construction of a concrete pad for a 7000 gallon emulsion tank located at the maintenance camp in Alamance County**.** State Forces will be doing the preparation work**.** The Contractor shall furnish all material, services, labor, and equipment necessary for the required work. Sufficient experienced personnel shall be provided.

All materials and workmanship shall be in accordance with the following: The Project Special Provisions, Project Standard Provisions, most current Standard Special Provisions, *Manual of Uniform Traffic Control Devices (MUTCD)*, Provisions contained in the applicable Sections of the North Carolina Department of Transportation's *Standard Specifications for Roads and Structures* and Drawings contained in the applicable sections of the North Carolina Department of Transportation's *Roadway Standard Drawings* shall apply.

The published volume entitled *North Carolina Department of Transportation, Raleigh, Standard Specifications for Roads and Structures,* with all amendments and supplements thereto, is by reference incorporated into and made a part of this contract; that, except as herein modified, all the construction and work included in the contract is to be done in accordance with the specifications contained in said volume, and amendments and supplements thereto, under the direction of the Engineer.

The Contractor shall keep himself fully informed of all Federal, State, and local laws, ordinances, and regulations, and shall comply with the provisions of Section 107 of the *Standard Specifications*.

DIVISION LET CONTRACT PREQUALIFICATION:

(07-01-14)(6-1-15) SPD 01-410

Any firm that wishes to bid as a prime contractor shall be prequalified as a Bidder or PO Prime Contractor prior to submitting a bid. Information regarding prequalification can be found at: https://connect.ncdot.gov/business/Prequal/Pages/default.aspx.

In addition, the prime contractor and/or subcontractor(s) shall be prequalified in the work code(s) for which they identify as work items in the prime contractor's construction progress schedule that they will complete themselves. Any contractor identified as working outside their expertise may be considered in default of contract.

BOND REQUIREMENTS – No Bonds Required

(06-01-16) SPD 01-420B

The provisions of Articles 102-10 and 103-7 of the 2012 Standard Specifications for Roads and Structures are waived for this project. No bonds required.

CONTRACT TIME AND LIQUIDATED DAMAGES:

(7-1-95) (Rev. 12-18-07) 108 SP1 G10 A

The date of availability for this contract is **October 24, 2016**.

The completion date for this contract is **November 7, 2016**.

NO MAJOR CONTRACT ITEMS:

(2-19-02) (Rev. 8-21-07) 104 SP1 G31

None of the items included in this contract will be major items.

NO SPECIALTY ITEMS:

(7-1-95) 108-6 SP1 G34

None of the items included in this contract will be specialty items (see Article 108-6 of the *2012 Standard Specifications*).

SCHEDULE OF ESTIMATED COMPLETION PROGRESS:

(7-15-08) (Rev. 5-17-16) 108-2 SP1 G58

The Contractor's attention is directed to the Standard Special Provision entitled *Availability of Funds Termination of Contracts* included elsewhere in this proposal. The Department of Transportation's schedule of estimated completion progress for this project as required by that Standard Special Provision is as follows:

Fiscal Year		**Progress (% of Dollar Value)**
2017	(7/01/16 - 6/30/17)	**100**% of Total Amount Bid

The Contractor shall also furnish his own progress schedule in accordance with Article 108-2 of the *2012 Standard Specifications*. Any acceleration of the progress as shown by the Contractor's progress schedule over the progress as shown above shall be subject to the approval of the Engineer.

MINORITY BUSINESS ENTERPRISE AND WOMEN BUSINESS ENTERPRISE (DIVISIONS):

(10-16-07)(Rev. 7-19-16) 102-15(J) SP1 G67

Description

The purpose of this Special Provision is to carry out the North Carolina Department of Transportation’s policy of ensuring nondiscrimination in the award and administration of contracts financed in whole or in part with State funds.

Definitions

Additional MBE/WBE Subcontractors - Any MBE/WBE submitted at the time of bid that will not be used to meet either the MBE or WBE goal. No submittal of a Letter of Intent is required.

Committed MBE/WBE Subcontractor - Any MBE/WBE submitted at the time of bid that is being used to meet either the MBE or WBE goal by submission of a Letter of Intent. Or any MBE or WBE used as a replacement for a previously committed MBE or WBE firm.

Contract Goals Requirement - The approved MBE and WBE participation at time of award, but not greater than the advertised contract goals for each.
Goal Confirmation Letter - Written documentation from the Department to the bidder confirming the Contractor's approved, committed MBE and WBE participation along with a listing of the committed MBE and WBE firms.

Manufacturer - A firm that operates or maintains a factory or establishment that produces on the premises, the materials or supplies obtained by the Contractor.

MBE Goal - A portion of the total contract, expressed as a percentage, that is to be performed by committed MBE subcontractor(s).

Minority Business Enterprise (MBE) - A firm certified as a Disadvantaged Minority-Owned Business Enterprise through the North Carolina Unified Certification Program.

Regular Dealer - A firm that owns, operates, or maintains a store, warehouse, or other establishment in which the materials or supplies required for the performance of the contract are bought, kept in stock, and regularly sold to the public in the usual course of business. A regular dealer engages in, as its principal business and in its own name, the purchase and sale or lease of the products in question. A regular dealer in such bulk items as steel, cement, gravel, stone, and petroleum products need not keep such products in stock, if it owns and operates distribution equipment for the products. Brokers and packagers are not regarded as manufacturers or regular dealers within the meaning of this section.

North Carolina Unified Certification Program (NCUCP) - A program that provides comprehensive services and information to applicants for MBE/WBE certification. The MBE/WBE program follows the same regulations as the federal Disadvantaged Business Enterprise (DBE) program in accordance with 49 CFR Part 26.

United States Department of Transportation (USDOT) - Federal agency responsible for issuing regulations (49 CFR Part 26) and official guidance for the DBE program.

WBE Goal - A portion of the total contract, expressed as a percentage, that is to be performed by committed WBE subcontractor(s).

Women Business Enterprise (WBE) - A firm certified as a Disadvantaged Women-Owned Business Enterprise through the North Carolina Unified Certification Program.

Forms and Websites Referenced in this Provision

Payment Tracking System - On-line system in which the Contractor enters the payments made to MBE and WBE subcontractors who have performed work on the project. https://apps.dot.state.nc.us/Vendor/PaymentTracking/

DBE-IS *Subcontractor Payment Information* - Form for reporting the payments made to all MBE/WBE firms working on the project. This form is for paper bid projects only. http://www.ncdot.org/doh/forms/files/DBE-IS.xls

RF-1 *MBE/WBE Replacement Request Form* - Form for replacing a committed MBE or WBE. http://connect.ncdot.gov/projects/construction/Construction%20Forms/DBE%20MBE%20WBE%20Replacement%20Request%20Form.pdf

SAF *Subcontract Approval Form* - Form required for approval to sublet the contract. http://connect.ncdot.gov/projects/construction/Construction%20Forms/Subcontract%20Approval%20Form%20Rev.%202012.zip

JC-1 *Joint Check Notification Form* - Form and procedures for joint check notification. The form acts as a written joint check agreement among the parties providing full and prompt disclosure of the expected use of joint checks. http://connect.ncdot.gov/projects/construction/Construction%20Forms/Joint%20Check%20Notification%20Form.pdf

Letter of Intent - Form signed by the Contractor and the MBE/WBE subcontractor, manufacturer or regular dealer that affirms that a portion of said contract is going to be performed by the signed MBE/WBE for the amount listed at the time of bid. http://connect.ncdot.gov/letting/LetCentral/Letter%20of%20Intent%20to%20Perform%20as%20a%20Subcontractor.pdf

Listing of MBE and WBE Subcontractors Form - Form for entering MBE/WBE subcontractors on a project that will meet this MBE and WBE goals. This form is for paper bids only. http://connect.ncdot.gov/municipalities/Bid%20Proposals%20for%20LGA%20Content/09%20MBE-WBE%20Subcontractors%20(State).docx
Subcontractor Quote Comparison Sheet - Spreadsheet for showing all subcontractor quotes in the work areas where MBEs and WBEs quoted on the project. This sheet is submitted with good faith effort packages. http://connect.ncdot.gov/business/SmallBusiness/Documents/DBE%20Subcontractor%20Quote%20Comparison%20Example.xls

MBE and WBE Goal

The following goals for participation by Minority Business Enterprises and Women Business Enterprises are established for this contract:

(A) Minority Business Enterprises **0.0%**

(1) *If the MBE goal is more than zero*, the Contractor shall exercise all necessary and reasonable steps to ensure that MBEs participate in at least the percent of the contract as set forth above as the MBE goal.

(2) *If the MBE goal is zero*, the Contractor shall make an effort to recruit and use MBEs during the performance of the contract. Any MBE participation obtained shall be reported to the Department.

(B) Women Business Enterprises **0.0 %**

(1) *If the WBE goal is more than zero*, the Contractor shall exercise all necessary and reasonable steps to ensure that WBEs participate in at least the percent of the contract as set forth above as the WBE goal.

(2) *If the WBE goal is zero*, the Contractor shall make an effort to recruit and use WBEs during the performance of the contract. Any WBE participation obtained shall be reported to the Department.

Directory of Transportation Firms (Directory)

Real-time information is available about firms doing business with the Department and firms that are certified through NCUCP in the Directory of Transportation Firms. Only firms identified in the Directory as MBE and WBE certified shall be used to meet the MBE and WBE goals respectively. The Directory can be found at the following link. https://partner.ncdot.gov/VendorDirectory/default.html

The listing of an individual firm in the directory shall not be construed as an endorsement of the firm's capability to perform certain work.

Listing of MBE/WBE Subcontractors

At the time of bid, bidders shall submit <u>all</u> MBE and WBE participation that they anticipate to use during the life of the contract. Only those identified to meet the MBE goal and the WBE goal will be considered committed, even though the listing shall include both committed MBE/WBE subcontractors and additional MBE/WBE subcontractors. Any additional MBE/WBE subcontractor participation submitted at the time of bid will be used toward overall race-neutral goals. Only those firms with current MBE and WBE certification at the time of bid opening will be acceptable for listing in the bidder's submittal of MBE and WBE participation. The Contractor shall indicate the following required information:

(A) *If either the MBE or WBE goal is more than zero,*

(1) Bidders, at the time the bid proposal is submitted, shall submit a listing of MBE/WBE participation, including the names and addresses on *Listing of MBE*

and WBE Subcontractors contained elsewhere in the contract documents in order for the bid to be considered responsive. Bidders shall indicate the total dollar value of the MBE and WBE participation for the contract.

(2) If bidders have no MBE or WBE participation, they shall indicate this on the *Listing of MBE and WBE Subcontractors* by entering the word "None" or the number "0." This form shall be completed in its entirety. **Blank forms will not be deemed to represent zero participation.** Bids submitted that do not have MBE and WBE participation indicated on the appropriate form will not be read publicly during the opening of bids. The Department will not consider these bids for award and the proposal will be rejected.

(3) The bidder shall be responsible for ensuring that the MBE/WBE is certified at the time of bid by checking the Directory of Transportation Firms. If the firm is not certified at the time of the bid-letting, that MBE's or WBE's participation will not count towards achieving the corresponding goal.

(B) *If either the MBE or WBE goal is zero,* entries on the *Listing of MBE and WBE Subcontractors* are not required for the zero goal, however any MBE or WBE participation that is achieved during the project shall be reported in accordance with requirements contained elsewhere in the special provision.

MBE or WBE Prime Contractor

When a certified MBE or WBE firm bids on a contract that contains MBE and WBE goals, the firm is responsible for meeting the goals or making good faith efforts to meet the goals, just like any other bidder. In most cases, a MBE or WBE bidder on a contract will meet one of the goals by virtue of the work it performs on the contract with its own forces. However, all the work that is performed by the MBE or WBE bidder and any other similarly certified subcontractors will count toward the goal. The MBE or WBE bidder shall list itself along with any MBE or WBE subcontractors, if any, in order to receive credit toward the goals.

For example, on a proposed contract, the WBE goal is 10%, and the MBE goal is 8%. A WBE bidder puts in a bid where they will perform 40% of the contract work and have a WBE subcontractor which will perform another 5% of the work. Together the two WBE firms submit on the *Listing of MBE and WBE Subcontractors* a value of 45% of the contract which fulfills the WBE goal. The 8% MBE goal shall be obtained through MBE participation with MBE certified subcontractors or documented through a good faith effort. It should be noted that you cannot combine the two goals to meet an overall value. The two goals shall remain separate.

MBE/WBE prime contractors shall also follow Sections A or B listed under *Listing of MBE/WBE Subcontractors* just as a non-MBE/WBE bidder would.

Written Documentation – Letter of Intent

The bidder shall submit written documentation for each MBE/WBE that will be used to meet the MBE and WBE goals of the contract, indicating the bidder's commitment to use the MBE/WBE in the contract. This documentation shall be submitted on the Department's form titled *Letter of Intent*.

The documentation shall be received in the office of the Engineer no later than 12:00 noon of the sixth calendar day following opening of bids, unless the sixth day falls on Saturday, Sunday or an official state holiday. In that situation, it is due in the office of the Engineer no later than 12:00 noon on the next official state business day.

If the bidder fails to submit the Letter of Intent from each committed MBE and WBE to be used toward the MBE and WBE goals, or if the form is incomplete (i.e. both signatures are not present), the MBE/WBE participation will not count toward meeting the MBE/WBE goal. If the lack of this participation drops the commitment below either the MBE or WBE goal, the Contractor shall submit evidence of good faith efforts for the goal not met, completed in its entirety, to the Engineer no later than 12:00 noon of the eighth calendar day following opening of bids, unless the eighth day falls on Saturday, Sunday or an official state holiday. In that situation, it is due in the office of the Engineer no later than 12:00 noon on the next official state business day.

Submission of Good Faith Effort

If the bidder fails to meet or exceed either the MBE or the WBE goal, the apparent lowest responsive bidder shall submit to the Department documentation of adequate good faith efforts made to reach that specific goal(s).

One complete set and **6** copies of this information shall be received in the office of the Engineer no later than 12:00 noon of the sixth calendar day following opening of bids, unless the sixth day falls on Saturday, Sunday or an official state holiday. In that situation, it is due in the office of the Engineer no later than 12:00 noon on the next official state business day.

Note: Where the information submitted includes repetitious solicitation letters, it will be acceptable to submit a representative letter along with a distribution list of the firms that were solicited. Documentation of MBE/WBE quotations shall be a part of the good faith effort submittal. This documentation may include written subcontractor quotations, telephone log notations of verbal quotations, or other types of quotation documentation.

Consideration of Good Faith Effort for Projects with MBE/WBE Goals More Than Zero

Adequate good faith efforts mean that the bidder took all necessary and reasonable steps to achieve the goal which, by their scope, intensity, and appropriateness, could reasonably be expected to obtain sufficient MBE/WBE participation. Adequate good faith efforts also mean that the bidder actively and aggressively sought MBE/WBE participation. Mere *pro forma* efforts are not considered good faith efforts.

The Department will consider the quality, quantity, and intensity of the different kinds of efforts a bidder has made. Listed below are examples of the types of actions a bidder will take in making a good faith effort to meet the goals and are not intended to be exclusive or exhaustive, nor is it intended to be a mandatory checklist.

(A) Soliciting through all reasonable and available means (e.g. attendance at pre-bid meetings, advertising, written notices, use of verifiable electronic means through the use of the NCDOT Directory of Transportation Firms) the interest of all certified MBEs/WBEsthat are also prequalified subcontractors. The bidder must solicit this interest within at least 10 days prior to bid opening to allow the MBEs/WBEs to respond to the solicitation. Solicitation shall provide the opportunity to MBEs/WBEs within the Division and surrounding Divisions where the project is located. The bidder must determine with certainty if the MBEs/WBEs are interested by taking appropriate steps to follow up initial solicitations.

(B) Selecting portions of the work to be performed by MBEs/WBEs in order to increase the likelihood that the MBE and WBE goals will be achieved.

(1) Where appropriate, break out contract work items into economically feasible units to facilitate MBE/WBE participation, even when the prime contractor might otherwise prefer to perform these work items with its own forces.

(2) Negotiate with subcontractors to assume part of the responsibility to meet the contract MBE/WBE goals when the work to be sublet includes potential for MBE/WBE participation (2nd and 3rd tier subcontractors).

(C) Providing interested certified MBEs/WBEs that are also prequalified subcontractors with adequate information about the plans, specifications, and requirements of the contract in a timely manner to assist them in responding to a solicitation.

(D) (1) Negotiating in good faith with interested MBEs/WBEs. It is the bidder's responsibility to make a portion of the work available to MBE/WBE subcontractors and suppliers and to select those portions of the work or material needs consistent with the available MBE/WBE subcontractors and suppliers, so as to facilitate MBE/WBE participation. Evidence of such negotiation includes the names, addresses, and telephone numbers of MBEs/WBEs that were considered; a description of the information provided regarding the plans and specifications for the work selected for subcontracting; and evidence as to why additional agreements could not be reached for MBEs/WBEs to perform the work.

(2) A bidder using good business judgment would consider a number of factors in negotiating with subcontractors, including MBE/WBE subcontractors, and would take a firm's price and capabilities as well as contract goals into consideration. However, the fact that there may be some additional costs involved in finding and using MBEs/WBEs is not in itself sufficient reason for a bidder's failure to meet the contract MBE or WBE goals, as long as such costs

are reasonable. Also, the ability or desire of a prime contractor to perform the work of a contract with its own organization does not relieve the bidder of the responsibility to make good faith efforts. Bidding contractors are not, however, required to accept higher quotes from MBEs/WBEs if the price difference is excessive or unreasonable.

(E) Not rejecting MBEs/WBEs as being unqualified without sound reasons based on a thorough investigation of their capabilities. The bidder's standing within its industry, membership in specific groups, organizations, or associates and political or social affiliations (for example, union vs. non-union employee status) are not legitimate causes for the rejection or non-solicitation of bids in the bidder's efforts to meet the project goal.

(F) Making efforts to assist interested MBEs/WBEs in obtaining bonding, lines of credit, or insurance as required by the recipient or bidder.

(G) Making efforts to assist interested MBEs/WBEs in obtaining necessary equipment, supplies, materials, or related assistance or services.

(H) Effectively using the services of available minority/women community organizations; minority/women contractors' groups; Federal, State, and local minority/women business assistance offices; and other organizations as allowed on a case-by-case basis to provide assistance in the recruitment and placement of MBEs/WBEs. Contact within 7 days from the bid opening NCDOT's Business Development Manager in the Business Opportunity and Work Force Development Unit to give notification of the bidder's inability to get MBE or WBE quotes.

(I) Any other evidence that the bidder submits which shows that the bidder has made reasonable good faith efforts to meet the MBE and WBE goal.

In addition, the Department may take into account the following:

(1) Whether the bidder's documentation reflects a clear and realistic plan for achieving the MBE and WBE goals.

(2) The bidders' past performance in meeting the MBE and WBE goals.

(3) The performance of other bidders in meeting the MBE and WBE goals. For example, when the apparent successful bidder fails to meet the goals, but others meet it, you may reasonably raise the question of whether, with additional reasonable efforts the apparent successful bidder could have met the goals. If the apparent successful bidder fails to meet the MBE and WBE goals, but meets or exceeds the average MBE and WBE participation obtained by other bidders, the Department may view this, in conjunction with other factors, as evidence of the apparent successful bidder having made a good faith effort.

If the Department does not award the contract to the apparent lowest responsive bidder, the Department reserves the right to award the contract to the next lowest responsive bidder that can satisfy to the Department that the MBE and WBE goals can be met or that an adequate good faith effort has been made to meet the MBE and WBE goals.

Non-Good Faith Appeal

The Engineer will notify the contractor verbally and in writing of non-good faith. A contractor may appeal a determination of non-good faith made by the Goal Compliance Committee. If a contractor wishes to appeal the determination made by the Committee, they shall provide written notification to the Engineer. The appeal shall be made within 2 business days of notification of the determination of non-good faith.

Counting MBE/WBE Participation Toward Meeting MBE/WBE Goals

(A) Participation

The total dollar value of the participation by a committed MBE/WBE will be counted toward the contract goal requirements. The total dollar value of participation by a committed MBE/WBE will be based upon the value of work actually performed by the MBE/WBE and the actual payments to MBE/WBE firms by the Contractor.

(B) Joint Checks

Prior notification of joint check use shall be required when counting MBE/WBE participation for services or purchases that involves the use of a joint check. Notification shall be through submission of Form JC-1 *(Joint Check Notification Form)* and the use of joint checks shall be in accordance with the Department's Joint Check Procedures.

(C) Subcontracts (Non-Trucking)

A MBE/WBE may enter into subcontracts. Work that a MBE subcontracts to another MBE firm may be counted toward the MBE contract goal requirement. The same holds for work that a WBE subcontracts to another WBE firm. Work that a MBE subcontracts to a non-MBE firm does <u>not</u> count toward the MBE contract goal requirement. Again, the same holds true for the work that a WBE subcontracts to a non-WBE firm. If a MBE or WBE contractor or subcontractor subcontracts a significantly greater portion of the work of the contract than would be expected on the basis of standard industry practices, it shall be presumed that the MBE or WBE is not performing a commercially useful function. The MBE/WBE may present evidence to rebut this presumption to the Department. The Department's decision on the rebuttal of this presumption may be subject to review by the Office of Inspector General, NCDOT.

(D) Joint Venture

When a MBE or WBE performs as a participant in a joint venture, the Contractor may count toward its contract goal requirement a portion of the total value of participation with the MBE or WBE in the joint venture, that portion of the total dollar value being a distinct clearly defined portion of work that the MBE or WBE performs with its forces.

(E) Suppliers

A contractor may count toward its MBE or WBE requirement 60 percent of its expenditures for materials and supplies required to complete the contract and obtained from a MBE or WBE regular dealer and 100 percent of such expenditures from a MBE or WBE manufacturer.

(F) Manufacturers and Regular Dealers

A contractor may count toward its MBE or WBE requirement the following expenditures to MBE/WBE firms that are not manufacturers or regular dealers:

(1) The fees or commissions charged by a MBE/WBE firm for providing a *bona fide* service, such as professional, technical, consultant, or managerial services, or for providing bonds or insurance specifically required for the performance of a DOT-assisted contract, provided the fees or commissions are determined to be reasonable and not excessive as compared with fees and commissions customarily allowed for similar services.

(2) With respect to materials or supplies purchased from a MBE/WBE, which is neither a manufacturer nor a regular dealer, count the entire amount of fees or commissions charged for assistance in the procurement of the materials and supplies, or fees or transportation charges for the delivery of materials or supplies required on a job site (but not the cost of the materials and supplies themselves), provided the fees are determined to be reasonable and not excessive as compared with fees customarily allowed for similar services.

Commercially Useful Function

(A) MBE/WBE Utilization

The Contractor may count toward its contract goal requirement only expenditures to MBEs and WBEs that perform a commercially useful function in the work of a contract. A MBE/WBE performs a commercially useful function when it is responsible for execution of the work of the contract and is carrying out its responsibilities by actually performing, managing, and supervising the work involved. To perform a commercially useful function, the MBE/WBE shall also be responsible with respect to materials and supplies used on the contract, for negotiating price, determining quality and quantity, ordering the material and installing (where applicable) and paying for the material itself. To determine whether a MBE/WBE is performing a commercially useful function, the Department will evaluate the amount of work subcontracted, industry practices, whether the amount the firm is to be paid under the contract is commensurate with the work it is actually performing and the MBE/WBE credit claimed for its performance of the work, and any other relevant factors.

(B) MBE/WBE Utilization in Trucking

The following factors will be used to determine if a MBE or WBE trucking firm is performing a commercially useful function:

(1) The MBE/WBE shall be responsible for the management and supervision of the entire trucking operation for which it is responsible on a particular contract, and there shall not be a contrived arrangement for the purpose of meeting the MBE or WBE goal.

(2) The MBE/WBE shall itself own and operate at least one fully licensed, insured, and operational truck used on the contract.

(3) The MBE/WBE receives credit for the total value of the transportation services it provides on the contract using trucks it owns, insures, and operates using drivers it employs.

(4) The MBE may subcontract the work to another MBE firm, including an owner-operator who is certified as a MBE. The same holds true that a WBE may subcontract the work to another WBE firm, including an owner-operator who is certified as a WBE. When this occurs, the MBE or WBE who subcontracts work receives credit for the total value of the transportation services the subcontracted MBE or WBE provides on the contract. It should be noted that every effort shall be made by MBE and WBE contractors to subcontract to the same certification (i.e., MBEs to MBEs and WBEs to WBEs), in order to fulfill the goal requirement. This, however, may not always be possible due to the limitation of firms in the area. If the MBE or WBE firm shows a good faith effort has been made to reach out to similarly certified transportation service providers and there is no interest or availability, and they can get assistance from other certified providers, the Engineer will not hold the prime liable for meeting the goal.

(5) The MBE/WBE may also subcontract the work to a non-MBE/WBE firm, including from an owner-operator. The MBE/WBE who subcontracts the work to a non-MBE/WBE is entitled to credit for the total value of transportation services provided by the non-MBE/WBE subcontractor not to exceed the value of transportation services provided by MBE/WBE-owned trucks on the contract. Additional participation by non-MBE/WBE subcontractors receives credit only for the fee or commission it receives as a result of the subcontract arrangement. The value of services performed under subcontract agreements between the MBE/WBE and the Contractor will not count towards the MBE/WBE contract requirement.

(6) A MBE/WBE may lease truck(s) from an established equipment leasing business open to the general public. The lease must indicate that the MBE/WBE has exclusive use of and control over the truck. This requirement does not preclude

the leased truck from working for others during the term of the lease with the consent of the MBE/WBE, so long as the lease gives the MBE/WBE absolute priority for use of the leased truck. This type of lease may count toward the MBE/WBE's credit as long as the driver is under the MBE/WBE's payroll.

(7) Subcontracted/leased trucks shall display clearly on the dashboard the name of the MBE/WBE that they are subcontracted/leased to and their own company name if it is not identified on the truck itself. Magnetic door signs are not permitted.

MBE/WBE Replacement

When a Contractor has relied on a commitment to a MBE or WBE firm (or an approved substitute MBE or WBE firm) to meet all or part of a contract goal requirement, the contractor shall not terminate the MBE/WBE for convenience. This includes, but is not limited to, instances in which the Contractor seeks to perform the work of the terminated subcontractor with another MBE/WBE subcontractor, a non-MBE/WBE subcontractor, or with the Contractor's own forces or those of an affiliate. A MBE/WBE may only be terminated after receiving the Engineer's written approval based upon a finding of good cause for the termination. The prime contractor must give the MBE/WBE firm five (5) calendar days to respond to the prime contractor's notice of termination and advise the prime contractor and the Department of the reasons, if any, why the firm objects to the proposed termination of its subcontract and why the Department should not approve the action.

All requests for replacement of a committed MBE/WBE firm shall be submitted to the Engineer for approval on Form RF-1 *(Replacement Request).* If the Contractor fails to follow this procedure, the Contractor may be disqualified from further bidding for a period of up to 6 months.

The Contractor shall comply with the following for replacement of a committed MBE/WBE:

(A) Performance Related Replacement

When a committed MBE is terminated for good cause as stated above, an additional MBE that was submitted at the time of bid may be used to fulfill the MBE commitment. The same holds true if a committed WBE is terminated for good cause, an additional WBE that was submitted at the time of bid may be used to fulfill the WBE goal. A good faith effort will only be required for removing a committed MBE/WBE if there were no additional MBEs/WBEs submitted at the time of bid to cover the same amount of work as the MBE/WBE that was terminated.

If a replacement MBE/WBE is not found that can perform at least the same amount of work as the terminated MBE/WBE, the Contractor shall submit a good faith effort documenting the steps taken. Such documentation shall include, but not be limited to, the following:

(1) Copies of written notification to MBEs/WBEs that their interest is solicited in contracting the work defaulted by the previous MBE/WBE or in subcontracting other items of work in the contract.

(2) Efforts to negotiate with MBEs/WBEs for specific subbids including, at a minimum:
   (a) The names, addresses, and telephone numbers of MBEs/WBEs who were contacted.
   (b) A description of the information provided to MBEs/WBEs regarding the plans and specifications for portions of the work to be performed.

(3) A list of reasons why MBE/WBE quotes were not accepted.

(4) Efforts made to assist the MBEs/WBEs contacted, if needed, in obtaining bonding or insurance required by the Contractor.

(B) Decertification Replacement

(1) When a committed MBE/WBE is decertified by the Department after the SAF (*Subcontract Approval Form*) has been received by the Department, the Department will not require the Contractor to solicit replacement MBE/WBE participation equal to the remaining work to be performed by the decertified firm. The participation equal to the remaining work performed by the decertified firm will count toward the contract goal requirement.

(2) When a committed MBE/WBE is decertified prior to the Department receiving the SAF (*Subcontract Approval Form*) for the named MBE/WBE firm, the Contractor shall take all necessary and reasonable steps to replace the MBE/WBE subcontractor with another similarly certified MBE/WBE subcontractor to perform at least the same amount of work to meet the MBE/WBE goal requirement. If a MBE/WBE firm is not found to do the same amount of work, a good faith effort must be submitted to NCDOT (see A herein for required documentation).

Changes in the Work

When the Engineer makes changes that result in the reduction or elimination of work to be performed by a committed MBE/WBE, the Contractor will not be required to seek additional participation. When the Engineer makes changes that result in additional work to be performed by a MBE/WBE based upon the Contractor's commitment, the MBE/WBE shall participate in additional work to the same extent as the MBE/WBE participated in the original contract work.

When the Engineer makes changes that result in extra work, which has more than a minimal impact on the contract amount, the Contractor shall seek additional participation by MBEs/WBEs unless otherwise approved by the Engineer.

When the Engineer makes changes that result in an alteration of plans or details of construction, and a portion or all of the work had been expected to be performed by a committed MBE/WBE, the Contractor shall seek participation by MBEs/WBEs unless otherwise approved by the Engineer.

When the Contractor requests changes in the work that result in the reduction or elimination of work that the Contractor committed to be performed by a MBE/WBE, the Contractor shall seek additional participation by MBEs/WBEs equal to the reduced MBE/WBE participation caused by the changes.

Reports and Documentation

A SAF (*Subcontract Approval Form*) shall be submitted for all work which is to be performed by a MBE/WBE subcontractor. The Department reserves the right to require copies of actual subcontract agreements involving MBE/WBE subcontractors.

When using transportation services to meet the contract commitment, the Contractor shall submit a proposed trucking plan in addition to the SAF. The plan shall be submitted prior to beginning construction on the project. The plan shall include the names of all trucking firms proposed for use, their certification type(s), the number of trucks owned by the firm, as well as the individual truck identification numbers, and the line item(s) being performed.

Within 30 calendar days of entering into an agreement with a MBE/WBE for materials, supplies or services, not otherwise documented by the SAF as specified above, the Contractor shall furnish the Engineer a copy of the agreement. The documentation shall also indicate the percentage (60% or 100%) of expenditures claimed for MBE/WBE credit.

Reporting Minority and Women Business Enterprise Participation

The Contractor shall provide the Engineer with an accounting of payments made to all MBE and WBE firms, including material suppliers and contractors at all levels (prime, subcontractor, or second tier subcontractor). This accounting shall be furnished to the Engineer for any given month by the end of the following month. Failure to submit this information accordingly may result in the following action:

(A) Withholding of money due in the next partial pay estimate; or

(B) Removal of an approved contractor from the prequalified bidders' list or the removal of other entities from the approved subcontractors list.

While each contractor (prime, subcontractor, 2nd tier subcontractor) is responsible for accurate accounting of payments to MBEs/WBEs, it shall be the prime contractor's responsibility to report all monthly and final payment information in the correct reporting manner.

Failure on the part of the Contractor to submit the required information in the time frame specified may result in the disqualification of that contractor and any affiliate companies from further bidding until the required information is submitted.

Failure on the part of any subcontractor to submit the required information in the time frame specified may result in the disqualification of that contractor and any affiliate companies from being approved for further work on future projects until the required information is submitted. Contractors reporting transportation services provided by non-MBE/WBE lessees shall evaluate the value of services provided during the month of the reporting period only.

At any time, the Engineer can request written verification of subcontractor payments.

The Contractor shall report the accounting of payments through the Department's DBE Payment Tracking System.

Failure to Meet Contract Requirements

Failure to meet contract requirements in accordance with Subarticle 102-15(J) of the *2012 Standard Specifications* may be cause to disqualify the Contractor.

SUBSURFACE INFORMATION:
(7-1-95) 450 SP1 G112 B

Subsurface information is available on the roadway portion of this project only.

SUBSURFACE INFORMATION:
(7-1-95) 450 SP1 G112 C

Subsurface information is available on the structure portion of this project only.

LOCATING EXISTING UNDERGROUND UTILITIES:
(3-20-12) 105 SP1 G115

Revise the *2012 Standard Specifications* as follows:

Page 1-43, Article 105-8, line 28, after the first sentence, add the following:

Identify excavation locations by means of pre-marking with white paint, flags, or stakes or provide a specific written description of the location in the locate request.

RESOURCE CONSERVATION AND ENV. SUSTAINABLE PRACTICES:
(5-21-13) (Rev. 5-19-15) 104-13 SP1 G118

In accordance with North Carolina Executive Order 156, NCGS 130A-309.14(3), and NCGS 136-28.8, it is the objective of the Department to aid in the reduction of materials that become a part of our solid waste stream, to divert materials from landfills, to find ways to recycle and reuse materials, to consider and minimize, where economically feasible, the environmental impacts associated with agency land use and acquisition, construction, maintenance and facility management for the benefit of the Citizens of North Carolina.

To achieve the mission of reducing environmental impacts across the state, the Department is committed to supporting the efforts to initiate, develop and use products and construction methods that incorporate the use of recycled, solid waste products and environmentally sustainable practices in accordance with Article 104-13 of the *Standard Specifications*.

Report the quantities of reused or recycled materials either incorporated in the project or diverted from landfills and any practice that minimizes the environmental impact on the project annually on the Project Construction Reuse and Recycling Reporting Form. The Project Construction Reuse and Recycling Reporting Form and a location tool for local recycling facilities are available at:
http://connect.ncdot.gov/resources/Environmental/Pages/North-Carolina-Recycling-Locations.aspx.

Submit the Project Construction Reuse and Recycling Reporting Form by August 1 annually to valuemanagementunit@ncdot.gov. For questions regarding the form or reporting, please contact the State Value Management Engineer at 919-707-4810.

DOMESTIC STEEL:
(4-16-13) 106 SP1 G120

Revise the *2012 Standard Specifications* as follows:

P**age 1-49, Subarticle 106-1(B) Domestic Steel, lines 2-7,** replace the first paragraph with the following:

All steel and iron products that are permanently incorporated into this project shall be produced in the United States except minimal amounts of foreign steel and iron products may be used provided the combined material cost of the items involved does not exceed 0.1% of the total amount bid for the entire project or $2,500, whichever is greater. If invoices showing the cost of the material are not provided, the amount of the bid item involving the foreign material will be used for calculations. This minimal amount of foreign produced steel and iron products permitted for use is not applicable to high strength fasteners. Domestically produced high strength fasteners are required.

OUTSOURCING OUTSIDE THE USA:
(9-21-04) (Rev. 5-16-06) SP1 G150

All work on consultant contracts, services contracts, and construction contracts shall be performed in the United States of America. No work shall be outsourced outside of the United States of America.

Outsourcing for the purpose of this provision is defined as the practice of subcontracting labor, work, services, staffing, or personnel to entities located outside of the United States.
The North Carolina Secretary of Transportation shall approve exceptions to this provision in writing.

IRAN DIVESTMENT ACT:
(5-17-16) SP01 G151

As a result of the Iran Divestment Act of 2015 (Act), Article 6E, N.C. General Statute § 147-86.55, the State Treasurer published the Final Divestment List (List) which includes the Final Divestment List-Iran, and the Parent and Subsidiary Guidance-Iran. These lists identify companies and persons engaged in investment activities in Iran and will be updated every 180 days. The List can be found at https://www.nctreasurer.com/inside-the-department/OpenGovernment/Pages/Iran-Divestment-Act-Resources.aspx

By submitting the Offer, the Contractor certifies that, as of the date of this bid, it is not on the then-current List created by the State Treasurer. The Contractor must notify the Department immediately if, at any time before the award of the contract, it is added to the List.

As an ongoing obligation, the Contractor must notify the Department immediately if, at any time during the contract term, it is added to the List. Consistent with § 147-86.59, the Contractor shall not contract with any person to perform a part of the work if, at the time the subcontract is signed, that person is on the then-current List.

During the term of the Contract, should the Department receive information that a person is in violation of the Act as stated above, the Department will offer the person an opportunity to respond and the Department will take action as appropriate and provided for by law, rule, or contract.

GIFTS FROM VENDORS AND CONTRACTORS:
(12-15-09) 107-1 SP1 G152

By Executive Order 24, issued by Governor Perdue, and *N.C.G.S.§ 133-32,* it is unlawful for any vendor or contractor (i.e. architect, bidder, contractor, construction manager, design professional, engineer, landlord, offeror, seller, subcontractor, supplier, or vendor), to make gifts or to give favors to any State employee of the Governor's Cabinet Agencies (i.e. Administration, Commerce, Correction, Crime Control and Public Safety, Cultural Resources, Environment and Natural Resources, Health and Human Services, Juvenile Justice and Delinquency Prevention, Revenue, Transportation, and the Office of the Governor). This prohibition covers those vendors and contractors who:

(A) Have a contract with a governmental agency; or
(B) Have performed under such a contract within the past year; or
(C) Anticipate bidding on such a contract in the future.

For additional information regarding the specific requirements and exemptions, vendors and contractors are encouraged to review Executive Order 24 and *N.C.G.S. § 133-32*.

Executive Order 24 also encouraged and invited other State Agencies to implement the requirements and prohibitions of the Executive Order to their agencies. Vendors and contractors should contact other State Agencies to determine if those agencies have adopted Executive Order 24.

LIABILITY INSURANCE:
(5-20-14) SP1 G160

Revise the *2012 Standard Specifications* as follows:

Page 1-60, Article 107-15 LIABILITY INSURANCE, line 16, add the following as the second sentence of the third paragraph:

Prior to beginning services, all contractors shall provide proof of coverage issued by a workers' compensation insurance carrier, or a certificate of compliance issued by the Department of Insurance for self-insured subcontractors, irrespective of whether having regularly in service fewer than three employees.

STATE HIGHWAY ADMINISTRATOR TITLE CHANGE:
(9-18-12) SP1 G185

Revise the *2012 Standard Specifications* as follows:

Replace all references to "State Highway Administrator" with "Chief Engineer".

SUBLETTING OF CONTRACT:
(11-18-2014) 108-6 SP1 G186

Revise the *2012 Standard Specifications* as follows:

Page 1-66, Article 108-6 Subletting of Contract, line 37, add the following as the second sentence of the first paragraph:

All requests to sublet work shall be submitted within 30 days of the date of availability or prior to expiration of 20% of the contract time, whichever date is later, unless otherwise approved by the Engineer.

Page 1-67, Article 108-6 Subletting of Contract, line 7, add the following as the second sentence of the fourth paragraph:

Purchasing materials for subcontractors is not included in the percentage of work required to be performed by the Contractor. If the Contractor sublets items of work but elects to purchase material for the subcontractor, the value of the material purchased will be included in the total dollar amount considered to have been sublet.

PROJECT SPECIAL PROVISIONS

CONCRETE PAD:

All work shall be in accordance with Section 825 of the Standard Specifications and the following: A lump sum payment will be made for the pay item of "Labor and Equipment".

Measurement and Payment

Payment for Labor and Equipment will be paid in Lump Sum; project shall be completed in two weeks.

Labor	**Lump Sum**
Equipment	**Lump Sum**

MATERIALS:

(2-21-12) (Rev. 3-15-16) 1000, 1002, 1005, 1016, 1018, 1024, 1050, 1074, 1078, 1080, 1081, 1086, 1084, 1087, 1092 SP10 R01

Revise the *2012 Standard Specifications* as follows:

Page 10-1, Article 1000-1, DESCRIPTION, lines 9-10, replace the last sentence of the first paragraph with the following:

Type IL, IP, IS or IT blended cement may be used instead of Portland cement.

Page 10-1, Article 1000-1, DESCRIPTION, line 14, add the following:

If any change is made to the mix design, submit a new mix design (with the exception of an approved pozzolan source change).

If any major change is made to the mix design, also submit new test results showing the mix design conforms to the criteria. Define a major change to the mix design as:

(1) A source change in coarse aggregate, fine aggregate or cement.

(2) A pozzolan class or type change (e.g. Class F fly ash to Class C fly ash).

(3) A quantitative change in coarse aggregate (applies to an increase or decrease greater than 5%), fine aggregate (applies to an increase or decrease greater than 5%), water (applies to an increase only), cement (applies to a decrease only), or pozzolan (applies to an increase or decrease greater than 5%).

Use materials which do not produce a mottled appearance through rusting or other staining of the finished concrete surface.

Page 10-1, Article 1000-2, MATERIALS, line 16; Page 10-8, Subarticle 1000-7(A), Materials, line 8; and Page 10-18, Article 1002-2, MATERIALS, line 9, add the following to the table of item references:

Item	**Section**
Type IL Blended Cement	1024-1

Page 10-1, Subarticle 1000-3(A), Composition and Design, lines 25-27, replace the second paragraph with the following:

Fly ash may be substituted for cement in the mix design up to 30% at a rate of 1.0 lb of fly ash to each pound of cement replaced.

Page 10-2, Subarticle 1000-3(A), Composition and Design, lines 12-21, delete the third paragraph through the sixth paragraph beginning with "If any change is made to the mix design, submit…" through "…(applies to a decrease only)."

Page 10-5, Table 1000-1, REQUIREMENTS FOR CONCRETE, replace with the following:

TABLE 1000-1
REQUIREMENTS FOR CONCRETE

Class of Concrete	Min. Comp. Strength at 28 days	Maximum Water-Cement Ratio				Consistency Max. Slump		Cement Content			
		Air-Entrained Concrete		Non Air-Entrained Concrete		Vibrated	Non-Vibrated	Vibrated		Non- Vibrated	
		Rounded Aggregate	Angular Aggre-gate	Rounded Aggregate	Angular Aggre-gate			Min.	Max.	Min.	Max.
Units	*psi*					*inch*	*inch*	*lb/cy*	*lb/cy*	*lb/cy*	*lb/cy*
AA	4,500	0.381	0.426	-	-	3.5	-	639	715	-	-
AA Slip Form	4,500	0.381	0.426	-	-	1.5	-	639	715	-	-
Drilled Pier	4,500	-	-	0.450	0.450	-	5-7 dry 7-9 wet	-	-	640	800
A	3,000	0.488	0.532	0.550	0.594	3.5	4	564	-	602	-
B	2,500	0.488	0.567	0.559	0.630	1.5 machine-placed 2.5 hand-placed	4	508	-	545	-
Sand Light-weight	4,500	-	0.420	-	-	4	-	715	-	-	-
Latex Modified	3,000 7 day	0.400	0.400	-	-	6	-	658	-	-	-
Flowable Fill excavatable	150 max. at 56 days	as needed	as needed	as needed	as needed	-	Flow-able	-	-	40	100
Flowable Fill non-excavatable	125	as needed	as needed	as needed	as needed	-	Flow-able	-	-	100	as needed
Pavement	4,500 design, field 650 flexural, design only	0.559	0.559	-	-	1.5 slip form 3.0 hand place	-	526	-	-	-
Precast	See Table 1077-1	as needed	as needed	-	-	6	as needed	as needed	as needed	as needed	as needed
Prestress	per contract	See Table 1078-1	See Table 1078-1	-	-	8	-	564	as needed	-	-

Page 10-6, Subarticle 1000-4(I), Use of Fly Ash, lines 36-2, replace the first paragraph with the following:

Fly ash may be substituted for cement in the mix design up to 30% at a rate of 1.0 lb of fly ash to each pound of cement replaced. Use Table 1000-1 to determine the maximum allowable water-cementitious material (cement + fly ash) ratio for the classes of concrete listed.

Page 10-7, Table 1000-3, MAXIMUM WATER-CEMENTITIOUS MATERIAL RATIO, delete the table.

Page 10-7, Article 1000-5, HIGH EARLY STRENGTH PORTLAND CEMENT CONCRETE, lines 30-31, delete the second sentence of the third paragraph.

Page 10-19, Article 1002-3, SHOTCRETE FOR TEMPORARY SUPPORT OF EXCAVATIONS, line 30, add the following at the end of Section 1002:

(H) Handling and Storing Test Panels

Notify the Area Materials Engineer when preconstruction or production test panels are made within 24 hours of shooting the panels. Field cure and protect test panels from damage in accordance with ASTM C1140 until the Department transports panels to the Materials and Tests Regional Laboratory for coring.

Page 10-23, Table 1005-1, AGGREGATE GRADATION-COARSE AGGREGATE, replace with the following:

TABLE 1005-1
AGGREGATE GRADATION - COARSE AGGREGATE

Std. Size #	2"	1 1/2"	1"	3/4"	1/2"	3/8"	#4	#8	#10	#16	#40	#200	Remarks
	Percentage of Total by Weight Passing												
4	100	90-100	20-55	0-15	-	0-5	-	-	-	-	-	**A**	Asphalt Plant Mix
467M	100	95-100	-	35-70	-	0-30	0-5	-	-	-	-	**A**	Asphalt Plant Mix
5	-	100	90-100	20-55	0-10	0-5	-	-	-	-	-	**A**	AST, Sediment Control Stone
57	-	100	95-100	-	25-60	-	0-10	0-5	-	-	-	**A**	AST, Str. Concrete, Shoulder Drain, Sediment Control Stone
57M	-	100	95-100	-	25-45	-	0-10	0-5	-	-	-	**A**	AST, Concrete Pavement
6M	-	-	100	90-100	20-55	0-20	0-8	-	-	-	-	**A**	AST
67	-	-	100	90-100	-	20-55	0-10	0-5	-	-	-	**A**	AST, Str. Concrete, Asphalt Plant Mix
78M	-	-	-	100	98-100	75-100	20-45	0-15	-	-	-	**A**	Asphalt Plant Mix, AST, Str. Conc, Weep Hole Drains
14M	-	-	-	-	-	100	35-70	5-20	-	0-8	-	**A**	Asphalt Plant Mix, AST, Weep Hole Drains, Str. Concrete
9	-	-	-	-	-	100	85-100	10-40	-	0-10	-	**A**	AST
ABC	-	100	75-97	-	55-80	-	35-55	-	25-45	-	14-30	4-12[B]	Aggregate Base Course, Aggregate Stabilization
ABC (M)	-	100	75-100	-	45-79	-	20-40	-	0-25	-	-	0-12[B]	Maintenance Stabilization
Light-weight[C]	-	-	-	-	100	80-100	5-40	0-20	-	0-10	-	0-2.5	AST

A. See Subarticle 1005-4(A).
B. See Subarticle 1005-4(B).
C. For Lightweight Aggregate used in Structural Concrete, see Subarticle 1014-2(E)(6).

Page 10-39, Article 1016-3, CLASSIFICATIONS , lines 27-32, replace with the following:

Select material is clean, unweathered durable, blasted rock material obtained from an approved source. While no specific gradation is required, the below criteria will be used to evaluate the materials for visual acceptance by the Engineer:

(A) At least 50% of the rock has a diameter of from 1.5 ft to 3 ft,

(B) 30% of the rock ranges in size from 2" to 1.5 ft in diameter, and

(C) Not more than 20% of the rock is less than 2" in diameter. No rippable rock will be permitted.

Page 10-40, Tables 1018-1 and 1018-2, PIEDMONT, WESTERN AND COASTAL AREA CRITERIA FOR ACCEPTANCE OF BORROW MATERIAL, under second column in both tables, replace second row with the following:

Acceptable, but not to be used in the top 3 ft of embankment or backfill

Page 10-46, Article 1024-1, PORTLAND CEMENT, line 33, add the following as the ninth paragraph:

Use Type IL blended cement that meets AASHTO M 240, except that the limestone content is limited to between 5 and 12% by weight and the constituents shall be interground. Class F fly ash can replace a portion of Type IL blended cement and shall be replaced as outlined in Subarticle 1000-4(I) for Portland cement. For mixes that contain cement with alkali content between 0.6% and 1.0% and for mixes that contain a reactive aggregate documented by the Department, use a pozzolan in the amount shown in Table 1024-1.

Page 10-46, Table 1024-1, POZZOLANS FOR USE IN PORTLAND CEMENT CONCRETE, replace with the following:

TABLE 1024-1 POZZOLANS FOR USE IN PORTLAND CEMENT CONCRETE	
Pozzolan	**Rate**
Class F Fly Ash	20% - 30% by weight of required cement content with 1.0 lb Class F fly ash per lb of cement replaced
Ground Granulated Blast Furnace Slag	35%-50% by weight of required cement content with 1.0 lb slag per lb of cement replaced
Microsilica	4%-8% by weight of required cement content with 1.0 lb microsilica per lb of cement replaced

Page 10-47, Subarticle 1024-3(B), Approved Sources, lines 16-18, replace the second sentence of the second paragraph with the following:

Tests shall be performed by AASHTO's designated National Transportation Product Evaluation Program (NTPEP) laboratory for concrete admixture testing.

Page 10-65, Article 1050-1, GENERAL, line 41, replace the first sentence with the following:

All fencing material and accessories shall meet Section 106.

Page 10-115, Subarticle 1074-7(B), Gray Iron Castings, lines 10-11, replace the first two sentences with the following:

Supply gray iron castings meeting all facets of AASHTO M 306 excluding proof load. Proof load testing will only be required for new casting designs during the design process, and conformance to M306 loading (40,000 lb.) will be required only when noted on the design documents.

Page 10-126, Table 1078-1, REQUIREMENTS FOR CONCRETE, replace with the following:

TABLE 1078-1
REQUIREMENTS FOR CONCRETE

Property	**28 Day Design Compressive Strength 6,000 psi or less**	**28 Day Design Compressive Strength greater than 6,000 psi**
Maximum Water/Cementitious Material Ratio	0.45	0.40
Maximum Slump without HRWR	3.5"	3.5"
Maximum Slump with HRWR	8"	8"
Air Content (upon discharge into forms)	5 + 2%	5 + 2%

Page 10-151, Article 1080-4, INSPECTION AND SAMPLING, lines 18-22, replace (B), (C) and (D) with the following:

(B) At least 3 panels prepared as specified in 5.5.10 of AASHTO M 300, Bullet Hole Immersion Test.

(C) At least 3 panels of 4"x6"x1/4" for the Elcometer Adhesion Pull Off Test, ASTM D4541.

(D) A certified test report from an approved independent testing laboratory for the Salt Fog Resistance Test, Cyclic Weathering Resistance Test, and Bullet Hole Immersion Test as specified in AASHTO M 300.

(E) A certified test report from an approved independent testing laboratory that the product has been tested for slip coefficient and meets AASHTO M253, Class B.

Page 10-161, Subarticle 1081-1(A), Classifications, lines 29-33, delete first 3 sentences of the description for Type 2 and replace with the following:

Type 2 - A low-modulus, general-purpose adhesive used in epoxy mortar repairs. It may be used to patch spalled, cracked or broken concrete where vibration, shock or expansion and contraction are expected.

Page 10-162, Subarticle 1081-1(A), Classifications, lines 4-7, delete the second and third sentences of the description for Type 3A. **Lines 16-22,** delete Types 6A, 6B and 6C.

Page 10-162, Subarticle 1081-1(B), Requirements, lines 26-30, replace the second paragraph with the following:

For epoxy resin systems used for embedding dowel bars, threaded rods, rebar, anchor bolts and other fixtures in hardened concrete, the manufacturer shall submit test results showing that the bonding system will obtain 125% of the specified required yield strength of the fixture. Furnish certification that, for the particular bolt grade, diameter and embedment depth required, the anchor system will not fail by adhesive failure and that there is no movement of the anchor bolt. For certification and anchorage, use 3,000 psi as the minimum Portland cement concrete compressive strength used in this test. Use adhesives that meet Section 1081.

List the properties of the adhesive on the container and include density, minimum and maximum temperature application, setting time, shelf life, pot life, shear strength and compressive strength.

Page 10-163, Table 1081-1, PROPERTIES OF MIXED EPOXY RESIN SYSTEMS, replace with the following:

TABLE 1081-1
PROPERTIES OF MIXED EPOXY RESIN SYSTEMS

Property	Type 1	Type 2	Type 3	Type 3A	Type 4A	Type 4B	Type 5
Viscosity-Poises at 77°F ± 2°F	Gel	10-30	25-75	Gel	40-150	40-150	1-6
Spindle No.	-	3	4	--	4	4	2
Speed (RPM)	-	20	20	--	10	10	50
Pot Life (Minutes)	20-50	30-60	20-50	5-50	40-80	40-80	20-60
Minimum Tensile Strength at 7 days (psi)	1,500	2,000	4,000	4,000	1,500	1,500	4,000
Tensile Elongation at 7 days (%)	30 min.	30 min.	2-5	2-5	5-15	5-15	2-5
Min. Compressive Strength of 2". mortar cubes at 24 hours	3,000 (Neat)	4,000-	6,000-	6,000 (Neat)	3,000	3,000	6,000
Min. Compressive Strength of 2" mortar cubes at 7 days	5,000 (Neat)	-	-	-	-	5,000	-
Maximum Water Absorption (%)	1.5	1.0	1.0	1.5	1.0	1.0	1.0
Min. Bond Strength Slant Shear Test at 14 days (psi)	1,500	1,500	2,000	2,000	1,500	1,500	1,500

Page 10-164, Subarticle 1081-1(E), Prequalification, lines 31-33, replace the second sentence of the first paragraph with the following:

Manufacturers choosing to supply material for Department jobs must submit an application through the Value Management Unit with the following information for each type and brand name:

Page 10-164, Subarticle 1081-1(E)(3), line 37, replace with the following:

(3) Type of the material in accordance with Articles 1081-1 and 1081-4,

Page 10-165, Subarticle 1081-1(E)(6), line 1, in the first sentence of the first paragraph replace "AASHTO M 237" with "the specifications".

Page 10-165, Subarticle 1081-1(E), Prequalification, line 9-10, delete the second sentence of the last paragraph.

Page 10-165, Subarticle 1081-1(F), Acceptance, line 14, in the first sentence of the first paragraph replace "Type 1" with "Type 3".

Page 10-169, Subarticle 1081-3(G), Anchor Bolt Adhesives, delete this subarticle.

Page 10-170, Article 1081-3, HOT BITUMEN, line 9, add the following at the end of Section 1081:

1081-4 EPOXY RESIN ADHESIVE FOR BONDING TRAFFIC MARKINGS

(A) General

This section covers epoxy resin adhesive for bonding traffic markers to pavement surfaces.

(B) Classification

The types of epoxies and their uses are as shown below:

Type I – Rapid Setting, High Viscosity, Epoxy Adhesive. This type of adhesive provides rapid adherence to traffic markers to the surface of pavement.

Type II – Standard Setting, High Viscosity, Epoxy Adhesive. This type of adhesive is recommended for adherence of traffic markers to pavement surfaces when rapid set is not required.

Type III – Rapid Setting, Low Viscosity, Water Resistant, Epoxy Adhesive. This type of rapid setting adhesive, due to its low viscosity, is appropriate only for use with embedded traffic markers.

Type IV – Standard Set Epoxy for Blade Deflecting-Type Plowable Markers.

(C) Requirements

Epoxies shall conform to the requirements set forth in AASHTO M 237.

(D) Prequalification

Refer to Subarticle 1081-1(E).

(E) Acceptance

Refer to Subarticle 1081-1(F).

Page 10-173, Article 1084-2, STEEL SHEET PILES, lines 37-38, replace first paragraph with the following:

Steel sheet piles detailed for permanent applications shall be hot rolled and meet ASTM A572 or ASTM A690 unless otherwise required by the plans. Steel sheet piles shall be coated as required

by the plans. Galvanized sheet piles shall be coated in accordance with Section 1076. Metallized sheet piles shall be metallized in accordance to the Project Special Provision "Thermal Sprayed Coatings (Metallization)" with an 8 mil, 99.9% aluminum alloy coating and a 0.5 mil seal coating. Any portion of the metallized sheet piling encased in concrete shall receive a barrier coat. The barrier coat shall be an approved waterborne coating with a low-viscosity which readily absorbs into the pores of the aluminum thermal sprayed coating. The waterborne coating shall be applied at a spreading rate that results in a theoretical 1.5 mil dry film thickness. The manufacturer shall issue a letter of certification that the resin chemistry of the waterborne coating is compatible with the 99.9% aluminum thermal sprayed alloy and suitable for tidal water applications.

Page 10-174, Subarticle 1086-1(B)(1), Epoxy, lines 18-24, replace with the following:

The epoxy shall meet Article 1081-4.

The 2 types of epoxy adhesive which may be used are Type I, Rapid Setting, and Type II, Standard Setting. Use Type II when the pavement temperature is above 60°F or per the manufacturer's recommendations whichever is more stringent. Use Type I when the pavement temperature is between 50°F and 60°F or per the manufacturer's recommendations whichever is more stringent. Epoxy adhesive Type I, Cold Set, may be used to attach temporary pavement markers to the pavement surface when the pavement temperature is between 32°F and 50°F or per the manufacturer's recommendations whichever is more stringent.

Page 10-175, Subarticle 1086-2(E), Epoxy Adhesives, line 27, replace "Section 1081" with "Article 1081-4".

Page 10-177, Subarticle 1086-3(E), Epoxy Adhesives, line 22, replace "Section 1081" with "Article 1081-4".

Page 10-179, Subarticle 1087-4(A), Composition, lines 39-41, replace the third paragraph with the following:

All intermixed and drop-on glass beads shall not contain more than 75 ppm arsenic or 200 ppm lead.

Page 10-180, Subarticle 1087-4(B), Physical Characteristics, line 8, replace the second paragraph with the following:

All intermixed and drop-on glass beads shall comply with NCGS § 136-30.2 and 23 USC § 109(r).

Page 10-181, Subarticle 1087-7(A), Intermixed and Drop-on Glass Beads, line 24, add the following after the first paragraph:

Use X-ray Fluorescence for the normal sampling procedure for intermixed and drop-on beads, without crushing, to check for any levels of arsenic and lead. If any arsenic or lead is detected, the sample shall be crushed and repeat the test using X-ray Fluorescence. If the X-ray Fluorescence test shows more than a LOD of 5 ppm, test the beads using United States Environmental Protection Agency Method 6010B, 6010C or 3052 for no more than 75 ppm arsenic or 200 ppm lead.

GROUT PRODUCTION AND DELIVERY:
(3-17-15) 1003 SP10 R20

Revise the *2012 Standard Specifications* as follows:

Replace Section 1003 with the following:

SECTION 1003
GROUT PRODUCTION AND DELIVERY

1003-1 DESCRIPTION

This section addresses cement grout to be used for structures, foundations, retaining walls, concrete barriers, embankments, pavements and other applications in accordance with the contract. Produce non-metallic grout composed of Portland cement and water and at the Contractor's option or as required, aggregate and pozzolans. Include chemical admixtures as required or needed. Provide sand cement or neat cement grout as required. Define "sand cement grout" as grout with only fine aggregate and "neat cement grout" as grout without aggregate.

The types of grout with their typical uses are as shown below:

Type 1 – A cement grout with only a 3-day strength requirement and a fluid consistency that is typically used for filling subsurface voids.

Type 2 – A nonshrink grout with strength, height change and flow conforming to ASTM C1107 that is typically used for foundations, ground anchors and soil nails.

Type 3 – A nonshrink grout with high early strength and freeze-thaw durability requirements that is typically used in pile blockouts, grout pockets, shear keys, dowel holes and recesses for concrete barriers and structures.

Type 4 – A neat cement grout with low strength, a fluid consistency and high fly ash content that is typically used for slab jacking.

Type 5 – A low slump, low mobility sand cement grout with minimal strength that is typically used for compaction grouting.

1003-2 MATERIALS

Refer to Division 10.

Item	Section
Chemical Admixtures	1024-3
Fine Aggregate	1014-1
Fly Ash	1024-5
Ground Granulated Blast Furnace Slag	1024-6
Portland Cement	1024-1

Silica Fume	1024-7
Water	1024-4

Do not use grout that contains soluble chlorides or more than 1% soluble sulfate. At the Contractor's option, use an approved packaged grout instead of the materials above except for water. Use packaged grouts that are on the NCDOT Approved Products List.

Use admixtures for grout that are on the NCDOT Approved Products List or other admixtures in accordance with Subarticle 1024-3(E) except do not use concrete additives or unclassified or other admixtures in Type 4 or 5 grout. Use Class F fly ash for Type 4 grout and Type II Portland cement for Type 5 grout.

Use well graded rounded aggregate with a gradation, liquid limit (LL) and plasticity index (PI) that meet Table 1003-1 for Type 5 grout. Fly ash may be substituted for a portion of the fines in the aggregate. Do not use any other pozzolans in Type 5 grout.

TABLE 1003-1
AGGREGATE REQUIREMENTS FOR TYPE 5 GROUT

Gradation		Maximum Liquid Limit	Maximum Plasticity Index
Sieve Designation per AASHTO M 92	**Percentage Passing (% by weight)**		
3/8"	100	N/A	N/A
No. 4	70 – 95		
No. 8	50 – 90		
No. 16	30 – 80		
No. 30	25 – 70		
No. 50	20 – 50		
No. 100	15 – 40		
No. 200	10 – 30	25	10

1003-3 COMPOSITION AND DESIGN

When using an approved packaged grout, a grout mix design submittal is not required. Otherwise, submit proposed grout mix designs for each grout mix to be used in the work. Mixes for all grout shall be designed by a Certified Concrete Mix Design Technician or an Engineer licensed by the State of North Carolina. Mix proportions shall be determined by a testing laboratory approved by the Department. Base grout mix designs on laboratory trial batches that meet Table 1003-2 and this section. With permission, the Contractor may use a quantity of chemical admixture within the range shown on the current list of approved admixtures maintained by the Materials and Tests Unit.

Submit grout mix designs in terms of saturated surface dry weights on Materials and Tests Form 312U at least 35 days before proposed use. Adjust batch proportions to compensate for surface moisture contained in the aggregates at the time of batching.

Changes in the saturated surface dry mix proportions will not be permitted unless revised grout mix designs have been submitted to the Engineer and approved.

Accompany Materials and Tests Form 312U with a listing of laboratory test results of compressive strength, density and flow or slump and if applicable, aggregate gradation, durability and height change. List the compressive strength of at least three 2" cubes at the age of 3 and 28 days.

The Engineer will review the grout mix design for compliance with the contract and notify the Contractor as to its acceptability. Do not use a grout mix until written notice has been received. Acceptance of the grout mix design or use of approved packaged grouts does not relieve the Contractor of his responsibility to furnish a product that meets the contract. Upon written request from the Contractor, a grout mix design accepted and used satisfactorily on any Department project may be accepted for use on other projects.

Perform laboratory tests in accordance with the following test procedures:

Property	**Test Method**
Aggregate Gradation[A]	AASHTO T 27
Compressive Strength	AASHTO T 106
Density (Unit Weight)	AASHTO T 121, AASHTO T 133[B], ANSI/API RP[C] 13B-1[B] (Section 4, Mud Balance)
Durability	AASHTO T 161[D]
Flow	ASTM C939 (Flow Cone)
Height Change	ASTM C1090[E]
Slump	AASHTO T 119

A. Applicable to grout with aggregate.
B. Applicable to Neat Cement Grout.
C. American National Standards Institute/American Petroleum Institute Recommended Practice.
D. Procedure A (Rapid Freezing and Thawing in Water) required.
E. Moist room storage required.

1003-4 GROUT REQUIREMENTS

Provide grout types in accordance with the contract. Use grouts with properties that meet Table 1003-2. The compressive strength of the grout will be considered the average compressive strength test results of three 2" cubes at each age. Make cubes that meet AASHTO T 106 from the grout delivered for the work or mixed on-site. Make cubes at such frequencies as the Engineer may determine and cure them in accordance with AASHTO T 106.

TABLE 1003-2 GROUT REQUIREMENTS					
Type of Grout	**Minimum Compressive Strength at**		**Height Change at 28 days**	**Flow[A]/Slump[B]**	**Minimum Durability Factor**
	3 days	**28 days**			
1	3,000 psi	–	–	10 – 30 sec	–
2	Table 1[C]			Fluid Consistency[C]	–
3	5,000 psi	–	0 – 0.2%	Per Accepted Grout Mix Design/ Approved Packaged Grout	80
4[D]	600 psi	1,500 psi	–	10 – 26 sec	–
5	–	500 psi	–	1 – 3"	–

A. Applicable to Type 1 through 4 grouts.
B. Applicable to Type 5 grout.
C. ASTM C1107.
D. Use Type 4 grout with proportions by volume of 1 part cement and 3 parts fly ash.

1003-5 TEMPERATURE REQUIREMENTS

When using an approved packaged grout, follow the manufacturer's instructions for grout and air temperature at the time of placement. Otherwise, the grout temperature at the time of placement shall be not less than 50°F nor more than 90°F. Do not place grout when the air temperature measured at the location of the grouting operation in the shade away from artificial heat is below 40°F.

1003-6 ELAPSED TIME FOR PLACING GROUT

Agitate grout continuously before placement. Regulate the delivery so the maximum interval between the placing of batches at the work site does not exceed 20 minutes. Place grout before exceeding the times in Table 1003-3. Measure the elapsed time as the time between adding the mixing water to the grout mix and placing the grout.

TABLE 1003-3 ELAPSED TIME FOR PLACING GROUT (with continuous agitation)		
Air or Grout Temperature, Whichever is Higher	**Maximum Elapsed Time**	
	No Retarding Admixture Used	**Retarding Admixture Used**
90°F or above	30 minutes	1 hr. 15 minutes
80°F through 89°F	45 minutes	1 hr. 30 minutes
79°F or below	60 minutes	1 hr. 45 minutes

1003-7 MIXING AND DELIVERY

Use grout free of any lumps and undispersed cement. When using an approved packaged grout, mix grout in accordance with the manufacturer's instructions. Otherwise, comply with Articles 1000-8 through 1000-12 to the extent applicable for grout instead of concrete.

STANDARD SPECIAL PROVISIONS

AVAILABILITY OF FUNDS – TERMINATION OF CONTRACTS

(5-20-08) Z-2

General Statute 143C-6-11. (h) Highway Appropriation is hereby incorporated verbatim in this contract as follows:

(h) Amounts Encumbered. – Transportation project appropriations may be encumbered in the amount of allotments made to the Department of Transportation by the Director for the estimated payments for transportation project contract work to be performed in the appropriation fiscal year. The allotments shall be multiyear allotments and shall be based on estimated revenues and shall be subject to the maximum contract authority contained in *General Statute 143C-6-11(c)*. Payment for transportation project work performed pursuant to contract in any fiscal year other than the current fiscal year is subject to appropriations by the General Assembly. Transportation project contracts shall contain a schedule of estimated completion progress, and any acceleration of this progress shall be subject to the approval of the Department of Transportation provided funds are available. The State reserves the right to terminate or suspend any transportation project contract, and any transportation project contract shall be so terminated or suspended if funds will not be available for payment of the work to be performed during that fiscal year pursuant to the contract. In the event of termination of any contract, the contractor shall be given a written notice of termination at least 60 days before completion of scheduled work for which funds are available. In the event of termination, the contractor shall be paid for the work already performed in accordance with the contract specifications.

Payment will be made on any contract terminated pursuant to the special provision in accordance with Subarticle 108-13(E) of the *2012 Standard Specifications*.

ERRATA

(1-17-12) (Rev. 04-21-15) Z-4

Revise the *2012 Standard Specifications* as follows:

Division 2

Page 2-7, line 31, Article 215-2 Construction Methods, replace "Article 107-26" with "Article 107-25".

Page 2-17, Article 226-3, Measurement and Payment, line 2, delete "pipe culverts,".

Page 2-20, Subarticle 230-4(B), Contractor Furnished Sources, change references as follows: Line 1, replace "(4) Buffer Zone" with "(c) Buffer Zone"; **Line 12,** replace "(5) Evaluation for Potential Wetlands and Endangered Species" with "(d) Evaluation for

Potential Wetlands and Endangered Species"; and **Line 33,** replace "(6) Approval" with "(4) Approval".

Division 3

Page 3-1, after line 15, Article 300-2 Materials, replace "1032-9(F)" with "1032-6(F)".

Division 4

Page 4-77, line 27, Subarticle 452-3(C) Concrete Coping, replace "sheet pile" with "reinforcement".

Division 6

Page 6-7, line 31, Article 609-3 Field Verification of Mixture and Job Mix Formula Adjustments, replace "30" with "45".

Page 6-10, line 42, Subarticle 609-6(C)(2), replace "Subarticle 609-6(E)" with "Subarticle 609-6(D)".

Page 6-11, Table 609-1 Control Limits, replace "Max. Spec. Limit" for the Target Source of $P_{0.075}/P_{be}$ Ratio with "1.0".

Page 6-40, Article 650-2 Materials, replace "Subarticle 1012-1(F)" with "Subarticle 1012-1(E)"

Division 7

Page 7-1, Article 700-3, CONCRETE HAULING EQUIPMENT, line 33, replace "competion" with "completion".

Division 8

Page 8-23, line 10, Article 838-2 Materials, replace "Portland Cement Concrete, Class B" with "Portland Cement Concrete, Class A".

Division 10

Page 10-166, Article 1081-3 Hot Bitumen, replace "Table 1081-16" with "Table 1081-2", replace "Table 1081-17" with "Table 1081-3", and replace "Table 1081-18" with "Table 1081-4".

Division 12

Page 12-7, Table 1205-3, add "FOR THERMOPLASTIC" to the end of the title.

Page 12-8, Subarticle 1205-5(B), line 13, replace "Table 1205-2" with "Table 1205-4".

Page 12-8, Table 1205-4 and 1205-5, replace "THERMOPLASTIC" in the title of these tables with "POLYUREA".

Page 12-9, Subarticle 1205-6(B), line 21, replace "Table 1205-4" with "Table 1205-6".

Page 12-11, Subarticle 1205-8(C), line 25, replace "Table 1205-5" with "Table 1205-7".

Division 15

Page 15-4, Subarticle 1505-3(F) Backfilling, line 26, replace "Subarticle 235-4(C)" with "Subarticle 235-3(C)".

Page 15-6, Subarticle 1510-3(B), after line 21, replace the allowable leakage formula with the following: $\mathbf{W=LD\sqrt{P} \div 148{,}000}$

Page 15-6, Subarticle 1510-3(B), line 32, delete "may be performed concurrently or" and replace with "shall be performed".
Page 15-17, Subarticle 1540-3(E), line 27, delete "Type 1".

Division 17

Page 17-26, line 42, Subarticle 1731-3(D) Termination and Splicing within Interconnect Center, delete this subarticle.

Revise the *2012 Roadway Standard Drawings* as follows:

1633.01 Sheet 1 of 1, English Standard Drawing for Matting Installation, replace "1633.01" with "1631.01".

PLANT AND PEST QUARANTINES
(Imported Fire Ant, Gypsy Moth, Witchweed, And Other Noxious Weeds)
(3-18-03) (Rev. 10-15-13) Z-04a

Within Quarantined Area

This project may be within a county regulated for plant and/or pests. If the project or any part of the Contractor's operations is located within a quarantined area, thoroughly clean all equipment prior to moving out of the quarantined area. Comply with federal/state regulations by obtaining a certificate or limited permit for any regulated article moving from the quarantined area.

Originating in a Quarantined County

Obtain a certificate or limited permit issued by the N.C. Department of Agriculture/United States Department of Agriculture. Have the certificate or limited permit accompany the article when it arrives at the project site.

Contact

Contact the N.C. Department of Agriculture/United States Department of Agriculture at 1-800-206-9333, 919-733-6932, or *http://www.ncagr.gov/plantind/* to determine those specific project sites located in the quarantined area or for any regulated article used on this project originating in a quarantined county.

Regulated Articles Include

1. Soil, sand, gravel, compost, peat, humus, muck, and decomposed manure, separately or with other articles. This includes movement of articles listed above that may be associated with cut/waste, ditch pulling, and shoulder cutting.
2. Plants with roots including grass sod.
3. Plant crowns and roots.
4. Bulbs, corms, rhizomes, and tubers of ornamental plants.
5. Hay, straw, fodder, and plant litter of any kind.
6. Clearing and grubbing debris.

7. Used agricultural cultivating and harvesting equipment.
8. Used earth-moving equipment.
9. Any other products, articles, or means of conveyance, of any character, if determined by an inspector to present a hazard of spreading imported fire ant, gypsy moth, witchweed or other noxious weeds.

MINIMUM WAGES

(7-21-09) Z-5

FEDERAL: The Fair Labor Standards Act provides that with certain exceptions every employer shall pay wages at the rate of not less than SEVEN DOLLARS AND TWENTY FIVE CENTS ($7.25) per hour.

STATE: The North Carolina Minimum Wage Act provides that every employer shall pay to each of his employees, wages at a rate of not less than SEVEN DOLLARS AND TWENTY FIVE CENTS ($7.25) per hour.

The minimum wage paid to all skilled labor employed on this contract shall be SEVEN DOLLARS AND TWENTY FIVE CENTS ($7.25) per hour.

The minimum wage paid to all intermediate labor employed on this contract shall be SEVEN DOLLARS AND TWENTY FIVE CENTS ($7.25) per hour.

The minimum wage paid to all unskilled labor on this contract shall be SEVEN DOLLARS AND TWENTY FIVE CENTS ($7.25) per hour.

This determination of the intent of the application of this act to the contract on this project is the responsibility of the Contractor.

The Contractor shall have no claim against the Department of Transportation for any changes in the minimum wage laws, Federal or State. It is the responsibility of the Contractor to keep fully informed of all Federal and State Laws affecting his contract.

AWARD OF CONTRACT

(6-28-77)(Rev 2/16/2016) Z-6

"The North Carolina Department of Transportation, in accordance with the provisions of *Title VI of the Civil Rights Act of 1964* (78 Stat. 252) and the Regulations of the Department of Transportation (*49 C.F.R., Part 21*), issued pursuant to such act, hereby notifies all bidders that it will affirmatively insure that the contract entered into pursuant to this advertisement will be awarded to the lowest responsible bidder without discrimination on the ground of race, color, or national origin".

TITLE VI AND NONDISCRIMINATION

I. Title VI Assurance

During the performance of this contract, the contractor, for itself, its assignees and successors in interest (hereinafter referred to as the "contractor") agrees as follows:

(1) Compliance with Regulations: The contractor shall comply with the Regulation relative to nondiscrimination in Federally-assisted programs of the Department of Transportation (hereinafter, "DOT") Title 49, Code of Federal Regulations, Part 21, as they may be amended from time to time, (hereinafter referred to as the Regulations), which are herein incorporated by reference and made a part of this contract.

(2) Nondiscrimination: The Contractor, with regard to the work performed by it during the contract, shall not discriminate on the grounds of race, color, or national origin in the selection and retention of subcontractors, including procurements of materials and leases of equipment. The contractor shall not participate either directly or indirectly in the discrimination prohibited by section 21.5 of the Regulations, including employment practices when the contract covers a program set forth in Appendix B of the Regulations.

(3) Solicitations for Subcontractors, Including Procurements of Materials and Equipment: In all solicitations either by competitive bidding or negotiation made by the contractor for work to be performed under a subcontract, including procurements of materials or leases of equipment, each potential subcontractor or supplier shall be notified by the contractor of the contractor's obligations under this contract and the Regulations relative to nondiscrimination on the grounds of race, color, or national origin.

(4) Information and Reports: The contractor shall provide all information and reports required by the Regulations or directives issued pursuant thereto, and shall permit access to its books, records, accounts, other sources of information, and its facilities as may be determined by the North Carolina Department of Transportation (NCDOT) or the Federal Highway Administration (FHWA) to be pertinent to ascertain compliance with such Regulations, orders and instructions. Where any information required of a contractor is in the exclusive possession of another who fails or refuses to furnish this information the contractor shall so certify to the NCDOT, or the FHWA as appropriate, and shall set forth what efforts it has made to obtain the information.

(5) Sanctions for Noncompliance: In the event of the contractor's noncompliance with the nondiscrimination provisions of this contract, the NCDOT shall impose such contract sanctions as it or the FHWA may determine to be appropriate, including, but not limited to:

(a) Withholding of payments to the contractor under the contract until the contractor complies, and/or

(b) Cancellation, termination or suspension of the contract, in whole or in part.

(6) Incorporation of Provisions: The contractor shall include the provisions of paragraphs (1) through (6) in every subcontract, including procurements of materials and leases of equipment, unless exempt by the Regulations, or directives issued pursuant thereto.

The contractor shall take such action with respect to any subcontractor procurement as the NCDOT or the FHWA may direct as a means of enforcing such provisions including sanctions for noncompliance: provided, however, that, in the event a contractor becomes involved in, or is threatened with, litigation with a subcontractor or supplier as a result of such direction, the contractor may request the NCDOT to enter into such litigation to protect the interests of the NCDOT, and, in addition, the contractor may request the United States to enter into such litigation to protect the interests of the United States.

II. <u>Title VI Nondiscrimination Program</u>

Title VI of the 1964 Civil Rights Act, 42 U.S.C. 2000d, provides that: “No person in the United States shall, on the grounds of race, color, or national origin, be excluded from participation in, be denied the benefits of, or be subjected to discrimination under any program or activity receiving Federal financial assistance.” The broader application of nondiscrimination law is

found in other statutes, executive orders, and regulations (see Section III, Pertinent Nondiscrimination Authorities), which provide additional protections based on age, sex, disability and religion. In addition, the 1987 Civil Rights Restoration Act extends nondiscrimination coverage to all programs and activities of federal-aid recipients and contractors, including those that are not federally-funded.

Nondiscrimination Assurance

The North Carolina Department of Transportation (NCDOT) hereby gives assurance that no person shall on the ground of race, color, national origin, sex, age, and disability, be excluded from participation in, be denied the benefits of, or be otherwise subjected to discrimination under any program or activity conducted by the recipient, as provided by Title VI of the Civil Rights Act of 1964, the Civil Rights Restoration Act of 1987, and any other related Civil Rights authorities, whether those programs and activities are federally funded or not.

Obligation

During the performance of this contract, the Contractor and its subcontractors are responsible for complying with NCDOT's Title VI Program. The Contractor must ensure that NCDOT's Notice of Nondiscrimination is posted in conspicuous locations accessible to all employees and subcontractors on the jobsite, along with the Contractor's own Equal Employment Opportunity (EEO) Policy Statement. The Contractor shall physically incorporate this "**TITLE VI AND NONDISCRIMINATION**" language, in its entirety, into all its subcontracts <u>on federally-assisted and state-funded NCDOT-owned projects</u>, and ensure its inclusion by subcontractors into all subsequent lower tier subcontracts. The Contractor and its subcontractors shall also physically incorporate the **FHWA-1273**, in its entirety, into all subcontracts and subsequent lower tier subcontracts <u>on **Federal-aid highway** construction contracts only</u>. The Contractor is also responsible for making its subcontractors aware of NCDOT's Discrimination Complaints Process, as follows:

FILING OF COMPLAINTS

1. **Applicability –** These complaint procedures apply to the beneficiaries of the NCDOT's programs, activities, and services, including, but not limited to, members of the public, contractors, subcontractors, consultants, and other sub-recipients of federal and state funds.
2. **Eligibility –** Any person or class of persons who believes he/she has been subjected to discrimination or retaliation prohibited by any of the Civil Rights authorities, based upon race, color, sex, age, national origin, or disability, may file a written complaint with NCDOT's Civil Rights office. The law prohibits intimidation or retaliation of any sort. The complaint may be filed by the affected individual or a representative, and must be in writing.
3. **Time Limits and Filing Options –** A complaint must be filed no later than 180 calendar days after the following:
   - The date of the alleged act of discrimination; or
   - The date when the person(s) became aware of the alleged discrimination; or
   - Where there has been a continuing course of conduct, the date on which that conduct was discontinued or the latest instance of the conduct.

   Title VI and other discrimination complaints may be submitted to the following entities:

- **North Carolina Department of Transportation**, Office of Equal Opportunity & Workforce Services (EOWS), External Civil Rights Section, 1511 Mail Service Center, Raleigh, NC 27699-1511; 919-508-1808 or toll free 800-522-0453
- **US Department of Transportation**, Departmental Office of Civil Rights, External Civil Rights Programs Division, 1200 New Jersey Avenue, SE, Washington, DC 20590; 202-366-4070

  Federal Highway Administration, North Carolina Division Office, 310 New Bern Avenue, Suite 410, Raleigh, NC 27601, 919-747-7010

  Federal Highway Administration, Office of Civil Rights, 1200 New Jersey Avenue, SE, 8th Floor, E81-314, Washington, DC 20590, 202-366-0693 / 366-0752

  Federal Transit Administration, Office of Civil Rights, ATTN: Title VI Program Coordinator, East Bldg. 5th Floor – TCR, 1200 New Jersey Avenue, SE, Washington, DC 20590

  Federal Aviation Administration, Office of Civil Rights, 800 Independence Avenue, SW, Washington, DC 20591, 202-267-3258
- **US Department of Justice**, Special Litigation Section, Civil Rights Division, 950 Pennsylvania Avenue, NW, Washington, DC 20530, 202-514-6255 or toll free 877-218-5228

4. **Format for Complaints –** Complaints must be in **writing** and **signed** by the complainant(s) or a representative and include the complainant's name, address, and telephone number. Complaints received by fax or e-mail will be acknowledged and processed. Allegations received by telephone will be reduced to writing and provided to the complainant for confirmation or revision before processing. Complaints will be accepted in other languages including Braille.
5. **Discrimination Complaint Form –** Contact NCDOT EOWS at the phone number above to receive a full copy of the Discrimination Complaint Form and procedures.
6. **Complaint Basis –** Allegations must be based on issues involving race, color, national origin, sex, age, or disability. The term "basis" refers to the complainant's membership in a protected group category. Contact this office to receive a Discrimination Complaint Form.

Protected Categories	**Definition**	**Examples**	**Applicable Statutes and Regulations**	
			FHWA	**FTA**
Race	An individual belonging to one of the accepted racial groups; or the perception, based usually on physical characteristics that a person is a member of a racial group	Black/African American, Hispanic/Latino, Asian, American Indian/Alaska Native, Native Hawaiian/Pacific Islander, White	Title VI of the Civil Rights Act of 1964; 49 CFR Part 21; 23 CFR 200	Title VI of the Civil Rights Act of 1964; 49 CFR Part 21; Circular 4702.1B
Color	Color of skin, including shade of skin within a racial group	Black, White, brown, yellow, etc.		
National Origin	Place of birth. Citizenship is not a factor. Discrimination based on language or a person's accent is also covered.	Mexican, Cuban, Japanese, Vietnamese, Chinese		

Sex	Gender	Women and Men	1973 Federal-Aid Highway Act	Title IX of the Education Amendments of 1972
Age	Persons of any age	21 year old person	Age Discrimination Act of 1975	
Disability	Physical or mental impairment, permanent or temporary, or perceived.	Blind, alcoholic, para-amputee, epileptic, diabetic, arthritic	Section 504 of the Rehabilitation Act of 1973; Americans with Disabilities Act of 1990	

III. Pertinent Nondiscrimination Authorities

During the performance of this contract, the contractor, for itself, its assignees, and successors in interest agrees to comply with the following non-discrimination statutes and authorities, including, but not limited to:

- Title VI of the Civil Rights Act of 1964 (42 U.S.C. § 2000d *et seq*., 78 stat. 252), (prohibits discrimination on the basis of race, color, national origin); and 49 CFR Part 21.
- The Uniform Relocation Assistance and Real Property Acquisition Policies Act of 1970, (42 U.S.C. § 4601), (prohibits unfair treatment of persons displaced or whose property has been acquired because of Federal or Federal-aid programs and projects);
- Federal-Aid Highway Act of 1973, (23 U.S.C. § 324 *et seq*.), (prohibits discrimination on the basis of sex);
- Section 504 of the Rehabilitation Act of 1973, (29 U.S.C. § 794 *et seq*.), as amended, (prohibits discrimination on the basis of disability); and 49 CFR Part 27;
- The Age Discrimination Act of 1975, as amended, (42 U.S.C. § 6101 *et seq*.), (prohibits discrimination on the basis of age);
- Airport and Airway Improvement Act of 1982, (49 USC § 471, Section 47123), as amended, (prohibits discrimination based on race, creed, color, national origin, or sex);
- The Civil Rights Restoration Act of 1987, (PL 100-209), (Broadened the scope, coverage and applicability of Title VI of the Civil Rights Act of 1964, The Age Discrimination Act of 1975 and Section 504 of the Rehabilitation Act of 1973, by expanding the definition of the terms "programs or activities" to include all of the programs or activities of the Federal-aid recipients, sub-recipients and contractors, whether such programs or activities are Federally funded or not);
- Titles II and III of the Americans with Disabilities Act, which prohibit discrimination on the basis of disability in the operation of public entities, public and private transportation systems, places of public accommodation, and certain testing entities (42 U.S.C. §§ 12131 – 12189) as implemented by Department of Transportation regulations at 49 C.F.R. parts 37 and 38;
- The Federal Aviation Administration's Non-discrimination statute (49 U.S.C. § 47123) (prohibits discrimination on the basis of race, color, national origin, and sex);
- Executive Order 12898, Federal Actions to Address Environmental Justice in Minority Populations and Low-Income Populations, which ensures discrimination against minority populations by discouraging programs, policies, and activities with disproportionately high and adverse human health or environmental effects on minority and low-income populations;

- Executive Order 13166, Improving Access to Services for Persons with Limited English Proficiency, and resulting agency guidance, national origin discrimination includes discrimination because of limited English proficiency (LEP). To ensure compliance with Title VI, you must take reasonable steps to ensure that LEP persons have meaningful access to your programs (70 Fed. Reg. at 74087 to 74100);
- Title IX of the Education Amendments of 1972, as amended, which prohibits you from discriminating because of sex in education programs or activities (20 U.S.C. 1681 et seq).
- Title VII of the Civil Rights Act of 1964 (42 U.S.C. § 2000e *et seq.*, Pub. L. 88-352), (prohibits employment discrimination on the basis of race, color, religion, sex, or national origin);
- 49 CFR Part 26, regulation to ensure nondiscrimination in the award and administration of DOT-assisted contracts in the Department's highway, transit, and airport financial assistance programs, as regards the use of Disadvantaged Business Enterprises (DBEs);
- Form FHWA-1273, "Required Contract Provisions," a collection of contract provisions and proposal notices that are generally applicable to *all Federal-aid construction projects* and must be made a part of, and physically incorporated into, *all federally-assisted contracts*, as well as appropriate subcontracts and purchase orders, particularly Sections II (Nondiscrimination) and III (Nonsegregated Facilities).

ON-THE-JOB TRAINING

(10-16-07) (Rev. 4-21-15) Z-10

Description

The North Carolina Department of Transportation will administer a custom version of the Federal On-the-Job Training (OJT) Program, commonly referred to as the Alternate OJT Program. All contractors (existing and newcomers) will be automatically placed in the Alternate Program. Standard OJT requirements typically associated with individual projects will no longer be applied at the project level. Instead, these requirements will be applicable on an annual basis for each contractor administered by the OJT Program Manager.

On the Job Training shall meet the requirements of 23 CFR 230.107 (b), 23 USC – Section 140, this provision and the On-the-Job Training Program Manual.

The Alternate OJT Program will allow a contractor to train employees on Federal, State and privately funded projects located in North Carolina. However, priority shall be given to training employees on NCDOT Federal-Aid funded projects.

Minorities and Women

Developing, training and upgrading of minorities and women toward journeyman level status is a primary objective of this special training provision. Accordingly, the Contractor shall make every effort to enroll minority and women as trainees to the extent that such persons are available within a reasonable area of recruitment. This training commitment is not intended, and shall not be used, to discriminate against any applicant for training, whether a member of a minority group or not.

Assigning Training Goals

The Department, through the OJT Program Manager, will assign training goals for a calendar year based on the contractors' past three years' activity and the contractors' anticipated upcoming year's activity with the Department. At the beginning of each year, all contractors eligible will be contacted by the Department to determine the number of trainees that will be assigned for the upcoming calendar year. At that time the Contractor shall enter into an agreement with the Department to provide a self-imposed on-the-job training program for the calendar year. This agreement will include a specific number of annual training goals agreed to by both parties. The number of training assignments may range from 1 to 15 per contractor per calendar year. The Contractor shall sign an agreement to fulfill their annual goal for the year.\

Training Classifications

The Contractor shall provide on-the-job training aimed at developing full journeyman level workers in the construction craft/operator positions. Preference shall be given to providing training in the following skilled work classifications:

Equipment Operators	Office Engineers
Truck Drivers	Estimators
Carpenters	Iron / Reinforcing Steel Workers
Concrete Finishers	Mechanics
Pipe Layers	Welders

The Department has established common training classifications and their respective training requirements that may be used by the contractors. However, the classifications established are not all-inclusive. Where the training is oriented toward construction applications, training will be allowed in lower-level management positions such as office engineers and estimators. Contractors shall submit new classifications for specific job functions that their employees are performing. The Department will review and recommend for acceptance to FHWA the new classifications proposed by contractors, if applicable. New classifications shall meet the following requirements:

Proposed training classifications are reasonable and realistic based on the job skill classification needs, and

The number of training hours specified in the training classification is consistent with common practices and provides enough time for the trainee to obtain journeyman level status.

The Contractor may allow trainees to be trained by a subcontractor provided that the Contractor retains primary responsibility for meeting the training and this provision is made applicable to the subcontract. However, only the Contractor will receive credit towards the annual goal for the trainee.

Where feasible, 25 percent of apprentices or trainees in each occupation shall be in their first year of apprenticeship or training. The number of trainees shall be distributed among the work

classifications on the basis of the contractor's needs and the availability of journeymen in the various classifications within a reasonable area of recruitment.

No employee shall be employed as a trainee in any classification in which they have successfully completed a training course leading to journeyman level status or in which they have been employed as a journeyman.

Records and Reports

The Contractor shall maintain enrollment, monthly and completion reports documenting company compliance under these contract documents. These documents and any other information as requested shall be submitted to the OJT Program Manager.

Upon completion and graduation of the program, the Contractor shall provide each trainee with a certification Certificate showing the type and length of training satisfactorily completed.

Trainee Interviews

All trainees enrolled in the program will receive an initial and Trainee/Post graduate interview conducted by the OJT program staff.

Trainee Wages

Contractors shall compensate trainees on a graduating pay scale based upon a percentage of the prevailing minimum journeyman wages (Davis-Bacon Act). Minimum pay shall be as follows:

60 percent	of the journeyman wage for the first half of the training period
75 percent	of the journeyman wage for the third quarter of the training period
90 percent	of the journeyman wage for the last quarter of the training period

In no instance shall a trainee be paid less than the local minimum wage. The Contractor shall adhere to the minimum hourly wage rate that will satisfy both the NC Department of Labor (NCDOL) and the Department.

Achieving or Failing to Meet Training Goals

The Contractor will be credited for each trainee employed by him on the contract work who is currently enrolled or becomes enrolled in an approved program and who receives training for at least 50 percent of the specific program requirement. Trainees will be allowed to be transferred between projects if required by the Contractor's scheduled workload to meet training goals.

If a contractor fails to attain their training assignments for the calendar year, they may be taken off the NCDOT's Bidders List.

Measurement and Payment

No compensation will be made for providing required training in accordance with these contract documents.

NAME CHANGE FOR NCDENR
(1-19-16) Z-11

Description

Wherever in the 2012 Standard Specifications, Project Special Provisions, Standard Special Provisions, Permits or Plans that reference is made to "NCDENR" or "North Carolina Department of Environment and Natural Resources", replace with "NCDEQ" or "North Carolina Department of Environmental Quality" respectively, as the case may be.

COMPENSATION:

All work or items, other than those listed on the Bid Form contained in the Contract Proposal, necessary to complete this work will be considered incidental in nature and no further compensation will be made.

All invoices shall be original and submitted to Derek Dixon, County Maintenance Engineer for approval. **Statements of all subcontractor payments shall be included with invoices. These statements are to be submitted on the Subcontractor Payment Information Form (DBE-IS), they shall be original and in ink.**

Invoices should bear the words "Due Upon Receipt", the company name and address, the "from" and "to" periods" and the REMIT TO address. (Note: Please place the words REMIT TO above this address.)

All invoices and DBE-IS Forms are to be mailed to the County Maintenance Engineer's Office:

NCDOT
Attn: Derek Dixon, CME
PO Box 766
Graham, NC 27253

The Division Staff Maintenance Engineer will approve all invoices and DBE-IS for payment. Invoices not accompanied by a completed DBE-IS form will not be processed.
Payment will not be made until original invoices and DBE-IS forms are received. Faxed invoices will not be processed.

EXECUTION OF BID

NON-COLLUSION AFFIDAVIT, DEBARMENT CERTIFICATION AND GIFT BAN CERTIFICATION

CORPORATION

The person executing the bid, on behalf of the Bidder, being duly sworn, solemnly swears (or affirms) that neither he, nor any official, agent or employee of the bidder has entered into any agreement, participated in any collusion, or otherwise taken any action which is in restraint of free competitive bidding in connection with any bid or contract, that the bidder has not been convicted of violating *N.C.G.S. § 133-24* within the last three years, and that the Bidder intends to do the work with its own bonafide employees or subcontractors and is not bidding for the benefit of another contractor.

In addition, execution of this bid in the proper manner also constitutes the Bidder's certification of status under penalty of perjury under the laws of the United States in accordance with the Debarment Certification attached, provided that the Debarment Certification also includes any required statements concerning exceptions that are applicable.

N.C.G.S. § 133-32 and Executive Order 24 prohibit the offer to, or acceptance by, any State Employee of any gift from anyone with a contract with the State, or from any person seeking to do business with the State. By execution of any response in this procurement, you attest, for your entire organization and its employees or agents, that you are not aware that any such gift has been offered, accepted, or promised by any employees of your organization.

SIGNATURE OF CONTRACTOR

_____
Full name of Corporation

_____
Address as Prequalified

Attest _____ By _____

Secretary/Assistant Secretary
Select appropriate title

President/Vice President/Assistant Vice President
Select appropriate title

_____
Print or type Signer's name

_____
Print or type Signer's name

CORPORATE SEAL

AFFIDAVIT MUST BE NOTARIZED

Subscribed and sworn to before me this the

_____ day of _____ 20__.

NOTARY SEAL

_____
Signature of Notary Public

of _____County

State of _____

My Commission Expires:_____

EXECUTION OF BID
NON-COLLUSION AFFIDAVIT, DEBARMENT CERTIFICATION AND GIFT BAN CERTIFICATION

PARTNERSHIP

The person executing the bid, on behalf of the Bidder, being duly sworn, solemnly swears (or affirms) that neither he, nor any official, agent or employee of the bidder has entered into any agreement, participated in any collusion, or otherwise taken any action which is in restraint of free competitive bidding in connection with any bid or contract, that the bidder has not been convicted of violating *N.C.G.S. § 133-24* within the last three years, and that the Bidder intends to do the work with its own bonafide employees or subcontractors and is not bidding for the benefit of another contractor.

In addition, execution of this bid in the proper manner also constitutes the Bidder's certification of status under penalty of perjury under the laws of the United States in accordance with the Debarment Certification attached, provided that the Debarment Certification also includes any required statements concerning exceptions that are applicable.

N.C.G.S. § 133-32 and Executive Order 24 prohibit the offer to, or acceptance by, any State Employee of any gift from anyone with a contract with the State, or from any person seeking to do business with the State. By execution of any response in this procurement, you attest, for your entire organization and its employees or agents, that you are not aware that any such gift has been offered, accepted, or promised by any employees of your organization.

SIGNATURE OF CONTRACTOR

_____	By	_____
Signature of Witness		Signature of Partner
_____		_____
Print or type Signer's name		Print or type Signer's name

AFFIDAVIT MUST BE NOTARIZED

Subscribed and sworn to before me this the

_____ day of _____ 20__.

_____
Signature of Notary Public

of _____County

State of _____

My Commission Expires:_____

NOTARY SEAL

EXECUTION OF BID
NON-COLLUSION AFFIDAVIT, DEBARMENT CERTIFICATION AND GIFT BAN CERTIFICATION

LIMITED LIABILITY COMPANY

The person executing the bid, on behalf of the Bidder, being duly sworn, solemnly swears (or affirms) that neither he, nor any official, agent or employee of the bidder has entered into any agreement, participated in any collusion, or otherwise taken any action which is in restraint of free competitive bidding in connection with any bid or contract, that the bidder has not been convicted of violating *N.C.G.S. § 133-24* within the last three years, and that the Bidder intends to do the work with its own bonafide employees or subcontractors and is not bidding for the benefit of another contractor.

In addition, execution of this bid in the proper manner also constitutes the Bidder's certification of status under penalty of perjury under the laws of the United States in accordance with the Debarment Certification attached, provided that the Debarment Certification also includes any required statements concerning exceptions that are applicable.

N.C.G.S. § 133-32 and Executive Order 24 prohibit the offer to, or acceptance by, any State Employee of any gift from anyone with a contract with the State, or from any person seeking to do business with the State. By execution of any response in this procurement, you attest, for your entire organization and its employees or agents, that you are not aware that any such gift has been offered, accepted, or promised by any employees of your organization.

SIGNATURE OF CONTRACTOR

_____
Full Name of Firm

_____
Address as Prequalified

_____ Signature of Witness	_____ Signature of Member/Manager/Authorized Agent *Select appropriate title*
_____ Print or type Signer's name	_____ Print or type Signer's Name

AFFIDAVIT MUST BE NOTARIZED

Subscribed and sworn to before me this the

_____ day of _____ 20__.

_____
Signature of Notary Public

of _____County

State of _____

My Commission Expires:_____

NOTARY SEAL

EXECUTION OF BID
NON-COLLUSION AFFIDAVIT, DEBARMENT CERTIFICATION AND GIFT BAN CERTIFICATION

JOINT VENTURE (2) or (3)

The person executing the bid, on behalf of the Bidder, being duly sworn, solemnly swears (or affirms) that neither he, nor any official, agent or employee of the bidder has entered into any agreement, participated in any collusion, or otherwise taken any action which is in restraint of free competitive bidding in connection with any bid or contract, that the bidder has not been convicted of violating *N.C.G.S. § 133-24* within the last three years, and that the Bidder intends to do the work with its own bonafide employees or subcontractors and is not bidding for the benefit of another contractor.

In addition, execution of this bid in the proper manner also constitutes the Bidder's certification of status under penalty of perjury under the laws of the United States in accordance with the Debarment Certification attached, provided that the Debarment Certification also includes any required statements concerning exceptions that are applicable.

N.C.G.S. § 133-32 and Executive Order 24 prohibit the offer to, or acceptance by, any State Employee of any gift from anyone with a contract with the State, or from any person seeking to do business with the State. By execution of any response in this procurement, you attest, for your entire organization and its employees or agents, that you are not aware that any such gift has been offered, accepted, or promised by any employees of your organization.

SIGNATURE OF CONTRACTOR

Instructions: **2 Joint Venturers** Fill in lines (1), (2) and (3) and execute. **3 Joint Venturers** Fill in lines (1), (2), (3) and (4) and execute. On Line (1), fill in the name of the Joint Venture Company. On Line (2), fill in the name of one of the joint venturers and execute below in the appropriate manner. On Line (3), print or type the name of the other joint venturer and execute below in the appropriate manner. On Line (4), fill in the name of the third joint venturer, if applicable and execute below in the appropriate manner.

Signature of Witness or Attest	By	Signature of Contractor
Print or type Signer's name		Print or type Signer's name
If Corporation, affix Corporate Seal	and	
Signature of Witness or Attest	By	Signature of Contractor
Print or type Signer's name		Print or type Signer's name
If Corporation, affix Corporate Seal	and	
Signature of Witness or Attest	By	Signature of Contractor
Print or type Signer's name		Print or type Signer's name
If Corporation, affix Corporate Seal		

NOTARY SEAL
Affidavit must be notarized for Line (2)
Subscribed and sworn to before me this
_____day of_____ 20___
_____
Signature of Notary Public
of _____County
State of _____
My Commission Expires:_____

NOTARY SEAL
Affidavit must be notarized for Line (3)
Subscribed and sworn to before me this
_____day of _____ 20___
_____
Signature of Notary Public
of _____County
State of _____
My Commission Expires:_____

NOTARY SEAL
Affidavit must be notarized for Line (4)
Subscribed and sworn to before me this
____day of _____ 20_____
_____
Signature of Notary Public
of _____County
State of _____
My Commission Expires:_____

EXECUTION OF BID
NON-COLLUSION AFFIDAVIT, DEBARMENT CERTIFICATION AND GIFT BAN CERTIFICATION

INDIVIDUAL DOING BUSINESS UNDER A FIRM NAME

The person executing the bid, on behalf of the Bidder, being duly sworn, solemnly swears (or affirms) that neither he, nor any official, agent or employee of the bidder has entered into any agreement, participated in any collusion, or otherwise taken any action which is in restraint of free competitive bidding in connection with any bid or contract, that the bidder has not been convicted of violating *N.C.G.S. § 133-24* within the last three years, and that the Bidder intends to do the work with its own bonafide employees or subcontractors and is not bidding for the benefit of another contractor.

In addition, execution of this bid in the proper manner also constitutes the Bidder's certification of status under penalty of perjury under the laws of the United States in accordance with the Debarment Certification attached, provided that the Debarment Certification also includes any required statements concerning exceptions that are applicable.

N.C.G.S. § 133-32 and Executive Order 24 prohibit the offer to, or acceptance by, any State Employee of any gift from anyone with a contract with the State, or from any person seeking to do business with the State. By execution of any response in this procurement, you attest, for your entire organization and its employees or agents, that you are not aware that any such gift has been offered, accepted, or promised by any employees of your organization.

SIGNATURE OF CONTRACTOR

Name of Contractor _____
Individual name

Trading and doing business as _____
Full name of Firm

_____ _____
Signature of Witness Signature of Contractor, Individually

_____ _____
Print or type Signer's name Print or type Signer's name

AFFIDAVIT MUST BE NOTARIZED

Subscribed and sworn to before me this the

_____ day of _____ 20__.

NOTARY SEAL

_____
Signature of Notary Public

of _____County

State of _____

My Commission Expires:_____

EXECUTION OF BID
NON-COLLUSION AFFIDAVIT, DEBARMENT CERTIFICATION AND GIFT BAN CERTIFICATION

INDIVIDUAL DOING BUSINESS IN HIS OWN NAME

The person executing the bid, on behalf of the Bidder, being duly sworn, solemnly swears (or affirms) that neither he, nor any official, agent or employee of the bidder has entered into any agreement, participated in any collusion, or otherwise taken any action which is in restraint of free competitive bidding in connection with any bid or contract, that the bidder has not been convicted of violating *N.C.G.S. § 133-24* within the last three years, and that the Bidder intends to do the work with its own bonafide employees or subcontractors and is not bidding for the benefit of another contractor.

In addition, execution of this bid in the proper manner also constitutes the Bidder's certification of status under penalty of perjury under the laws of the United States in accordance with the Debarment Certification attached, provided that the Debarment Certification also includes any required statements concerning exceptions that are applicable.

N.C.G.S. § 133-32 and Executive Order 24 prohibit the offer to, or acceptance by, any State Employee of any gift from anyone with a contract with the State, or from any person seeking to do business with the State. By execution of any response in this procurement, you attest, for your entire organization and its employees or agents, that you are not aware that any such gift has been offered, accepted, or promised by any employees of your organization.

SIGNATURE OF CONTRACTOR

Name of Contractor _____
Print or type Individual name

_____
Address as Prequalified

_____
Signature of Contractor, Individually

_____
Print or type Signer's Name

_____
Signature of Witness

_____
Print or type Signer's name

AFFIDAVIT MUST BE NOTARIZED

Subscribed and sworn to before me this the

_____ day of _____ 20__.

NOTARY SEAL

_____
Signature of Notary Public

of _____County

State of _____

My Commission Expires:_____

DEBARMENT CERTIFICATION

Conditions for certification:

1. The prequalified bidder shall provide immediate written notice to the Department if at any time the bidder learns that his certification was erroneous when he submitted his debarment certification or explanation filed with the Department, or has become erroneous because of changed circumstances.

2. The terms *covered transaction, debarred, suspended, ineligible, lower tier covered transaction, participant, person, primary covered transaction, principal, proposal,* and *voluntarily excluded*, as used in this provision, have the meanings set out in the Definitions and Coverage sections of the rules implementing Executive Order 12549. A copy of the Federal Rules requiring this certification and detailing the definitions and coverages may be obtained from the Contract Officer of the Department.

3. The prequalified bidder agrees by submitting this form, that he will not knowingly enter into any lower tier covered transaction with a person who is debarred, suspended, declared ineligible, or voluntarily excluded from participation in NCDOT contracts, unless authorized by the Department.

4. For Federal Aid projects, the prequalified bidder further agrees that by submitting this form he will include the Federal-Aid Provision titled *Required Contract Provisions Federal-Aid Construction Contract (Form FHWA PR* 1273) provided by the Department, without subsequent modification, in all lower tier covered transactions.

5. The prequalified bidder may rely upon a certification of a participant in a lower tier covered transaction that he is not debarred, suspended, ineligible, or voluntarily excluded from the covered transaction, unless he knows that the certification is erroneous. The bidder may decide the method and frequency by which he will determine the eligibility of his subcontractors.

6. Nothing contained in the foregoing shall be construed to require establishment of a system of records in order to render in good faith the certification required by this provision. The knowledge and information of a participant is not required to exceed that which is normally possessed by a prudent person in the ordinary course of business dealings.

7. Except as authorized in paragraph 6 herein, the Department may terminate any contract if the bidder knowingly enters into a lower tier covered transaction with a person who is suspended, debarred, ineligible, or voluntarily excluded from participation in this transaction, in addition to other remedies available by the Federal Government.

DEBARMENT CERTIFICATION

The prequalified bidder certifies to the best of his knowledge and belief, that he and his principals:

a. Are not presently debarred, suspended, proposed for debarment, declared ineligible, or voluntarily excluded from covered transactions by any Federal department or agency;

b. Have not within a three-year period preceding this proposal been convicted of or had a civil judgment rendered against them for commission of fraud or a criminal offense in connection with obtaining, attempting to obtain, or performing a public (Federal, State or local) transaction or contract under a public transaction; violation of Federal or State antitrust statutes or commission of embezzlement, theft, forgery, bribery, falsification or destruction of records; making false statements; or receiving stolen property;

c. Are not presently indicted for or otherwise criminally or civilly charged by a governmental entity (Federal, State or local) with commission of any of the offenses enumerated in paragraph b. of this certification; and

d. Have not within a three-year period preceding this proposal had one or more public transactions (Federal, State or local) terminated for cause or default.

e. Will submit a revised Debarment Certification immediately if his status changes and will show in his bid proposal an explanation for the change in status.

If the prequalified bidder cannot certify that he is not debarred, he shall provide an explanation with this submittal. An explanation will not necessarily result in denial of participation in a contract.

Failure to submit a non-collusion affidavit and debarment certification will result in the prequalified bidder's bid being considered non-responsive.

☐ Check here if an explanation is attached to this certification.

LISTING OF MBE/WBE SUBCONTRACTORS

Sheet _____ of _____

Firm Name and Address	Circle One	Item No.	Item Description	* Agreed upon Unit Price	** Dollar Volume of Item
Name Address	MBE WBE				
Name Address	MBE WBE				
Name Address	MBE WBE				
Name Address	MBE WBE				
Name Address	MBE WBE				
Name Address	MBE WBE				

***** The Dollar Volume shown in this column shall be the Actual Price Agreed Upon by the Prime Contractor and the MBE/WBE subcontractor, and these prices will be used to determine the percentage of the MBE/WBE participation in the contract.
** Dollar Volume of MBE/WBE Subcontractor Percentage of Total Contract Bid Price:
If firm is a Material Supplier Only, show Dollar Volume as 60% of Agreed Upon Amount from Letter of Intent.
If firm is a Manufacturer, show Dollar Volume as 100% of Agreed Upon Amount from Letter of Intent.

LISTING OF MBE/WBE SUBCONTRACTORS

Sheet _____ of _____

Firm Name and Address	Circle One	Item No.	Item Description	* Agreed upon Unit Price	** Dollar Volume of Item
Name Address	MBE WBE				
Name Address	MBE WBE				
Name Address	MBE WBE				
Name Address	MBE WBE				
Name Address	MBE WBE				

**** Dollar Volume of MBE Subcontractor $ _____**

MBE Percentage of Total Contract Bid Price _____%

**** Dollar Volume of WBE Subcontractor $ _____**

WBE Percentage of Total Contract Bid Price _____%

***The Dollar Volume shown in this column shall be the Actual Price Agreed Upon by the Prime Contractor and the MBE/WBE subcontractor, and these prices will be used to determine the percentage of the MBE/WBE participation in the contract.**

**** Dollar Volume of MBE/WBE Subcontractor Percentage of Total Contract Bid Price.**
If firm is a Material Supplier Only, show Dollar Volume as 60% of Agreed Upon Amount from Letter of Intent.
If firm is a Manufacturer, show Dollar Volume as 100% of Agreed Upon Amount from Letter of Intent.

ADDENDA

ADDENDUM #1

I, _____ representing _____
(SIGNATURE)

Acknowledge receipt of Addendum #1.

ADDENDUM #2

I, _____ representing _____
(SIGNATURE)

Acknowledge receipt of Addendum #2.

ADDENDUM #3

I, _____ representing _____
(SIGNATURE)

Acknowledge receipt of Addendum #3.

CONTRACT BID FORM D7POC182

WBS Element: **41737.6**
County: **Alamance**
Description: **Construction of a Concrete Pad for a7000 Gallon Emulsion Tank**

Line #	Sect. #	Item Description	QTY	Unit	Unit Price	Bid Amount
1	825	Reinforced Pad	15	CY		
2	SP	Labor and Equipment	1	LS		
				TOTAL AMOUNT BID		

CONTRACTOR_____

FEDERAL ID: _____

ADDRESS_____

PHONE _____

AUTHORIZED AGENT_____

TITLE _____

SIGNATURE_____

DATE _____

EXECUTION OF CONTRACT

Contract No: D7POC182

County: Alamance County

ACCEPTED BY THE DEPARTMENT

_____

Proposals Engineer

_____

Date

EXECUTION OF CONTRACT AND BONDS
APPROVED AS TO FORM:

_____

Division Engineer

_____

Date

Signature Sheet (Bid) - ACCEPTANCE SHEET

Recommended for Slab for Storage Tanks 7000 Gallon and 8000 Gallon

1. 12″ thick slab with bottom reinforcing of #6's at 9″ spacing in both directions, and top reinforcing of #5's at 5″ spacing in both directions. Clear cover of 2.25″ should be provided to top rebar layer, and 2.5″ to bottom layer of rebar.

2. 1/2″ thick 14″ x 14″ lag plates anchored to the slab via 4-#4 bars per plate, embedded into slab. Due to slab being 12″ thick, would put 90 degree bend at approximately 9.5″ down and extend past the bend 4″ min.

3. 2′ diameter by 3′ deep drilled shafts placed beneath the slab at each of the 4 legs to provide lateral support and extra dead load to resist potential uplift. 2′ diameter shaft reinforcing consists of 8-#7's vertical enclosed within a #3 spiral at 6″ pitch. Vertical rebar should be extended 6″ minimum into slab.

Above recommendations are made assuming 3,000 psi concrete and 60,000 psi reinforcing steel are used.

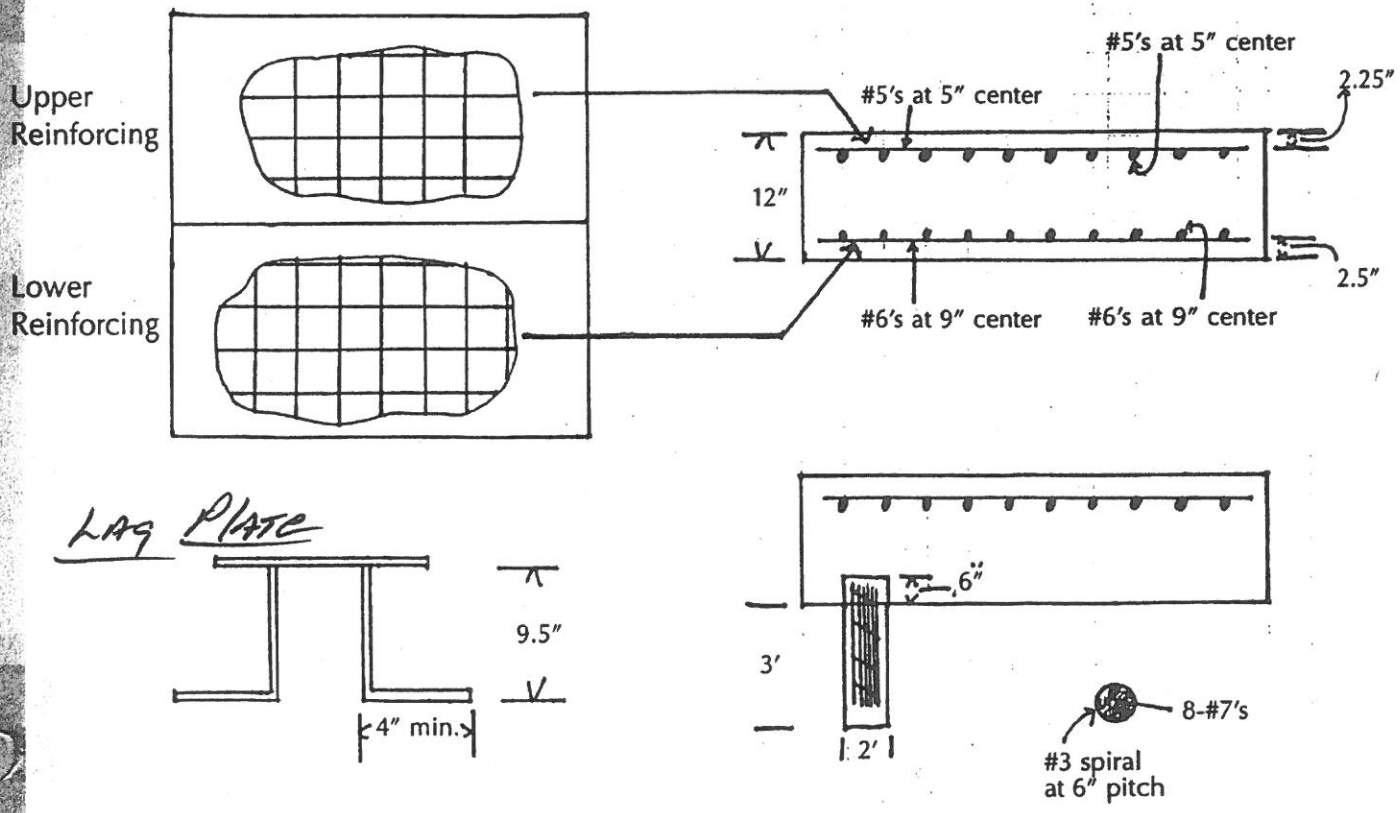

DIMENSIONS FOR DURA TANK PADS
FOR
7000 GALLON TANKS AND 8000 GALLON TANKS

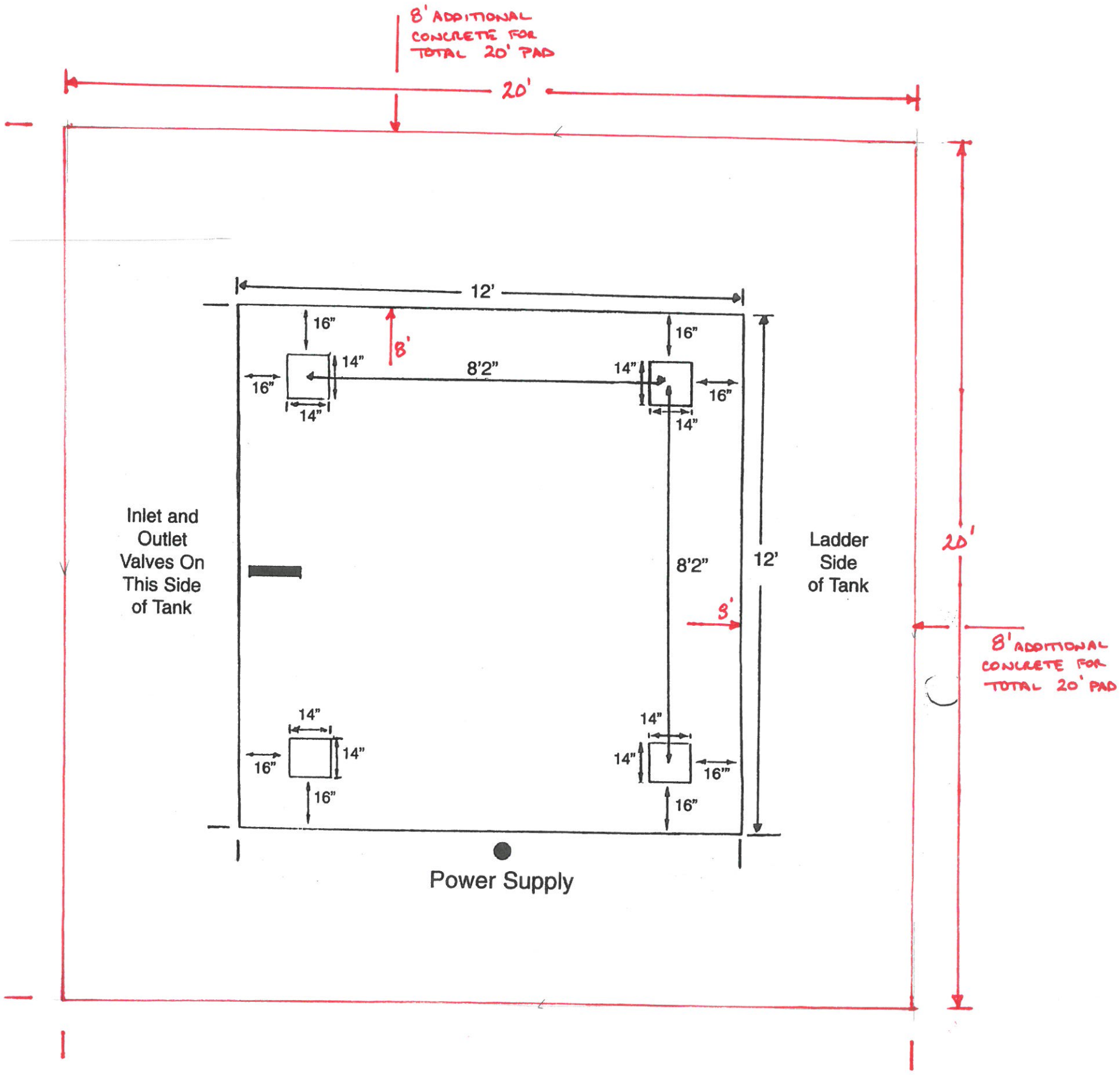

Foundation preparation, installation, and wiring of asphalt storage tank is not included and would be the responsibility of the customer. Any requirements necessary to meet ADEM or EPA regulations would also be the responsibility of the customer.

Contact Duraco, Inc. for suggested tank pad specs.