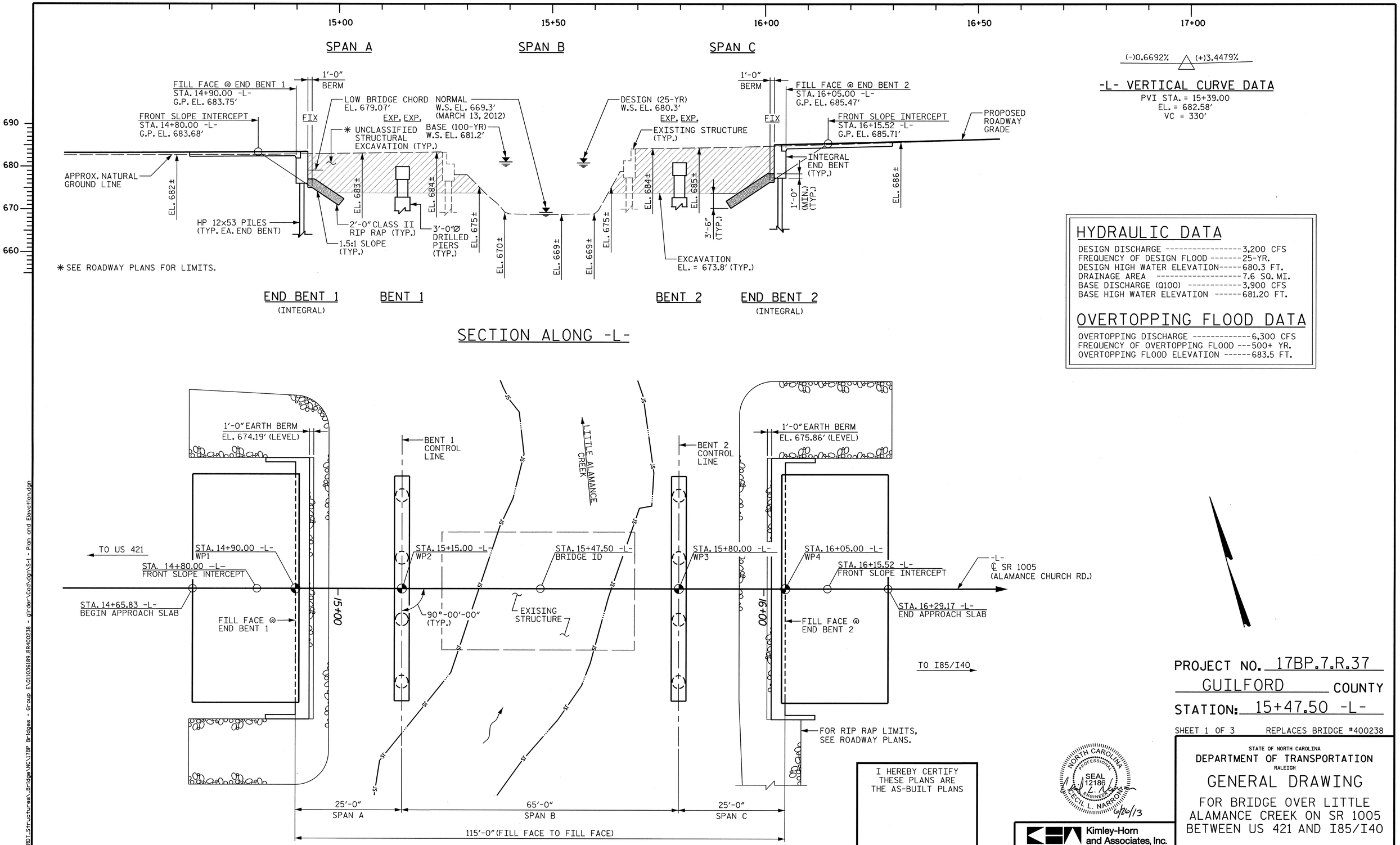
15+00
15+50
16+00
16+50
17+00
SPAN A
SPAN B
SPAN C
690
680
670
660
FILL FACE @ END BENT 1
STA. 14+90.00 -L-
G.P. EL. 683.75'
1'-0" BERM
FRONT SLOPE INTERCEPT
STA. 14+80.00 -L-
G.P. EL. 683.68'
FIX
LOW BRIDGE CHORD
EL. 679.07'
EXP. EXP.
NORMAL
W.S. EL. 669.3'
(MARCH 13, 2012)
BASE (100-YR)
W.S. EL. 681.2'
✳ UNCLASSIFIED
STRUCTURAL
EXCAVATION (TYP.)
APPROX. NATURAL
GROUND LINE
EL. 682±
EL. 683±
EL. 684±
EL. 675±
EL. 670±
HP 12x53 PILES
(TYP. EA. END BENT)
2'-0" CLASS II
RIP RAP (TYP.)
3'-0"Ø
DRILLED
PIERS
(TYP.)
1.5:1 SLOPE
(TYP.)
✳ SEE ROADWAY PLANS FOR LIMITS.
DESIGN (25-YR)
W.S. EL. 680.3'
EXP. EXP.
EXISTING STRUCTURE
(TYP.)
EL. 669±
EL. 669±
EL. 675±
EL. 684±
EL. 685±
3'-6"
(TYP.)
EXCAVATION
EL. = 673.8' (TYP.)
1'-0"
BERM
FILL FACE @ END BENT 2
STA. 16+05.00 -L-
G.P. EL. 685.47'
FIX
FRONT SLOPE INTERCEPT
STA. 16+15.52 -L-
G.P. EL. 685.71'
PROPOSED
ROADWAY
GRADE
INTEGRAL
END BENT
(TYP.)
1'-0"
(MIN.)
(TYP.)
EL. 686±
END BENT 1
(INTEGRAL)
BENT 1
BENT 2
END BENT 2
(INTEGRAL)
SECTION ALONG -L-
(-)0.6692%
(+)3.4479%
-L- VERTICAL CURVE DATA
PVI STA. = 15+39.00
EL. = 682.58'
VC = 330'
HYDRAULIC DATA
DESIGN DISCHARGE ----------3,200 CFS
FREQUENCY OF DESIGN FLOOD -------25-YR.
DESIGN HIGH WATER ELEVATION-----680.3 FT.
DRAINAGE AREA ----------7.6 SQ. MI.
BASE DISCHARGE (Q100) ----------3,900 CFS
BASE HIGH WATER ELEVATION ------681.20 FT.
OVERTOPPING FLOOD DATA
OVERTOPPING DISCHARGE ----------6,300 CFS
FREQUENCY OF OVERTOPPING FLOOD ---500+ YR.
OVERTOPPING FLOOD ELEVATION ------683.5 FT.
1'-0" EARTH BERM
EL. 674.19' (LEVEL)
BENT 1
CONTROL
LINE
LITTLE ALAMANCE
CREEK
BENT 2
CONTROL
LINE
1'-0" EARTH BERM
EL. 675.86' (LEVEL)
TO US 421
STA. 14+90.00 -L-
WP1
STA. 14+80.00 -L-
FRONT SLOPE INTERCEPT
STA. 14+65.83 -L-
BEGIN APPROACH SLAB
FILL FACE @
END BENT 1
15+00
STA. 15+15.00 -L-
WP2
90°-00'-00"
(TYP.)
STA. 15+47.50 -L-
BRIDGE ID
EXISING
STRUCTURE
STA. 15+80.00 -L-
WP3
16+00
STA. 16+05.00 -L-
WP4
STA. 16+15.52 -L-
FRONT SLOPE INTERCEPT
-L-
℄ SR 1005
(ALAMANCE CHURCH RD.)
STA. 16+29.17 -L-
END APPROACH SLAB
FILL FACE @
END BENT 2
TO I85/I40
FOR RIP RAP LIMITS,
SEE ROADWAY PLANS.
25'-0"
SPAN A
65'-0"
SPAN B
25'-0"
SPAN C
115'-0" (FILL FACE TO FILL FACE)
PLAN
(DRILLED PIERS AND PILES NOT SHOWN IN PLAN VIEW)
I HEREBY CERTIFY
THESE PLANS ARE
THE AS-BUILT PLANS
NORTH CAROLINA
PROFESSIONAL
SEAL
12186
ENGINEER
CECIL L. NARRONG
6/26/13
Kimley-Horn
and Associates, Inc.
333 Fayetteville Street, Suite 600
Raleigh, NC 27601-1772
Phone (919) 835-1494
NC LICENSE #
F-0102
This document, together with the concepts and designs presented herein, as an instrument of services, is intended only for the specific purpose and client for which it was prepared. Reuse of and improper reliance on this document without written consent by Kimley-Horn and Associates, Inc. shall be without liability to Kimley-Horn and Associates, Inc.
Copyright Kimley-Horn and Associates, Inc., 2013
PROJECT NO. 17BP.7.R.37
GUILFORD COUNTY
STATION: 15+47.50 -L-
SHEET 1 OF 3
REPLACES BRIDGE #400238
STATE OF NORTH CAROLINA
DEPARTMENT OF TRANSPORTATION
RALEIGH
GENERAL DRAWING
FOR BRIDGE OVER LITTLE
ALAMANCE CREEK ON SR 1005
BETWEEN US 421 AND I85/I40
REVISIONS
NO. BY: DATE: NO. BY: DATE:
1
2
3
4
SHEET NO.
S-1
TOTAL SHEETS
32
DRAWN BY: CRA DATE: 6/13
CHECKED BY: JCW DATE: 6/13
K:\ROT_Structures_Bridge\NC\17BP Bridges - Group E\01103689_BR400238 - girder\Cad\dgn\S-1 - Plan and Elevation.dgn
6/26/2013

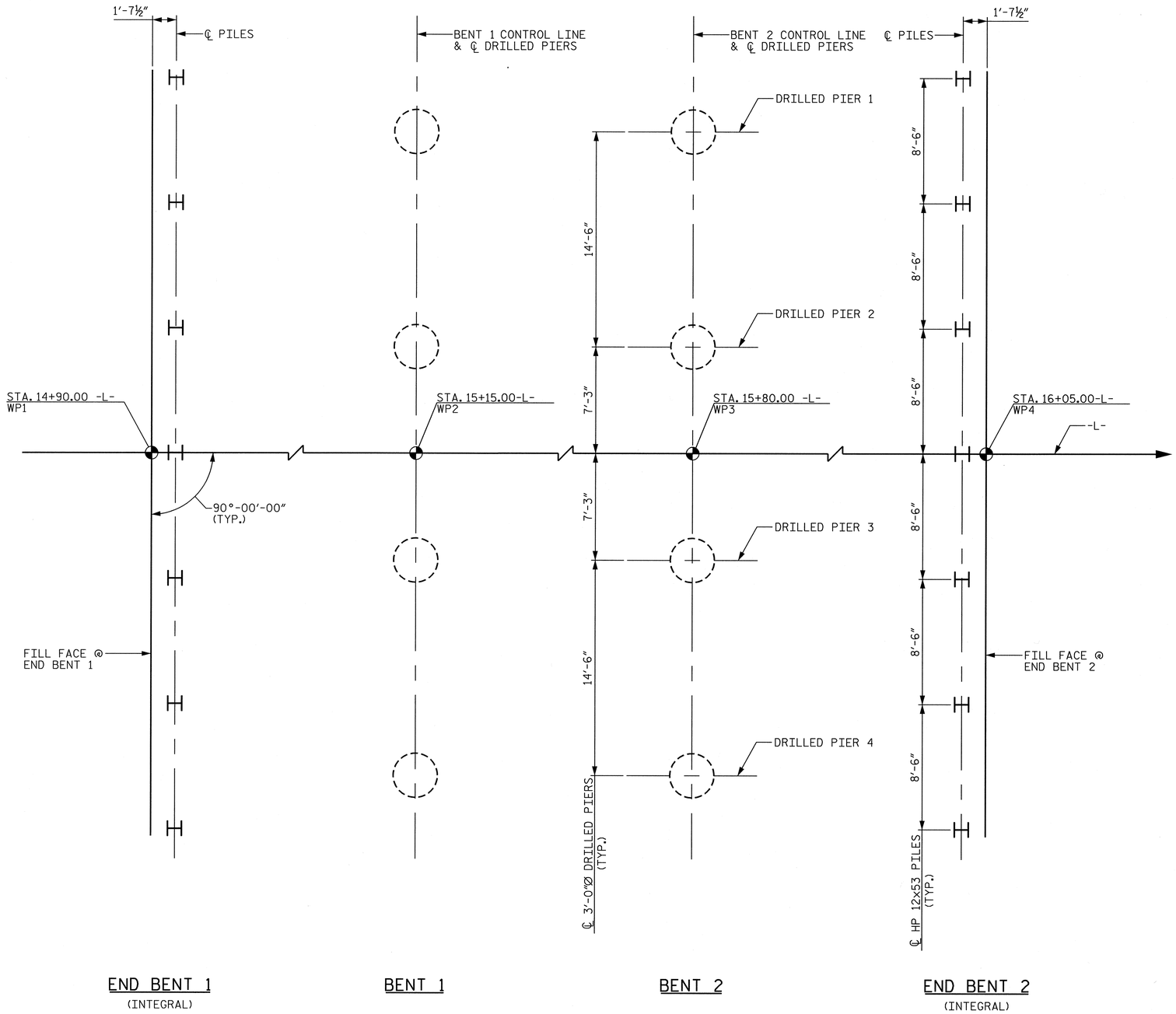

FOUNDATION LAYOUT

(DIMENSIONS LOCATING PILES ARE SHOWN TO THE PILE CENTERLINE AT BOTTOM OF CAP.)

NOTES

FOR PILES, SEE SECTION 450 OF THE STANDARD SPECIFICATIONS.

PILES AT END BENT 1 AND 2 ARE DESIGNED FOR A FACTORED RESISTANCE OF 75 TONS PER PILE.

DRIVE PILES AT END BENT 1 AND 2 TO A REQUIRED DRIVING RESISTANCE OF 125 TONS PER PILE.

STEEL H-PILE POINTS ARE REQUIRED FOR STEEL H-PILES AT END BENT 1 AND 2. FOR STEEL PILE POINTS, SEE SECTION 450 OF THE STANDARD SPECIFICATIONS.

FOR DRILLED PIERS, SEE SECTION 411 OF THE STANDARD SPECIFICATIONS.

DRILLED PIERS AT BENT 1 ARE DESIGNED FOR A FACTORED RESISTANCE OF 365 TONS PER PIER. CHECK FIELD CONDITIONS FOR THE REQUIRED TIP RESISTANCE OF 120 TSF.

INSTALL DRILLED PIERS AT BENT 1 TO A TIP ELEVATION NO HIGHER THAN 659.5 FT, LEFT, AND 659 FT, RIGHT, AND WITH THE REQUIRED TIP RESISTANCE AND PENETRATION INTO ROCK OF AT LEAST 4 FT, LEFT AND 4.5 FT, RIGHT AS DEFINED BY ARTICLE 411-1 OF THE STANDARD SPECIFICATIONS.

DRILLED PIERS AT BENT 2 ARE DESIGNED FOR A FACTORED RESISTANCE OF 365 TONS PER PIER. CHECK FIELD CONDITIONS FOR THE REQUIRED TIP RESISTANCE OF 120 TSF.

INSTALL DRILLED PIERS AT BENT 2 TO A TIP ELEVATION NO HIGHER THAN 661 FT, LEFT, AND 657 FT, RIGHT, AND WITH THE REQUIRED TIP RESISTANCE AND PENETRATION INTO ROCK OF AT LEAST 5 FT, AS DEFINED BY ARTICLE 411-1 OF THE STANDARD SPECIFICATIONS.

CSL TUBES ARE REQUIRED AND CSL TESTING MAY BE REQUIRED FOR DRILLED PIERS. THE ENGINEER WILL DETERMINE THE NEED FOR CSL TESTING. FOR CSL TESTING, SEE SECTION 411 OF THE STANDARD SPECIFICATIONS.

THE SCOUR CRITICAL ELEVATION FOR BENT 1 AND 2 IS ELEVATION 667 FT. SCOUR CRITICAL ELEVATIONS ARE USED TO MONITOR POSSIBLE SCOUR PROBLEMS DURING THE LIFE OF THE STRUCTURE.

PROJECT NO. 17BP.7.R.37
GUILFORD COUNTY
STATION: 15+47.50 -L-

SHEET 2 OF 3 REPLACES BRIDGE #400238

NORTH CAROLINA PROFESSIONAL SEAL 12186 ENGINEER CECIL L. NARRONG
6/26/13

Kimley-Horn and Associates, Inc.
333 Fayetteville Street, Suite 600
Raleigh, NC 27601-1772
Phone (919) 835-1494
NC LICENSE # F-0102

This document, together with the concepts and designs presented herein, as an instrument of services, is intended only for the specific purpose and client for which it was prepared. Reuse of and improper reliance on this document without written authorization and adaption by Kimley-Horn and Associates, Inc. shall be without liability to Kimley-Horn and Associates, Inc.
Copyright Kimley-Horn and Associates, Inc., 2013

STATE OF NORTH CAROLINA
DEPARTMENT OF TRANSPORTATION
RALEIGH

GENERAL DRAWING
FOR BRIDGE OVER LITTLE ALAMANCE CREEK ON SR 1005 BETWEEN US 421 AND I85/I40

REVISIONS						SHEET NO.
NO.	BY:	DATE:	NO.	BY:	DATE:	S-2
1			3			TOTAL SHEETS
2			4			32

DRAWN BY: CRA DATE: 6/13
CHECKED BY: JCW DATE: 6/13

6/26/2013 K:\RDT_Structures_Bridge\NC\17BP Bridges - Group E\01103189.BR400238 - girder\Cad\dgn\S-2 - Foundation Plan.dgn

BENCHMARK: BM #1 -L- STA. 14+68.09, OFFSET 100.57' LT, ELEV. 675.74', R/R SPIKE IN 12" SWEET GUM

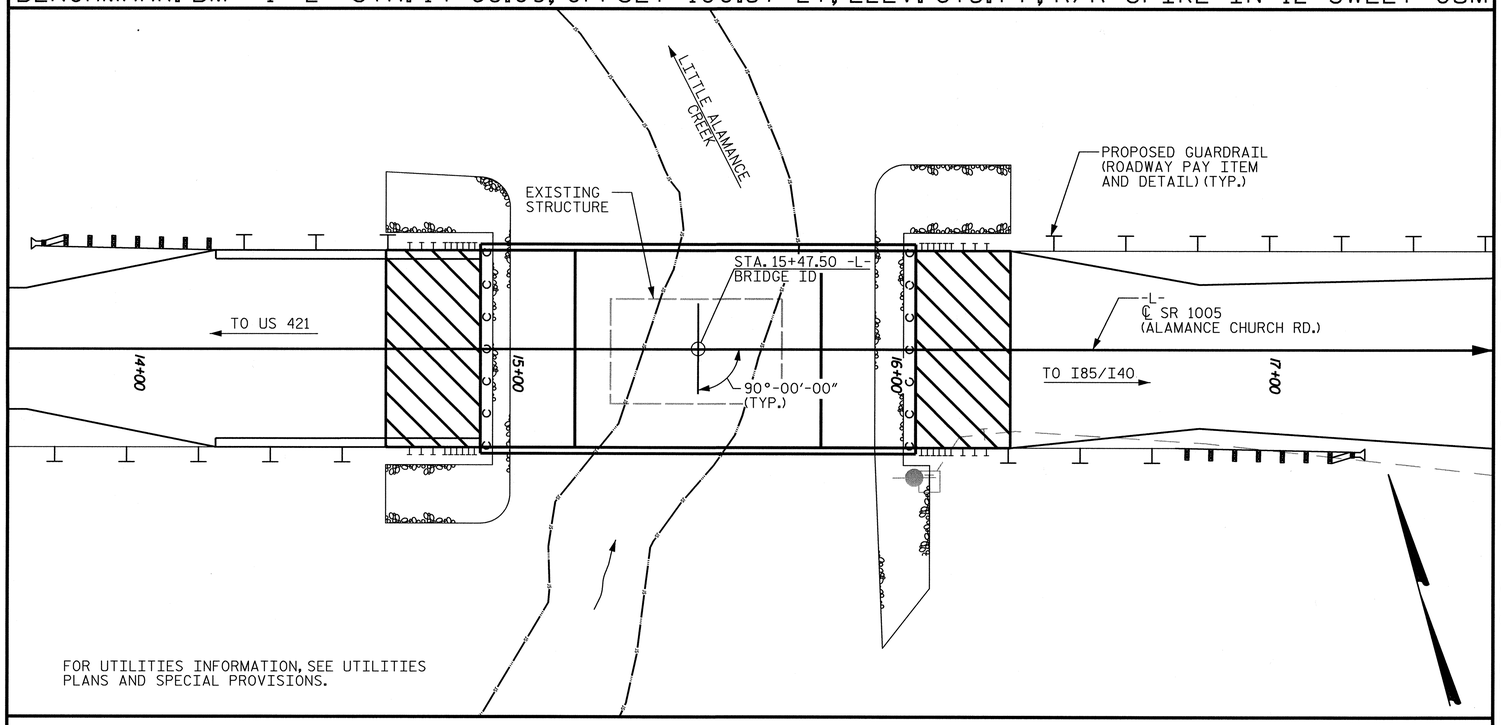

LOCATION SKETCH

NOTES

THIS BRIDGE HAS BEEN DESIGNED IN ACCORDANCE WITH THE AASHTO LRFD DESIGN SPECIFICATIONS.

ASSUMED LIVE LOAD = HL-93 OR ALTERNATE LOADING.

THIS BRIDGE LOCATED IN SEISMIC ZONE 1.

FOR OTHER DESIGN DATA AND GENERAL NOTES, SEE SHEET SN.

FOR EROSION CONTROL MEASURES, SEE EROSION CONTROL PLANS.

FOR ADDITIONAL INFORMATION REGARDING DRAINAGE, GRADING, AND ROADWAY, SEE ROADWAY PLANS.

THIS STRUCTURE HAS BEEN DESIGNED IN ACCORDANCE WITH "HEC 18 - EVALUATING SCOUR AT BRIDGES."

FOR CRANE SAFETY, SEE SPECIAL PROVISIONS.

FOR FALSEWORK AND FORMWORK, SEE SPECIAL PROVISIONS.

FOR GROUT FOR STRUCTURES, SEE SPECIAL PROVISIONS.

FOR SUBMITTAL OF WORKING DRAWINGS, SEE SPECIAL PROVISIONS.

THE EXISTING STRUCTURE CONSISTING OF (1) SPAN OF 44'-0" WITH REINFORCED CONCRETE DECK ON STEEL GIRDERS, AND A CLEAR ROADWAY WIDTH OF 31' ON REINFORCED CONCRETE VERTICAL ABUTMENTS TO BE REPLACED, IN PLACE, WITH THE PROPOSED STRUCTURE. THE EXISTING BRIDGE IS PRESENTLY POSTED BELOW THE LEGAL LIMIT, SHOULD THE STRUCTURAL INTEGRITY OF THE BRIDGE FURTHER DETERIORATE, THIS LOAD LIMITATION MAY BE REDUCED AS FOUND NECESSARY.

REMOVAL OF THE EXISTING BRIDGE SHALL BE PERFORMED IN A MANNER THAT PREVENTS DEBRIS FROM FALLING INTO THE WATER. THE CONTRACTOR SHALL SUBMIT DEMOLITION PLANS FOR REVIEW AND REMOVE THE BRIDGE IN ACCORDANCE WITH ARTICLE 402-2 OF THE STANDARD SPECIFICATIONS.

THE SUBSTRUCTURE OF THE EXISTING BRIDGE INDICATED ON THE PLANS IS THE BEST INFORMATION AVAILABLE. THIS INFORMATION IS SHOWN FOR THE CONVENIENCE OF THE CONTRACTOR. THE CONTRACTOR SHALL HAVE NO CLAIM WHATSOEVER AGAINST THE DEPARTMENT OF TRANSPORTATION FOR ANY DELAYS OR ADDITIONAL COST INCURRED BASED ON DIFFERENCES BETWEEN THE EXISTING BRIDGE SUBSTRUCTURE SHOWN ON THE PLANS AND THE ACTUAL CONDITIONS AT THE PROJECT SITE.

THE MATERIAL SHOWN IN THE CROSS-HATCHED AREA SHALL BE EXCAVATED AS DIRECTED BY THE ENGINEER ON THE ROADWAY AND STRUCTURES PLANS. THIS WORK WILL BE PAID FOR AT THE CONTRACT LUMP SUM PRICE FOR UNCLASSIFIED STRUCTURE EXCAVATION. SEE SECTION 412 OF THE STANDARD SPECIFICATIONS.

PRESTRESSED CONCRETE DECK PANELS MAY BE USED IN LIEU OF METAL STAY-IN-PLACE FORMS IN ACCORDANCE WITH ARTICLE 420-3 OF THE STANDARD SPECIFICATIONS.

REMOVABLE FORMS MAY BE USED IN LIEU OF METAL STAY-IN-PLACE FORMS IN ACCORDANCE WITH ARTICLE 420-3 OF THE STANDARD SPECIFICATIONS.

NORMAL WEIGHT CLASS AA CONCRETE SHALL BE USED IN ALL CAST-IN-PLACE BARRIER RAILS, DIAPHRAGMS, BRIDGE DECKS AND APPROACH SLABS.

TOTAL BILL OF MATERIALS

	REMOVAL OF EXISTING STRUCTURE @ STA. 15+47.50 -L-	3'-0" DIA. DRILLED PIERS IN SOIL	3'-0" DIA. DRILLED PIERS NOT IN SOIL	CSL TESTING	FOUNDATION EXCAVATION FOR END BENT 1 & 2 @ STA. 15+47.50 -L-	UNCLASSIFIED STRUCTURE EXCAVATION @ STA. 15+47.50 -L-	REINFORCED CONCRETE DECK SLAB	GROOVING BRIDGE FLOORS	CLASS 'A' CONCRETE	BRIDGE APPROACH SLABS	REINFORCING STEEL	SPIRAL COLUMN REINFORCING STEEL	AASHTO TYPE II PRESTRESSED GIRDERS		HP 12x53 STEEL PILES		STEEL PILE POINTS	CONCRETE BARRIER RAIL	RIP RAP CLASS II (2'-0" THICK)	GEOTEXTILE FOR DRAINAGE	ELAST. BEARINGS
	LUMP SUM	LIN. FT.	LIN. FT.	EACH	LUMP SUM	LUMP SUM	SQ. FT.	SQ. FT.	C.Y.	LUMP SUM	LBS.	LBS.	NO.	LIN. FT.	NO.	LIN. FT.	EACH	LIN. FT.	TONS	S.Y.	LUMP SUM
SUPERSTRUCTURE							6,262	8,004		LUMP SUM			21	780				226.7			LUMP SUM
END BENT 1					LUMP SUM	LUMP SUM			34.2		4,472				7	105	7		190	215	
BENT 1		30	25	1					24.6		5,914	1,432									
BENT 2		36	20	1					25.3		6,073	1,528									
END BENT 2					LUMP SUM	LUMP SUM			34.2		4,472				7	140	7		220	250	
TOTAL	LUMP SUM	66	45	2	LUMP SUM	LUMP SUM	6,262	8,004	118.3	LUMP SUM	20,931	2,960	21	780	14	245	14	226.7	410	465	LUMP SUM

PROJECT NO. 17BP.7.R.37

GUILFORD COUNTY

STATION: 15+47.50 -L-

SHEET 3 OF 3 REPLACES BRIDGE #400238

NORTH CAROLINA PROFESSIONAL SEAL 12186 ENGINEER CECIL L. NARRON 6/26/13

Kimley-Horn and Associates, Inc.
333 Fayetteville Street, Suite 600
Raleigh, NC 27601-1772
Phone (919) 835-1494
NC LICENSE # F-0102

This document, together with the concepts and designs presented herein, as an instrument of services, is intended only for the specific purpose and client for which it was prepared. Reuse of and improper reliance on this document without written consent by Kimley-Horn and Associates, Inc. shall be without liability to Kimley-Horn and Associates, Inc.

Copyright Kimley-Horn and Associates, Inc., 2013

STATE OF NORTH CAROLINA
DEPARTMENT OF TRANSPORTATION
RALEIGH

GENERAL DRAWING

FOR BRIDGE OVER LITTLE ALAMANCE CREEK ON SR 1005 BETWEEN US 421 AND I85/I40

REVISIONS						SHEET NO.
NO.	BY:	DATE:	NO.	BY:	DATE:	S-3
1			3			TOTAL SHEETS
2			4			32

DRAWN BY: CRA DATE: 6/13
CHECKED BY: JCW DATE: 6/13

6/26/2013 K:\ROT_Structures_Bridge\NC\17BP Bridges - Group E\01103689_BR400238 - girder\Cad\dgn\S-3 - Location and Bill.dgn

LOAD AND RESISTANCE FACTOR RATING (LRFR) SUMMARY FOR PRESTRESSED CONCRETE GIRDERS

LEVEL		VEHICLE	WEIGHT (W) (TONS)	CONTROLLING LOAD RATING (#)	MINIMUM RATING FACTORS (RF)	TONS = W x RF	STRENGTH I LIMIT STATE											SERVICE III LIMIT STATE						COMMENT NUMBER
							LIVE-LOAD FACTORS (γ_{LL})	MOMENT					SHEAR					LIVE-LOAD FACTORS (γ_{LL})	MOMENT					
								DISTRIBUTION FACTORS (DF)	RATING FACTOR	SPAN	GIRDER LOCATION	DISTANCE FROM LEFT END OF SPAN (ft)	DISTRIBUTION FACTORS (DF)	RATING FACTOR	SPAN	GIRDER LOCATION	DISTANCE FROM LEFT END OF SPAN (ft)		DISTRIBUTION FACTORS (DF)	RATING FACTOR	SPAN	GIRDER LOCATION	DISTANCE FROM LEFT END OF SPAN (ft)	
DESIGN LOAD RATING		HL-93 (INVENTORY)	N/A	1	1.30	--	1.75	0.681	1.47	B	I	57.500	0.826	1.40	A	I	3.854	0.80	0.681	1.30	B	I	57.500	
		HL-93 (OPERATING)	N/A		1.91	--	1.35	0.681	1.91	B	I	57.500	0.826	2.07	B	I	38.650	N/A	--	--	--	--	--	
		HS-20 (INVENTORY)	36.000	2	1.67	60.12	1.75	0.681	1.89	B	I	57.500	0.826	1.90	A	I	3.854	0.80	0.681	1.67	B	I	57.500	
		HS-20 (OPERATING)	36.000		2.46	72.72	1.35	0.681	2.46	B	I	57.500	0.826	2.57	B	I	38.650	N/A	--	--	--	--	--	
LEGAL LOAD RATING	SINGLE VEHICLE (SV)	SNSH	13.500		3.69	49.82	1.40	0.882	5.08	A	I	17.229	0.826	6.15	B	I	26.083	0.80	0.681	3.69	B	I	57.500	
		SNGARBS2	20.000		2.79	55.80	1.40	0.681	3.94	B	I	57.500	0.826	4.38	B	I	26.083	0.80	0.681	2.79	B	I	57.500	
		SNAGRIS2	22.000		2.65	58.30	1.40	0.681	3.75	B	I	51.217	0.826	4.07	B	I	26.083	0.80	0.681	2.65	B	I	57.500	
		SNCOTTS3	27.250		1.84	50.14	1.40	0.882	2.58	A	I	17.229	0.826	2.68	A	I	3.854	0.80	0.681	1.84	B	I	57.500	
		SNAGGRS4	34.925		1.55	54.13	1.40	0.681	2.19	B	I	57.500	0.826	2.38	B	I	38.650	0.80	0.681	1.55	B	I	57.500	
		SNS5A	35.550		1.51	53.68	1.40	0.681	2.14	B	I	57.500	0.826	2.35	B	I	38.650	0.80	0.681	1.51	B	I	57.500	
		SNS6A	39.950		1.40	55.93	1.40	0.681	1.97	B	I	57.500	0.826	2.15	B	I	38.650	0.80	0.681	1.40	B	I	57.500	
		SNS7B	42.000		1.33	55.86	1.40	0.681	1.88	B	I	57.500	0.826	2.14	B	I	38.650	0.80	0.681	1.33	B	I	57.500	
	TRUCK TRACTOR SEMI-TRAILER (TTST)	TNAGRIT3	33.000		1.70	56.10	1.40	0.681	2.41	B	I	57.500	0.826	2.60	B	I	38.650	0.80	0.681	1.70	B	I	57.500	
		TNT4A	33.075		1.71	56.56	1.40	0.681	2.42	B	I	57.500	0.826	2.57	B	I	38.650	0.80	0.681	1.71	B	I	57.500	
		TNT6A	41.600		1.41	58.66	1.40	0.681	1.99	B	I	57.500	0.826	2.44	B	I	38.650	0.80	0.681	1.41	B	I	57.500	
		TNT7A	42.000		1.42	59.64	1.40	0.681	2.00	B	I	57.500	0.826	2.27	B	I	38.650	0.80	0.681	1.42	B	I	57.500	
		TNT7B	42.000		1.47	61.74	1.40	0.681	2.08	B	I	57.500	0.826	2.06	B	I	38.650	0.80	0.681	1.47	B	I	57.500	
		TNAGRIT4	43.000		1.40	60.20	1.40	0.681	1.97	B	I	57.500	0.826	2.07	B	I	38.650	0.80	0.681	1.40	B	I	57.500	
		TNAGT5A	45.000		1.31	58.95	1.40	0.681	1.86	B	I	57.500	0.826	2.18	B	I	26.083	0.80	0.681	1.31	B	I	57.500	
		TNAGT5B	45.000	3	1.29	58.05	1.40	0.681	1.83	B	I	57.500	0.826	1.95	B	I	38.650	0.80	0.681	1.29	B	I	57.500	

LOAD FACTORS:

DESIGN LOAD RATING FACTORS	LIMIT STATE	γ_{DC}	γ_{DW}
	STRENGTH I	1.25	1.50
	SERVICE III	1.00	1.00

NOTES:

MINIMUM RATING FACTORS ARE BASED ON THE STRENGTH I AND SERVICE III LIMIT STATES.

ALLOWABLE STRESSES FOR SERVICE III LIMIT STATE ARE AS REQUIRED FOR DESIGN.

COMMENTS:

1.
2.
3.
4.

(#) CONTROLLING LOAD RATING

1. DESIGN LOAD RATING (HL-93)
2. DESIGN LOAD RATING (HS-20)
3. LEGAL LOAD RATING **

** SEE CHART FOR VEHICLE TYPE

GIRDER LOCATION

I - INTERIOR GIRDER
EL - EXTERIOR LEFT GIRDER
ER - EXTERIOR RIGHT GIRDER

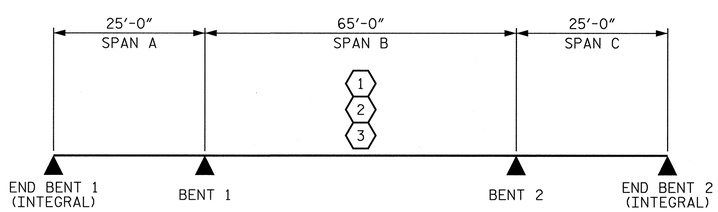

LRFR SUMMARY

PROJECT NO. 17BP.7.R.37
GUILFORD COUNTY
STATION: 15+47.50 -L-

REPLACES BRIDGE #400238

NORTH CAROLINA PROFESSIONAL SEAL 12186 ENGINEER CECIL L. NARROWS 6/26/13

Kimley-Horn and Associates, Inc.
333 Fayetteville Street, Suite 600
Raleigh, NC 27601-1772
Phone (919) 835-1494
NC LICENSE # F-0102

This document, together with the concepts and designs presented herein, as an instrument of services, is intended only for the specific purpose and client for which it was prepared. Reuse of and improper reliance of this document without written authorization and adaption by Kimley-Horn and Associates, Inc. shall be without liability to Kimley-Horn and Associates, Inc.

Copyright Kimley-Horn and Associates, Inc., 2013

STATE OF NORTH CAROLINA
DEPARTMENT OF TRANSPORTATION
RALEIGH

STANDARD
LRFR SUMMARY FOR PRESTRESSED CONCRETE GIRDERS
(NON-INTERSTATE TRAFFIC)

REVISIONS						SHEET NO.
NO.	BY:	DATE:	NO.	BY:	DATE:	S-4
1			3			TOTAL SHEETS
2			4			32

STD. NO. LRFR1

DRAWN BY : MAA 1/08	REV. 11/12/08 RR	MAA/GM	
CHECKED BY : GM/DI 2/08	REV. 10/1/11	MAA/GM	
DRAWN BY: CRA	DATE: 6/13		
CHECKED BY: JCW	DATE: 6/13		

K:\RDT_Structures_Bridge\NC\17BP Bridges - Group E\01\036189_BR400238 - girder\Cad\dgn\S-4 - LRFR Summary.dgn
6/26/2013

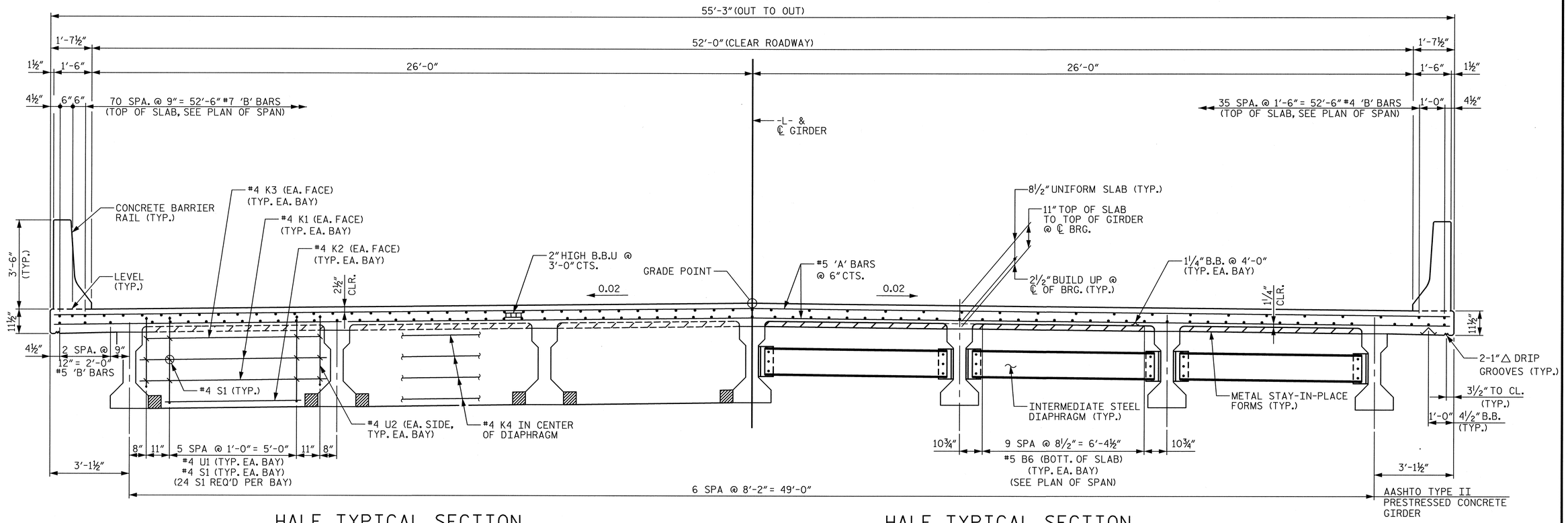

HALF TYPICAL SECTION

(SHOWING BENT DIAPHRAGM)

HALF TYPICAL SECTION

(SHOWING INTERMEDIATE DIAPHRAGM, SPAN B)

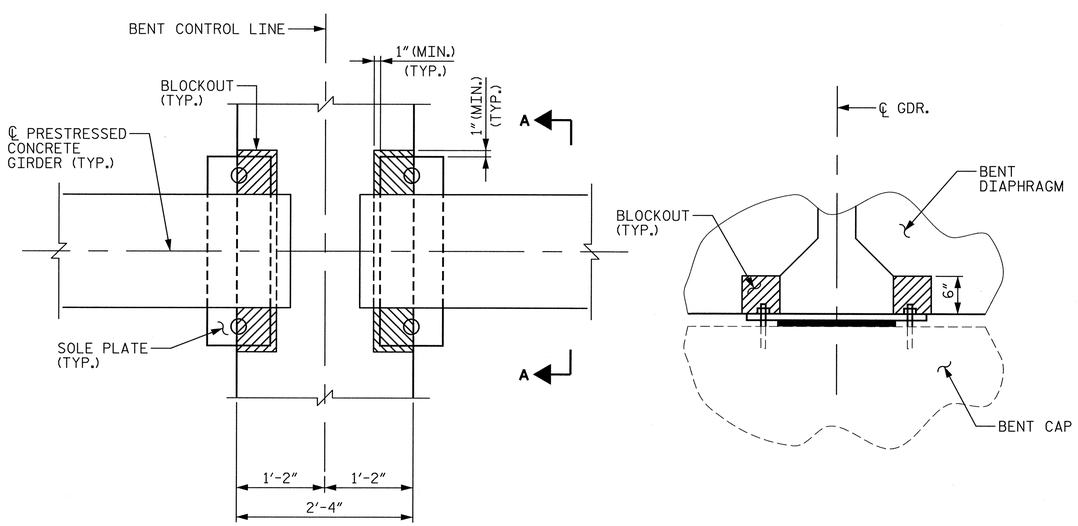

PLAN

SECTION A - A

BENT DIAPHRAGM BLOCKOUT DETAIL

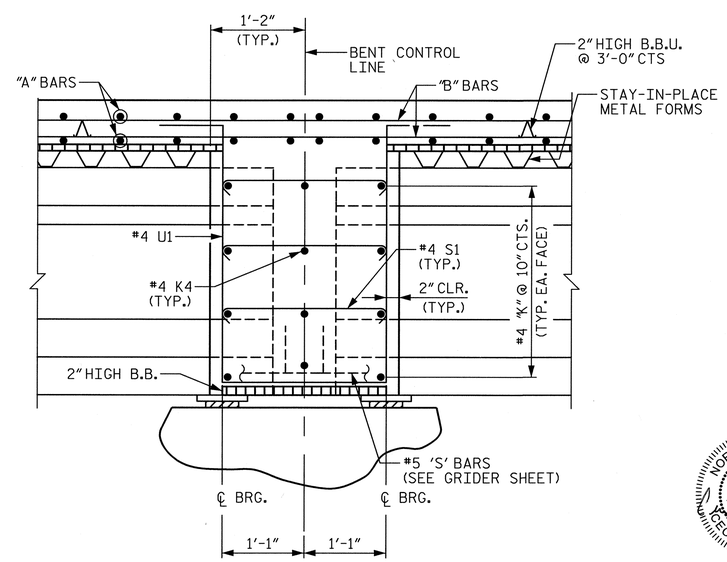

NOTE: ANCHOR BOLTS NOT SHOWN FOR CLARITY.

SECTION THRU BENT DIAPHRAGM

PROJECT NO. 17BP.7.R.37

GUILFORD COUNTY

STATION: 15+47.50 -L-

SHEET 1 OF 2 REPLACES BRIDGE #400238

STATE OF NORTH CAROLINA
DEPARTMENT OF TRANSPORTATION
RALEIGH

SUPERSTRUCTURE

TYPICAL SECTION

NORTH CAROLINA PROFESSIONAL SEAL 12186 ENGINEER CECIL L. NARRONA 6/26/13

Kimley-Horn and Associates, Inc.
333 Fayetteville Street, Suite 600
Raleigh, NC 27601-1772
Phone (919) 835-1494
NC LICENSE # F-0102

This document, together with the concepts and designs presented herein, as an instrument of service, is intended only for the specific purpose and client for which it was prepared. Reuse of and improper reliance on this document without written authorization and adaption by Kimley-Horn and Associates, Inc. shall be without liability to Kimley-Horn and Associates, Inc.
Copyright Kimley-Horn and Associates, Inc., 2013

REVISIONS						
NO.	BY:	DATE:	NO.	BY:	DATE:	
1			3			
2			4			

SHEET NO. S-5

TOTAL SHEETS 32

DRAWN BY: CRA DATE: 6/13
CHECKED BY: JCW DATE: 6/13

6/26/2013 K:\RDT_Structures_Bridge\NC\17BP Bridges - Group E\01103189_BR400238 - girder\Cad\dgn\S-5 - Typical Section.dgn

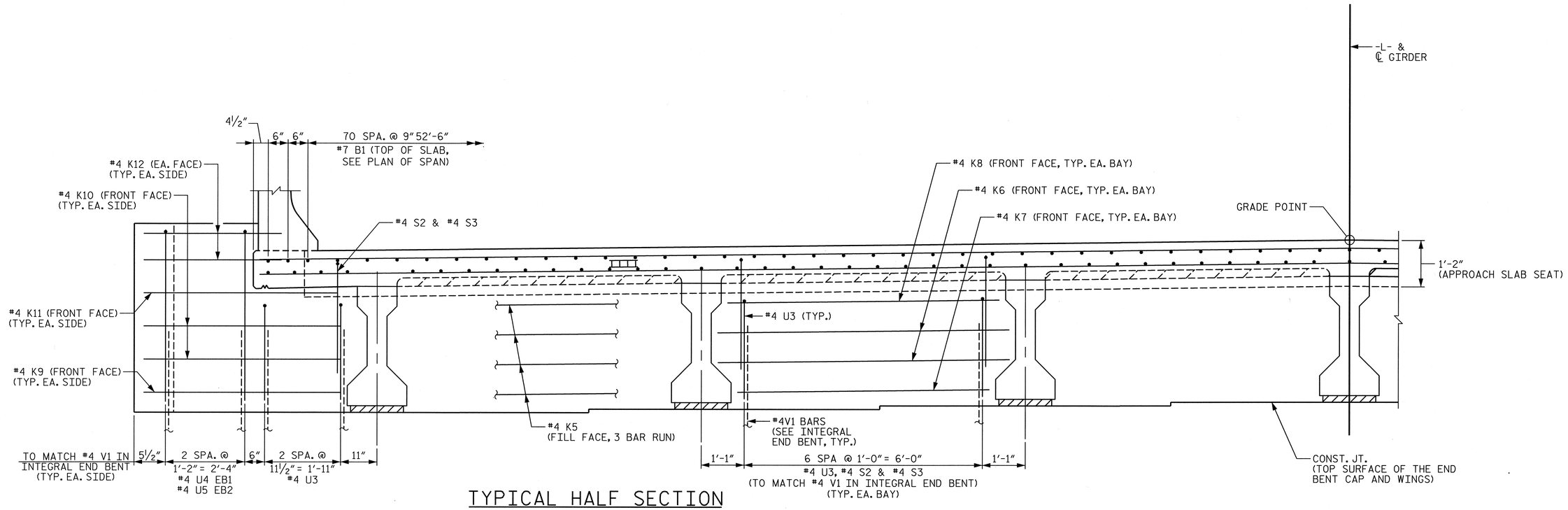

TYPICAL HALF SECTION

(SHOWING END BENT DIAPHRAGM)

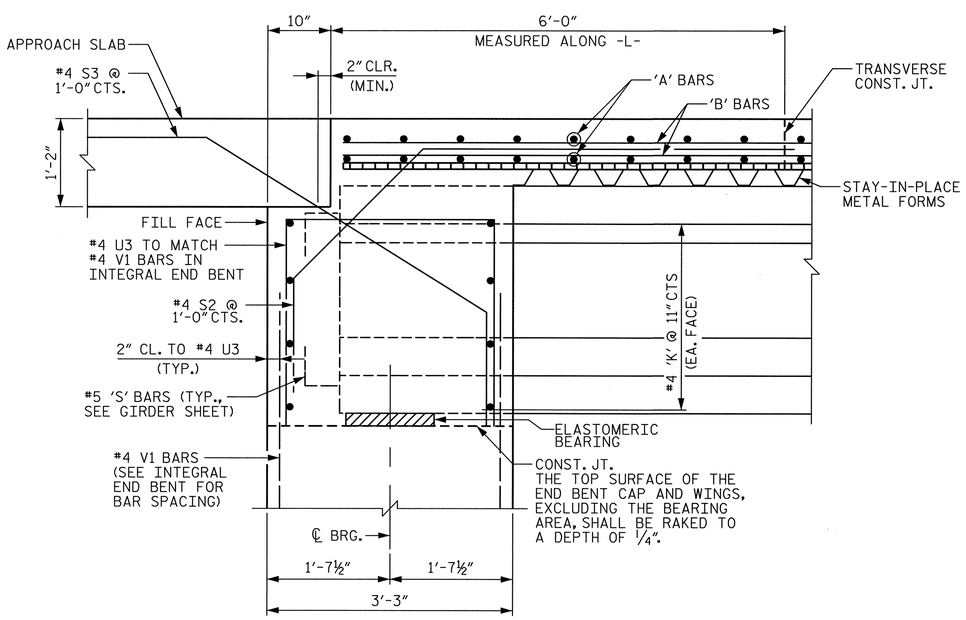

SECTION THRU INTEGRAL END BENT

DRAWN BY:	CRA	DATE:	6/13
CHECKED BY:	JCW	DATE:	6/13

PROJECT NO. 17BP.7.R.37

GUILFORD COUNTY

STATION: 15+47.50 -L-

SHEET 2 OF 2 REPLACES BRIDGE #400238

NORTH CAROLINA PROFESSIONAL SEAL 12186 ENGINEER CECIL L. NARRON 6/26/13

Kimley-Horn and Associates, Inc.
333 Fayetteville Street, Suite 600
Raleigh, NC 27601-1772
Phone (919) 835-1494
NC LICENSE # F-0102

This document, together with the concepts and designs presented herein, as an instrument of services, is intended only for the specific purpose and client for which it was prepared. Reuse of and improper reliance on this document without written authorization and adaption by Kimley-Horn and Associates, Inc. shall be without liability to Kimley-Horn and Associates, Inc.

Copyright Kimley-Horn and Associates, Inc., 2013

STATE OF NORTH CAROLINA
DEPARTMENT OF TRANSPORTATION
RALEIGH

SUPERSTRUCTURE

TYPICAL SECTION

REVISIONS						SHEET NO.
NO.	BY:	DATE:	NO.	BY:	DATE:	S-6
1			3			TOTAL SHEETS
2			4			32

6/26/2013 K:\RDT_Structures_Bridge\NC\17BP Bridges - Group EV011036189.BR400238 - girder\Cad\dgn\S-6 - TypicalSection.dgn

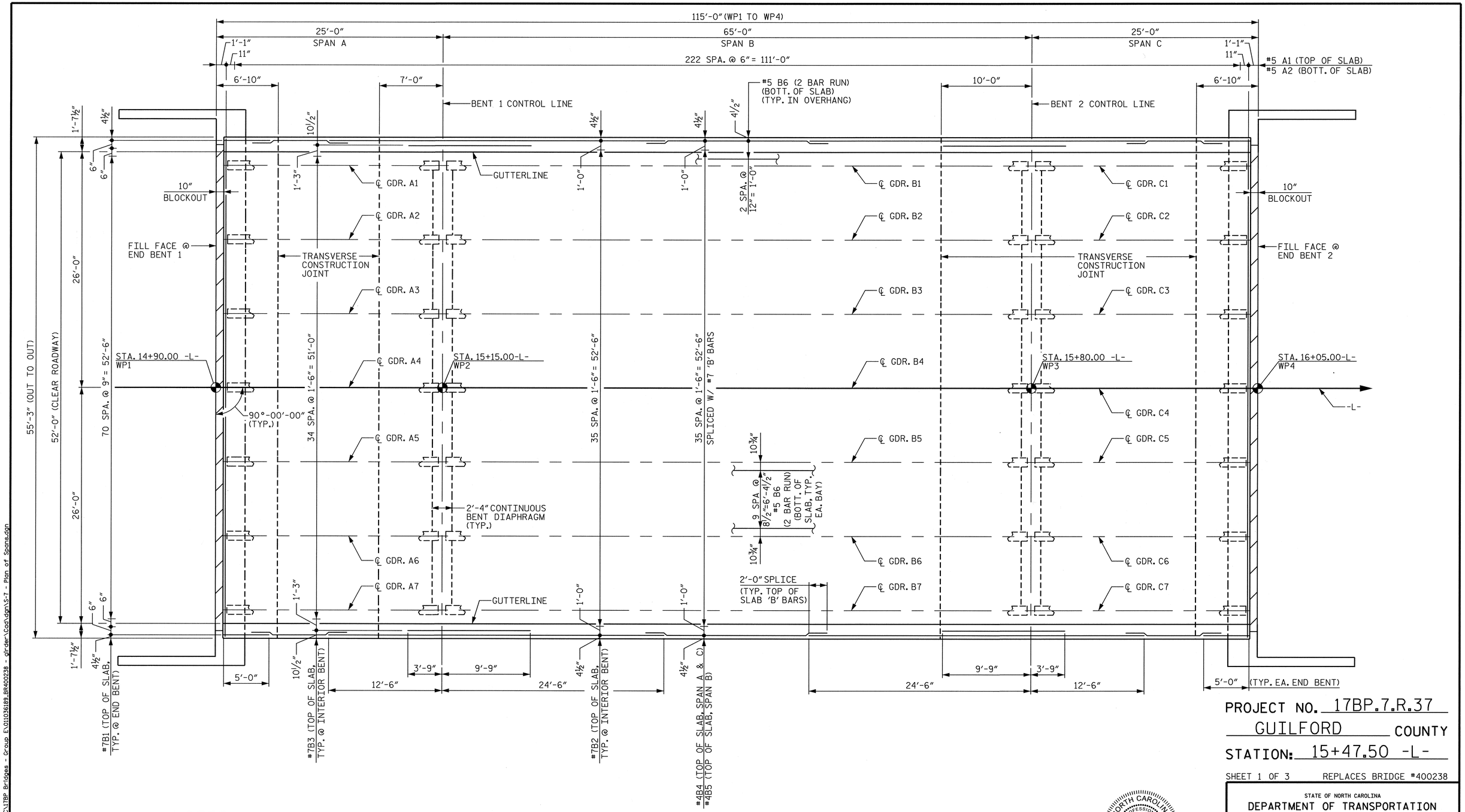

PLAN OF SPANS A - C

NOTES

FOR OPTIONAL TRANSVERSE CONSTRUCTION JOINT LOCATIONS AT INTERIOR BENTS, SEE POUR SEQUENCE SHEET.

LONGITUDINAL STEEL MAY BE SHIFTED SLIGHTLY, AS NECESSARY, TO AVOID INTERFERENCE WITH STIRRUPS IN PRESTRESSED CONCRETE GIRDERS.

PROJECT NO. 17BP.7.R.37
GUILFORD COUNTY
STATION: 15+47.50 -L-

SHEET 1 OF 3 REPLACES BRIDGE #400238

NORTH CAROLINA PROFESSIONAL SEAL 12186 ENGINEER CECIL L. NARRON
6/26/13

Kimley-Horn and Associates, Inc.
333 Fayetteville Street, Suite 600
Raleigh, NC 27601-1772
Phone (919) 835-1494
NC LICENSE # F-0102

This document, together with the concepts and designs presented herein, as an instrument of services, is intended only for the specific purpose and client for which it was prepared. Reuse of and improper reliance of this document without written authorization and adaption by Kimley-Horn and Associates, Inc. shall be without liability to Kimley-Horn and Associates, Inc.
Copyright Kimley-Horn and Associates, Inc., 2013

STATE OF NORTH CAROLINA
DEPARTMENT OF TRANSPORTATION
RALEIGH

SUPERSTRUCTURE

PLAN OF SPANS

REVISIONS						SHEET NO.
NO.	BY:	DATE:	NO.	BY:	DATE:	S-7
1			3			TOTAL SHEETS
2			4			32

DRAWN BY: CRA DATE: 6/13
CHECKED BY: JCW DATE: 6/13

6/26/2013 K:\RDT_Structures_Bridge\NC\17BP Bridges - Group E\01103689_BR400238 - girder\Cad\dgn\S-7 - Plan of Spans.dgn

NOTES

SLAB REINF. NOT SHOWN FOR CLARITY.

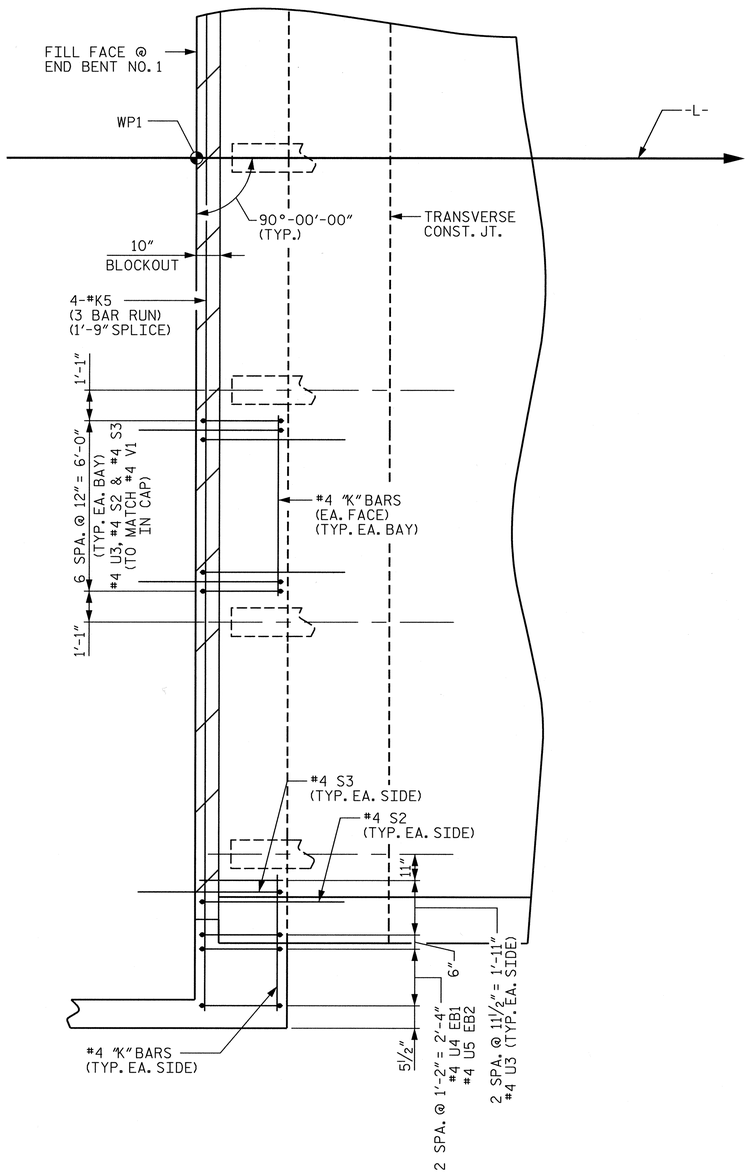

END BENT DIAPHRAGM ENLARGEMENT

(END BENT 1 SHOWN, END BENT 2 SIMILAR)

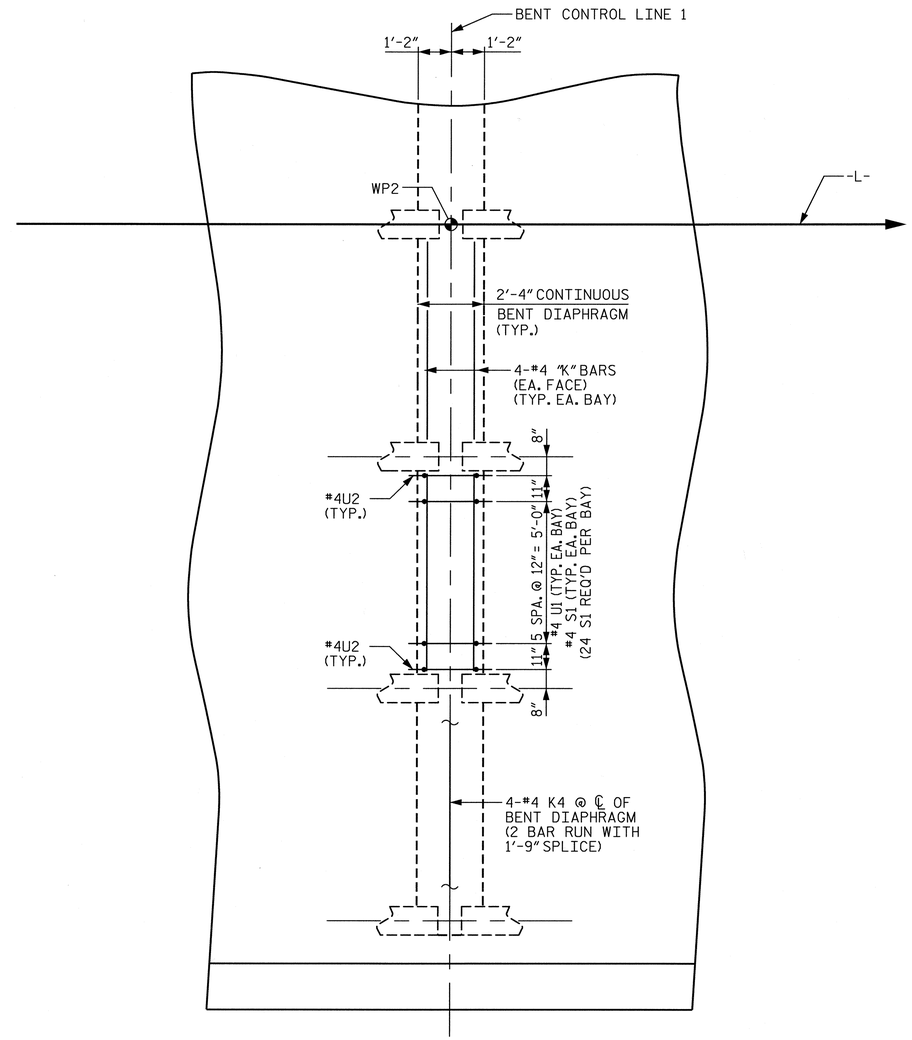

BENT DIAPHRAGM ENLARGEMENT

(BENT 1 SHOWN, BENT 2 SIMILAR)

PROJECT NO. 17BP.7.R.37

GUILFORD COUNTY

STATION: 15+47.50 -L-

SHEET 2 OF 3 REPLACES BRIDGE #400238

STATE OF NORTH CAROLINA
DEPARTMENT OF TRANSPORTATION
RALEIGH

SUPERSTRUCTURE

PLAN OF SPAN

NORTH CAROLINA PROFESSIONAL SEAL 12186 ENGINEER CECIL L. NARRON 6/26/13

Kimley-Horn and Associates, Inc.
333 Fayetteville Street, Suite 600
Raleigh, NC 27601-1772
Phone (919) 835-1494
NC LICENSE # F-0102

This document, together with the concepts and designs presented herein, as an instrument of services, is intended only for the specific purpose and client for which it was prepared. Reuse of and improper reliance on this document without written authorization and adaptation by Kimley-Horn and Associates, Inc. shall be without liability to Kimley-Horn and Associates, Inc.

Copyright Kimley-Horn and Associates, Inc., 2013

REVISIONS						SHEET NO.
NO.	BY:	DATE:	NO.	BY:	DATE:	S-8
1			3			TOTAL SHEETS
2			4			32

DRAWN BY: CRA DATE: 6/13
CHECKED BY: JCW DATE: 6/13

6/26/2013 K:\RDT_Structures_Bridges\NC\17BP Bridges - Group EV01\036189_BR400238 - girder\Cad\dgn\S-8 - Diaphragm Enlargement Half.dgn

NOTES

BARRIER RAIL NOT SHOWN FOR CLARITY.

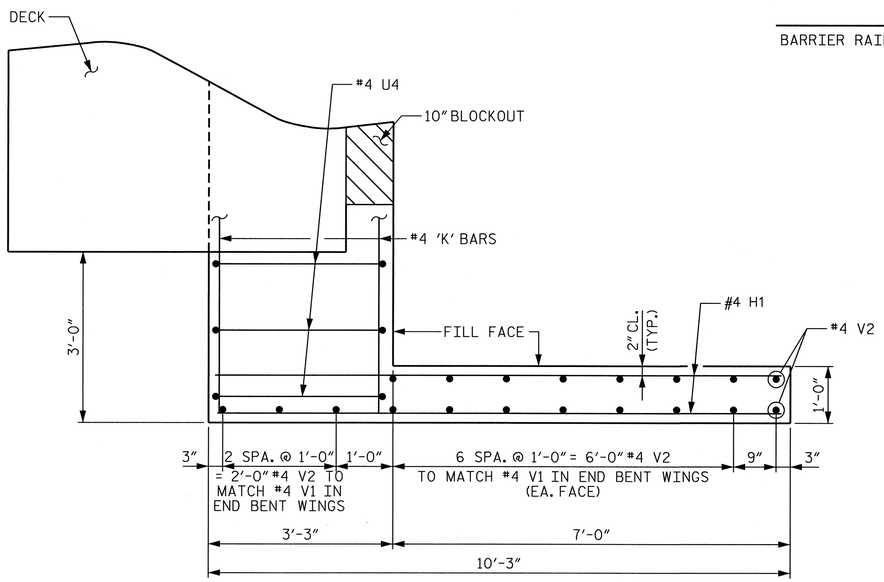

PLAN OF WING (W1)

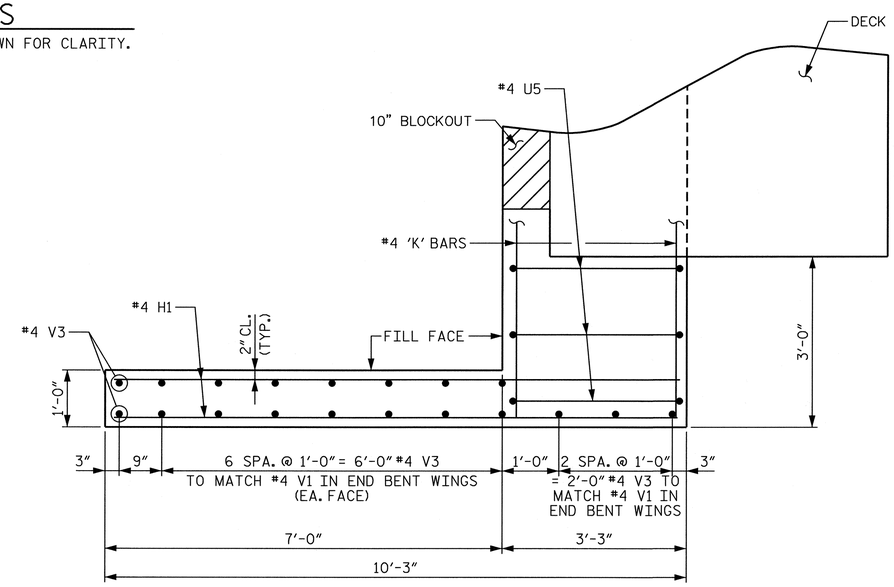

PLAN OF WING (W2)

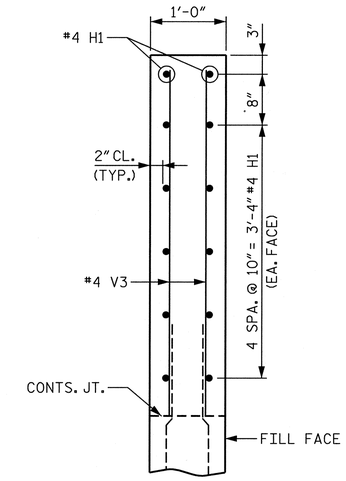

SECTION B-B

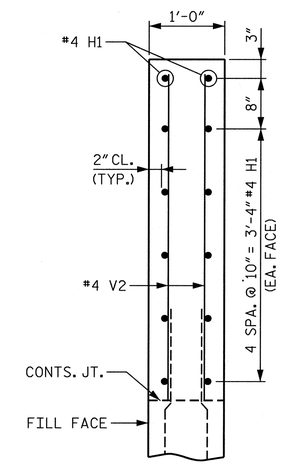

SECTION A-A

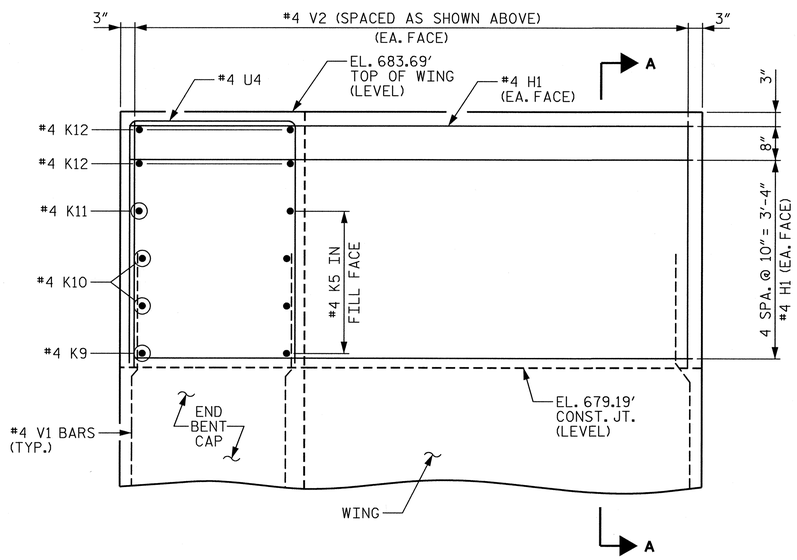

ELEVATION OF WING (W1)

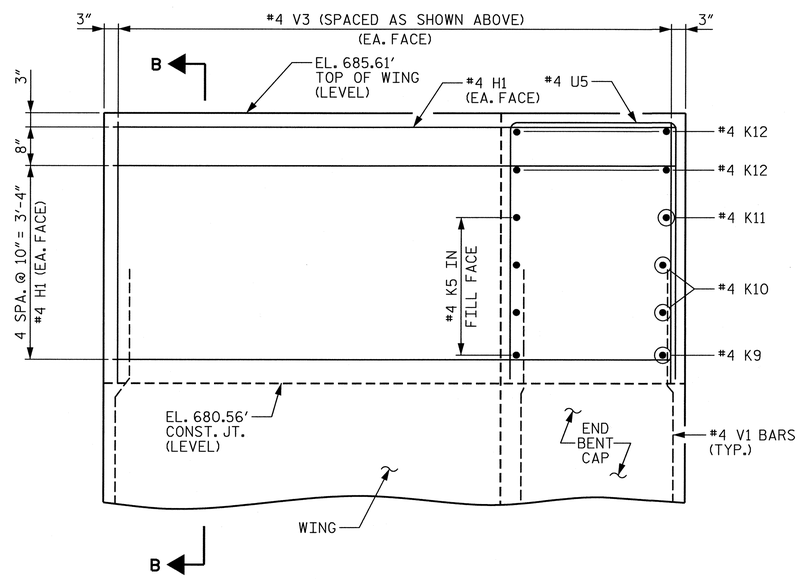

ELEVATION OF WING (W2)

ABUTMENT WINGS

(FOR END BENT REINFORCING STEEL AND DETAILS, SEE "SUBSTRUCTURE END BENTS 1 & 2" SHEETS.)

PROJECT NO. 17BP.7.R.37

GUILFORD COUNTY

STATION: 15+47.50 -L-

SHEET 3 OF 3 REPLACES BRIDGE #400238

STATE OF NORTH CAROLINA
DEPARTMENT OF TRANSPORTATION
RALEIGH

SUPERSTRUCTURE

PLAN OF SPAN DETAILS

NORTH CAROLINA PROFESSIONAL SEAL 12186 ENGINEER CECIL L. NARRON 6/26/13

Kimley-Horn and Associates, Inc.
333 Fayetteville Street, Suite 600
Raleigh, NC 27601-1772
Phone (919) 835-1494
NC LICENSE # F-0102

This document, together with the concepts and designs presented herein, as an instrument of service, is intended only for the specific purpose and client for which it was prepared. Reuse of and improper reliance on this document without written authorization and adaptation by Kimley-Horn and Associates, Inc. shall be without liability to Kimley-Horn and Associates, Inc.

Copyright Kimley-Horn and Associates, Inc., 2013

REVISIONS							SHEET NO.
NO.	BY:	DATE:	NO.	BY:	DATE:		S-9
1			3				TOTAL SHEETS
2			4				32

DRAWN BY: CRA DATE: 6/13
CHECKED BY: JCW DATE: 6/13

6/26/2013 K:\RDT_Structures_Bridge\NC\17BP Bridges - Group E\01103689_BR400238 - girder\Cad\dgn\S-9 - Abutment Wings.dgn

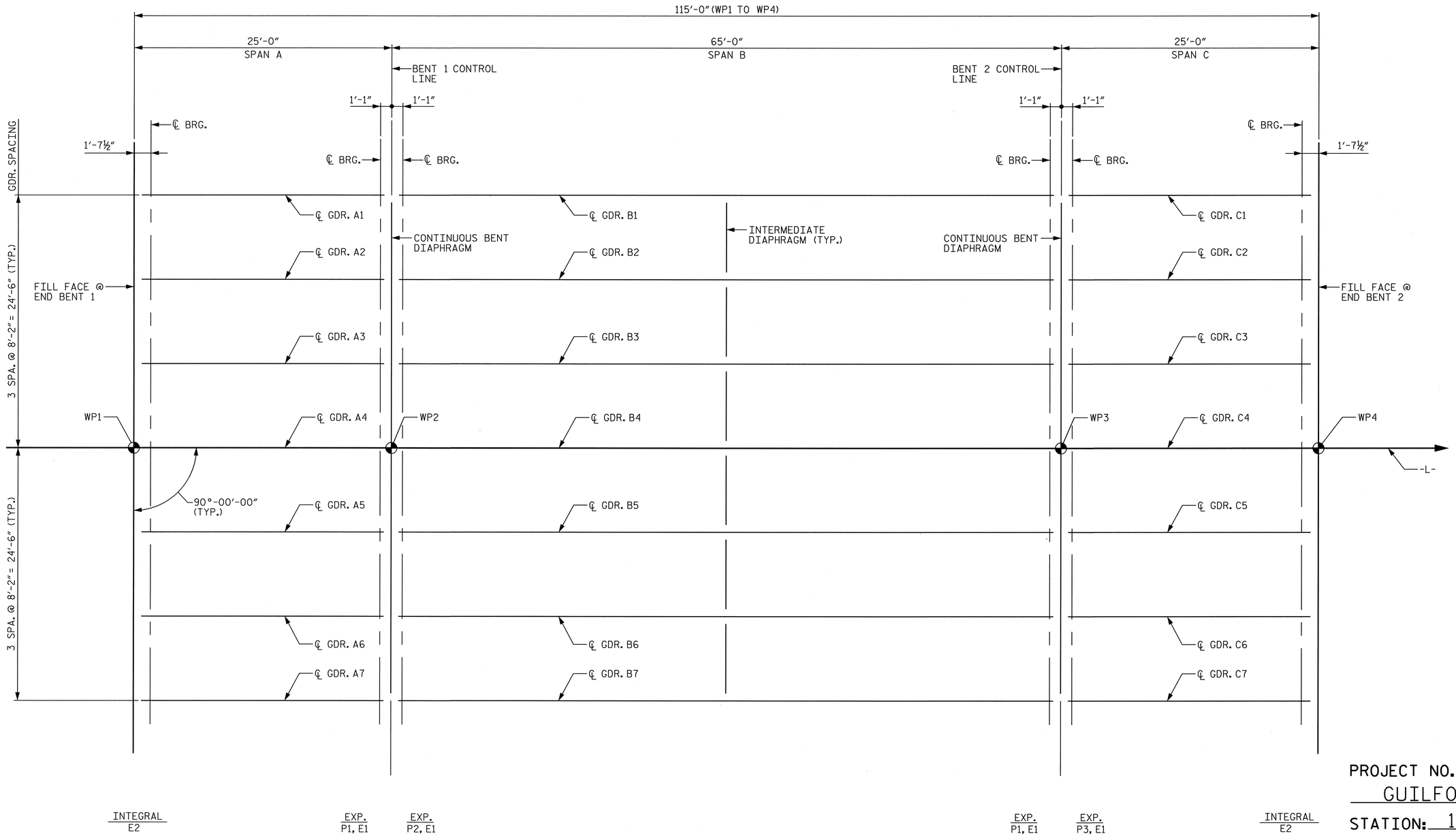

FRAMING PLAN

PROJECT NO. 17BP.7.R.37

GUILFORD COUNTY

STATION: 15+47.50 -L-

REPLACES BRIDGE #400238

STATE OF NORTH CAROLINA
DEPARTMENT OF TRANSPORTATION
RALEIGH

FRAMING PLAN

NORTH CAROLINA PROFESSIONAL SEAL 12186 ENGINEER CECIL L. NARRON 6/26/13

Kimley-Horn and Associates, Inc.
333 Fayetteville Street, Suite 600
Raleigh, NC 27601-1772
Phone (919) 835-1494
NC LICENSE # F-0102

This document, together with the concepts and designs presented herein, as an instrument of services, is intended only for the specific purpose and client for which it was prepared. Reuse of and improper reliance on this document without written consent by Kimley-Horn and Associates, Inc. shall be without liability to Kimley-Horn and Associates, Inc.

Copyright Kimley-Horn and Associates, Inc., 2013

REVISIONS						SHEET NO.
NO.	BY:	DATE:	NO.	BY:	DATE:	S-10
1			3			TOTAL SHEETS
2			4			32

DRAWN BY: CRA DATE: 6/13
CHECKED BY: JCW DATE: 6/13

6/26/2013 K:\RDT_Structures_Bridge\NC\17BP Bridges - Group E\01103189.BR400238 - girder\Cadd\dgn\S-10 - Framing Plan.dgn

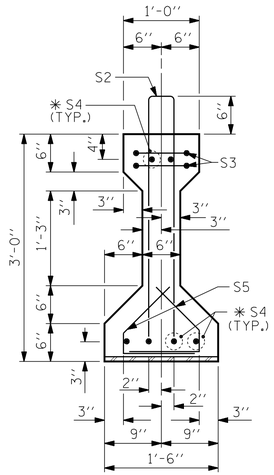

SECTION A-A

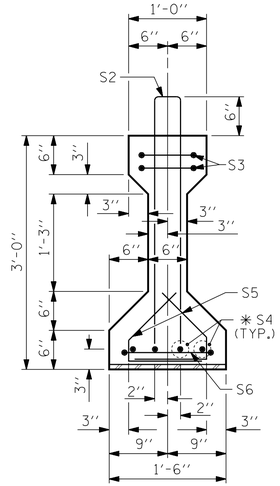

SECTION B-B

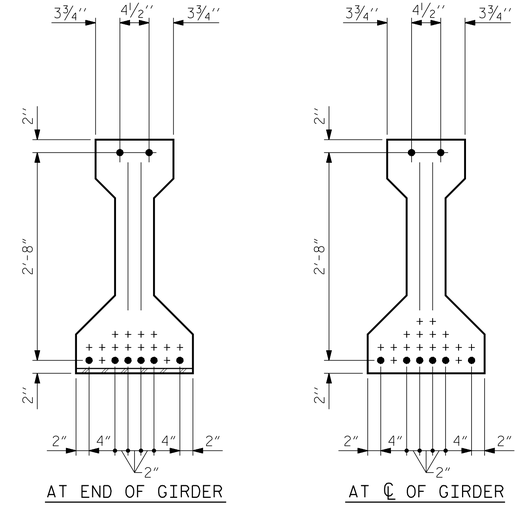

0.6" Ø LOW RELAXATION STRAND LAYOUT

(8 STRANDS, ALL STRAIGHT)

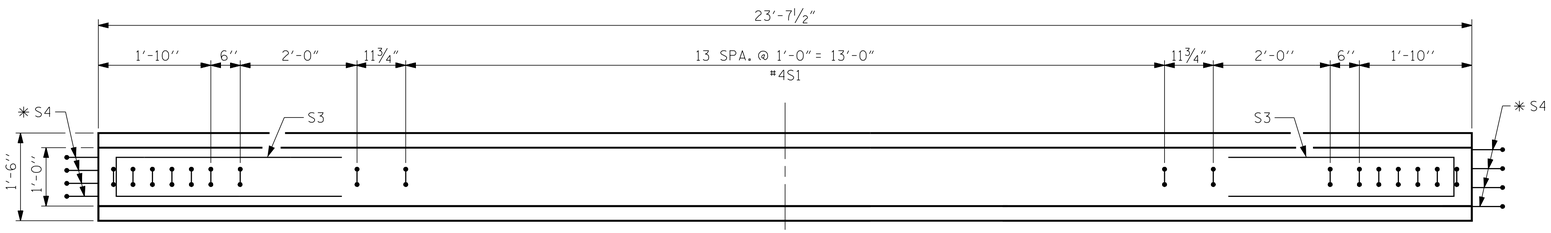

PLAN OF GIRDER

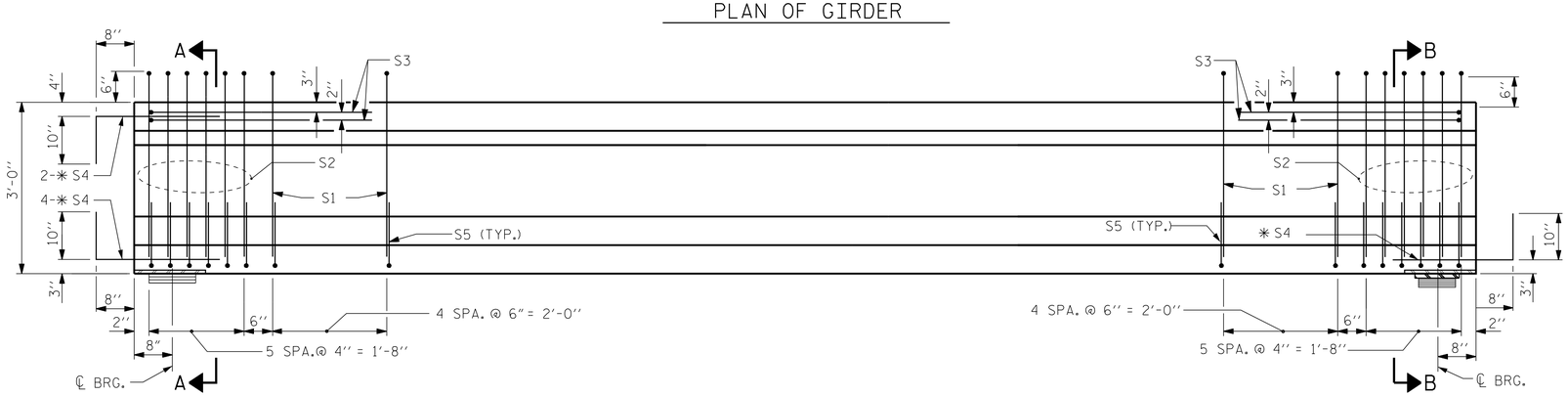

INTEGRAL END BENT

ELEVATION OF GIRDER

(SEE PARTIAL ELEVATION FOR ADDITIONAL "S" BARS)

CONTINUOUS BENT DIAPHRAGM BENT

0.6" Ø L. R. GRADE 270 STRANDS

AREA (SQUARE INCHES)	ULTIMATE STRENGTH (LBS. PER STRAND)	APPLIED PRESTRESS (LBS. PER STRAND)
0.217	58,600	43,950

REINFORCING STEEL FOR ONE GIRDER

BAR	NUMBER	SIZE	TYPE	LENGTH	WEIGHT
S1	24	#4	1	6'-10"	110
S2	12	#5	1	6'-10"	86
S3	4	#4	3	8'-8"	23
✳ S4	10	#5	STR	3'-8"	38
S5	44	#4	2	2'-4"	69
S6	1	#4	3	9'-2"	6

✳ NOTE: S4 BARS SHALL BE BENT BEFORE SHIPMENT. HEAT BENDING SHALL NOT BE ALLOWED.

BAR TYPES

ALL BAR DIMENSIONS ARE OUT-TO-OUT

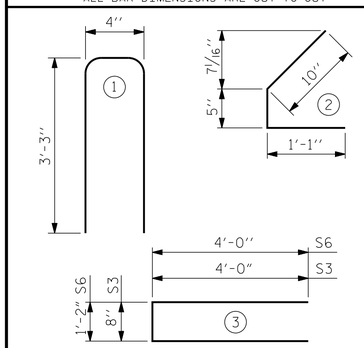

QUANTITIES FOR ONE GIRDER

REINF. STEEL	5000 PSI CONCRETE	0.6"Ø L.R. STRANDS
LBS.	C.Y.	NO.
332	2.3	8

GIRDERS REQUIRED

NUMBER	LENGTH	TOTAL LENGTH
14	23'-7½"	330'-9"

FOR PRESTRESSED GIRDER NOTES, SEE SHEET 3 OF 4.

PROJECT NO. 17BP.7.R.37

GUILFORD COUNTY

STATION: 15+47.50 -L-

SHEET 1 OF 4 REPLACES BRIDGE #400238

NORTH CAROLINA PROFESSIONAL SEAL 12186 ENGINEER CECIL L. NARRON 6/18/14

Kimley-Horn and Associates, Inc.
333 Fayetteville Street, Suite 600
Raleigh, NC 27601-1772
Phone (919) 835-1494
NC LICENSE # F-0102

This document, together with the concepts and designs presented herein, as an instrument of services, is intended only for the specific purpose and client for which it was prepared. Reuse of and improper reliance of this document without written consent by Kimley-Horn and Associates, Inc. shall be without liability to Kimley-Horn and Associates, Inc.

Copyright Kimley-Horn and Associates, Inc., 2013

STATE OF NORTH CAROLINA
DEPARTMENT OF TRANSPORTATION
RALEIGH

STANDARD

AASHTO TYPE II PRESTRESSED CONCRETE GIRDER CONTINUOUS FOR LIVE LOAD SPAN A & C

REVISIONS						SHEET NO.
NO.	BY:	DATE:	NO.	BY:	DATE:	S-11
1			3			TOTAL SHEETS
2			4			32

STD. NO. PCG4

DRAWN BY : ELR 8/91	REV. 10/17/00R	RWW/LES	
CHECKED BY : GRP 8/91	REV. 5/1/06R	TLA/GM	
	REV. 10/1/11	MAA/GM	
DRAWN BY: CRA	DATE: 6/14		
CHECKED BY: JCW	DATE: 6/14		

6/18/2014 K:\RDT_Structures_Bridge\NC\17BP Bridges - Group E\01103619_BR400238 - girder\Cad\dgn\S-11 - AASHTO Type II Girder.dgn

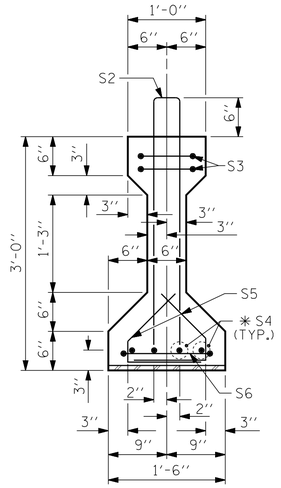

SECTION A-A

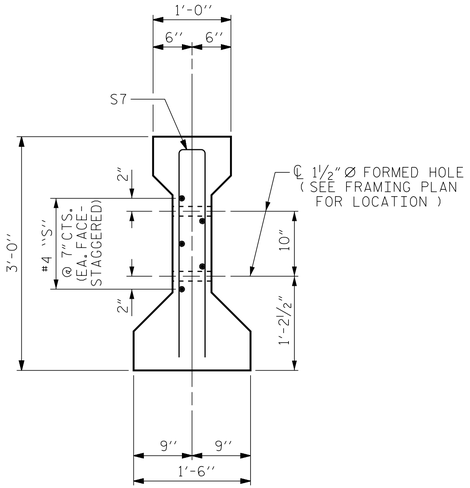

SECTION C-C

(S1 BARS NOT SHOWN)

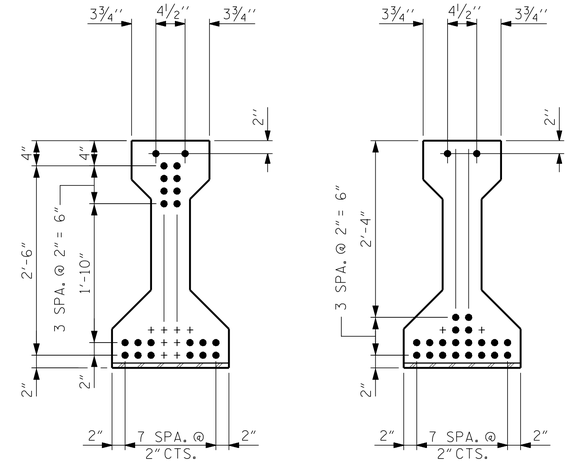

AT END OF GIRDER

AT ℄ OF GIRDER

0.6" Ø LOW RELAXATION STRAND LAYOUT

(22 STRANDS, 14 STRAIGHT, 8 DRAPED)

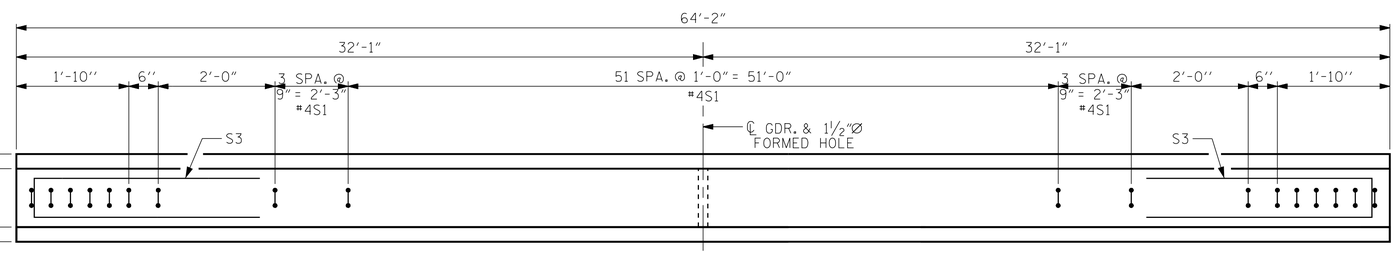

PLAN OF GIRDER

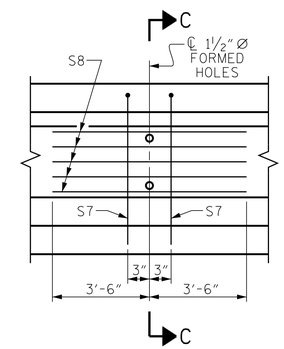

PARTIAL ELEVATION

(SHOWING INTERMEDIATE DIAPHRAGM REINFORCING STEEL FOR ALL GIRDERS)

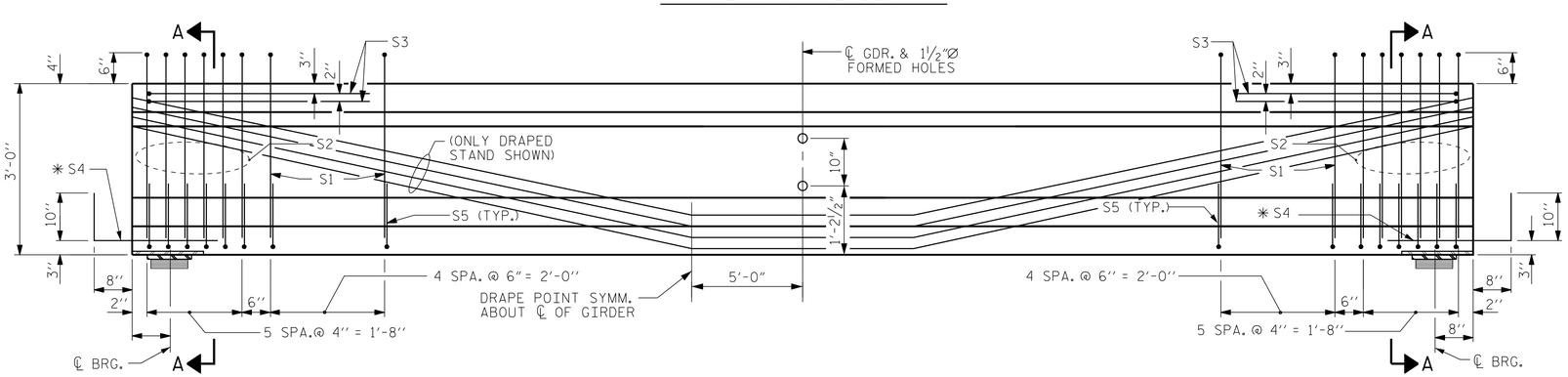

CONTINUOUS BENT DIAPHRAGM

BENT 1

ELEVATION OF GIRDER

(SEE PARTIAL ELEVATION FOR ADDITIONAL "S" BARS)

CONTINUOUS BENT DIAPHRAGM

BENT 2

0.6" Ø L. R. GRADE 270 STRANDS

AREA (SQUARE INCHES)	ULTIMATE STRENGTH (LBS. PER STRAND)	APPLIED PRESTRESS (LBS. PER STRAND)
0.217	58,600	43,950

REINFORCING STEEL FOR ONE GIRDER

BAR	NUMBER	SIZE	TYPE	LENGTH	WEIGHT
S1	66	#4	1	6'-10"	301
S2	12	#5	1	6'-10"	86
S3	4	#4	3	8'-8"	23
✳S4	8	#5	STR	3'-8"	31
S5	44	#4	2	2'-4"	69
S6	2	#4	3	9'-2"	12
S7	2	#5	3	5'-8"	12
S8	5	#4	STR	7'-0"	23

✳NOTE: S4 BARS SHALL BE BENT BEFORE SHIPMENT. HEAT BENDING SHALL NOT BE ALLOWED.

BAR TYPES

ALL BAR DIMENSIONS ARE OUT-TO-OUT

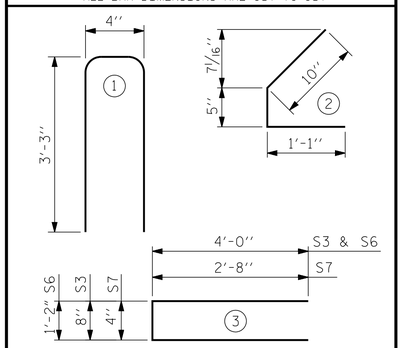

QUANTITIES FOR ONE GIRDER

REINF. STEEL	8000 PSI CONCRETE	0.6"Ø L.R. STRANDS
LBS.	C.Y.	NO.
557	6.1	22

GIRDERS REQUIRED

NUMBER	LENGTH	TOTAL LENGTH
7	64'-2"	449'-2"

FOR PRESTRESSED GIRDER NOTES, SEE SHEET 3 OF 4.

PROJECT NO. 17BP.7.R.37

GUILFORD COUNTY

STATION: 15+47.50 -L-

SHEET 2 OF 4 REPLACES BRIDGE #400238

NORTH CAROLINA PROFESSIONAL SEAL 12186 ENGINEER CECIL L. NARRON

6/16/14

Kimley-Horn and Associates, Inc.
333 Fayetteville Street, Suite 600
Raleigh, NC 27601-1772
Phone (919) 835-1494
NC LICENSE # F-0102

This document, together with the concepts and designs presented herein, as an instrument of services, is intended only for the specific purpose and client for which it was prepared. Reuse of and improper reliance of this document without written authorization and adaption by Kimley-Horn and Associates, Inc. shall be without liability to Kimley-Horn and Associates, Inc.

Copyright Kimley-Horn and Associates, Inc., 2013

STATE OF NORTH CAROLINA
DEPARTMENT OF TRANSPORTATION
RALEIGH

STANDARD

AASHTO TYPE II PRESTRESSED CONCRETE GIRDER CONTINUOUS FOR LIVE LOAD SPAN B

REVISIONS						SHEET NO.
NO.	BY:	DATE:	NO.	BY:	DATE:	S-12
1			3			TOTAL SHEETS
2			4			32

STD. NO. PCG4

DRAWN BY : ELR 8/91	REV. 10/17/00R RWW/LES		
CHECKED BY : GRP 8/91	REV. 5/1/06R TLA/GM		
	REV. 10/1/11 MAA/GM		
DRAWN BY: CRA	DATE: 6/14		
CHECKED BY: JCW	DATE: 6/14		

6/18/2014 K:\RDT_Structures\Bridge\NC\17BP Bridges - Group EV01\036189_BR400238 - girder\Cad\dgn\S-12 - AASHTO Type II Girder.dgn

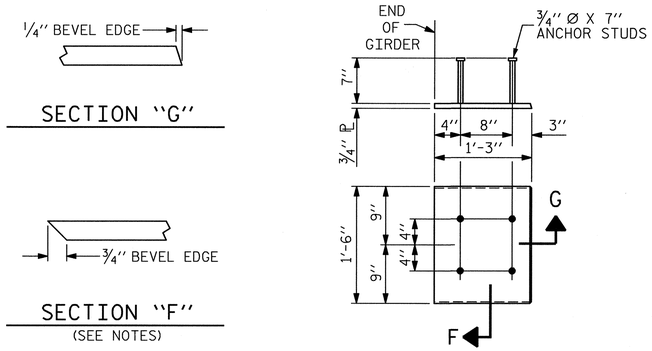

EMBEDDED PLATE "B-1" DETAILS FOR AASHTO TYPE II GIRDER

(2 REQ'D PER GIRDER)

NOTES

ALL PRESTRESSING STRANDS SHALL BE 7-WIRE LOW-RELAXATION GRADE 270 STRANDS AND SHALL CONFORM TO AASHTO M203 EXCEPT FOR SAMPLING REQUIREMENTS WHICH SHALL BE IN ACCORDANCE WITH THE STANDARD SPECIFICATIONS.

ALL REINFORCING STEEL SHALL BE GRADE 60.

EMBEDDED PLATE "B-1" SHALL BE GALVANIZED IN ACCORDANCE WITH THE STANDARD SPECIFICATIONS. BEVEL EDGES OF PLATE "B-1" TO GIVE CLOSE FIT BUT NOT TIGHT FIT TO STEEL CASTING FORM.

ANCHOR STUDS SHALL CONFORM TO AASHTO M169 GRADES 1010 THROUGH 1020 OR APPROVED EQUAL, AND SHALL MEET THE TYPE "B" REQUIREMENTS OF SUBSECTION 7.3 OF THE ANSI/AASHTO/AWS D1.5 BRIDGE WELDING CODE.

AT ENDS OF GIRDERS TO BE EMBEDDED IN CONCRETE DIAPHRAGMS OR END WALLS, PRESTRESSING STRANDS MAY EXTEND A MAXIMUM OF 2" BEYOND THE GIRDER ENDS.

THE TRANSFER OF LOAD FROM THE ANCHORAGES TO THE GIRDER SHALL BE DONE WHEN CONCRETE HAS REACHED A COMPRESSIVE STRENGTH OF NOT LESS THAN 4,000 PSI FOR SPANS A & C, AND 7,000 PSI FOR SPAN B.

DEPENDING ON THE TYPE OF SYSTEM USED TO SUPPORT THE DECK SLAB FORMS, PRESET ANCHORS MAY BE NECESSARY IN THE PRESTRESSED CONCRETE GIRDER.

THE TOP SURFACE OF THE GIRDER, EXCLUDING THE OUTSIDE 4", SHALL BE RAKED TO A DEPTH OF 1/4".

WHEN DRAPED STRANDS ARE DETAILED, THE LONGITUDINAL LOCATION OF THE HOLD DOWN DEVICES SHALL BE WITHIN 6" OF THE LOCATION SHOWN AND THE CENTER OF GRAVITY OF THE GROUP OF DRAPED STRANDS SHALL BE LOCATED WITHIN 1/2" OF THE THEORETICAL LOCATION SHOWN.

THE UPLIFT FORCE DUE TO DRAPED STANDS IS 26.1 KIPS.

DEAD LOAD DEFLECTION TABLE FOR GIRDERS

	SPAN A & C																					
0.6"Ø LOW RELAXATION	GIRDERS A1, A7 & C1, C7											GIRDERS A2-A6, C2-C6										
TENTH POINT	BRG	0.1	0.2	0.3	0.4	0.5	0.6	0.7	0.8	0.9	BRG	BRG	0.1	0.2	0.3	0.4	0.5	0.6	0.7	0.8	0.9	BRG
CAMBER (GIRDER ALONG IN PLACE) ↑	0	0.005	0.008	0.011	0.012	0.013	0.012	0.011	0.008	0.005	0	0	0.005	0.008	0.011	0.012	0.013	0.012	0.011	0.008	0.005	0
✳ DEFLECTION DUE TO SUPERIMPOSED D.L. ↓	0	0.001	0.001	0.002	0.002	0.002	0.002	0.002	0.001	0.001	0	0	0.001	0.001	0.002	0.002	0.002	0.002	0.002	0.001	0.001	0
FINAL CAMBER ↑	0"	1/16"	1/16"	1/8"	1/8"	1/8"	1/8"	1/8"	1/16"	1/16"	0"	0"	1/16"	1/16"	1/8"	1/8"	1/8"	1/8"	1/8"	1/16"	1/16"	0"

✳ INCLUDES FUTURE WEARING SURFACE
ALL VALUES ARE SHOWN IN FEET (DECIMAL FORM), EXCEPT "FINAL CAMBER", WHICH IS GIVEN IN INCHES (FRACTION FORM).

DEAD LOAD DEFLECTION TABLE FOR GIRDERS

	SPAN B																					
0.6"Ø LOW RELAXATION	GIRDERS B1 & B7											GIRDERS B2-B6										
TENTH POINT	BRG	0.1	0.2	0.3	0.4	0.5	0.6	0.7	0.8	0.9	BRG	BRG	0.1	0.2	0.3	0.4	0.5	0.6	0.7	0.8	0.9	BRG
CAMBER (GIRDER ALONG IN PLACE) ↑	0	0.054	0.104	0.145	0.173	0.183	0.173	0.145	0.104	0.054	0	0	0.054	0.104	0.145	0.173	0.183	0.173	0.145	0.104	0.054	0
✳ DEFLECTION DUE TO SUPERIMPOSED D.L. ↓	0	0.030	0.060	0.084	0.099	0.104	0.099	0.084	0.060	0.030	0	0	0.035	0.070	0.097	0.114	0.120	0.114	0.097	0.070	0.035	0
FINAL CAMBER ↑	0"	5/16"	1/2"	3/4"	7/8"	15/16"	7/8"	3/4"	1/2"	5/16"	0"	0"	1/4"	7/16"	9/16"	11/16"	3/4"	11/16"	9/16"	7/16"	1/4"	0"

✳ INCLUDES FUTURE WEARING SURFACE
ALL VALUES ARE SHOWN IN FEET (DECIMAL FORM), EXCEPT "FINAL CAMBER", WHICH IS GIVEN IN INCHES (FRACTION FORM).

PROJECT NO. 17BP.7.R.37
GUILFORD COUNTY
STATION: 15+47.50 -L-

SHEET 3 OF 4 REPLACES BRIDGE #400238

NORTH CAROLINA PROFESSIONAL SEAL 12186 ENGINEER CECIL L. NARRON 6/26/13

Kimley-Horn and Associates, Inc.
333 Fayetteville Street, Suite 600
Raleigh, NC 27601-1772
Phone (919) 835-1494
NC LICENSE # F-0102

This document, together with the concepts and designs presented herein, as an instrument of service, is intended only for the specific purpose and client for which it was prepared. Reuse of and improper reliance on this document without written authorization and adoption by Kimley-Horn and Associates, Inc. shall be without liability to Kimley-Horn and Associates, Inc.
Copyright Kimley-Horn and Associates, Inc., 2013

STATE OF NORTH CAROLINA
DEPARTMENT OF TRANSPORTATION
RALEIGH

STANDARD
PRESTRESSED CONCRETE GIRDER CONTINUOUS FOR LIVE LOAD DETAILS

REVISIONS								SHEET NO.
NO.	BY:	DATE:	NO.	BY:	DATE:			S-13
1			3					TOTAL SHEETS
2			4					32

STD. NO. PCG9

DRAWN BY : ELR 11/91	REV. 7/10/01	RR LES/RDR
CHECKED BY : GRP 11/91	REV. 5/1/06	TLA/GM
	REV. 10/1/11	MAA/GM

DRAWN BY: CRA DATE: 6/13
CHECKED BY: JCW DATE: 6/13

6/26/2013 K:\RDT_Structures_Bridge\NC\17BP Bridges - Group E\01103618\9_BR400238 - girder\Cad\dgn\S-13 - Prestressed Conc Girder.dgn

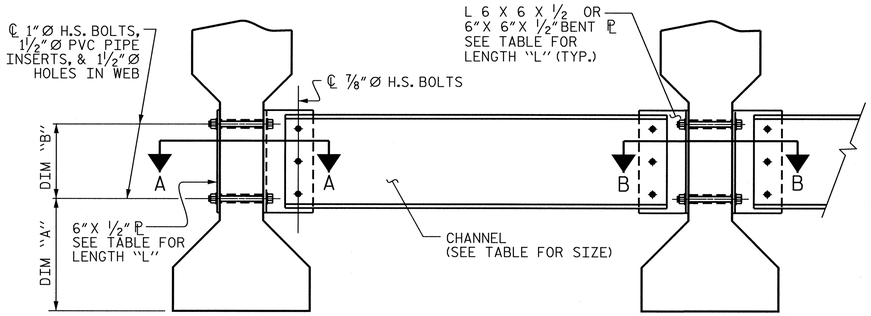

PART SECTION AT INTERMEDIATE DIAPHRAGM

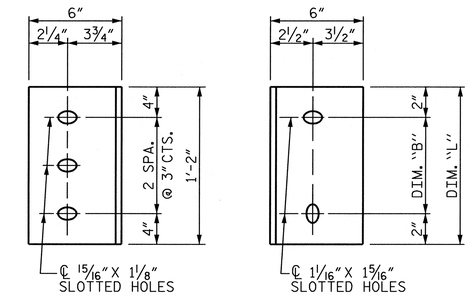

DIAPHRAGM FACE
(TYPE II GDR.)

WEB FACE

CONNECTOR PLATE DETAILS

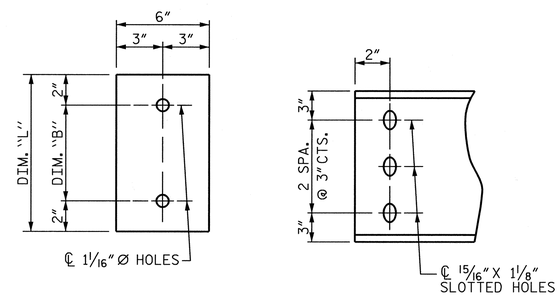

PLATE DETAILS

CHANNEL END
(TYPE II GDR.)

STRUCTURAL STEEL NOTES

ALL INTERMEDIATE DIAPHRAGM STEEL AND CONNECTOR PLATES SHALL BE AASHTO M270 GRADE 50 OR APPROVED EQUAL.

TENSION ON THE ASTM A325 BOLTS THROUGH THE CHANNEL MEMBER SHALL BE CALIBRATED USING DIRECT TENSION INDICATOR WASHERS IN ACCORDANCE WITH THE STANDARD SPECIFICATIONS.

TENSION ON THE ASTM A449 BOLTS THROUGH THE GIRDER WEB SHALL BE SNUG TIGHTENED FOLLOWED BY AN ADDITIONAL ¼ TURN.

THE PLATES, BENT PLATES, CHANNELS, AND ANGLES SHALL BE GALVANIZED OR METALLIZED IN ACCORDANCE WITH THE STANDARD SPECIFICATIONS. FOR THERMAL SPRAYED COATINGS (METALLIZATION), SEE SPECIAL PROVISIONS.

FOR METALLIZATION, APPLY AN 8 MIL THICK 99.99 PERCENT ZINC (W-Zn-1) THERMAL SPRAYED COATING WITH A 0.5 MIL THICK SEAL COAT TO ALL STEEL DIAPHRAGM SURFACES IN ACCORDANCE WITH THE THERMAL SPRAYED COATINGS SPECIAL PROVISION AND SECTION 442 OF THE STANDARD SPECIFICATIONS.

GALVANIZE THE HIGH STRENGTH BOLTS, NUTS, WASHERS AND DIRECT TENSION INDICATORS IN ACCORDANCE WITH THE STANDARD SPECIFICATIONS.

USE AN ASTM F436 HARDENED WASHER WITH STANDARD AND SLOTTED HOLES UNDER EACH BOLT HEAD AND NUT.

FOR BOLTS THROUGH THE GIRDER WEB, PROVIDE SUFFICIENT LENGTH OF THREADS ON ALL BOLTS TO ACCOMMODATE WASHERS AND THE THICKNESS OF CONNECTING MEMBER PLUS AT LEAST ¼" PROJECTION BEYOND THE NUT.

INTERMEDIATE DIAPHRAGM ASSEMBLY SHALL COMPLY WITH SECTION 1072 OF THE STANDARD SPECIFICATIONS.

SUBMIT TWO SETS OF WORKING DRAWINGS FOR THE INTERMEDIATE DIAPHRAGM ASSEMBLY FOR REVIEW, COMMENTS AND ACCEPTANCE. AFTER REVIEW, COMMENTS, AND ACCEPTANCE, SUBMIT SEVEN SETS FOR DISTRIBUTION.

IN THE EXTERIOR BAYS, PLACE TEMPORARY STRUTS BETWEEN PRESTRESSED GIRDERS ADJACENT TO THE STEEL DIAPHRAGMS. STRUTS SHALL REMAIN IN PLACE 3 DAYS AFTER CONCRETE IS PLACED.

THE COST OF THE STEEL DIAPHRAGMS AND ASSEMBLIES SHALL BE INCLUDED IN THE UNIT PRICE BID FOR PRESTRESSED CONCRETE GIRDERS.

TABLE

GIRDER TYPE	CHANNEL SIZE	DIM "A"	DIM "B"	DIM "L"
II	MC 12 x 31	1'-2½"	10"	1'-2"

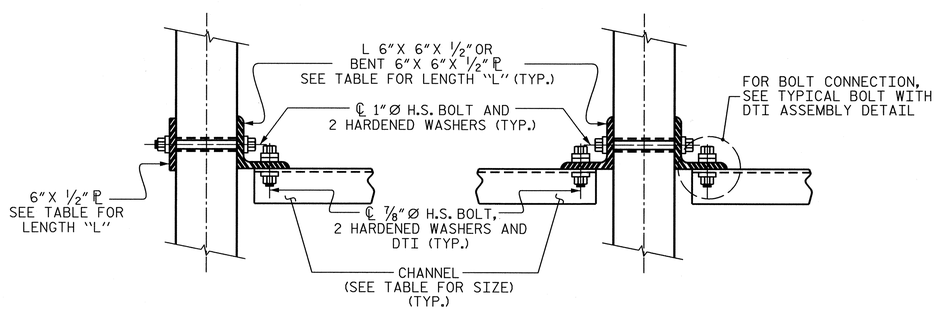

CONNECTION DETAILS

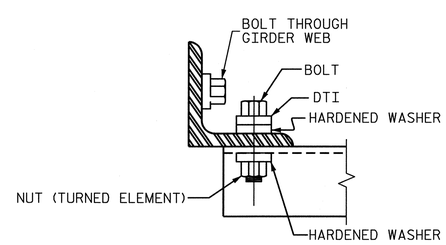

BOLT WITH DTI ASSEMBLY DETAIL

PROJECT NO. 17BP.7.R.37

GUILFORD COUNTY

STATION: 15+47.50 -L-

SHEET 4 OF 4 REPLACES BRIDGE #400238

STATE OF NORTH CAROLINA
DEPARTMENT OF TRANSPORTATION
RALEIGH

STANDARD

INTERMEDIATE STEEL DIAPHRAGMS FOR TYPE II PRESTRESSED CONCRETE GIRDERS

NORTH CAROLINA PROFESSIONAL SEAL 12186 ENGINEER CECIL L. NARRON 6/26/13

Kimley-Horn and Associates, Inc.
333 Fayetteville Street, Suite 600
Raleigh, NC 27601-1772
Phone (919) 835-1494
NC LICENSE # F-0102

This document, together with the concepts and designs presented herein, as an instrument of service, is intended only for the specific purpose and client for which it was prepared. Reuse of and improvements to Kimley-Horn and Associates, Inc. without written authorization and adaption by Kimley-Horn and Associates, Inc. shall be without liability to Kimley-Horn and Associates, Inc.
Copyright Kimley-Horn and Associates, Inc., 2013

REVISIONS						SHEET NO.
NO.	BY:	DATE:	NO.	BY:	DATE:	S-14
1			3			TOTAL SHEETS
2			4			32

STD. NO. PCG10

DRAWN BY : TLA 6/05	ADDED 10/21/05		
CHECKED BY : VC 6/05	REV. 5/1/06RRR	KMM/GM	
	REV. 10/1/11	MAA/GM	
DRAWN BY: CRA	DATE: 6/13		
CHECKED BY: JCW	DATE: 6/13		

6/26/2013

K:\RDT_Structures_Bridge\NC\17BP Bridges - Group EV01036189,BR400238 - girder\Cad\dgn\S-14 - Intermediate SteelDiaphragm.dgn

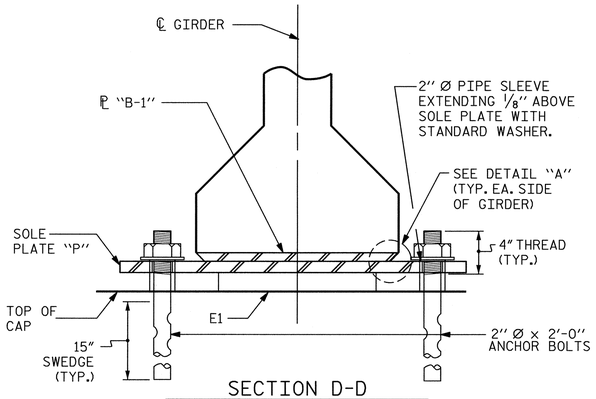

SECTION D-D

(AT BENT)

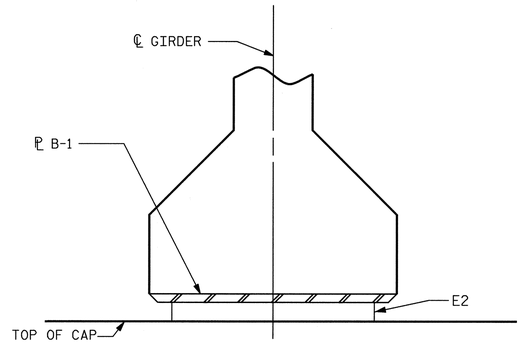

SECTION E-E

(AT INTEGRAL END BENT)

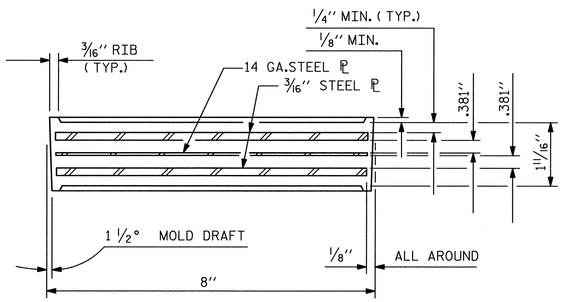

TYPICAL SECTION OF ELASTOMERIC BEARINGS

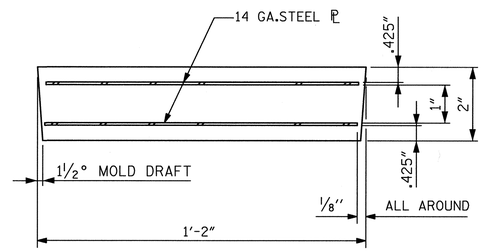

TYPICAL SECTION OF ELASTOMERIC BEARINGS

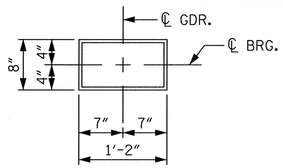

E1 (28 REQ'D)

PLAN VIEW OF ELASTOMERIC BEARING TYPE II

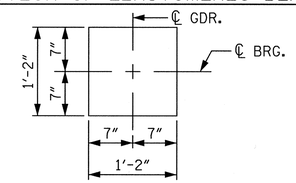

E2 (14 REQ'D)

PLAN VIEW OF ELASTOMERIC BEARING INTEGRAL BEARING PAD

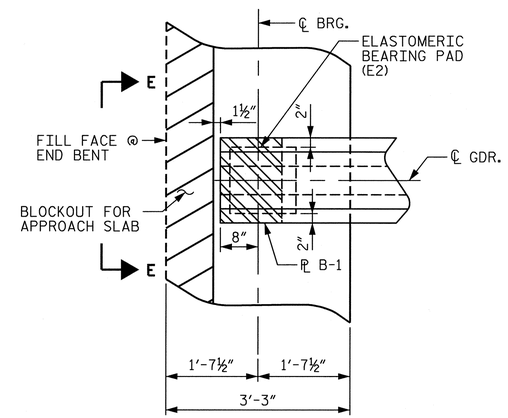

PLAN VIEW AT INTEGRAL END BENT

(END BENT 1 SHOWN, END BENT 2 SIMILAR.)

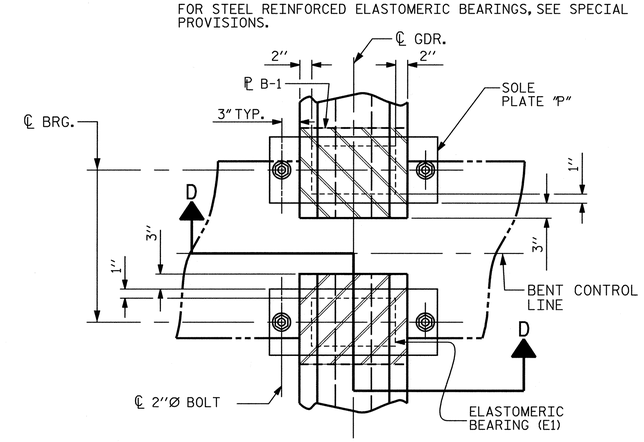

PLAN VIEW AT BENT

(SHOWING CONTINUOUS BENT)

NOTES

AT ALL FIXED POINTS OF SUPPORT, NUTS FOR ANCHOR BOLTS ARE TO BE TIGHTENED FINGER TIGHT AND THEN BACKED OFF 1/2 TURN. THE THREAD OF THE NUT AND BOLT SHALL THEN BE BURRED WITH A SHARP POINTED TOOL.

THE 2" Ø PIPE SLEEVE SHALL BE CUT FROM SCHEDULE 40 PVC PLASTIC PIPE. THE PVC PLASTIC PIPE SHALL MEET THE REQUIREMENTS OF ASTM D1785.

STEEL SOLE PLATES, ANCHOR BOLTS, NUTS, AND WASHERS SHALL BE GALVANIZED IN ACCORDANCE WITH THE STANDARD SPECIFICATIONS.

PRIOR TO WELDING, GRIND THE GALVANIZED SURFACE OF THE PORTION OF THE EMBEDDED PLATE AND SOLE PLATE THAT ARE TO BE WELDED. AFTER WELDING, DAMAGED GALVANIZED SURFACES SHALL BE REPAIRED IN ACCORDANCE WITH THE STANDARD SPECIFICATIONS.

WHEN WELDING THE SOLE PLATE TO THE EMBEDDED PLATE IN THE GIRDER, USE TEMPERATURE INDICATING WAX PENS, OR OTHER SUITABLE MEANS, TO ENSURE THAT THE TEMPERATURE OF THE SOLE PLATE DOES NOT EXCEED 300°F. TEMPERATURES ABOVE THIS MAY DAMAGE THE ELASTOMER.

SOLE PLATE "P", BOLTS, NUTS, WASHERS, AND PIPE SLEEVE SHALL BE INCLUDED IN THE PAY ITEM FOR PRESTRESSED CONCRETE GIRDERS.

ANCHOR BOLTS SHALL MEET THE REQUIREMENTS OF ASTM A449. NUTS SHALL MEET THE REQUIREMENTS OF AASHTO M291-DH OR AASHTO M292-2H. WASHERS SHALL MEET THE REQUIREMENTS OF AASHTO M293. SHOP DRAWINGS ARE NOT REQUIRED FOR ANCHOR BOLT, NUTS AND WASHERS. SHOP INSPECTION IS REQUIRED.

ALL SURFACES OF BEARING PLATES SHALL BE SMOOTH AND STRAIGHT.

THE ELASTOMER IN THE STEEL REINFORCED BEARINGS SHALL HAVE A SHEAR MODULUS OF 0.160 KSI, IN ACCORDANCE WITH AASHTO M251.

FOR STEEL REINFORCED ELASTOMERIC BEARINGS, SEE SPECIAL PROVISIONS.

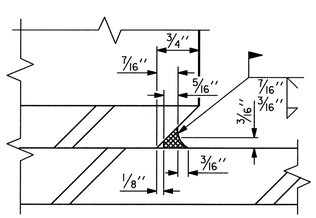

DETAIL "A"

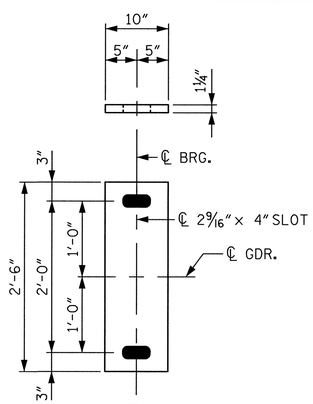

P1

(EXPANSION)

P1 (14 REQ'D)

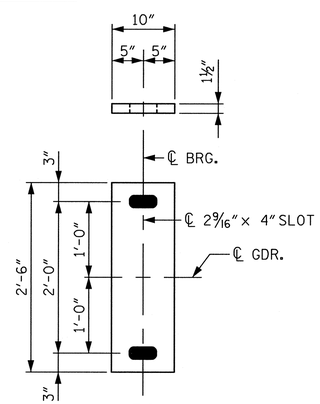

P2

(EXPANSION)

P2 (7 REQ'D)

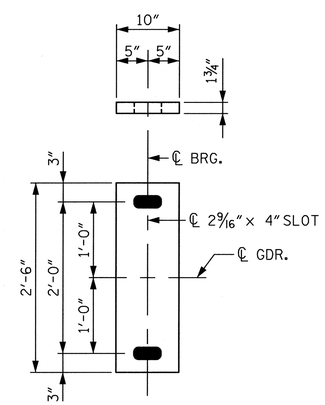

P3

(EXPANSION)

P3 (7 REQ'D)

SOLE PLATE DETAILS ("P")

LOAD RATINGS	
	MAX.D.L.+L.L.
TYPE II	125 K

PROJECT NO. 17BP.7.R.37

GUILFORD COUNTY

STATION: 15+47.50 -L-

REPLACES BRIDGE #400238

NORTH CAROLINA PROFESSIONAL SEAL 2186 ENGINEER CECIL L. NARRON 6/26/13

Kimley-Horn and Associates, Inc.
333 Fayetteville Street, Suite 600
Raleigh, NC 27601-1772
Phone (919) 835-1494
NC LICENSE # F-0102

This document, together with the concepts and designs presented herein, as an instrument of services, is intended only for the specific purpose and client for which it was prepared. Reuse of and improper reliance on this document without written authorization, and adaption by Kimley-Horn and Associates, Inc. shall be without liability to Kimley-Horn and Associates, Inc.

Copyright Kimley-Horn and Associates, Inc., 2013

STATE OF NORTH CAROLINA
DEPARTMENT OF TRANSPORTATION
RALEIGH

STANDARD

ELASTOMERIC BEARING DETAILS

PRESTRESSED CONCRETE GIRDER SUPERSTRUCTURE

REVISIONS							
NO.	BY:	DATE:	NO.	BY:	DATE:		
1			3				
2			4				

SHEET NO. S-15

TOTAL SHEETS 32

DRAWN BY : WJH 8/89	REV. 7/10/01	RWW/LES	
CHECKED BY : CRK 8/89	REV. 5/1/06	TLA/GM	
	REV. 10/1/11	MAA/GM	
DRAWN BY: CRA	DATE: 6/13		
CHECKED BY: JCW	DATE: 6/13		

STD. NO. EB3

K:\RDT-Structures_Bridges\NC\17BP Bridges - Group E\01036189_BR400238 - girder\Cad\dgn\S-15 - Elastomeric Bearing Details.dgn
6/26/2013

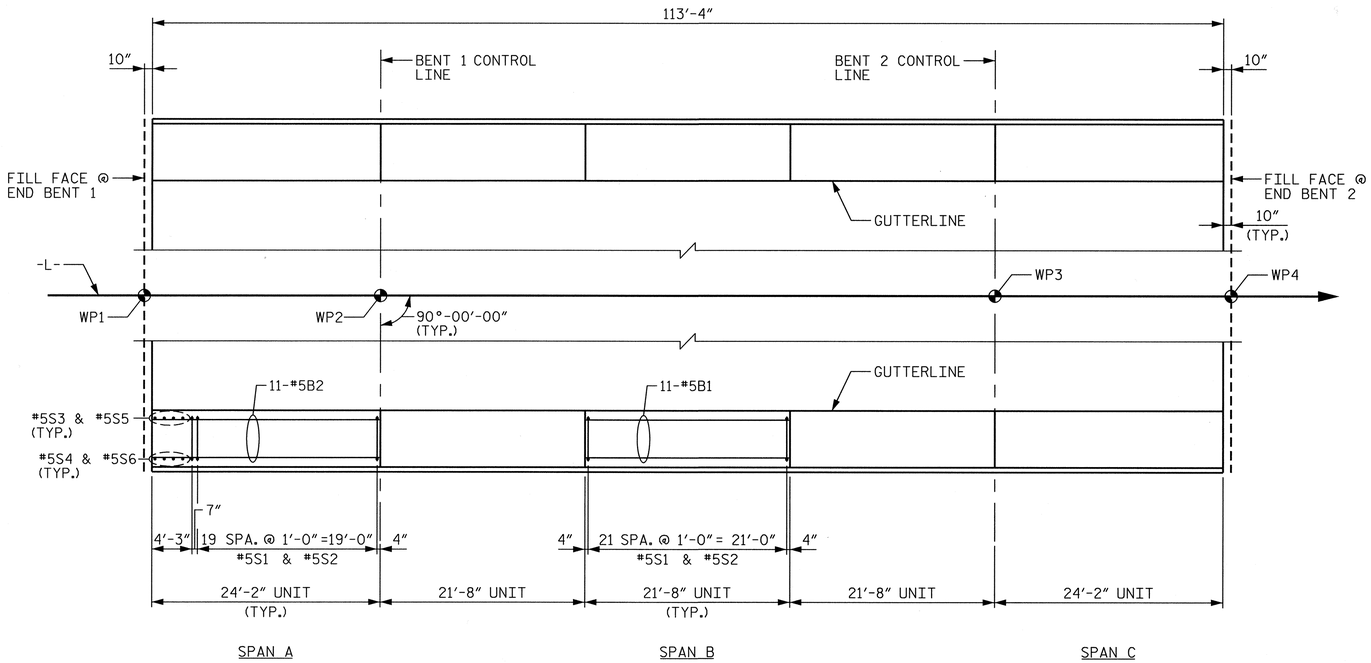

PLAN OF BARRIER RAIL

NOTES

THE BARRIER RAIL IN EACH SPAN SHALL NOT BE CAST UNTIL ALL SLAB CONCRETE IN THAT SPAN HAS BEEN CAST AND HAS REACHED A MINIMUM COMPRESSIVE STRENGTH OF 3,000 PSI.

ALL REINFORCING STEEL IN BARRIER RAILS SHALL BE EPOXY COATED.

THE #5 S3, S4, S5 AND S6 BARS SHALL BE INSTALLED, USING AN ADHESIVE ANCHORING SYSTEM, AFTER SAWING THE JOINT. THE YIELD LOAD FOR THE #5 S3, S4, S5 AND S6 BARS IS 18.6 KIPS. FIELD TESTING FOR THE ADHESIVE BONDING SYSTEM IS NOT REQUIRED.

GROOVED CONTRACTION JOINTS, 1/2" IN DEPTH, SHALL BE TOOLED IN ALL EXPOSED FACES OF THE BARRIER RAIL AND IN ACCORDANCE WITH ARTICLE 825-10(B) OF THE STANDARD SPECIFICATIONS. THE CONTRACTION JOINT SHALL BE LOCATED AT EACH THIRD POINT BETWEEN BARRIER RAIL EXPANSION JOINTS. ONLY ONE CONTRACTION JOINT IS REQUIRED AT MIDPOINT OF BARRIER RAIL SEGMENTS LESS THAN 20 FEET IN LENGTH AND NO CONTRACTION JOINTS ARE REQUIRED FOR THOSE SEGMENTS LESS THAN 10 FEET IN LENGTH.

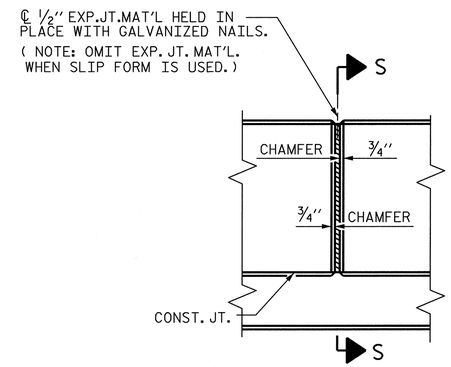

ELEVATION AT EXPANSION JOINTS

BAR TYPES

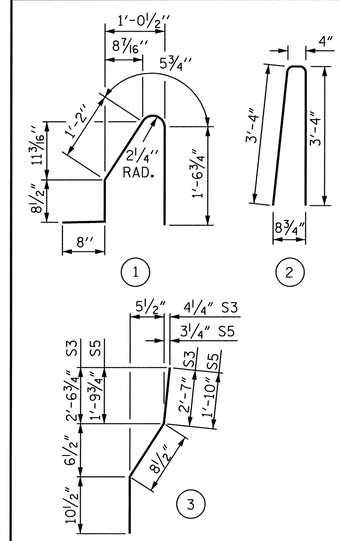

ALL BAR DIMENSIONS ARE OUT TO OUT

BILL OF MATERIAL

FOR CONCRETE BARRIER RAIL ONLY

BAR	NO.	SIZE	TYPE	LENGTH	WEIGHT
* B1	66	#5	STR	21'-4"	1,469
* B2	44	#5	STR	23'-10"	1,094
* S1	212	#5	1	4'-7"	1,013
* S2	212	#5	2	7'-0"	1,548
* S3	8	#5	3	4'-2"	35
* S4	8	#5	STR	4'-0"	33
* S5	8	#5	3	3'-5"	29
* S6	8	#5	STR	3'-3"	27

* EPOXY COATED REINFORCING STEEL	5,247 LBS.
CLASS AA CONCRETE	30.8 CU. YDS.
CONCRETE BARRIER RAIL	226.67 LIN. FT.

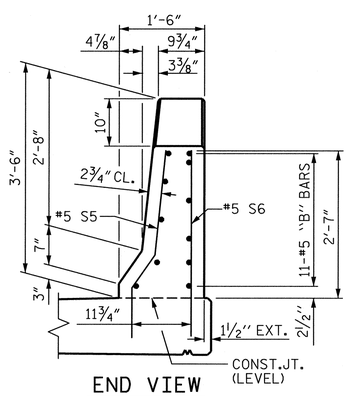

END VIEW

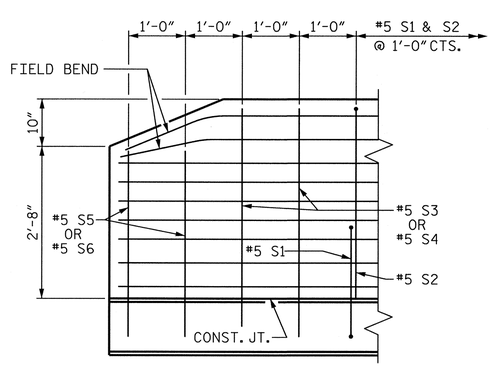

SIDE VIEW

END OF RAIL DETAILS

(FOR ADHESIVE ANCHORING AT SAWED JOINTS)

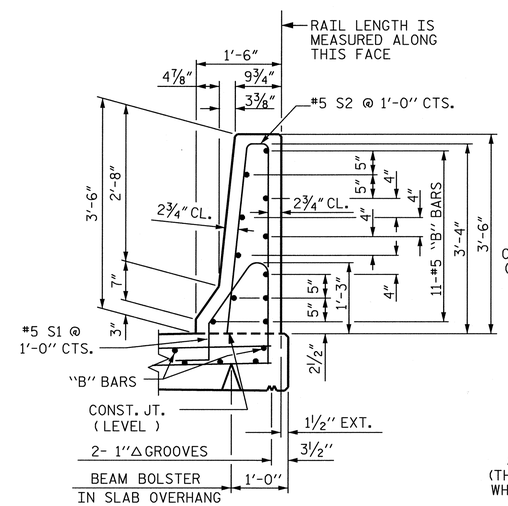

SECTION THRU RAIL

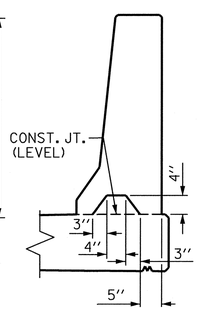

SECTION S-S

AT DAM IN OPEN JOINT (THIS IS TO BE USED ONLY WHEN SLIP FORM IS USED)

BARRIER RAIL DETAILS

PROJECT NO. 17BP.7.R.37

GUILFORD COUNTY

STATION: 15+47.50 -L-

SHEET 1 OF 2 REPLACES BRIDGE #400238

NORTH CAROLINA PROFESSIONAL SEAL 2186 ENGINEER CECIL L. NARRON 6/26/13

STATE OF NORTH CAROLINA
DEPARTMENT OF TRANSPORTATION
RALEIGH

STANDARD

CONCRETE BARRIER RAIL

Kimley-Horn and Associates, Inc.
333 Fayetteville Street, Suite 600
Raleigh, NC 27601-1772
Phone (919) 835-1494
NC LICENSE # F-0102

This document, together with the concepts and designs presented herein, as an instrument of service, is intended only for the specific purpose and client for which it was prepared. Reuse of and improper reliance on this document without written authorization and adaptation by Kimley-Horn and Associates, Inc. shall be without liability to Kimley-Horn and Associates, Inc.
Copyright Kimley-Horn and Associates, Inc., 2013

REVISIONS						
NO.	BY:	DATE:	NO.	BY:	DATE:	
1			3			
2			4			

SHEET NO. S-16

TOTAL SHEETS 32

DRAWN BY : ARB 5/87	REV. 10/1/11	MAA/GM	
CHECKED BY : SJD 9/87	REV. 7/12	MAA/GM	
	REV. 10/12	MAA/GM	
DRAWN BY: CRA	DATE: 6/13		
CHECKED BY: JCW	DATE: 6/13		

K:\RDT_Structures_Bridge\NC\17BP Bridges - Group EV01103618B_BR400238 - girder\Cad\dgn\S-16 - Concrete Barrier Rail.dgn
6/26/2013

STD. NO. CBR1

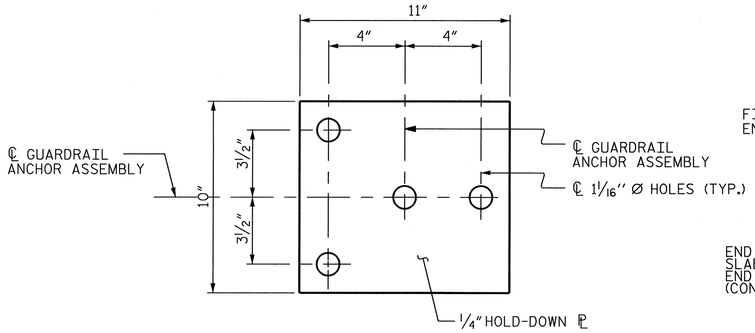

PLAN

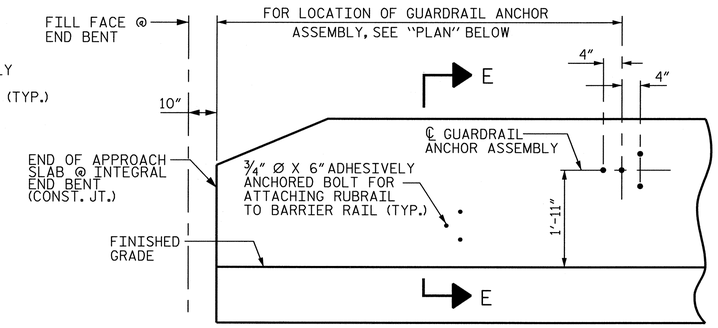

ELEVATION

(FOR LOCATION OF RUBRAIL, SEE ROADWAY STD. 862.03)

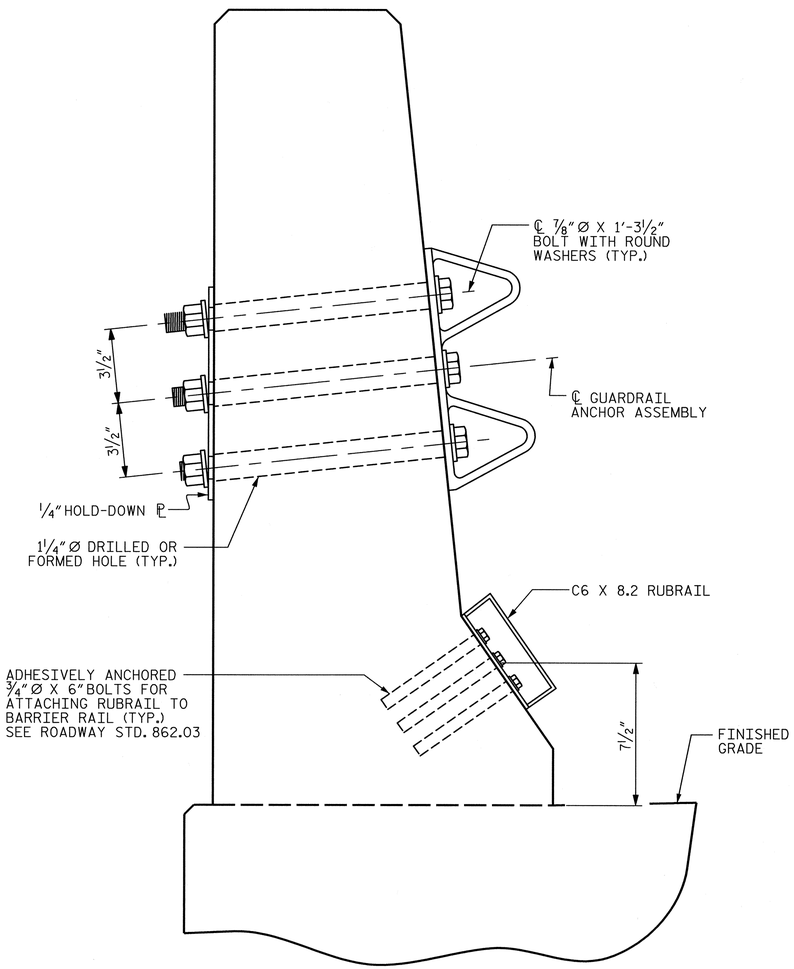

SECTION E-E

GUARDRAIL ANCHOR ASSEMBLY DETAILS

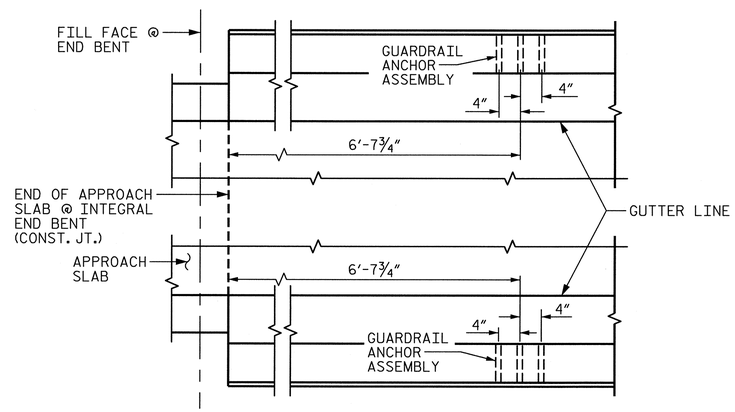

PLAN

LOCATION OF ANCHORS FOR GUARDRAIL

(END BENT 1 SHOWN, END BENT 2 SIMILAR.)

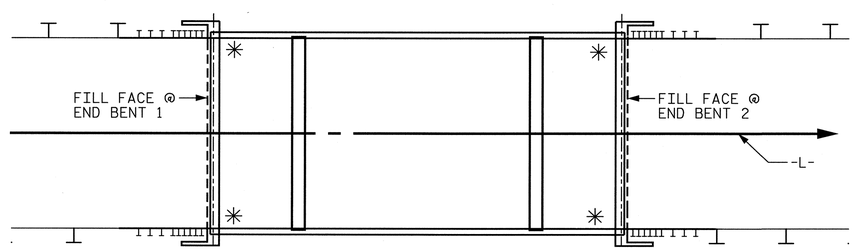

SKETCH SHOWING POINTS OF ATTACHMENTS

✳ DENOTES GUARDRAIL ANCHOR ASSEMBLY

NOTES

THE GUARDRAIL ANCHOR ASSEMBLY SHALL CONSIST OF A 1/4" HOLD-DOWN PLATE AND 4 - 7/8" Ø BOLTS WITH NUTS AND WASHERS, RUBRAIL, AND ADHESIVELY ANCHORED BOLTS.

THE HOLD-DOWN PLATE SHALL CONFORM TO AASHTO M270 GRADE 36. AFTER FABRICATION, THE HOLD-DOWN PLATE SHALL BE HOT-DIP GALVANIZED IN ACCORDANCE WITH AASHTO M111.

BOLTS SHALL CONFORM TO THE REQUIREMENTS OF ASTM A307 AND NUTS SHALL CONFORM TO THE REQUIREMENTS OF AASHTO M291. BOLTS, NUTS AND WASHERS SHALL BE GALVANIZED. (AT THE CONTRACTOR'S OPTION, STAINLESS STEEL BOLTS, NUTS AND WASHERS MAY BE USED AS AN ALTERNATE FOR THE 7/8" Ø GALVANIZED BOLTS, NUTS AND WASHERS. THEY SHALL CONFORM TO OR EXCEED THE MECHANICAL REQUIREMENTS OF ASTM A307. THE USE OF THIS ALTERNATE SHALL BE APPROVED BY THE ENGINEER.)

THE GUARDRAIL ANCHOR ASSEMBLY IS REQUIRED AT ALL POINTS WHERE APPROACH GUARDRAIL IS TO BE ATTACHED TO THE END OF BARRIER RAIL. FOR POINTS OF ATTACHMENT, SEE SKETCH.

AFTER INSTALLATION, THE EXPOSED THREAD OF THE BOLT SHALL BE BURRED WITH A SHARP POINTED TOOL.

THE COST OF THE GUARDRAIL ANCHOR ASSEMBLY SHALL BE INCLUDED IN THE UNIT CONTRACT PRICE BID FOR CONCRETE BARRIER RAIL.

THE 1 1/4" Ø HOLES SHALL BE FORMED OR DRILLED WITH A CORE BIT. IMPACT TOOLS WILL NOT BE PERMITTED. ANY CONCRETE DAMAGED BY THIS WORK SHALL BE REPAIRED TO THE SATISFACTION OF THE ENGINEER.

THE C6 X 8.2 RUBRAIL IS TO BE ADHESIVELY ANCHORED TO THE RAIL USING THREE 3/4" Ø X 6" BOLTS WITH WASHERS. LEVEL ONE FIELD TESTING IS REQUIRED, AND THE YIELD LOAD OF THE 3/4" Ø BOLT IS 12 KIPS. FOR ADHESIVELY ANCHORED ANCHOR BOLTS OR DOWELS, SEE STANDARD SPECIFICATIONS. SEE ROADWAY STANDARD 862.03 FOR DETAILS AND LOCATION OF THE RUBRAIL.

PROJECT NO. 17BP.7.R.37
GUILFORD COUNTY
STATION: 15+47.50 -L-

SHEET 2 OF 2 REPLACES BRIDGE #400238

STATE OF NORTH CAROLINA
DEPARTMENT OF TRANSPORTATION
RALEIGH

STANDARD

GUARDRAIL ANCHORAGE FOR BARRIER RAIL

NORTH CAROLINA PROFESSIONAL SEAL 12186 ENGINEER CECIL L. NARRONA 6/26/13

Kimley-Horn and Associates, Inc.
333 Fayetteville Street, Suite 600
Raleigh, NC 27601-1772
Phone (919) 835-1494
NC LICENSE # F-0102

This document, together with the concepts and designs presented herein, as an instrument of services, is intended only for the specific purpose and client for which it was prepared. Reuse of and improper reliance on this document without written authorization and adaption by Kimley-Horn and Associates, Inc. shall be without liability to Kimley-Horn and Associates, Inc.
Copyright Kimley-Horn and Associates, Inc., 2013

REVISIONS						
NO.	BY:	DATE:	NO.	BY:	DATE:	
1			3			
2			4			

SHEET NO. S-17
TOTAL SHEETS 32

STD. NO. GRA2

DRAWN BY : TLA 5/06	REV. 10/1/11	MAA/GM	
CHECKED BY : GM 5/06	REV. 7/12	MAA/GM	
	REV. 10/12	MAA/GM	
DRAWN BY: CRA	DATE: 6/13		
CHECKED BY: JCW	DATE: 6/13		

K:\RDT_Structures_Bridge\NC\TBP Bridges - Group E\01103689_BR400238 - girder\Cad\dgn\S-17 - Guardrail Anchorage for Barrier Rail.dgn
6/26/2013

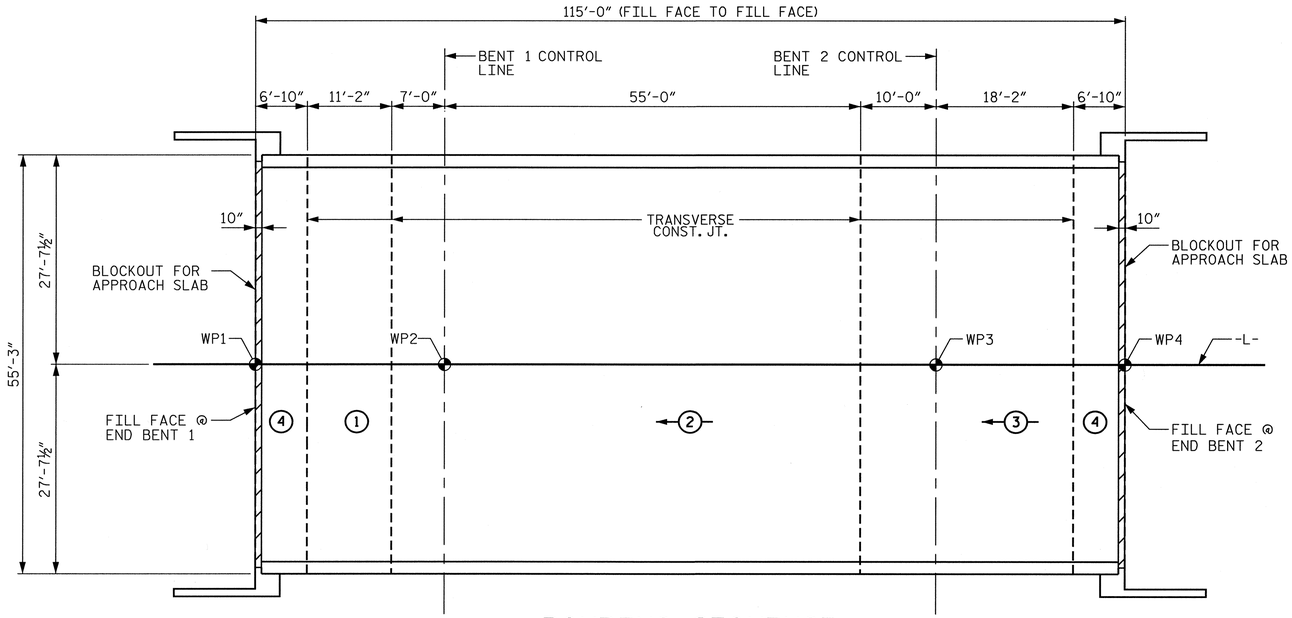

POURING SEQUENCE

(SEE TRANSVERSE CONSTRUCTION JOINT DETAIL.)

INDICATED POUR NUMBER AND DIRECTION

NOTE: THE UPPER PORTION OF THE WING SHALL BE POURED WITH THE SUPERSTRUCTURE.

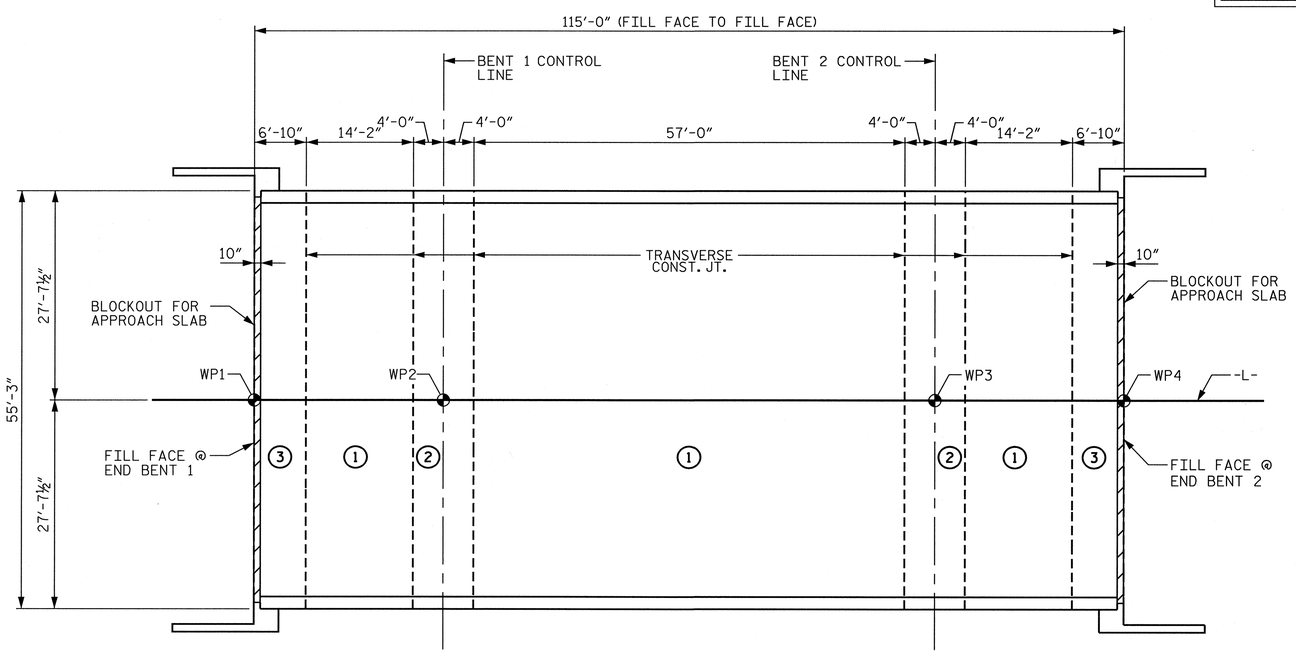

OPTIONAL POURING SEQUENCE

(SEE TRANSVERSE CONSTRUCTION JOINT DETAIL)
(POUR 2 CANNOT BE STARTED UNTIL BOTH ADJACENT POURS 1 REACH A MINIMUM OF 3,000 PSI.)

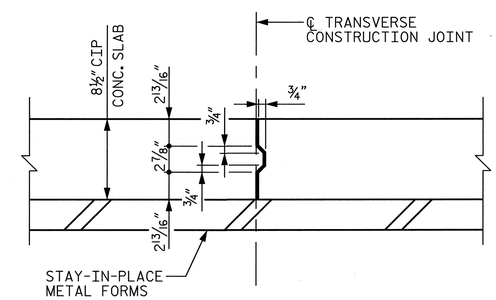

NOTE: REINFORCING STEEL IN SLAB NOT SHOWN. LONGITUDINAL STEEL SHALL BE CONTINUOUS THROUGH JOINT.

TRANSVERSE CONSTRUCTION JOINT

PROJECT NO. 17BP.7.R.37
GUILFORD COUNTY
STATION: 15+47.50 -L-

REPLACES BRIDGE #400238

NORTH CAROLINA PROFESSIONAL SEAL 12186 ENGINEER CECIL L. NARRON 6/26/13

STATE OF NORTH CAROLINA
DEPARTMENT OF TRANSPORTATION
RALEIGH

SUPERSTRUCTURE

POUR SEQUENCE

Kimley-Horn and Associates, Inc.
333 Fayetteville Street, Suite 600
Raleigh, NC 27601-1772
Phone (919) 835-1494
NC LICENSE # F-0102

This document, together with the concepts and designs presented herein, is an instrument of service, is intended only for the specific purpose and client for which it was prepared. Reuse of and improper reliance on this document, without written authorization and adaptation by Kimley-Horn and Associates, Inc. shall be without liability to Kimley-Horn and Associates, Inc.
Copyright Kimley-Horn and Associates, Inc., 2013

REVISIONS						
NO.	BY:	DATE:	NO.	BY:	DATE:	
1			3			
2			4			

SHEET NO. S-18
TOTAL SHEETS 32

DRAWN BY: CRA DATE: 6/13
CHECKED BY: JCW DATE: 6/13

6/26/2013 K:\RDT_Structures\Bridge\NC\17BP Bridges - Group E\01103689_BR400238 - girder\Cad\dgn\S-18 - Pour Sequence.dgn

SUPERSTRUCTURE REINFORCING STEEL LENGTHS ARE BASED ON THE FOLLOWING MINIMUM SPLICE LENGTHS					
BAR SIZE	SUPERSTRUCTURE EXCEPT APPROACH SLABS, PARAPET, AND BARRIER RAIL		APPROACH SLABS		PARAPET AND BARRIER RAIL
	EPOXY COATED	UNCOATED	EPOXY COATED	UNCOATED	
#4	2′-0″	1′-9″	2′-0″	1′-9″	2′-9″
#5	2′-6″	2′-2″	2′-6″	2′-2″	3′-5″
#6	3′-0″	2′-7″	3′-10″	2′-7″	4′-4″
#7	5′-3″	3′-6″			
#8	6′-10″	4′-7″			

BAR TYPES

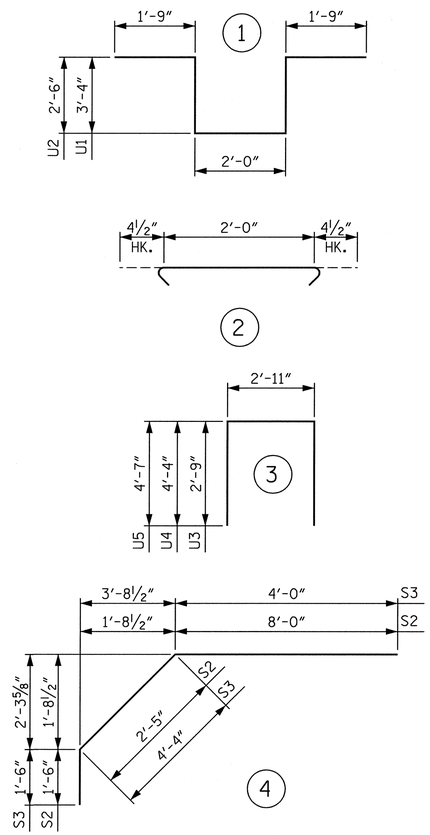

ALL BAR DIMENSIONS ARE OUT TO OUT

BILL OF MATERIAL

SUPERSTRUCTURE

BAR	NO.	SIZE	TYPE	LENGTH	WEIGHT
✱ A1	225	#5	STR	54′-11″	12888
A2	225	#5	STR	54′-11″	12888
✱ B1	150	#7	STR	5′-0″	1533
✱ B2	76	#7	STR	37′-0″	5748
✱ B3	74	#7	STR	13′-6″	2042
✱ B4	76	#4	STR	10′-7″	537
✱ B5	38	#4	STR	20′-0″	508
B6	132	#5	STR	57′-7″	7928
H1	48	#4	STR	9′-11″	318
K1	48	#4	STR	7′-4″	235
K2	24	#4	STR	5′-2″	83
K3	24	#4	STR	6′-10″	110
K4	16	#4	STR	26′-2″	280
K5	24	#4	STR	21′-6″	345
K6	24	#4	STR	7′-4″	118
K7	12	#4	STR	6′-4″	51
K8	12	#4	STR	6′-10″	55
K9	4	#4	STR	5′-0″	13
K10	8	#4	STR	5′-6″	29
K11	4	#4	STR	5′-3″	14
K12	16	#4	STR	3′-7″	38
S1	288	#4	2	2′-9″	529
✱ S2	88	#4	4	11′-11″	701
✱ S3	88	#4	4	9′-10″	578
U1	72	#4	1	12′-2″	585
U2	24	#4	1	10′-6″	168
U3	96	#4	3	8′-5″	540
U4	6	#4	3	11′-7″	46
U5	6	#4	3	12′-1″	48
V2	38	#4	STR	4′-4″	110
V3	38	#4	STR	4′-7″	116

SUPERSTRUCTURE BILL OF MATERIAL

	CLASS AA CONCRETE	REINFORCING STEEL	EPOXY COATED REINFORCING STEEL
	(CU. YDS.)	(LBS.)	(LBS.)
SPAN A & B	-	24,647	24,534
POUR #1	17.3	-	-
POUR #2	108.4	-	-
POUR #3	55.8	-	-
POUR #4	70.5	-	-
TOTALS✱✱	252.0	24,647	24,534

✱✱QUANTITIES FOR BARRIER RAIL ARE NOT INCLUDED

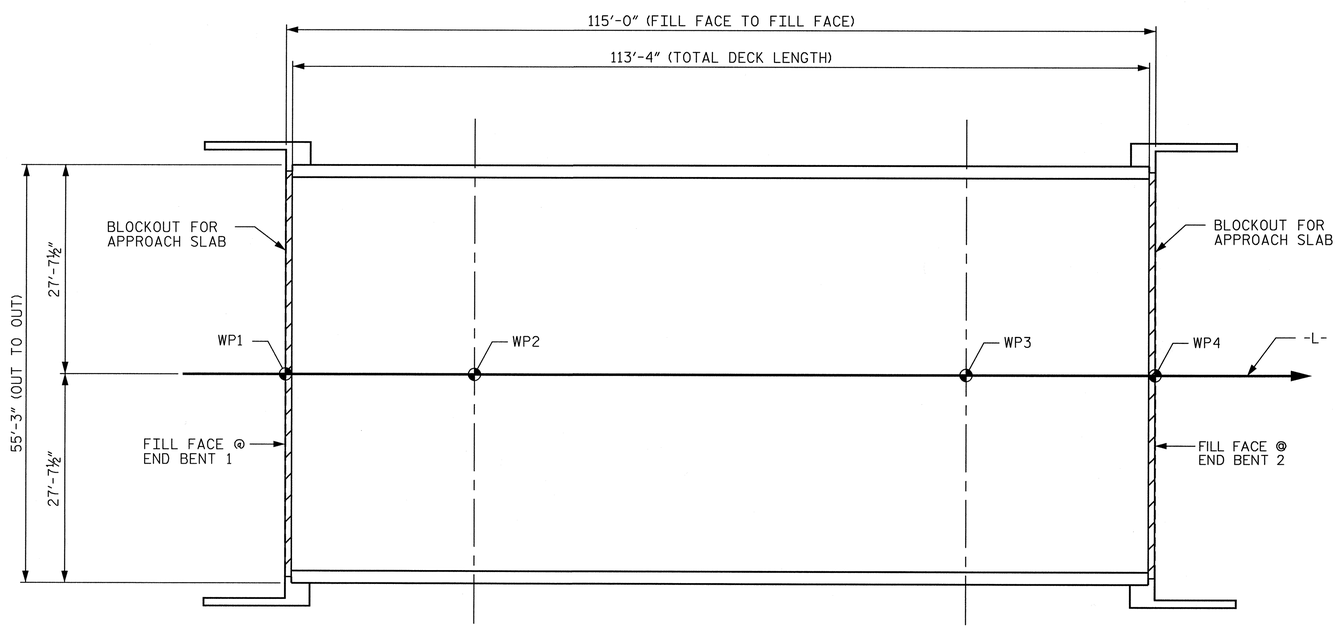

NOTE: THE COST OF THE UPPER PORTION OF THE WINGS AND INTEGRAL ENDS ABOVE THE CONSTRUCTION JOINT, AND THE BENT DIAPHRAGMS SHALL BE INCLUDED IN THE UNIT PRICE FOR REINFORCED CONCRETE DECK SLAB.

LAYOUT FOR COMPUTING AREA REINFORCED CONCRETE DECK SLAB (SQ. FT. = 6,262)

GROOVING BRIDGE FLOORS		
APPROACH SLABS	2,450	SQ.FT.
BRIDGE DECK	5,554	SQ.FT.
TOTAL	8,004	SQ.FT.

PROJECT NO. 17BP.7.R.37

GUILFORD COUNTY

STATION: 15+47.50 -L-

REPLACES BRIDGE #400238

NORTH CAROLINA PROFESSIONAL SEAL 12186 ENGINEER CECIL L. NARRONG 6/26/13

Kimley-Horn and Associates, Inc.
333 Fayetteville Street, Suite 600
Raleigh, NC 27601-1772
Phone (919) 835-1494
NC LICENSE # F-0102

This document, together with the concepts and designs presented herein, as an instrument of services, is intended only for the specific purpose and client for which it was prepared. Reuse of and improper reliance on this document without written authorization, and adaptation by Kimley-Horn and Associates, Inc. shall be without liability to Kimley-Horn and Associates, Inc.
Copyright Kimley-Horn and Associates, Inc., 2013

STATE OF NORTH CAROLINA
DEPARTMENT OF TRANSPORTATION
RALEIGH

STANDARD

SUPERSTRUCTURE BILL OF MATERIALS

REVISIONS							
NO.	BY:	DATE:	NO.	BY:	DATE:	SHEET NO.	
1			3			S-19	
2			4			TOTAL SHEETS	32

STD. NO. BOM2

DRAWN BY : JMB 5/87	REV. 8/16/99	RWW/LES	
CHECKED BY : SJD 9/87	REV. 5/1/06	TLA/GM	
	REV. 10/1/11	MAA/GM	
DRAWN BY: CRA	DATE: 6/13		
CHECKED BY: JCW	DATE: 6/13		

6/26/2013
K:\RDT_Structures_Bridge\NC\17BP Bridges - Group E\01036189_BR400238 - girder\Cad\dgn\S-19 - Bill of Materials.dgn

NOTES

FOR PILE SPLICE DETAILS, SEE SHEET 3 OF 3.

THE CONTRACTOR SHALL PROVIDE FOR INSTALLATION OF THE 4" DIAMETER DRAIN PIPE THROUGH THE WING WALL AS REQUIRED FOR REINFORCED BRIDGE APPROACH FILLS. SEE ROADWAY PLANS. REINFORCING STEEL IN THE WING WALL MAY BE SHIFTED AS NECESSARY TO CLEAR THE DRAIN PIPE.

SEE SUPERSTRUCTURE SHEETS FOR UPPER PORTION OF INTEGRAL END BENT DETAILS.

THE TOP SURFACE OF THE END BENT CAP AND WINGS, EXCEPT THE BEARING AREA, SHALL BE RAKED TO A DEPTH OF 1/4".

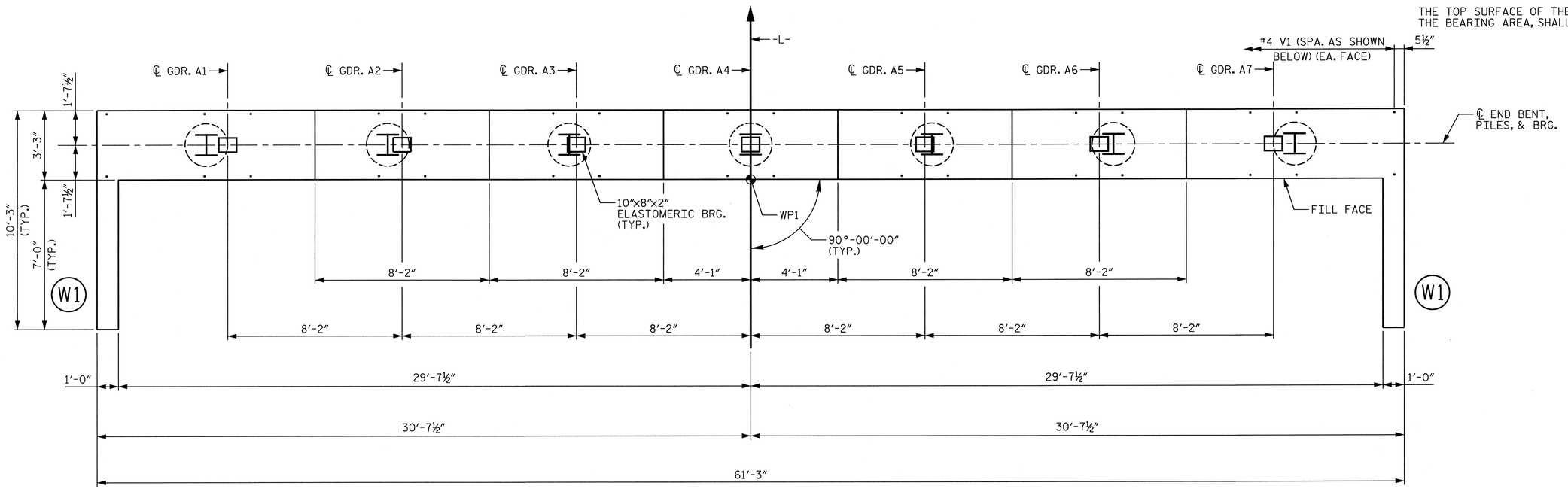

PLAN

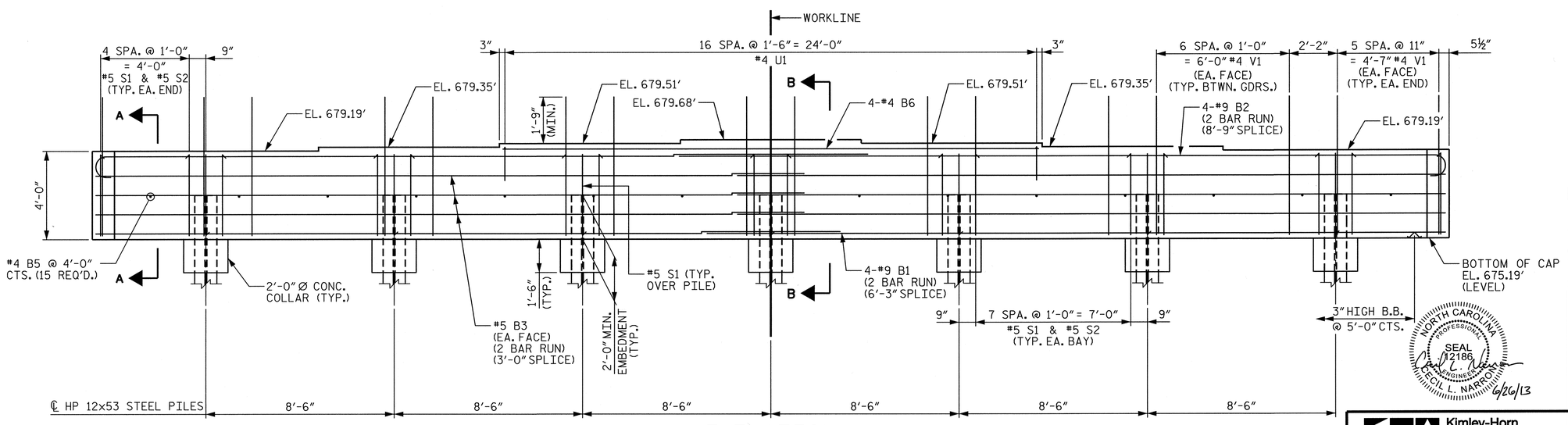

ELEVATION

PROJECT NO. 17BP.7.R.37

GUILFORD COUNTY

STATION: 15+47.50 -L-

SHEET 1 OF 3 REPLACES BRIDGE #400238

STATE OF NORTH CAROLINA
DEPARTMENT OF TRANSPORTATION
RALEIGH

SUBSTRUCTURE

END BENT 1 (INTEGRAL)

NORTH CAROLINA PROFESSIONAL SEAL 12186 ENGINEER CECIL L. NARRON 6/26/13

Kimley-Horn and Associates, Inc.
333 Fayetteville Street, Suite 600
Raleigh, NC 27601-1772
Phone (919) 835-1494
NC LICENSE # F-0102

This document, together with the concepts and designs presented herein, as an instrument of services, is intended only for the specific purpose and client for which it was prepared. Reuse of and improper reliance on this document without written authorization and adaption by Kimley-Horn and Associates, Inc. shall be without liability to Kimley-Horn and Associates, Inc.

Copyright Kimley-Horn and Associates, Inc., 2013

REVISIONS						
NO.	BY:	DATE:	NO.	BY:	DATE:	
1			3			
2			4			

SHEET NO. S-20

TOTAL SHEETS 32

DRAWN BY: CRA DATE: 6/13

CHECKED BY: JCW DATE: 6/13

6/26/2013 K:\RDT_Structures_Bridge\NC\17BP Bridges - Group EV01\036189_BR400238 - girder\Cad\dgn\S-20 - End Bent 1.dgn

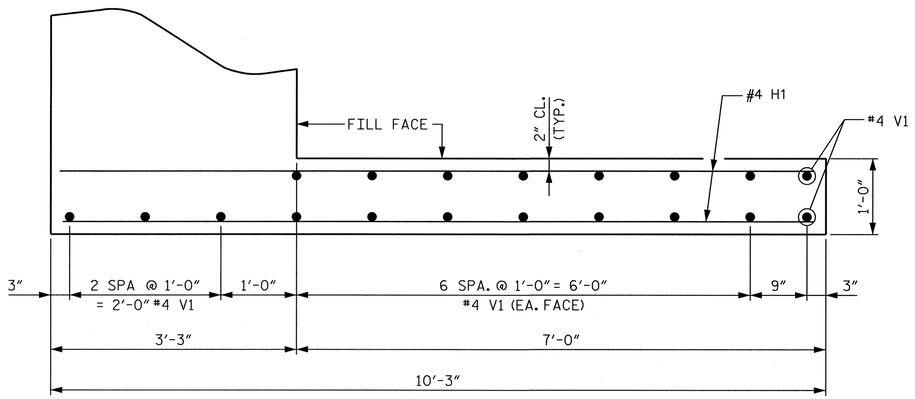

PLAN OF WING (W1)

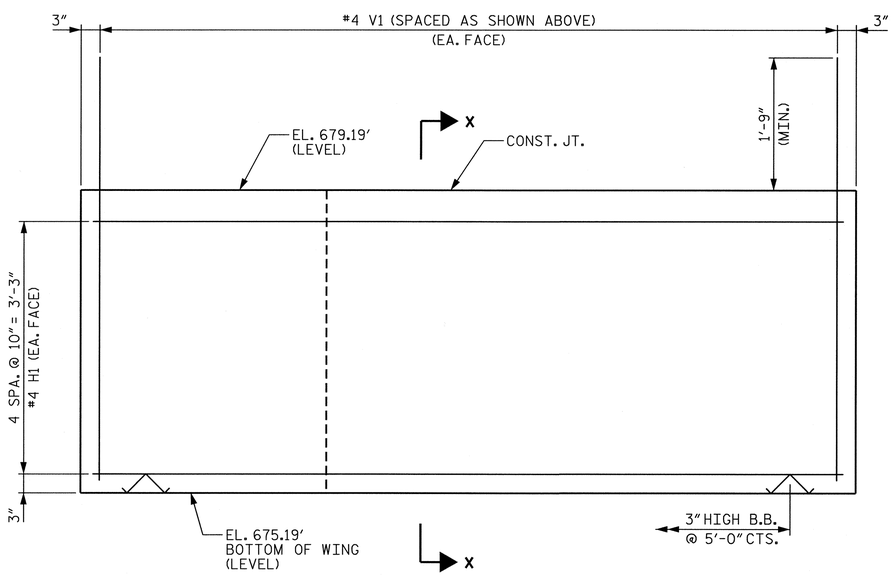

ELEVATION OF WING (W1)

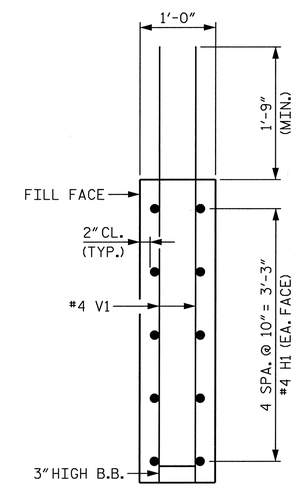

SECTION X-X

PROJECT NO. 17BP.7.R.37

GUILFORD COUNTY

STATION: 15+47.50 -L-

SHEET 2 OF 3 REPLACES BRIDGE #400238

NORTH CAROLINA PROFESSIONAL SEAL 12186 ENGINEER CECIL L. NARRON 6/26/13

STATE OF NORTH CAROLINA
DEPARTMENT OF TRANSPORTATION
RALEIGH

SUBSTRUCTURE

END BENT 1 (INTEGRAL)

Kimley-Horn and Associates, Inc.
333 Fayetteville Street, Suite 600
Raleigh, NC 27601-1772
Phone (919) 835-1494
NC LICENSE # F-0102

This document, together with the concepts and designs presented herein, as an instrument of service, is intended only for the specific purpose and client for which it was prepared. Reuse of and improper reliance on this document without written authorization and adaptation by Kimley-Horn and Associates, Inc. shall be without liability to Kimley-Horn and Associates, Inc.
Copyright Kimley-Horn and Associates, Inc., 2013

REVISIONS						
NO.	BY:	DATE:	NO.	BY:	DATE:	
1			3			
2			4			

SHEET NO. S-21

TOTAL SHEETS 32

DRAWN BY:	CRA	DATE:	6/13
CHECKED BY:	JCW	DATE:	6/13

6/26/2013 K:\RDT_Structures_Bridges\NC\17BP Bridges - Group EV01036189_BR400238 - girder\Cad\dgn\S-21 - End Bent 1 Wings.dgn

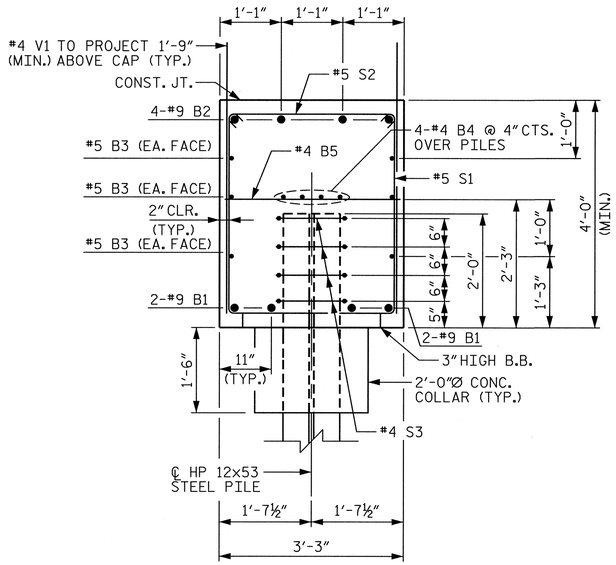

SECTION A-A

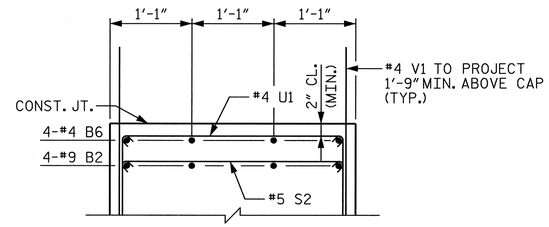

PARTIAL SECTION B-B

BAR TYPES

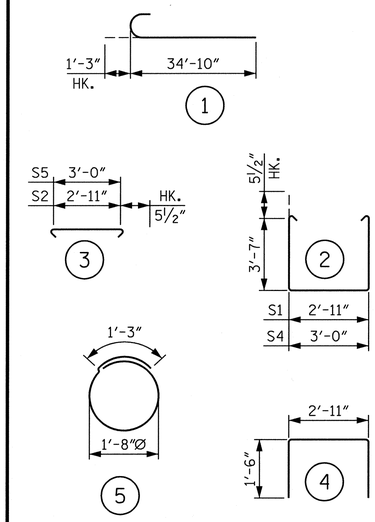

ALL BAR DIMENSIONS ARE OUT TO OUT

BILL OF MATERIAL

END BENT 1

BAR	NO.	SIZE	TYPE	LENGTH	WEIGHT
B1	8	#9	STR	33'-7"	913
B2	8	#9	1	36'-1"	981
B3	12	#5	STR	31'-11"	399
B4	12	#4	STR	21'-11"	176
B5	15	#4	STR	2'-11"	29
B6	4	#4	STR	24'-2"	65
H1	20	#4	STR	9'-11"	132
S1	65	#5	2	11'-0"	746
S2	58	#5	3	3'-10"	232
S3	28	#4	5	6'-6"	122
U1	17	#4	4	5'-11"	67
V1	146	#4	STR	6'-3"	610

REINFORCING STEEL	4,472 LBS.
CLASS A CONCRETE	34.2 C.Y.
HP 12x53 STEEL PILES: NO. 7	105 LIN. FT.
STEEL PILE POINTS	7 EACH

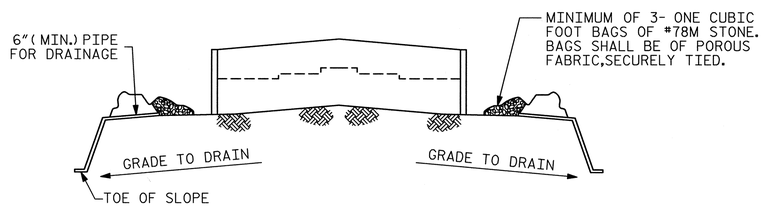

BAGGED STONE AND PIPE SHALL BE PLACED IMMEDIATELY AFTER COMPLETION OF END BENT EXCAVATION. PIPE MAY BE WITHER CONCRETE, CORRUGATED STEEL, CORRUGATED ALUMINUM ALLOY, OR CORRUGATED PLASTIC. PERFORATED PIPE WILL NOT BE ALLOWED.

BAGGED STONE SHALL REMAIN IN PLACE UNTIL THE ENGINEER DIRECTS THAT IT BE REMOVED. THE CONTRACTOR SHALL REMOVED AND DISPOSE OF SILT ACCUMULATIONS AT BAGGED STONE WHEN SO DIRECTED BY THE ENGINEER. BAGS SHALL BE REMOVED AND REPLACED WHENEVER THE ENGINEER DETERMINES THAT THEY HAVE DETERIORATED AND LOST THEIR EFFECTIVENESS.

NO SEPARATE PAYMENT WILL BE MADE FOR THIS WORK AND THE ENTIRE COST OF THIS WORK SHALL BE INCLUDED IN THE UNIT CONTRACT PRICE FOR THE SEVERAL PAY ITEMS.

TEMPORARY DRAINAGE AT END BENT

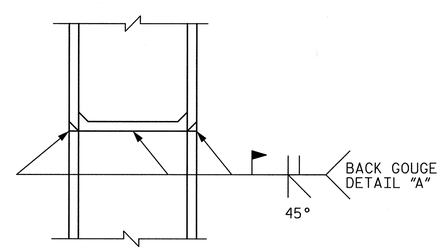

✱ PILE VERTICAL

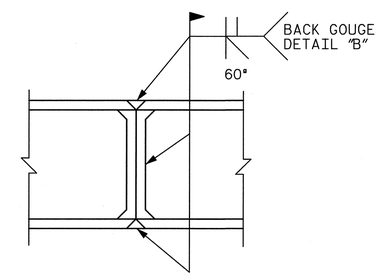

✱ PILE HORIZONTAL OR VERTICAL

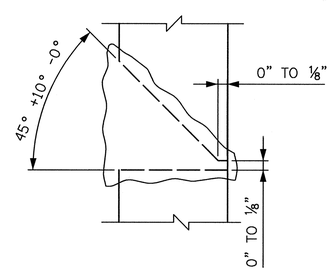

DETAIL "A"

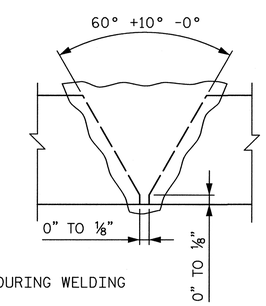

✱ POSITION OF PILE DURING WELDING

DETAIL "B"

HP PILE SPLICE DETAILS

PROJECT NO. 17BP.7.R.37

GUILFORD COUNTY

STATION: 15+47.50 -L-

SHEET 3 OF 3 REPLACES BRIDGE #400238

STATE OF NORTH CAROLINA
DEPARTMENT OF TRANSPORTATION
RALEIGH

SUBSTRUCTURE

END BENT 1
(INTEGRAL)

NORTH CAROLINA PROFESSIONAL SEAL 12186 ENGINEER CECIL L. NARRONA 6/20/13

Kimley-Horn and Associates, Inc.
333 Fayetteville Street, Suite 600
Raleigh, NC 27601-1772
Phone (919) 835-1494
NC LICENSE # F-0102

This document, together with the concepts and designs presented herein, as an instrument of services, is intended only for the specific purpose and client for which it was prepared. Reuse of and improper reliance of this document without written authorization and adoption by Kimley-Horn and Associates, Inc. shall be without liability to Kimley-Horn and Associates, Inc.

Copyright Kimley-Horn and Associates, Inc., 2013

REVISIONS						SHEET NO.
NO.	BY:	DATE:	NO.	BY:	DATE:	S-22
1			3			TOTAL SHEETS
2			4			32

DRAWN BY: CRA DATE: 6/13
CHECKED BY: JCW DATE: 6/13

6/26/2013 K:\RDT_Structures_Bridge\NC\17BP Bridges - Group EV01\036189.BR400238 - girder\Cad\dgn\S-22 - End Bent 1 Details.dgn

NOTES

STIRRUPS AND U1 BARS MAY BE SHIFTED AS NECESSARY TO CLEAR ANCHOR BOLTS.

ALL STEEL IN DRILLED PIERS IS INCLUDED IN THE PAY ITEMS FOR "REINFORCING STEEL" AND "SPIRAL COLUMN REINFORCING STEEL".

SPLICING OF LONGITUDINAL BARS IN THE DRILLED PIER WILL NOT BE PERMITTED.

THE LOCATION OF THE PERMITTED CONSTRUCTION JOINT IN THE DRILLED PIER IS BASED ON APPROXIMATE GROUND LINE ELEVATION. IF THE PERMITTED CONSTRUCTION JOINT IS ABOVE THE ACTUAL GROUND LINE ELEVATION, THE CONTRACTOR SHALL PLACE THE PERMITTED CONSTRUCTION JOINT 1'-0" BELOW THE GROUND LINE.

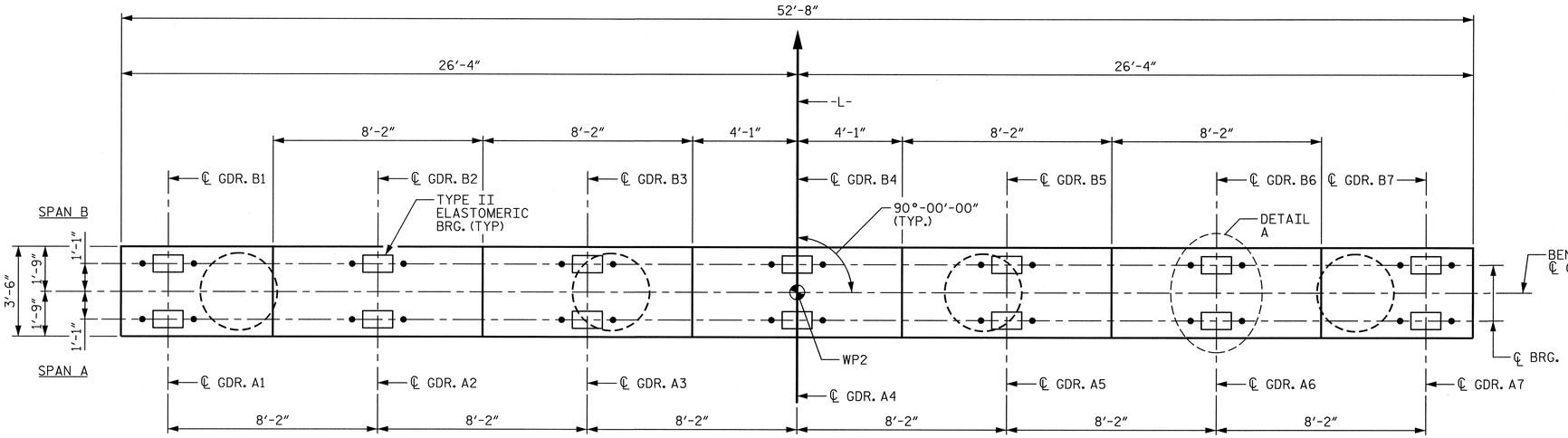

PLAN

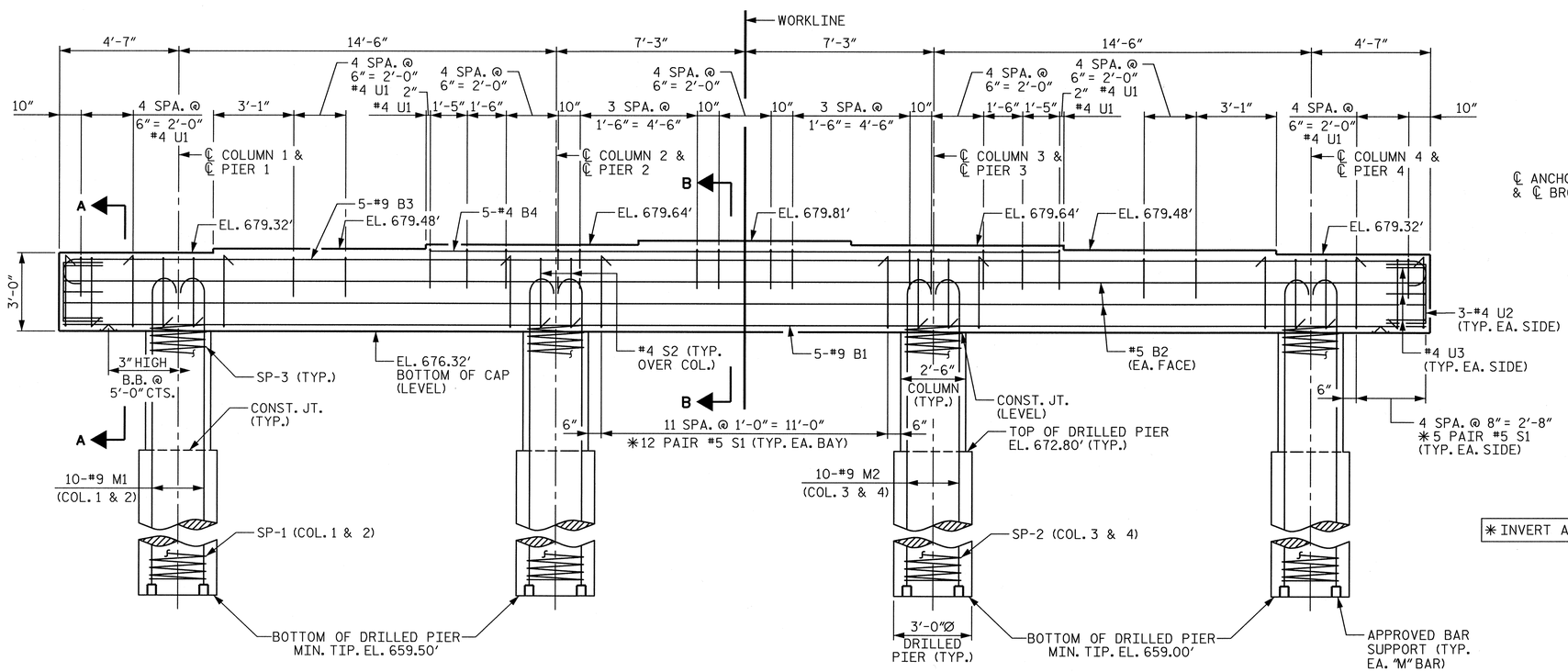

✱ INVERT ALTERNATE STIRRUPS

ELEVATION

(REINFORCING STEEL AND DIMENSIONS ARE TYPICAL FOR EACH COLUMN.)

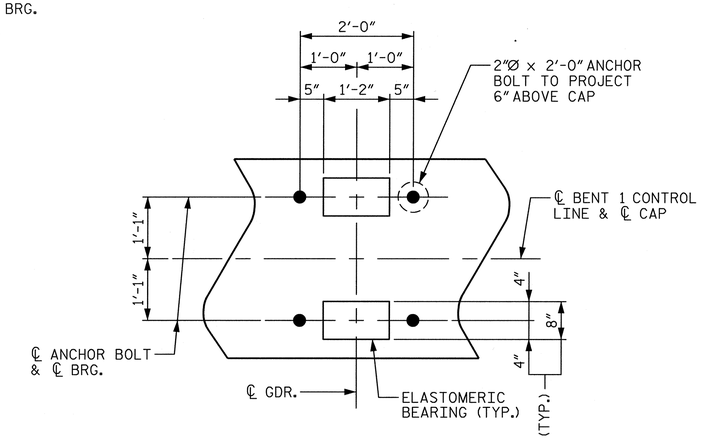

DETAIL A

(TYP. EA. GDR.)

PROJECT NO. 17BP.7.R.37

GUILFORD COUNTY

STATION: 15+47.50 -L-

SHEET 1 OF 2 REPLACES BRIDGE #400238

STATE OF NORTH CAROLINA
DEPARTMENT OF TRANSPORTATION
RALEIGH

SUBSTRUCTURE

BENT 1

NORTH CAROLINA PROFESSIONAL SEAL 12186 ENGINEER CECIL L. NARRONS 6/26/13

Kimley-Horn and Associates, Inc.
333 Fayetteville Street, Suite 600
Raleigh, NC 27601-1772
Phone (919) 835-1494
NC LICENSE # F-0102

This document, together with the concepts and designs presented herein, as an instrument of service, is intended only for the specific purpose and client for which it was prepared. Reuse of and improper reliance on this document without written authorization and adaption by Kimley-Horn and Associates, Inc. shall be without liability to Kimley-Horn and Associates, Inc.

Copyright Kimley-Horn and Associates, Inc., 2013

REVISIONS						SHEET NO.
NO.	BY:	DATE:	NO.	BY:	DATE:	S-23
1			3			TOTAL SHEETS
2			4			32

DRAWN BY: CRA DATE: 6/13
CHECKED BY: JCW DATE: 6/13

K:\RDT_Structures_Bridge\NC\17BP Bridges - Group E\01\036189_BR400238 - girder\Cad\dgn\S-23 - Bent 1.dgn
6/26/2013

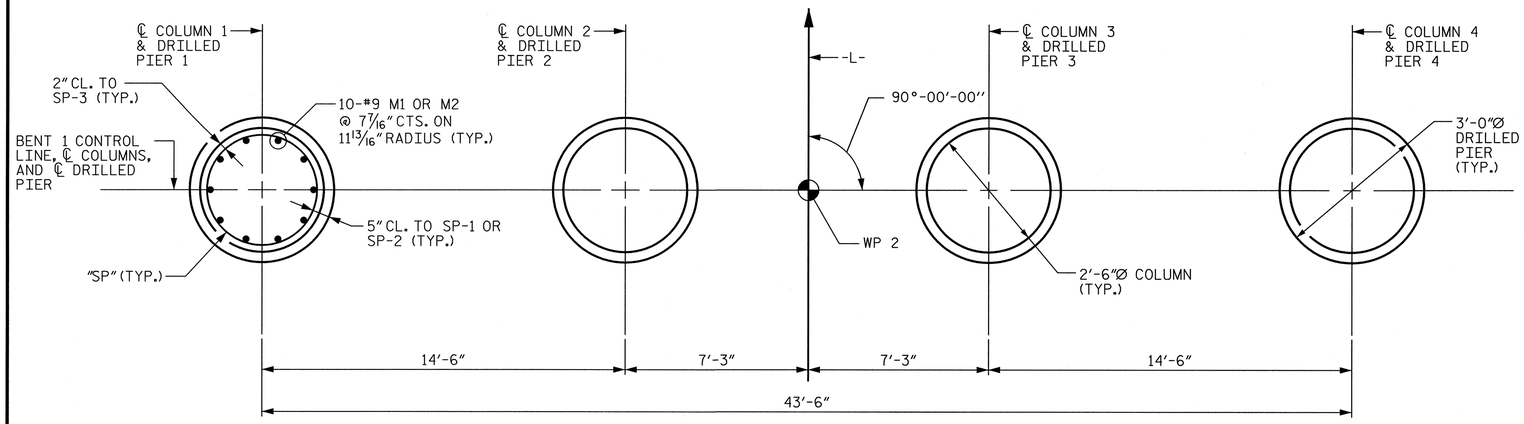

PLAN OF DRILLED PIERS & COLUMNS

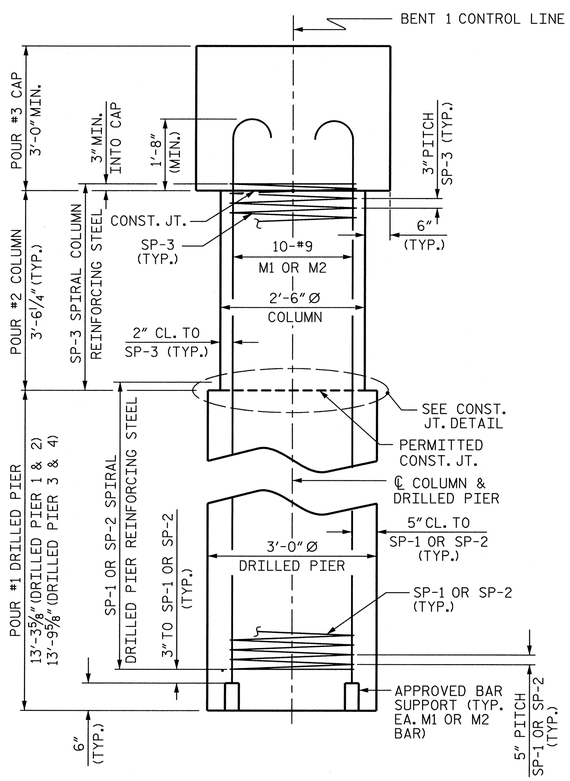

END ELEVATION

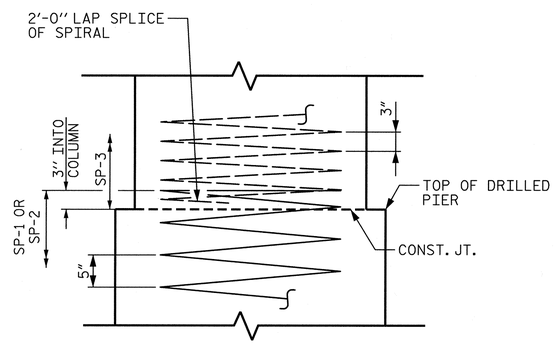

CONSTRUCTION JOINT DETAIL

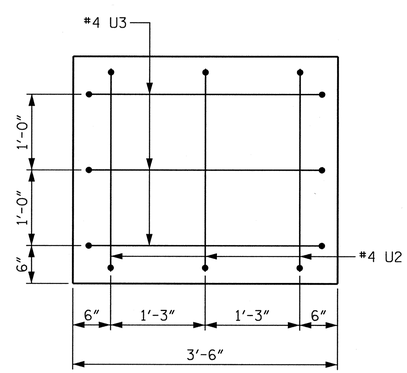

END OF CAP VIEW

BAR TYPES

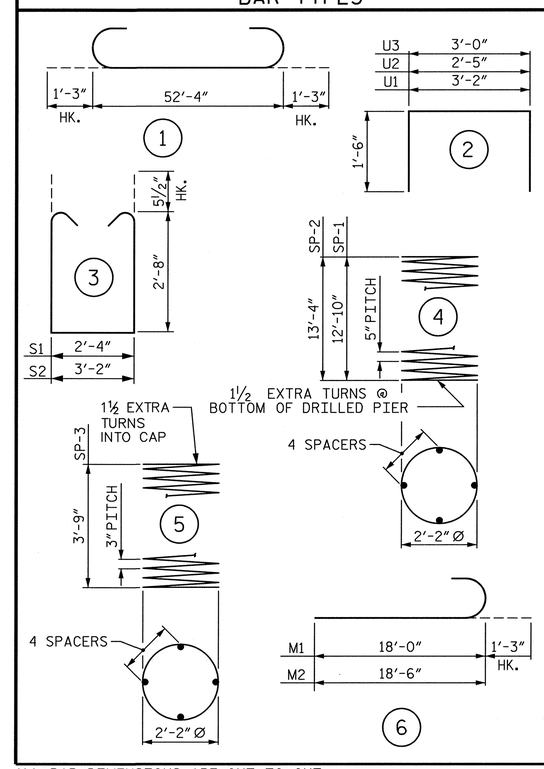

ALL BAR DIMENSIONS ARE OUT TO OUT

BILL OF MATERIAL

FOR BENT 1

BAR	NO.	SIZE	TYPE	LENGTH	WEIGHT
B1	5	#9	STR	52'-4"	890
B2	4	#5	STR	52'-4"	218
B3	5	#9	1	54'-10"	932
B4	5	#4	STR	24'-2"	81
M1	20	#9	6	19'-3"	1309
M2	20	#9	6	19'-9"	1334
S1	92	#5	3	8'-7"	824
S2	8	#5	3	9'-5"	79
U1	47	#4	2	6'-2"	194
U2	6	#4	2	5'-5"	22
U3	6	#4	2	6'-0"	24
REINFORCING STEEL					LBS. 5,914
SP-1	2	*	4	268'-2"	560
SP-2	2	*	4	276'-5"	577
SP-3	4	**	5	110'-3"	295
SPIRAL COLUMN REINFORCING STEEL (FOR ONE BENT)					1,432 LBS.

* THE SP-1 & SP-2 SPIRAL REINFORCING STEEL SHALL BE W31 OR D-31 COLD DRAWN WIRE OR #5 PLAIN OR DEFORMED BAR

** THE SP-3 SPIRAL REINFORCING STEEL SHALL BE W20 OR D-20 COLD DRAWN WIRE OR #4 PLAIN OR DEFORMED BAR

CLASS A CONCRETE BREAKDOWN (FOR BENT 1)

POUR #2 (COLUMNS)	2.6 C.Y.
POUR #3 (CAP)	22.0 C.Y.
TOTAL CLASS A CONCRETE	24.6 C.Y.

DRILLED PIERS: (FOR BENT 1)

DRILLED PIER CONCRETE POUR #1 (DRILLED PIERS)	14.2 C.Y.
3'-0"Ø DRILLED PIER NOT IN SOIL	25 LIN. FT.
3'-0"Ø DRILLED PIER IN SOIL	30 LIN. FT.
PERMANENT STEEL CASING FOR 3'-0"Ø DRILLED PIER	0 LIN. FT.
CSL TUBES	241 LIN. FT.

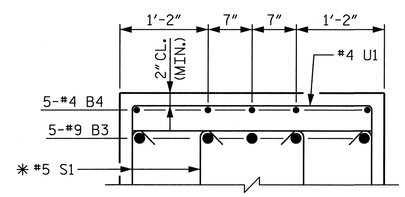

PARTIAL SECTION B-B

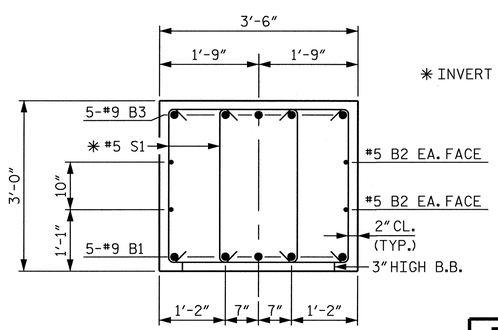

SECTION A-A

PROJECT NO. 17BP.7.R.37

GUILFORD COUNTY

STATION: 15+47.50 -L-

SHEET 2 OF 2 REPLACES BRIDGE #400238

STATE OF NORTH CAROLINA
DEPARTMENT OF TRANSPORTATION
RALEIGH

SUBSTRUCTURE

BENT 1

NORTH CAROLINA PROFESSIONAL SEAL 12186 ENGINEER CECIL L. NARRON 6/26/13

Kimley-Horn and Associates, Inc.
333 Fayetteville Street, Suite 600
Raleigh, NC 27601-1772
Phone (919) 835-1494
NC LICENSE # F-0102

This document, together with the concepts and designs presented herein, as an instrument of service, is intended only for the specific purpose and client for which it was prepared. Reuse of and improper reliance on this document without written authorization and adaptation by Kimley-Horn and Associates, Inc. shall be without liability to Kimley-Horn and Associates, Inc.
Copyright Kimley-Horn and Associates, Inc., 2013

REVISIONS						
NO.	BY:	DATE:	NO.	BY:	DATE:	
1			3			
2			4			

SHEET NO. S-24

TOTAL SHEETS 32

DRAWN BY: CRA DATE: 6/13
CHECKED BY: JCW DATE: 6/13

6/26/2013 K:\RDT_Structures_Bridge\NC\17BP Bridges - Group E\01103689_BR400238 - gir-der\Cad\dgn\S-24 - Bent 1 Details.dgn

NOTES

STIRRUPS AND U1 BARS MAY BE SHIFTED AS NECESSARY TO CLEAR ANCHOR BOLTS.

ALL STEEL IN DRILLED PIERS IS INCLUDED IN THE PAY ITEMS FOR "REINFORCING STEEL" AND "SPIRAL COLUMN REINFORCING STEEL".

SPLICING OF LONGITUDINAL BARS IN THE DRILLED PIER WILL NOT BE PERMITTED.

THE LOCATION OF THE PERMITTED CONSTRUCTION JOINT IN THE DRILLED PIER IS BASED ON APPROXIMATE GROUND LINE ELEVATION. IF THE PERMITTED CONSTRUCTION JOINT IS ABOVE THE ACTUAL GROUND LINE ELEVATION, THE CONTRACTOR SHALL PLACE THE PERMITTED CONSTRUCTION JOINT 1'-0" BELOW THE GROUND LINE.

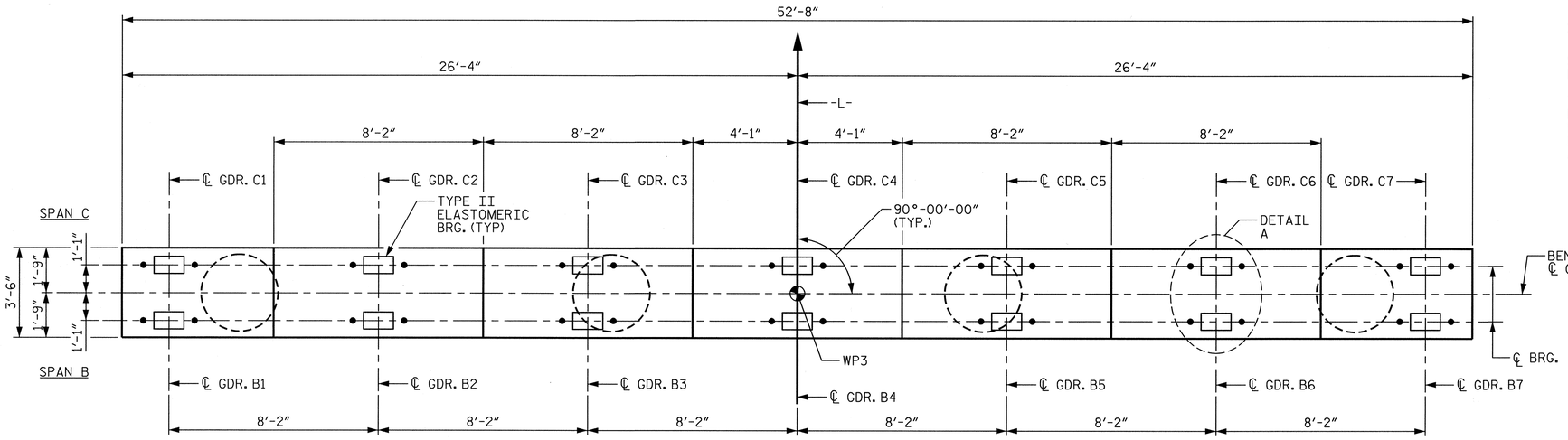

PLAN

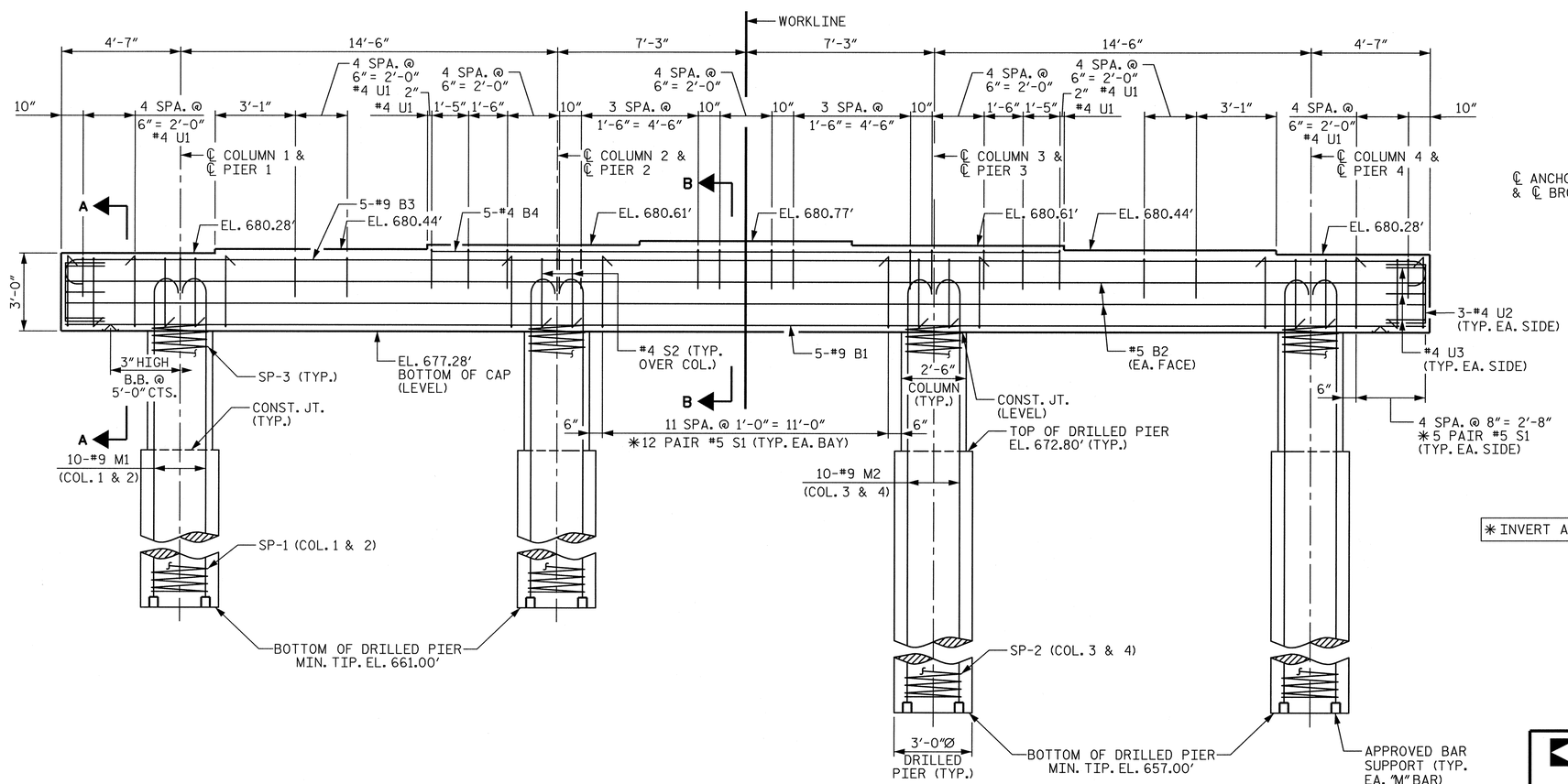

ELEVATION

(REINFORCING STEEL AND DIMENSIONS ARE TYPICAL FOR EACH COLUMN.)

✳ INVERT ALTERNATE STIRRUPS

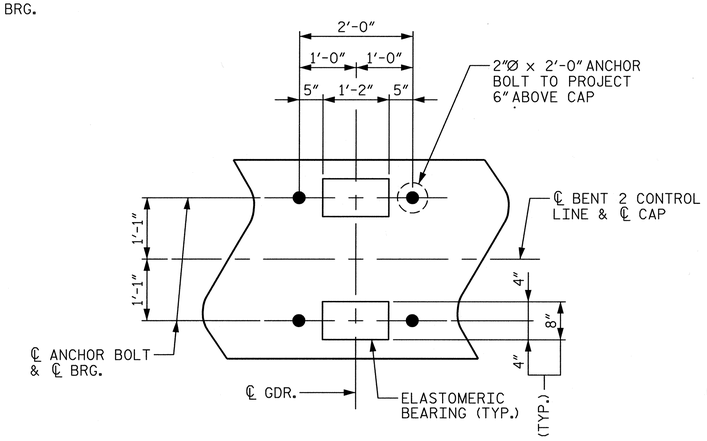

DETAIL A

(TYP. EA. GDR.)

PROJECT NO. 17BP.7.R.37

GUILFORD COUNTY

STATION: 15+47.50 -L-

SHEET 1 OF 2 REPLACES BRIDGE #400238

STATE OF NORTH CAROLINA
DEPARTMENT OF TRANSPORTATION
RALEIGH

SUBSTRUCTURE

BENT 2

NORTH CAROLINA PROFESSIONAL SEAL 12186 ENGINEER CECIL L. NARRON 6/26/13

Kimley-Horn and Associates, Inc.
333 Fayetteville Street, Suite 600
Raleigh, NC 27601-1772
Phone (919) 835-1494
NC LICENSE # F-0102

This document, together with the concepts and designs presented herein, as an instrument of service, is intended only for the specific purpose and client for which it was prepared. Reuse of and improvements to this document without written authorization and adaptation by Kimley-Horn and Associates, Inc. shall be without liability to Kimley-Horn and Associates, Inc.
Copyright Kimley-Horn and Associates, Inc., 2013

REVISIONS						SHEET NO.
NO.	BY:	DATE:	NO.	BY:	DATE:	S-25
1			3			TOTAL SHEETS
2			4			32

DRAWN BY: CRA DATE: 6/13
CHECKED BY: JCW DATE: 6/13

6/26/2013 K:\RDT_Structures_Bridge\NC\17BP Bridges - Group EV11036189_BR400238 - girder\Cad\dgn\S-25 - Bent 2.dgn

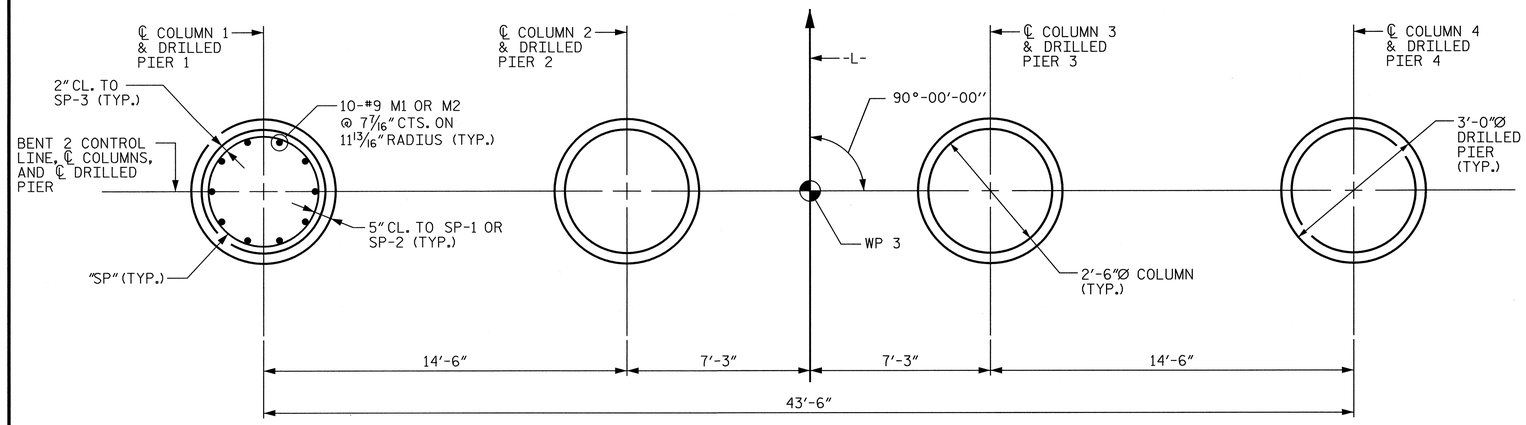

PLAN OF DRILLED PIERS & COLUMNS

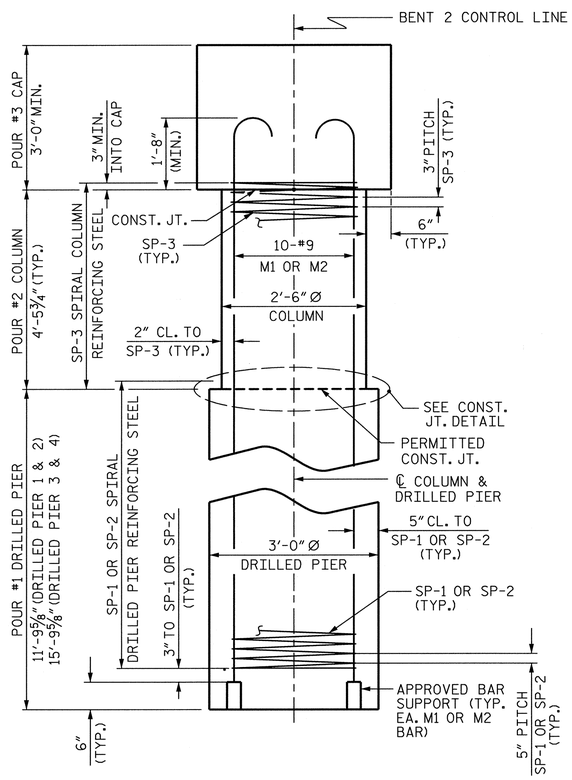

END ELEVATION

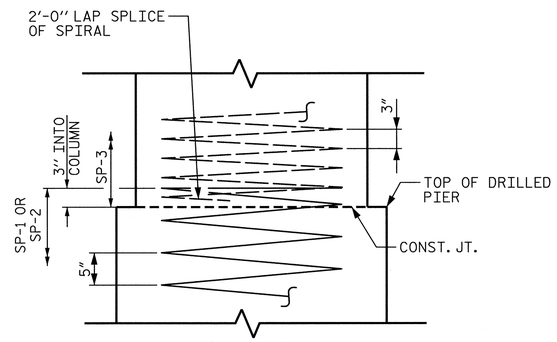

CONSTRUCTION JOINT DETAIL

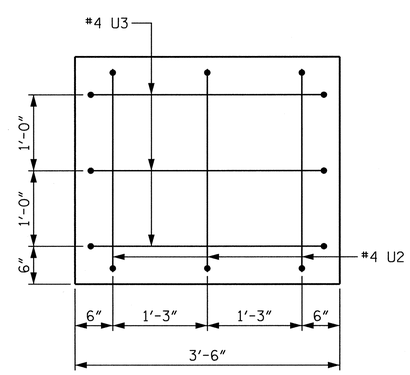

END OF CAP VIEW

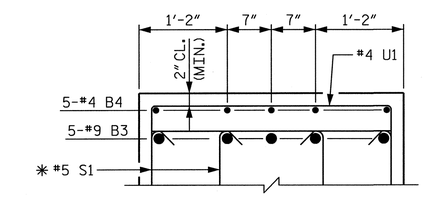

PARTIAL SECTION B-B

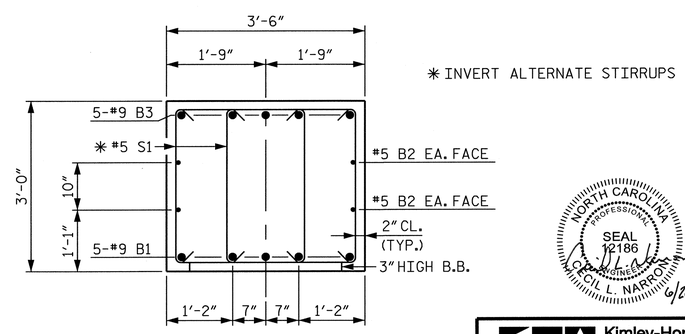

SECTION A-A

BAR TYPES

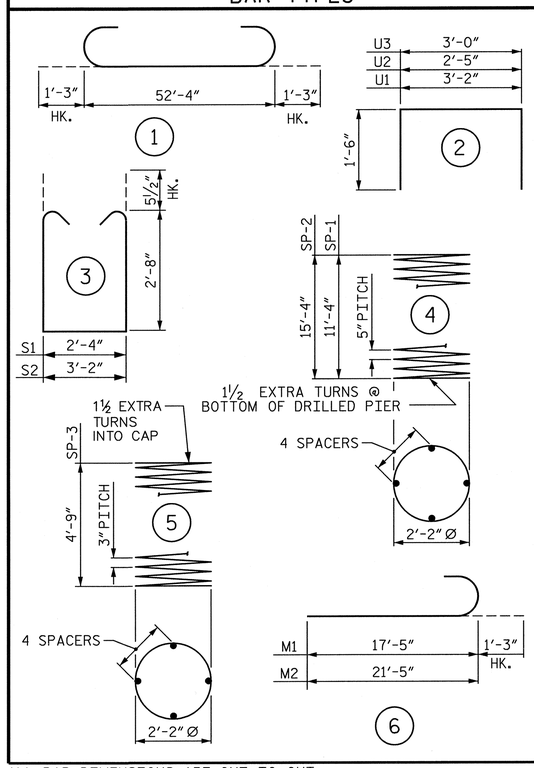

ALL BAR DIMENSIONS ARE OUT TO OUT

BILL OF MATERIAL

FOR BENT 2

BAR	NO.	SIZE	TYPE	LENGTH	WEIGHT
B1	5	#9	STR	52'-4"	890
B2	4	#5	STR	52'-4"	218
B3	5	#9	1	54'-10"	932
B4	5	#4	STR	24'-2"	81
M1	20	#9	6	18'-8"	1269
M2	20	#9	6	22'-8"	1541
S1	92	#5	3	8'-7"	824
S2	8	#5	3	9'-5"	79
U1	47	#4	2	6'-2"	194
U2	6	#4	2	5'-5"	22
U3	6	#4	2	6'-0"	24
REINFORCING STEEL					LBS. 6,073
SP-1	2	✳	4	239'-3"	499
SP-2	2	✳	4	317'-8"	663
SP-3	4	✳✳	5	137'-0"	366
SPIRAL COLUMN REINFORCING STEEL (FOR ONE BENT)					1,528 LBS.

✳ THE SP-1 & SP-2 SPIRAL REINFORCING STEEL SHALL BE W31 OR D-31 COLD DRAWN WIRE OR #5 PLAIN OR DEFORMED BAR

✳✳ THE SP-3 SPIRAL REINFORCING STEEL SHALL BE W20 OR D-20 COLD DRAWN WIRE OR #4 PLAIN OR DEFORMED BAR

CLASS A CONCRETE BREAKDOWN (FOR BENT 1)

POUR #2 (COLUMNS)	3.3 C.Y.
POUR #3 (CAP)	22.0 C.Y.
TOTAL CLASS A CONCRETE	25.3 C.Y.

DRILLED PIERS: (FOR BENT 1)

DRILLED PIER CONCRETE POUR #1 (DRILLED PIERS)	14.5 C.Y.
3'-0"Ø DRILLED PIER NOT IN SOIL	20 LIN. FT.
3'-0"Ø DRILLED PIER IN SOIL	36 LIN. FT.
PERMANENT STEEL CASING FOR 3'-0"Ø DRILLED PIER	0 LIN. FT.
CSL TUBES	245 LIN. FT.

PROJECT NO. 17BP.7.R.37

GUILFORD COUNTY

STATION: 15+47.50 -L-

SHEET 2 OF 2 REPLACES BRIDGE #400238

STATE OF NORTH CAROLINA
DEPARTMENT OF TRANSPORTATION
RALEIGH

SUBSTRUCTURE

BENT 2

NORTH CAROLINA PROFESSIONAL SEAL 12186 ENGINEER CECIL L. NARRON 6/26/13

Kimley-Horn and Associates, Inc.
333 Fayetteville Street, Suite 600
Raleigh, NC 27601-1772
Phone (919) 835-1494
NC LICENSE # F-0102

This document, together with the concepts and designs presented herein, as an instrument of service, is intended only for the specific purpose and client for which it was prepared. Reuse of and improper reliance on this document without written authorization and adoption by Kimley-Horn and Associates, Inc. shall be without liability to Kimley-Horn and Associates, Inc.

Copyright Kimley-Horn and Associates, Inc., 2013

REVISIONS								SHEET NO.
NO.	BY:	DATE:	NO.	BY:	DATE:			S-26
1			3					TOTAL SHEETS
2			4					32

DRAWN BY: CRA DATE: 6/13
CHECKED BY: JCW DATE: 6/13

6/26/2013 K:\RDT_Structures_Bridge\NC\17BP Bridges - Group E\01036189.BR400238 - gir-der\Cadd\dgn\S-26 - Bent 2 Details.dgn

NOTES

FOR PILE SPLICE DETAILS, SEE SHEET 3 OF 3.

SEE ADDITIONAL NOTES ON SHEET S-20.

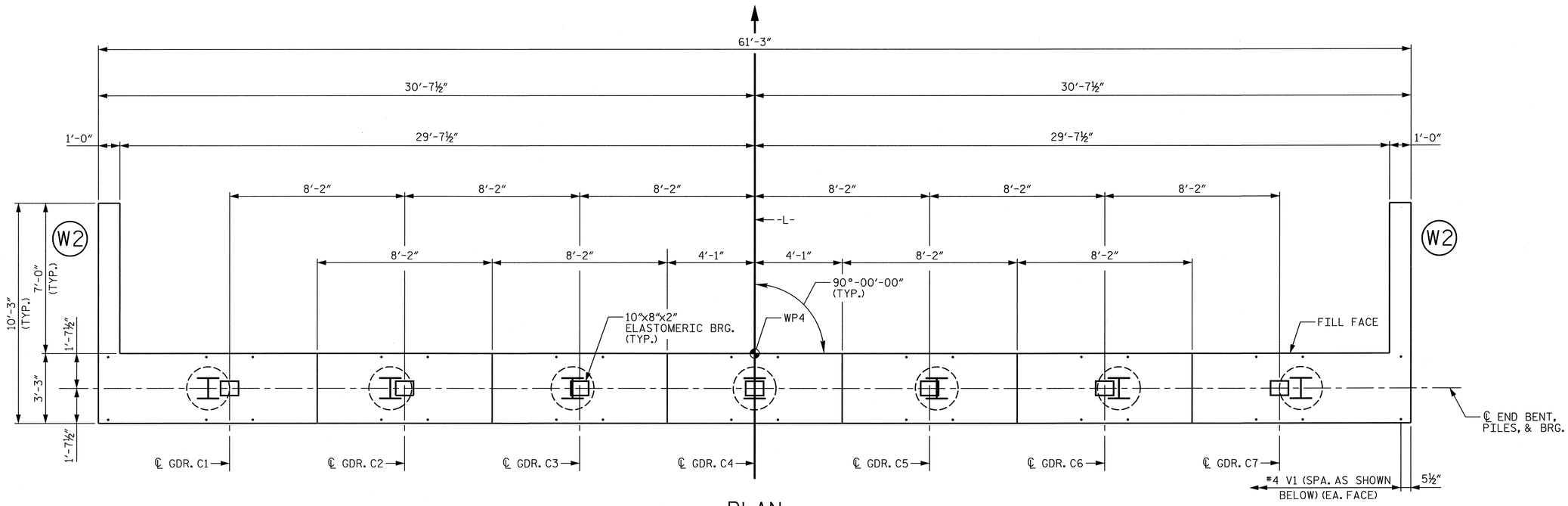

PLAN

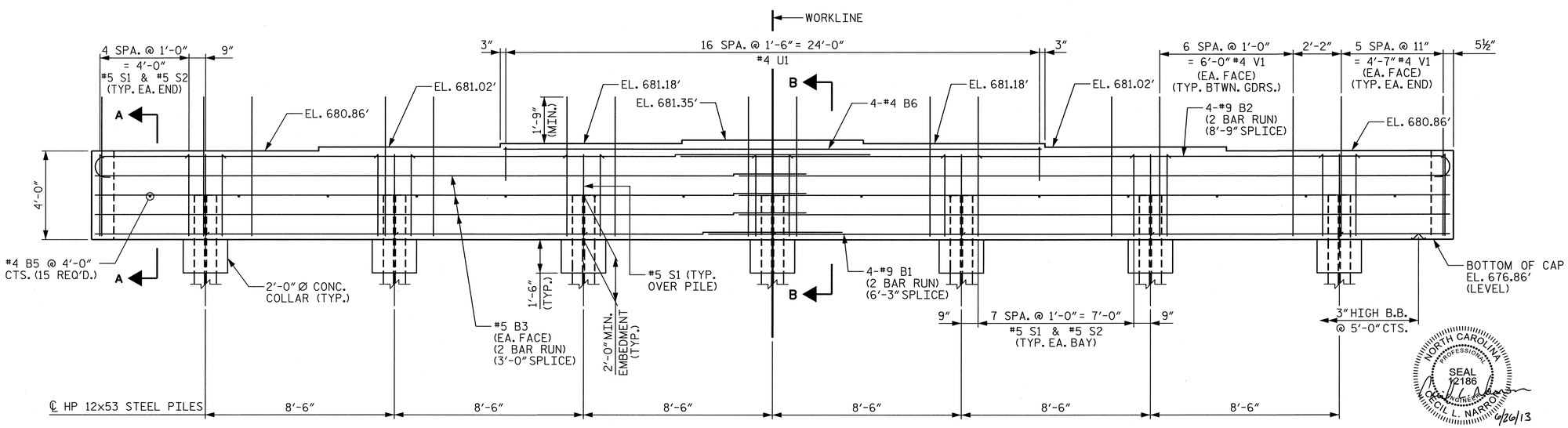

ELEVATION

PROJECT NO. 17BP.7.R.37

GUILFORD COUNTY

STATION: 15+47.50 -L-

SHEET 1 OF 3 REPLACES BRIDGE #400238

STATE OF NORTH CAROLINA
DEPARTMENT OF TRANSPORTATION
RALEIGH

SUBSTRUCTURE

END BENT 2 (INTEGRAL)

NORTH CAROLINA PROFESSIONAL SEAL 12186 ENGINEER CECIL L. NARRON 6/26/13

Kimley-Horn and Associates, Inc.
333 Fayetteville Street, Suite 600
Raleigh, NC 27601-1772
Phone (919) 835-1494
NC LICENSE # F-0102

This document, together with the concepts and designs presented herein, as an instrument of services, is intended only for the specific purpose and client for which it was prepared. Reuse of and improper reliance on this document without written authorization and adaption by Kimley-Horn and Associates, Inc. shall be without liability to Kimley-Horn and Associates, Inc.

Copyright Kimley-Horn and Associates, Inc., 2013

REVISIONS							
NO.	BY:	DATE:	NO.	BY:	DATE:		
1			3				
2			4				

SHEET NO. S-27

TOTAL SHEETS 32

DRAWN BY: CRA DATE: 6/13

CHECKED BY: JCW DATE: 6/13

K:\RDT_Structures_Bridge\NC\17BP Bridges - Group EV01\036189_BR400238 - girder\Cad\dgn\S-27 - End Bent 2.dgn

6/26/2013

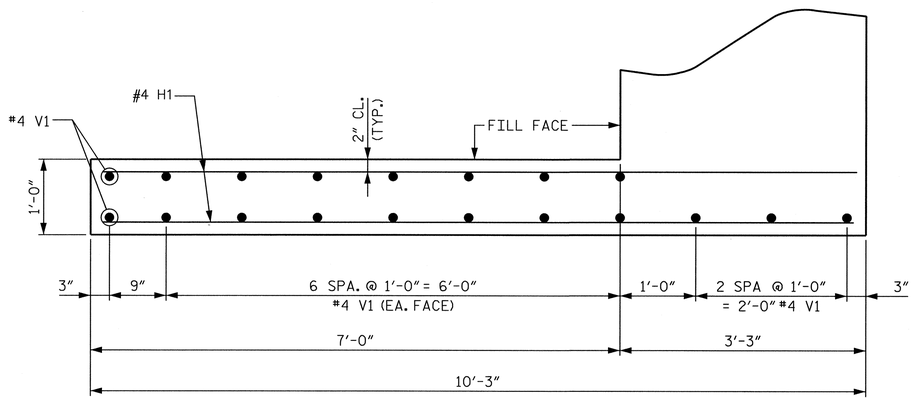

PLAN OF WING (W2)

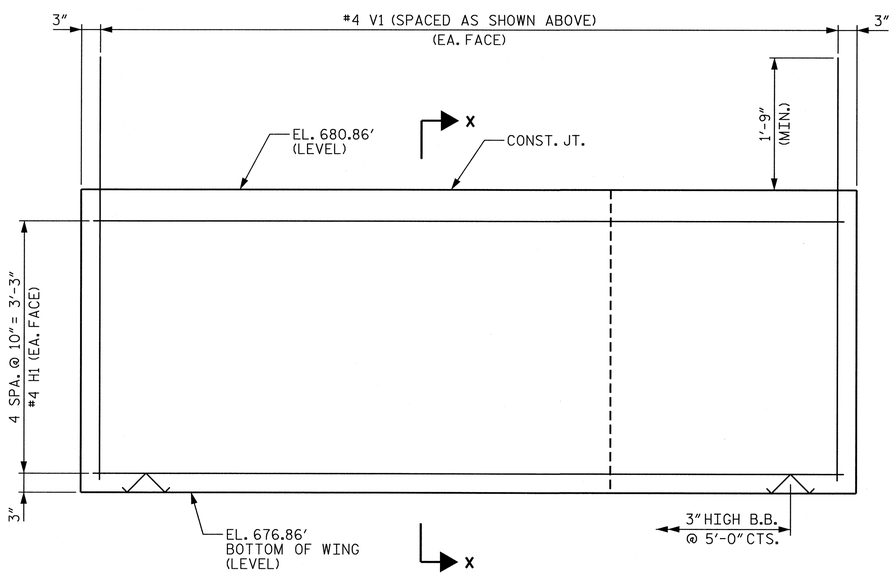

ELEVATION OF WING (W2)

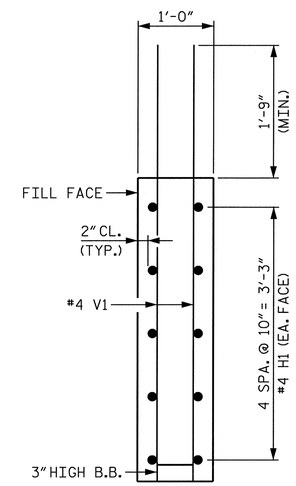

SECTION X-X

PROJECT NO. 17BP.7.R.37

GUILFORD COUNTY

STATION: 15+47.50 -L-

SHEET 2 OF 3 REPLACES BRIDGE #400238

NORTH CAROLINA PROFESSIONAL SEAL 12186 ENGINEER CECIL L. NARRON 6/26/13

STATE OF NORTH CAROLINA
DEPARTMENT OF TRANSPORTATION
RALEIGH

SUBSTRUCTURE

END BENT 2
(INTEGRAL)

Kimley-Horn and Associates, Inc.
333 Fayetteville Street, Suite 600
Raleigh, NC 27601-1772
Phone (919) 835-1494
NC LICENSE # F-0102

This document, together with the concepts and designs presented herein, as an instrument of services, is intended only for the specific purpose and client for which it was prepared. Reuse of and improper reliance on this document without written authorization and adaption by Kimley-Horn and Associates, Inc. shall be without liability to Kimley-Horn and Associates, Inc.
Copyright Kimley-Horn and Associates, Inc., 2013

REVISIONS						
NO.	BY:	DATE:	NO.	BY:	DATE:	
1			3			
2			4			

SHEET NO. S-28

TOTAL SHEETS 32

DRAWN BY: CRA DATE: 6/13
CHECKED BY: JCW DATE: 6/13

6/26/2013 K:\RDT_Structures_Bridge\NC\17BP Bridges - Group E\01103189_BR400238 - girder\Cad\dgn\S-28 - End Bent 2 Wings.dgn

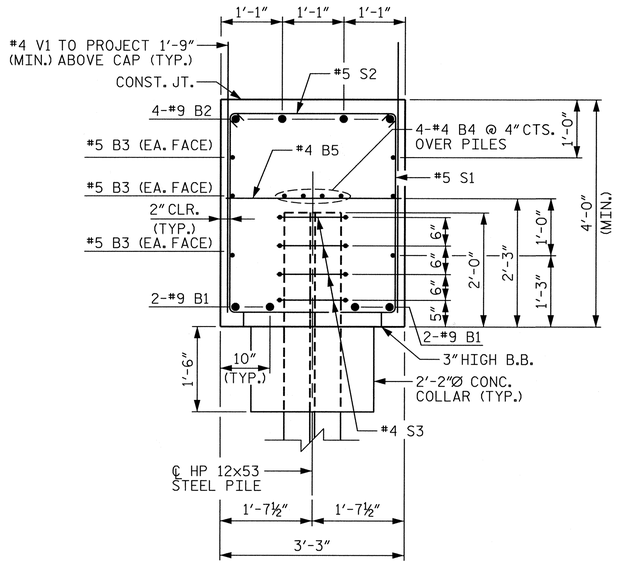

SECTION A-A

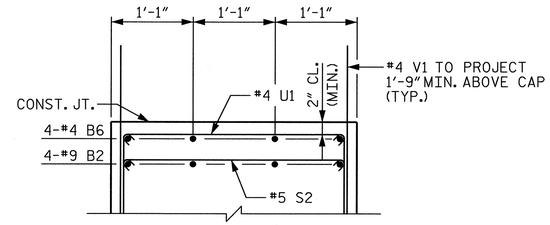

PARTIAL SECTION B-B

BAR TYPES

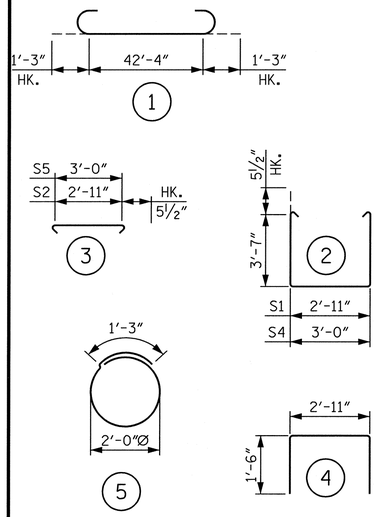

ALL BAR DIMENSIONS ARE OUT TO OUT

BILL OF MATERIAL

END BENT 2

BAR	NO.	SIZE	TYPE	LENGTH	WEIGHT
B1	8	#9	STR	33'-7"	913
B2	8	#9	1	36'-1"	981
B3	12	#5	STR	31'-11"	399
B4	12	#4	STR	21'-11"	176
B5	15	#4	STR	2'-11"	29
B6	4	#4	STR	24'-2"	65
H1	20	#4	STR	9'-11"	132
S1	65	#5	2	11'-0"	746
S2	58	#5	3	3'-10"	232
S3	28	#4	5	6'-6"	122
U1	17	#4	4	5'-11"	67
V1	146	#4	STR	6'-3"	610

REINFORCING STEEL	4,472 LBS.
CLASS A CONCRETE	34.2 C.Y.
HP 12x53 STEEL PILES: NO. 7	140 LIN. FT.
STEEL PILE POINTS	7 EACH

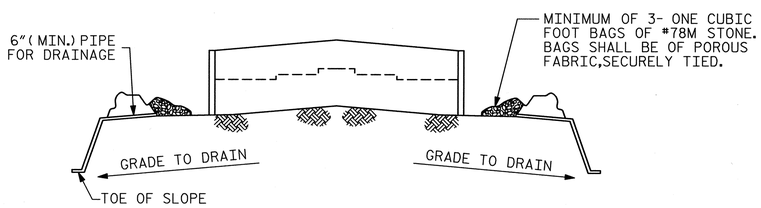

BAGGED STONE AND PIPE SHALL BE PLACED IMMEDIATELY AFTER COMPLETION OF END BENT EXCAVATION. PIPE MAY BE WITHER CONCRETE, CORRUGATED STEEL, CORRUGATED ALUMINUM ALLOY, OR CORRUGATED PLASTIC. PERFORATED PIPE WILL NOT BE ALLOWED.

BAGGED STONE SHALL REMAIN IN PLACE UNTIL THE ENGINEER DIRECTS THAT IT BE REMOVED. THE CONTRACTOR SHALL REMOVED AND DISPOSE OF SILT ACCUMULATIONS AT BAGGED STONE WHEN SO DIRECTED BY THE ENGINEER. BAGS SHALL BE REMOVED AND REPLACED WHENEVER THE ENGINEER DETERMINES THAT THEY HAVE DETERIORATED AND LOST THEIR EFFECTIVENESS.

NO SEPARATE PAYMENT WILL BE MADE FOR THIS WORK AND THE ENTIRE COST OF THIS WORK SHALL BE INCLUDED IN THE UNIT CONTRACT PRICE FOR THE SEVERAL PAY ITEMS.

TEMPORARY DRAINAGE AT END BENT

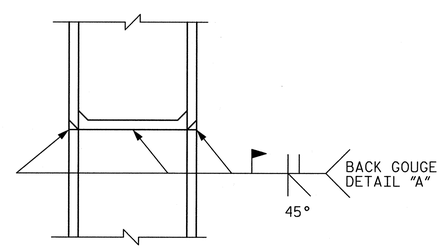

✱ PILE VERTICAL

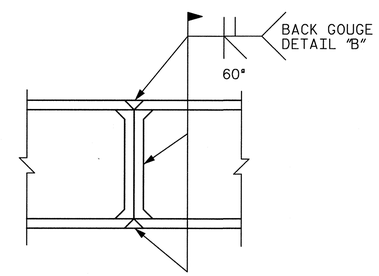

✱ PILE HORIZONTAL OR VERTICAL

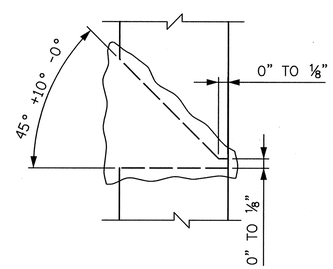

DETAIL "A"

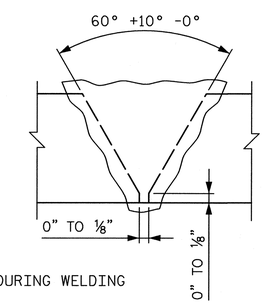

✱ POSITION OF PILE DURING WELDING

DETAIL "B"

HP PILE SPLICE DETAILS

PROJECT NO. 17BP.7.R.37

GUILFORD COUNTY

STATION: 15+47.50 -L-

SHEET 3 OF 3 REPLACES BRIDGE #400238

NORTH CAROLINA PROFESSIONAL SEAL 12186 ENGINEER CECIL L. NARRONA 6/26/13

Kimley-Horn and Associates, Inc.
333 Fayetteville Street, Suite 600
Raleigh, NC 27601-1772
Phone (919) 835-1494
NC LICENSE # F-0102

This document, together with the concepts and designs presented herein, as an instrument of services, is intended only for the specific purpose and client for which it was prepared. Reuse of and improper reliance on this document without written authorization and adaption by Kimley-Horn and Associates, Inc. shall be without liability to Kimley-Horn and Associates, Inc.
Copyright Kimley-Horn and Associates, Inc., 2013

STATE OF NORTH CAROLINA
DEPARTMENT OF TRANSPORTATION
RALEIGH

SUBSTRUCTURE

END BENT 2 (INTEGRAL)

REVISIONS						SHEET NO.
NO.	BY:	DATE:	NO.	BY:	DATE:	S-29
1			3			TOTAL SHEETS
2			4			32

DRAWN BY: CRA DATE: 6/13
CHECKED BY: JCW DATE: 6/13

6/26/2013 K:\RDT_Structures_Bridge\NC\17BP Bridges - Group EV01036189_BR400238 - girder\Cad\dgn\S-29 - End Bent 2 Details.dgn

NOTES

FOR BERM WIDTH DIMENSIONS, SEE GENERAL DRAWING.

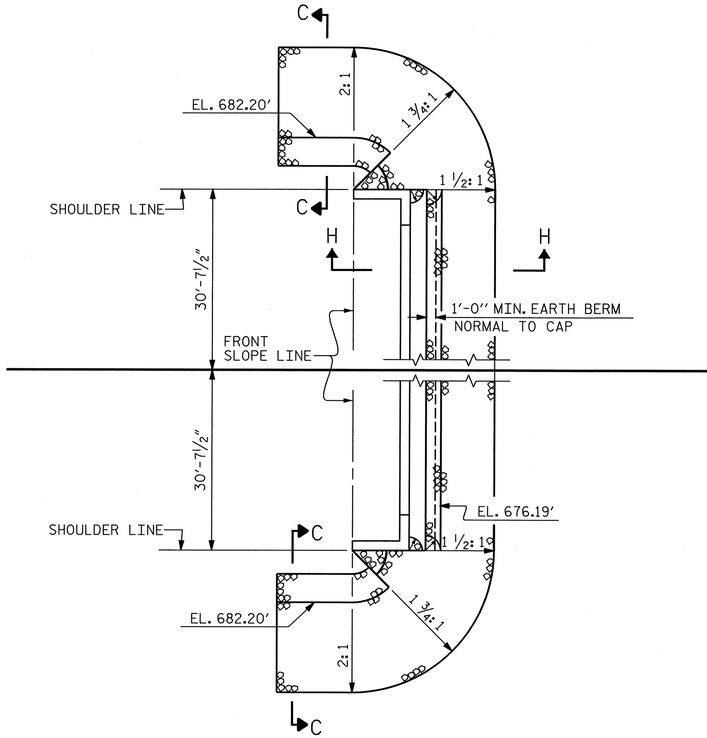

END BENT 1

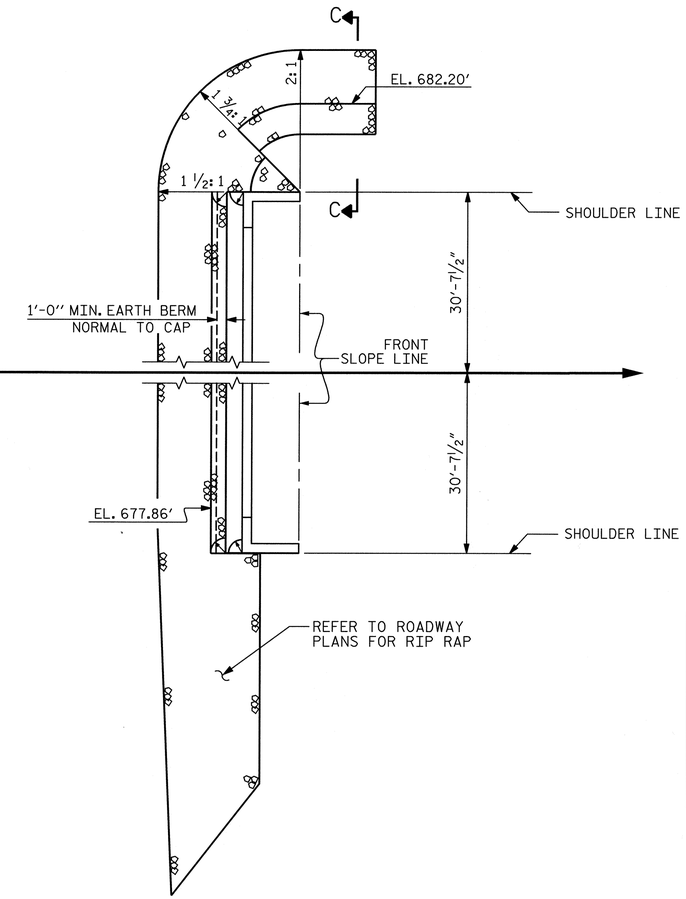

END BENT 2

ESTIMATED QUANTITIES		
BRIDGE @ STA. 16+30.00 -L-	RIP RAP CLASS II (2'-0" THICK)	GEOTEXTILE FOR DRAINAGE
	TONS	SQUARE YARDS
END BENT 1	190	215
END BENT 2	220	250
TOTAL	410	465

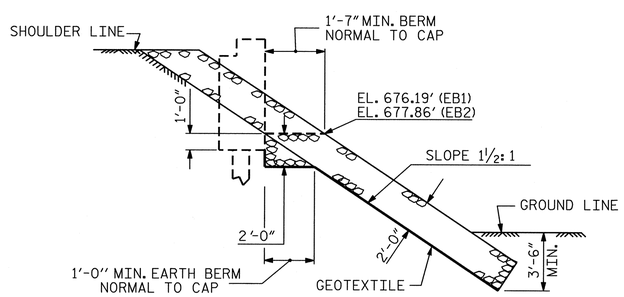

SECTION H-H

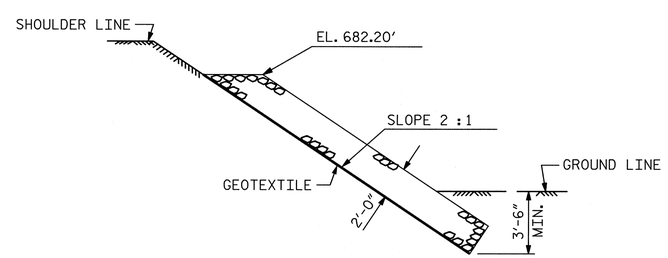

SECTION C-C

PROJECT NO. 17BP.7.R.37

GUILFORD COUNTY

STATION: 15+47.50 -L-

REPLACES BRIDGE #400238

STATE OF NORTH CAROLINA
DEPARTMENT OF TRANSPORTATION
RALEIGH

STANDARD

RIP RAP DETAILS

NORTH CAROLINA PROFESSIONAL SEAL 12186 ENGINEER NEGIL L. NARRON 6/26/13

Kimley-Horn and Associates, Inc.
333 Fayetteville Street, Suite 600
Raleigh, NC 27601-1772
Phone (919) 835-1494
NC LICENSE # F-0102

This document, together with the concepts and designs presented herein, as an instrument of services, is intended only for the specific purpose and client for which it was prepared. Reuse of and improper reliance of this document without written authorization and adaption by Kimley-Horn and Associates, Inc. shall be without liability to Kimley-Horn and Associates, Inc.

Copyright Kimley-Horn and Associates, Inc., 2013

REVISIONS							SHEET NO.
NO.	BY:	DATE:	NO.	BY:	DATE:		S-30
1			3				TOTAL SHEETS
2			4				32

STD. NO. RR1

DRAWN BY : REK 1/84	REV. 5/1/06R	TLA/GM	
CHECKED BY : RDU 1/84	REV. 10/1/11	MAA/GM	
	REV. 12/21/11	MAA/GM	
DRAWN BY: CRA	DATE: 6/13		
CHECKED BY: JCW	DATE: 6/13		

6/26/2013

K:\RDT_Structures_Bridge\NC\17BP Bridges - Group EV01036189.BR400238 - girder\Cad\dgn\S-30 - Rip Rap Details.dgn

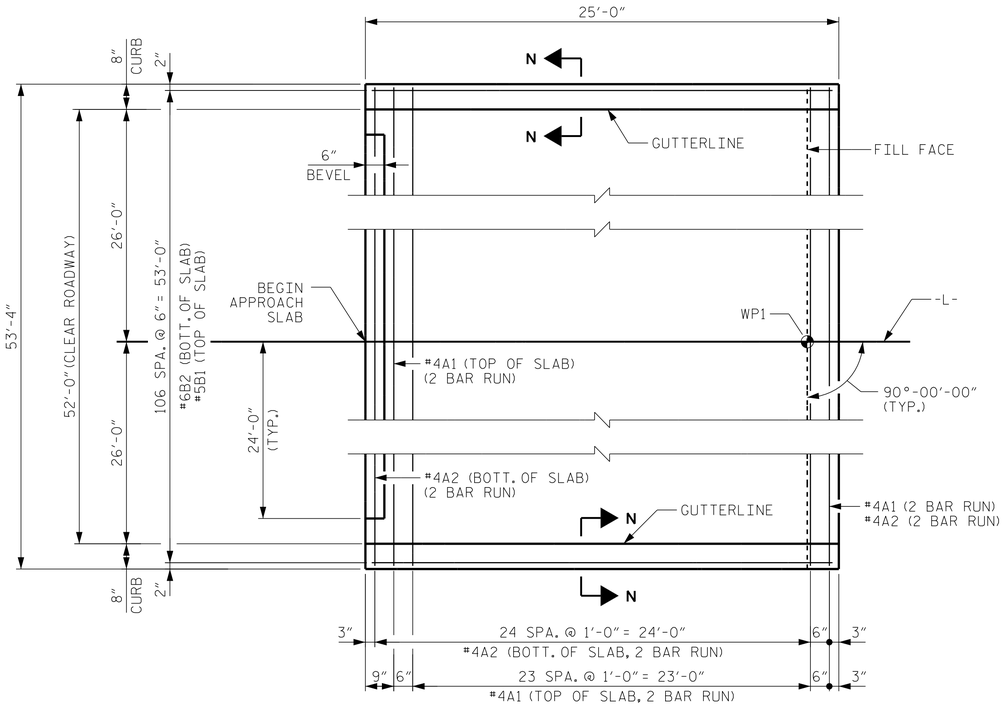

PLAN @ END BENT NO. 1

(END BENT 2 SIMILAR)

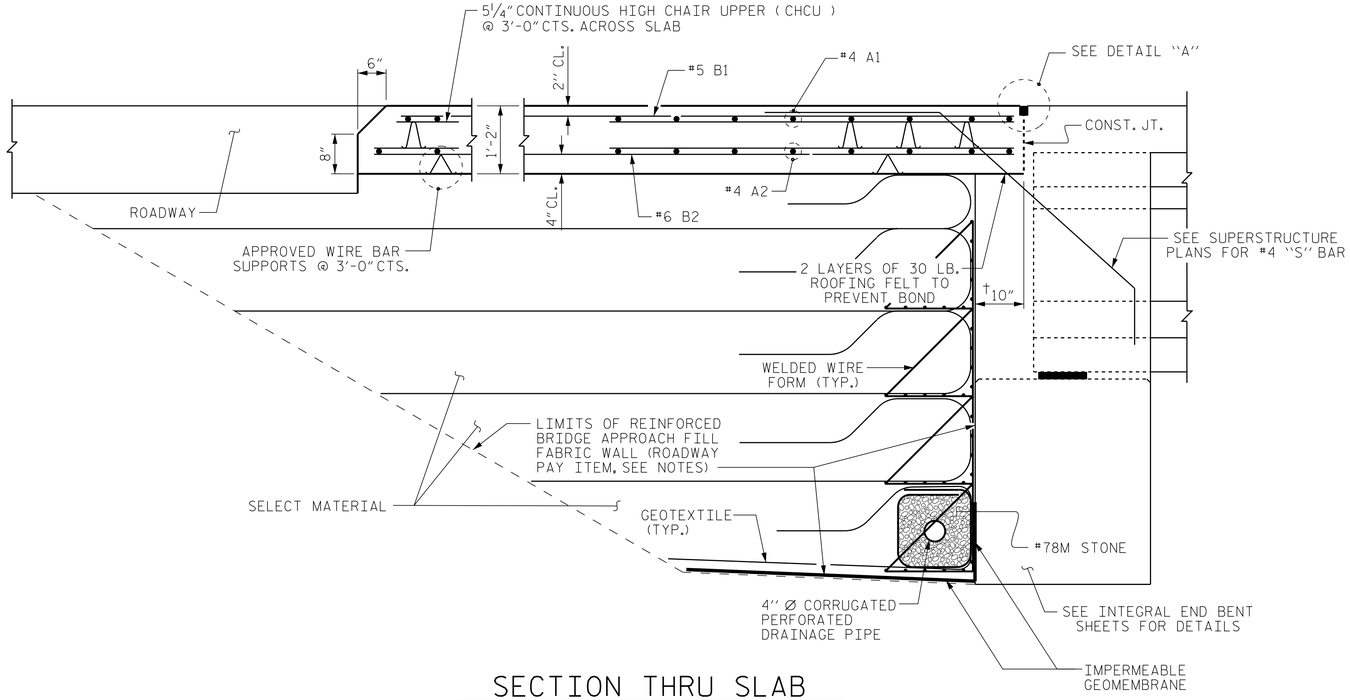

SECTION THRU SLAB

NOTES

APPROACH SLAB SHALL NOT BE CONSTRUCTED PRIOR TO COMPLETION OF THE BRIDGE DECK.

FOR REINFORCED BRIDGE APPROACH FILL INCLUDING GEOTEXTILE, IMPERMEABLE GEOMEMBRANE, 4" Ø DRAINAGE PIPE, #78M STONE, AND SELECT MATERIAL, SEE ROADWAY PLANS.

AREA BETWEEN THE WINGWALL AND APPROACH SLAB SHALL BE GRADED TO DRAIN THE WATER AWAY FROM THE FILL FACE OF THE BRIDGE AND SHALL BE PAVED. SEE ROADWAY PLANS.

THE JOINT OPENING AT THE APPROACH SLAB/DECK INTERFACE SHALL BE SAWED NO MORE THAN 12 HOURS AFTER THE APPROACH SLAB IS CAST. THE JOINT SHALL BE CLEANED OF ALL DEBRIS BEFORE THE SEALANT IS APPLIED. THE JOINT SEALER MATERIAL SHALL CONFORM TO THE REQUIREMENTS OF SECTION 1028-3 OF THE STANDARD SPECIFICATIONS.

BILL OF MATERIAL

FOR ONE APPROACH SLAB (2 REQ'D)

BAR	NO.	SIZE	TYPE	LENGTH	WEIGHT
✳A1	52	#4	STR	27'-6"	955
A2	52	#4	STR	27'-5"	952
✳B1	107	#5	STR	24'-2"	2697
B2	107	#6	STR	24'-8"	3964

REINFORCING STEEL	4,917 LBS.
✳ EPOXY COATED REINFORCING STEEL	3,652 LBS.
CLASS AA CONCRETE	57.7 C.Y.

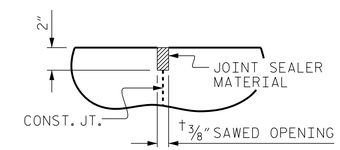

DETAIL "A"

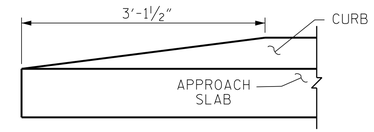

END OF CURB WITHOUT SHOULDER BERM GUTTER

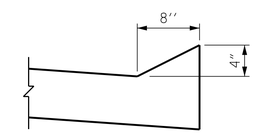

SECTION N-N

PROJECT NO. 17BP.7.R.37

GUILFORD COUNTY

STATION: 15+47.50 -L-

REPLACES BRIDGE #400238

NORTH CAROLINA PROFESSIONAL SEAL 12186 ENGINEER CECIL L. NARRON 6/18/14

STATE OF NORTH CAROLINA
DEPARTMENT OF TRANSPORTATION
RALEIGH

BRIDGE APPROACH SLAB FOR INTEGRAL ABUTMENT

Kimley-Horn and Associates, Inc.
333 Fayetteville Street, Suite 600
Raleigh, NC 27601-1772
Phone (919) 835-1494
NC LICENSE # F-0102

This document, together with the concepts and designs presented herein, as an instrument of services, is intended only for the specific purpose and client for which it was prepared. Reuse of and improper reliance on this document without written authorization and adaptation by Kimley-Horn and Associates, Inc. shall be without liability to Kimley-Horn and Associates, Inc.

Copyright Kimley-Horn and Associates, Inc., 2013

REVISIONS						SHEET NO.
NO.	BY:	DATE:	NO.	BY:	DATE:	S-31
1			3			TOTAL SHEETS
2			4			32

DRAWN BY: CRA DATE: 6/14
CHECKED BY: JCW DATE: 6/14

K:\RDI_Structures_Bridge\NC\17BP Bridges - Group E\01103189.BR400238 - girder\Cad\dgn\S-31 - Approach Slab Plan.dgn
6/18/2014

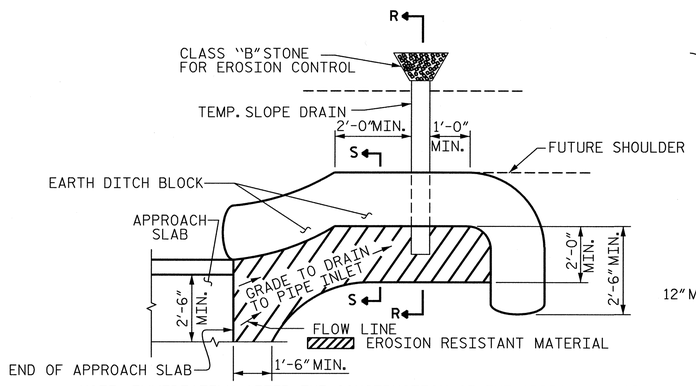

NOTE: IMMEDIATELY AFTER THE CONSTRUCTION OF THE APPROACH SLAB, THE CONTRACTOR SHALL PROVIDE TEMPORARY BERM AND SLOPE DRAIN. CONTRACTOR SHALL GRADE TO PIPE INLET AND PROVIDE EROSION RESISTANT MATERIAL AS SHOWN. THE EROSION RESISTANT MATERIAL SHALL BE EITHER 1) ASPHALT PLANT MIX, TYPE 1 OR TYPE 2, MIN. 2" DEPTH, 2) EROSION CONTROL MAT, OR 3) CONCRETE, AS DIRECTED BY THE ENGINEER. THE SLOPE DRAIN SHALL CONSIST OF A NON-PERFORATED TEMPORARY DRAINAGE PIPE, 12 INCHES IN DIAMETER.

PLAN VIEW

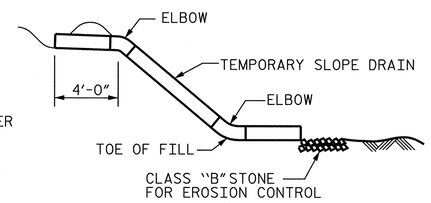

SECTION R-R

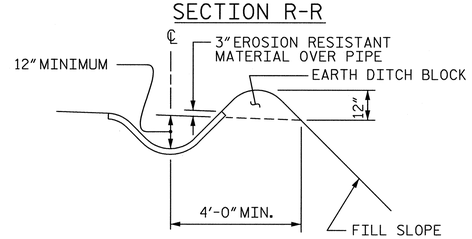

SECTION S-S

TEMPORARY BERM AND SLOPE DRAIN DETAILS

(TO BE USED WHEN SHOULDER BERM GUTTER IS REQUIRED)

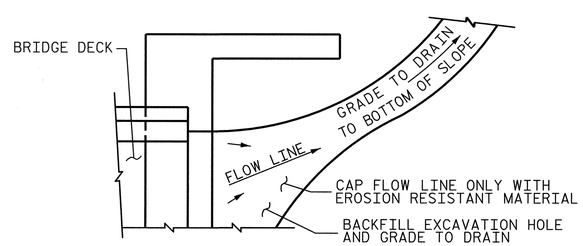

NOTE: IF THE APPROACH SLAB IS NOT CONSTRUCTED IMMEDIATELY AFTER THE BACKFILLING OF THE END BENT EXCAVATION, GRADE TO DRAIN TO THE BOTTOM OF THE SLOPE AND PROVIDE EROSION RESISTANT MATERIAL, SUCH AS FIBERGLASS ROVING OR AS DIRECTED BY THE ENGINEER TO PREVENT SOIL EROSION AND TO PROTECT THE AREA ADJACENT TO THE STRUCTURE. THE CONTRACTOR WILL BE REQUIRED TO REMOVE THESE MATERIALS PRIOR TO CONSTRUCTION OF THE APPROACH SLAB.

TEMPORARY DRAINAGE DETAIL

PROJECT NO. 17BP.7.R.37

GUILFORD COUNTY

STATION: 15+47.50 -L-

REPLACES BRIDGE #400238

STATE OF NORTH CAROLINA
DEPARTMENT OF TRANSPORTATION
RALEIGH

BRIDGE APPROACH SLAB DETAILS

NORTH CAROLINA PROFESSIONAL SEAL 12186 ENGINEER CECIL L. NARROW 6/26/13

Kimley-Horn and Associates, Inc.
333 Fayetteville Street, Suite 600
Raleigh, NC 27601-1772
Phone (919) 835-1494
NC LICENSE # F-0102

This document, together with the concepts and designs presented herein, as an instrument of services, is intended only for the specific purpose and client for which it was prepared. Reuse of and improper reliance on this document without written consent by Kimley-Horn and Associates, Inc. shall be without liability to Kimley-Horn and Associates, Inc.
Copyright Kimley-Horn and Associates, Inc., 2013

REVISIONS						
NO.	BY:	DATE:	NO.	BY:	DATE:	
1			3			
2			4			

SHEET NO. S-32

TOTAL SHEETS 32

STD. NO. BAS4

DRAWN BY : FCJ	11/88	REV. 5/1/06 RRR	MAA/KMM
CHECKED BY : ARB	11/88	REV. 10/1/11	MAA/GM
		REV. 7/12	MAA/GM
DRAWN BY: CRA		DATE: 6/13	
CHECKED BY: JCW		DATE: 6/13	

6/26/2013 K:\ROI_Structures_Bridge\NC\17BP Bridges - Group E\01036189_BR400238 - girder\Cad\dgn\S-32 - Approach Slab Details.dgn