DocuSign Envelope ID: 19313705-1199-4A8A-B54A-3B7ED459EB8D

TIP PROJECT: 17BP.7.R.30

CONTRACT:

STATE	STATE PROJECT REFERENCE NO.	SHEET NO.	TOTAL SHEETS
N.C.	17BP.7.R.30	1	

STATE PROJECT NO.	F.A. PROJ. NO.	DESCRIPTION

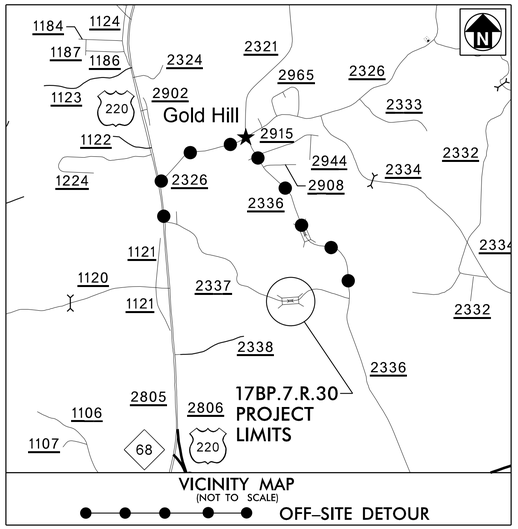

VICINITY MAP
(NOT TO SCALE)
OFF-SITE DETOUR

STATE OF NORTH CAROLINA
DIVISION OF HIGHWAYS

ROCKINGHAM COUNTY

LOCATION: BRIDGE NO.191 OVER JACOBS CREEK ON SR 2337 (CARLTON ROAD)

TYPE OF WORK: GRADING, PAVING, DRAINAGE AND STRUCTURE

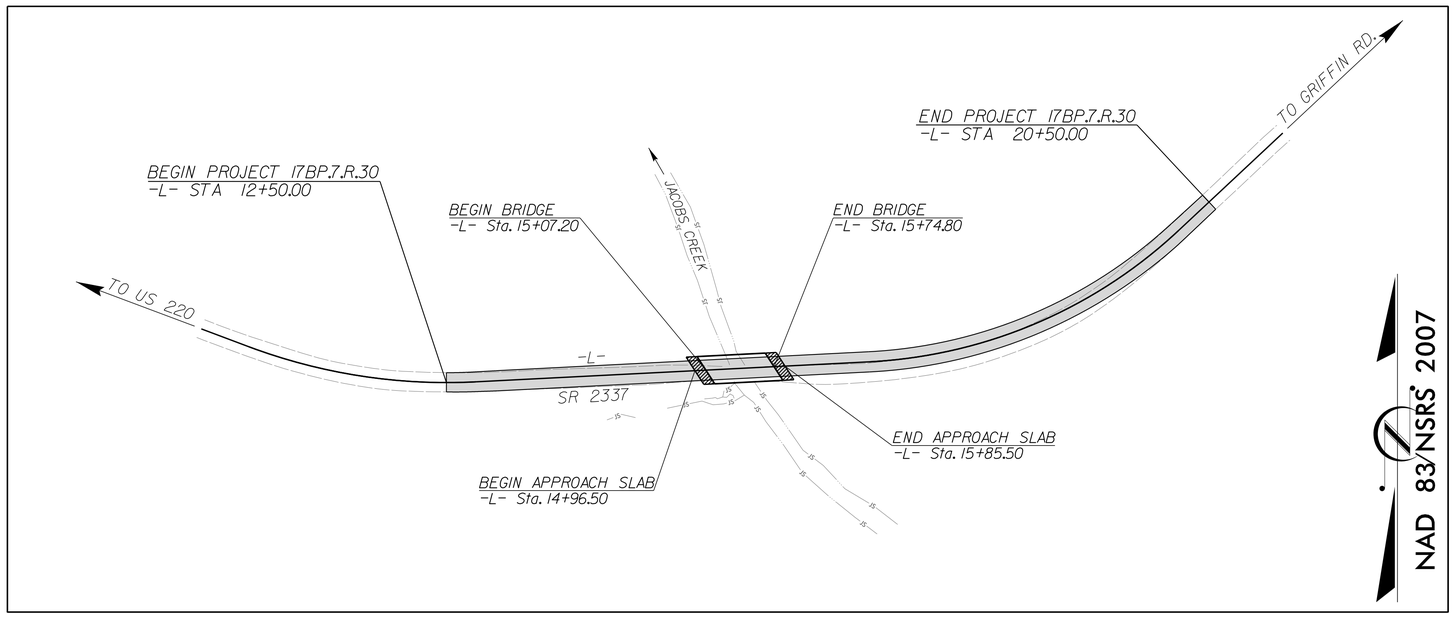

*DESIGN EXCEPTION:
SAG VERTICAL CURVE K
VERTICAL SSD

DOCUMENT NOT CONSIDERED FINAL
UNLESS ALL SIGNATURES COMPLETED

STATE OF NORTH CAROLINA DEPARTMENT OF TRANSPORTATION

DESIGN DATA

ADT 2010 = 210

V = 45 MPH

SUB REGIONAL TIER
LOCAL

PROJECT LENGTH

LENGTH ROADWAY TIP PROJECT	=	0.139 MILES
LENGTH STRUCTURE TIP PROJECT	=	0.013 MILES
TOTAL LENGTH TIP PROJECT	=	0.152 MILES

Prepared in the Office of Hatch Mott MacDonald for
DIVISION 7
NORTH CAROLINA DEPARTMENT OF TRANSPORTATION

2012 STANDARD SPECIFICATIONS

LETTING DATE:

TIM JORDAN, PE
PROJECT ENGINEER

GALEN CAIL, PE
HYDRAULICS ENGINEER

NCDOT CONTACT: TIM POWERS, PE
DIVISION BRIDGE PROGRAM MANAGER

ROADWAY DESIGN ENGINEER

NORTH CAROLINA PROFESSIONAL SEAL 21102 ENGINEER TIMOTHY JORDAN

DocuSigned by: James Timothy Jordan
0BE86A5414734D1...
4/18/2016
SIGNATURE: P.E.

HYDRAULICS ENGINEER

NORTH CAROLINA PROFESSIONAL SEAL 022000 ENGINEER GALEN CAIL

DocuSigned by: W. Galen Cail
06F097D904114D5...
4/19/2016
SIGNATURE: P.E.

PLANS PREPARED BY:

Hatch Mott MacDonald
P.O. Box 700
Fuquay-Varina, NC 27526
(919) 552-2253
(919) 552-2254 (Fax)
www.hatchmott.com
LICENSE NO. F-0669

4/18/2016
10:18:17 AM
R:\Roadway\Proj\7B0191_rdy_tsh.dgn
Jor66165

DocuSign Envelope ID: 19313705-1199-4A8A-B54A-3B7ED459EB8D

GENERAL NOTES:

2012 SPECIFICATIONS
EFFECTIVE: 01-17-12
REVISED: 07/30/12

GRADE LINE:
GRADING AND SURFACING:

THE GRADE LINES SHOWN DENOTE THE FINISHED ELEVATION OF THE PROPOSED SURFACING AT GRADE POINTS SHOWN ON THE TYPICAL SECTIONS. GRADE LINES MAY BE ADJUSTED AT THEIR BEGINNING AND ENDING AND AT STRUCTURES AS DIRECTED BY THE ENGINEER IN ORDER TO SECURE A PROPER TIE-IN.

CLEARING:

CLEARING ON THIS PROJECT SHALL BE PERFORMED TO THE LIMITS ESTABLISHED BY METHOD II.

SUPERELEVATION:

ALL CURVES ON THIS PROJECT SHALL BE SUPERELEVATED IN ACCORDANCE WITH STD. NO. 225.04 USING THE RATE OF SUPERELEVATION AND RUNOFF SHOWN ON THE PLANS. SUPERELEVATION IS TO BE REVOLVED ABOUT THE GRADE POINTS SHOWN ON THE TYPICAL SECTIONS.

SHOULDER CONSTRUCTION:

ASPHALT, EARTH, AND CONCRETE SHOULDER CONSTRUCTION ON THE HIGH SIDE OF SUPERELEVATED CURVES SHALL BE IN ACCORDANCE WITH STD. NO. 560.01.

GUARDRAIL:

THE GUARDRAIL LOCATIONS SHOWN ON THE PLANS MAY BE ADJUSTED DURING CONSTRUCTION AS DIRECTED BY THE ENGINEER. THE CONTRACTOR SHOULD CONSULT WITH THE ENGINEER PRIOR TO ORDERING GUARDRAIL MATERIAL.

SUBSURFACE PLANS:

NO SUBSURFACE PLANS ARE AVAILABLE ON THIS PROJECT. THE CONTRACTOR SHOULD MAKE HIS OWN INVESTIGATION AS TO THE SUBSURFACE CONDITIONS.

END BENTS:

THE ENGINEER SHALL CHECK THE STRUCTURE END BENT PLANS, DETAILS, AND CROSS-SECTION PRIOR TO SETTING OF THE SLOPE STAKES FOR THE EMBANKMENT OR EXCAVATION APPROACHING A BRIDGE.

UTILITIES:

UTILITY OWNERS ON THIS PROJECT ARE ENERGY UNITED EMC, CENTURY LINK, AND TIME WARNER CABLE.

ANY RELOCATION OF EXISTING UTILITIES WILL BE ACCOMPLISHED BY OTHERS.

RIGHT-OF-WAY MARKERS:

ALL RIGHT-OF-WAY MARKERS ON THIS PROJECT SHALL BE PLACED BY OTHERS.

INDEX OF SHEETS

SHEET NUMBER	DESCRIPTION
1	TITLE SHEET
1-A	INDEX OF SHEETS, GENERAL NOTES, AND LIST OF STANDARD DRAWINGS
1-B	CONVENTIONAL SYMBOLS
2	PAVEMENT SCHEDULE AND TYPICAL SECTIONS
2-A	DETAIL FOR STRUCTURE ANCHOR UNITS
4	PLAN SHEET AND PROFILE SHEET
TMP-1 THRU TMP-3	TRAFFIC MANAGEMENT PLANS
EC-1 THRU EC-5	EROSION CONTROL PLANS
UO-1	UTILITIES BY OTHERS PLAN
X-1 THRU X-4	CROSS-SECTIONS
S-1 THRU S-15	STRUCTURE PLANS

2012 ROADWAY ENGLISH STANDARD DRAWINGS

The following Roadway Standards as appear in "Roadway Standard Drawings" Highway Design Branch - N. C. Department of Transportation - Raleigh, N. C., Dated January, 2012 are applicable to this project and by reference hereby are considered a part of these plans:

STD.NO.	TITLE
DIVISION 2 - EARTHWORK	
200.02	Method of Clearing - Method II
225.02	Guide for Grading Subgrade - Secondary and Local
225.04	Method of Obtaining Superelevation - Two Lane Pavement
DIVISION 3 - PIPE CULVERTS	
300.01	Method of Pipe Installation
310.10	Driveway Pipe Construction
DIVISION 4 - MAJOR STRUCTURES	
422.11	Reinforced Bridge Approach Fills - Sub Regional Tier
DIVISION 5 - SUBGRADE, BASES AND SHOULDERS	
560.01	Method of Shoulder Construction - High Side of Superelevated Curve - Method I
DIVISION 8 - INCIDENTALS	
840.00	Concrete Base Pad for Drainage Structures
840.22	Frames and Wide Slot Sag Grates
840.25	Anchorage for Frames - Brick or Concrete or Precast
840.29	Frames and Narrow Slot Flat Grates
840.35	Traffic Bearing Grated Drop Inlet - for Cast Iron Double Frame and Grates
840.46	Traffic Bearing Precast Drainage Structure
840.66	Drainage Structure Steps
840.72	Pipe Collar
846.01	Concrete Curb, Gutter and Curb & Gutter
846.04	Drop Inlet Installation in Shoulder Berm Gutter
862.01	Guardrail Placement
862.02	Guardrail Installation
876.01	Rip Rap in Channels
876.02	Guide for Rip Rap at Pipe Outlets

PROJECT REFERENCE	SHEET NO.
17BP.7.R.30 - ROCKINGHAM #191	1-A

ROADWAY DESIGN ENGINEER

NORTH CAROLINA PROFESSIONAL SEAL 27102 ENGINEER JAMES TIMOTHY JORDAN

DocuSigned by:
4/12/2016

HATCH MOTT MACDONALD I & E, LLC
LICENSE NO. F-0669

DOCUMENT NOT CONSIDERED FINAL UNLESS ALL SIGNATURES COMPLETED

Prepared in the Office of: Hatch Mott MacDonald PO Box 700 Fuquay-Varina, NC 27526 www.hatchmott.com

jor66165
R:\Roadway\Proj\7B0191_rdy_pshtA.dgn
4/12/2016 11:26:13 AM

DocuSign Envelope ID: 19313705-1199-4A8A-B54A-3B7ED459EB8D

PROJECT REFERENCE	SHEET NO.
17BP.7.R.30 – ROCKINGHAM #191	1–B

Note: Not to Scale

****S.U.E. = Subsurface Utility Engineering***

STATE OF NORTH CAROLINA
DIVISION OF HIGHWAYS

CONVENTIONAL PLAN SHEET SYMBOLS

BOUNDARIES AND PROPERTY:

- State Line
- County Line
- Township Line
- City Line
- Reservation Line
- Property Line
- Existing Iron Pin — EIP
- Property Corner
- Property Monument — ECM
- Parcel/Sequence Number — 123
- Existing Fence Line
- Proposed Woven Wire Fence
- Proposed Chain Link Fence
- Proposed Barbed Wire Fence
- Existing Wetland Boundary — WLB
- Proposed Wetland Boundary — WLB
- Existing Endangered Animal Boundary — EAB
- Existing Endangered Plant Boundary — EPB
- Known Soil Contamination: Area or Site
- Potential Soil Contamination: Area or Site

BUILDINGS AND OTHER CULTURE:

- Gas Pump Vent or U/G Tank Cap
- Sign — S
- Well — W
- Small Mine
- Foundation
- Area Outline
- Cemetery
- Building
- School
- Church
- Dam

HYDROLOGY:

- Stream or Body of Water
- Hydro, Pool or Reservoir
- Jurisdictional Stream — JS
- Buffer Zone 1 — BZ 1
- Buffer Zone 2 — BZ 2
- Flow Arrow
- Disappearing Stream
- Spring
- Wetland
- Proposed Lateral, Tail, Head Ditch — FLOW
- False Sump

RAILROADS:

- Standard Gauge — CSX TRANSPORTATION
- RR Signal Milepost — MILEPOST 35
- Switch — SWITCH
- RR Abandoned
- RR Dismantled

RIGHT OF WAY:

- Baseline Control Point
- Existing Right of Way Marker
- Existing Right of Way Line
- Proposed Right of Way Line — RW
- Proposed Right of Way Line with Iron Pin and Cap Marker — RW
- Proposed Right of Way Line with Concrete or Granite R/W Marker — RW
- Proposed Control of Access Line with Concrete C/A Marker — CA
- Existing Control of Access — CA
- Proposed Control of Access — CA
- Existing Easement Line — E
- Proposed Temporary Construction Easement — E
- Proposed Temporary Drainage Easement — TDE
- Proposed Permanent Drainage Easement — PDE
- Proposed Permanent Drainage / Utility Easement — DUE
- Proposed Permanent Utility Easement — PUE
- Proposed Temporary Utility Easement — TUE
- Proposed Aerial Utility Easement — AUE
- Proposed Permanent Easement with Iron Pin and Cap Marker

ROADS AND RELATED FEATURES:

- Existing Edge of Pavement
- Existing Curb
- Proposed Slope Stakes Cut — C
- Proposed Slope Stakes Fill — F
- Proposed Curb Ramp — CR
- Existing Metal Guardrail
- Proposed Guardrail
- Existing Cable Guiderail
- Proposed Cable Guiderail
- Equality Symbol
- Pavement Removal

VEGETATION:

- Single Tree
- Single Shrub
- Hedge
- Woods Line
- Orchard
- Vineyard — Vineyard

EXISTING STRUCTURES:

MAJOR:

- Bridge, Tunnel or Box Culvert — CONC
- Bridge Wing Wall, Head Wall and End Wall — CONC WW

MINOR:

- Head and End Wall — CONC HW
- Pipe Culvert
- Footbridge
- Drainage Box: Catch Basin, DI or JB — CB
- Paved Ditch Gutter
- Storm Sewer Manhole — S
- Storm Sewer — S

UTILITIES:

POWER:

- Existing Power Pole
- Proposed Power Pole
- Existing Joint Use Pole
- Proposed Joint Use Pole
- Power Manhole — P
- Power Line Tower
- Power Transformer
- U/G Power Cable Hand Hole
- H–Frame Pole
- Recorded U/G Power Line — P
- Designated U/G Power Line (S.U.E.*) — P

TELEPHONE:

- Existing Telephone Pole
- Proposed Telephone Pole
- Telephone Manhole — T
- Telephone Booth
- Telephone Pedestal — T
- Telephone Cell Tower
- U/G Telephone Cable Hand Hole — HH
- Recorded U/G Telephone Cable — T
- Designated U/G Telephone Cable (S.U.E.*) — T
- Recorded U/G Telephone Conduit — TC
- Designated U/G Telephone Conduit (S.U.E.*) — TC
- Recorded U/G Fiber Optics Cable — T FO
- Designated U/G Fiber Optics Cable (S.U.E.*) — T FO

WATER:

- Water Manhole — W
- Water Meter
- Water Valve
- Water Hydrant
- Recorded U/G Water Line
- Designated U/G Water Line (S.U.E.*) — W
- Above Ground Water Line — A/G Water

TV:

- TV Satellite Dish
- TV Pedestal — C
- TV Tower
- U/G TV Cable Hand Hole — HH
- Recorded U/G TV Cable — TV
- Designated U/G TV Cable (S.U.E.*) — TV
- Recorded U/G Fiber Optic Cable — TV FO
- Designated U/G Fiber Optic Cable (S.U.E.*) — TV FO

GAS:

- Gas Valve
- Gas Meter
- Recorded U/G Gas Line — G
- Designated U/G Gas Line (S.U.E.*) — G
- Above Ground Gas Line — A/G Gas

SANITARY SEWER:

- Sanitary Sewer Manhole
- Sanitary Sewer Cleanout
- U/G Sanitary Sewer Line — SS
- Above Ground Sanitary Sewer — A/G Sanitary Sewer
- Recorded SS Forced Main Line — FSS
- Designated SS Forced Main Line (S.U.E.*) — FSS

MISCELLANEOUS:

- Utility Pole
- Utility Pole with Base
- Utility Located Object
- Utility Traffic Signal Box — S
- Utility Unknown U/G Line — ?UTL
- U/G Tank; Water, Gas, Oil
- Underground Storage Tank, Approx. Loc. — UST
- A/G Tank; Water, Gas, Oil
- Geoenvironmental Boring
- U/G Test Hole (S.U.E.*)
- Abandoned According to Utility Records — AATUR
- End of Information — E.O.I.

jor66165
R:\RoadwayProj\780191_rdy_pshlB.dgn
4/12/2016 11:26:15 AM

DocuSign Envelope ID: 19313705-1199-4A8A-B54A-3B7ED459EB8D

PROJECT REFERENCE	SHEET NO.
17BP.7.R.30 – ROCKINGHAM #191	2

ROADWAY DESIGN ENGINEER

NORTH CAROLINA PROFESSIONAL SEAL 21102 ENGINEER TIMOTHY JORDAN

DocuSigned by: Timothy Jordan 4/19/2016

HATCH MOTT MACDONALD I & E, LLC
LICENSE NO. F-0669

DOCUMENT NOT CONSIDERED FINAL UNLESS ALL SIGNATURES COMPLETED

Prepared in the Office of: Hatch Mott MacDonald PO Box 700 Fuquay-Varina, NC 27526 www.hatchmott.com

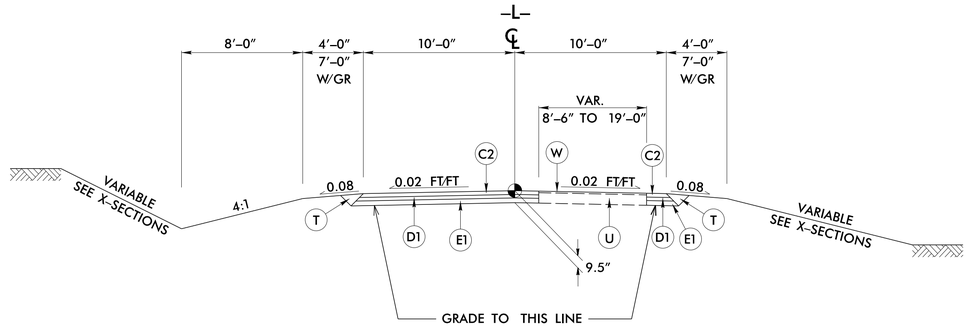

TYPICAL SECTION NO. 1

TRANSITION FROM EXISTING TO TYPICAL SECTION NO. 1:
–L– STA 12+50.00 TO 13+00.00

USE TYPICAL SECTION NO. 1:
–L– STA 13+00.00 TO 15+07.20 (BEGIN BRIDGE)
–L– STA 16+45.00 TO 20+00.00

TRANSITION FROM TYPICAL SECTION NO. 1 TO EXISTING:
–L– STA 20+00.00 TO 20+50.00

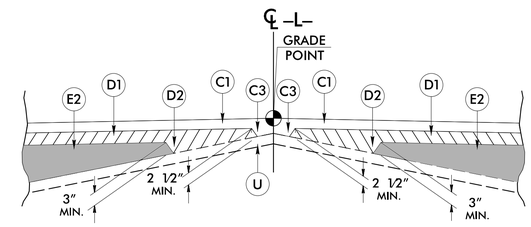

DETAIL SHOWING METHOD OF WEDGING

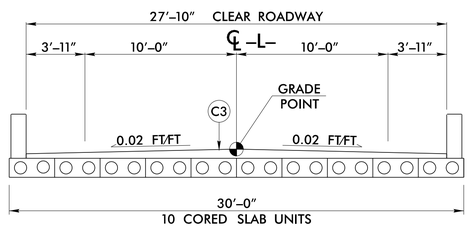

TYPICAL SECTION NO. 2

USE TYPICAL SECTION NO. 2:
–L– STA 15+07.20 (BEGIN BRIDGE) TO 15+74.80 (END BRIDGE)

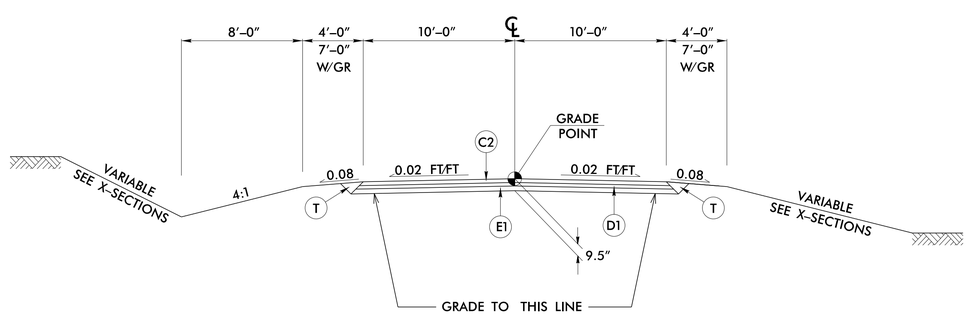

TYPICAL SECTION NO. 2

USE TYPICAL SECTION NO. 2:
–L– STA 15+74.80 (END BRIDGE) TO 16+45.00

PAVEMENT SCHEDULE

C1	PROP. APPROX. 1½″ ASPHALT CONCRETE SURFACE COURSE, TYPE S9.5B, AT AN AVERAGE RATE OF 168 LBS. PER SQ. YD.
C2	PROP. APPROX. 3″ ASPHALT CONCRETE SURFACE COURSE, TYPE S9.5B, AT AN AVERAGE RATE OF 168 LBS. PER SQ. YD. IN EACH OF TWO LAYERS.
C3	PROP. VAR. DEPTH ASPHALT CONCRETE SURFACE COURSE, TYPE S9.5B, AT AN AVERAGE RATE OF 112 LBS. PER SQ. YD. PER 1″ DEPTH. TO BE PLACED IN LAYERS NOT LESS THAN 1½″ IN DEPTH OR GREATER THAN 2″ IN DEPTH.
D1	PROP. APPROX. 2½″ ASPHALT CONCRETE INTERMEDIATE COURSE, TYPE I19.0B, AT AN AVERAGE RATE OF 285 LBS. PER SQ. YD.
D2	PROP. VAR. DEPTH ASPHALT CONCRETE INTERMEDIATE COURSE, TYPE I19.0B, AT AN AVERAGE RATE OF 114 LBS. PER SQ. YD. PER 1″ DEPTH, TO BE PLACED IN LAYERS NOT LESS THAN 2½″ IN DEPTH OR GREATER THAN 4″ IN DEPTH.
E1	PROP. APPROX. 4″ ASPHALT CONCRETE BASE COURSE, TYPE B25.0B, AT AN AVERAGE RATE OF 456 LBS. PER SQ. YD.
E2	PROP. VAR. DEPTH ASPHALT CONCRETE BASE COURSE, TYPE B25.0B, AT AN AVERAGE RATE OF 114 LBS. PER SQ. YD. PER 1″ DEPTH TO BE PLACED IN LAYERS NOT LESS THAN 3″ IN DEPTH OR GREATER THAN 5½″ IN DEPTH.
T	EARTH MATERIAL.
U	EXISTING PAVEMENT.
W	WEDGING (SEE DETAIL SHOWING METHOD OF WEDGING).

NOTE: PAVEMENT EDGE SLOPES ARE 1:1 UNLESS SHOWN OTHERWISE.

jor66165
R:\Roadway\Proj\780191_rdy_typ.dgn
4/12/2016 11:26:17 AM

$$$$$$SYSTIME$$$$
$$$$$$$$$$$$$$$$DGN$$$$$$$$$$$$$$$$
$$$$USERNAME$$$$

STATE OF
NORTH CAROLINA
DEPT. OF TRANSPORTATION
DIVISION OF HIGHWAYS
RALEIGH, N.C.

ENGLISH DETAIL DRAWING FOR
STRUCTURE ANCHOR UNITS
GUARDRAIL ANCHOR UNIT, TYPE III FOR ATTACHMENT TO
RAIL ON BRIDGE - SUB REGIONAL TIER

SHEET 2 OF 7
862d03

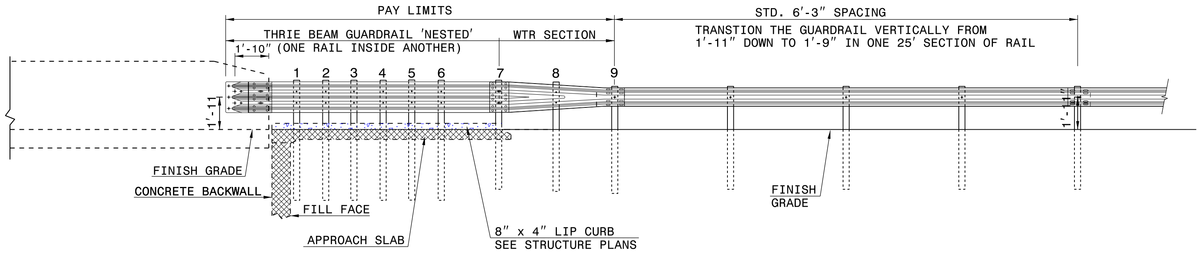

ELEVATION

NOTE:
- **POST NOT REQUIRED FOR SKEW ANGLES GREATER THAN 150° OR LESS THAN 30° UNLESS OTHERWISE DIRECTED BY THE ENGINEER.
- *THE DISTANCE FROM END OF BRIDGE RAIL TO CENTER LINE OF THE FIRST POST SHOULD BE 11½" IF CONCRETE BACKWALL IS NOT PRESENT.
- -SHOULDER BERM GUTTER MUST BE INSTALLED TO THE LIMITS 8" x 4" LIP CURB IS SHOWN IF ANCHOR UNIT IS NOT ADJACENT TO AN APPROACH SLAB.
- -MEASURE GUARDRAIL HEIGHT FROM THE TOP OF ADJACENT SURFACE (SHOULDER, BERM, OR GUTTER).
- -LAP JOINTS IN THE DIRECTION OF TRAFFIC FLOW.
- -SEE SHEET 5 FOR POST SECTIONS 1 THRU 9.

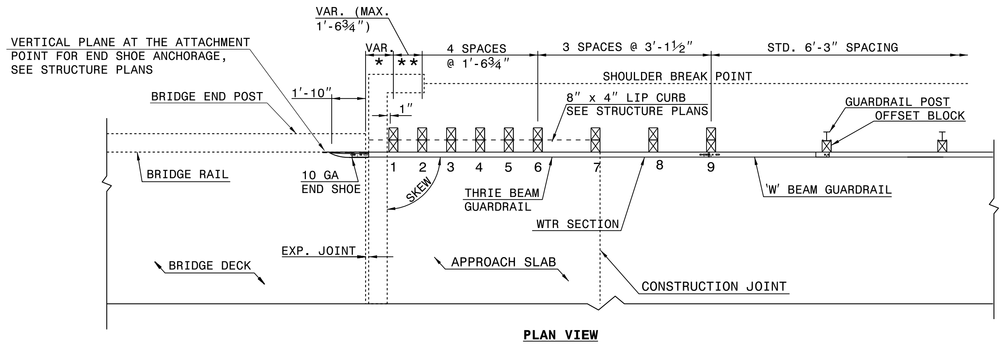

PLAN VIEW

GUARDRAIL ANCHOR UNIT, TYPE III FOR ATTACHMENT TO RAIL ON BRIDGE - SUB REGIONAL TIER

STATE OF
NORTH CAROLINA
DEPT. OF TRANSPORTATION
DIVISION OF HIGHWAYS
RALEIGH, N.C.

ENGLISH DETAIL DRAWING FOR
STRUCTURE ANCHOR UNITS
GUARDRAIL ANCHOR UNIT, TYPE III FOR ATTACHMENT TO
RAIL ON BRIDGE - SUB REGIONAL TIER

SHEET 2 OF 7
862d03

STATE OF
NORTH CAROLINA
DEPT. OF TRANSPORTATION
DIVISION OF HIGHWAYS
RALEIGH, N.C.

ENGLISH DETAIL DRAWING FOR
STRUCTURE ANCHOR UNITS
GUARDRAIL ANCHOR UNIT, TYPE III

SHEET 3 OF 7
862d03

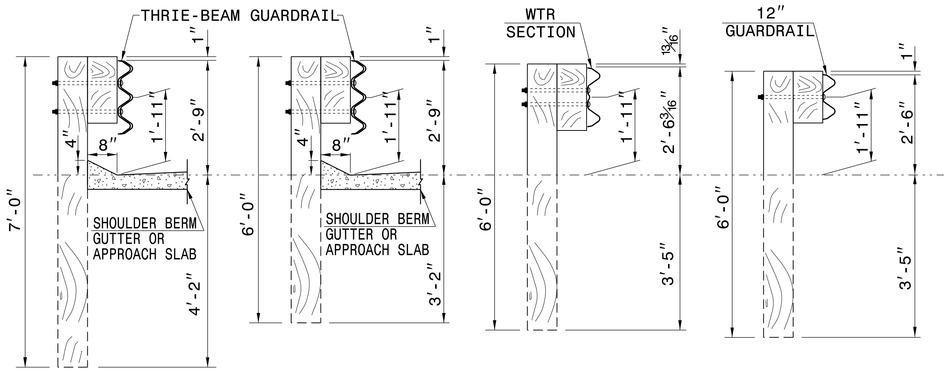

SECTION OF THRIE BEAM POSTS 1 THRU 6

SECTION OF THRIE BEAM POST 7

SECTION OF WTR BEAM POST 8

SECTION OF 'W' BEAM POST 9

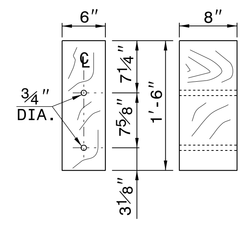

THRIE BEAM OFFSET BLOCK

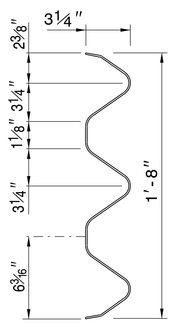

THRIE-BEAM SECTION

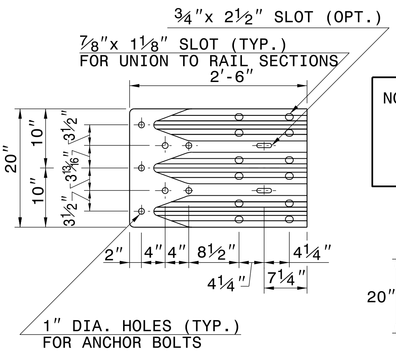

END SHOE

NOTE: THE MID POST AND OFFSET BLOCK OF THE WTR SECTION WILL REQUIRE SPECIAL BOLT HOLE DRILLING IN THE THRIE BEAM OFFSET BLOCK AND LINE POST.

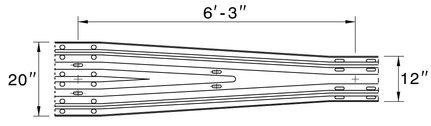

WTR SECTION
ELEVATION VIEW

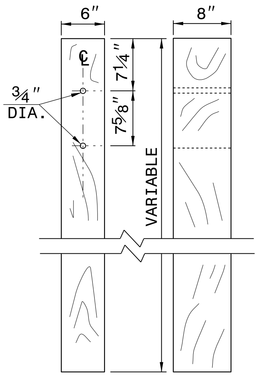

THRIE BEAM LINE POST

STATE OF
NORTH CAROLINA
DEPT. OF TRANSPORTATION
DIVISION OF HIGHWAYS
RALEIGH, N.C.

ENGLISH DETAIL DRAWING FOR
STRUCTURE ANCHOR UNITS
GUARDRAIL ANCHOR UNIT, TYPE III

SHEET 3 OF 7
862d03

CONTRACT STANDARDS AND DEVELOPMENT UNIT
Office 919-707-6950 FAX 919-250-4119

SEE TITLE BLOCK

ORIGINAL BY: J. HOWERTON DATE: 06-22-12
MODIFIED BY: DATE:
CHECKED BY: DATE:
FILE SPEC.:

PROJECT REFERENCE NO.
17BP.7.R.30 - ROCKINGHAM #191

SHEET NO.
2 - A

DocuSign Envelope ID: 19313705-1199-4A8A-B54A-3B7ED459EB8D

PROJECT REFERENCE	SHEET NO.
17BP.7.R.30 – ROCKINGHAM #191	4

ROADWAY DESIGN ENGINEER — SEAL 21102 — 4/19/2016 — TIMOTHY JORDAN WOOD, P.E.

HYDRAULICS ENGINEER — SEAL 022000 — 4/19/2016 — ALEN CILL

HATCH MOTT MACDONALD I & E, LLC
LICENSE NO. F-0669

DOCUMENT NOT CONSIDERED FINAL UNLESS ALL SIGNATURES COMPLETED

Prepared in the Office of: Hatch Mott MacDonald, PO Box 700, Fuquay-Varina, NC 27526, www.hatchmott.com

VERTICAL SCALE 5' 0 5' 10' — HORIZONTAL SCALE 25' 0 25' 50'

*DESIGN EXCEPTION:
SAG VERTICAL CURVE K
VERTICAL SSD

DETAIL A
SPECIAL CUT DITCH
(Not to Scale)

Natural Ground — VAR TO 2:1 — D — d — 2:1 or Flatter — Front Ditch Slope

Type of Liner = PSRM — Min. D = 0.5 Ft — Max d = 0.5 Ft

–L– STA. 13+20 TO 14+85 LT
–L– STA. 15+50 TO 17+00 LT

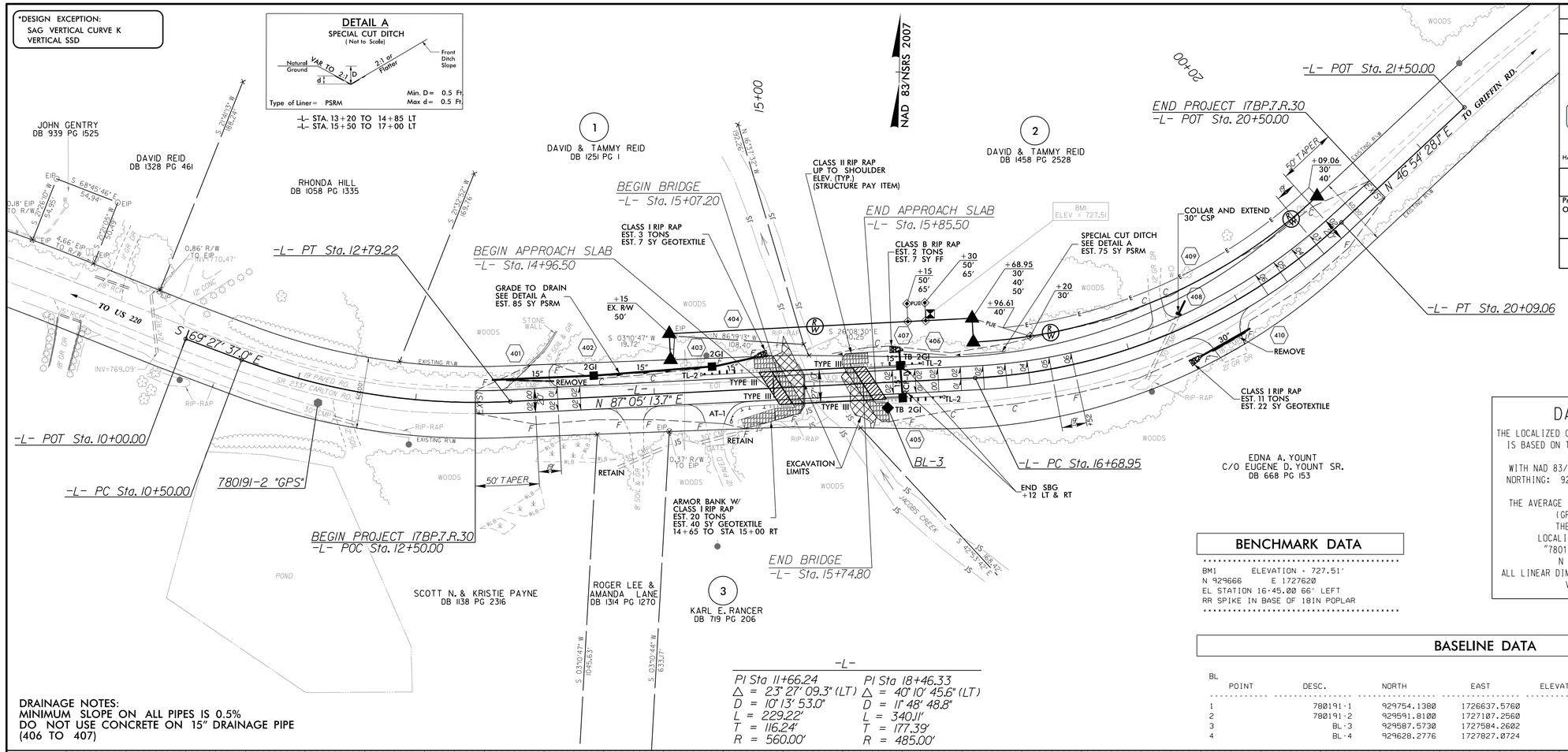

DRAINAGE NOTES:
MINIMUM SLOPE ON ALL PIPES IS 0.5%
DO NOT USE CONCRETE ON 15" DRAINAGE PIPE
(406 TO 407)

DATUM DESCRIPTION

THE LOCALIZED COORDINATE SYSTEM DEVELOPED FOR THIS PROJECT IS BASED ON THE STATE PLANE COORDINATES ESTABLISHED BY NCDOT FOR MONUMENT "780191-2"
WITH NAD 83/NSRS 2007 STATE PLANE GRID COORDINATES OF
NORTHING: 929591.8100(ft) EASTING: 1727107.2560(ft)
ELEVATION: 762.71'(ft)
THE AVERAGE COMBINED GRID FACTOR USED ON THIS PROJECT (GROUND TO GRID) IS: 0.9999911984
THE N.C. LAMBERT GRID BEARING AND LOCALIZED HORIZONTAL GROUND DISTANCE FROM "780191-2" TO -L- STATION 10+00.00 IS
N 64° 13' 52.9" W 122.99 (ft)
ALL LINEAR DIMENSIONS ARE LOCALIZED HORIZONTAL DISTANCES
VERTICAL DATUM USED IS NAVD 88

BENCHMARK DATA

BMI ELEVATION - 727.51'
N 929666 E 1727620
EL STATION 16+45.00 66' LEFT
RR SPIKE IN BASE OF 18IN POPLAR

BASELINE DATA

BL POINT	DESC.	NORTH	EAST	ELEVATION	BL STATION	OFFSET
1	780191-1	929754.1380	1726637.5760	805.91	5+00.00	0.00
2	780191-2	929591.8100	1727107.2560	762.71	9+96.94	0.00
3	BL-3	929587.5730	1727584.2602	728.35	14+73.96	0.00
4	BL-4	929628.2776	1727827.0724	741.88	17+20.16	0.00

-L-

PI Sta 11+66.24	PI Sta 18+46.33
Δ = 23° 27' 09.3" (LT)	Δ = 40° 10' 45.6" (LT)
D = 10° 13' 53.0"	D = 11° 48' 48.8"
L = 229.22'	L = 340.11'
T = 116.24'	T = 177.39'
R = 560.00'	R = 485.00'

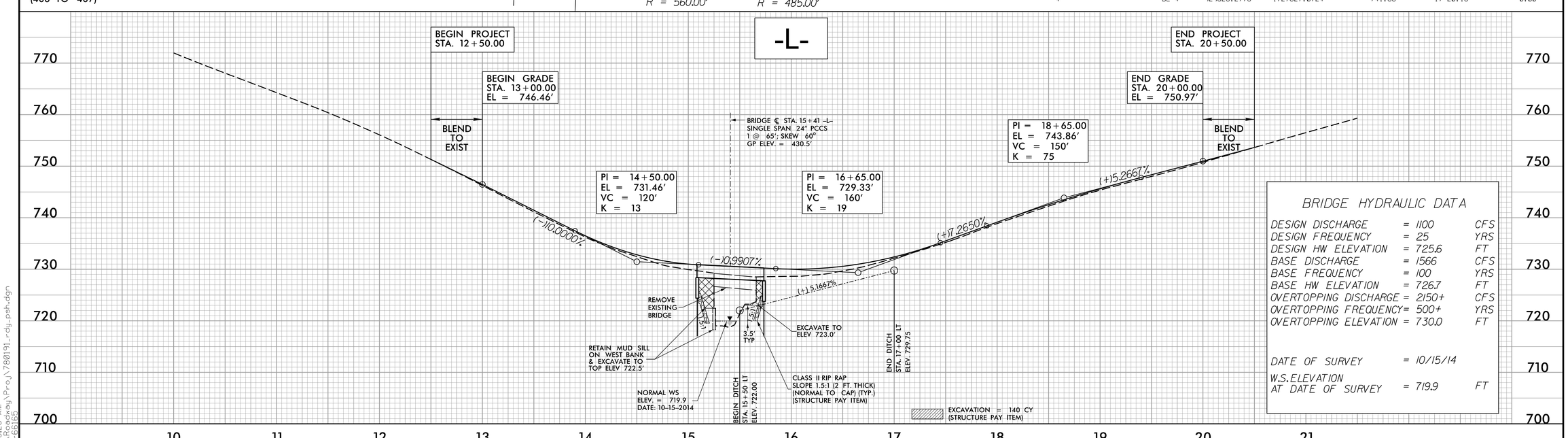

BRIDGE HYDRAULIC DATA

DESIGN DISCHARGE	= 1100	CFS
DESIGN FREQUENCY	= 25	YRS
DESIGN HW ELEVATION	= 725.6	FT
BASE DISCHARGE	= 1566	CFS
BASE FREQUENCY	= 100	YRS
BASE HW ELEVATION	= 726.7	FT
OVERTOPPING DISCHARGE	= 2150+	CFS
OVERTOPPING FREQUENCY	= 500+	YRS
OVERTOPPING ELEVATION	= 730.0	FT
DATE OF SURVEY	= 10/15/14	
W.S. ELEVATION AT DATE OF SURVEY	= 719.9	FT

4/12/2016
11:26:26 AM
R:\Roadway\Proj\780191_rdy_psh.dgn
ar6616s

DocuSign Envelope ID: 19313705-1199-4A8A-B54A-3B7ED459EB8D

THE FOLLOWING ROADWAY STANDARDS AS APPEAR IN "ROADWAY STANDARD DRAWINGS" – HIGHWAY DESIGN BRANCH– N.C. DEPARTMENT OF TRANSPORTATION – RALEIGH, N.C., DATED JANUARY 2012 ARE APPLICABLE TO THIS PROJECT AND BY REFERENCE HEREBY ARE CONSIDERED A PART OF THESE PLANS:

STD.	TITLE
1101.03	TEMPORARY ROAD CLOSURES
1110.01	STATIONARY WORK ZONE SIGNS
1145.01	BARRICADES
1205.01	PAVEMENT MARKINGS – LINE TYPES AND OFFSETS
1205.02	PAVEMENT MARKINGS – TWO–LANE AND MULTI–LANE ROADWAYS
1205.12	PAVEMENT MARKINGS – BRIDGES
1261.01	GUARDRAIL AND BARRIER DELINEATORS – INSTALLATION SPACING
1261.02	GUARDRAIL AND BARRIER DELINEATORS – TYPES AND MOUNTING
1262.01	GUARDRAIL END DELINEATION

GENERAL NOTES

CHANGES MAY BE REQUIRED WHEN PHYSICAL DIMENSIONS IN THE DETAIL DRAWINGS, STANDARD DETAILS, AND ROADWAY DETAILS ARE NOT ATTAINABLE TO MEET FIELD CONDITIONS OR RESULT IN DUPLICATE OR UNDESIRED OVERLAPPING OF DEVICES. MODIFICATION MAY INCLUDE: MOVING, SUPPLEMENTING, COVERING, OR REMOVAL OF DEVICES AS DIRECTED BY THE ENGINEER.

THE FOLLOWING GENERAL NOTES APPLY AT ALL TIMES FOR THE DURATION OF THE CONSTRUCTION PROJECT EXCEPT WHEN OTHERWISE NOTED IN THE PLAN OR DIRECTED BY THE ENGINEER.

TRAFFIC PATTERN ALTERATIONS

A) NOTIFY THE ENGINEER TWENTY ONE (21) CALENDAR DAYS PRIOR TO ANY TRAFFIC PATTERN ALTERATION.

SIGNING

B) PROVIDE PERMANENT SIGNING.

C) PROVIDE SIGNING AND DEVICES REQUIRED TO CLOSE THE ROAD ACCORDING TO THE ROADWAY STANDARD DRAWINGS AND TRAFFIC CONTROL PLANS.

PROVIDE SIGNING REQUIRED FOR THE OFF–SITE DETOUR ROUTE AS SHOWN IN THE TRAFFIC CONTROL PLANS.

D) COVER OR REMOVE ALL SIGNS AND DEVICES REQUIRED TO CLOSE THE ROAD WHEN ROAD CLOSURE IS NOT IN OPERATION.

COVER OR REMOVE ALL SIGNS REQUIRED FOR THE OFF–SITE DETOUR WHEN THE DETOUR IS NOT IN OPERATION.

E) ENSURE ALL NECESSARY SIGNING IS IN PLACE PRIOR TO ALTERING ANY TRAFFIC PATTERN.

TRAFFIC CONTROL DEVICES

F) PLACE TYPE III BARRICADES, WITH "ROAD CLOSED" SIGN R11–2 ATTACHED, OF SUFFICIENT LENGTH TO CLOSE ENTIRE ROADWAY.

PAVEMENT MARKINGS AND MARKERS

G) INSTALL PAVEMENT MARKINGS ON THE FINAL SURFACE.

PROJECT REFERENCE	SHEET NO.
17BP.7.R.30 – ROCKINGHAM #191	TMP–1

ROADWAY DESIGN ENGINEER

NORTH CAROLINA PROFESSIONAL SEAL 21102 ENGINEER TIMOTHY JORDAN

DocuSigned by: Timothy Jordan
4/19/2016

HATCH MOTT MACDONALD I & E, LLC
LICENSE NO. F–0669

DOCUMENT NOT CONSIDERED FINAL UNLESS ALL SIGNATURES COMPLETED

Prepared in the Office of: Hatch Mott MacDonald PO Box 700 Fuquay-Varina, NC 27526 www.hatchmott.com

PHASING

STEP 1: USING ROADWAY STANDARD DRAWING NUMBER 1101.03, SHEET 1 OF 9, AND SHEET TMP–2, PERFORM THE FOLLOWING:
– INSTALL ALL ROAD CLOSURE AND DETOUR SIGNING INCLUDING BARRICADES
– CLOSE SR 2337 (CARLTON ROAD)
– PLACE TRAFFIC ONTO OFF– SITE DETOUR

STEP 2: REMOVE EXISTING BRIDGE #191 AND CONSTRUCT THE PROPOSED BRIDGE AND APPROACHES AS SHOWN IN THE CONSTRUCTION PLANS.

STEP 3: INSTALL FINAL PAVEMENT MARKINGS.

STEP 4: REMOVE ALL TRAFFIC CONTROL SIGNING AND DEVICES AND RE–OPEN SR 2337 (CARLTON ROAD) TO THE FINAL TRAFFIC PATTERN.

PAVEMENT MARKING

PAINT WHITE EDGELINE (4")	1,600 LF
PAINT YELLOW DOUBLE CENTER (4")	1,600 LF

NOTE: QUANTITY INCLUDES 2 APPLICATIONS OF EACH

jor66165
R:\Roadway\Proj\78019_rdy_tmp.dgn
4/12/2016 11:26:29 AM

DocuSign Envelope ID: 19313705-1199-4A8A-B54A-3B7ED459EB8D

PROJECT REFERENCE	SHEET NO.
17BP.7.R.30 – ROCKINGHAM #191	TMP–2

ROADWAY DESIGN ENGINEER

NORTH CAROLINA PROFESSIONAL SEAL 21102 ENGINEER JAMES TIMOTHY JOHNSON

Docu Sign Envelope ID: 19313705-1199-4A8A-B54A-3B7ED459EB8D

James Timothy Johnson
4/18/2016

HATCH MOTT MACDONALD I & E, LLC
LICENSE NO. F-0669

DOCUMENT NOT CONSIDERED FINAL UNLESS ALL SIGNATURES COMPLETED

Prepared in the Office of: Hatch Mott MacDonald PO Box 700 Fuquay-Varina, NC 27526 www.hatchmott.com

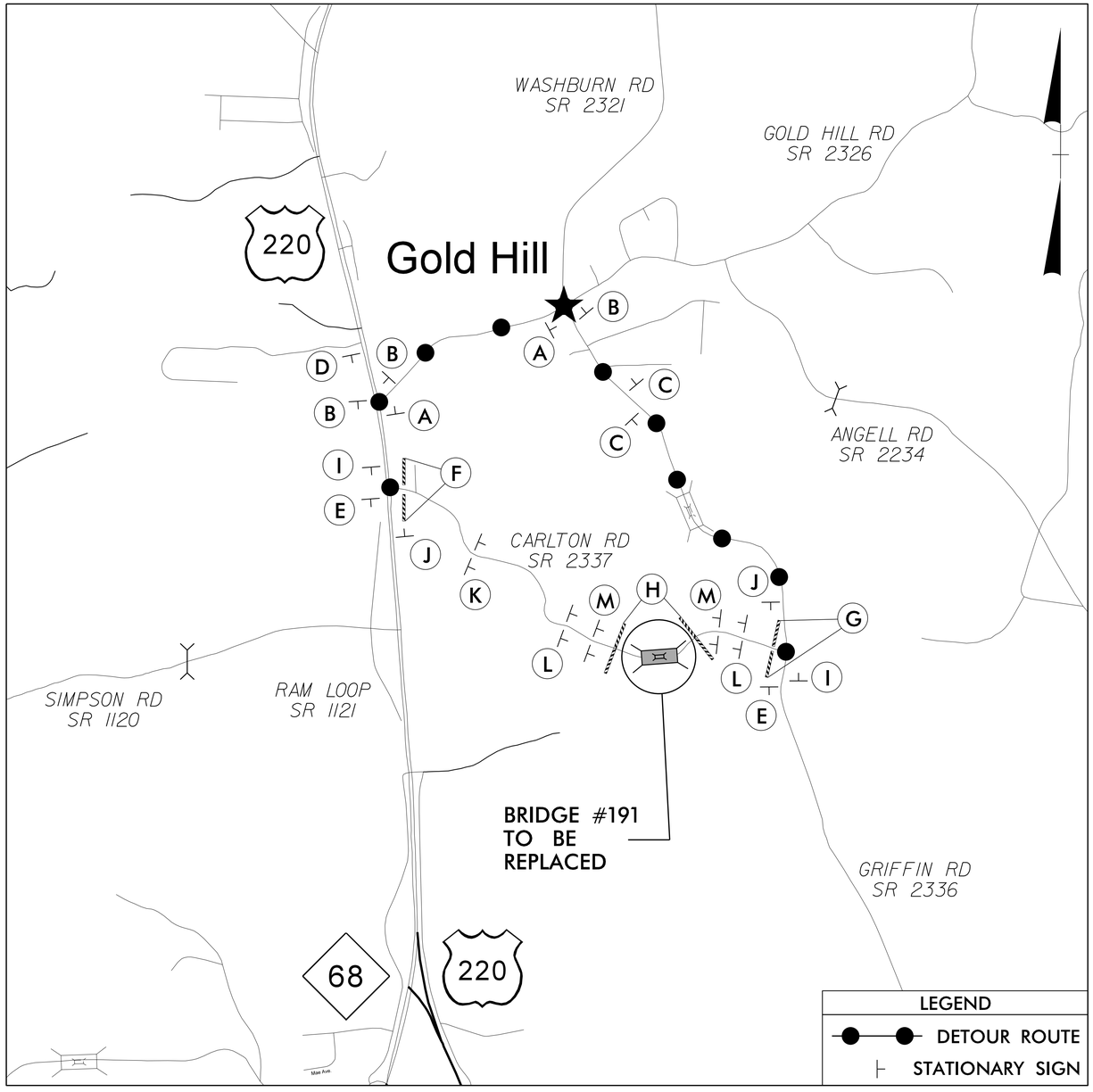

✱ SEE SHEET TMP–3 FOR SPECIAL SIGN DESIGNS

✱ CARLTON ROAD
DETOUR
M4–8 24″ X 12″
M6–1 R 21″ X 15″
(A)

✱ CARLTON ROAD
DETOUR
M4–8 24″ X 12″
M6–1 L 21″ X 15″
(B)

✱ CARLTON ROAD
DETOUR
M4–8 24″ X 12″
M6–3 21″ X 15″
(C)

✱ CARLTON ROAD
DETOUR
M4–8 24″ X 12″
NEXT LEFT
SP–4L 42″ X 12″
(D)

END DETOUR
M4–8 A 24″ X 18″
(E)

R11-3 60″ x 30″
ROAD CLOSED
1 MILE AHEAD
LOCAL TRAFFIC ONLY
DETOUR
M4-10L 48″ x 18″
TYPE III BARRICADE
(F)

R11-4 60″ x 30″
ROAD CLOSED TO THRU TRAFFIC
DETOUR
M4-10R 48″ x 18″
TYPE III BARRICADE
(G)

R11-2 48″ x 30″
ROAD CLOSED
TYPE III BARRICADE(S)
(H)

ROAD CLOSED AHEAD
W20–3 48″ X 48″
NEXT LEFT
SP–4L 42″ X 12″
(I)

ROAD CLOSED AHEAD
W20–3 48″ X 48″
NEXT RIGHT
SP–4R 42″ X 12″
(J)

ROAD CLOSED AHEAD
W20–3 48″ X 48″
(K)

ROAD CLOSED 1000 FT
W20–3 48″ X 48″
(L)

ROAD CLOSED 500 FT
W20–3 48″ X 48″
(M)

jor66165
R:\Roadway\Proj\7B0191_rdy_tmp.dgn
4/12/2016 11:26:30 AM

DocuSign Envelope ID: 19313705-1199-4A8A-B54A-3B7ED459EB8D

PROJECT REFERENCE	SHEET NO.
17BP.7.R.30 – ROCKINGHAM #191	TMP–3

TRAFFIC ENGINEER

NORTH CAROLINA PROFESSIONAL SEAL 023488 ENGINEER NATHAN K. PHILLIPS

DocuSigned by: Nathan K. Phillips
4/13/2016

HATCH MOTT MACDONALD I & E, LLC
LICENSE NO. F-0669

DOCUMENT NOT CONSIDERED FINAL UNLESS ALL SIGNATURES COMPLETED

Prepared in the Office of: Hatch Mott MacDonald PO Box 700 Fuquay-Varina, NC 27526 www.hatchmott.com

SIGN NUMBER: SD-1
TYPE: D
QUANTITY: SEE PLANS

SIGN WIDTH: 3′-6″
HEIGHT: 2′-6″
TOTAL AREA: 8.8 Sq.Ft.

BORDER TYPE: INSET
RECESS: 0.47″
WIDTH: 0.63″
RADII: 1.5″

NO. Z BARS:
LENGTH:

BACKG COLOR: Fluorescent Orange
COPY COLOR: Black

SYMBOL	X	Y	WID	HT

MAT′L: 0.080″ (2.0 mm) ALUMINUM

DESIGN BY: PJJ
CHECKED BY: NKP
PROJECT ID: 17BP.7.R.30
DIV: 7
DATE: Mar 30, 2015

USE NOTES: 1,2

1. Legend and border shall be direct applied black non-reflective sheeting.
2. Background shall be NC GRADE B fluoresent orange retroreflective sheeting.

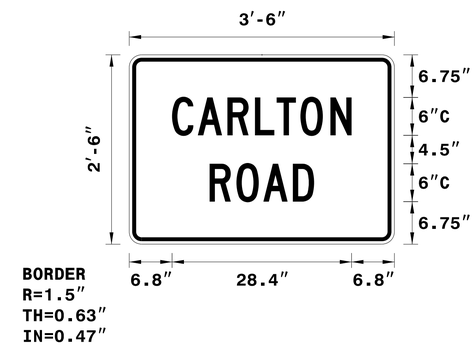

Spacing Factor is 1 unless specified otherwise

LETTER POSITIONS

Letter locations are panel edge to lower left corner

	C	A	R	L	T	O	N																					Series/Size Text Length
	6.8	10.9	15.5	19.9	23.3	27.1	31.9																					C 2000 28.4
	R	O	A	D																								C 2000
	12.7	17	21.2	25.9																								16.6

FILENAME: 780191_rdy_tmp3

NORTH CAROLINA D.O.T. SIGN DETAIL

jor66165
R:\Roadway\Proj\780191_rdy_tmp3.dgn
4/12/2016 11:26:36 AM

PROJECT: 17BP.7.R.30

STATE	STATE PROJECT REFERENCE NO.	SHEET NO.	TOTAL SHEETS
N.C.	17BP.7.R.30	EC-1	

STATE PROJ. NO.	F.A. PROJ. NO.	DESCRIPTION

STATE OF NORTH CAROLINA
DIVISION OF HIGHWAYS

PLAN FOR PROPOSED
HIGHWAY EROSION CONTROL

ROCKINGHAM COUNTY

LOCATION: BRIDGE NO.191 OVER JACOBS CREEK ON SR 2337 (CARLTON ROAD)

TYPE OF WORK: GRADING, PAVING, DRAINAGE AND STRUCTURE

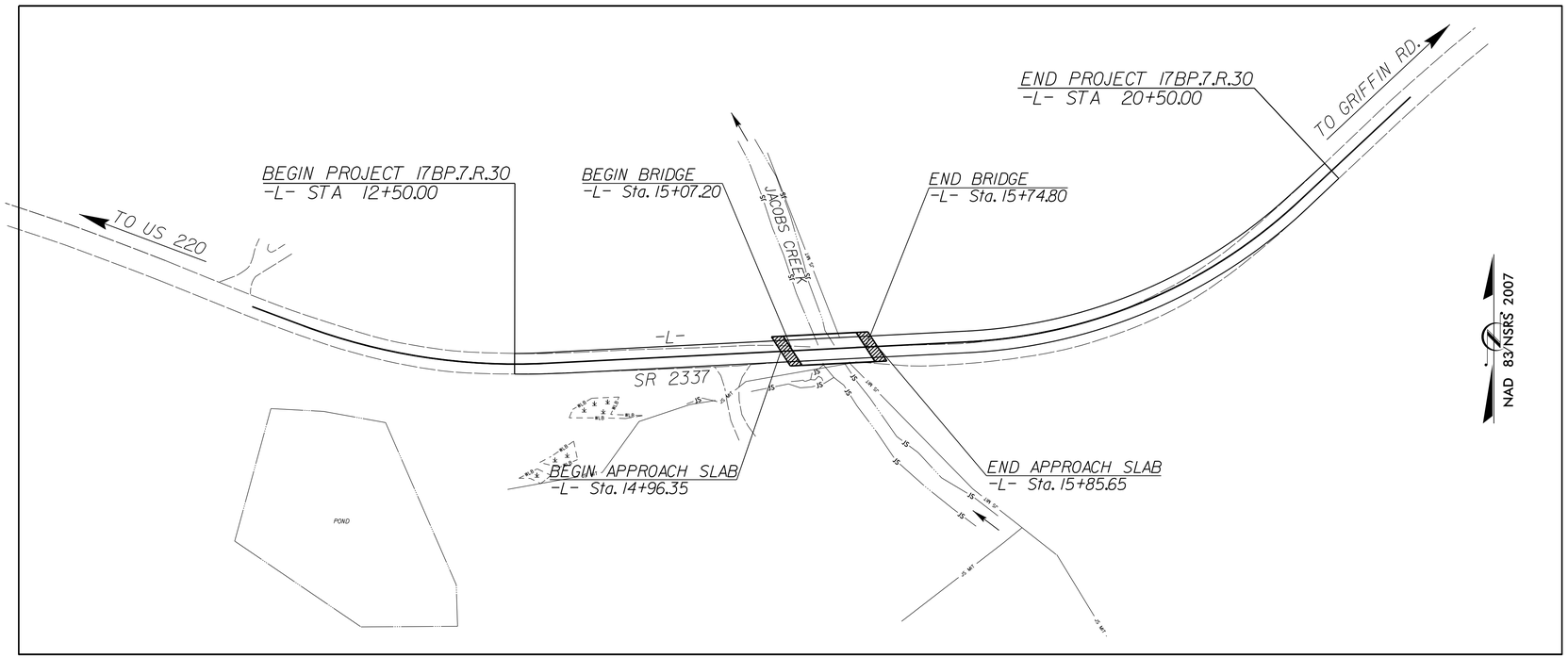

EROSION AND SEDIMENT CONTROL MEASURES

Std. #	Description	Symbol
1630.03	Temporary Silt Ditch	TSD
1630.05	Temporary Diversion	TD
1605.01	Temporary Silt Fence	
1606.01	Special Sediment Control Fence	
1622.01	Temporary Berms and Slope Drains	
1630.02	Silt Basin Type B	
1633.01	Temporary Rock Silt Check Type-A	
	Temporary Rock Silt Check Type-A with Matting and Polyacrylamide (PAM)	
1633.02	Temporary Rock Silt Check Type-B	
	Wattle/ Coir Fiber Wattle	SW CFW
	Wattle/ Coir Fiber Wattle with Polyacrylamide (PAM)	
1634.01	Temporary Rock Sediment Dam Type-A	
1634.02	Temporary Rock Sediment Dam Type-B	
1635.01	Rock Pipe Inlet Sediment Trap Type-A	
1635.02	Rock Pipe Inlet Sediment Trap Type-B	
1630.04	Stilling Basin	
1630.06	Special Stilling Basin	
	Rock Inlet Sediment Trap:	
1632.01	Type A	A
1632.02	Type B	B
1632.03	Type C	C
	Skimmer Basin	
	Tiered Skimmer Basin	
	Infiltration Basin	

THIS PROJECT CONTAINS EROSION CONTROL PLANS FOR CLEARING AND GRUBBING PHASE OF CONSTRUCTION.

GRAPHIC SCALE

0
PLANS

0
PROFILE (HORIZONTAL)

0
PROFILE (VERTICAL)

ROADSIDE ENVIRONMENTAL UNIT
DIVISION OF HIGHWAYS
STATE OF NORTH CAROLINA

THESE EROSION AND SEDIMENT CONTROL PLANS COMPLY WITH THE REGULATIONS SET FORTH BY THE NCG-010000 GENERAL CONSTRUCTION PERMIT EFFECTIVE AUGUST 3, 2011 ISSUED BY THE NORTH CAROLINA DEPARTMENT OF ENVIRONMENT AND NATURAL RESOURCES DIVISION OF WATER QUALITY.

Prepared in the Office of:

ROADSIDE ENVIRONMENTAL UNIT
1 South Wilmington St.
Raleigh, NC 27611

2012 STANDARD SPECIFICATIONS

Designed by:

Wes Chandler — *NAME*
3374 — *LEVEL III CERTIFICATION NO.*

Roadway Standard Drawings

The following roadway english standards as appear in "Roadway Standard Drawings"– Roadway Design Unit – N. C. Department of Transportation – Raleigh, N. C., dated January 2012 and the latest revison thereto are applicable to this project and by reference hereby are considered a part of these plans.

1604.01	Railroad Erosion Control Detail	1632.01	Rock Inlet Sediment Trap Type A
1605.01	Temporary Silt Fence	1632.02	Rock Inlet Sediment Trap Type B
1606.01	Special Sediment Control Fence	1632.03	Rock Inlet Sediment Trap Type C
1607.01	Gravel Construction Entrance	1633.01	Temporary Rock Silt Check Type A
1622.01	Temporary Berms and Slope Drains	1633.02	Temporary Rock Silt Check Type B
1630.01	Riser Basin	1634.01	Temporary Rock Sediment Dam Type A
1630.02	Silt Basin Type B	1634.02	Temporary Rock Sediment Dam Type B
1630.03	Temporary Silt Ditch	1635.01	Rock Pipe Inlet Sediment Trap Type A
1630.04	Stilling Basin	1635.02	Rock Pipe Inlet Sediment Trap Type B
1630.05	Temporary Diversion	1640.01	Coir Fiber Baffle
1630.06	Special Stilling Basin	1645.01	Temporary Stream Crossing
1631.01	Matting Installation		

nder\Documents\Projects\Active\78019\EC\78019_EC_tsh.dgn
07-JAN-2016 15:09
"jchandler" RENV271.416

PROJECT REFERENCE NO.	SHEET NO.
17BP.7.R.30	EC-2
R/W SHEET NO.	
ROADWAY DESIGN ENGINEER	HYDRAULICS ENGINEER

WATTLE WITH POLYACRYLAMIDE (PAM) DETAIL

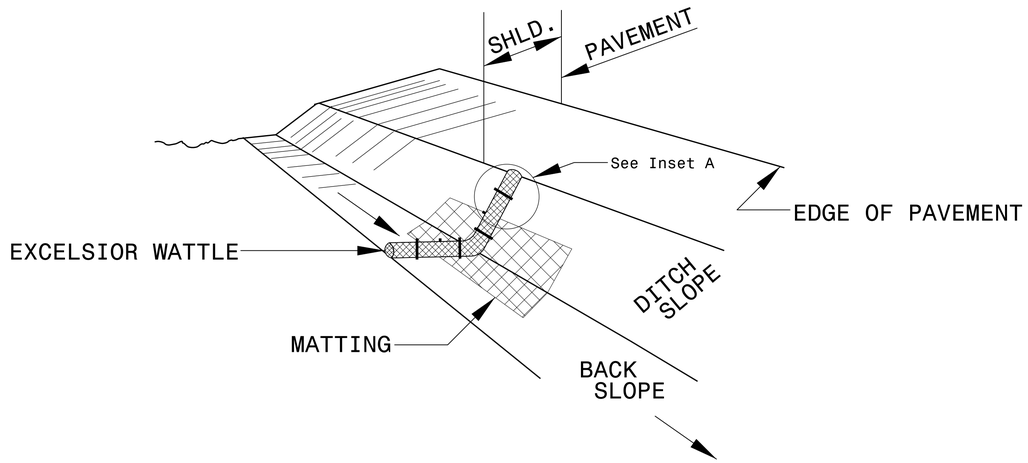

ISOMETRIC VIEW

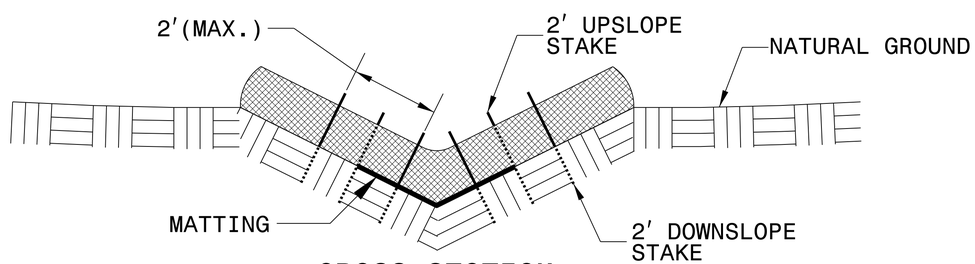

CROSS SECTION VEE DITCH

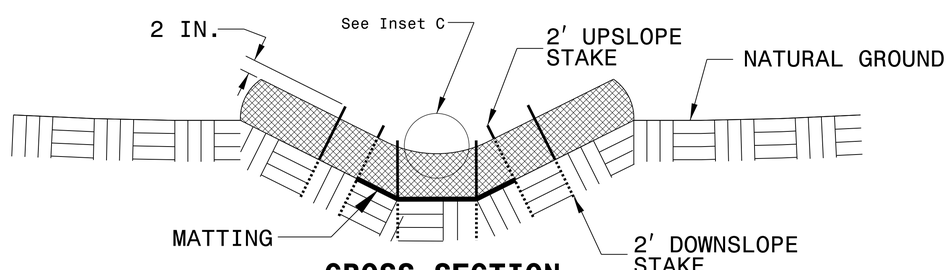

CROSS SECTION TRAPEZOIDAL DITCH

NOTES:

USE MINIMUM 12 IN. DIAMETER EXCELSIOR WATTLE.

USE 2 FT. WOODEN STAKES WITH A 2 IN. BY 2 IN. NOMINAL CROSS SECTION.

ONLY INSTALL WATTLE(S) TO A HEIGHT IN DITCH SO FLOW WILL NOT WASH AROUND WATTLE AND SCOUR DITCH SLOPES AND AS DIRECTED.

INSTALL A MINIMUM OF 2 UPSLOPE STAKES AND 4 DOWNSLOPE STAKES AT AN ANGLE TO WEDGE WATTLE TO BOTTOM OF DITCH.

PROVIDE STAPLES MADE OF 0.125 IN. DIAMETER STEEL WIRE FORMED INTO A U SHAPE NOT LESS THAN 12″ IN LENGTH.

INSTALL STAPLES APPROXIMATELY EVERY 1 LINEAR FOOT ON BOTH SIDES OF WATTLE AND AT EACH END TO SECURE IT TO THE SOIL.

INSTALL MATTING IN ACCORDANCE WITH SECTION 1631 OF THE STANDARD SPECIFICATIONS.

PRIOR TO POLYACRYLAMIDE (PAM) APPLICATION, OBTAIN A SOIL SAMPLE FROM PROJECT LOCATION, AND FROM OFFSITE MATERIAL, AND ANALYZE FOR APPROPRIATE PAM FLOCCULANT TO BE APPLIED TO EACH WATTLE.

INITIALLY APPLY 2 OUNCES OF ANIONIC OR NEUTRALLY CHARGED PAM OVER WATTLE WHERE WATER WILL FLOW AND 1 OUNCE OF PAM ON MATTING ON EACH SIDE OF WATTLE. REAPPLY PAM AFTER EVERY RAINFALL EVENT THAT IS EQUAL TO OR EXCEEDS 0.50 IN.

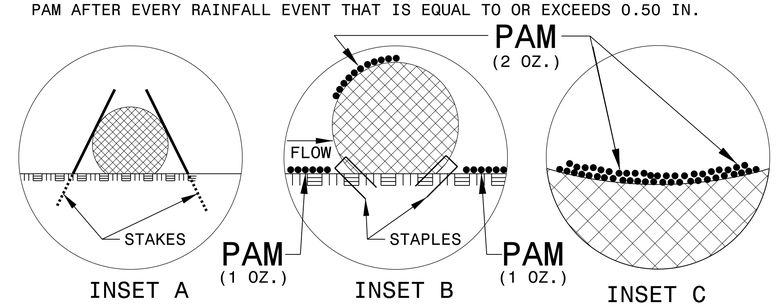

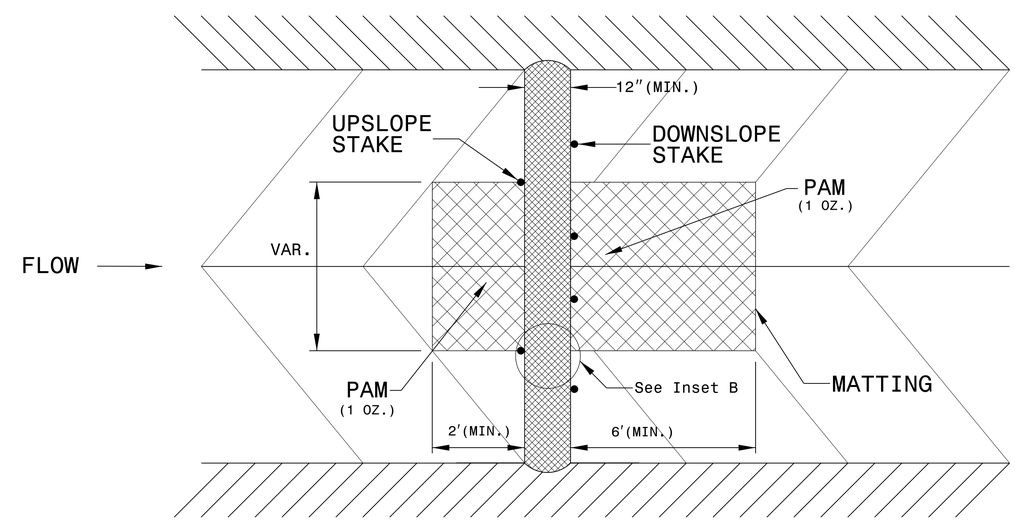

TOP VIEW

PROJECT REFERENCE NO.	SHEET NO.
17BP.7.R.30	EC-2A
R/W SHEET NO.	
ROADWAY DESIGN ENGINEER	HYDRAULICS ENGINEER

TEMPORARY ROCK SILT CHECK TYPE 'A' WITH EXCELSIOR MATTING AND POLYACRYLAMIDE (PAM)

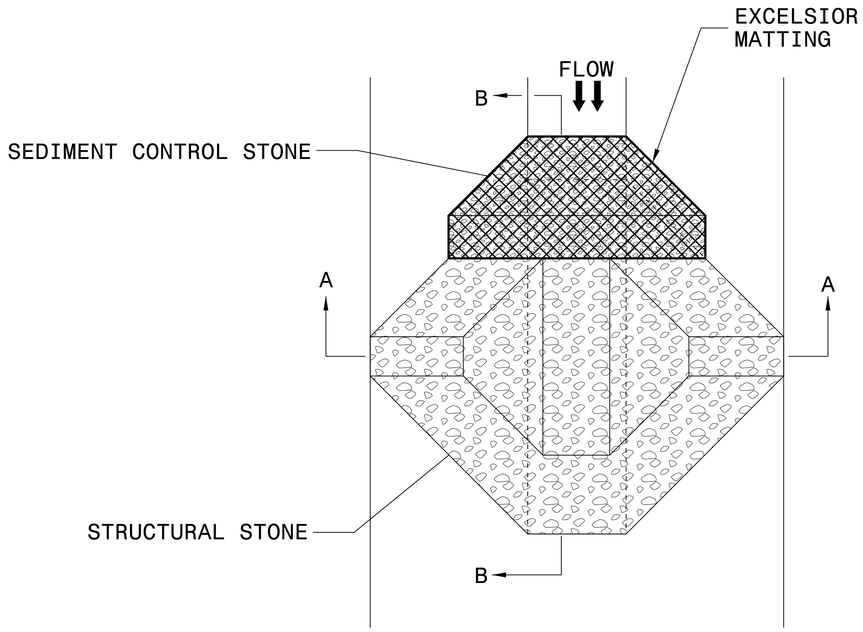

PLAN

NOTES:

INSTALL TEMPORARY ROCK SILT CHECK TYPE A IN ACCORDANCE WITH ROADWAY STANDARD DRAWING NO. 1633.01.

USE EXCELSIOR FOR MATTING MATERIAL AND ANCHOR MATTING SECTION AT TOP AND BOTTOM WITH CLASS B STONE.

PRIOR TO POLYACRYLAMIDE (PAM) APPLICATION, OBTAIN A SOIL SAMPLE FROM PROJECT LOCATION, AND FROM OFFSITE MATERIAL, AND ANALYZE FOR APPROPRIATE PAM FLOCCULANT TO BE APPLIED TO EACH ROCK SILT CHECK.

INITIALLY APPLY 4 OUNCES OF POLYACRYLAMIDE (PAM) TO TOP OF MATTING SECTION AND AFTER EVERY RAINFALL EVENT THAT EQUALS OR EXCEEDS 0.50 INCHES.

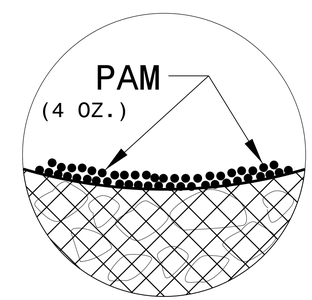

INSET A

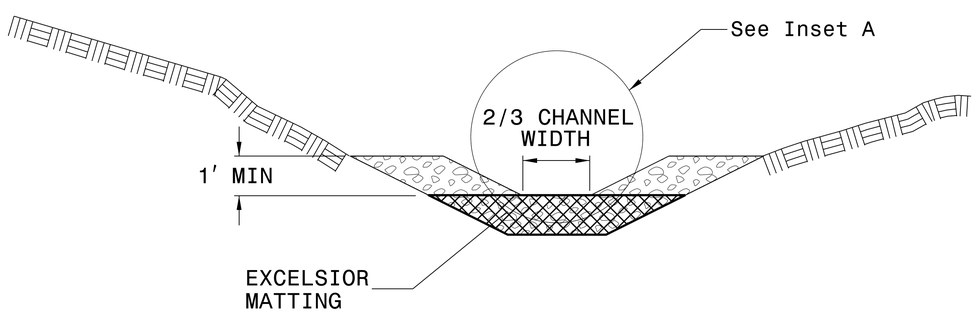

SECTION A-A

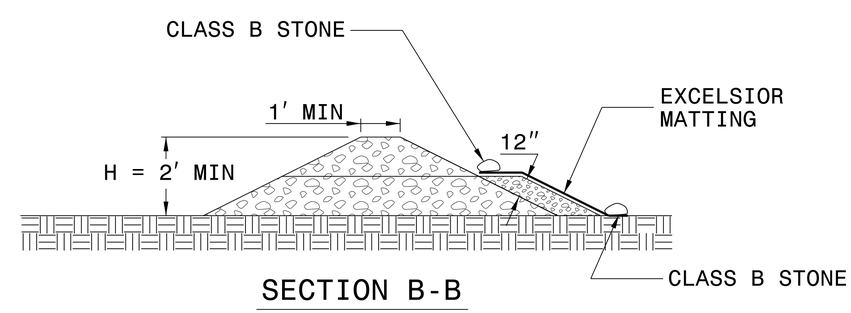

SECTION B-B

NOT TO SCALE

PROJECT REFERENCE NO.	SHEET NO.
17BP.7.R.30	EC-3
ROADWAY DESIGN ENGINEER	HYDRAULICS ENGINEER

DIVISION OF HIGHWAYS
STATE OF NORTH CAROLINA

SOIL STABILIZATION SUMMARY SHEET

PERMANENT SOIL REINFORCEMENT MAT

CONST SHEET NO.	LINE	FROM STATION	TO STATION	SIDE	ESTIMATE (SY)
4	-L-	17+00	20+00	LT	90
				SUBTOTAL	90
	ADDITIONAL PSRM TO BE INSTALLED				85
				TOTAL	175
				SAY	200

PERMANENT SOIL REINFORCEMENT MAT

CONST SHEET NO.	LINE	FROM STATION	TO STATION	SIDE	ESTIMATE (SY)

PROJECT REFERENCE NO.	SHEET NO.
17BP.7.R.30	EC-3A
ROADWAY DESIGN ENGINEER	HYDRAULICS ENGINEER

DIVISION OF HIGHWAYS
STATE OF NORTH CAROLINA

SOIL STABILIZATION TIMEFRAMES

SITE DESCRIPTION	STABILIZATION TIME	TIMEFRAME EXCEPTIONS
PERIMETER DIKES, SWALES, DITCHES AND SLOPES	7 DAYS	NONE
HIGH QUALITY WATER (HQW) ZONES	7 DAYS	NONE
SLOPES STEEPER THAN 3:1	7 DAYS	IF SLOPES ARE 10' OR LESS IN LENGTH AND ARE NOT STEEPER THAN 2:1, 14 DAYS ARE ALLOWED.
SLOPES 3:1 OR FLATTER	14 DAYS	7 DAYS FOR SLOPES GREATER THAN 50' IN LENGTH.
ALL OTHER AREAS WITH SLOPES FLATTER THAN 4:1	14 DAYS	NONE, EXCEPT FOR PERIMETERS AND HQW ZONES.

PROJECT REFERENCE	SHEET NO.
17BP.7.R.30 – ROCKINGHAM #191	EC-4/CONST.4
ROADWAY DESIGN ENGINEER	HYDRAULICS ENGINEER

DOCUMENT NOT CONSIDERED FINAL UNLESS ALL SIGNATURES COMPLETED

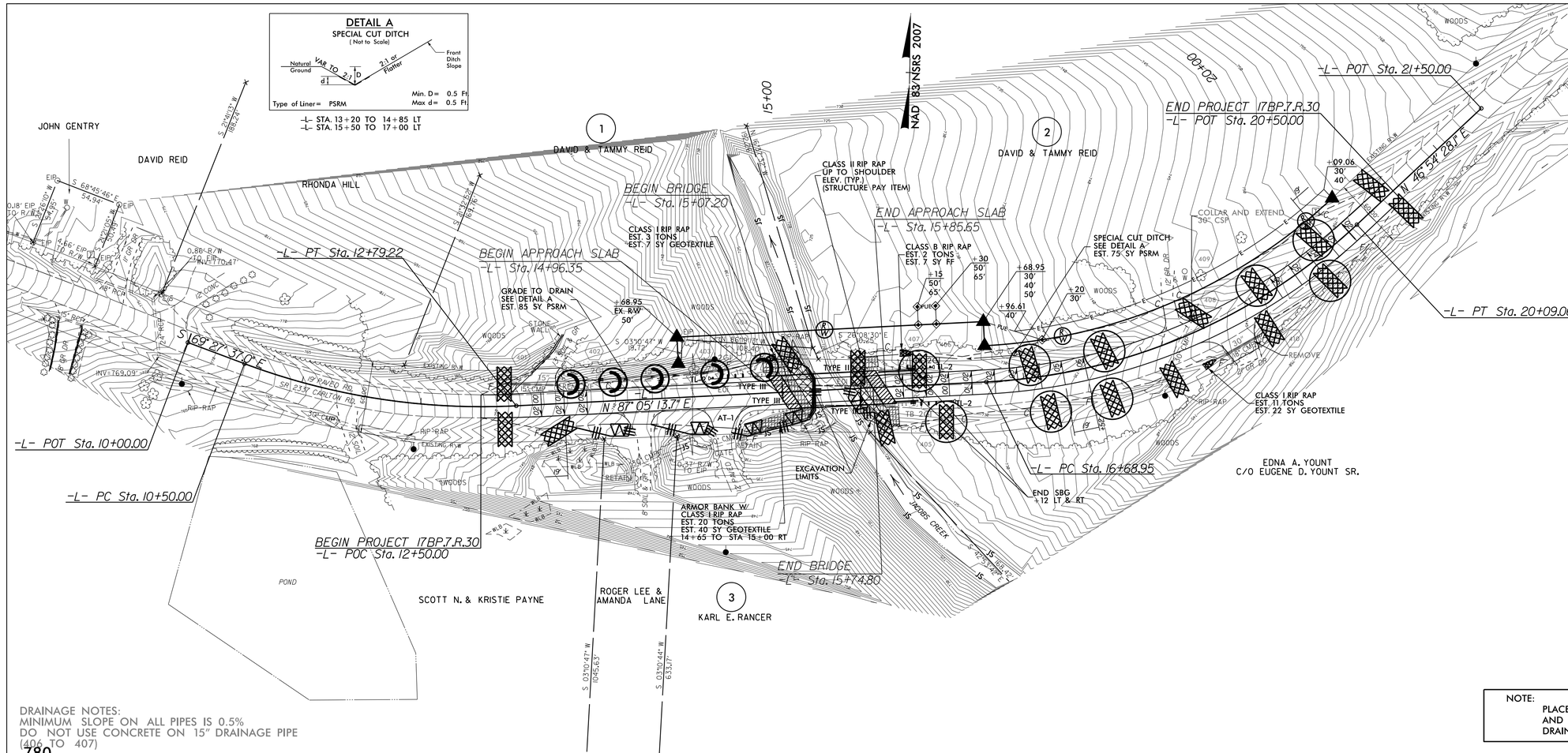

DRAINAGE NOTES:
MINIMUM SLOPE ON ALL PIPES IS 0.5%
DO NOT USE CONCRETE ON 15" DRAINAGE PIPE
(406 TO 407)

CLEARING AND GRUBBING
EROSION CONTROL FOR
CONSTRUCTION SHEET 4

NOTE:
PLACE TEMPORARY ROCK SEDIMENT DAMS TYPE – B AND TEMPORARY ROCK SILT CHECKS TYPE – A AT DRAINAGE OUTLETS.

$$DATE$$
07-JAN-2016 15:23
c:\Users\wjchandler1\Documents\Division Jobs\Active\780191\EC\780191_EC_psh.dgn
wjchandler1 AT FRENV27141G

PROJECT REFERENCE	SHEET NO.
17BP.7.R.30 – ROCKINGHAM #191	EC-5/CONST.4
ROADWAY DESIGN ENGINEER	HYDRAULICS ENGINEER

DOCUMENT NOT CONSIDERED FINAL UNLESS ALL SIGNATURES COMPLETED

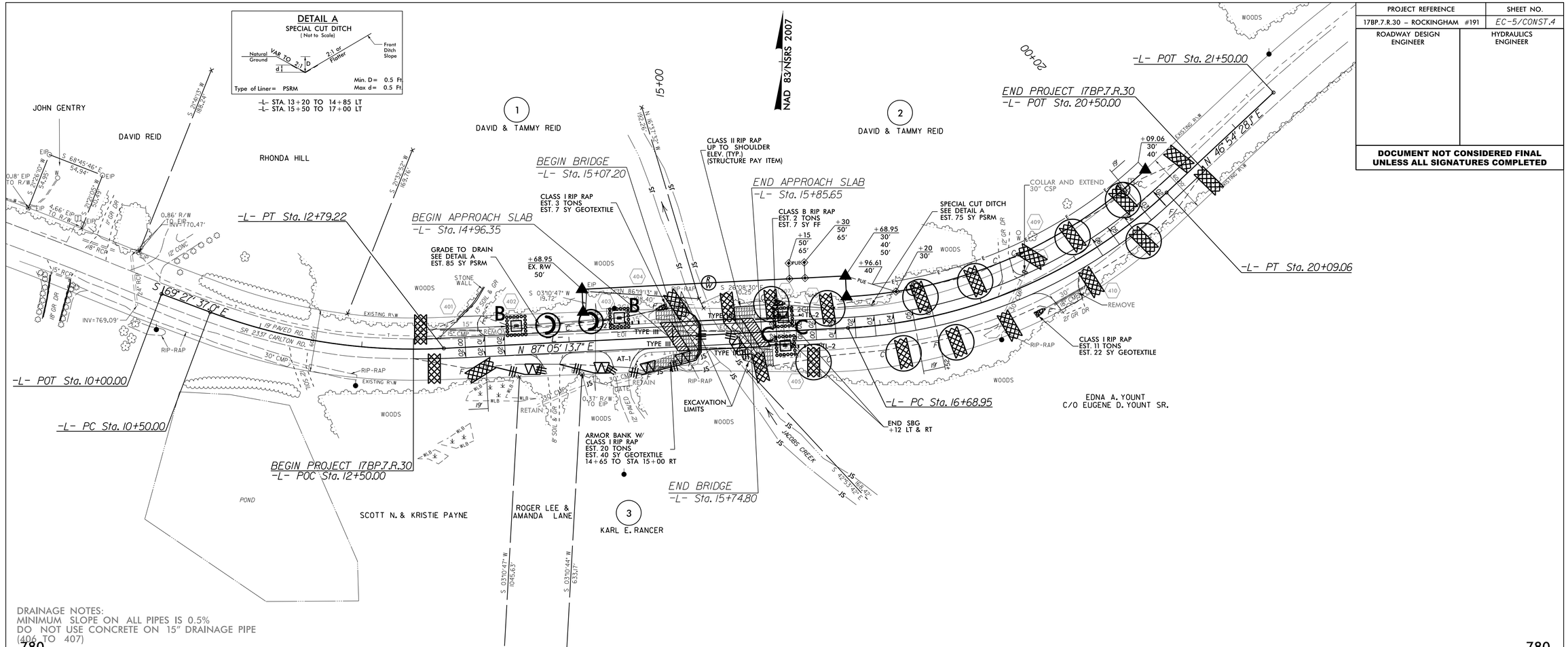

$$DATE$$
07-JAN-2016 15:22
c:\Users\wjchandler1\Documents\Division Jobs\Active\780191\EC\780191_EC_psh.dgn
wjchandler1 AT FRENV27141G

PROJECT REFERENCE	SHEET NO.
17BP.7.R.30 – ROCKINGHAM #191	UO–1

Prepared in the Office of:

THE WOOTEN COMPANY
LICENSE NO. F-0115

THE WOOTEN COMPANY
ENGINEERING | PLANNING | ARCHITECTURE
120 North Boylan Avenue Raleigh NC 27603-1423
919.828.0531 fax 919.834.3589

GRAPHIC SCALE
25' 0 25' 50'

UTILITIES BY OTHERS

NOTE:
ALL PROPOSED UTILITY WORK SHOWN ON THIS SHEET WILL BE DONE BY OTHERS

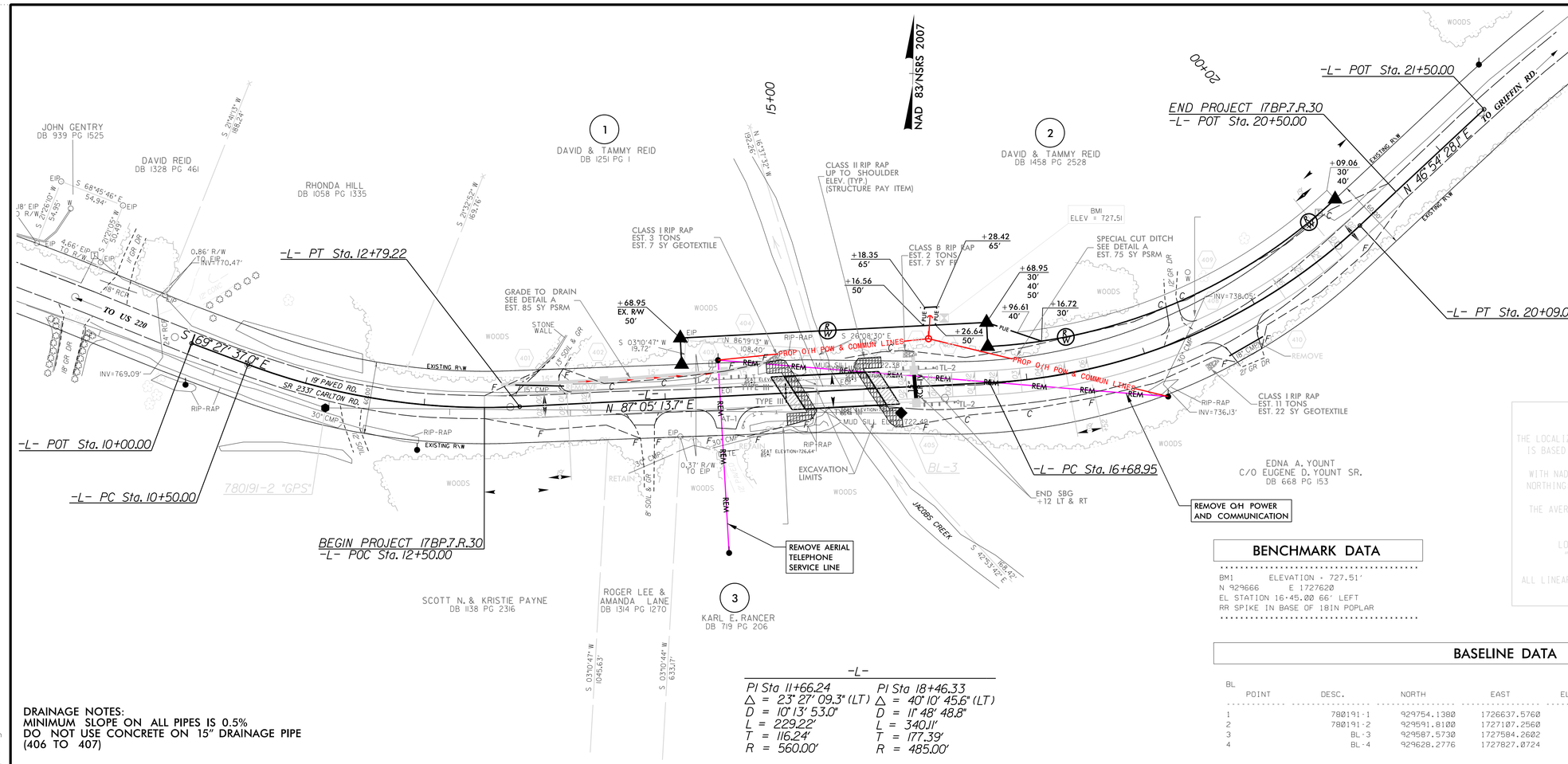

DATUM DESCRIPTION

THE LOCALIZED COORDINATE SYSTEM DEVELOPED FOR THIS PROJECT IS BASED ON THE STATE PLANE COORDINATES ESTABLISHED BY NCDOT FOR MONUMENT "780191-2"
WITH NAD 83/NSRS 2007 STATE PLANE GRID COORDINATES OF
NORTHING: 929591.8100(ft) EASTING: 1727107.2560(ft)
ELEVATION: 762.71'(ft)
THE AVERAGE COMBINED GRID FACTOR USED ON THIS PROJECT (GROUND TO GRID) IS: 0.9999911984
THE N.C. LAMBERT GRID BEARING AND LOCALIZED HORIZONTAL GROUND DISTANCE FROM "780191-2" TO -L- STATION 10+00.00 IS
N 64° 13' 52.9" W 122.99 (ft)
ALL LINEAR DIMENSIONS ARE LOCALIZED HORIZONTAL DISTANCES
VERTICAL DATUM USED IS NAVD 88

BENCHMARK DATA

BM1 ELEVATION - 727.51'
N 929666 E 1727620
EL STATION 16+45.00 66' LEFT
RR SPIKE IN BASE OF 18IN POPLAR

BASELINE DATA

BL

POINT	DESC.	NORTH	EAST	ELEVATION	BL STATION	OFFSET
1	780191-1	929754.1380	1726637.5760	805.91	5+00.00	0.00
2	780191-2	929591.8100	1727107.2560	762.71	9+96.94	0.00
3	BL-3	929587.5730	1727584.2602	728.35	14+73.96	0.00
4	BL-4	929628.2776	1727827.0724	741.88	17+20.16	0.00

-L-

PI Sta 11+66.24	PI Sta 18+46.33
Δ = 23° 27' 09.3" (LT)	Δ = 40° 10' 45.6" (LT)
D = 10° 13' 53.0"	D = 11° 48' 48.8"
L = 229.22'	L = 340.11'
T = 116.24'	T = 177.39'
R = 560.00'	R = 485.00'

DRAINAGE NOTES:
MINIMUM SLOPE ON ALL PIPES IS 0.5%
DO NOT USE CONCRETE ON 15" DRAINAGE PIPE
(406 TO 407)

12/10/2015
5:06:51 PM
T:\Projects\Hatch_Mott_MacDonald-3160\B\Rockingham#191\CADD\290_001_17bp7r30_ut_rdy_U01_psh.dgn
jharris

0 5 10	PROJECT REFERENCE	SHEET NO.
	17BP.7.R.30 ROCKINGHAM #191	X-1

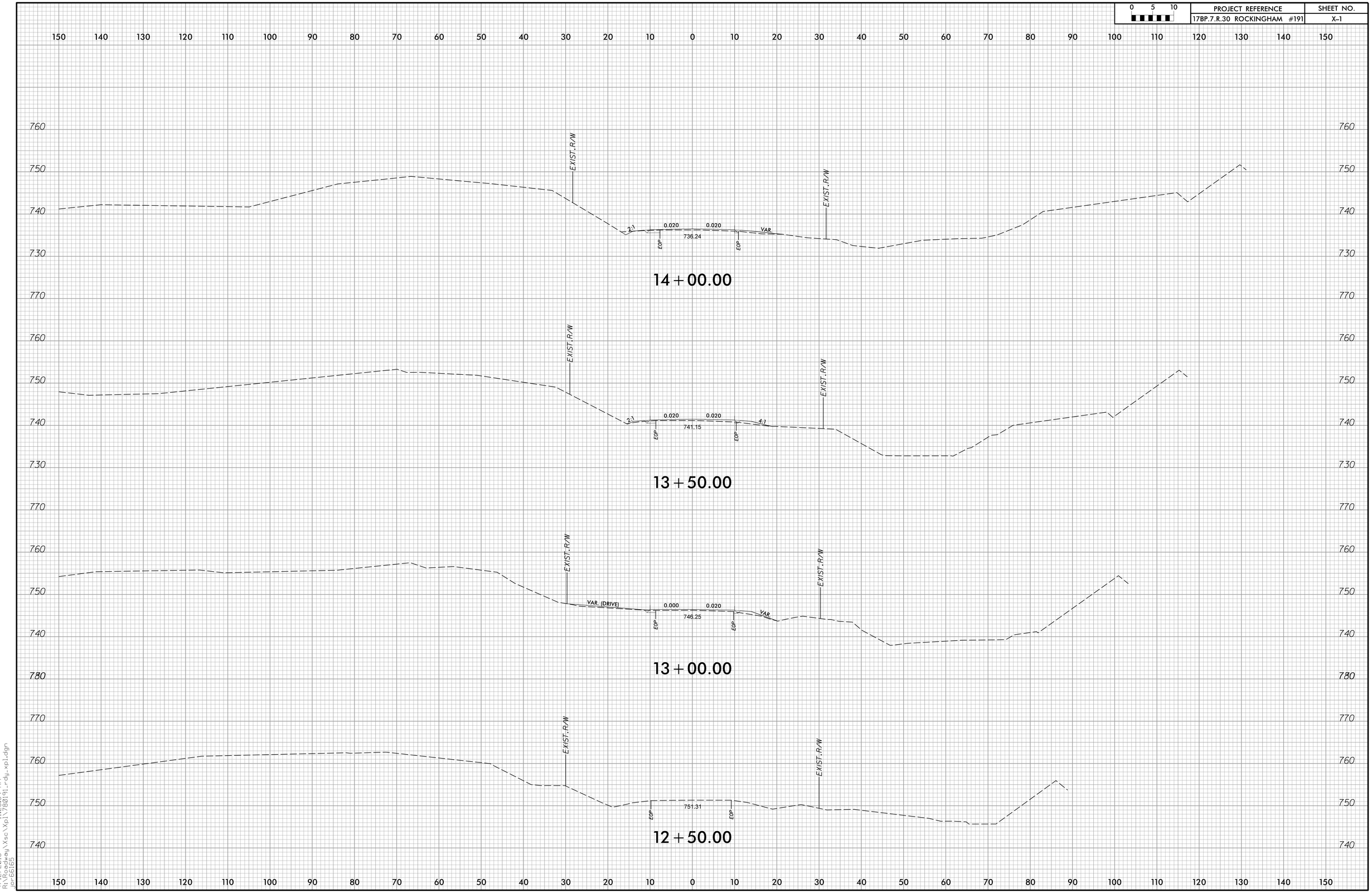

4/12/2016 11:26:39 AM
R:\Roadway\Xsc\Xpl\7780191_rdy_xpl.dgn
jor6616b5

0 5 10	PROJECT REFERENCE	SHEET NO.
	17BP.7.R.30 ROCKINGHAM #191	X-2

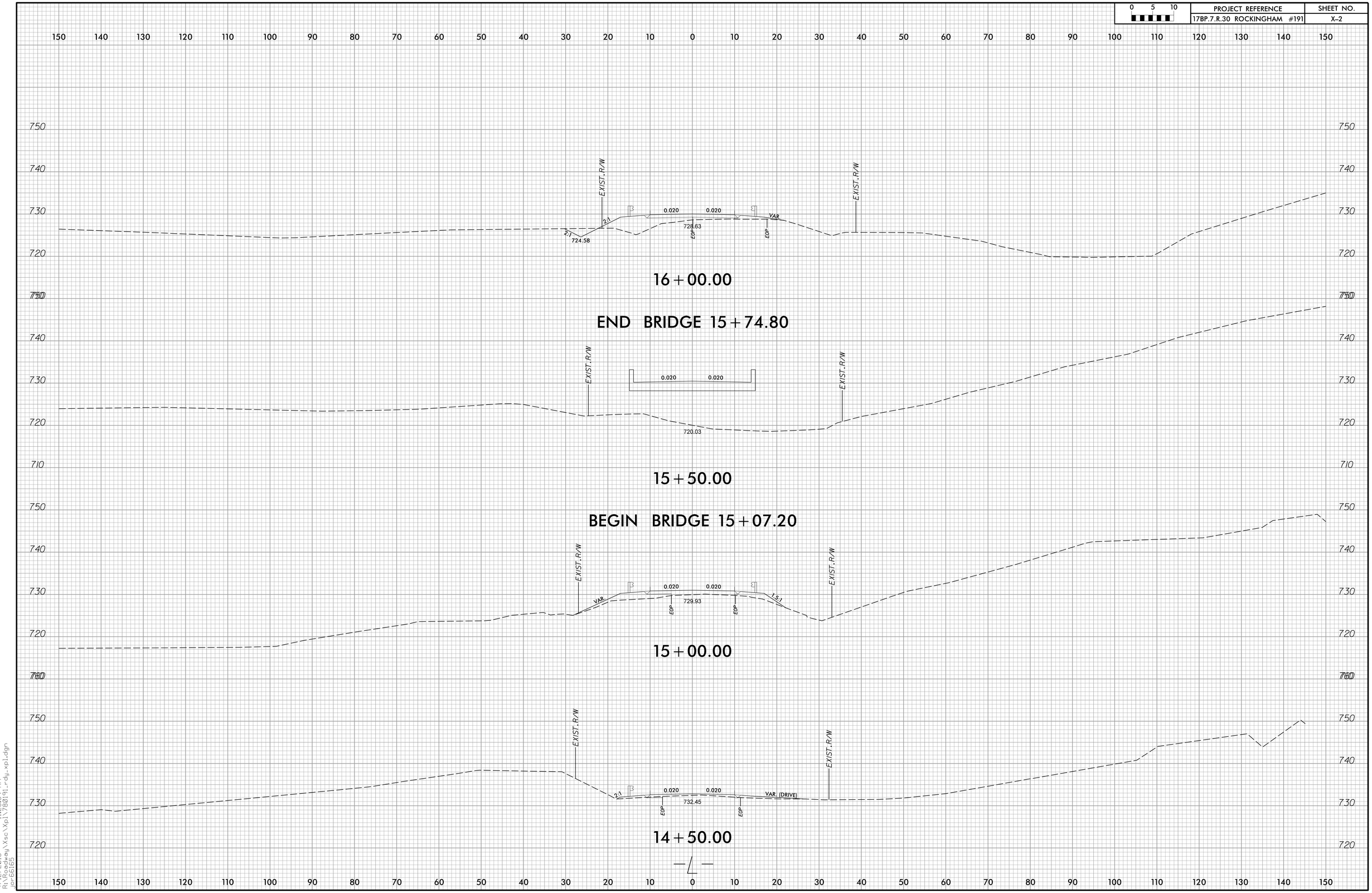

4/12/2016 11:26:39 AM
R:\Roadway\Xsc\Xpl\7180191_rdy_xpl.dgn
jor6616b

0 5 10	PROJECT REFERENCE	SHEET NO.
	17BP.7.R.30 ROCKINGHAM #191	X-3

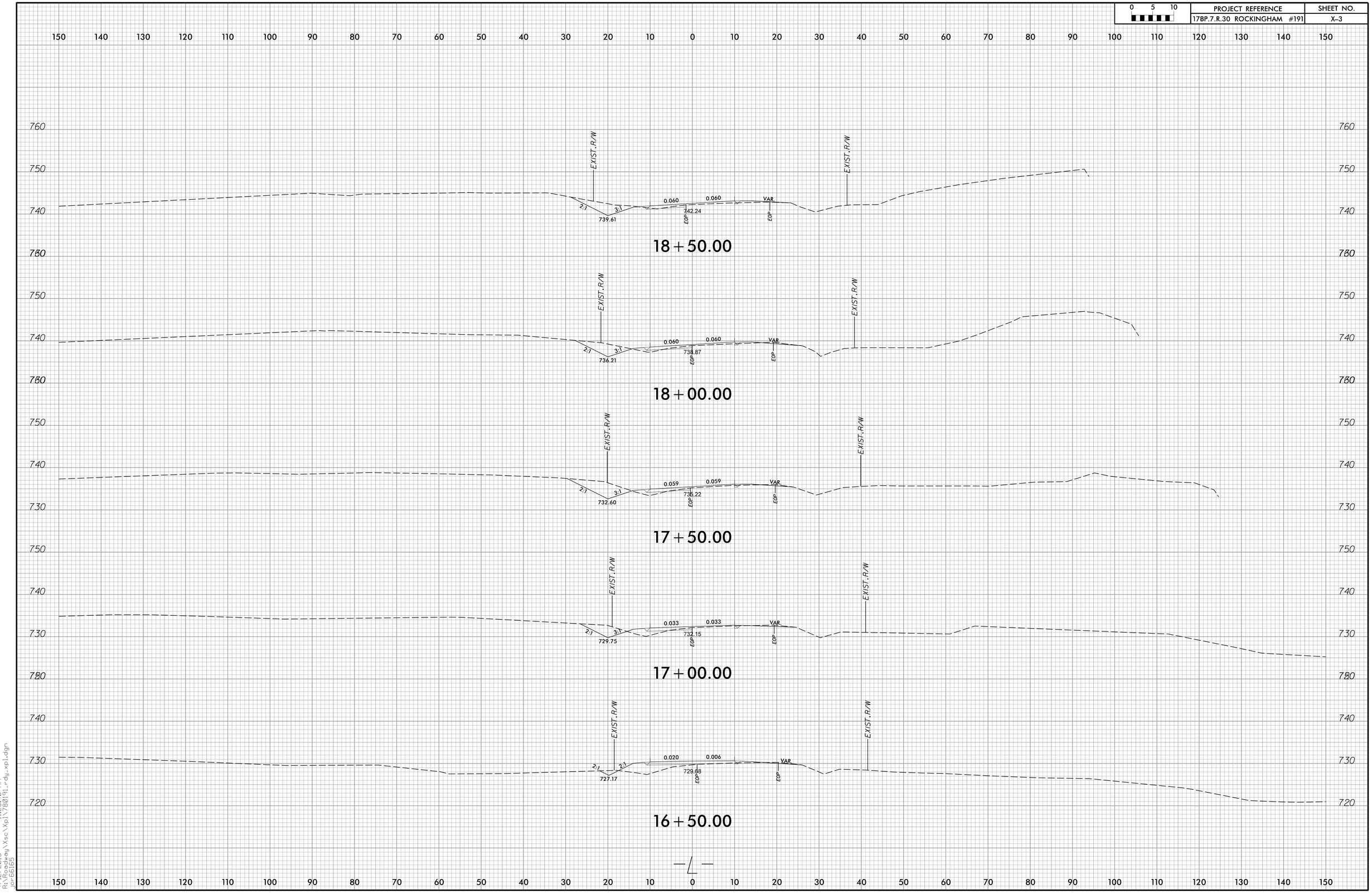

4/12/2016 11:26:40 AM
R:\Roadway\Xsc\Xpl\7180191_rdy_xpl.dgn
jor6616b

0 5 10	PROJECT REFERENCE	SHEET NO.
	17BP.7.R.30 ROCKINGHAM #191	X-4

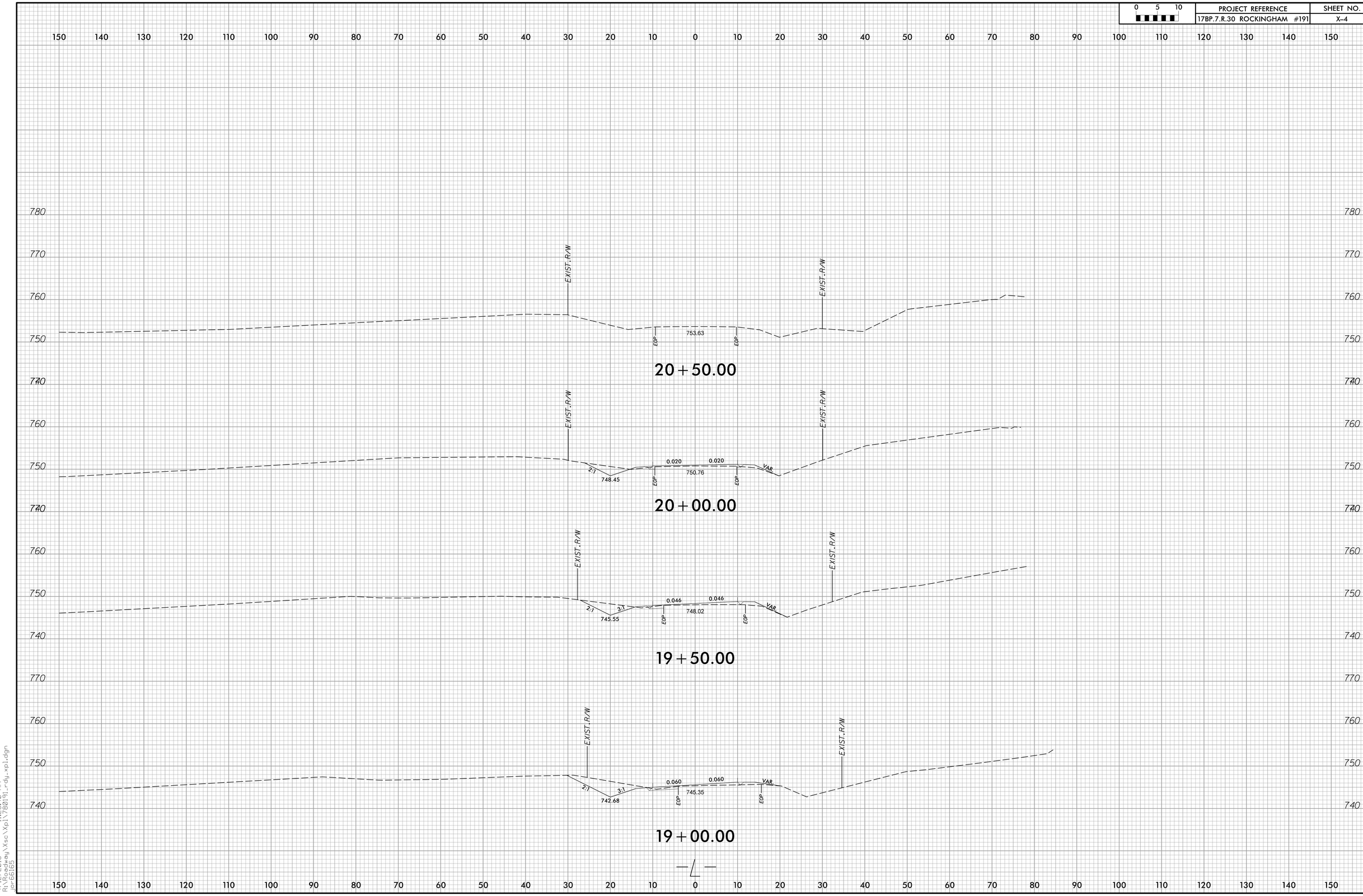

4/12/2016 11:26:40 AM
R:\Roadway\Xsc\Xpl\7180191_rdy_xpl.dgn
jor-66165

DocuSign Envelope ID: D6ECD840-48F9-4E8C-82AB-BDEE07F0314E

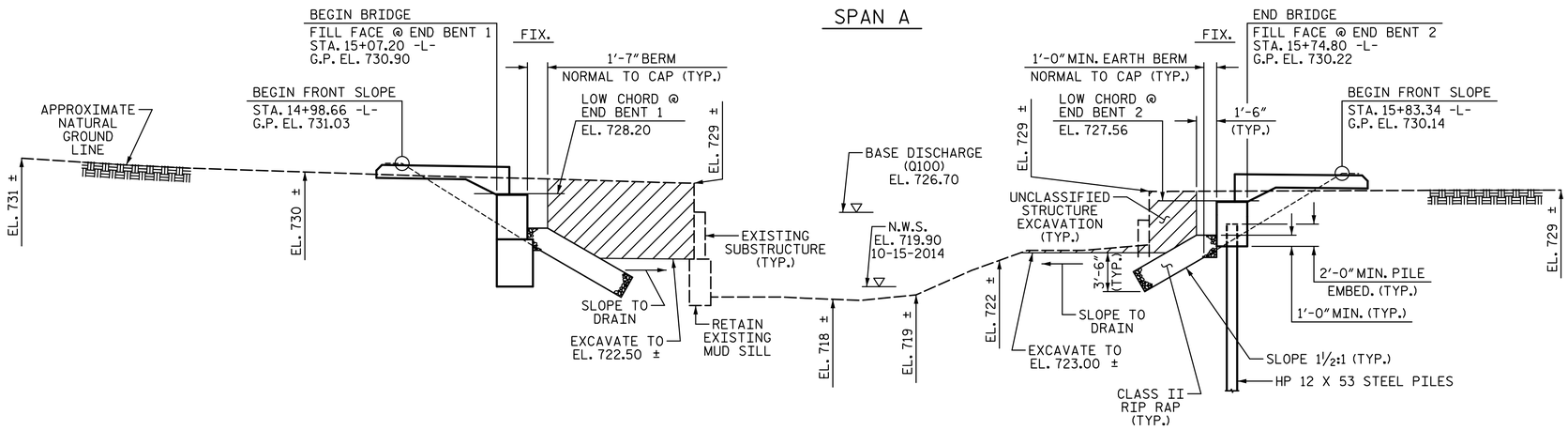

END BENT 1 END BENT 2

SECTION ALONG ℄ SURVEY -L-

(SECTIONS @ END BENTS ARE @ RIGHT ANGLES)

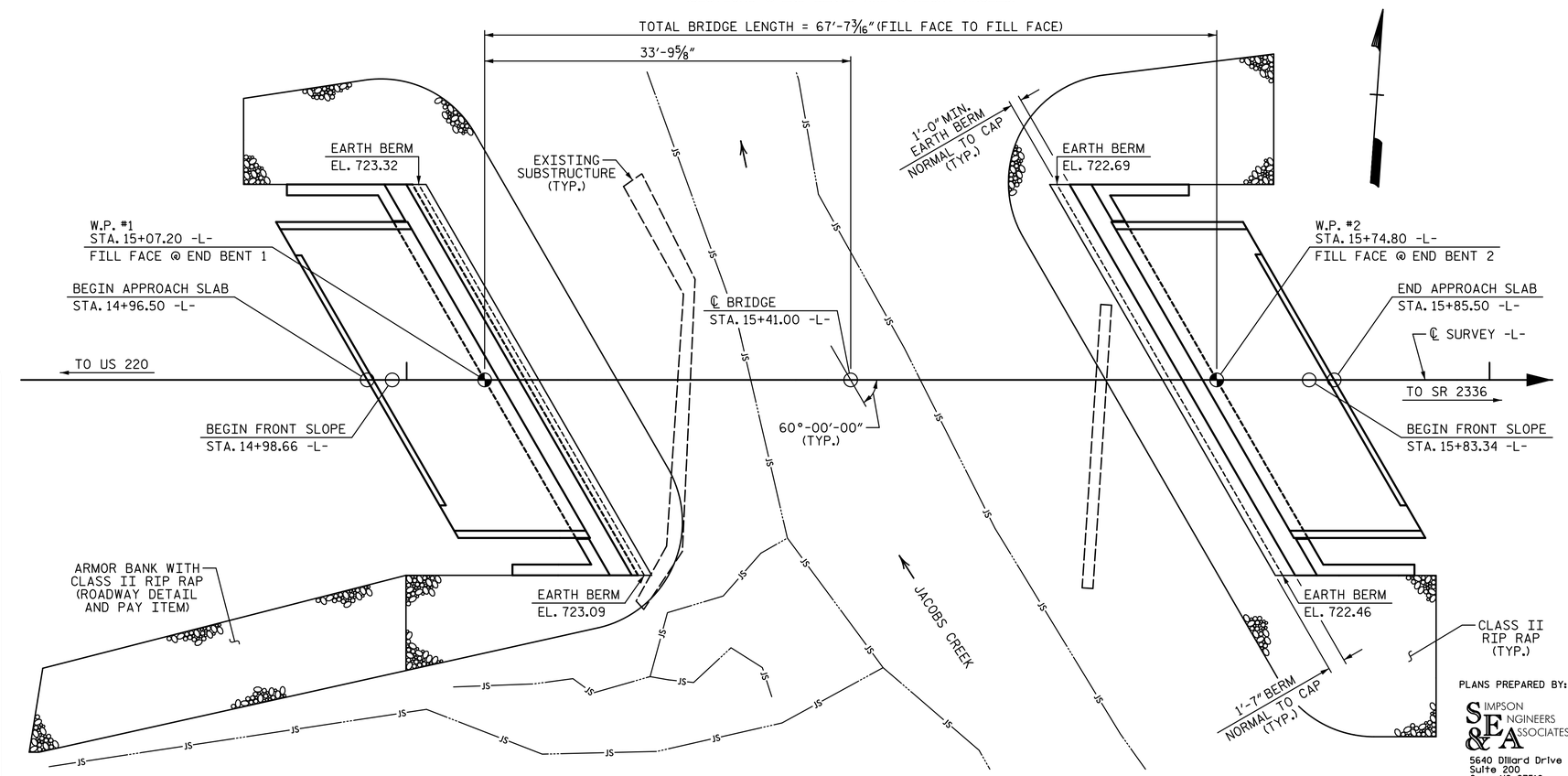

PLAN

(PILES NOT SHOWN IN PLAN VIEW)

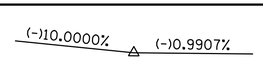

PVI STA. 14+50.00
EL. = 731.46
VC = 120'

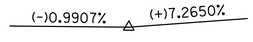

PVI STA. 16+65.00
EL. = 729.33
VC = 160'

GRADE DATA -L-

HYDRAULIC DATA:

DESIGN DISCHARGE	= 1100 CFS
FREQUENCY OF DESIGN FLOOD	= 25 YEAR
DESIGN HIGH WATER ELEVATION	= 725.6
DRAINAGE AREA	= 3.3 SQ. MI.
BASE DISCHARGE (Q 100)	= 1566 CFS
BASE HIGH WATER ELEVATION	= 726.70

OVERTOPPING FLOOD DATA:

OVERTOPPING DISCHARGE	= 2150+ CFS
FREQUENCY OF OVERTOPPING FLOOD	= 500+ YEAR
OVERTOPPING FLOOD ELEVATION	= 730.00 ✱✱

✱✱ OVERTOPPING OCCURS AT ROADWAY SAG AT STA. 16+04.00 -L-

I HEREBY CERTIFY THESE PLANS ARE THE AS-BUILT PLANS

PROJECT NO. 17BP.7.R.30
ROCKINGHAM COUNTY
STATION: 15+41.00 -L-

SHEET 1 OF 2 REPLACES BRIDGE #191

STATE OF NORTH CAROLINA
DEPARTMENT OF TRANSPORTATION
RALEIGH

GENERAL DRAWING

FOR BRIDGE ON SR 2337 (CARLTON RD.) OVER JACOBS CREEK BETWEEN US 220 AND SR 2336

27'-10" CLEAR ROADWAY - 60° SKEW

PLANS PREPARED BY:

SIMPSON ENGINEERS & ASSOCIATES
5640 Dillard Drive
Suite 200
Cary, NC 27518
(919) 852-0468
(919) 852-0598 (Fax)
www.simpsonengr.com
LICENSURE NO. C-2521

NORTH CAROLINA PROFESSIONAL SEAL 11268 ENGINEER BRIDGET S. COX
DocuSigned by: Bridget S. Cox 80307D58B6B4
4/19/2016

REVISIONS						
NO.	BY:	DATE:	NO.	BY:	DATE:	
1			3			
2			4			

SHEET NO. S-1
TOTAL SHEETS 15

DRAWN BY: T. BANKOVICH DATE: 4-16
CHECKED BY: B.S. COX DATE: 4-16
DESIGN ENGINEER OF RECORD: B.S. COX DATE: 4-16

DOCUMENT NOT CONSIDERED FINAL UNLESS ALL SIGNATURES COMPLETED

PROJ:17BP.7.R.30

4/18/2016 2:07:45 PM G:\Projects\2015\Rockingham 191 (17BP7R30)\Structures\Drawings\Final\401_17BP7R30_smu_gd.dgn

DocuSign Envelope ID: D6ECD840-48F9-4E8C-82AB-BDEE07F0314E

LOAD AND RESISTANCE FACTOR RATING (LRFR) SUMMARY FOR PRESTRESSED CONCRETE GIRDERS

LEVEL		VEHICLE	WEIGHT (W) (TONS)	CONTROLLING LOAD RATING	MINIMUM RATING FACTORS (RF)	TONS = W X RF	STRENGTH I LIMIT STATE											SERVICE III LIMIT STATE						COMMENT NUMBER
								MOMENT					SHEAR						MOMENT					
							LIVELOAD FACTORS	DISTRIBUTION FACTORS (DF)	RATING FACTOR	SPAN	GIRDER LOCATION	DISTANCE FROM LEFT END OF SPAN (ft)	DISTRIBUTION FACTORS (DF)	RATING FACTOR	SPAN	GIRDER LOCATION	DISTANCE FROM LEFT END OF SPAN (ft)	LIVELOAD FACTORS	DISTRIBUTION FACTORS (DF)	RATING FACTOR	SPAN	GIRDER LOCATION	DISTANCE FROM LEFT END OF SPAN (ft)	
DESIGN LOAD RATING		HL-93(Inv)	N/A	**1**	1.013	--	1.75	0.248	1.16	65'	EL	31.923	0.652	**1.01**	65'	EL	**6.385**	0.80	0.248	1.12	65'	EL	31.923	
		HL-93(Opr)	N/A	--	1.313	--	1.35	0.248	1.5	65'	EL	31.923	0.652	1.31	65'	EL	6.385	N/A	--	--	--	--	--	
		HS-20(Inv)	36.000	**2**	1.246	44.865	1.75	0.248	1.48	65'	EL	31.923	0.652	**1.25**	65'	EL	**6.385**	0.80	0.248	1.44	65'	EL	31.923	
		HS-20(Opr)	36.000	--	1.616	58.159	1.35	0.248	1.92	65'	EL	31.923	0.652	1.62	65'	EL	6.385	N/A	--	--	--	--	--	
LEGAL LOAD RATING	SV	SNSH	13.500	--	3.163	42.696	1.4	0.248	4.07	65'	EL	31.923	0.652	3.64	65'	EL	6.385	0.80	0.248	3.16	65'	EL	31.923	
		SNGARBS2	20.000	--	2.395	47.893	1.4	0.248	3.08	65'	EL	31.923	0.652	2.61	65'	EL	6.385	0.80	0.248	2.39	65'	EL	31.923	
		SNAGRIS2	22.000	--	2.284	50.247	1.4	0.248	2.94	65'	EL	31.923	0.652	2.43	65'	EL	6.385	0.80	0.248	2.28	65'	EL	31.923	
		SNCOTTS3	27.250	--	1.575	42.917	1.4	0.248	2.03	65'	EL	31.923	0.652	1.82	65'	EL	6.385	0.80	0.248	1.57	65'	EL	31.923	
		SNAGGRS4	34.925	--	1.331	46.469	1.4	0.248	1.71	65'	EL	31.923	0.652	1.53	65'	EL	6.385	0.80	0.248	1.33	65'	EL	31.923	
		SNS5A	35.550	--	1.3	46.22	1.4	0.248	1.67	65'	EL	31.923	0.652	1.55	65'	EL	6.385	0.80	0.248	1.30	65'	EL	31.923	
		SNS6A	39.950	--	1.199	47.899	1.4	0.248	1.54	65'	EL	31.923	0.652	1.42	65'	EL	6.385	0.80	0.248	1.20	65'	EL	31.923	
		SNS7B	42.000	--	1.142	47.965	1.4	0.248	1.47	65'	EL	31.923	0.652	1.4	65'	EL	6.385	0.80	0.248	1.14	65'	EL	31.923	
	TTST	TNAGRIT3	33.000	--	1.464	48.309	1.4	0.248	1.89	65'	EL	31.923	0.652	1.69	65'	EL	6.385	0.80	0.248	1.46	65'	EL	31.923	
		TNT4A	33.075	--	1.472	48.688	1.4	0.248	1.9	65'	EL	31.923	0.652	1.64	65'	EL	6.385	0.80	0.248	1.47	65'	EL	31.923	
		TNT6A	41.600	--	1.209	50.315	1.4	0.248	1.56	65'	EL	31.923	0.652	1.51	65'	EL	6.385	0.80	0.248	1.21	65'	EL	31.923	
		TNT7A	42.000	--	1.219	51.186	1.4	0.248	1.57	65'	EL	31.923	0.652	1.46	65'	EL	6.385	0.80	0.248	1.22	65'	EL	31.923	
		TNT7B	42.000	--	1.269	53.286	1.4	0.248	1.63	65'	EL	31.923	0.652	1.37	65'	EL	6.385	0.80	0.248	1.27	65'	EL	31.923	
		TNAGRIT4	43.000	--	1.201	51.645	1.4	0.248	1.55	65'	EL	31.923	0.652	1.32	65'	EL	6.385	0.80	0.248	1.20	65'	EL	31.923	
		TNAGT5A	45.000	--	1.13	50.836	1.4	0.248	1.45	65'	EL	31.923	0.652	1.32	65'	EL	6.385	0.80	0.248	1.13	65'	EL	31.923	
		TNAGT5B	45.000	**3**	1.114	50.113	1.4	0.248	1.43	65'	EL	31.923	0.652	1.25	65'	EL	6.385	0.80	0.248	**1.11**	65'	EL	**31.923**	

LOAD FACTORS:

DESIGN LOAD RATING FACTORS	LIMIT STATE	γ_{DC}	γ_{DW}
	STRENGTH I	1.25	1.50
	SERVICE III	1.00	1.00

NOTES:

MINIMUM RATING FACTORS ARE BASED ON THE STRENGTH I AND SERVICE III LIMIT STATES.

ALLOWABLE STRESSES FOR SERVICE III LIMIT STATE ARE AS REQUIRED FOR DESIGN.

COMMENTS:

1.
2.
3.
4.

(#) CONTROLLING LOAD RATING

(1) DESIGN LOAD RATING (HL-93)

(2) DESIGN LOAD RATING (HS-20)

(3) LEGAL LOAD RATING **

** SEE CHART FOR VEHICLE TYPE

GIRDER LOCATION

I - INTERIOR GIRDER
EL - EXTERIOR LEFT GIRDER
ER - EXTERIOR RIGHT GIRDER

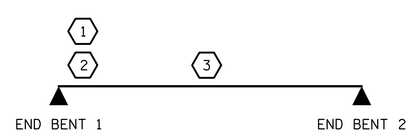

LRFR SUMMARY

FOR SPAN A

PROJECT NO. 17BP.7.R.30

ROCKINGHAM COUNTY

STATION: 15+41.00 -L-

PLANS PREPARED BY:

SIMPSON ENGINEERS & ASSOCIATES

5640 Dillard Drive
Suite 200
Cary, NC 27518
(919) 852-0468
(919) 852-0598 (Fax)
www.simpsonengr.com

LICENSURE NO. C-2521

NORTH CAROLINA PROFESSIONAL SEAL 11268 ENGINEER BETSY S. COX

Documents signed by: Betsy S. Cox
3C5D7D8B6C4D4A4...
4/19/2016

DOCUMENT NOT CONSIDERED FINAL UNLESS ALL SIGNATURES COMPLETED

STATE OF NORTH CAROLINA
DEPARTMENT OF TRANSPORTATION
RALEIGH

LRFR SUMMARY FOR 65' CORED SLAB UNIT 60° SKEW

(NON-INTERSTATE TRAFFIC)

REVISIONS						SHEET NO.
NO.	BY:	DATE:	NO.	BY:	DATE:	S-3
1			3			TOTAL SHEETS
2			4			15

DRAWN BY: T. BANKOVICH DATE: 4-16
CHECKED BY: B.S. COX DATE: 4-16
DESIGN ENGINEER OF RECORD: B.S. COX DATE: 4-16

4/18/2016 2:07:46 PM G:\Projects\2015\Rockingham 191 (17BP7R30)\Structures\Drawings\Final\401_17BP7R30_SMU_lrfr.dgn

DocuSign Envelope ID: D6ECD840-48F9-4E8C-82AB-BDEE07F0314E

BM #1: RR SPIKE IN BASE OF 18" POPLAR, STA. 16+34.08 -L-, 55.4' LT., EL. 727.51

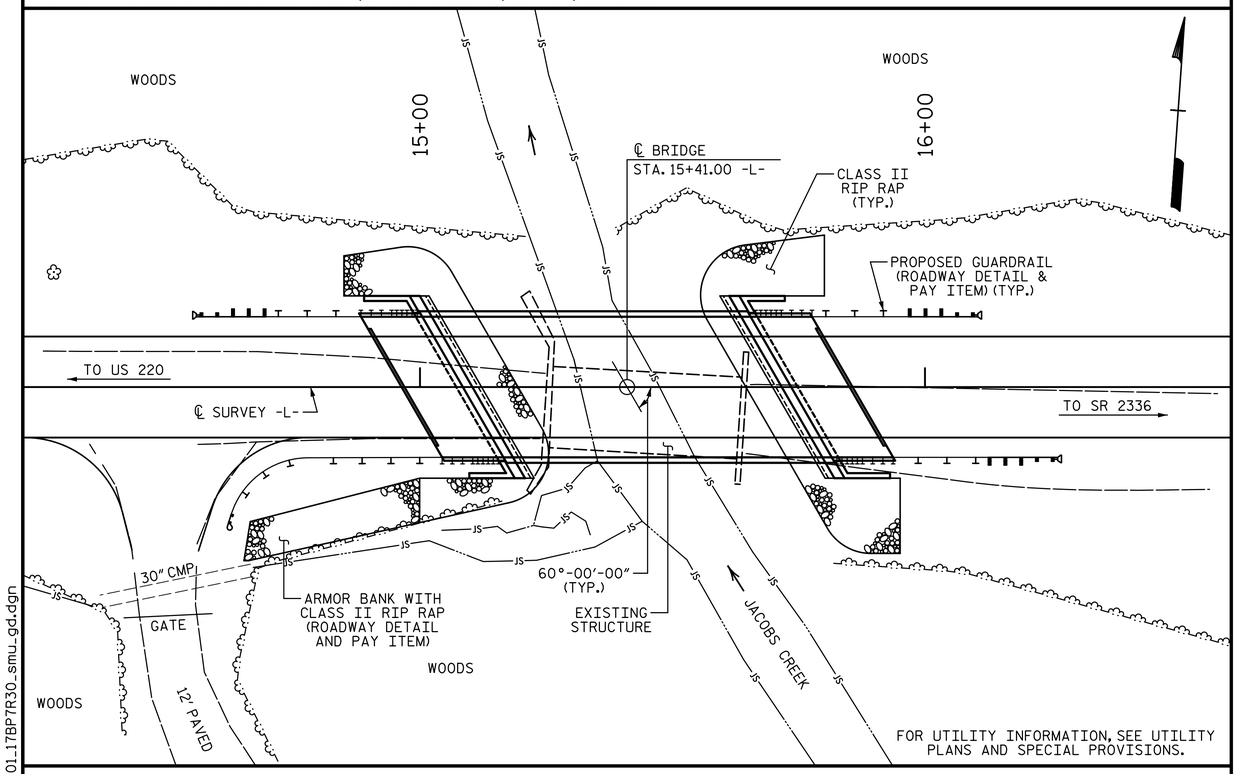

LOCATION SKETCH

NOTES:

ASSUMED LIVE LOAD = HL-93 OR ALTERNATE LOADING.

THIS BRIDGE HAS BEEN DESIGNED IN ACCORDANCE WITH THE AASHTO LRFD BRIDGE DESIGN SPECIFICATIONS.

THIS BRIDGE IS LOCATED IN SEISMIC ZONE 1.

FOR OTHER DESIGN DATA AND GENERAL NOTES, SEE SHEET SN.

FOR EROSION CONTROL MEASURES, SEE EROSION CONTROL PLANS.

REMOVAL OF THE EXISTING BRIDGE SHALL BE PERFORMED SO AS NOT TO ALLOW DEBRIS TO FALL INTO THE WATER. THE CONTRACTOR SHALL REMOVE THE BRIDGE AND SUBMIT PLANS FOR DEMOLITION IN ACCORDANCE WITH ARTICLE 402-2 OF THE STANDARD SPECIFICATIONS.

THE MATERIAL SHOWN IN THE CROSS-HATCHED AREA SHALL BE EXCAVATED FOR A DISTANCE OF 30 FT. LT. AND RT. OF CENTERLINE ROADWAY AS DIRECTED BY THE ENGINEER. THIS WORK WILL BE PAID FOR AT THE CONTRACT LUMP SUM PRICE FOR UNCLASSIFIED STRUCTURE EXCAVATION. SEE SECTION 412 OF THE STANDARD SPECIFICATIONS.

THE EXISTING STRUCTURE CONSISTS OF 1 SPAN @ 40'-6" THE SUPERSTRUCTURE HAS A CLEAR ROADWAY WIDTH OF 15.75' AND HAS A TIMBER DECK ON STEEL GIRDER/STRINGER/FLOOR BEAM SYSTEM. THE END BENTS CONSIST OF TIMBER CAPS AND CONCRETE ENCASED TIMBER PILES WITH TIMBER BULKHEADS. THE EXISTING STRUCTURE, WHICH IS LOCATED AT THE SITE OF THE PROPOSED STRUCTURE, SHALL BE REMOVED. THE EXISTING BRIDGE IS PRESENTLY POSTED FOR LOAD LIMIT. SHOULD THE STRUCTURAL INTEGRITY OF THE BRIDGE DETERIORATE DURING CONSTRUCTION OF THE PROPOSED BRIDGE, THE LOAD LIMIT MAY BE REDUCED AS NECESSARY DURING THE LIFE OF THE PROJECT.

THE SUBSTRUCTURE OF THE EXISTING BRIDGE INDICATED ON THE PLANS IS FROM THE BEST INFORMATION AVAILABLE. SINCE THIS INFORMATION IS SHOWN FOR THE CONVENIENCE OF THE CONTRACTOR. THE CONTRACTOR SHALL HAVE NO CLAIM WHATSOEVER AGAINST THE DEPARTMENT OF TRANSPORTATION FOR ANY DELAYS OR ADDITIONAL COST INCURRED BASED ON DIFFERENCES BETWEEN THE EXISTING BRIDGE SUBSTRUCTURE SHOWN ON THE PLANS AND THE ACTUAL CONDITIONS AT THE PROJECT SITE.

THIS STRUCTURE HAS BEEN DESIGNED IN ACCORDANCE WITH "HEC 18-EVALUATING SCOUR AT BRIDGES."

FOR SUBMITTAL OF WORKING DRAWINGS, SEE SPECIAL PROVISIONS.

FOR FALSEWORK AND FORMWORK, SEE SPECIAL PROVISIONS.

FOR CRANE SAFETY, SEE SPECIAL PROVISIONS.

FOR GROUT FOR STRUCTURES, SEE SPECIAL PROVISIONS.

ASPHALT WEARING SURFACE IS INCLUDED IN ROADWAY QUANTITY ON ROADWAY PLANS.

INASMUCH AS THE PAINT SYSTEM ON THE EXISTING STRUCTURAL STEEL CONTAINS LEAD, THE CONTRACTOR'S ATTENTION IS DIRECTED TO ARTICLE 107-1 OF THE STANDARD SPECIFICATIONS. ANY COSTS RESULTING FROM COMPLIANCE WITH APPLICABLE STATE OR FEDERAL REGULATIONS PERTAINING TO HANDLING OF MATERIALS CONTAINING LEAD BASED PAINT SHALL BE INCLUDED IN THE BID PRICE FOR "REMOVAL OF EXISTING STRUCTURE AT STATION 15+41.00 -L-."

FOR ASBESTOS ASSESSMENT FOR BRIDGE DEMOLITION AND RENOVATION ACTIVITIES, SEE SPECIAL PROVISIONS.

TOTAL BILL OF MATERIAL

	REMOVAL OF EXISTING STRUCTURE	FOUNDATION EXCAVATION	PILE EXCAVATION IN SOIL	PILE EXCAVATION NOT IN SOIL	UNCLASSIFIED STRUCTURE EXCAVATION	CLASS A CONCRETE	BRIDGE APPROACH SLABS	REINFORCING STEEL	HP 12 X 53 STEEL PILES		VERTICAL CONCRETE BARRIER RAIL	RIP RAP CLASS II (2'-0" THICK)	GEOTEXTILE FOR DRAINAGE	ELASTOMERIC BEARINGS	3'-0" X 2'-0" PRESTRESSED CONCRETE CORED SLABS		ASBESTOS ASSESSMENT
	LS	LS	LF	LF	LS	CY	LS	LB	NO.	LF	LF	TON	SY	LS	NO.	LF	LS
SUPERSTRUCTURE							LS				130.29			LS	10	650.00	
END BENT 1		LS			LS	39.7		3,961				105	120				
END BENT 2			30	20	LS	22.6		2,742	5	50		95	105				
TOTAL	LS	LS	30	20	LS	62.3	LS	6,703	5	50	130.29	200	225	LS	10	650.00	LS

FOUNDATION NOTES:

THE SCOUR CRITICAL ELEVATION FOR END BENT 1 IS THE BOTTOM OF FOOTING ELEVATION. SCOUR CRITICAL ELEVATIONS ARE USED TO MONITOR POSSIBLE SCOUR PROBLEMS DURING THE LIFE OF THE STRUCTURE.

THE SPREAD FOOTINGS AT END BENT 1 ARE DESIGNED FOR A FACTORED RESISTANCE OF 10 TSF. CHECK FIELD CONDITIONS FOR THE REQUIRED RESISTANCE OF 25 TSF JUST BEFORE PLACING CONCRETE.

FOR PILES, SEE SECTION 450 OF THE STANDARD SPECIFICATIONS.

PILES AT END BENT 2 ARE DESIGNED FOR A FACTORED RESISTANCE OF 95 TONS PER PILE.

DRIVE PILES AT END BENT 2 TO A REQUIRED DRIVING RESISTANCE OF 160 TONS PER PILE.

CONCRETE OR GROUT IS REQUIRED TO FILL HOLES FOR PILE EXCAVATION AT END BENT 2.

KEY IN SPREAD FOOTINGS AT END BENT 1 AT LEAST 6" INTO ROCK OR 12" INTO WEATHERED ROCK WITH A MINIMUM THICKNESS AS SHOWN IN THE PLANS.

PILE EXCAVATION MAY BE REQUIRED TO INSTALL PILES AT END BENT 2. THE ENGINEER WILL DETERMINE THE NEED FOR PILE EXCAVATION. IF REQUIRED, EXCAVATE HOLES AT PILE LOCATIONS TO ELEVATION 713.70 FT. FOR PILE EXCAVATION, SEE SECTION 450 OF THE STANDARD SPECIFICATIONS.

PROJECT NO. 17BP.7.R.30
ROCKINGHAM COUNTY
STATION: 15+41.00 -L-

SHEET 2 OF 2

STATE OF NORTH CAROLINA
DEPARTMENT OF TRANSPORTATION
RALEIGH

GENERAL DRAWING

FOR BRIDGE ON SR 2337
(CARLTON RD.) OVER JACOBS CREEK
BETWEEN US 220 AND SR 2336

27'-10" CLEAR ROADWAY - 60° SKEW

PLANS PREPARED BY:
SIMPSON ENGINEERS & ASSOCIATES
5640 Dillard Drive
Suite 200
Cary, NC 27518
(919) 852-0468
(919) 852-0598 (Fax)
www.simpsonengr.com
LICENSURE NO. C-2521

NORTH CAROLINA PROFESSIONAL SEAL 11268 ENGINEER BETSY S. COX
DocuSigned by: Betsy S. Cox
4/19/2016

DOCUMENT NOT CONSIDERED FINAL
UNLESS ALL SIGNATURES COMPLETED

REVISIONS						SHEET NO.
NO.	BY:	DATE:	NO.	BY:	DATE:	S-2
1			3			TOTAL SHEETS
2			4			15

DRAWN BY: T. BANKOVICH DATE: 4-16
CHECKED BY: B.S. COX DATE: 4-16
DESIGN ENGINEER OF RECORD: B.S. COX DATE: 4-16

4/18/2016 2:07:46 PM G:\Projects\2015\Rockingham 191 (17BP7R30)\Structures\Drawings\Final\401_17BP7R30_smu_gd.dgn

DocuSign Envelope ID: D6ECD840-48F9-4E8C-82AB-BDEE07F0314E

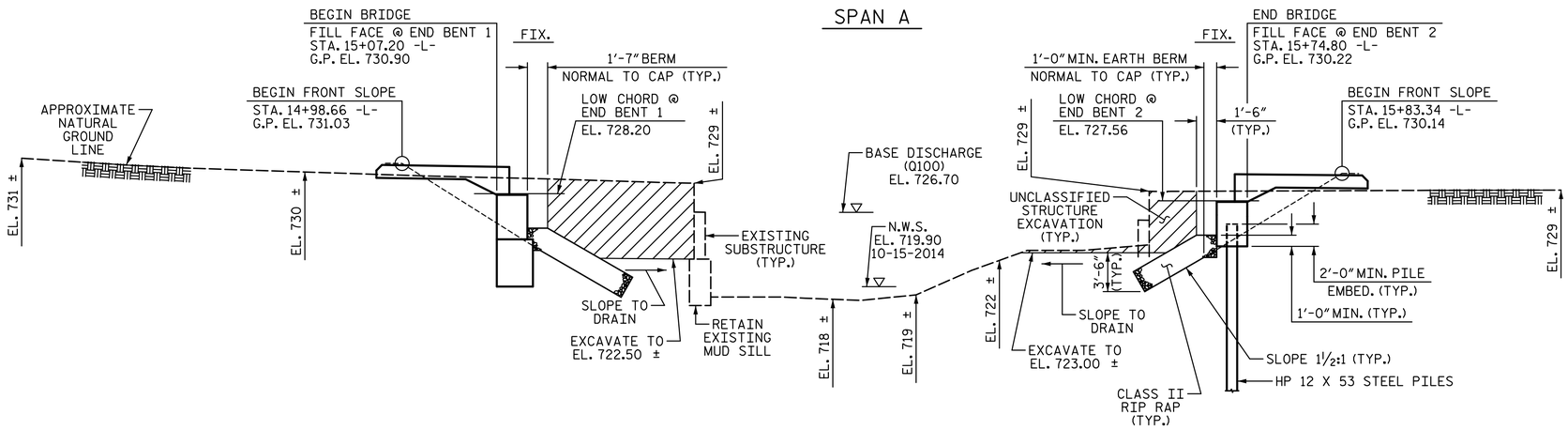

END BENT 1 END BENT 2

SECTION ALONG ℄ SURVEY -L-

(SECTIONS @ END BENTS ARE @ RIGHT ANGLES)

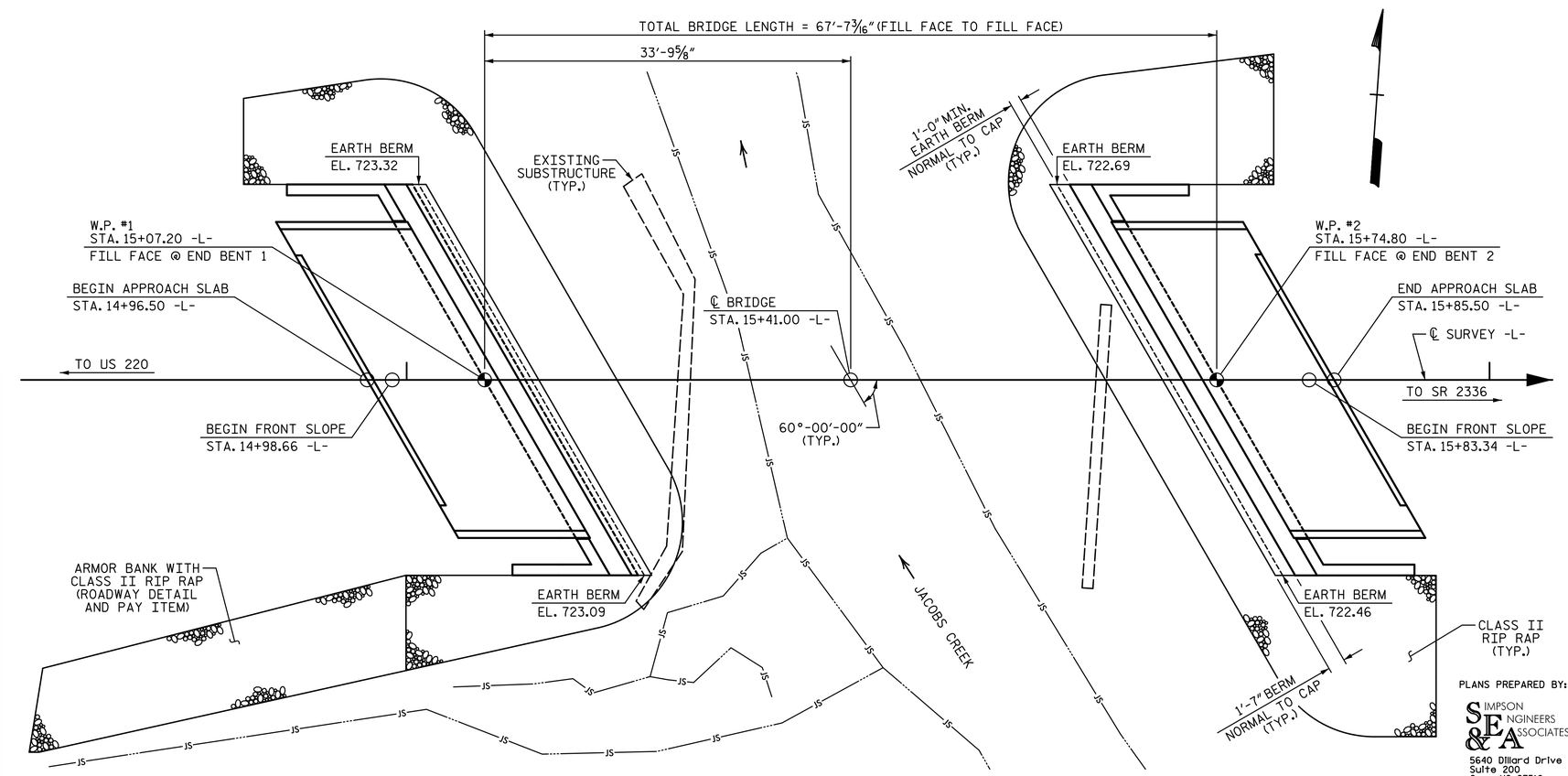

PLAN

(PILES NOT SHOWN IN PLAN VIEW)

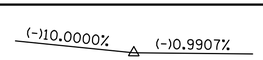

PVI STA. 14+50.00
EL. = 731.46
VC = 120'

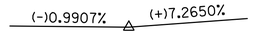

PVI STA. 16+65.00
EL. = 729.33
VC = 160'

GRADE DATA -L-

HYDRAULIC DATA:

DESIGN DISCHARGE	= 1100 CFS
FREQUENCY OF DESIGN FLOOD	= 25 YEAR
DESIGN HIGH WATER ELEVATION	= 725.6
DRAINAGE AREA	= 3.3 SQ. MI.
BASE DISCHARGE (Q 100)	= 1566 CFS
BASE HIGH WATER ELEVATION	= 726.70

OVERTOPPING FLOOD DATA:

OVERTOPPING DISCHARGE	= 2150+ CFS
FREQUENCY OF OVERTOPPING FLOOD	= 500+ YEAR
OVERTOPPING FLOOD ELEVATION	= 730.00 ✱✱

✱✱ OVERTOPPING OCCURS AT ROADWAY SAG AT STA. 16+04.00 -L-

I HEREBY CERTIFY THESE PLANS ARE THE AS-BUILT PLANS

PROJECT NO. 17BP.7.R.30
ROCKINGHAM COUNTY
STATION: 15+41.00 -L-

SHEET 1 OF 2 REPLACES BRIDGE #191

STATE OF NORTH CAROLINA
DEPARTMENT OF TRANSPORTATION
RALEIGH

GENERAL DRAWING

FOR BRIDGE ON SR 2337 (CARLTON RD.) OVER JACOBS CREEK BETWEEN US 220 AND SR 2336

27'-10" CLEAR ROADWAY - 60° SKEW

PLANS PREPARED BY:

SIMPSON ENGINEERS & ASSOCIATES
5640 Dillard Drive
Suite 200
Cary, NC 27518
(919) 852-0468
(919) 852-0598 (Fax)
www.simpsonengr.com
LICENSURE NO. C-2521

NORTH CAROLINA PROFESSIONAL SEAL 11268 ENGINEER BRIDGET S. COX
DocuSigned by: Bridget S. Cox 80307D58B6B4
4/19/2016

REVISIONS						
NO.	BY:	DATE:	NO.	BY:	DATE:	
1			3			
2			4			

SHEET NO. S-1
TOTAL SHEETS 15

DRAWN BY: T. BANKOVICH DATE: 4-16
CHECKED BY: B.S. COX DATE: 4-16
DESIGN ENGINEER OF RECORD: B.S. COX DATE: 4-16

DOCUMENT NOT CONSIDERED FINAL UNLESS ALL SIGNATURES COMPLETED

PROJ:17BP.7.R.30

4/18/2016 2:07:45 PM G:\Projects\2015\Rockingham 191 (17BP7R30)\Structures\Drawings\Final\401_17BP7R30_smu_gd.dgn

DocuSign Envelope ID: D6ECD840-48F9-4E8C-82AB-BDEE07F0314E

LOAD AND RESISTANCE FACTOR RATING (LRFR) SUMMARY FOR PRESTRESSED CONCRETE GIRDERS

LEVEL		VEHICLE	WEIGHT (W) (TONS)	CONTROLLING LOAD RATING	MINIMUM RATING FACTORS (RF)	TONS = W X RF	STRENGTH I LIMIT STATE											SERVICE III LIMIT STATE						COMMENT NUMBER
								MOMENT					SHEAR						MOMENT					
							LIVELOAD FACTORS	DISTRIBUTION FACTORS (DF)	RATING FACTOR	SPAN	GIRDER LOCATION	DISTANCE FROM LEFT END OF SPAN (ft)	DISTRIBUTION FACTORS (DF)	RATING FACTOR	SPAN	GIRDER LOCATION	DISTANCE FROM LEFT END OF SPAN (ft)	LIVELOAD FACTORS	DISTRIBUTION FACTORS (DF)	RATING FACTOR	SPAN	GIRDER LOCATION	DISTANCE FROM LEFT END OF SPAN (ft)	
DESIGN LOAD RATING		HL-93(Inv)	N/A	**1**	1.013	--	1.75	0.248	1.16	65'	EL	31.923	0.652	**1.01**	65'	EL	**6.385**	0.80	0.248	1.12	65'	EL	31.923	
		HL-93(Opr)	N/A	--	1.313	--	1.35	0.248	1.5	65'	EL	31.923	0.652	1.31	65'	EL	6.385	N/A	--	--	--	--	--	
		HS-20(Inv)	36.000	**2**	1.246	44.865	1.75	0.248	1.48	65'	EL	31.923	0.652	**1.25**	65'	EL	**6.385**	0.80	0.248	1.44	65'	EL	31.923	
		HS-20(Opr)	36.000	--	1.616	58.159	1.35	0.248	1.92	65'	EL	31.923	0.652	1.62	65'	EL	6.385	N/A	--	--	--	--	--	
LEGAL LOAD RATING	SV	SNSH	13.500	--	3.163	42.696	1.4	0.248	4.07	65'	EL	31.923	0.652	3.64	65'	EL	6.385	0.80	0.248	3.16	65'	EL	31.923	
		SNGARBS2	20.000	--	2.395	47.893	1.4	0.248	3.08	65'	EL	31.923	0.652	2.61	65'	EL	6.385	0.80	0.248	2.39	65'	EL	31.923	
		SNAGRIS2	22.000	--	2.284	50.247	1.4	0.248	2.94	65'	EL	31.923	0.652	2.43	65'	EL	6.385	0.80	0.248	2.28	65'	EL	31.923	
		SNCOTTS3	27.250	--	1.575	42.917	1.4	0.248	2.03	65'	EL	31.923	0.652	1.82	65'	EL	6.385	0.80	0.248	1.57	65'	EL	31.923	
		SNAGGRS4	34.925	--	1.331	46.469	1.4	0.248	1.71	65'	EL	31.923	0.652	1.53	65'	EL	6.385	0.80	0.248	1.33	65'	EL	31.923	
		SNS5A	35.550	--	1.3	46.22	1.4	0.248	1.67	65'	EL	31.923	0.652	1.55	65'	EL	6.385	0.80	0.248	1.30	65'	EL	31.923	
		SNS6A	39.950	--	1.199	47.899	1.4	0.248	1.54	65'	EL	31.923	0.652	1.42	65'	EL	6.385	0.80	0.248	1.20	65'	EL	31.923	
		SNS7B	42.000	--	1.142	47.965	1.4	0.248	1.47	65'	EL	31.923	0.652	1.4	65'	EL	6.385	0.80	0.248	1.14	65'	EL	31.923	
	TTST	TNAGRIT3	33.000	--	1.464	48.309	1.4	0.248	1.89	65'	EL	31.923	0.652	1.69	65'	EL	6.385	0.80	0.248	1.46	65'	EL	31.923	
		TNT4A	33.075	--	1.472	48.688	1.4	0.248	1.9	65'	EL	31.923	0.652	1.64	65'	EL	6.385	0.80	0.248	1.47	65'	EL	31.923	
		TNT6A	41.600	--	1.209	50.315	1.4	0.248	1.56	65'	EL	31.923	0.652	1.51	65'	EL	6.385	0.80	0.248	1.21	65'	EL	31.923	
		TNT7A	42.000	--	1.219	51.186	1.4	0.248	1.57	65'	EL	31.923	0.652	1.46	65'	EL	6.385	0.80	0.248	1.22	65'	EL	31.923	
		TNT7B	42.000	--	1.269	53.286	1.4	0.248	1.63	65'	EL	31.923	0.652	1.37	65'	EL	6.385	0.80	0.248	1.27	65'	EL	31.923	
		TNAGRIT4	43.000	--	1.201	51.645	1.4	0.248	1.55	65'	EL	31.923	0.652	1.32	65'	EL	6.385	0.80	0.248	1.20	65'	EL	31.923	
		TNAGT5A	45.000	--	1.13	50.836	1.4	0.248	1.45	65'	EL	31.923	0.652	1.32	65'	EL	6.385	0.80	0.248	1.13	65'	EL	31.923	
		TNAGT5B	45.000	**3**	1.114	50.113	1.4	0.248	1.43	65'	EL	31.923	0.652	1.25	65'	EL	6.385	0.80	0.248	**1.11**	65'	EL	**31.923**	

LOAD FACTORS:

DESIGN LOAD RATING FACTORS	LIMIT STATE	γ_{DC}	γ_{DW}
	STRENGTH I	1.25	1.50
	SERVICE III	1.00	1.00

NOTES:

MINIMUM RATING FACTORS ARE BASED ON THE STRENGTH I AND SERVICE III LIMIT STATES.

ALLOWABLE STRESSES FOR SERVICE III LIMIT STATE ARE AS REQUIRED FOR DESIGN.

COMMENTS:

1.
2.
3.
4.

(#) CONTROLLING LOAD RATING

(1) DESIGN LOAD RATING (HL-93)

(2) DESIGN LOAD RATING (HS-20)

(3) LEGAL LOAD RATING **

** SEE CHART FOR VEHICLE TYPE

GIRDER LOCATION

I - INTERIOR GIRDER
EL - EXTERIOR LEFT GIRDER
ER - EXTERIOR RIGHT GIRDER

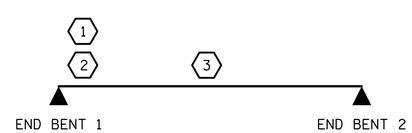

LRFR SUMMARY

FOR SPAN A

PROJECT NO. 17BP.7.R.30

ROCKINGHAM COUNTY

STATION: 15+41.00 -L-

PLANS PREPARED BY:

SIMPSON ENGINEERS & ASSOCIATES

5640 Dillard Drive
Suite 200
Cary, NC 27518
(919) 852-0468
(919) 852-0598 (Fax)
www.simpsonengr.com

LICENSURE NO. C-2521

NORTH CAROLINA PROFESSIONAL SEAL 11268 ENGINEER BETSY S. COX

Documents signed by: Betsy S. Cox
3C5D7D8B6C4D4A4...
4/19/2016

DOCUMENT NOT CONSIDERED FINAL UNLESS ALL SIGNATURES COMPLETED

STATE OF NORTH CAROLINA
DEPARTMENT OF TRANSPORTATION
RALEIGH

LRFR SUMMARY FOR 65' CORED SLAB UNIT 60° SKEW

(NON-INTERSTATE TRAFFIC)

REVISIONS						SHEET NO.
NO.	BY:	DATE:	NO.	BY:	DATE:	S-3
1			3			TOTAL SHEETS
2			4			15

DRAWN BY: T. BANKOVICH DATE: 4-16
CHECKED BY: B.S. COX DATE: 4-16
DESIGN ENGINEER OF RECORD: B.S. COX DATE: 4-16

4/18/2016 2:07:46 PM G:\Projects\2015\Rockingham 191 (17BP7R30)\Structures\Drawings\Final\401_17BP7R30_SMU_lrfr.dgn

DocuSign Envelope ID: D6ECD840-48F9-4E8C-82AB-BDEE07F0314E

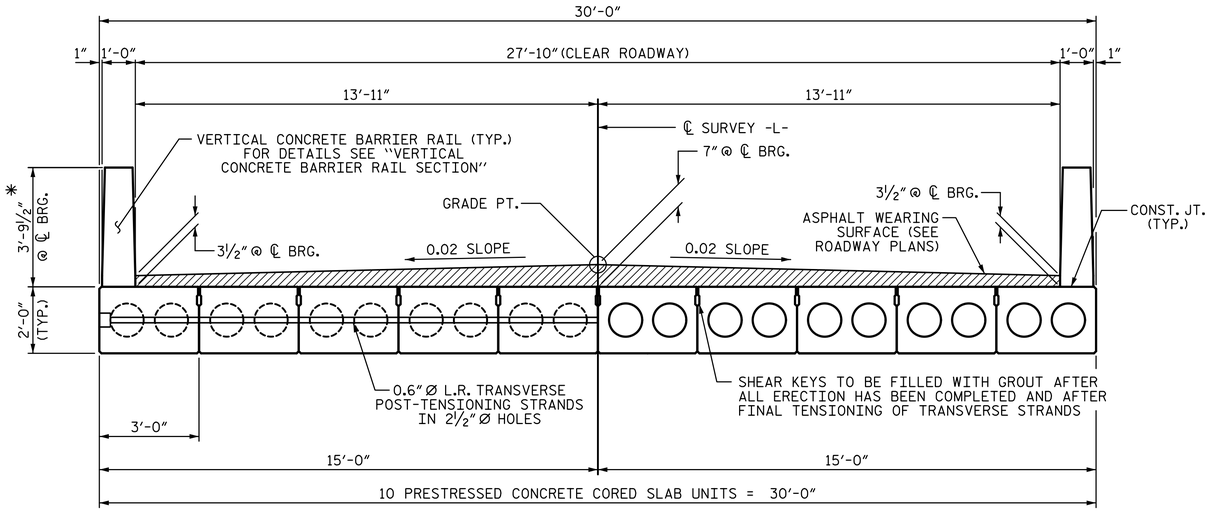

HALF SECTION
AT INTERMEDIATE DIAPHRAGMS

HALF SECTION
THROUGH VOIDS

TYPICAL SECTION

* - THE MAXIMUM BARRIER RAIL HEIGHT AND ASPHALT THICKNESS IS SHOWN. THE HEIGHT OF THE BARRIER RAIL AND ASPHALT THICKNESS VARIES WHILE THE TOP OF THE BARRIER RAIL FOLLOWS THE PROFILE OF THE GUTTERLINE. FOR RAIL HEIGHT DETAILS AND ASPHALT THICKNESS, SEE THE "VERTICAL CONCRETE BARRIER RAIL SECTION" DETAIL.

FIXED END

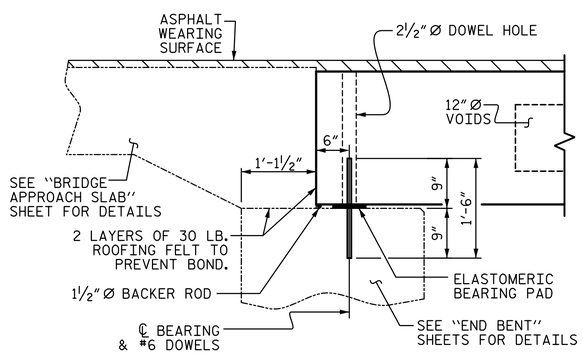

SECTION AT END BENT

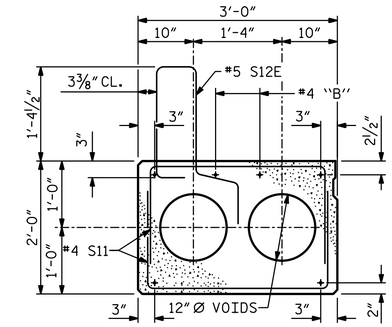

EXTERIOR SLAB SECTION

(FOR PRESTRESSED STRAND LAYOUT, SEE INTERIOR SLAB SECTION)

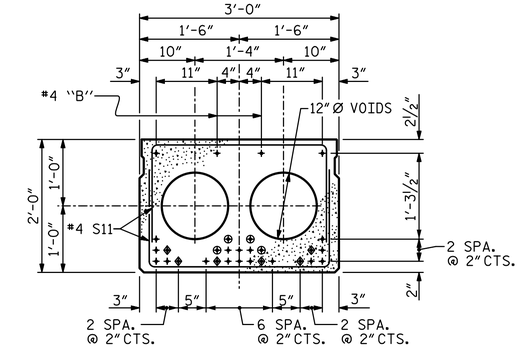

INTERIOR SLAB SECTION

(24 STRANDS REQUIRED)

0.6" Ø LOW RELAXATION STRAND LAYOUT

◈ BOND SHALL BE BROKEN ON THESE STRANDS FOR A DISTANCE OF 12'-0" FROM END OF CORED SLAB UNIT. SEE STANDARD SPECIFICATIONS, ARTICLE 1078-7.

⦿ OPTIONAL FULL LENGTH DEBONDED STRANDS. THESE STRANDS ARE NOT REQUIRED. IF THE FABRICATOR CHOOSES TO INCLUDE THESE STRANDS IN THE CORED SLAB UNIT, THE STRANDS SHALL BE DEBONDED FOR THE FULL LENGTH OF THE UNIT AT NO ADDITIONAL COST. SEE STANDARD SPECIFICATIONS, ARTICLE 1078-7.

DEBONDING LEGEND

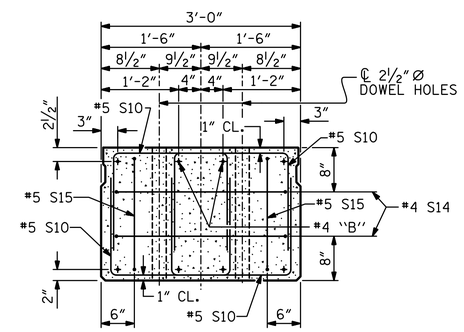

END ELEVATION

SHOWING PLACEMENT OF DOUBLE STIRRUPS AND LOCATION OF DOWEL HOLES. (STRAND LAYOUT NOT SHOWN.) INTERIOR SLAB UNIT SHOWN-EXTERIOR SLAB UNIT SIMILAR EXCEPT SHEAR KEY LOCATION.

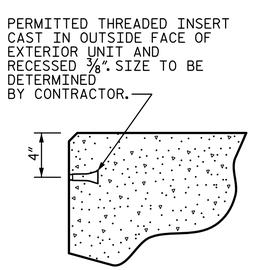

THREADED INSERT DETAIL

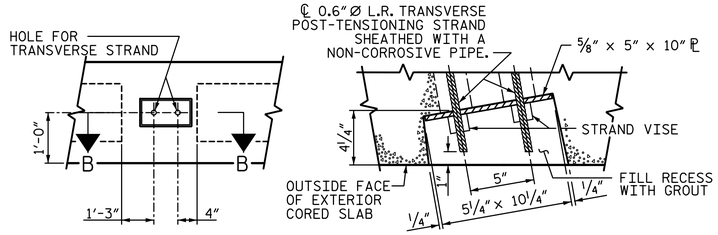

ELEVATION VIEW

SECTION B-B

GROUTED RECESS AT END OF POST-TENSIONED STAND

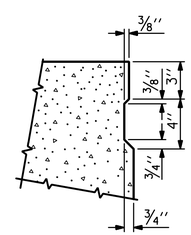

SHEAR KEY DETAIL

NOTE: OMIT SHEAR KEY ON OUTSIDE FACE OF EXTERIOR CORED SLABS.

PROJECT NO. 17BP.7.R.30
ROCKINGHAM COUNTY
STATION: 15+41.00 -L-

SHEET 1 OF 3

STATE OF NORTH CAROLINA
DEPARTMENT OF TRANSPORTATION
RALEIGH

SUPERSTRUCTURE
3'-0" X 2'-0"
PRESTRESSED CONCRETE CORED SLAB UNIT

PLANS PREPARED BY:
SIMPSON ENGINEERS & ASSOCIATES
5640 Dillard Drive
Suite 200
Cary, NC 27518
(919) 852-0468
(919) 852-0598 (Fax)
www.simpsonengr.com
LICENSURE NO. C-2521

NORTH CAROLINA PROFESSIONAL SEAL 11268 ENGINEER BETSY S. COX
Documents signed electronically
4/19/2016

DOCUMENT NOT CONSIDERED FINAL UNLESS ALL SIGNATURES COMPLETED

REVISIONS						SHEET NO.
NO.	BY:	DATE:	NO.	BY:	DATE:	S-4
1			3			TOTAL SHEETS
2			4			15

DRAWN BY: T. BANKOVICH DATE: 4-16
CHECKED BY: B.S. COX DATE: 4-16
DESIGN ENGINEER OF RECORD: B.S. COX DATE: 4-16

4/18/2016 2:07:46 PM G:\Projects\2015\Rockingham 191 (17BP7R30)\Structures\Drawings\Final\401_17BP7R30_SMU_superstructure.dgn

DocuSign Envelope ID: D6ECD840-48F9-4E8C-82AB-BDEE07F0314E

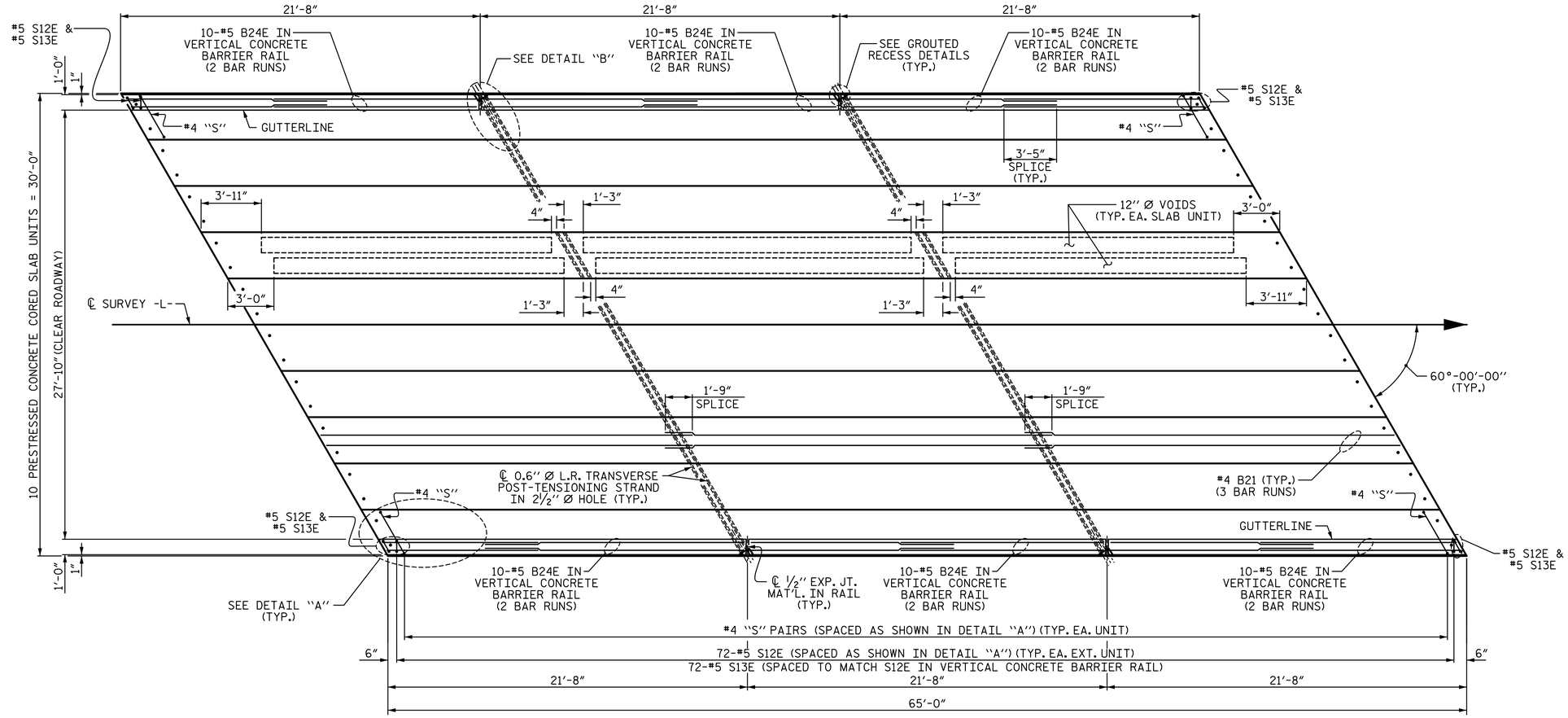

PLAN OF SPAN A

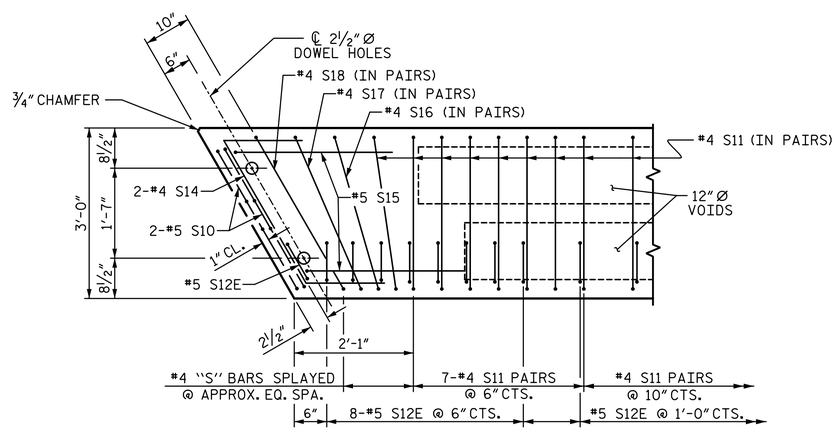

DETAIL "A"

(SIMILAR EACH END OF UNIT)
NOTE: EXTERIOR UNIT SHOWN - INTERIOR UNIT SIMILAR EXCEPT OMIT #5 S12E BARS.

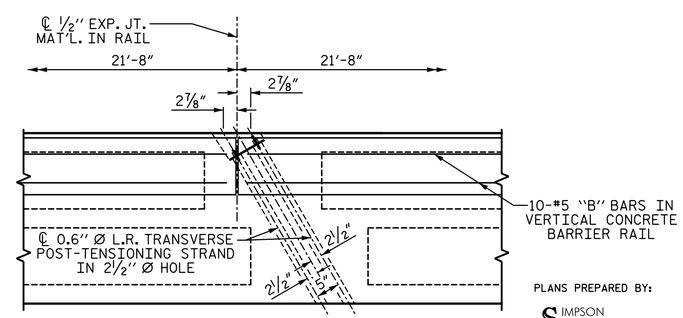

DETAIL "B"

#4 S11 BARS MAY BE SHIFTED AS NECESSARY TO MAINTAIN 1" CLEAR TO GROUTED RECESS AND 2½" Ø TRANSVERSE POST-TENSIONING STRAND HOLES

PROJECT NO. 17BP.7.R.30
ROCKINGHAM COUNTY
STATION: 15+41.00 -L-

SHEET 2 OF 3

STATE OF NORTH CAROLINA
DEPARTMENT OF TRANSPORTATION
RALEIGH

SUPERSTRUCTURE

PLAN OF 65' UNIT 27'-10" CLEAR ROADWAY 60° SKEW

PLANS PREPARED BY:
SIMPSON ENGINEERS & ASSOCIATES
5640 Dillard Drive
Suite 200
Cary, NC 27518
(919) 852-0468
(919) 852-0598 (Fax)
www.simpsonengr.com
LICENSURE NO. C-2521

NORTH CAROLINA PROFESSIONAL SEAL 11268 ENGINEER BETSY S. COX
Documents Signed By: Betsy S. Cox
503D7D5B9D594A...
4/19/2016

DOCUMENT NOT CONSIDERED FINAL UNLESS ALL SIGNATURES COMPLETED

REVISIONS						SHEET NO.
NO.	BY:	DATE:	NO.	BY:	DATE:	S-5
1			3			TOTAL SHEETS
2			4			15

DRAWN BY:	T. BANKOVICH	DATE:	4-16
CHECKED BY:	B.S. COX	DATE:	4-16
DESIGN ENGINEER OF RECORD:	B.S. COX	DATE:	4-16

4/18/2016 2:07:47 PM G:\Projects\2015\Rockingham 191 (17BP7R30)\Structures\Drawings\Final\401_17BP7R30_SMU_superstructure.dgn

DocuSign Envelope ID: D6ECD840-48F9-4E8C-82AB-BDEE07F0314E

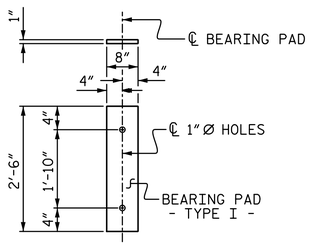

FIXED END
(TYPE I - 20 REQ'D)

ELASTOMERIC BEARING DETAILS

ELASTOMER IN ALL BEARINGS SHALL BE 60 DUROMETER HARDNESS.

BILL OF MATERIAL FOR ONE 65' CORED SLAB UNIT

				EXTERIOR UNIT		INTERIOR UNIT	
BAR	NUMBER	SIZE	TYPE	LENGTH	WEIGHT	LENGTH	WEIGHT
B21	6	#4	STR	22'-10"	92	22'-10"	92
S10	8	#5	3	5'-0"	42	5'-0"	42
S11	158	#4	3	5'-10"	616	5'-10"	616
S12E	74	#5	1	5'-7"	431		
S14	4	#4	4	5'-11"	16	5'-11"	16
S15	4	#5	3	7'-1"	30	7'-1"	30
S16	4	#4	3	5'-11"	16	5'-11"	16
S17	4	#4	3	6'-1"	16	6'-1"	16
S18	4	#4	3	6'-3"	17	6'-3"	17
REINFORCING STEEL LBS.					845		845
"E" EPOXY COATED REINFORCING STEEL LBS.					431		
6000 P.S.I. CONCRETE CU. YDS.					11.2		11.2
0.6"Ø L.R. STRANDS No.					24		24

BAR TYPES

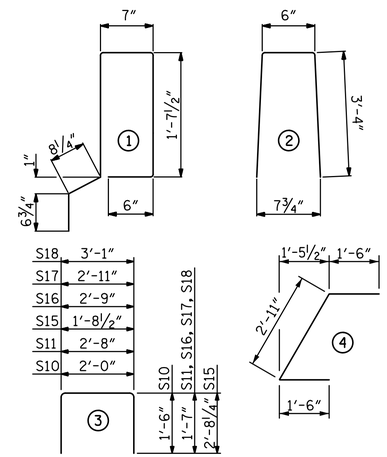

ALL BAR DIMENSIONS ARE OUT TO OUT

NOTES:

ALL PRESTRESSING STRANDS SHALL BE 7-WIRE LOW RELAXATION GRADE 270 STRANDS AND SHALL CONFORM TO AASHTO M203 EXCEPT FOR SAMPLING REQUIREMENTS WHICH SHALL BE IN ACCORDANCE WITH THE STANDARD SPECIFICATIONS.

ALL REINFORCING STEEL CAST WITH THE CORED SLAB SECTIONS SHALL BE GRADE 60 AND SHALL BE INCLUDED IN THE UNIT PRICE BID FOR PRESTRESSED CONCRETE CORED SLABS.

RECESSES FOR TRANSVERSE STRANDS SHALL BE GROUTED AFTER THE TENSIONING OF THE STRANDS.

THE 2½"Ø DOWEL HOLES AT FIXED ENDS OF SLAB SECTIONS SHALL BE FILLED WITH NON-SHRINK GROUT.

THE BACKER RODS SHALL CONFORM TO THE REQUIREMENTS OF TYPE M BOND BREAKER. SEE SECTION 1028 OF THE STANDARD SPECIFICATIONS.

WHEN CORED SLABS ARE CAST, AN INTERNAL HOLD-DOWN SYSTEM SHALL BE EMPLOYED TO PREVENT VOIDS FROM RISING OR MOVING SIDEWAYS. AT LEAST SIX WEEKS PRIOR TO CASTING CORED SLABS, THE CONTRACTOR SHALL SUBMIT TO THE ENGINEER FOR REVIEW AND COMMENT, DETAILED DRAWINGS OF THE PROPOSED HOLD-DOWN SYSTEM. IN ADDITION TO STRUCTURAL DETAILS, LOCATION AND SPACING OF THE HOLD-DOWNS SHALL BE INDICATED.

THE TRANSFER OF LOAD FROM THE ANCHORAGES TO THE CORED SLAB UNIT SHALL BE DONE WHEN THE CONCRETE HAS REACHED A COMPRESSIVE STRENGTH OF NOT LESS THAN THE REQUIRED STRENGTH SHOWN IN THE "CONCRETE RELEASE STRENGTH" TABLE.

ALL REINFORCING STEEL IN VERTICAL CONCRETE BARRIER RAILS SHALL BE EPOXY COATED.

PRESTRESSING STRANDS SHALL BE CUT FLUSH WITH THE CORED SLAB UNIT ENDS.

APPLY EPOXY PROTECTIVE COATING TO CORED SLAB UNIT ENDS.

GROOVED CONTRACTION JOINTS, ½" IN DEPTH, SHALL BE TOOLED IN ALL EXPOSED FACES OF THE BARRIER RAIL AND IN ACCORDANCE WITH ARTICLE 825-10(B) OF THE STANDARD SPECIFICATIONS. A CONTRACTION JOINT SHALL BE LOCATED AT EACH THIRD POINT BETWEEN BARRIER RAIL EXPANSION JOINTS. ONLY ONE CONTRACTION JOINT IS REQUIRED AT MIDPOINT OF BARRIER RAIL SEGMENTS LESS THAN 20 FEET IN LENGTH AND NO CONTRACTION JOINTS ARE REQUIRED FOR THOSE SEGMENTS LESS THAN 10 FEET IN LENGTH.

FLAME CUTTING OF THE TRANSVERSE POST-TENSIONING STRAND IS NOT ALLOWED.

MAINTAIN A SYMMETRIC TENSION FORCE BETWEEN EACH PAIR OF TRANSVERSE POST TENSIONING STRANDS IN THE DIAPHRAGM.

THE #4 S11 STIRRUPS MAY BE SHIFTED AS NECESSARY TO MAINTAIN 1" CLEAR TO THE GROUTED RECESS.

FOR GROUT FOR STRUCTURES, SEE SPECIAL PROVISIONS.

THE PERMITTED THREADED INSERTS ARE DETAILED AS AN OPTION FOR THE CONTRACTOR TO ATTACH FALSEWORK AND FORMWORK DURING CONSTRUCTION.

THE PERMITTED THREADED INSERTS IN THE EXTERIOR UNITS SHALL BE SIZED BY THE CONTRACTOR, SPACED AT 4'-0" CENTERS AND GALVANIZED IN ACCORDANCE WITH SECTION 1076 OF THE STANDARD SPECIFICATIONS. STAINLESS STEEL THREADED INSERTS MAY BE USED AS AN ALTERNATE.

THE PERMITTED THREADED INSERTS SHALL BE GROUTED BY THE CONTRACTOR IMMEDIATELY FOLLOWING REMOVAL OF THE FALSEWORK.

THE COST OF THE PERMITTED THREADED INSERTS SHALL BE INCLUDED IN THE PRICE BID FOR THE PRECAST UNITS.

GUTTERLINE ASPHALT THICKNESS & RAIL HEIGHT

	ASPHALT OVERLAY THICKNESS @ MID-SPAN	RAIL HEIGHT @ MID-SPAN
65' UNITS	2⅛"	3'-8⅛"

DEAD LOAD DEFLECTION AND CAMBER

	3'-0"x 2'-0"
65' CORED SLAB UNIT	0.6"Ø L.R. STRAND
CAMBER (SLAB ALONE IN PLACE)	1⅞" ↑
DEFLECTION DUE TO SUPERIMPOSED DEAD LOAD✱✱	½" ↓
FINAL CAMBER	1⅜" ↑

✱✱ INCLUDES FUTURE WEARING SURFACE

CONCRETE RELEASE STRENGTH

UNIT	PSI
65' UNITS	4800

CORED SLABS REQUIRED

	NUMBER	LENGTH	TOTAL LENGTH
65' UNIT			
EXTERIOR C.S.	2	65'-0"	130'-0"
INTERIOR C.S.	8	65'-0"	520'-0"
TOTAL	10	65'-0"	650'-0"

GRADE 270 STRANDS

	0.6"Ø L.R.
AREA (SQUARE INCHES)	0.217
ULTIMATE STRENGTH (LBS. PER STRAND)	58,600
APPLIED PRESTRESS (LBS. PER STRAND)	43,950

BILL OF MATERIAL FOR VERTICAL CONCRETE BARRIER RAIL

BAR	BARS PER PAIR OF EXTERIOR UNITS	TOTAL NO.	SIZE	TYPE	LENGTH	WEIGHT
	65' UNIT					
B24E	120	120	#5	STR	12'-10"	1606
S13E	148	148	#5	2	7'-2"	1106
"E" EPOXY COATED REINFORCING STEEL				LBS.		2712
CLASS AA CONCRETE				CU.YDS.		16.9
TOTAL VERTICAL CONCRETE BARRIER RAIL				LN. FT.		130.29

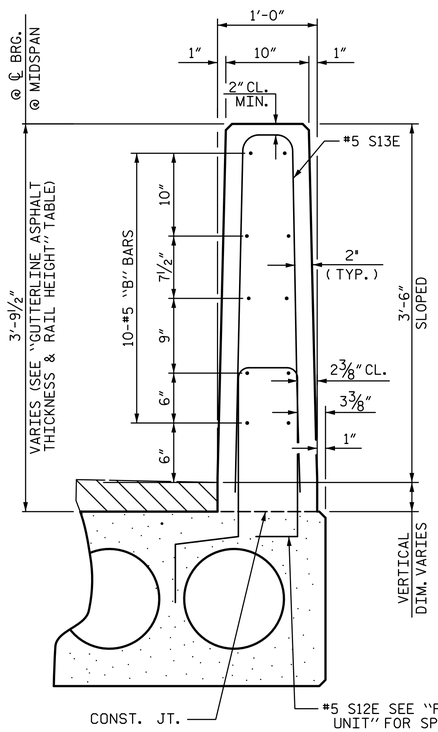

SECTION THRU RAIL

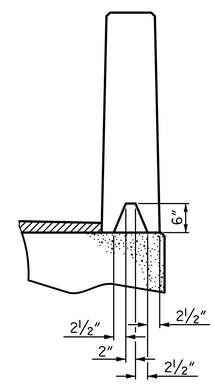

SECTION S-S

AT DAM IN OPEN JOINT
(THIS IS TO BE USED ONLY WHEN SLIP FORM IS USED)

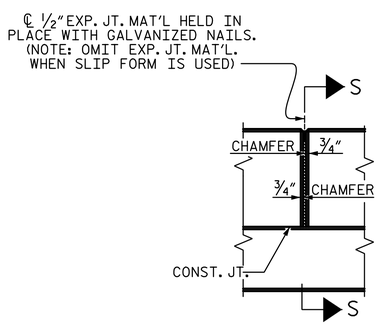

ELEVATION AT EXPANSION JOINTS

VERTICAL CONCRETE BARRIER RAIL DETAILS

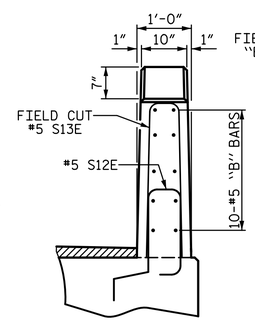

END VIEW

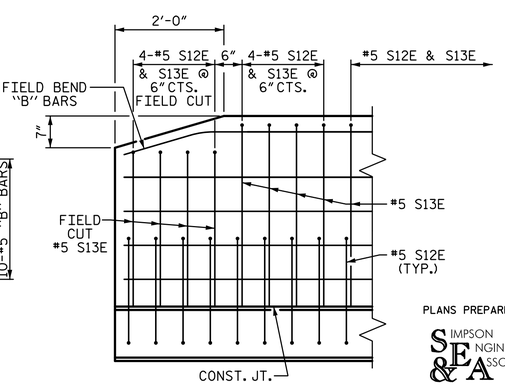

SIDE VIEW

END OF RAIL DETAILS

PROJECT NO. 17BP.7.R.30
ROCKINGHAM COUNTY
STATION: 15+41.00 -L-

SHEET 3 OF 3

STATE OF NORTH CAROLINA
DEPARTMENT OF TRANSPORTATION
RALEIGH

SUPERSTRUCTURE
3'-0"x 2'-0"
PRESTRESSED CONCRETE CORED SLAB UNIT

PLANS PREPARED BY:
SIMPSON ENGINEERS & ASSOCIATES
5640 Dillard Drive
Suite 200
Cary, NC 27518
(919) 852-0468
(919) 852-0598 (Fax)
www.simpsonengr.com
LICENSURE NO. C-2521

NORTH CAROLINA PROFESSIONAL SEAL 11268 ENGINEER BETSY S. COX
Docu Signed by: Betsy S. Cox
4/19/2016

DOCUMENT NOT CONSIDERED FINAL UNLESS ALL SIGNATURES COMPLETED

REVISIONS						SHEET NO.
NO.	BY:	DATE:	NO.	BY:	DATE:	S-6
1			3			TOTAL SHEETS
2			4			15

DRAWN BY: T. BANKOVICH DATE: 4-16
CHECKED BY: B.S. COX DATE: 4-16
DESIGN ENGINEER OF RECORD: B.S. COX DATE: 4-16

4/18/2016 2:07:47 PM G:\Projects\2015\Rockingham 191 (17BP7R30)\Structures\Drawings\Final\401_17BP7R30_SMU_superstructure.dgn

DocuSign Envelope ID: D6ECD840-48F9-4E8C-82AB-BDEE07F0314E

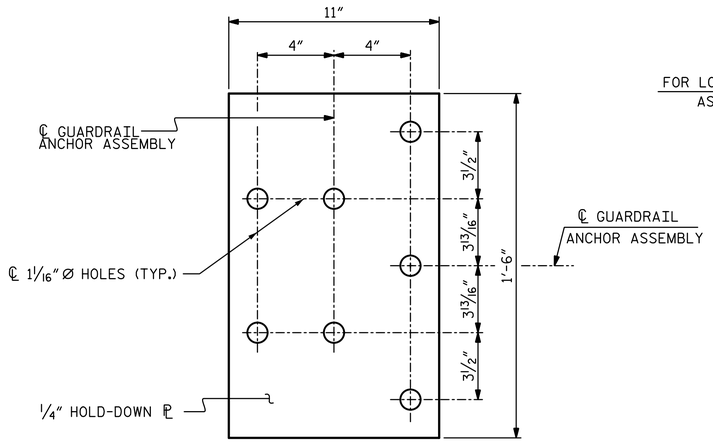

PLAN

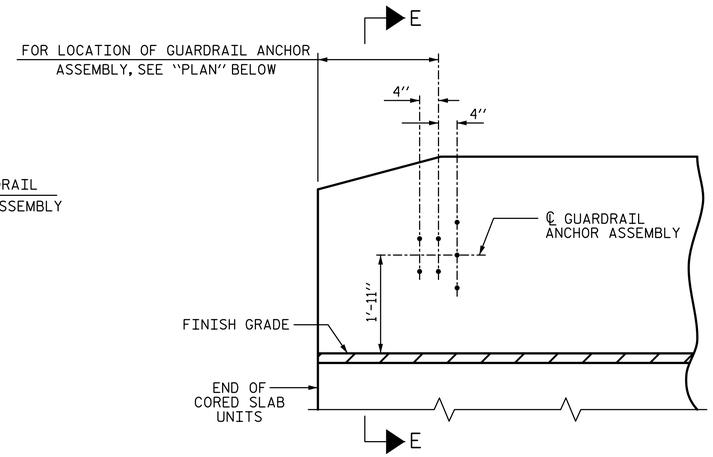

ELEVATION

NOTES:

THE GUARDRAIL ANCHOR ASSEMBLY SHALL CONSIST OF A 1/4" HOLD DOWN PLATE AND 7 - 7/8" Ø BOLTS WITH NUTS AND WASHERS.

THE HOLD-DOWN PLATE SHALL CONFORM TO AASHTO M270 GRADE 36. AFTER FABRICATION, THE HOLD-DOWN PLATE SHALL BE HOT-DIP GALVANIZED IN ACCORDANCE WITH AASHTO M111.

BOLTS SHALL CONFORM TO THE REQUIREMENTS OF ASTM A307 AND NUTS SHALL CONFORM TO THE REQUIREMENTS OF AASHTO M291. BOLTS, NUTS AND WASHERS SHALL BE GALVANIZED. (AT THE CONTRACTOR'S OPTION, STAINLESS STEEL BOLTS, NUTS AND WASHERS MAY BE USED AS AN ALTERNATE FOR THE 7/8" Ø GALVANIZED BOLTS, NUTS AND WASHERS. THEY SHALL CONFORM TO OR EXCEED THE MECHANICAL REQUIREMENTS OF ASTM A307. THE USE OF THIS ALTERNATE SHALL BE APPROVED BY THE ENGINEER.)

THE GUARDRAIL ANCHOR ASSEMBLY IS REQUIRED AT ALL POINTS WHERE APPROACH GUARDRAIL IS TO BE ATTACHED TO THE END OF BARRIER RAIL. FOR POINTS OF ATTACHMENT, SEE SKETCH.

AFTER INSTALLATION, THE EXPOSED THREAD OF THE BOLT SHALL BE BURRED WITH A SHARP POINTED TOOL.

THE COST OF THE GUARDRAIL ANCHOR ASSEMBLY SHALL BE INCLUDED IN THE UNIT CONTRACT PRICE BID FOR VERTICAL CONCRETE BARRIER RAIL.

THE VERTICAL REINFORCING BARS MAY BE SHIFTED SLIGHTLY IN THE VERTICAL CONCRETE BARRIER RAIL TO CLEAR ASSEMBLY BOLTS.

THE 1 1/4" Ø HOLES SHALL BE FORMED OR DRILLED WITH A CORE BIT. IMPACT TOOLS WILL NOT BE PERMITTED. ANY CONCRETE DAMAGED BY THIS WORK SHALL BE REPAIRED TO THE SATISFACTION OF THE ENGINEER.

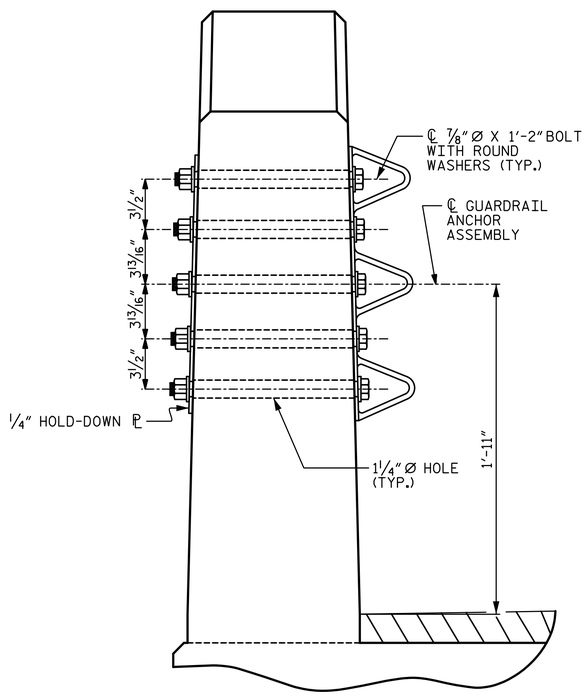

SECTION E-E

GUARDRAIL ANCHOR ASSEMBLY DETAILS

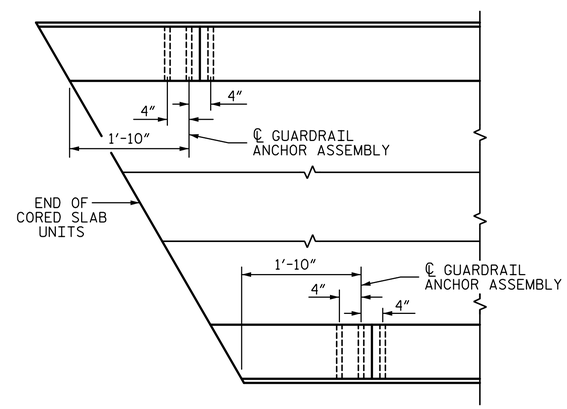

PLAN

LOCATION OF ANCHORS FOR GUARDRAIL

(END BENT 1 SHOWN, END BENT 2 SIMILAR.)

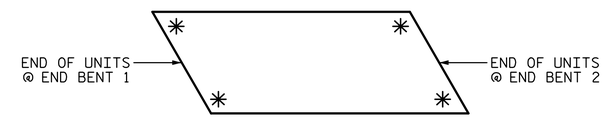

SKETCH SHOWING POINTS OF ATTACHMENT

✳ DENOTES GUARDRAIL ANCHOR ASSEMBLY

PROJECT NO. 17BP.7.R.30

ROCKINGHAM COUNTY

STATION: 15+41.00 -L-

STATE OF NORTH CAROLINA
DEPARTMENT OF TRANSPORTATION
RALEIGH

SUPERSTRUCTURE

GUARDRAIL ANCHORAGE FOR VERTICAL CONCRETE BARRIER RAIL

PLANS PREPARED BY:

SIMPSON ENGINEERS & ASSOCIATES
5640 Dillard Drive
Suite 200
Cary, NC 27518
(919) 852-0468
(919) 852-0598 (Fax)
www.simpsonengr.com
LICENSURE NO. C-2521

NORTH CAROLINA PROFESSIONAL SEAL 11268 ENGINEER BETSY S. COX

Docu Signed by: Betsy S. Cox
803D7D5B9C0E4E...
4/19/2016

DOCUMENT NOT CONSIDERED FINAL UNLESS ALL SIGNATURES COMPLETED

DRAWN BY:	T. BANKOVICH	DATE:	4-16
CHECKED BY:	B.S. COX	DATE:	4-16
DESIGN ENGINEER OF RECORD:	B.S. COX	DATE:	4-16

REVISIONS								SHEET NO.
NO.	BY:	DATE:	NO.	BY:	DATE:			S-7
1			3					TOTAL SHEETS
2			4					15

4/18/2016 2:07:47 PM G:\Projects\2015\Rockingham 191 (17BP7R30)\Structures\Drawings\Final\401_17BP7R30_SMU_superstructure.dgn

DocuSign Envelope ID: 61BBD2F3-877F-4B0C-A3C7-61BFA1FB2806

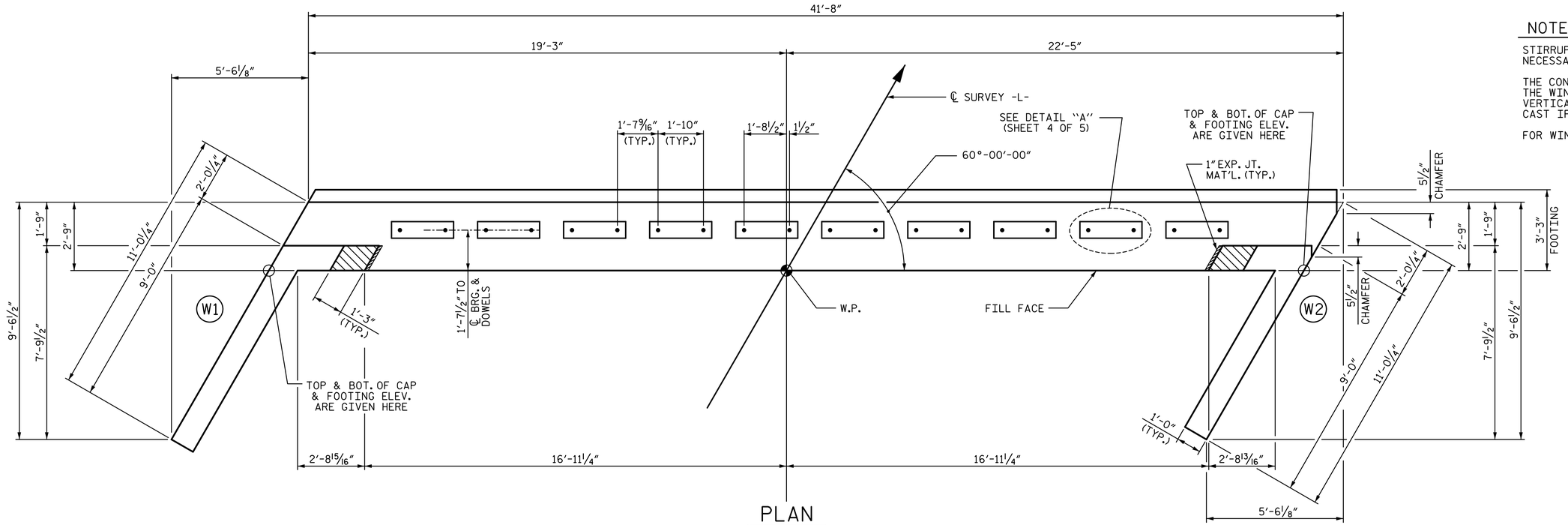

PLAN

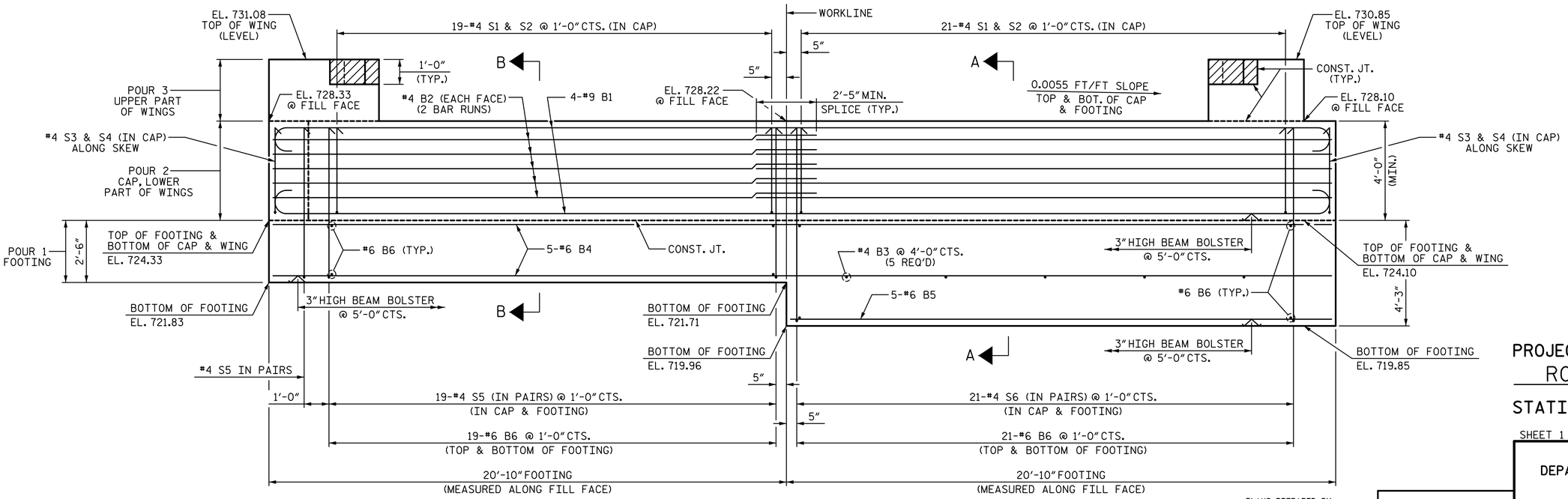

ELEVATION

WINGS NOT SHOWN FOR CLARITY.
FOR SECTION A-A AND SECTION B-B, SEE SHEET 4 OF 5.

NOTES:

STIRRUPS IN CAP MAY BE SHIFTED AS NECESSARY TO CLEAR DOWELS.

THE CONCRETE IN THE SHADED AREA OF THE WING SHALL BE POURED AFTER THE VERTICAL CONCRETE BARRIER RAIL IS CAST IF SLIP FORMING IS USED.

FOR WING DETAILS, SEE SHEET 3 OF 5.

PROJECT NO. 17BP.7.R.30
ROCKINGHAM COUNTY
STATION: 15+41.00 -L-

SHEET 1 OF 5

STATE OF NORTH CAROLINA
DEPARTMENT OF TRANSPORTATION
RALEIGH

SUBSTRUCTURE

END BENT 1

PLANS PREPARED BY:
SIMPSON ENGINEERS & ASSOCIATES
5640 Dillard Drive
Suite 200
Cary, NC 27518
(919) 852-0468
(919) 852-0598 (Fax)
www.simpsonengr.com
LICENSURE NO. C-2521

NORTH CAROLINA PROFESSIONAL SEAL 11268 ENGINEER BETSY S. COX
DocuSigned by: Betsy
B03D7D5B6B0B4AE...
4/19/2016

DOCUMENT NOT CONSIDERED FINAL UNLESS ALL SIGNATURES COMPLETED

REVISIONS						
NO.	BY:	DATE:	NO.	BY:	DATE:	
1			3			
2			4			

SHEET NO. S-8
TOTAL SHEETS 15

DRAWN BY: T. BANKOVICH DATE: 4-16
CHECKED BY: B.S. COX DATE: 4-16
DESIGN ENGINEER OF RECORD: B.S. COX DATE: 4-16

4/18/2016 2:07:47 PM G:\Projects\2015\Rockingham 191 (17BP7R30)\Structures\Drawings\Final\401_17BP7R30_SMU_substructure.dgn

DocuSign Envelope ID: 61BBD2F3-877F-4B0C-A3C7-61BFA1FB2806

4/18/2016 2:07:48 PM G:\Projects\2015\Rockingham 191 (17BP7R30)\Structures\Drawings\Final\401_17BP7R30_SMU_substructure.dgn

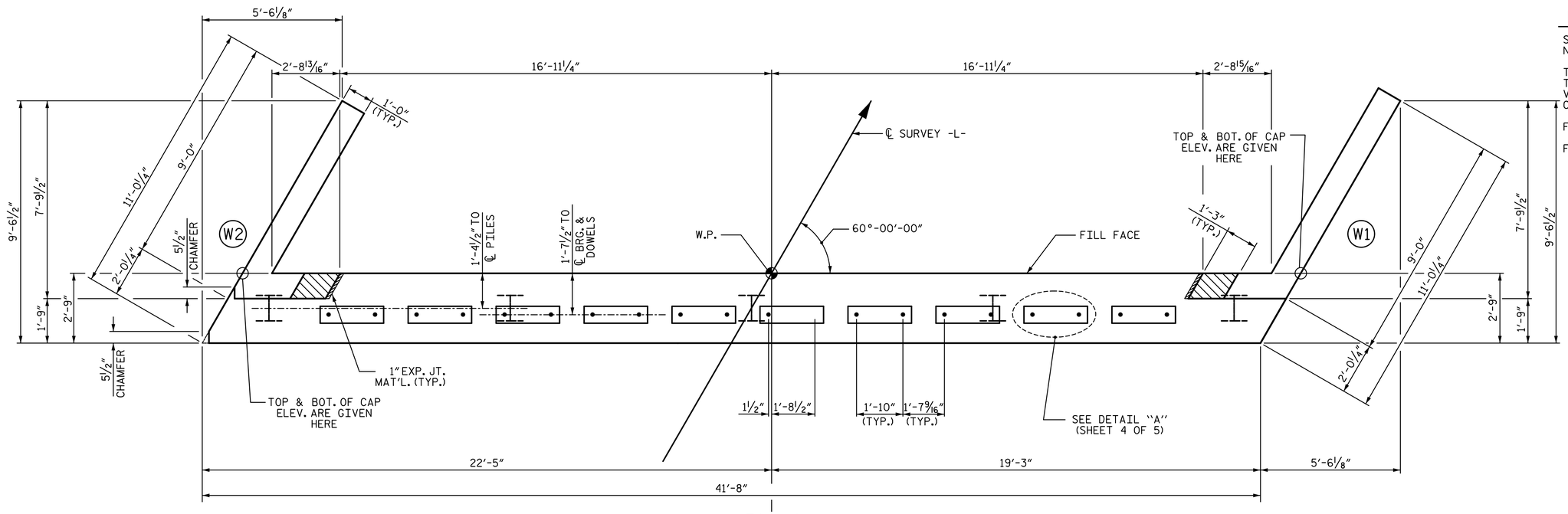

PLAN

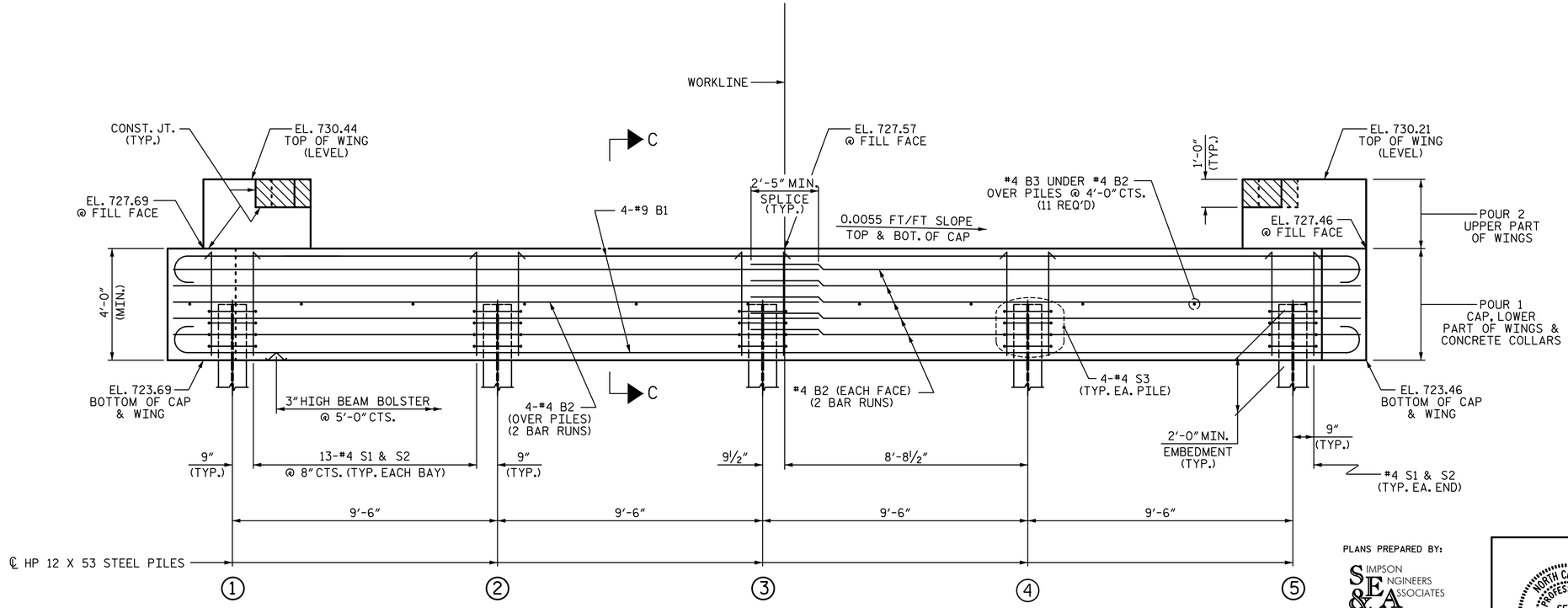

ELEVATION

WINGS NOT SHOWN FOR CLARITY.
FOR SECTION C-C, SEE SHEET 5 OF 5.
CONCRETE COLLARS FOR STEEL PILES NOT SHOWN IN PLAN AND ELEVATION VIEWS FOR CLARITY.
SEE "CORROSION PROTECTION FOR STEEL PILES DETAIL", SHEET 5 OF 5.

NOTES:

STIRRUPS IN CAP MAY BE SHIFTED AS NECESSARY TO CLEAR DOWELS.

THE CONCRETE IN THE SHADED AREA OF THE WING SHALL BE POURED AFTER THE VERTICAL CONCRETE BARRIER RAIL IS CAST IF SLIP FORMING IS USED.

FOR PILE SPLICE DETAILS, SEE SHEET 5 OF 5.

FOR WING DETAILS, SEE SHEET 3 OF 5.

TOP OF PILE ELEVATIONS	
1	725.68
2	725.63
3	725.57
4	725.52
5	725.47

PROJECT NO. 17BP.7.R.30
ROCKINGHAM COUNTY
STATION: 15+41.00 -L-

SHEET 2 OF 5

STATE OF NORTH CAROLINA
DEPARTMENT OF TRANSPORTATION
RALEIGH

SUBSTRUCTURE

END BENT 2

PLANS PREPARED BY:
SIMPSON ENGINEERS & ASSOCIATES
5640 Dillard Drive
Suite 200
Cary, NC 27518
(919) 852-0468
(919) 852-0598 (Fax)
www.slmpsonengr.com
LICENSURE NO. C-2521

NORTH CAROLINA PROFESSIONAL SEAL 11268 ENGINEER BETSY S. COX
Documents by: Betsy S. Cox
803D7D5B9D994EF...
4/19/2016

DOCUMENT NOT CONSIDERED FINAL UNLESS ALL SIGNATURES COMPLETED

REVISIONS							SHEET NO.
NO.	BY:	DATE:	NO.	BY:	DATE:		S-9
1			3				TOTAL SHEETS
2			4				15

DRAWN BY:	T. BANKOVICH	DATE:	4-16
CHECKED BY:	B.S. COX	DATE:	4-16
DESIGN ENGINEER OF RECORD:	B.S. COX	DATE:	4-16

DocuSign Envelope ID: 61BBD2F3-877F-4B0C-A3C7-61BFA1FB2806

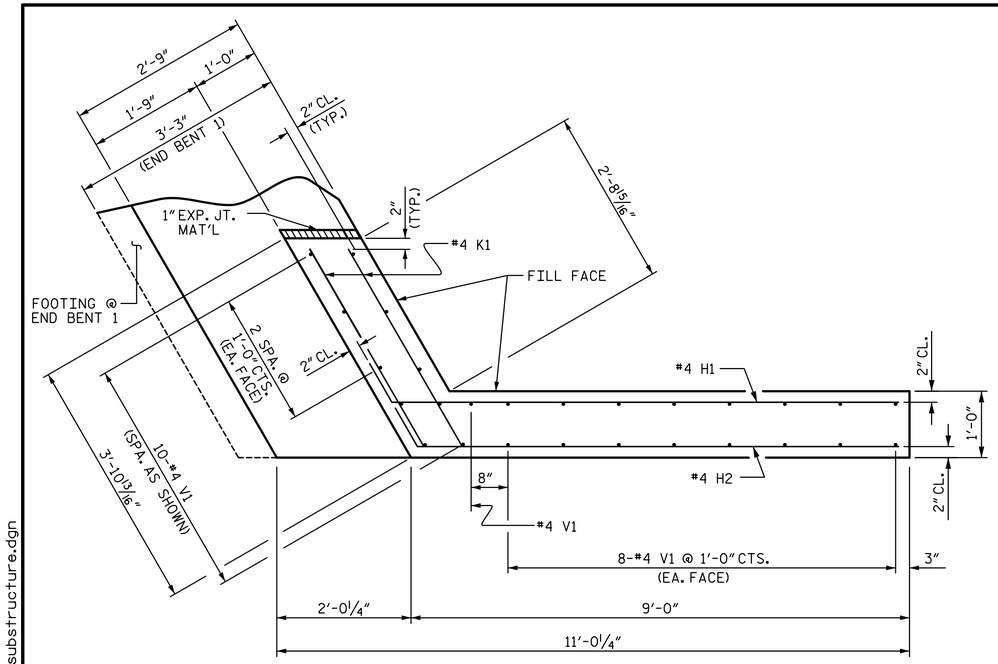

PLAN OF WING (W1)

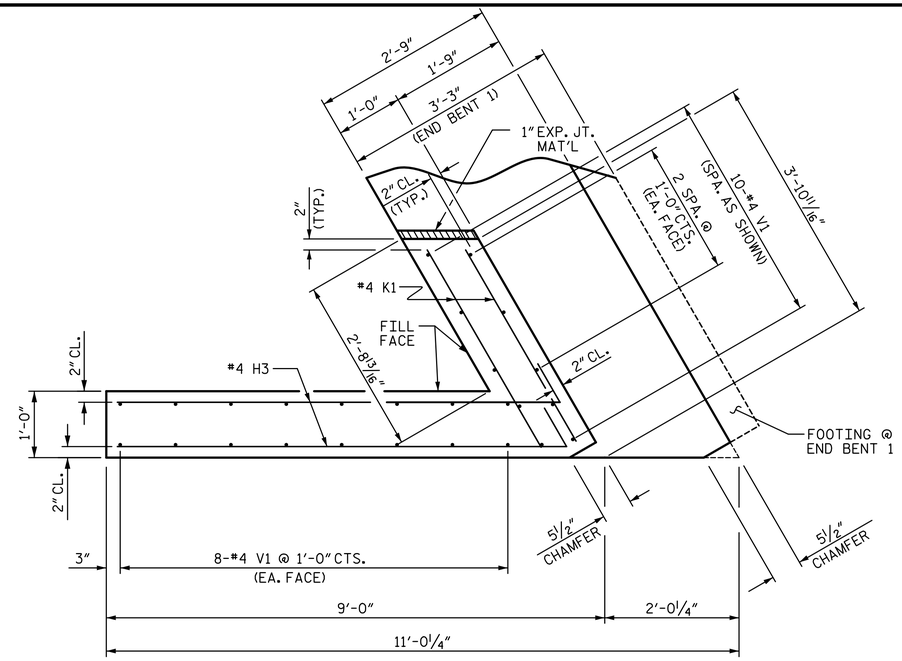

PLAN OF WING (W2)

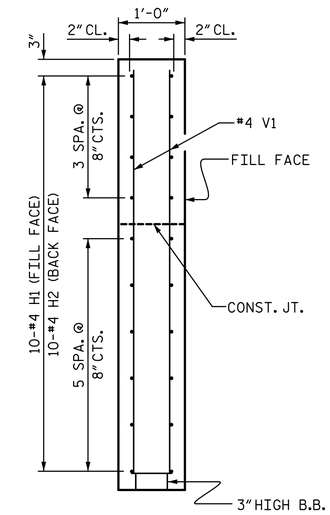

SECTION X-X

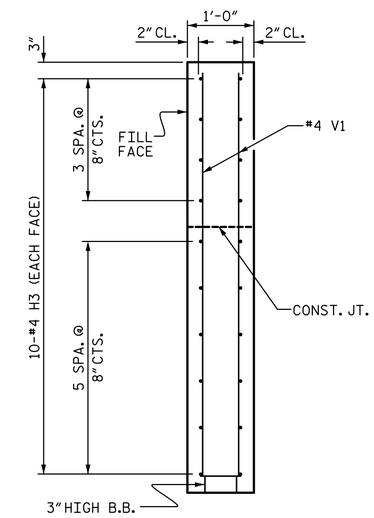

SECTION Y-Y

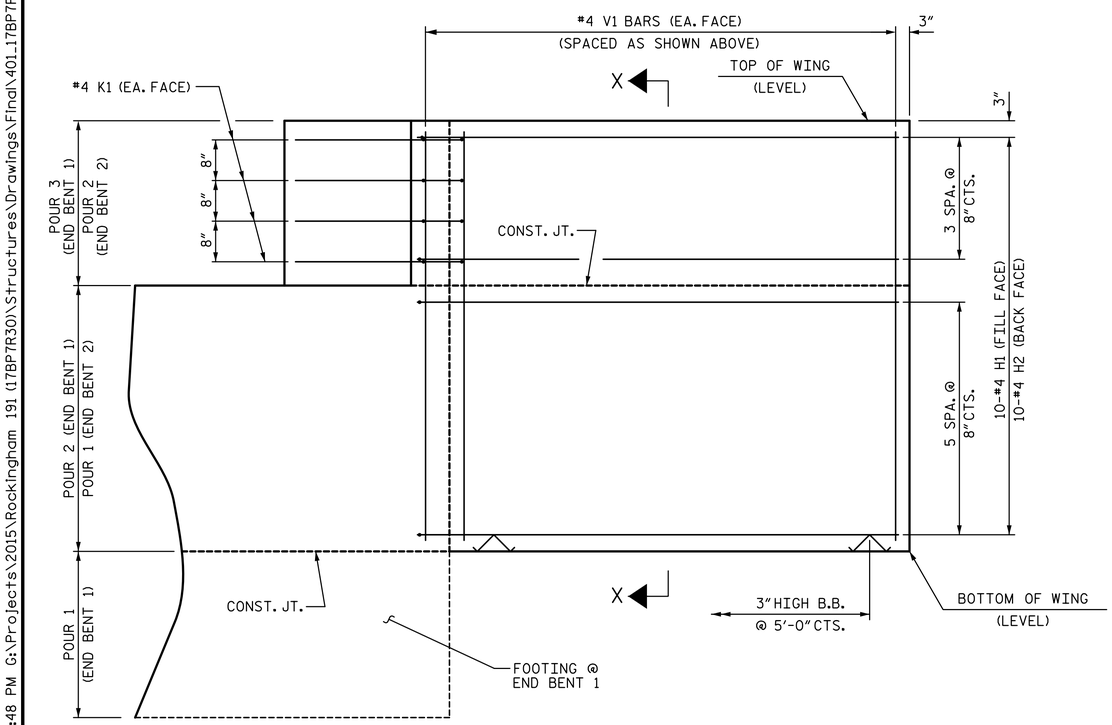

ELEVATION OF WING (W1)

FOOTING @ END BENT 1 ONLY
(SEE SHEET 1 OF 5)

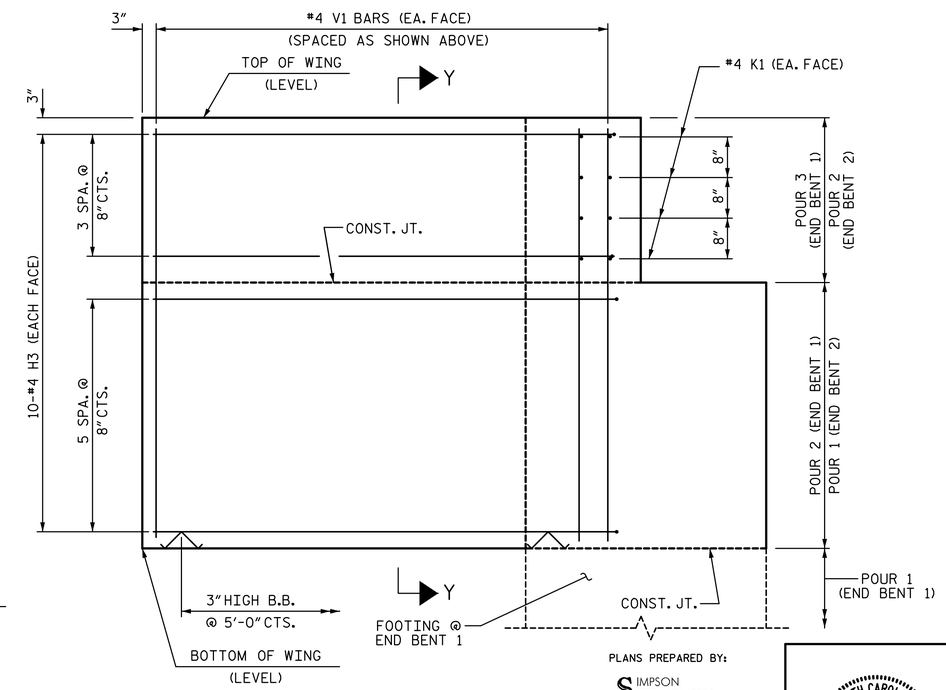

ELEVATION OF WING (W2)

FOOTING @ END BENT 1 ONLY
(SEE SHEET 1 OF 5)

WING DETAILS

PROJECT NO. 17BP.7.R.30
ROCKINGHAM COUNTY
STATION: 15+41.00 -L-

SHEET 3 OF 5

STATE OF NORTH CAROLINA
DEPARTMENT OF TRANSPORTATION
RALEIGH
SUBSTRUCTURE

END BENT
WING DETAILS

PLANS PREPARED BY:
SIMPSON ENGINEERS & ASSOCIATES
5640 Dillard Drive
Suite 200
Cary, NC 27518
(919) 852-0468
(919) 852-0598 (Fax)
www.slmpsonengr.com
LICENSURE NO. C-2521

NORTH CAROLINA PROFESSIONAL SEAL 11268 ENGINEER BETSY S. COX
Betsy S. Cox
4/19/2016

DOCUMENT NOT CONSIDERED FINAL UNLESS ALL SIGNATURES COMPLETED

DRAWN BY:	T. BANKOVICH	DATE:	4-16
CHECKED BY:	B.S. COX	DATE:	4-16
DESIGN ENGINEER OF RECORD:	B.S. COX	DATE:	4-16

REVISIONS						SHEET NO.
NO.	BY:	DATE:	NO.	BY:	DATE:	S-10
1			3			TOTAL SHEETS
2			4			15

4/18/2016 2:07:48 PM G:\Projects\2015\Rockingham 191 (17BP7R30)\Structures\Drawings\Final\401_17BP7R30_SMU_substructure.dgn

DocuSign Envelope ID: 61BBD2F3-877F-4B0C-A3C7-61BFA1FB2806

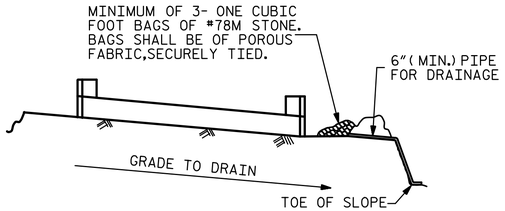

BAGGED STONE AND PIPE SHALL BE PLACED IMMEDIATELY AFTER COMPLETION OF END BENT EXCAVATION. PIPE MAY BE EITHER CONCRETE, CORRUGATED STEEL, CORRUGATED ALUMINUM ALLOY, OR CORRUGATED PLASTIC. PERFORATED PIPE WILL NOT BE ALLOWED.

BAGGED STONE SHALL REMAIN IN PLACE UNTIL THE ENGINEER DIRECTS THAT IT BE REMOVED. THE CONTRACTOR SHALL REMOVE AND DISPOSE OF SILT ACCUMULATIONS AT BAGGED STONE WHEN SO DIRECTED BY THE ENGINEER. BAGS SHALL BE REMOVED AND REPLACED WHENEVER THE ENGINEER DETERMINES THAT THEY HAVE DETERIORATED AND LOST THEIR EFFECTIVENESS.

NO SEPARATE PAYMENT WILL BE MADE FOR THIS WORK AND THE ENTIRE COST OF THIS WORK SHALL BE INCLUDED IN THE UNIT CONTRACT PRICE BID FOR THE SEVERAL PAY ITEMS.

TEMPORARY DRAINAGE AT END BENT

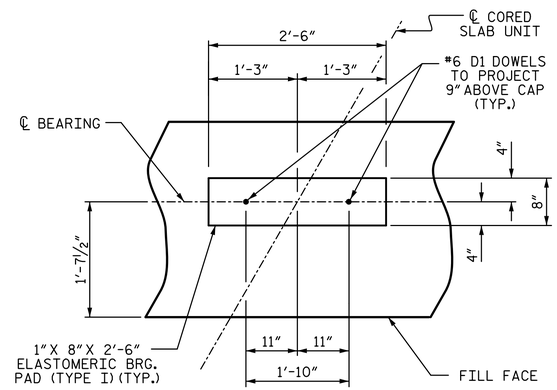

DETAIL "A"

(END BENT 1 SHOWN, END BENT 2 SIMILAR BY ROTATION)
(END BENT 1 FOOTING NOT SHOWN)

BAR TYPES

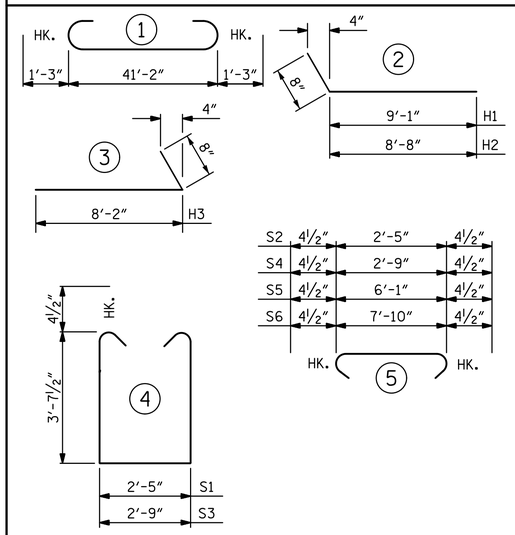

ALL BAR DIMENSIONS ARE OUT TO OUT.

BILL OF MATERIAL

END BENT 1

BAR	NO.	SIZE	TYPE	LENGTH	WEIGHT
B1	8	#9	1	43'-8"	1188
B2	20	#4	STR	21'-11"	293
B3	5	#4	STR	2'-11"	10
B4	10	#6	STR	41'-4"	621
B5	5	#6	STR	20'-6"	154
B6	80	#6	STR	2'-11"	350
D1	20	#6	STR	1'-6"	45
H1	10	#4	2	9'-9"	65
H2	10	#4	2	9'-4"	62
H3	20	#4	3	8'-10"	118
K1	16	#4	STR	3'-3"	35
S1	40	#4	4	10'-5"	278
S2	40	#4	5	3'-2"	85
S3	2	#4	4	10'-9"	14
S4	2	#4	5	3'-6"	5
S5	38	#4	5	6'-10"	173
S6	42	#4	5	8'-7"	241
V1	53	#4	STR	6'-4"	224
REINFORCING STEEL					3961 LBS.

CLASS A CONCRETE BREAKDOWN

POUR 1	FOOTING	17.1 C.Y.
POUR 2	CAP, LOWER PART OF WINGS	20.2 C.Y.
POUR 3	UPPER PART OF WINGS	2.4 C.Y.
TOTAL CLASS A CONCRETE		39.7 C.Y.

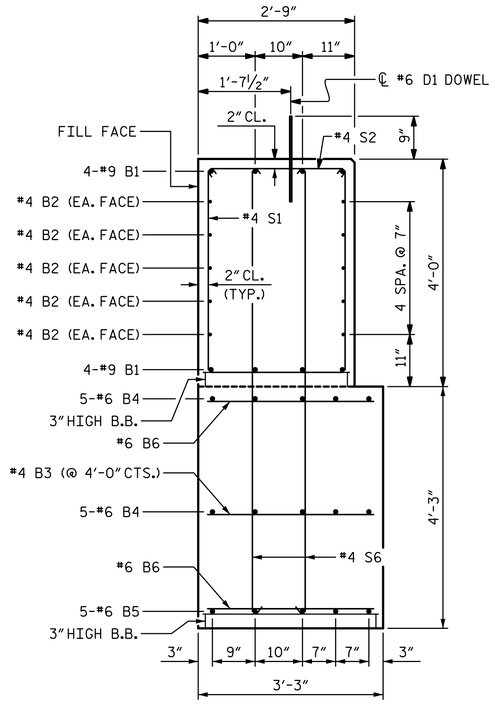

SECTION A-A

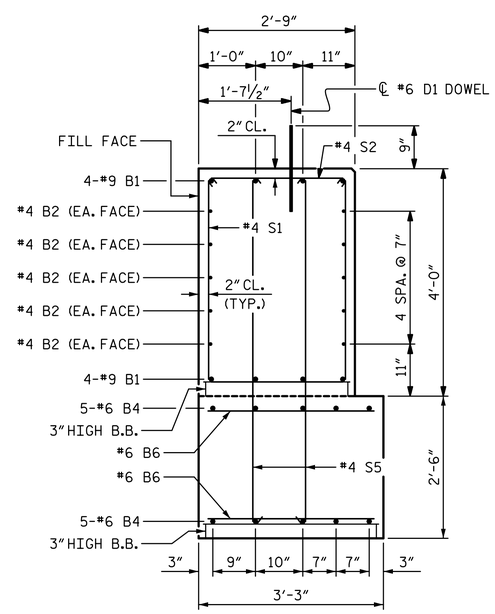

SECTION B-B

PROJECT NO. 17BP.7.R.30
ROCKINGHAM COUNTY
STATION: 15+41.00 -L-

SHEET 4 OF 5

STATE OF NORTH CAROLINA
DEPARTMENT OF TRANSPORTATION
RALEIGH

SUBSTRUCTURE

END BENT 1
DETAILS

PLANS PREPARED BY:
SIMPSON ENGINEERS & ASSOCIATES
5640 Dillard Drive
Suite 200
Cary, NC 27518
(919) 852-0468
(919) 852-0598 (Fax)
www.simpsonengr.com
LICENSURE NO. C-2521

NORTH CAROLINA PROFESSIONAL SEAL 11268 ENGINEER BETSY S. COX
4/19/2016

DOCUMENT NOT CONSIDERED FINAL UNLESS ALL SIGNATURES COMPLETED

REVISIONS							SHEET NO.
NO.	BY:	DATE:	NO.	BY:	DATE:		S-11
1			3				TOTAL SHEETS
2			4				15

DRAWN BY: T. BANKOVICH DATE: 4-16
CHECKED BY: B.S. COX DATE: 4-16
DESIGN ENGINEER OF RECORD: B.S. COX DATE: 4-16

4/18/2016 2:07:48 PM G:\Projects\2015\Rockingham 191 (17BP7R30)\Structures\Drawings\Final\401_17BP7R30_SMU_substructure.dgn

DocuSign Envelope ID: 61BBD2F3-877F-4B0C-A3C7-61BFA1FB2806

4/18/2016 2:07:48 PM G:\Projects\2015\Rockingham 191 (17BP7R30)\Structures\Drawings\Final\401_17BP7R30_SMU_substructure.dgn

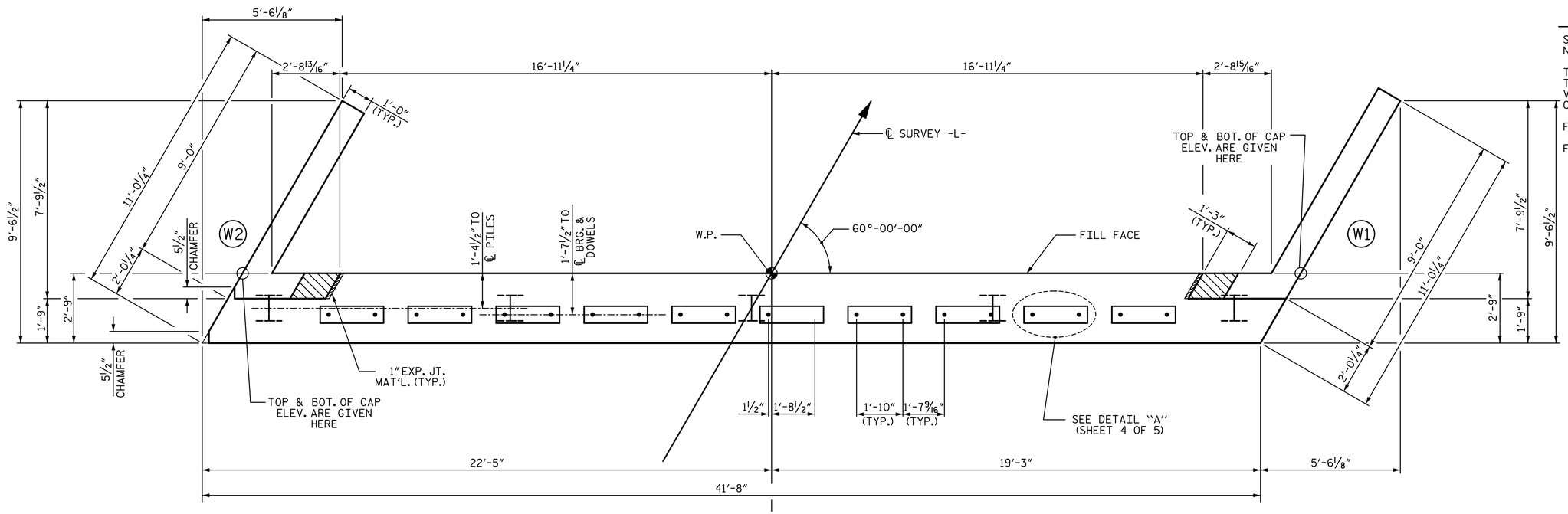

PLAN

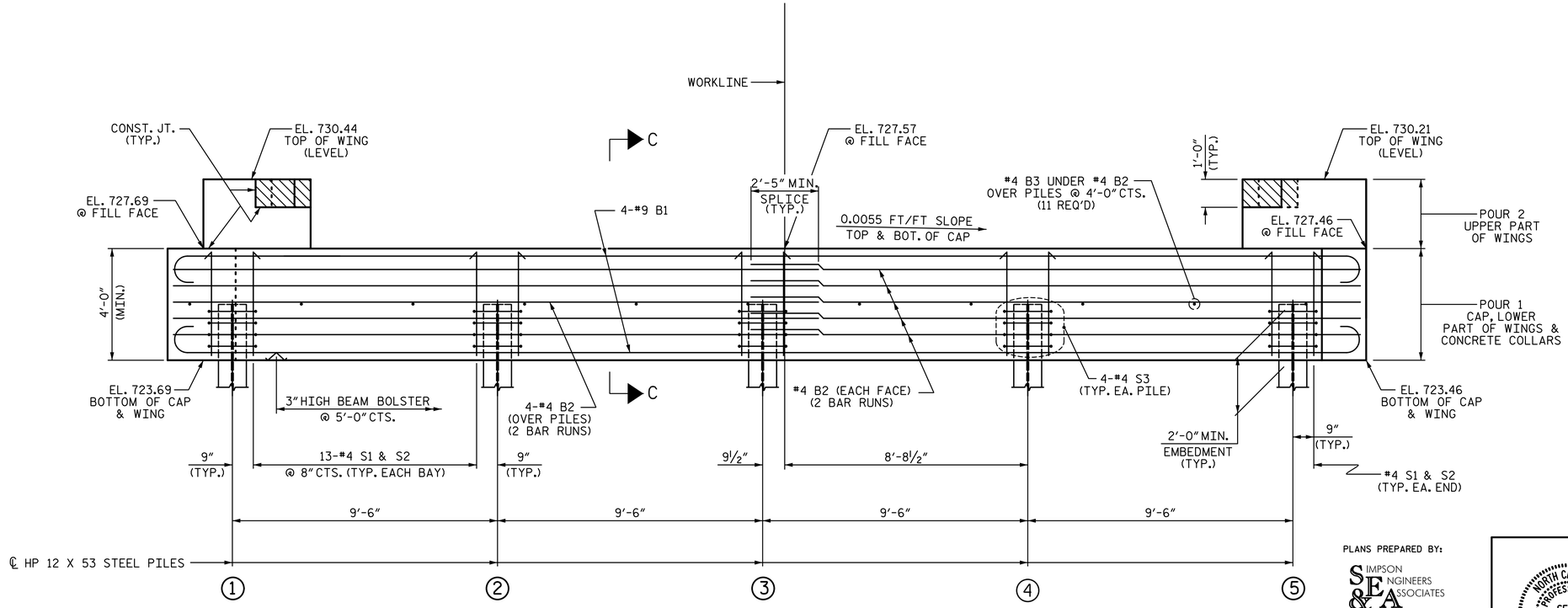

ELEVATION

WINGS NOT SHOWN FOR CLARITY.
FOR SECTION C-C, SEE SHEET 5 OF 5.
CONCRETE COLLARS FOR STEEL PILES NOT SHOWN IN PLAN AND ELEVATION VIEWS FOR CLARITY.
SEE "CORROSION PROTECTION FOR STEEL PILES DETAIL", SHEET 5 OF 5.

NOTES:

STIRRUPS IN CAP MAY BE SHIFTED AS NECESSARY TO CLEAR DOWELS.

THE CONCRETE IN THE SHADED AREA OF THE WING SHALL BE POURED AFTER THE VERTICAL CONCRETE BARRIER RAIL IS CAST IF SLIP FORMING IS USED.

FOR PILE SPLICE DETAILS, SEE SHEET 5 OF 5.

FOR WING DETAILS, SEE SHEET 3 OF 5.

TOP OF PILE ELEVATIONS	
1	725.68
2	725.63
3	725.57
4	725.52
5	725.47

PROJECT NO. 17BP.7.R.30
ROCKINGHAM COUNTY
STATION: 15+41.00 -L-

SHEET 2 OF 5

STATE OF NORTH CAROLINA
DEPARTMENT OF TRANSPORTATION
RALEIGH

SUBSTRUCTURE

END BENT 2

PLANS PREPARED BY:
SIMPSON ENGINEERS & ASSOCIATES
5640 Dillard Drive
Suite 200
Cary, NC 27518
(919) 852-0468
(919) 852-0598 (Fax)
www.slmpsonengr.com
LICENSURE NO. C-2521

NORTH CAROLINA PROFESSIONAL SEAL 11268 ENGINEER BETSY S. COX
Documents by: Betsy S. Cox
803D7D5B9D994EF...
4/19/2016

DOCUMENT NOT CONSIDERED FINAL UNLESS ALL SIGNATURES COMPLETED

REVISIONS							SHEET NO.
NO.	BY:	DATE:	NO.	BY:	DATE:		S-9
1			3				TOTAL SHEETS
2			4				15

DRAWN BY:	T. BANKOVICH	DATE:	4-16
CHECKED BY:	B.S. COX	DATE:	4-16
DESIGN ENGINEER OF RECORD:	B.S. COX	DATE:	4-16

DocuSign Envelope ID: 61BBD2F3-877F-4B0C-A3C7-61BFA1FB2806

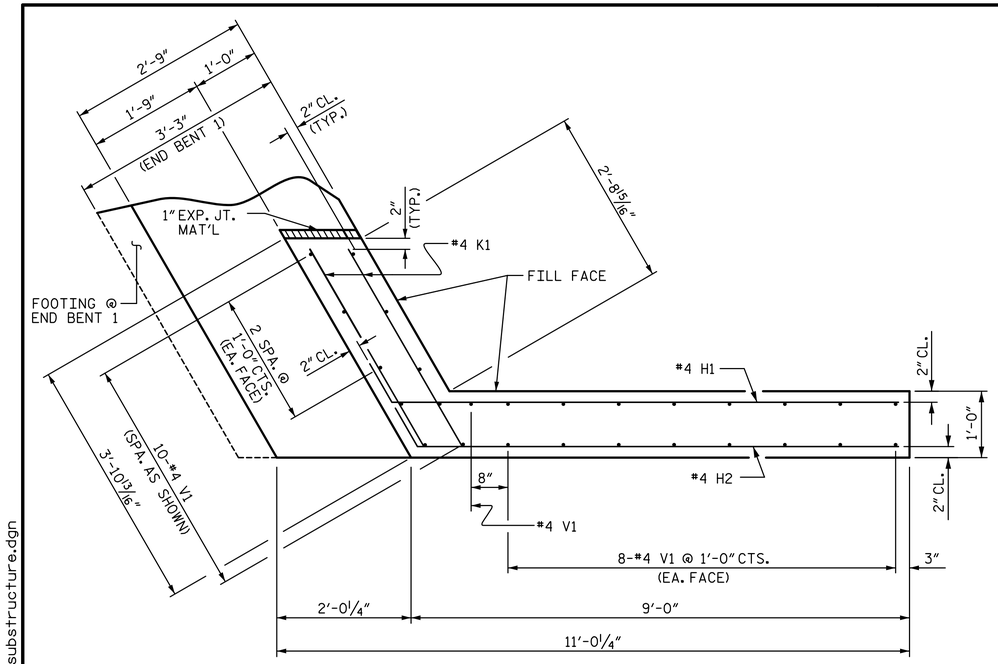

PLAN OF WING (W1)

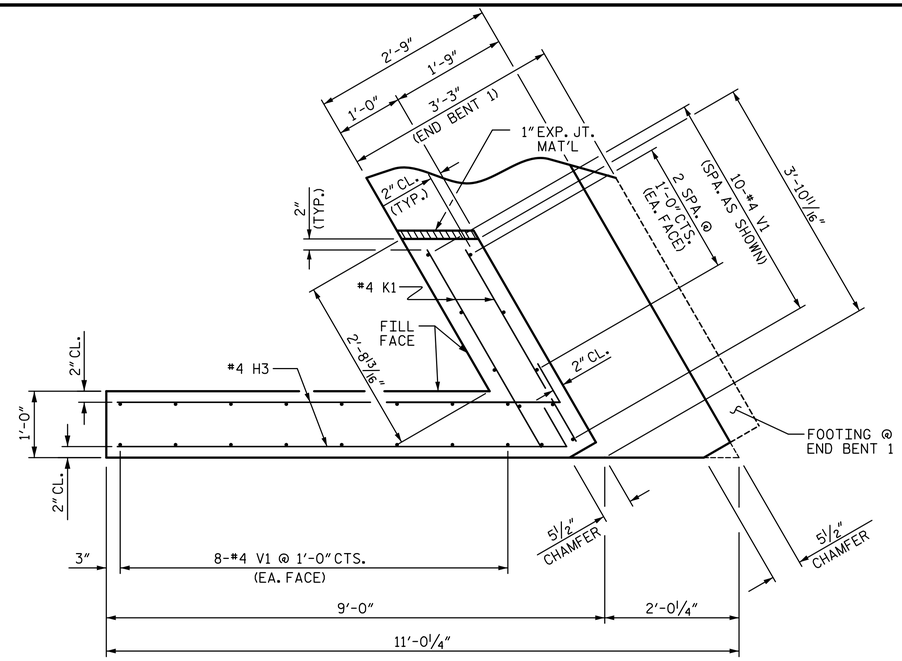

PLAN OF WING (W2)

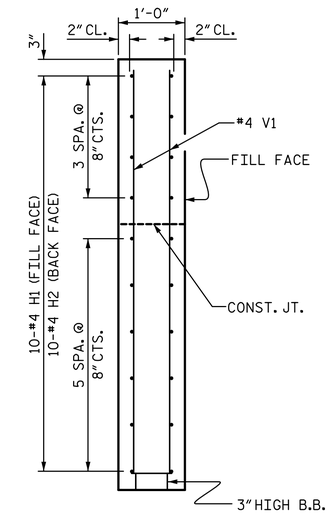

SECTION X-X

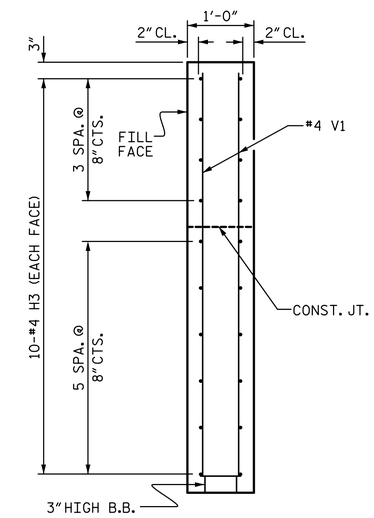

SECTION Y-Y

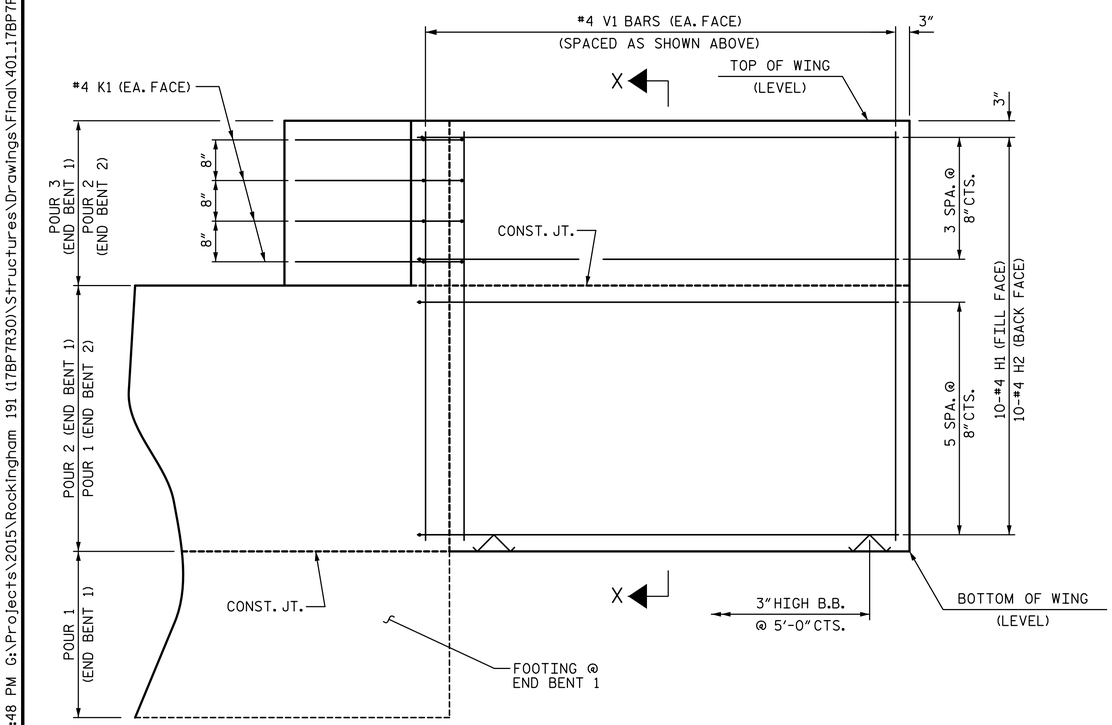

ELEVATION OF WING (W1)

FOOTING @ END BENT 1 ONLY
(SEE SHEET 1 OF 5)

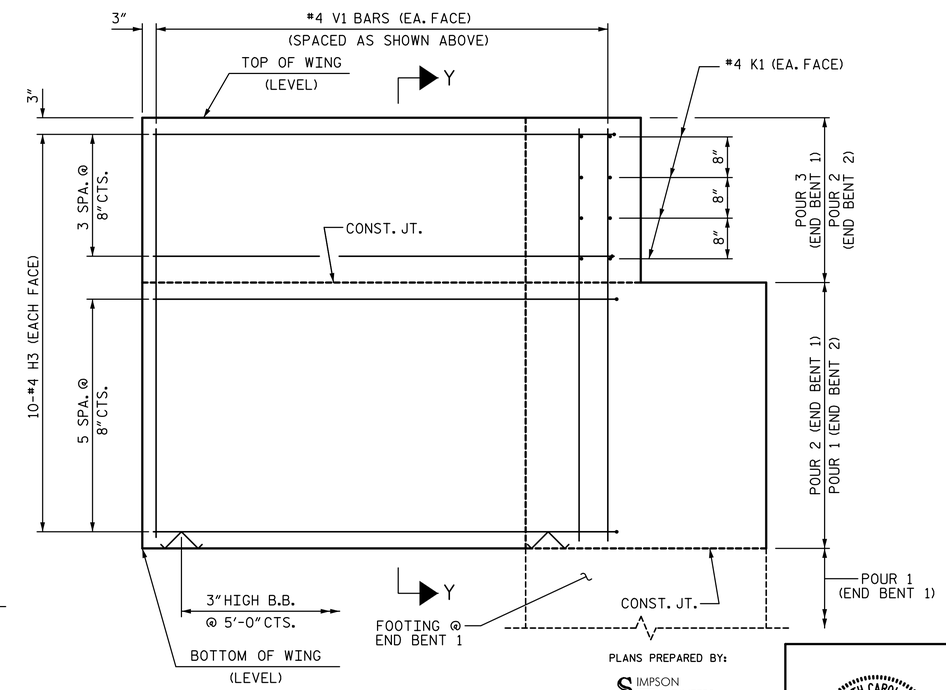

ELEVATION OF WING (W2)

FOOTING @ END BENT 1 ONLY
(SEE SHEET 1 OF 5)

WING DETAILS

PROJECT NO. 17BP.7.R.30
ROCKINGHAM COUNTY
STATION: 15+41.00 -L-

SHEET 3 OF 5

STATE OF NORTH CAROLINA
DEPARTMENT OF TRANSPORTATION
RALEIGH
SUBSTRUCTURE

END BENT
WING DETAILS

PLANS PREPARED BY:
SIMPSON ENGINEERS & ASSOCIATES
5640 Dillard Drive
Suite 200
Cary, NC 27518
(919) 852-0468
(919) 852-0598 (Fax)
www.slmpsonengr.com
LICENSURE NO. C-2521

NORTH CAROLINA PROFESSIONAL SEAL 11268 ENGINEER BETSY S. COX
Betsy S. Cox
4/19/2016

DOCUMENT NOT CONSIDERED FINAL UNLESS ALL SIGNATURES COMPLETED

DRAWN BY:	T. BANKOVICH	DATE:	4-16
CHECKED BY:	B.S. COX	DATE:	4-16
DESIGN ENGINEER OF RECORD:	B.S. COX	DATE:	4-16

REVISIONS						SHEET NO.
NO.	BY:	DATE:	NO.	BY:	DATE:	S-10
1			3			TOTAL SHEETS
2			4			15

4/18/2016 2:07:48 PM G:\Projects\2015\Rockingham 191 (17BP7R30)\Structures\Drawings\Final\401_17BP7R30_SMU_substructure.dgn

DocuSign Envelope ID: 61BBD2F3-877F-4B0C-A3C7-61BFA1FB2806

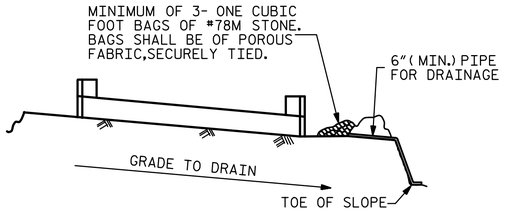

BAGGED STONE AND PIPE SHALL BE PLACED IMMEDIATELY AFTER COMPLETION OF END BENT EXCAVATION. PIPE MAY BE EITHER CONCRETE, CORRUGATED STEEL, CORRUGATED ALUMINUM ALLOY, OR CORRUGATED PLASTIC. PERFORATED PIPE WILL NOT BE ALLOWED.

BAGGED STONE SHALL REMAIN IN PLACE UNTIL THE ENGINEER DIRECTS THAT IT BE REMOVED. THE CONTRACTOR SHALL REMOVE AND DISPOSE OF SILT ACCUMULATIONS AT BAGGED STONE WHEN SO DIRECTED BY THE ENGINEER. BAGS SHALL BE REMOVED AND REPLACED WHENEVER THE ENGINEER DETERMINES THAT THEY HAVE DETERIORATED AND LOST THEIR EFFECTIVENESS.

NO SEPARATE PAYMENT WILL BE MADE FOR THIS WORK AND THE ENTIRE COST OF THIS WORK SHALL BE INCLUDED IN THE UNIT CONTRACT PRICE BID FOR THE SEVERAL PAY ITEMS.

TEMPORARY DRAINAGE AT END BENT

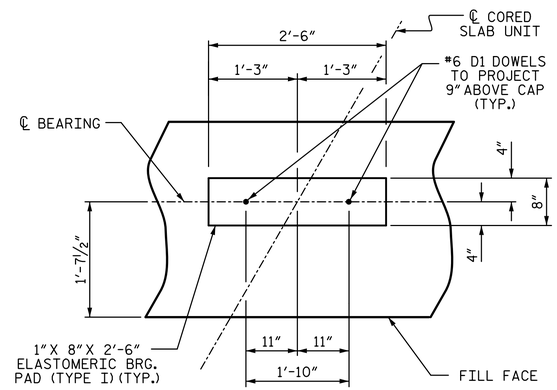

DETAIL "A"

(END BENT 1 SHOWN, END BENT 2 SIMILAR BY ROTATION)
(END BENT 1 FOOTING NOT SHOWN)

BAR TYPES

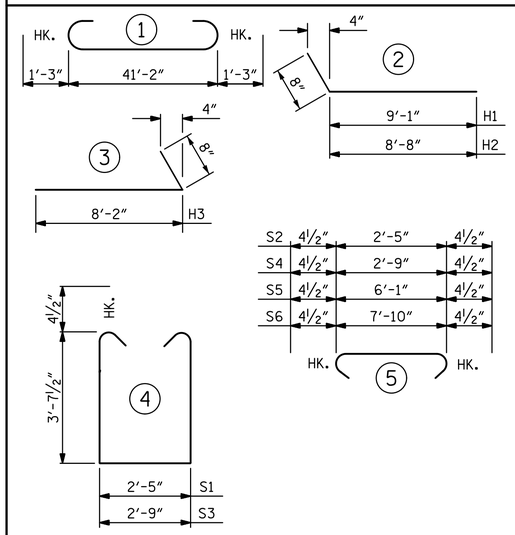

ALL BAR DIMENSIONS ARE OUT TO OUT.

BILL OF MATERIAL

END BENT 1

BAR	NO.	SIZE	TYPE	LENGTH	WEIGHT
B1	8	#9	1	43'-8"	1188
B2	20	#4	STR	21'-11"	293
B3	5	#4	STR	2'-11"	10
B4	10	#6	STR	41'-4"	621
B5	5	#6	STR	20'-6"	154
B6	80	#6	STR	2'-11"	350
D1	20	#6	STR	1'-6"	45
H1	10	#4	2	9'-9"	65
H2	10	#4	2	9'-4"	62
H3	20	#4	3	8'-10"	118
K1	16	#4	STR	3'-3"	35
S1	40	#4	4	10'-5"	278
S2	40	#4	5	3'-2"	85
S3	2	#4	4	10'-9"	14
S4	2	#4	5	3'-6"	5
S5	38	#4	5	6'-10"	173
S6	42	#4	5	8'-7"	241
V1	53	#4	STR	6'-4"	224
REINFORCING STEEL					3961 LBS.

CLASS A CONCRETE BREAKDOWN

POUR 1	FOOTING	17.1 C.Y.
POUR 2	CAP, LOWER PART OF WINGS	20.2 C.Y.
POUR 3	UPPER PART OF WINGS	2.4 C.Y.
TOTAL CLASS A CONCRETE		39.7 C.Y.

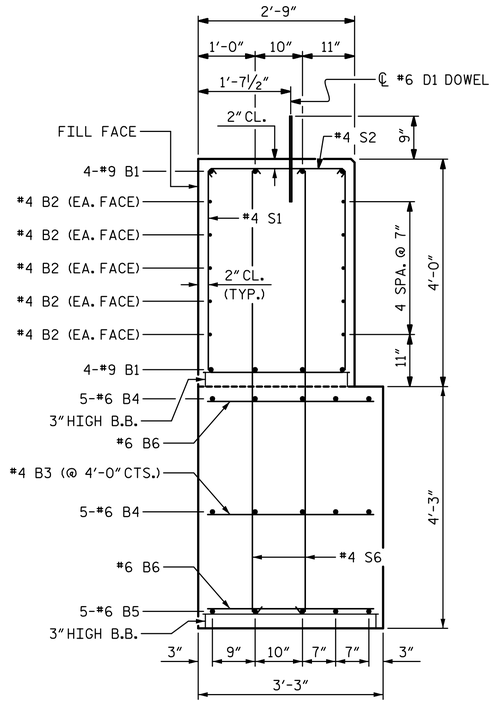

SECTION A-A

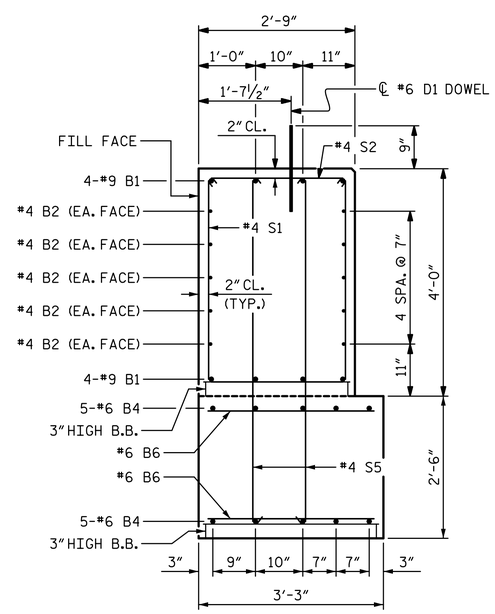

SECTION B-B

PROJECT NO. 17BP.7.R.30
ROCKINGHAM COUNTY
STATION: 15+41.00 -L-

SHEET 4 OF 5

STATE OF NORTH CAROLINA
DEPARTMENT OF TRANSPORTATION
RALEIGH

SUBSTRUCTURE

END BENT 1
DETAILS

PLANS PREPARED BY:
SIMPSON ENGINEERS & ASSOCIATES
5640 Dillard Drive
Suite 200
Cary, NC 27518
(919) 852-0468
(919) 852-0598 (Fax)
www.simpsonengr.com
LICENSURE NO. C-2521

NORTH CAROLINA PROFESSIONAL SEAL 11268 ENGINEER BETSY S. COX
4/19/2016

DOCUMENT NOT CONSIDERED FINAL UNLESS ALL SIGNATURES COMPLETED

REVISIONS							SHEET NO.
NO.	BY:	DATE:	NO.	BY:	DATE:		S-11
1			3				TOTAL SHEETS
2			4				15

DRAWN BY: T. BANKOVICH DATE: 4-16
CHECKED BY: B.S. COX DATE: 4-16
DESIGN ENGINEER OF RECORD: B.S. COX DATE: 4-16

4/18/2016 2:07:48 PM G:\Projects\2015\Rockingham 191 (17BP7R30)\Structures\Drawings\Final\401_17BP7R30_SMU_substructure.dgn

DocuSign Envelope ID: 61BBD2F3-877F-4B0C-A3C7-61BFA1FB2806

4/18/2016 2:07:48 PM G:\Projects\2015\Rockingham 191 (17BP7R30)\Structures\Drawings\Final\401_17BP7R30_SMU_substructure.dgn

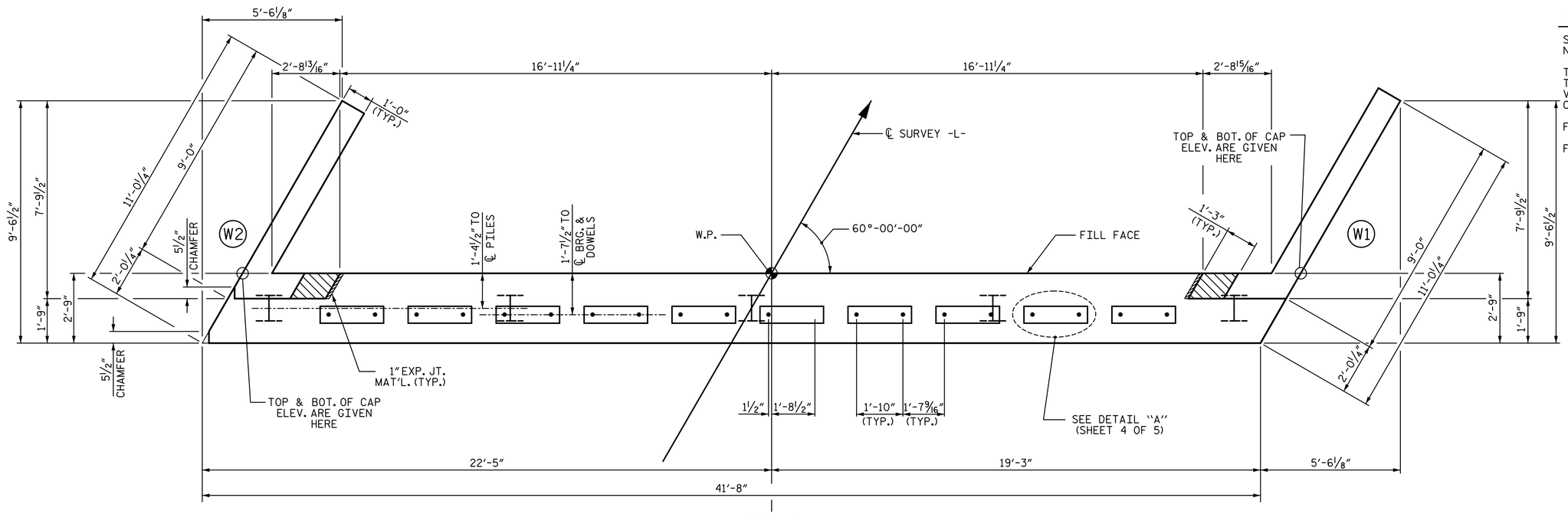

PLAN

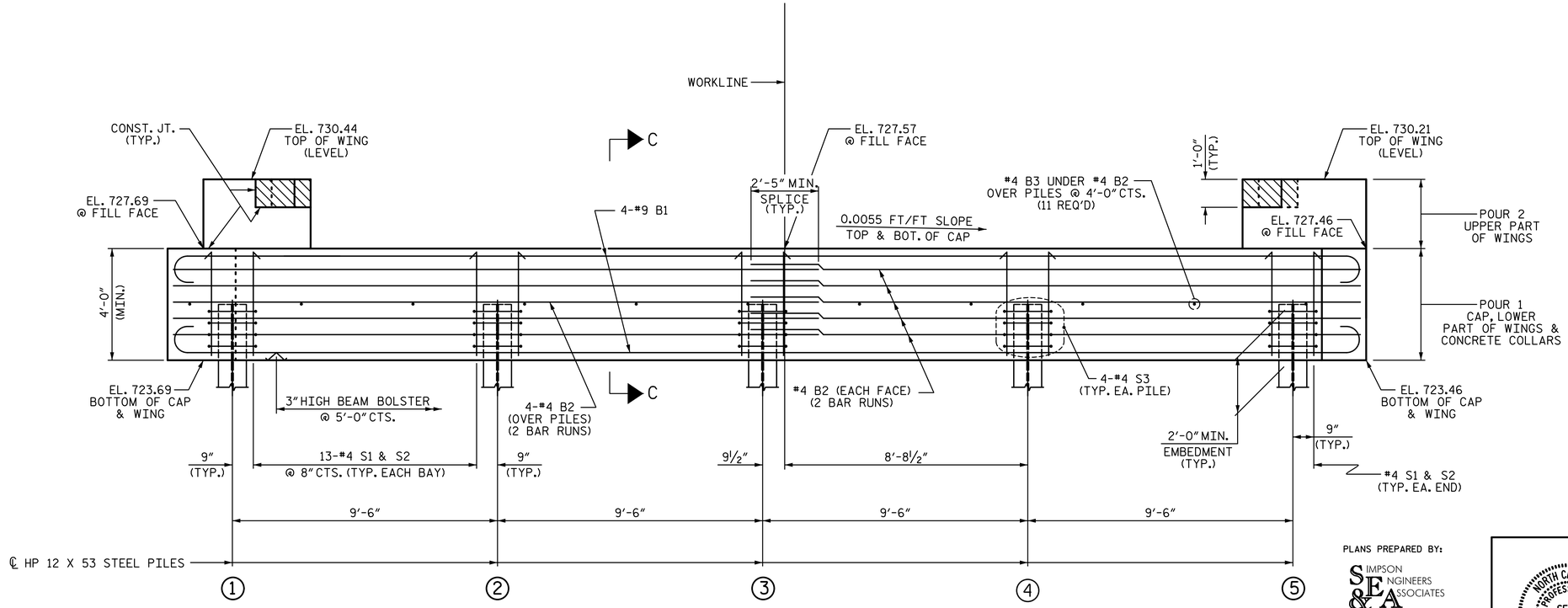

ELEVATION

WINGS NOT SHOWN FOR CLARITY.
FOR SECTION C-C, SEE SHEET 5 OF 5.
CONCRETE COLLARS FOR STEEL PILES NOT SHOWN IN PLAN AND ELEVATION VIEWS FOR CLARITY.
SEE "CORROSION PROTECTION FOR STEEL PILES DETAIL", SHEET 5 OF 5.

NOTES:

STIRRUPS IN CAP MAY BE SHIFTED AS NECESSARY TO CLEAR DOWELS.

THE CONCRETE IN THE SHADED AREA OF THE WING SHALL BE POURED AFTER THE VERTICAL CONCRETE BARRIER RAIL IS CAST IF SLIP FORMING IS USED.

FOR PILE SPLICE DETAILS, SEE SHEET 5 OF 5.

FOR WING DETAILS, SEE SHEET 3 OF 5.

TOP OF PILE ELEVATIONS	
1	725.68
2	725.63
3	725.57
4	725.52
5	725.47

PROJECT NO. 17BP.7.R.30
ROCKINGHAM COUNTY
STATION: 15+41.00 -L-

SHEET 2 OF 5

STATE OF NORTH CAROLINA
DEPARTMENT OF TRANSPORTATION
RALEIGH

SUBSTRUCTURE

END BENT 2

PLANS PREPARED BY:
SIMPSON ENGINEERS & ASSOCIATES
5640 Dillard Drive
Suite 200
Cary, NC 27518
(919) 852-0468
(919) 852-0598 (Fax)
www.slmpsonengr.com
LICENSURE NO. C-2521

NORTH CAROLINA PROFESSIONAL SEAL 11268 ENGINEER BETSY S. COX
Documents by: Betsy S. Cox
803D7D5B9D994EF...
4/19/2016

DOCUMENT NOT CONSIDERED FINAL UNLESS ALL SIGNATURES COMPLETED

REVISIONS							SHEET NO.
NO.	BY:	DATE:	NO.	BY:	DATE:		S-9
1			3				TOTAL SHEETS
2			4				15

DRAWN BY:	T. BANKOVICH	DATE:	4-16
CHECKED BY:	B.S. COX	DATE:	4-16
DESIGN ENGINEER OF RECORD:	B.S. COX	DATE:	4-16

DocuSign Envelope ID: 61BBD2F3-877F-4B0C-A3C7-61BFA1FB2806

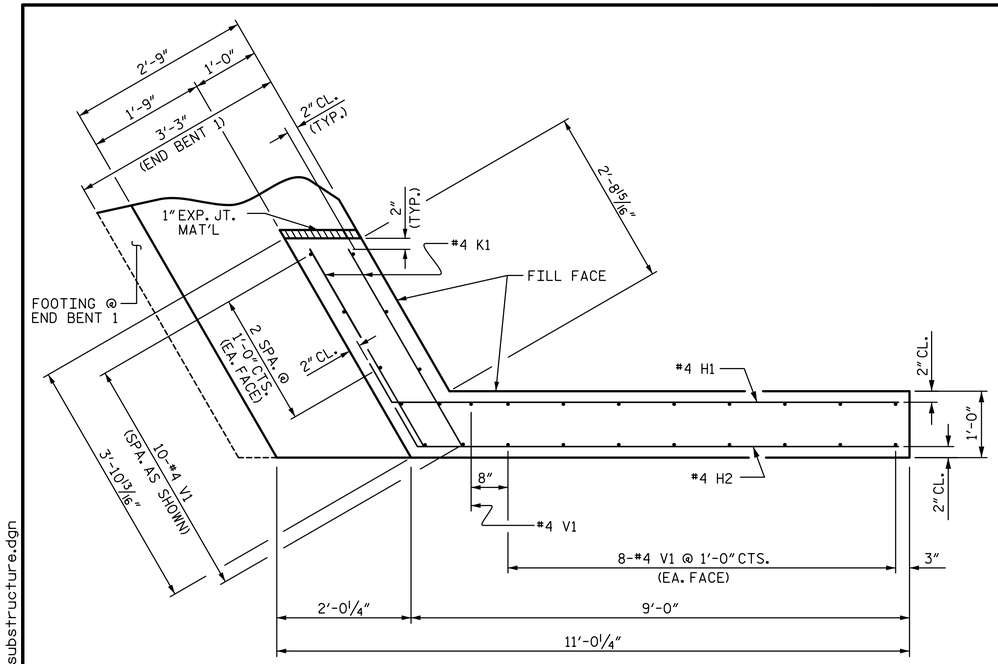

PLAN OF WING (W1)

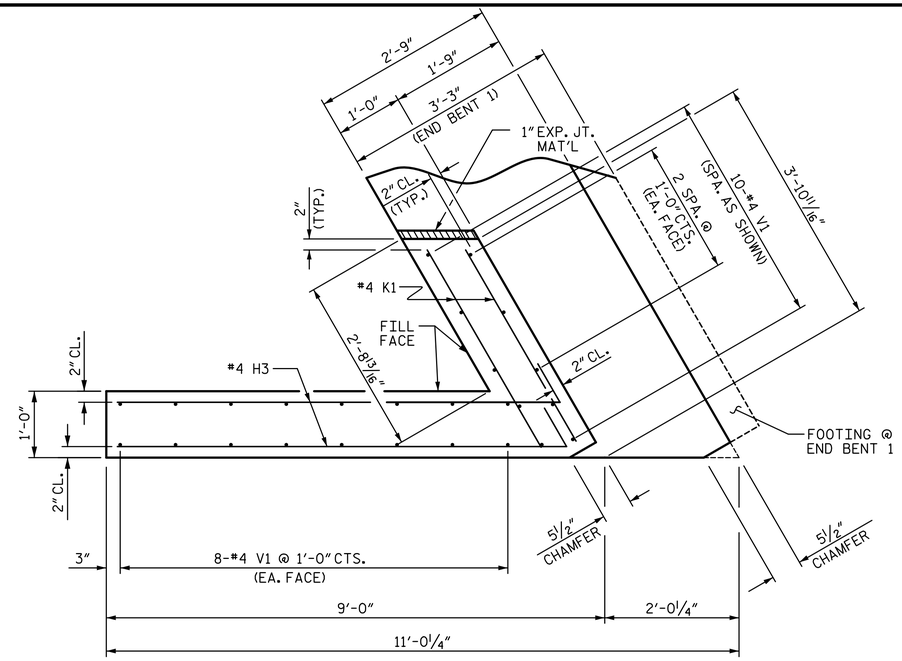

PLAN OF WING (W2)

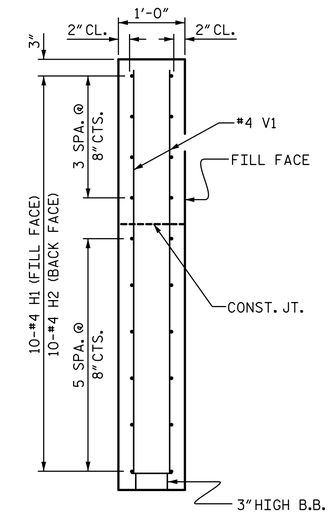

SECTION X-X

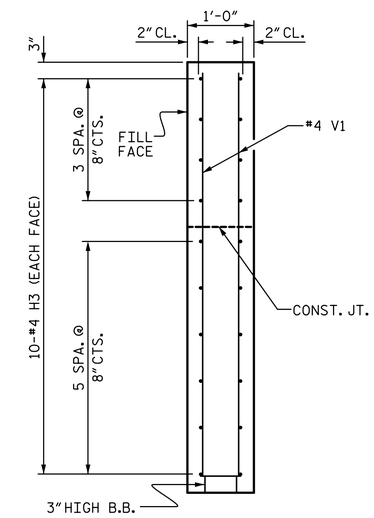

SECTION Y-Y

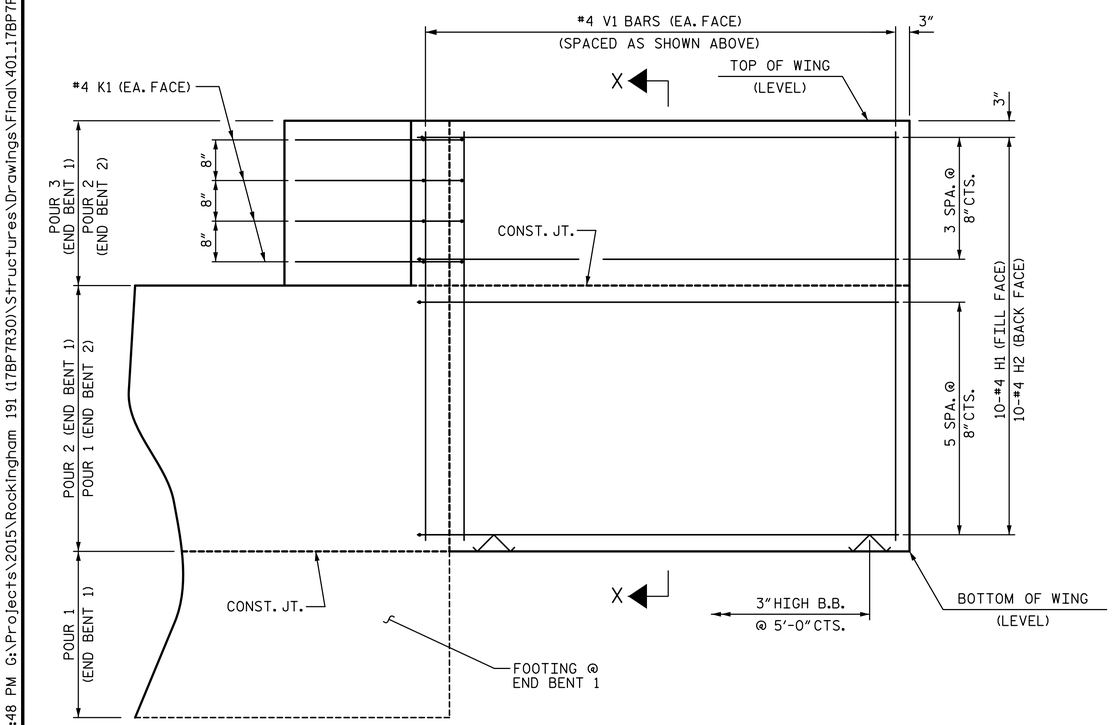

ELEVATION OF WING (W1)

FOOTING @ END BENT 1 ONLY
(SEE SHEET 1 OF 5)

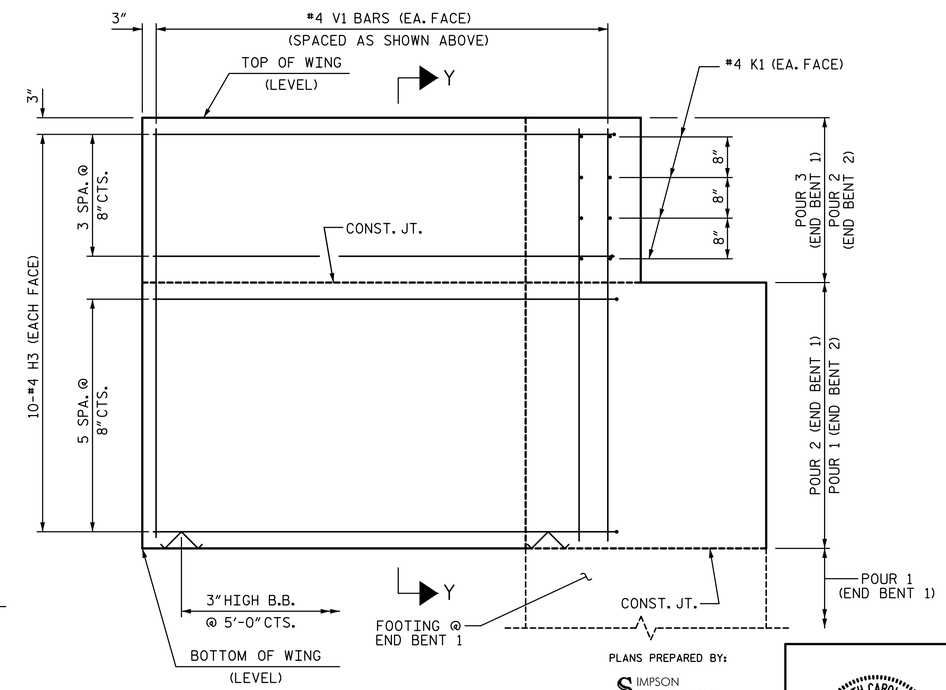

ELEVATION OF WING (W2)

FOOTING @ END BENT 1 ONLY
(SEE SHEET 1 OF 5)

WING DETAILS

PROJECT NO. 17BP.7.R.30
ROCKINGHAM COUNTY
STATION: 15+41.00 -L-

SHEET 3 OF 5

STATE OF NORTH CAROLINA
DEPARTMENT OF TRANSPORTATION
RALEIGH
SUBSTRUCTURE

END BENT
WING DETAILS

PLANS PREPARED BY:
SIMPSON ENGINEERS & ASSOCIATES
5640 Dillard Drive
Suite 200
Cary, NC 27518
(919) 852-0468
(919) 852-0598 (Fax)
www.slmpsonengr.com
LICENSURE NO. C-2521

NORTH CAROLINA PROFESSIONAL SEAL 11268 ENGINEER BETSY S. COX
Betsy S. Cox
4/19/2016

DOCUMENT NOT CONSIDERED FINAL UNLESS ALL SIGNATURES COMPLETED

DRAWN BY:	T. BANKOVICH	DATE:	4-16
CHECKED BY:	B.S. COX	DATE:	4-16
DESIGN ENGINEER OF RECORD:	B.S. COX	DATE:	4-16

REVISIONS						SHEET NO.
NO.	BY:	DATE:	NO.	BY:	DATE:	S-10
1			3			TOTAL SHEETS
2			4			15

4/18/2016 2:07:48 PM G:\Projects\2015\Rockingham 191 (17BP7R30)\Structures\Drawings\Final\401_17BP7R30_SMU_substructure.dgn

DocuSign Envelope ID: 61BBD2F3-877F-4B0C-A3C7-61BFA1FB2806

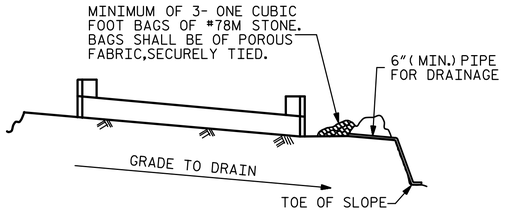

BAGGED STONE AND PIPE SHALL BE PLACED IMMEDIATELY AFTER COMPLETION OF END BENT EXCAVATION. PIPE MAY BE EITHER CONCRETE, CORRUGATED STEEL, CORRUGATED ALUMINUM ALLOY, OR CORRUGATED PLASTIC. PERFORATED PIPE WILL NOT BE ALLOWED.

BAGGED STONE SHALL REMAIN IN PLACE UNTIL THE ENGINEER DIRECTS THAT IT BE REMOVED. THE CONTRACTOR SHALL REMOVE AND DISPOSE OF SILT ACCUMULATIONS AT BAGGED STONE WHEN SO DIRECTED BY THE ENGINEER. BAGS SHALL BE REMOVED AND REPLACED WHENEVER THE ENGINEER DETERMINES THAT THEY HAVE DETERIORATED AND LOST THEIR EFFECTIVENESS.

NO SEPARATE PAYMENT WILL BE MADE FOR THIS WORK AND THE ENTIRE COST OF THIS WORK SHALL BE INCLUDED IN THE UNIT CONTRACT PRICE BID FOR THE SEVERAL PAY ITEMS.

TEMPORARY DRAINAGE AT END BENT

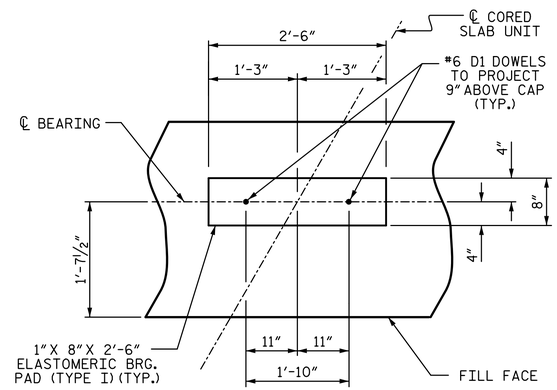

DETAIL "A"

(END BENT 1 SHOWN, END BENT 2 SIMILAR BY ROTATION)
(END BENT 1 FOOTING NOT SHOWN)

BAR TYPES

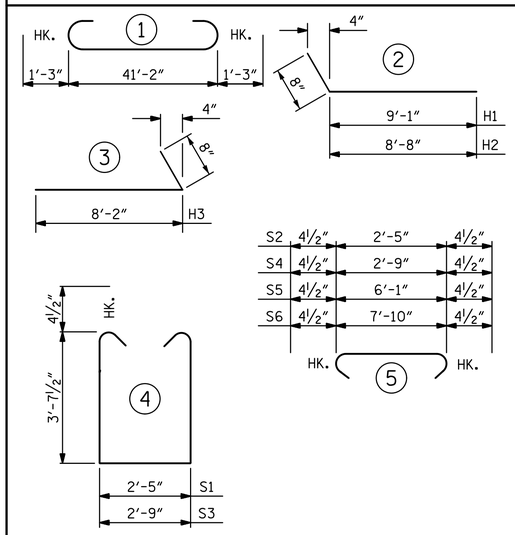

ALL BAR DIMENSIONS ARE OUT TO OUT.

BILL OF MATERIAL

END BENT 1

BAR	NO.	SIZE	TYPE	LENGTH	WEIGHT
B1	8	#9	1	43'-8"	1188
B2	20	#4	STR	21'-11"	293
B3	5	#4	STR	2'-11"	10
B4	10	#6	STR	41'-4"	621
B5	5	#6	STR	20'-6"	154
B6	80	#6	STR	2'-11"	350
D1	20	#6	STR	1'-6"	45
H1	10	#4	2	9'-9"	65
H2	10	#4	2	9'-4"	62
H3	20	#4	3	8'-10"	118
K1	16	#4	STR	3'-3"	35
S1	40	#4	4	10'-5"	278
S2	40	#4	5	3'-2"	85
S3	2	#4	4	10'-9"	14
S4	2	#4	5	3'-6"	5
S5	38	#4	5	6'-10"	173
S6	42	#4	5	8'-7"	241
V1	53	#4	STR	6'-4"	224
REINFORCING STEEL					3961 LBS.

CLASS A CONCRETE BREAKDOWN

POUR 1	FOOTING	17.1 C.Y.
POUR 2	CAP, LOWER PART OF WINGS	20.2 C.Y.
POUR 3	UPPER PART OF WINGS	2.4 C.Y.
TOTAL CLASS A CONCRETE		39.7 C.Y.

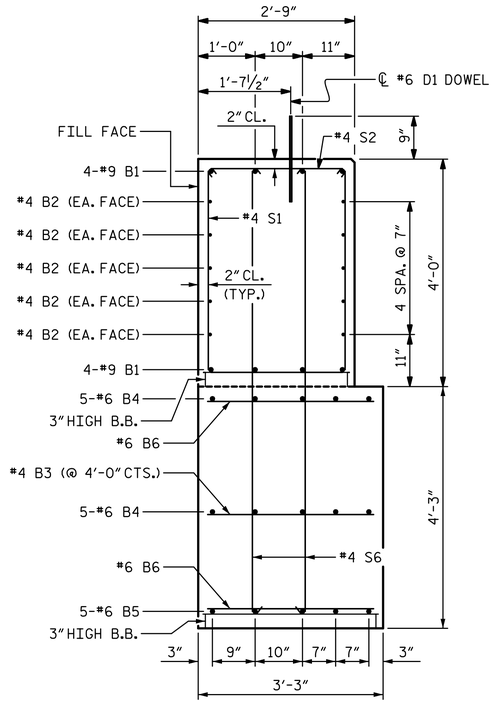

SECTION A-A

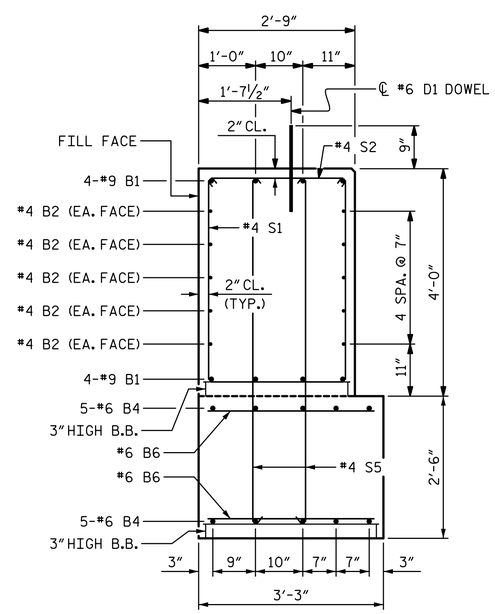

SECTION B-B

PROJECT NO. 17BP.7.R.30
ROCKINGHAM COUNTY
STATION: 15+41.00 -L-

SHEET 4 OF 5

STATE OF NORTH CAROLINA
DEPARTMENT OF TRANSPORTATION
RALEIGH

SUBSTRUCTURE

END BENT 1
DETAILS

PLANS PREPARED BY:
SIMPSON ENGINEERS & ASSOCIATES
5640 Dillard Drive
Suite 200
Cary, NC 27518
(919) 852-0468
(919) 852-0598 (Fax)
www.simpsonengr.com
LICENSURE NO. C-2521

NORTH CAROLINA PROFESSIONAL SEAL 11268 ENGINEER BETSY S. COX
4/19/2016

DOCUMENT NOT CONSIDERED FINAL UNLESS ALL SIGNATURES COMPLETED

REVISIONS							SHEET NO.
NO.	BY:	DATE:	NO.	BY:	DATE:		S-11
1			3				TOTAL SHEETS
2			4				15

DRAWN BY: T. BANKOVICH DATE: 4-16
CHECKED BY: B.S. COX DATE: 4-16
DESIGN ENGINEER OF RECORD: B.S. COX DATE: 4-16

4/18/2016 2:07:48 PM G:\Projects\2015\Rockingham 191 (17BP7R30)\Structures\Drawings\Final\401_17BP7R30_SMU_substructure.dgn

DocuSign Envelope ID: 61BBD2F3-877F-4B0C-A3C7-61BFA1FB2806

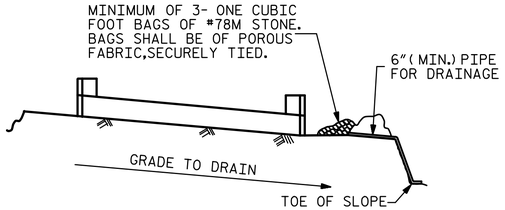

BAGGED STONE AND PIPE SHALL BE PLACED IMMEDIATELY AFTER COMPLETION OF END BENT EXCAVATION. PIPE MAY BE EITHER CONCRETE, CORRUGATED STEEL, CORRUGATED ALUMINUM ALLOY, OR CORRUGATED PLASTIC. PERFORATED PIPE WILL NOT BE ALLOWED.

BAGGED STONE SHALL REMAIN IN PLACE UNTIL THE ENGINEER DIRECTS THAT IT BE REMOVED. THE CONTRACTOR SHALL REMOVE AND DISPOSE OF SILT ACCUMULATIONS AT BAGGED STONE WHEN SO DIRECTED BY THE ENGINEER. BAGS SHALL BE REMOVED AND REPLACED WHENEVER THE ENGINEER DETERMINES THAT THEY HAVE DETERIORATED AND LOST THEIR EFFECTIVENESS.

NO SEPARATE PAYMENT WILL BE MADE FOR THIS WORK AND THE ENTIRE COST OF THIS WORK SHALL BE INCLUDED IN THE UNIT CONTRACT PRICE BID FOR THE SEVERAL PAY ITEMS.

TEMPORARY DRAINAGE AT END BENT

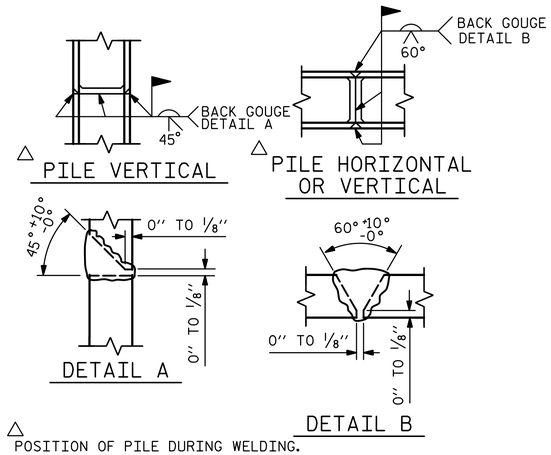

△ POSITION OF PILE DURING WELDING.

PILE SPLICE DETAILS

BAR TYPES

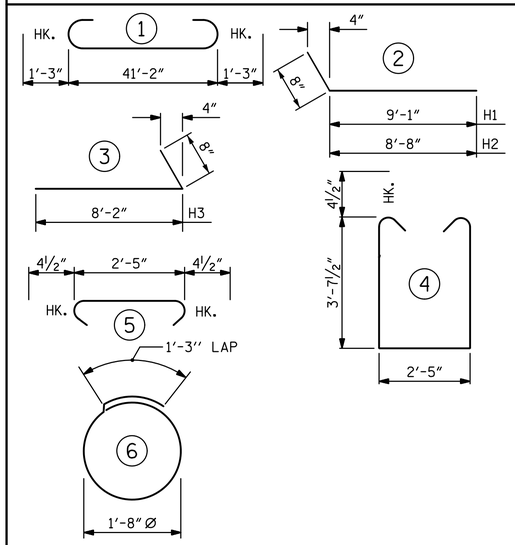

ALL BAR DIMENSIONS ARE OUT TO OUT.

BILL OF MATERIAL

END BENT 2

BAR	NO.	SIZE	TYPE	LENGTH	WEIGHT
B1	8	#9	1	43'-8"	1188
B2	28	#4	STR	21'-11"	410
B3	11	#4	STR	2'-5"	18
D1	20	#6	STR	1'-6"	45
H1	10	#4	2	9'-9"	65
H2	10	#4	2	9'-4"	62
H3	20	#4	3	8'-10"	118
K1	16	#4	STR	3'-3"	35
S1	54	#4	4	10'-5"	376
S2	54	#4	5	3'-2"	114
S3	20	#4	6	6'-6"	87
V1	53	#4	STR	6'-4"	224
REINFORCING STEEL					2742 LBS.

CLASS A CONCRETE BREAKDOWN

POUR 1	CAP, LOWER PART OF WINGS & COLLARS	20.2 C.Y.
POUR 2	UPPER PART OF WINGS	2.4 C.Y.
TOTAL CLASS A CONCRETE		22.6 C.Y.

HP 12 X 53 STEEL PILES

NO: 5 LIN. FT.= 50

PILE EXCAVATION IN SOIL LIN. FT.= 30

PILE EXCAVATION NOT IN SOIL LIN. FT.= 20

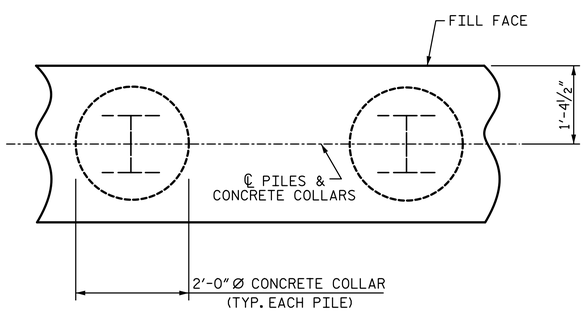

PLAN

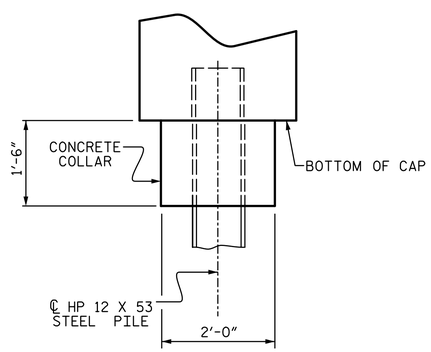

ELEVATION

CORROSION PROTECTION FOR STEEL PILES DETAIL

(END BENT 2)

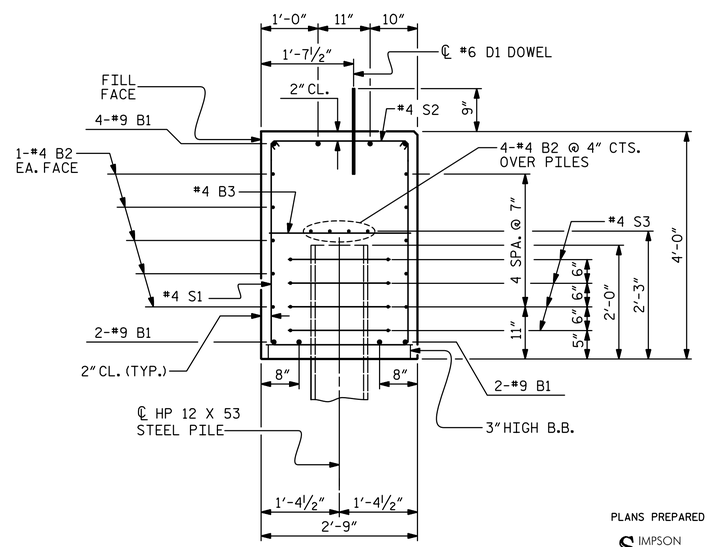

SECTION C-C

(CONCRETE COLLAR NOT SHOWN FOR CLARITY. SEE "CORROSION PROTECTION FOR STEEL PILES DETAIL.")

PROJECT NO. 17BP.7.R.30

ROCKINGHAM COUNTY

STATION: 15+41.00 -L-

SHEET 5 OF 5

STATE OF NORTH CAROLINA
DEPARTMENT OF TRANSPORTATION
RALEIGH

SUBSTRUCTURE

END BENT 2 DETAILS

PLANS PREPARED BY:

SIMPSON ENGINEERS & ASSOCIATES
5640 Dillard Drive
Suite 200
Cary, NC 27518
(919) 852-0468
(919) 852-0598 (Fax)
www.simpsonengr.com

LICENSURE NO. C-2521

NORTH CAROLINA PROFESSIONAL SEAL 11268 ENGINEER BARRY S. COX

Docusigned by: Barry S. Cox
803D7D5B0D994AE
4/19/2016

DOCUMENT NOT CONSIDERED FINAL UNLESS ALL SIGNATURES COMPLETED

REVISIONS							SHEET NO.
NO.	BY:	DATE:	NO.	BY:	DATE:		S-12
1			3				TOTAL SHEETS
2			4				15

DRAWN BY: T. BANKOVICH DATE: 4-16
CHECKED BY: B.S. COX DATE: 4-16
DESIGN ENGINEER OF RECORD: B.S. COX DATE: 4-16

4/18/2016 2:07:48 PM G:\Projects\2015\Rockingham 191 (17BP7R30)\Structures\Drawings\Final\401_17BP7R30_SMU_substructure.dgn

DocuSign Envelope ID: 61BBD2F3-877F-4B0C-A3C7-61BFA1FB2806

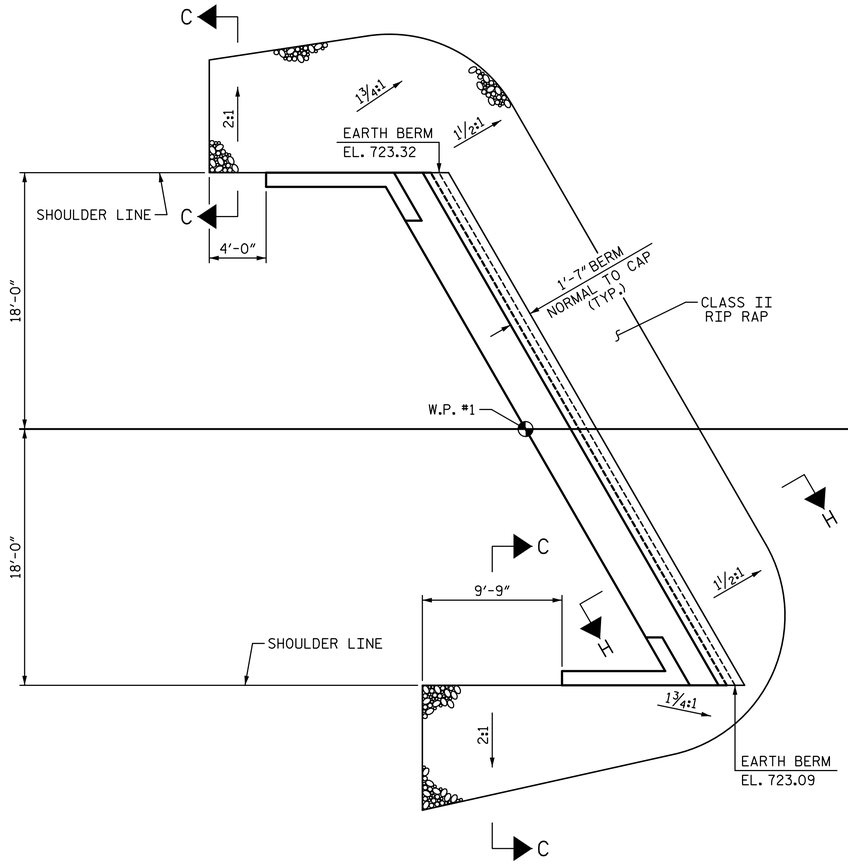

@ END BENT 1

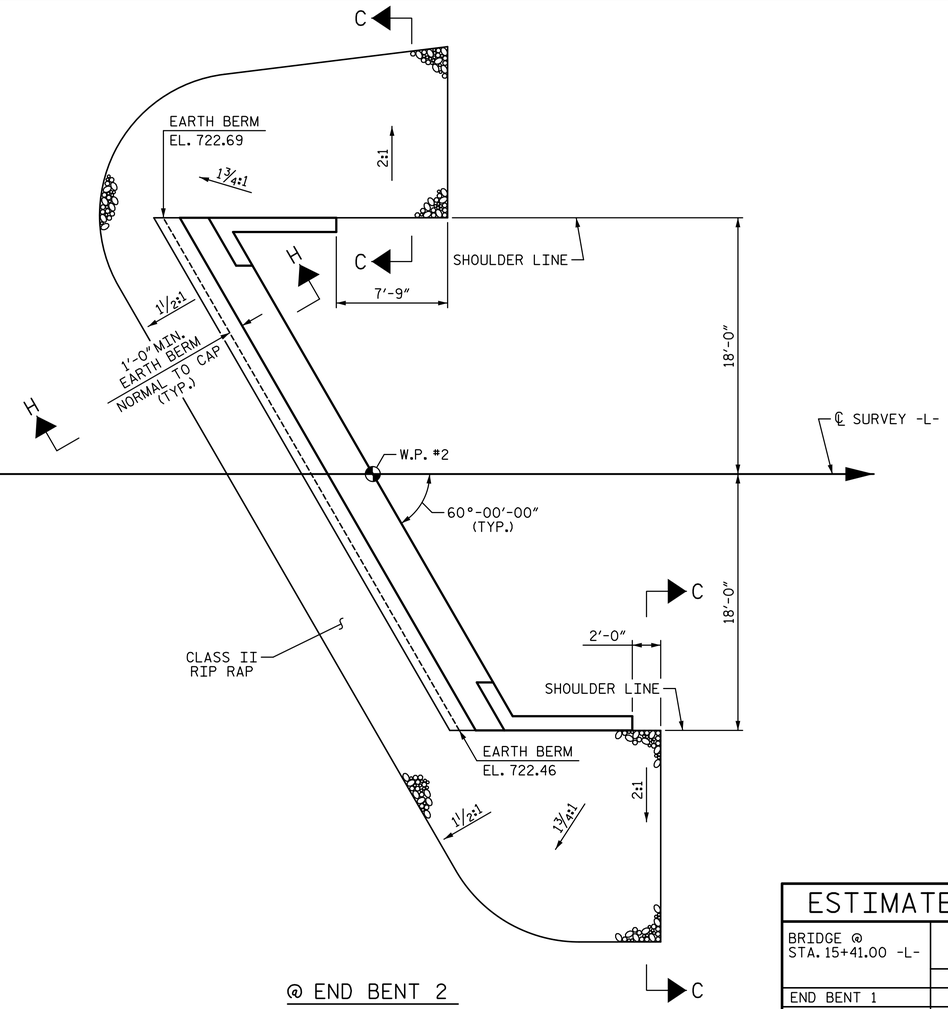

@ END BENT 2

PLAN OF RIP RAP

ESTIMATED QUANTITIES		
BRIDGE @ STA. 15+41.00 -L-	RIP RAP CLASS II (2'-0" THICK)	GEOTEXTILE FOR DRAINAGE
	TONS	SQUARE YARDS
END BENT 1	105	120
END BENT 2	95	105

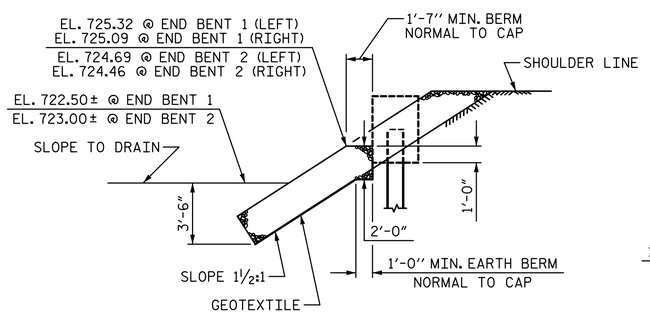

SECTION H-H

END BENT 2 SHOWN,
END BENT 1 SIMILAR

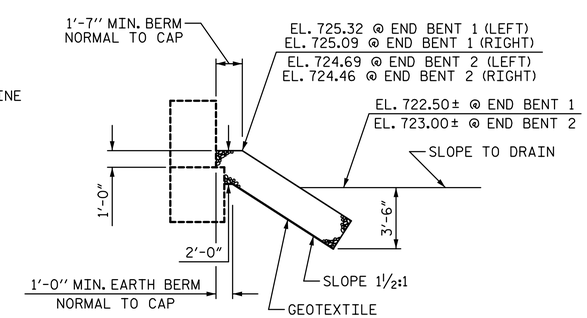

℄ SECTION
BERM RIP RAPPED

END BENT 1 SHOWN,
END BENT 2 SIMILAR

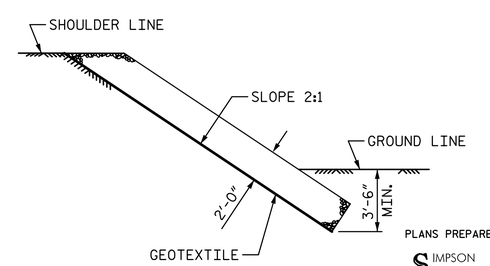

SECTION C-C

PROJECT NO. 17BP.7.R.30
ROCKINGHAM COUNTY
STATION: 15+41.00 -L-

STATE OF NORTH CAROLINA
DEPARTMENT OF TRANSPORTATION
RALEIGH

RIP RAP DETAILS

PLANS PREPARED BY:
SIMPSON ENGINEERS & ASSOCIATES
5640 Dillard Drive
Suite 200
Cary, NC 27518
(919) 852-0468
(919) 852-0598 (Fax)
www.simpsonengr.com
LICENSURE NO. C-2521

NORTH CAROLINA PROFESSIONAL SEAL 11268 ENGINEER BETSY S. COX
Docu Signed by: Betsy S. Cox
F6307DB9C9D4AE...
4/19/2016

DOCUMENT NOT CONSIDERED FINAL
UNLESS ALL SIGNATURES COMPLETED

REVISIONS						
NO.	BY:	DATE:	NO.	BY:	DATE:	
1			3			
2			4			

SHEET NO. S-13
TOTAL SHEETS 15

DRAWN BY: T. BANKOVICH DATE: 4-16
CHECKED BY: B.S. COX DATE: 4-16
DESIGN ENGINEER OF RECORD: B.S. COX DATE: 4-16

4/18/2016 2:07:48 PM G:\Projects\2015\Rockingham 191 (17BP7R30)\Structures\Drawings\Final\401_17BP7R30_SMU_rr.dgn

DocuSign Envelope ID: 61BBD2F3-877F-4B0C-A3C7-61BFA1FB2806

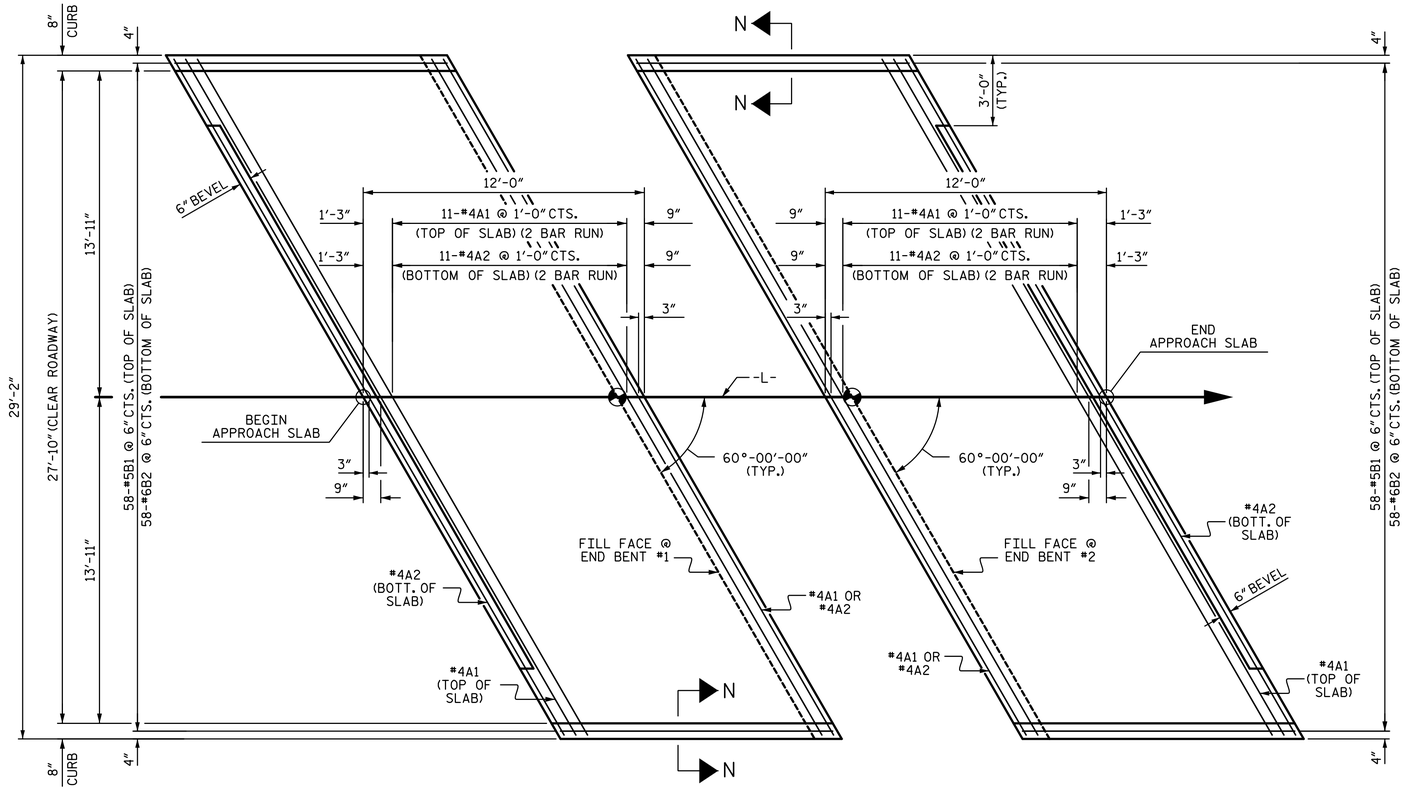

PLAN @ END BENT 1

PLAN @ END BENT 2

DIMENSIONS SHOWN ARE TYPICAL FOR BOTH APPROACH SLABS

NOTES:

FOR BRIDGE APPROACH FILL INCLUDING GEOTEXTILE, 4"Ø DRAINAGE PIPE, AND #78M STONE BACKFILL, SEE ROADWAY PLANS.

GEOTEXTILE SHALL BE TYPE 1 IN ACCORDANCE WITH THE STANDARD SPECIFICATIONS SECTION 1056.

#78M STONE BACKFILL (CLASS V SELECT MATERIAL) SHALL BE IN ACCORDANCE WITH STANDARD SPECIFICATIONS SECTION 1016.

#78M STONE BACKFILL IS TO BE CONTINUOUS ALONG FILL FACE OF BACKWALL FROM OUTSIDE EDGE TO OUTSIDE EDGE OF APPROACH SLAB.

FOR THE 4"Ø DRAINAGE PIPE OUTLET(S), SEE ROADWAY STANDARD DRAWINGS.

AREA BETWEEN THE WINGWALL AND APPROACH SLAB SHALL BE GRADED TO DRAIN THE WATER AWAY FROM THE FILL FACE OF THE BRIDGE AND SHALL BE PAVED. SEE ROADWAY PLANS.

APPROACH SLAB GROOVING IS NOT REQUIRED.

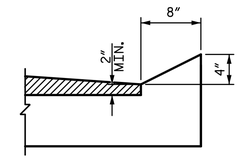

SECTION N-N

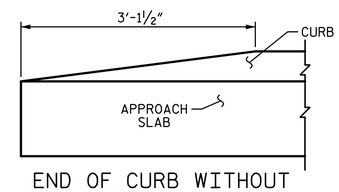

END OF CURB WITHOUT SHOULDER BERM GUTTER

CURB DETAILS

BILL OF MATERIAL

APPROACH SLAB AT EB 1

BAR	NO.	SIZE	TYPE	LENGTH	WEIGHT
A1E	26	#4	STR	17'-8"	307
A2	26	#4	STR	17'-7"	305
B1E	58	#5	STR	11'-1"	670
B2	58	#6	STR	11'-7"	1009
REINFORCING STEEL				LBS.	1314
"E" EPOXY COATED REINFORCING STEEL				LBS.	977
CLASS AA CONCRETE				C. Y.	18.0

APPROACH SLAB AT EB 2

BAR	NO.	SIZE	TYPE	LENGTH	WEIGHT
A1E	26	#4	STR	17'-8"	307
A2	26	#4	STR	17'-7"	305
B1E	58	#5	STR	11'-1"	670
B2	58	#6	STR	11'-7"	1009
REINFORCING STEEL				LBS.	1314
"E" EPOXY COATED REINFORCING STEEL				LBS.	977
CLASS AA CONCRETE				C. Y.	18.0

SPLICE CHART

BAR SIZE	EPOXY COATED	UNCOATED
#4	2'-0"	1'-9"
#5	2'-6"	2'-2"
#6	3'-10"	2'-7"

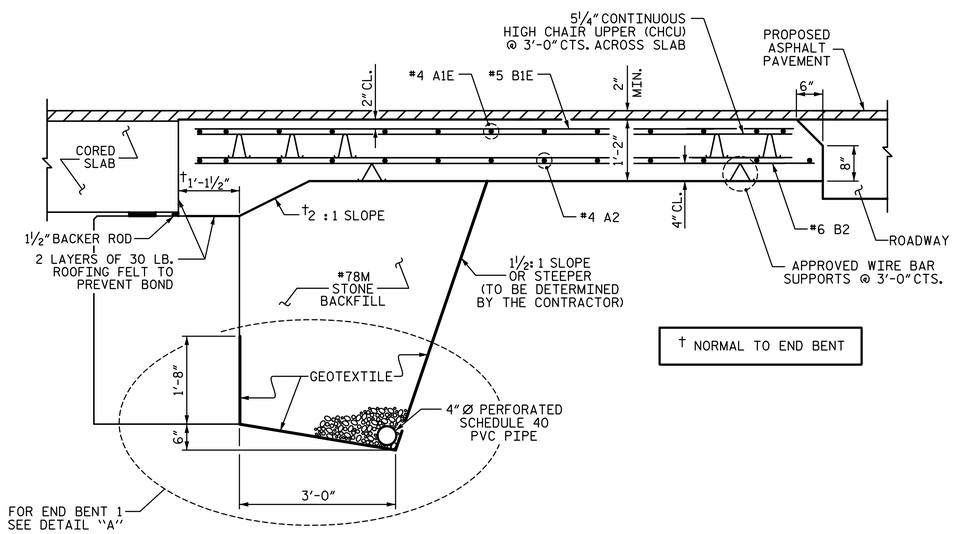

† NORMAL TO END BENT

SECTION THRU SLAB

END BENT 2 SHOWN, END BENT 1 SIMILAR

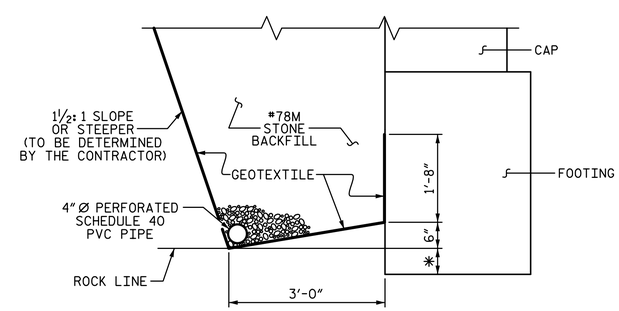

DETAIL "A"

@ END BENT 1

✳ 6" MINIMUM IF INTO ROCK OR 1'-0" MINIMUM IF WEATHERED ROCK

PROJECT NO. 17BP.7.R.30

ROCKINGHAM COUNTY

STATION: 15+41.00 -L-

SHEET 1 OF 2

STATE OF NORTH CAROLINA
DEPARTMENT OF TRANSPORTATION
RALEIGH

BRIDGE APPROACH SLAB DETAILS

PLANS PREPARED BY:

SIMPSON ENGINEERS & ASSOCIATES
5640 Dillard Drive
Suite 200
Cary, NC 27518
(919) 852-0468
(919) 852-0598 (Fax)
www.simpsonengr.com
LICENSURE NO. C-2521

NORTH CAROLINA PROFESSIONAL SEAL 11268 ENGINEER BETSY S. COX
DocuSigned by: Betsy S. Cox
4/19/2016

DOCUMENT NOT CONSIDERED FINAL UNLESS ALL SIGNATURES COMPLETED

REVISIONS								SHEET NO.
NO.	BY:	DATE:	NO.	BY:	DATE:			S-14
1			3					TOTAL SHEETS
2			4					15

DRAWN BY: T. BANKOVICH DATE: 4-16
CHECKED BY: B.S. COX DATE: 4-16
DESIGN ENGINEER OF RECORD: B.S. COX DATE: 4-16

4/18/2016 2:07:49 PM G:\Projects\2015\Rockingham 191 (17BP7R30)\Structures\Drawings\Final\401_17BP7R30_SMU_AS.dgn

DocuSign Envelope ID: 61BBD2F3-877F-4B0C-A3C7-61BFA1FB2806

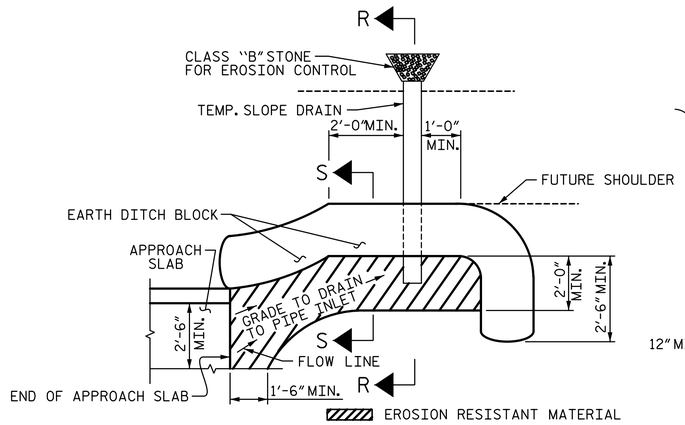

NOTE: IMMEDIATELY AFTER THE CONSTRUCTION OF THE APPROACH SLAB, THE CONTRACTOR SHALL PROVIDE TEMPORARY BERM AND SLOPE DRAIN. CONTRACTOR SHALL GRADE TO PIPE INLET AND PROVIDE EROSION RESISTANT MATERIAL AS SHOWN. THE EROSION RESISTANT MATERIAL SHALL BE EITHER 1) ASPHALT PLANT MIX, TYPE 1 OR TYPE 2, MIN. 2" DEPTH, 2) EROSION CONTROL MAT, OR 3) CONCRETE, AS DIRECTED BY THE ENGINEER. THE SLOPE DRAIN SHALL CONSIST OF A NON-PERFORATED TEMPORARY DRAINAGE PIPE, 12 INCHES IN DIAMETER.

PLAN VIEW

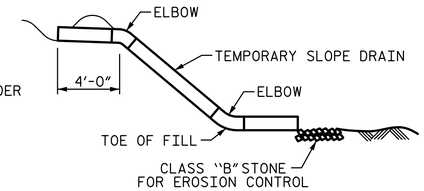

SECTION R-R

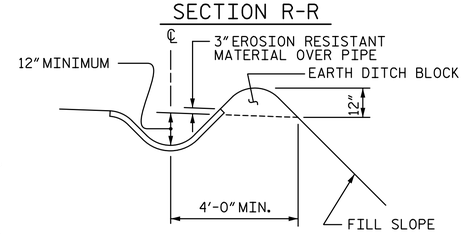

SECTION S-S

TEMPORARY BERM AND SLOPE DRAIN DETAILS

(TO BE USED WHEN SHOULDER BERM GUTTER IS REQUIRED)

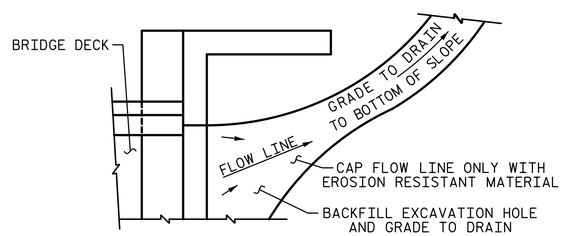

NOTE: IF THE APPROACH SLAB IS NOT CONSTRUCTED IMMEDIATELY AFTER THE BACKFILLING OF THE END BENT EXCAVATION, GRADE TO DRAIN TO THE BOTTOM OF THE SLOPE AND PROVIDE EROSION RESISTANT MATERIAL, SUCH AS FIBERGLASS ROVING OR AS DIRECTED BY THE ENGINEER TO PREVENT SOIL EROSION AND TO PROTECT THE AREA ADJACENT TO THE STRUCTURE. THE CONTRACTOR WILL BE REQUIRED TO REMOVE THESE MATERIALS PRIOR TO CONSTRUCTION OF THE APPROACH SLAB.

TEMPORARY DRAINAGE DETAIL

PROJECT NO. 17BP.7.R.30
ROCKINGHAM COUNTY
STATION: 15+41.00 -L-

SHEET 2 OF 2

STATE OF NORTH CAROLINA
DEPARTMENT OF TRANSPORTATION
RALEIGH

BRIDGE APPROACH SLAB DETAILS

PLANS PREPARED BY:
SIMPSON ENGINEERS & ASSOCIATES
5640 Dillard Drive
Suite 200
Cary, NC 27518
(919) 852-0468
(919) 852-0598 (Fax)
www.simpsonengr.com
LICENSURE NO. C-2521

NORTH CAROLINA PROFESSIONAL SEAL 11268 ENGINEER BETSY S. COX
DocuSigned by: Betsy S. Cox
103D7D8B0D9A4E4...
4/19/2016

DOCUMENT NOT CONSIDERED FINAL UNLESS ALL SIGNATURES COMPLETED

REVISIONS						SHEET NO.
NO.	BY:	DATE:	NO.	BY:	DATE:	S-15
1			3			TOTAL SHEETS
2			4			15

DRAWN BY: T. BANKOVICH DATE: 4-16
CHECKED BY: B.S. COX DATE: 4-16
DESIGN ENGINEER OF RECORD: B.S. COX DATE: 4-16

4/18/2016 2:07:49 PM G:\Projects\2015\Rockingham 191 (17BP7R30)\Structures\Drawings\Final\401_17BP7R30_SMU_AS.dgn

STANDARD NOTES

DESIGN DATA:

SPECIFICATIONS	A.A.S.H.T.O. (CURRENT)
LIVE LOAD	SEE PLANS
IMPACT ALLOWANCE	SEE A.A.S.H.T.O.
STRESS IN EXTREME FIBER OF	
STRUCTURAL STEEL - AASHTO M270 GRADE 36	20,000 LBS. PER SQ. IN.
- AASHTO M270 GRADE 50W	27,000 LBS. PER SQ. IN.
- AASHTO M270 GRADE 50	27,000 LBS. PER SQ. IN.
REINFORCING STEEL IN TENSION	
GRADE 60	24,000 LBS. PER SQ. IN.
CONCRETE IN COMPRESSION	1,200 LBS. PER SQ. IN.
CONCRETE IN SHEAR	SEE A.A.S.H.T.O.
STRUCTURAL TIMBER - TREATED OR	
UNTREATED - EXTREME FIBER STRESS	1,800 LBS. PER SQ. IN.
COMPRESSION PERPENDICULAR TO GRAIN OF TIMBER	375 LBS. PER SQ. IN.
EQUIVALENT FLUID PRESSURE OF EARTH	30 LBS. PER CU. FT. (MINIMUM)

MATERIAL AND WORKMANSHIP:

EXCEPT AS MAY OTHERWISE BE SPECIFIED ON PLANS OR IN THE SPECIAL PROVISIONS, ALL MATERIAL AND WORKMANSHIP SHALL BE IN ACCORDANCE WITH THE 2012 "STANDARD SPECIFICATIONS FOR ROADS AND STRUCTURES" OF THE N. C. DEPARTMENT OF TRANSPORTATION.

STEEL SHEET PILING FOR PERMANENT OR TEMPORARY APPLICATIONS SHALL BE HOT ROLLED.

CONCRETE:

UNLESS OTHERWISE REQUIRED ON PLANS, CLASS A CONCRETE SHALL BE USED FOR ALL PORTIONS OF ALL STRUCTURES WITH THE EXCEPTION THAT: CLASS AA CONCRETE SHALL BE USED IN BRIDGE SUPERSTRUCTURES, ABUTMENT BACKWALLS, AND APPROACH SLABS; AND CLASS B CONCRETE SHALL BE USED FOR SLOPE PROTECTION AND RIP RAP.

CONCRETE CHAMFERS:

UNLESS OTHERWISE NOTED ON THE PLANS, ALL EXPOSED CORNERS ON STRUCTURES SHALL BE CHAMFERED 3/4" WITH THE FOLLOWING EXCEPTIONS: TOP CORNERS OF CURBS MAY BE ROUNDED TO 1-1/2" RADIUS WHICH IS BUILT INTO CURB FORMS; CORNERS OF TRANSVERSE FLOOR EXPANSION JOINTS SHALL BE ROUNDED WITH A 1/4" FINISHING TOOL UNLESS OTHERWISE REQUIRED ON PLANS; AND CORNERS OF EXPANSION JOINTS IN THE ROADWAY FACES AND TOPS OF CURBS AND SIDEWALKS SHALL BE ROUNDED TO A 1/4" RADIUS WITH A FINISHING STONE OR TOOL UNLESS OTHERWISE REQUIRED ON PLANS.

DOWELS:

DOWELS WHEN INDICATED ON PLANS AS FOR CULVERT EXTENSIONS, SHALL BE EMBEDDED AT LEAST 12" INTO THE OLD CONCRETE AND GROUTED INTO PLACE WITH 1:2 CEMENT MORTAR.

ALLOWANCE FOR DEAD LOAD DEFLECTION, SETTLEMENT: ETC. IN CASTING SUPERSTRUCTURES:

BRIDGES SHALL BE BUILT ON THE GRADE OR VERTICAL CURVE SHOWN ON PLANS. SLABS, CURBS AND PARAPETS SHALL CONFORM TO THE GRADE OR CURVE.

ALL DIMENSIONS WHICH ARE GIVEN IN SECTION AND ARE AFFECTED BY DEAD LOAD DEFLECTIONS ARE DIMENSIONS AT CENTER LINE OF BEARING UNLESS OTHERWISE NOTED ON PLANS. IN SETTING FORMS FOR STEEL BEAM BRIDGES AND PRESTRESSED CONCRETE GIRDER BRIDGES, ADJUSTMENTS SHALL BE MADE DUE TO THE DEAD LOAD DEFLECTIONS FOR THE ELEVATIONS SHOWN. WHERE BLOCKS ARE SHOWN OVER BEAMS FOR BUILDING UP TO THE SLAB, THE VERTICAL DIMENSIONS OF THE BLOCKS SHALL BE ADJUSTED BETWEEN BEARINGS TO COMPENSATE FOR DEAD LOAD DEFLECTIONS, VERTICAL CURVE ORDINATE, AND ACTUAL BEAM CAMBER. WHERE BOTTOM OF SLAB IS IN LINE WITH BOTTOM OF TOP FLANGES, DEPTH OF SLAB BETWEEN BEARINGS SHALL BE ADJUSTED TO COMPENSATE FOR DEAD LOAD DEFLECTION, VERTICAL CURVE ORDINATE, AND ACTUAL BEAM CAMBER.

IN SETTING FALSEWORK AND FORMS FOR REINFORCED CONCRETE SPANS, AN ALLOWANCE SHALL BE MADE FOR DEAD LOAD DEFLECTIONS, SETTLEMENT OF FALSEWORK, AND PERMANENT CAMBER WHICH SHALL BE PROVIDED FOR IN ADDITION TO THE ELEVATIONS SHOWN. AFTER REMOVAL OF THE FALSEWORK, THE FINISHED STRUCTURES SHALL CONFORM TO THE PROFILE AND ELEVATIONS SHOWN ON THE PLANS AND CONSTRUCTION ELEVATIONS FURNISHED BY THE ENGINEER.

DETAILED DRAWINGS FOR FALSEWORK OR FORMS FOR BRIDGE SUPERSTRUCTURE AND ANY STRUCTURE OR PARTS OF A STRUCTURE AS NOTED ON THE PLANS SHALL BE SUBMITTED TO THE ENGINEER FOR APPROVAL BEFORE CONSTRUCTION OF THE FALSEWORK OR FORMS IS STARTED.

REINFORCING STEEL:

ALL REINFORCING STEEL SHALL BE DEFORMED. DIMENSIONS RELATIVE TO PLACEMENT OF REINFORCING ARE TO CENTERS OF BARS UNLESS OTHERWISE INDICATED IN THE PLANS. DIMENSIONS ON BAR DETAILS ARE TO CENTERS OF BARS OR ARE OUT TO OUT AS INDICATED ON PLANS.

WIRE BAR SUPPORTS SHALL BE PROVIDED FOR REINFORCING STEEL WHERE INDICATED ON THE PLANS. WHEN BAR SUPPORT PIECES ARE PLACED IN CONTINUOUS LINES, THEY SHALL BE SO PLACED THAT THE ENDS OF THE SUPPORTING WIRES SHALL BE LAPPED TO LOCK LEGS ON ADJOINING PIECES.

STRUCTURAL STEEL:

AT THE CONTRACTOR'S OPTION, HE MAY SUBSTITUTE 7/8" Ø SHEAR STUDS FOR THE 3/4" Ø STUDS SPECIFIED ON THE PLANS. THIS SUBSTITUTION SHALL BE MADE AT THE RATE OF 3 - 7/8" Ø STUDS FOR 4 - 3/4" Ø STUDS, AND STUD SPACING CHANGES SHALL BE MADE AS NECESSARY TO PROVIDE THE SAME EQUIVALENT NUMBER OF 7/8" Ø STUDS ALONG THE BEAM AS SHOWN FOR 3/4" Ø STUDS BASED ON THE RATIO OF 3 - 7/8" Ø STUDS FOR 4 - 3/4" Ø STUDS. STUDS OF THE LENGTH SPECIFIED ON THE PLANS MUST BE PROVIDED. THE MAXIMUM SPACING SHALL BE 2'-0".

EXCEPT AT THE INTERIOR SUPPORTS OF CONTINUOUS BEAMS WHERE THE COVER PLATE IS IN CONTACT WITH BEARING PLATE, THE CONTRACTOR MAY, AT HIS OPTION, SUBSTITUTE FOR THE COVER PLATES DESIGNATED ON THE PLANS COVER PLATES OF THE EQUIVALENT AREA PROVIDED THESE PLATES ARE AT LEAST 5/16" IN THICKNESS AND DO NOT EXCEED A WIDTH EQUAL TO THE FLANGE WIDTH LESS 2" OR A THICKNESS EQUAL TO 2 TIMES THE FLANGE THICKNESS. THE SIZE OF FILLET WELDS SHALL CONFORM TO THE REQUIREMENTS OF THE CURRENT ANSI/AASHTO/AWS "BRIDGE WELDING CODE". ELECTROSLAG WELDING WILL NOT BE PERMITTED.

WITH THE SOLE EXCEPTION OF EDGES AT SURFACES WHICH BEAR ON OTHER SURFACES, ALL SHARP EDGES AND ENDS OF SHAPES AND PLATES SHALL BE SLIGHTLY ROUNDED BY SUITABLE MEANS TO A RADIUS OF APPROXIMATELY 1/16 INCH OR EQUIVALENT FLAT SURFACE AT A SUITABLE ANGLE PRIOR TO PAINTING, GALVANIZING, OR METALLIZING.

HANDRAILS AND POSTS:

METAL STANDARDS AND FACES OF THE CONCRETE END POSTS FOR THE METAL RAIL SHALL BE SET NORMAL TO THE GRADE OF THE CURB, UNLESS OTHERWISE SHOWN ON PLANS. THE METAL RAIL AND TOPS OF CONCRETE POSTS USED WITH THE ALUMINUM RAIL SHALL BE BUILT PARALLEL TO THE GRADE OF THE CURB.

METAL HANDRAILS SHALL BE IN ACCORDANCE WITH THE PLANS. RAILS SHALL BE AS MANUFACTURED FOR BRIDGE RAILING. CASTINGS SHALL BE OF A UNIFORM APPEARANCE. FINS AND OTHER DEFORMATIONS RESULTING FROM CASTING OR OTHERWISE SHALL BE REMOVED IN A MANNER SO THAT A UNIFORM COLORING OF THE COMPLETED CASTING SHALL BE OBTAINED. CASTINGS WITH DISCOLORATIONS OR OF NON-UNIFORM COLORING WILL NOT BE ACCEPTED. CERTIFIED MILL REPORTS ARE REQUIRED FOR METAL RAILS AND POSTS.

SPECIAL NOTES:

GENERALLY, IN CASE OF DISCREPANCY, THIS STANDARD SHEET OF NOTES SHALL GOVERN OVER THE SPECIFICATIONS, BUT THE REMAINDER OF THE PLANS SHALL GOVERN OVER NOTES HEREON, AND SPECIAL PROVISIONS SHALL GOVERN OVER ALL. SEE SPECIFICATIONS ARTICLE 105-4.

ENGLISH

JANUARY, 1990

4/18/2016 2:07:49 PM G:\Projects\2015\Rockingham 191 (17BP7R30)\Structures\Drawings\Final\401_17BP7R30_SMU_SN.DGN