I-40/I-85 ALAMANCE COUNTY REST AREA VENDING BUILDINGS "BID DOCUMENTS"

SCO ID #: 14-11287-01A

I-40/I-85 MILE MARKER 139, ALAMANCE COUNTY, NC
NC DEPARTMENT OF TRANSPORTATION
FACILITIES MANAGEMENT DIVISION

ARCHITECT OF RECORD

LISA L. KEEL, AIA — (919) 707-4548
NORTH CAROLINA DEPARTMENT OF TRANSPORTATION — llkeel@ncdot.gov
FACILITIES MANAGEMENT DIVISION

STRUCTURAL ENGINEER OF RECORD

MICHAEL MOUNTCASTLE, P.E. — (919) 707-4547
NORTH CAROLINA DEPARTMENT OF TRANSPORTATION — mdmountcastle@ncdot.gov
FACILITIES MANAGEMENT DIVISION

PLUMBING / MECHANICAL / ELECTRICAL ENGINEER OF RECORD

BURKE DESIGN GROUP, BEN BURKE, P.E. — (919) 771-1916
benburke@rr.nc.com

SITE DEVELOPMENT-LANDSCAPE ARCHITECT OF RECORD

BOB KOPETSKY, RLA — (919) 707-2934
NORTH CAROLINA DEPARTMENT OF TRANSPORTATION — bkopetsky@ncdot.gov
ROADSIDE ENVIRONMENTAL UNIT

INDEX OF DRAWINGS

T1 TITLE SHEET
T2 BUILDING CODE SUMMARY

STRUCTURAL
S1 FOUNDATION PLAN; FRAMING PLAN
S2 DETAILS
S3 DETAILS, GENERAL NOTES

ARCHITECTURAL
A1.1 FLOOR PLAN; REFLECTED CEILING PLAN; ROOF PLAN & DETAILS
A2.1 EXTERIOR ELEVATIONS
A2.2 EXISTING BUILDING ELEVATION & DETAILS
A3.1 BUILDING SECTIONS
A3.2 WALL SECTIONS & DETAILS
A4.1 ROOM FINISH & DOOR SCHEDULES; DOOR ELEVATIONS; HEAD, JAMB & SILL DETAILS

PLUMBING
P1 PLUMBING PLAN

MECHANICAL
M1 HVAC PLAN

ELECTRICAL
E1 ELECTRICAL DETAILS/SPECIFICATIONS
E2 ELECTRICAL PLANS

SITE UTILITIES
U1 NBL UTILITY PLAN
U2 SBL UTILITY PLAN
U3 UTILITY DETAILS

ABBREVIATIONS AND SYMBOLS

EARTH
OTHER SOIL, MULCH
POROUS FILL, GRAVEL
BRICK, OTHER MATL
CMU
CONCRETE
BATT INSULATION
RIGID INSULATION
FIBER CEMENT BOARD
FINISH WOOD
ROUGH WOOD CONTINUOUS
ROUGH WOOD BLOCKING
PLYWOOD, OSB
STEEL, METAL
GYPSUM BOARD, OTHER MATERIAL
GLASS, GLAZING
ACOUSTICAL TILE

E6 / A1 — DETAIL NUMBER / SHEET NUMBER
3 — KEYED NOTE
203 — ROOM NUMBER
101A — DOOR MARKER
B — WINDOW MARKER
CENTER LINE, DATUM LINE
HIDDEN LINE
BREAK LINE
PROPERTY LINE
269 — EXISTING CONTOUR
269 — NEW CONTOUR
FENCE
SILT FENCE
SPOT ELEVATION OR DATUM
B1 — SOIL BORING NO. 1

∠	ANGLE, LENGTH
AL	ALUMINUM
AB	ANCHOR BOLT
AFF	ABOVE FINISH FLOOR
ALT	ALTERNATE
APRX	APPROXIMATE
ARCH	ARCHITECTURAL
AVG	AVERAGE
BB	BACK TO BACK
BSMT	BASEMENT
BRG	BEARING
BM	BENCHMARK
BLKG	BLOCKING
BD	BOARD
BLDG	BUILDING
CAB	CABINET
CANTL	CANTILEVER
CB	CATCH BASIN
C&G	CURB AND GUTTER
CIP	CAST IRON PIPE
CJ	CONTROL JT, CEILING JST
℄	CENTERLINE
CL	CLOSET
CLR AN	CLEAR ANODIZED
CLG	CEILING
CLKG	CAULKING
CMU	CONCRETE MASONRY UNIT
COL	COLUMN
CONC	CONCRETE
CONT	CONTINUOUS
CRS	COURSES
D	DEEP, DEPTH
DBL	DOUBLE
DET	DETAIL
DIA	DIAMETER
DIAG	DIAGONAL
DIM	DIMENSION
DN	DOWN
DS	DOWNSPOUT
EA	EACH
EW	EACH WAY
ELEC	ELECTRICAL
EL	ELEVATION
ELEV	ELEVATOR
EXIST	EXISTING
EJ	EXPANSION JOINT
EXT	EXTERIOR
EWC	ELECTRIC WATER COOLER
FE, FEC	FIRE EXTINGUISHER, CABINET
FD	FLOOR DRAIN
FF	FACTORY FINISH
FFE	FINISH FLOOR ELEVATION
FIN FL	FINISH FLOOR
FTG	FOOTING
FV	FIELD VERIFY
FOM	FACE OF MASONRY
FOS	FACE OF STUD
FOF	FACE OF FINISH
GALV	GALVANIZED
GA	GAUGE
GL	GLASS, GLAZING
GWB	GYPSUM WALL BOARD
GYP	GYPSUM
HB	HOSE BIB
HM	HOLLOW METAL
HORIZ	HORIZONTAL
H	HIGH, HEIGHT
INSUL	INSULATION
INT	INTERIOR
INV	INVERT
JC	JANITOR'S CLOSET
JST	JOIST
KS	KNEE SPACE
LAV	LAVATORY
LB, #	POUND
MFR	MANUFACTURER
MH	MANHOLE
MO	MASONRY OPENING
MATL	MATERIAL
MAX	MAXIMUM
MIN	MINIMUM
MTD	MOUNTED
MLD	MOULDING
NIC	NOT IN CONTRACT
NTS	NOT TO SCALE
NO.	NUMBER
OC	ON CENTER
OPNG	OPENING
OSB	ORIENTED STRAND BOARD
PNL	PANEL
PL LAM	PLASTIC LAMINATE
PL	PLATE
PLMB	PLUMBING
PLWD	PLYWOOD
PREFAB	PREFABRICATED
PSI	POUNDS PER SQ INCH
R	RISER, ROD
RD	ROOF DRAIN
REF	REFRIGERATOR
REQD	REQUIRED
REV	REVERSED, REVISION
SAC	SUSPENDED ACOUSTICAL TILE
SCT	SUSPENDED CEILING TILE
SAN	SANITARY
SECT	SECTION
SFGL	SAFTY GLASS
SH	SHELF, SHELVES
SHT	SHEET
SHTG	SHEATHING
SIM	SIMILAR
SPEC	SPECIFICATION
SQ	SQUARE
SS	STAINLESS STEEL, SANITARY SEWER
STD	STANDARD
STL	STEEL
STO	STORAGE
T	TREAD
T&G	TONGUE AND GROOVE
TLT	TOILET
TOF	TOP OF FOOTING
TOJ	TOP OF JOIST
TOS	TOP OF STEEL
TOW	TOP OF WALL
TRTD	TREATED
TYP	TYPICAL
UNFIN	UNFINISHED
UON	UNLESS OTHERWISE NOTED
VERT	VERTICAL
W	WIDE, WIDTH
W	WITH
WWF	WOVEN WIRE FABRIC
WD	WOOD

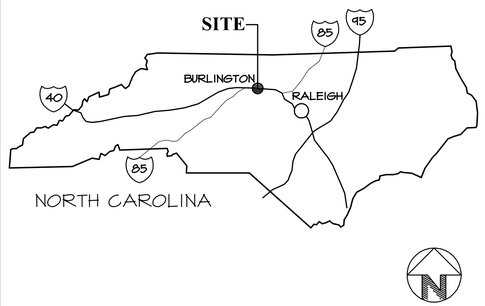

LOCATION MAP

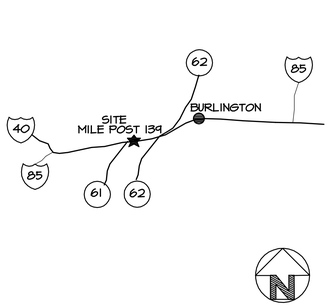

VICINITY MAP

BID DOCUMENTS

LISA LARKIN KEEL — REGISTERED ARCHITECT — 6195 — NORTH CAROLINA — RALEIGH, N.C.
SEAL:
SEAL NOT VALID UNLESS SIGNED AND DATED

DESIGNED BY:
FACILITIES DESIGN
ARCHITECTS & ENGINEERS
FACILITIES MANAGEMENT DIVISION, NCDOT
1 SOUTH WILMINGTON STREET
RALEIGH, NORTH CAROLINA 27601
PH:919/707-4640 FAX:919/715-0369

CONSULTANT:

DRAWING TITLE / DISCRIPTION: TITLE SHEET

PROJECT TITLE:
I-40/I-85 ALAMANCE COUNTY
REST AREA VENDING BUILDINGS
MILE MARKER 139, BURLINGTON, ALAMANCE COUNTY, NORTH CAROLINA

SCO ID NO.	14-11287-01A
TIP PROJ. NO.	-
WBS NO.	3707.3.23
FEDERAL ID NO.	-

ASSET NUMBER:
CO.# SITE.# BLDG.#
01 ▪ 013 ▪ X

REVISIONS
NO. DATE

DATE ISSUED: 4-23-15
DRAWN BY: AS
CHECKED BY: LK

SHEET NO.
T1

2012 APPENDIX B
BUILDING CODE SUMMARY
FOR ALL COMMERCIAL PROJECTS
(EXCEPT 1 AND 2-FAMILY DWELLINGS AND TOWNHOUSES)
(Reproduce the following data on the building plans sheet 1 or 2)

Name of Project: I-40/I-85 ALAMANCE COUNTY REST AREA VENDING BUILDINGS
Address: I-40/I-85 MILE MARKER 139, ALAMANCE COUNTY, NC Zip Code 27215
Proposed Use: REST AREA VENDING FACILITY- BUSINESS (B)
Owner/Authorized Agent: NCDOT Phone # (919) 707 - 4548 E-Mail llkeel@ncdot.gov
Owned By: ☐ City/County ☐ Private ☒ State
Code Enforcement Jurisdiction: ☐ City_____ ☐ County_____ ☒ State

LEAD DESIGN PROFESSIONAL: Lisa Keel

DESIGNER	FIRM	NAME	LICENSE #	TELEPHONE #	E-MAIL
Architectural	NCDOT	Lisa Keel	6195	(919)707-4550	llkeel@ncdot.gov
Civil				( )	
Electrical	Burke Design Group	Ben Burke	22038	(919)771-1916	benburke@nc.rr.com
Fire Alarm				( )	
Plumbing	Burke Design Group	Ben Burke	22038	(919)771-1916	benburke@nc.rr.com
Mechanical	Burke Design Group	Ben Burke	22038	(919)771-1916	benburke@nc.rr.com
Sprinkler System				( )	
Structural	NCDOT	Michael Mountcastle	17326	(919)707-4547	mdmountcastle@ncdot.gov
Retaining Walls >5' High				( )	
Other Landscape	NCDOT	Bob Kopetsky	1447	(919)707-2934	bkopetsky@ncdot.gov

2012 EDITION OF NC CODE FOR: ☒ New Construction ☐ Addition ☐ Upfit
EXISTING: ☐ Reconstruction ☐ Alteration ☐ Repair ☐ Renovation
CONSTRUCTED: (date) _____ **ORIGINAL USE(S)** (Ch. 3): _____
RENOVATED: (date) _____ **CURRENT USE(S)** (Ch. 3): _____
PROPOSED USE(S) (Ch. 3): _____

BASIC BUILDING DATA
Construction Type: (check all that apply) ☐ I-A ☐ I-B ☐ II-A ☐ II-B ☐ III-A ☐ III-B ☐ IV ☐ V-A ☒ V-B
Sprinklers: ☒ No ☐ Partial ☐ Yes ☐ NFPA 13 ☐ NFPA 13R ☐ NFPA 13D
Standpipes: ☒ No ☐ Yes Class ☐ I ☐ II ☐ III ☐ Wet ☐ Dry
Fire District: ☒ No ☐ Yes (Primary) **Flood Hazard Area:** ☒ No ☐ Yes
Building Height: (feet) 13'-8"
Gross Building Area:

FLOOR	EXISTING (SQ FT)	NEW (SQ FT)	SUB-TOTAL
6th Floor			
5th Floor			
4th Floor			
3rd Floor			
2nd Floor			
Mezzanine			
1st Floor		2 buildings-526 each	2 buildings-526 each
Basement			
TOTAL		2 buildings-526 each	2 buildings-526 each

ALLOWABLE AREA

Occupancy:
Assembly ☐ A-1 ☐ A-2 ☐ A-3 ☐ A-4 ☐ A-5
Business ☐
Educational ☐
Factory ☐ F-1 Moderate ☐ F-2 Low
Hazardous ☐ H-1 Detonate ☐ H-2 Deflagrate ☐ H-3 Combust ☐ H-4 Health ☐ H-5 HPM
Institutional ☐ I-1 ☐ I-2 ☐ I-3 ☐ I-4
I-3 Condition ☐ 1 ☐ 2 ☐ 3 ☐ 4 ☐ 5
Mercantile ☐
Residential ☐ R-1 ☐ R-2 ☐ R-3 ☐ R-4
Storage ☒ S-1 Moderate ☐ S-2 Low ☐ High-piled
☐ Parking Garage ☐ Open ☐ Enclosed ☐ Repair Garage
Utility and Miscellaneous ☐

Accessory Occupancies:
Assembly ☐ A-1 ☐ A-2 ☐ A-3 ☐ A-4 ☐ A-5
Business ☐
Educational ☐
Factory ☐ F-1 Moderate ☐ F-2 Low
Hazardous ☐ H-1 Detonate ☐ H-2 Deflagrate ☐ H-3 Combust ☐ H-4 Health ☐ H-5 HPM
Institutional ☐ I-1 ☐ I-2 ☐ I-3 ☐ I-4
I-3 Condition ☐ 1 ☐ 2 ☐ 3 ☐ 4 ☐ 5
Mercantile ☐
Residential ☐ R-1 ☐ R-2 ☐ R-3 ☐ R-4
Storage ☐ S-1 Moderate ☐ S-2 Low ☐ High-piled
☐ Parking Garage ☐ Open ☐ Enclosed ☐ Repair Garage
Utility and Miscellaneous ☐

Incidental Uses (Table 508.2.5):
☐ Furnace room where any piece of equipment is over 400,000 Btu per hour input
☐ Rooms with boilers where the largest piece of equipment is over 15 psi and 10 horsepower
☐ Refrigerant machine room
☐ Hydrogen cutoff rooms, not classified as Group H
☐ Incinerator rooms
☐ Paint shops, not classified as Group H, located in occupancies other than Group F
☐ Laboratories and vocational shops, not classified as Group H. located in a Group E or I-2 occupancy
☐ Laundry rooms over 100 square feet
☐ Group I-3 cells equipped with padded surfaces
☐ Group I-2 waste and linen collection rooms
☐ Waste and linen collection rooms over 100 square feet
☐ Stationary storage battery systems having a liquid electrolyte capacity of more than 50 gallons, or a lithium-ion capacity of 1,000 pounds used for facility standby power, emergency power or uninterrupted power supplies
☐ Rooms containing fire pumps
☐ Group I-2 storage rooms over 100 square feet
☐ Group I-2 commercial kitchens
☐ Group I-2 laundries equal to or less than 100 square feet
☐ Group I-2 rooms or spaces that contain fuel-fired heating equipment

Special Uses: ☐ 402 ☐ 403 ☐ 404 ☐ 405 ☐ 406 ☐ 407 ☐ 408 ☐ 409 ☐ 410 ☐ 411 ☐ 412 ☐ 413 ☐ 414 ☐ 415 ☐ 416 ☐ 417 ☐ 418 ☐ 419 ☐ 420 ☐ 421 ☐ 422 ☐ 423 ☐ 424 ☐ 425 ☐ 426 ☐ 427
Special Provisions: ☐ 509.2 ☐ 509.3 ☐ 509.4 ☐ 509.5 ☐ 509.6 ☐ 509.7 ☐ 509.8 ☐ 509.9
Mixed Occupancy: ☒ No ☐ Yes Separation:___ Hrs. Exception: _____
☐ Incidental Use Separation (508.2.5)

This separation is not exempt as a Non-Separated Use (see exceptions).
☐ Non-Separated Use (508.3)
The required type of construction for the building shall be determined by applying the height and area limitations for each of the applicable occupancies to the entire building. The most restrictive type of construction, so determined, shall apply to the entire building
☐ Separated Use (508.4) - See below for area calculations
For each story, the area of the occupancy shall be such that the sum of the ratios of the actual floor area of each use divided by the allowable floor area for each use shall not exceed 1.

$$\frac{\text{Actual Area of Occupancy A}}{\text{Allowable Area of Occupancy A}} + \frac{\text{Actual Area of Occupancy B}}{\text{Allowable Area of Occupancy B}} \leq 1$$

_____ + _____ + ... = _____ ≤ 1.00

STORY NO.	DESCRIPTION AND USE	(A) BLDG AREA PER STORY (ACTUAL)	(B) TABLE 503[3] AREA	(C) AREA FOR FRONTAGE INCREASE[1]	(D) AREA FOR SPRINKLER INCREASE[2]	(E) ALLOWABLE AREA OR UNLIMITED[3]	(F) MAXIMUM BUILDING AREA[4]
1	S-1	526	9,000	NOT USED	N/A	9,000	9,000
1	S-1	526	9,000	NOT USED	N/A	9,000	9,000

[1] Frontage area increases from Section 506.2 are computed thus:
a. Perimeter which fronts a public way or open space having 20 feet minimum width = __ (F)
b. Total Building Perimeter = __ (P)
c. Ratio (F/P) = __ (F/P)
d. W = Minimum width of public way = __ (W)
e. Percent of frontage increase I_f = 100 [F/P - 0.25] x W/30 = ___ (%)
[2] The sprinkler increase per Section 506.3 is as follows:
a. Multi-story building I_s = 200 percent
b. Single story building I_s = 300 percent
[3] Unlimited area applicable under conditions of Section 507.
[4] Maximum Building Area = total number of stories in the building x E (506.4).
[5] The maximum area of open parking garages must comply with Table 406.3.5. The maximum area of air traffic control towers must comply with Table 412.1.2.

ALLOWABLE HEIGHT

	ALLOWABLE (TABLE 503)	INCREASE FOR SPRINKLERS	SHOWN ON PLANS	CODE REFERENCE
Type of Construction	Type V - B		Type V - B	602.5
Building Height in Feet	40	Feet = H + 20' = N/A	13'-8"	503
Building Height in Stories	2	Stories + 1 = N/A	1	503

FIRE PROTECTION REQUIREMENTS

BUILDING ELEMENT	FIRE SEPARATION DISTANCE (FEET)	RATING REQ'D	RATING PROVIDED (W/ _____ * REDUCTION)	DETAIL # AND SHEET #	DESIGN # FOR RATED ASSEMBLY	DESIGN # FOR RATED PENETRATION	DESIGN # FOR RATED JOINTS
Structural Frame, including columns, girders, trusses	>30'	0					
Bearing Walls							
Exterior		0					
North							
East							
West							
South							
Interior		0					
Nonbearing Walls and Partitions		0					
Exterior walls							
North							
East							
West							
South							
Interior walls and partitions		0					
Floor Construction Including supporting beams and joists		0					
Roof Construction Including supporting beams and joists		0					
Shaft Enclosures - Exit							
Shaft Enclosures - Other							
Corridor Separation							
Occupancy Separation							
Party/Fire Wall Separation							
Smoke Barrier Separation							
Tenant Separation							
Incidental Use Separation							

* Indicate section number permitting reduction

LIFE SAFETY SYSTEM REQUIREMENTS

Emergency Lighting: ☐ No ☒ Yes
Exit Signs: ☐ No ☒ Yes
Fire Alarm: ☒ No ☐ Yes
Smoke Detection Systems: ☒ No ☐ Yes ☐ Partial _____
Panic Hardware: ☐ No ☒ Yes

LIFE SAFETY PLAN REQUIREMENTS

Life Safety Plan Sheet #: A1

☐ Fire and/or smoke rated wall locations (Chapter 7)
☐ Assumed and real property line locations
☐ Exterior wall opening area with respect to distance to assumed property lines (705.8)
☐ Existing structures within 30' of the proposed building
☒ Occupancy types for each area as it relates to occupant load calculation (Table 1004.1.1)
☒ Occupant loads for each area
☒ Exit access travel distances (1016) 250 ft.
☒ Common path of travel distances (1014.3 & 1028.8) 30 ft.
☐ Dead end lengths (1018.4) 20 ft.
☒ Clear exit widths for each exit door
☒ Maximum calculated occupant load capacity each exit door can accommodate based on egress width (1005.1)
☒ Actual occupant load for each exit door
☐ A separate schematic plan indicating where fire rated floor/ceiling and/or roof structure is provided for purposes of occupancy separation
☒ Location of doors with panic hardware (1008.1.10)
☐ Location of doors with delayed egress locks and the amount of delay (1008.1.9.7)
☐ Location of doors with electromagnetic egress locks (1008.1.9.8)
☐ Location of doors equipped with hold-open devices
☐ Location of emergency escape windows (1029)
☐ The square footage of each fire area (902)
☐ The square footage of each smoke compartment (407.4). Smoke barricades <22,500 sf. Max.
☐ Note any code exceptions or table notes that may have been utilized regarding the items above

ACCESSIBLE DWELLING UNITS
(SECTION 1107)

TOTAL UNITS	ACCESSIBLE UNITS REQUIRED	ACCESSIBLE UNITS PROVIDED	TYPE A UNITS REQUIRED	TYPE A UNITS PROVIDED	TYPE B UNITS REQUIRED	TYPE B UNITS PROVIDED	TOTAL ACCESSIBLE UNITS PROVIDED

ACCESSIBLE PARKING
(SECTION 1106)

LOT OR PARKING AREA	TOTAL # OF PARKING SPACES REQUIRED	TOTAL # OF PARKING SPACES PROVIDED	# OF ACCESSIBLE SPACES PROVIDED: REGULAR WITH 5' ACCESS AISLE	VAN SPACES WITH 132" ACCESS AISLE	VAN SPACES WITH 8' ACCESS AISLE	TOTAL # ACCESSIBLE PROVIDED
ALL EXISTING SPACES TO REMAIN						
TOTAL						

All existing spaces to remain open & accessible during all phases of construction.

STRUCTURAL DESIGN

DESIGN LOADS:
Importance Factors: Wind (I_W) 1.0; Snow (I_S) 1.0; Seismic (I_E) 1.0
Live Loads: Roof 20 psf; Mezzanine psf; Floor 100 psf
Ground Snow Load: 15 psf
Wind Load: Basic Wind Speed 90 mph (ASCE-7); Exposure Category B; Wind Base Shears (for MWFRS) Vx = _____ Vy = _____
SEISMIC DESIGN CATEGORY: ☐ A ☒ B ☐ C ☐ D
Provide the following Seismic Design Parameters:
Occupancy Category (Table 1604.5) ☐ I ☒ II ☐ III ☐ IV
Spectral Response Acceleration S_S 21.2 %g S_1 8.2 %g
Site Classification (Table 1613.5.2) ☐ A ☐ B ☐ C ☒ D ☐ E ☐ F
Data Source: ☐ Field Test ☒ Presumptive ☐ Historical Data
Basic structural system (check one)
☒ Bearing Wall ☐ Dual w/Special Moment Frame
☐ Building Frame ☐ Dual w/Intermediate R/C or Special Steel
☐ Moment Frame ☐ Inverted Pendulum
Seismic base shear: V_X = V_Y =
Analysis Procedure: ☐ Simplified ☒ Equivalent Lateral Force ☐ Dynamic
Architectural, Mechanical, Components anchored? ☐ Yes ☐ No
LATERAL DESIGN CONTROL: Earthquake ☐ Wind ☒
SOIL BEARING CAPACITIES:
Field Test (provide copy of test report) _____ psf
Presumptive Bearing capacity 1,500 psf
Pile size, type, and capacity _____
SPECIAL INSPECTIONS REQUIRED: ☐ Yes ☒ No

PLUMBING FIXTURE REQUIREMENTS
(TABLE 2902.1)

USE		WATER CLOSETS MALE	WATER CLOSETS FEMALE	URINALS	LAVATORIES MALE	LAVATORIES FEMALE	SHOWERS/ TUBS	DRINKING FOUNTAINS REGULAR	DRINKING FOUNTAINS ACCESSIBLE
A	EXISTING	-	-	-	-	-	-	-	-
	NEW	-	-	-	-	-	-	-	-
	REQUIRED	-	-	-	-	-	-	-	-

ALL FIXTURES LOCATED IN EXISTING REST AREA BUILDINGS-NO ALTERATIONS WILL BE MADE

SPECIAL APPROVALS

Special approval: (Local Jurisdiction, Department of Insurance, OSC, DPI, DHHS, ICC, etc., describe below)
_____
_____
_____

ENERGY SUMMARY

ENERGY REQUIREMENTS:
The following data shall be considered minimum and any special attribute required to meet the energy code shall also be provided. Each Designer shall furnish the required portions of the project information for the plan data sheet. If performance method, state the annual energy cost for the standard reference design vs annual energy cost for the proposed design.

Climate Zone: ☐ 3 ☒ 4 ☐ 5
Method of Compliance:
☐ Prescriptive (Energy Code)
☒ Performance (Energy Code) COMCheck
☐ Prescriptive (ASHRAE 90.1)
☐ Performance (ASHRAE 90.1)

THERMAL ENVELOPE .
Roof/ceiling Assembly (each assembly)
Description of assembly: Asphalt shingle roof w/ structural insulated panels
U-Value of total assembly: 0.025
R-Value of insulation: 38
Skylights in each assembly: NONE
U-Value of skylight: _____
total square footage of skylights in each assembly: _____
Exterior Walls (each assembly)-
Description of assembly: Brick Veneer, 1" air space, 1" rigid insulation, R-19 in 2x4 stud wall.
U-Value of total assembly: 0.04
R-Value of insulation: Batt-19.0, Rigid-5.0
Openings (windows or doors with glazing)
U-Value of assembly: 0.8-glass doors, 0.4 insul. metal door
Solar heat gain coefficient: 0.40
projection factor: 0.14
Door R-V alues: 1.25-glass doors, 2.5-insul. metal door
Walls below grade – NONE
Floors over unconditioned space – NONE
Floors slab on grade
Description of assembly: Poured-in-place concrete over vapor barrier
U-Value of total assembly: -
R-Value of insulation: -
Horizontal/vertical requirement: -
slab heated: NO

MECHANICAL SUMMARY

MECHANICAL SYSTEMS, SERVICE SYSTEMS AND EQUIPMENT
Thermal Zone 4A
winter dry bulb: 22
summer dry bulb: 94
Interior design conditions
winter dry bulb: 72
summer dry bulb: 75
relative humidity: 50%
Building heating load: 8,400 BTU/ Hr
Building cooling load: 11,800 BTU/ Hr
Mechanical Spacing Conditioning System
Unitary
description of unit: 1.5 TON DUCTLESS SPLIT SYSTEM HEAT PUMP
heating efficiency: SEE EQUIPMENT SCHEDULES
cooling efficiency: " " "
size category of unit: " " "
Boiler
Size category. If oversized, state reason.: N/A
Chiller
Size category. If oversized, state reason.: N/A
List equipment efficiencies: _____

ELECTRICAL SUMMARY

ELECTRICAL SYSTEM AND EQUIPMENT
Method of Compliance:
Energy Code: ☒ Prescriptive ☐ Performance
ASHRAE 90.1: ☐ Prescriptive ☐ Performance
Lighting schedule (each fixture type)
lamp type required in fixture: SEE LIGHT FIXTURE SCHEDULE
number of lamps in fixture: " " " "
ballast type used in the fixture: " " " "
number of ballasts in fixture: " " " "
total wattage per fixture: " " " "
total interior wattage specified vs. allowed (whole building or space by space): 419 VA/ 470 VA
total exterior wattage specified vs. allowed
Additional Prescriptive Compliance
☐ 506.2.1 More Efficient Mechanical Equipment
☐ 506.2.2 Reduced Lighting Power Density
☒ 506.2.3 Energy Recovery Ventilation Systems
☐ 506.2.4 Higher Efficiency Service Water Heating
☐ 506.2.5 On-Site Supply of Renewable Energy
☐ 506.2.6 Automatic Daylighting Control Systems

BID DOCUMENTS

SEAL: LISA LARKIN KEEL REGISTERED ARCHITECT 6195 Registered by: Lisa Larkin Keel RALEIGH, N.C.
SEAL NOT VALID UNLESS SIGNED AND DATED

DESIGNED BY:
FACILITIES DESIGN
ARCHITECTS & ENGINEERS
FACILITIES MANAGEMENT DIVISION, NCDOT
1 SOUTH WILMINGTON STREET
RALEIGH, NORTH CAROLINA 27601
PH:(919)707-4440 FAX:(919)715-0369

CONSULTANT:

DRAWING TITLE / DISCRIPTION: BUILDING CODE SUMMARY

PROJECT TITLE: I-40/I-85 ALAMANCE COUNTY REST AREA VENDING BUILDINGS
MILE MARKER 139, BURLINGTON, ALAMANCE COUNTY, NORTH CAROLINA

SCO ID NO.	14-11287-01A
TIP PROJ. NO.	–
WBS NO.	3707.3.23
FEDERAL ID NO.	–
ASSET NUMBER: CO.# SITE.# BLDG.#	01 - 013 - X

REVISIONS

NO.	DATE

DATE ISSUED: 4-23-15
DRAWN BY: AS
CHECKED BY: LLK
SHEET NO.
T2

* REUSE OF EXISTING TIMBER:

1. THIS PROJECT ATTEMPTS TO REUSE OLD TIMBERS FROM A LOCAL MILL. THIS MATERIAL WILL BE SUPPLIED BY THE OWNER, HOWEVER THE CONTRACTOR MAY BE RESPONSIBLE FOR TRANSPORTING MATERIAL TO SAWMILL IF REQ'D & TO THE JOB SITE. COORD W/ LOCAL OWNER REP.
2. SOME SIZES GIVEN ON PLANS ARE BASED ON MEASUREMENTS OF A REPRESENTATIVE SAMPLE OF EXISTING TIMBER. VERIFY ACTUAL SIZES PRIOR TO FABRICATION OF BRACKETS & OTHER CONSTRUCTION.
3. REMOVE ALL NAILS & OTHER HARDWARE FROM EXISTING WOOD PRIOR TO USE.
4. CONFIRM SUFFICIENT QUANTITY OF EXISTING MATERIAL. NOTIFY ARCH IF THERE IS INSUFFICIENT MATERIAL OR EXCESSIVE DAMAGE.
5. SEE ARCH FOR REQ'D FINISHES.

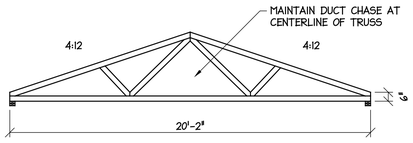

TRUSS PROFILE

BEAM SCHEDULE		
MARK	SIZE	REMARKS
BM-1	(2) 2X10	
BM-2	6X12 TIMBER	SPF #1, NEW TIMBER
BM-3	6X8 TIMBER	SPF #1, NEW TIMBER

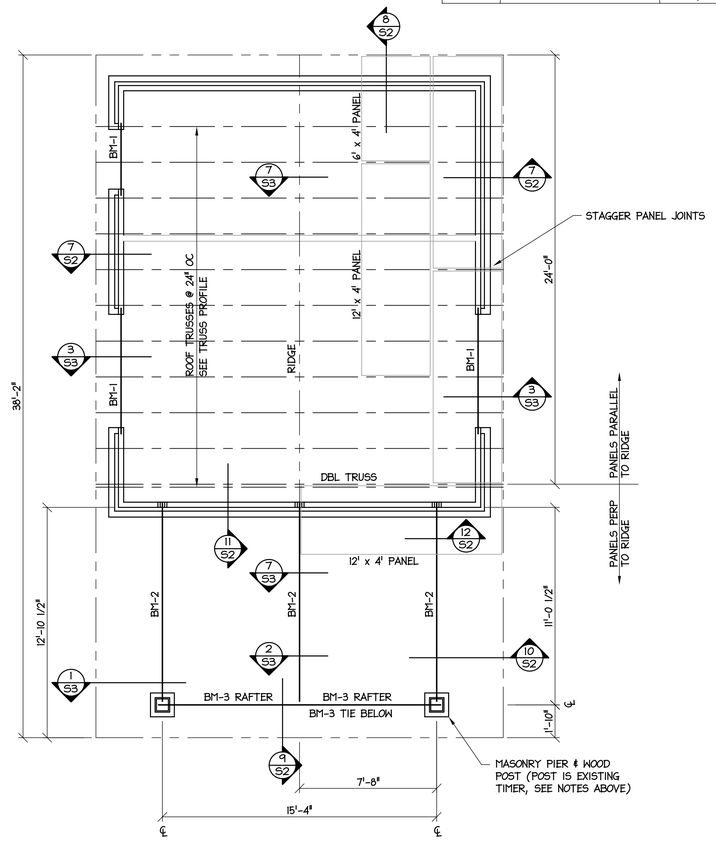

NOTES:

1. WALL SHEATHING SHALL BE ½" APA RATED SHEATHING, 32/16 SPAN RATING, EXPOSURE 1, ATTACHED W/ 8D NAILS @ 6" OC ALONG PANEL EDGES & 8" OC AT INTERIOR OF PANEL. BLOCK ALL PANEL EDGES W/ 2X4 BETWEEN WALL STUDS.
2. ROOF TRUSSES & STRUCTURAL INSULATED PANELS SHALL BE DESIGNED FOR ALL LOADS INDICATED ON PLANS & SPECIFICATIONS. SHOP DRAWINGS SHALL BE SEALED BY A PROFESSIONAL ENGINEER LICENSED IN THE STATE OF NC. SEE TITLE SHEET(S) FOR STRUCTURAL DESIGN CRITERIA.
3. BRIDGING & UPLIFT BRACING SHALL BE INSTALLED PER TRUSS MFR REQUIREMENTS. MFR IS RESPONSIBLE FOR BRACING DESIGN. TEMPORARY BRACING IS THE GC'S RESPONSIBILITY.
4. MINIMUM ROOF DL FOR TRUSS DESIGN SHALL BE 15 PSF.
5. ENGINEERED COMPONENTS SHALL BE DESIGNED FOR WIND PRESSURES SPECIFIED IN NCSBC.
6. ROOF SLOPE = 4:12, UNLESS OTHERWISE NOTED ON PLANS.
7. ELEVATIONS SHOWN ON STRUCTURAL DRAWINGS ARE ABOVE FIRST FINISH FLOOR, REF ELEVATION = +0'-0".
8. SEE LINTEL SCHEDULE FOR MASONRY LINTELS NOT SPECIFIED. SEE ARCH & MECH FOR OPENINGS NOT SHOWN ON STRUCT PLANS.
9. SEE 1/S1 FOR POST SIZES.
10. WHERE PORCH BEAMS ARE BEVELED, ONLY REMOVE ENOUGH MATERIAL TO PROVIDE BEVEL. DO NOT OVERCUT.
11. ALL DIMENSIONS ARE BASED ON DRESSED LUMBER/TIMBER. USE OF ROUGH CUT MATERIAL WILL REQUIRE APPROVAL BY THE ARCHITECT & ADJUSTMENT OF CONNECTOR DIMENSIONS.

PLAN NORTH S&L

PLAN NORTH N&L

2/S1 FRAMING PLAN

SCALE: 1/4" = 1'-0"

POST SCHEDULE	
MARK	SIZE
P1	(2) KING STUDS & (2) JACK STUDS
P2	(4) FULL HEIGHT STUDS

CONNECTOR SCHEDULE	
MARK	HOLDOWN & ANCHOR BOLT
C1	HDU2-SDS2.5 & ⅝" X 6" EMBED

NOTE: SIMPSON CONNECTORS ARE SHOWN. ALTERNATE CONNECTORS WITH EQUAL LOAD CAPACITY & CORROSION RESISTANCE MAY BE USED.

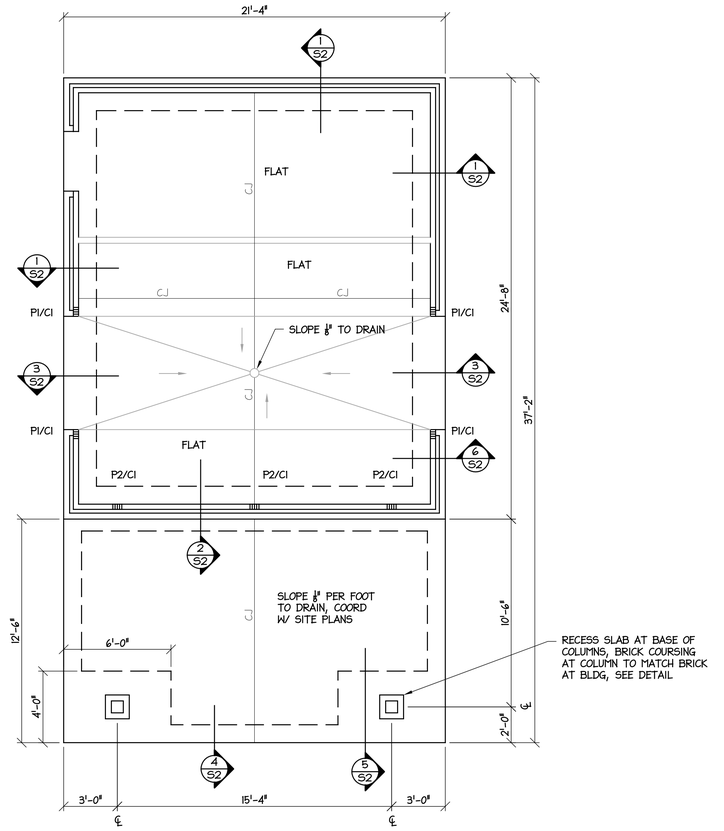

NOTES:

1. MINIMUM COMPRESSIVE STRENGTH OF CONCRETE = 4000 PSI. ADD 5% AIR FOR CONCRETE EXPOSED TO WEATHER.
2. REINFORCEMENT SHALL BE A615, GRADE 60.
3. ELEVATIONS SHOWN ON STRUCTURAL DRAWINGS ARE ABOVE FINISH FLOOR, REF ELEVATION = +0'-0".
4. FLOOR SLAB SHALL BE 4" CONC REINF W/ 6X6 - W1.4 X W1.4 WWR ON 10 MIL VAPOR RETARDER OVER 4" GRANULAR BASE.
5. PROVIDE SMOOTH FINISH FOR INTERIOR SLAB. INTERIOR SLAB WILL BE EXPOSED SEALED CONCRETE, SEE ARCH.
6. PROVIDE BROOMED FINISH ON PORCH SLAB. SEE ARCH FOR SEALANT.
7. SEE ARCH PLANS FOR FLOOR FINISHES & DIMENSIONS NOT SHOWN. SEE ARCH OR SITE PLANS FOR EXTERIOR CONCRETE.
8. CJ DENOTES SLAB CONTROL JOINT. SAW JOINTS MIN ¼ SLAB THICKNESS.
9. PX & CX DENOTE POST & CONNECTOR, SEE SCHEDULES THIS SHEET.
10. PRESUMPTIVE SOIL CAPACITY IS SHOWN ON CODE SUMMARY SHEET. SOIL INVESTIGATION BY OWNER IS PENDING.

PLAN NORTH S&L

PLAN NORTH N&L

1/S1 FOUNDATION PLAN

SCALE: 1/4" = 1'-0"

BID DOCUMENTS

SEAL: NORTH CAROLINA PROFESSIONAL ENGINEER SEAL 37326 MICHAEL D. MOUNTCASTLE
FACILITIES DESIGN
Architects & Engineers
Facilities Management Division
NC Department of Transportation
1 South Wilmington Street 27601
Raleigh, North Carolina
Tel: 919-707-4540 Fax: 919-715-0399

CONSULTANT:

SHEET TITLE: FDN PLAN FRAMING PLAN

PROJECT: Alamance County Vending and Site Improvements
HIGHWAY DIVISION 7
ALAMANCE COUNTY, NORHT CAROLINA

SCO ID NO. 14-11287-01A

REVISIONS

NO.	DATE

DATE: 4/23/15
DRAWN BY: MDM
CHECKED BY: MDM
SHEET NO. S1
OF

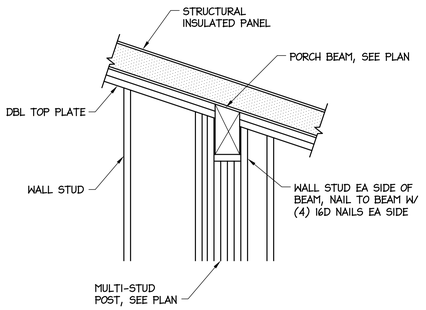

12/S2 PORCH BEAM BRG AT WALL

SCALE: 3/4" = 1'-0"

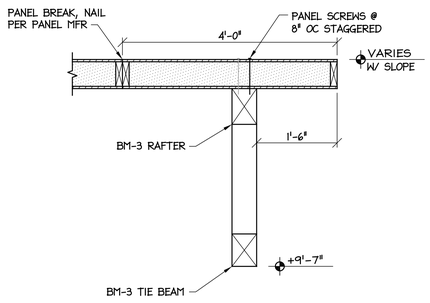

9/S2 GABLE END OF PORCH

SCALE: 3/4" = 1'-0"

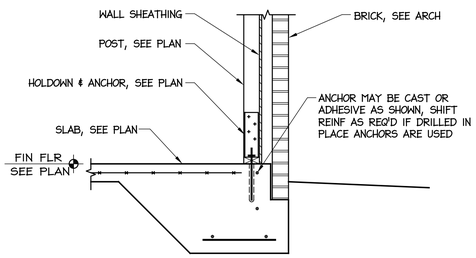

6/S2 POST CONN TO SLAB

SCALE: 3/4" = 1'-0"

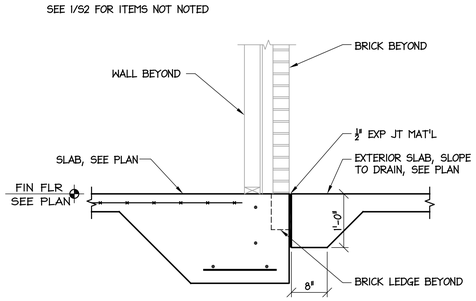

3/S2 FOUNDATION AT DOOR OPENINGS

SCALE: 3/4" = 1'-0"

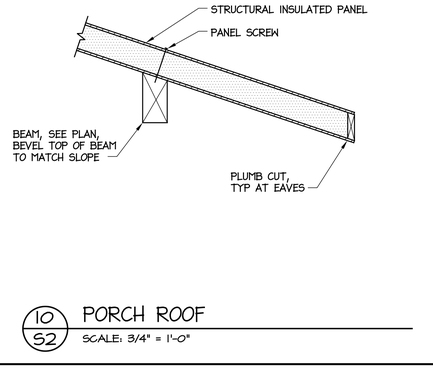

11/S2 GABLE WALL AT PORCH

SCALE: 3/4" = 1'-0"

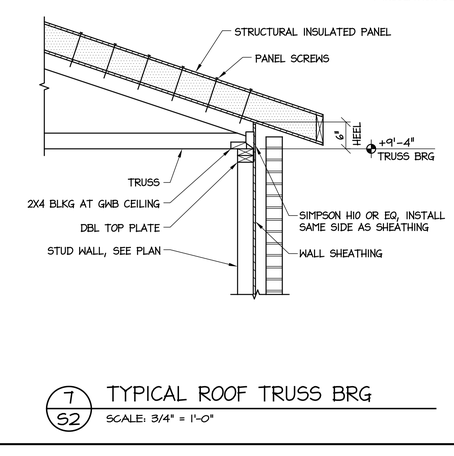

8/S2 GABLE WALL

SCALE: 3/4" = 1'-0"

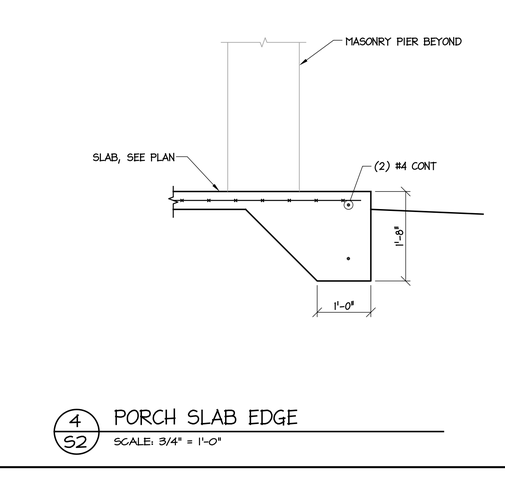

5/S2 PORCH COLUMN FOOTING

SCALE: 3/4" = 1'-0"

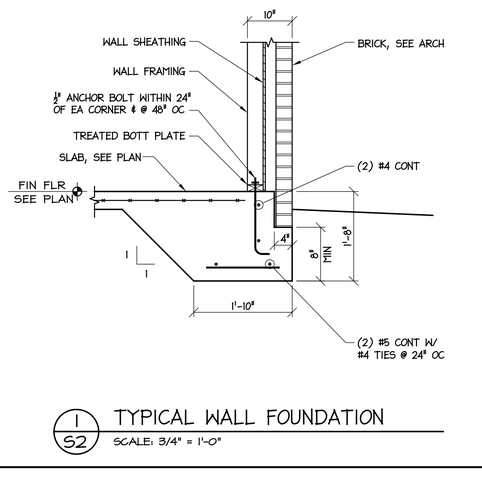

2/S2 FOUNDATION AT PORCH

SCALE: 3/4" = 1'-0"

10/S2 PORCH ROOF

SCALE: 3/4" = 1'-0"

7/S2 TYPICAL ROOF TRUSS BRG

SCALE: 3/4" = 1'-0"

4/S2 PORCH SLAB EDGE

SCALE: 3/4" = 1'-0"

1/S2 TYPICAL WALL FOUNDATION

SCALE: 3/4" = 1'-0"

BID DOCUMENTS

NORTH CAROLINA PROFESSIONAL SEAL 17326 ENGINEER DAVID D. MOUNTCASTLE

FACILITIES DESIGN
Architects & Engineers
Facilities Management Division
NC Department of Transportation
1 South Wilmington Street 27601
Raleigh, North Carolina
Tel: 919-707-4540 Fax: 919-715-0399

CONSULTANT:

SHEET TITLE: DETAILS

PROJECT:
Alamance County Vending and Site Improvements
HIGHWAY DIVISION 7
ALAMANCE COUNTY, NORHT CAROLINA

SCO ID NO. 14-11287-01A

REVISIONS

NO.	DATE

DATE: 4/23/15
DRAWN BY: MDM
CHECKED BY: MDM
SHEET NO.
S2
OF

GENERAL NOTES:

A. GENERAL

1. See specifications for further information. in case of conflict between specifications & drawings, contact architect for resolution.
2. Contractor is responsible for coordination & distribution of all changes in contract documents to all subcontractors.
3. Contractor shall verify all field conditions, elevations, & dimensions prior to construction. Do not scale from plans.
4. Means & methods of construction, including temporary bracing, shoring, & jobsite safety, are the responsibility of the contractor.
5. Structural frame shall be braced until erection is complete & permanent connections & bracing are installed.
6. Provide silt fence or other erosion & sediment control measures as required.
7. If demolition is included in project, sawcut all edges of existing slab and asphalt to remain adjacent to new construction.

B. FOUNDATION

1. Footing excavations shall be reviewed by a geotechnical engineer or construction testing agency approved by the architect or engineer.
2. Footing depths shown are based on geotechnical investigation or presumptive soil properties. Soft or unsuitable soils shall be removed & replaced with suitable fill as specified.
3. Under slabs & footings, remove all topsoil, trash, & organic material, & replace with select fill compacted to 95% maximum density as measured by the Standard Proctor Method (ASTM 698) in 12 inch maximum lifts. The top 12" shall be compacted to 98% maximum density.
4. Contractor is responsible for shoring while excavating near existing structures.

C. CONCRETE

1. Compressive strength of concrete shall be 3000 psi for footings & 4000 psi for walls and slabs, unless otherwise noted.
2. Coordinate floor slopes and depressions with arch and plumbing plans. Maintain specified slab thickness below depressed and sloped areas.
3. If not specified on plans, provide sawed slab control joints in slabs on grade spaced at not more than 48 times the slab thickness.
4. Reinforcing steel shall meet ASTM A 615, Grade 60.
5. Welded wire reinforcement shall conform to ASTM A 185 & A 82.
6. Grout under all columns & beam bearing plates with non–shrink, non–metallic grout which meets ASTM C 1107.
7. Clear distance from face of concrete to main reinforcing:

Suspended slabs and joists:	1"
Grade beams, pedestals, columns, walls:	2"
Footings & walls cast against earth:	3"

8. Provide (2) #4 x 48" diagonal corner bars at center of slab at all corners of floor slab openings.
9. Lap all reinforcement splices 48 bar diameters, UON.
10. Detailing, fabrication, & installation of reinforcing steel shall conform to ACI "Manual of Standard Practice for Detailing Reinforced Concrete Structures" (ACI 315).
11. Workmanship, tolerances, & concrete placement shall conform to "Standard Specifications for Structural Concrete" (ACI 301).
12. Chamfer exposed edges of concrete 3/4", UON.
13. Anchor bolts shall conform to ASTM F 1554, Grade 36.
14. See architectural plans for floor finishes. Coordinate slab curing & sealing compounds with flooring materials.
15. Provide ½" expansion joint material between building and exterior concrete, UON.

D. MASONRY

1. Unless otherwise shown, provide control joints in concrete masonry walls at approx 20' OC, & brick expansion joints at approx 40' OC. Coord w/ architect.
2. Provide galvanized metal ties at 16" OC each way for all brick veneer, unless otherwise shown on architectural plans.

E. STRUCTURAL STEEL

1. Structural steel shall conform to ASTM A 572 except: round pipe shall be A 53, Grade B; square and rectangular tube shall be A 500, Grade B.
2. Steel construction shall conform to "Manual of Steel Construction, Allowable Stress Design," Ninth Edition.
3. Connection bolts shall be 3/4" ASTM A 325, UON. If connection loads not specified, design for loads shown in AISC beam span tables. Assume bearing type connections with threads included in the shear plane.
4. Cutting of structural members shall have all re–entrant corners shaped & notch free to a minimum 1/2" radius.
5. Unless otherwise designed by fabricator, weld material shall be E70XX.
6. See architectural & other drawings for miscellaneous steel not shown on structural plans.
7. Provide cap plate top of all tube & pipe columns, UON.
8. All field welds shall be cleaned & painted with a rust inhibiting paint compatible with the shop coat.
9. Beams & lintels shall bear 8" minimum on masonry, UON.

F. WOOD

1. Structural lumber shall be SPF #2 or better, UON. Wood for fabricated trusses shall be SYP #2 or better, except that webs may be SYP #3.
2. Wood in contact with concrete or masonry shall be treated.
3. Straps, ties, hangers, & other connection hardware shall be galvanized.
4. Connections not otherwise detailed shall be in accordance with Tables 2304.9.1.1 thru 2304.9.1.6 of the NC State Building Code.
5. Trusses shall be designed for the full dead & live loads specified in the contract. Submit truss shop drawings bearing the seal of a registered professional engineer licensed in the state of NC. Show truss layout & truss designs including required bracing. Bracing design is the truss designer's responsibility.
6. Contractor shall install both temporary and permanent bracing. Note that permanent bracing is often shown on individual truss calculation pages instead of the truss layout sheet, especially where there is no hard ceiling applied to truss.
7. Additional bracing may be required by engineer of record as indicated on plans for support of gable walls or other items.
8. Install blocking in walls & ceiling where required for partitions, fixtures, & other misc items. Coordinate with all trades.
9. Add ½" plywood spacers at multi–ply wood beams & headers to match wall thickness.
10. All LVL beams & PSL columns shall meet the following:

	E (psi)	Fb (psi)	Fv (psi)	Fc (psi)
LVL	1,900,000	2600	285	n/a
PSL	1,800,000	2400	190	2500

11. Attach multiple LVL beams together with (2) Simpson SDW (or equal) screws @ 16" OC along length of beam.
12. Countersink bolted beam connections where required to clear architectural finishes.

MASONRY LINTEL SCHEDULE

OPENING	STEEL LINTEL	MIN BEARING
0'-0" TO 1'-4"	PLATE 3/8 X 3-1/2	8"
1'-4" TO 4'-0"	L 3-1/2 X 3 1/2 X 5/16	8"
4'-0" TO 6'-0"	L 4 X 3 1/2 X 5/16 LLV	8"
6'-0" TO 8'-0"	L 5 X 3 1/2 X 5/16 LLV	8"
SIZES ABOVE ARE PER 4" OF WALL THICKNESS		

1. COORDINATE LINTEL SIZES & LOCATIONS W/ ARCHITECTURAL & MECHANICAL PLANS. ALL MECHANICAL OPENINGS SHALL BE PROVIDED W/ LINTELS AS SPECIFIED HEREIN.
2. SEE ARCHITECTURAL PLANS FOR REQUIRED CLOSURE PLATES UNDER STEEL LINTELS.
3. THIS SCHEDULE APPLIES TO LINTELS NOT SPECIFIED ON PLANS. LINTEL SIZES SHOWN ON PLANS TAKE PRECEDENCE OVER SIZES SPECIFIED ABOVE.

7/S3 PANEL CONN AT RIDGE

SCALE: 3/4" = 1'-0"

1. ALL MATERIAL ¼" STEEL PLATE.
2. VERIFY SIZES W/ TIMBERS.
3. PRIME & PAINT BLACK, SEE ARCH.
4. PAINT EXPOSED BOLTS TO MATCH.

5/S3 CONNECTION BRACKET

SCALE: 1" = 1'-0"

1. ALL MATERIAL ¼" STEEL PLATE.
2. VERIFY SIZES W/ TIMBERS.
3. PRIME & PAINT BLACK, SEE ARCH.
4. PAINT EXPOSED BOLTS TO MATCH.

4/S3 CONNECTION BRACKET

SCALE: 1" = 1'-0"

3/S3 LINTEL AT BRICK ARCH

SCALE: 3/4" = 1'-0"

2/S3 RIDGE CONN TO TRUSS

SCALE: 3/4" = 1'-0"

1/S3 BEAM/TRUSS CONN TO POST

SCALE: 3/4" = 1'-0"

BID DOCUMENTS

SEAL: NORTH CAROLINA PROFESSIONAL ENGINEER 17326 MICHAEL D. MOUNTCASTLE

FACILITIES DESIGN
Architects & Engineers
Facilities Management Division
NC Department of Transportation
1 South Wilmington Street
Raleigh, North Carolina 27601
Tel: 919–707–4540 Fax: 919–715–0399

CONSULTANT:

SHEET TITLE:
DETAILS
GENERAL NOTES

PROJECT:
Alamance County Vending and Site Improvements
HIGHWAY DIVISION 7
ALAMANCE COUNTY, NORHT CAROLINA

SCO ID NO.
14–11287–01A

REVISIONS NO.	DATE

DATE: 4/23/15
DRAWN BY: MDM
CHECKED BY: MDM
SHEET NO.
S3
OF

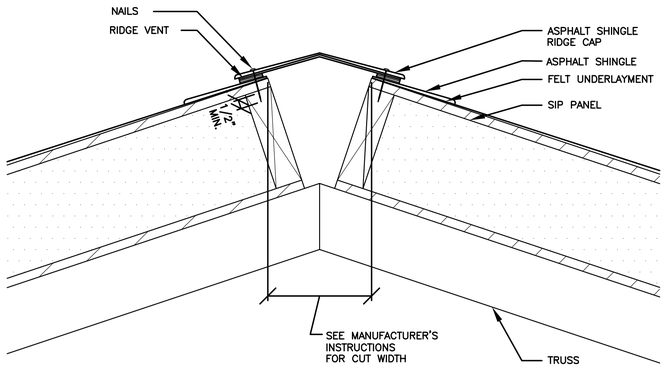

4 / A1.2 RIDGE VENT DETAIL
SCALE: 3" = 1'-0"

LEGEND

SYMBOL	DESCRIPTION
	48" STANDARD STRIP LIGHT WITH WIRE GUARD
○	6" LED CAN LIGHT
⊙	WAREHOUSE SHADE BARN LIGHT
⊠	EXHAUST AIR GRILL

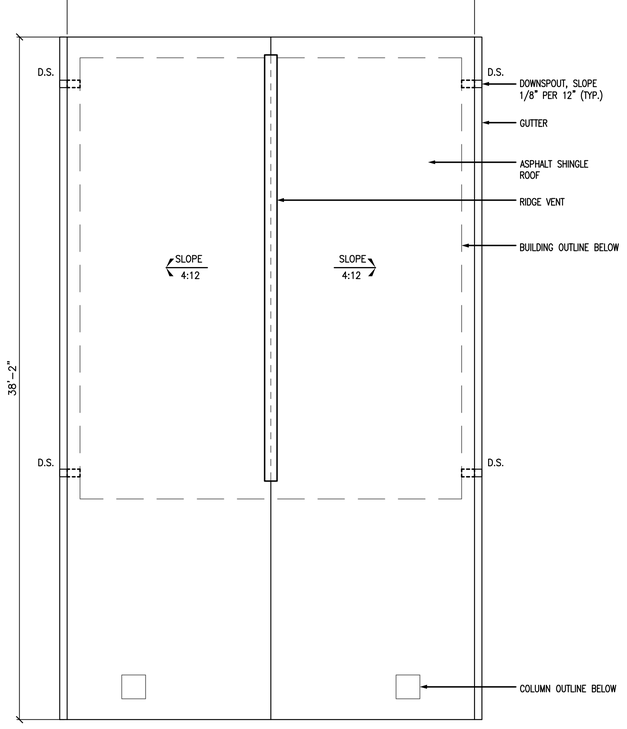

3 / A1.1 ROOF PLAN
SCALE: 1/4" = 1'-0"
NORTH SBL NORTH NBL

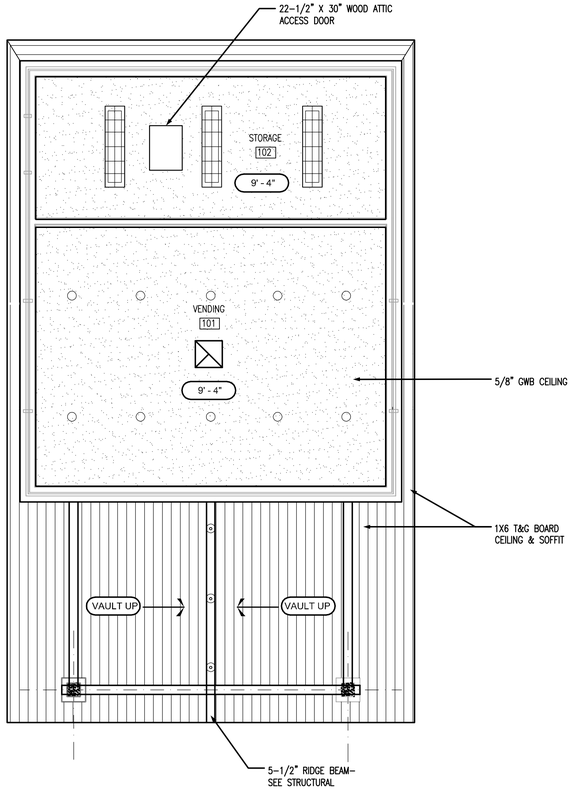

2 / A1.1 REFLECTED CEILING PLAN
SCALE: 1/4" = 1'-0"
NORTH SBL NORTH NBL

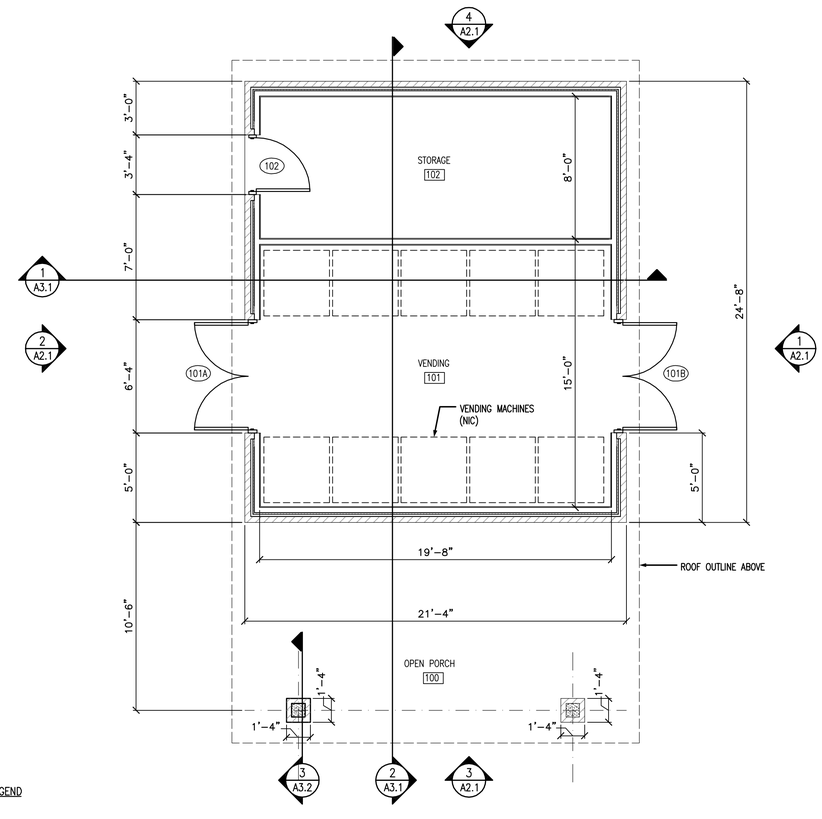

WALL LEGEND

EXTERIOR WALL- 4" WOOD STUDS @ 16" O.C. WITH 1" RIGID INSULATION & 4" EXTERIOR BRICK VENEER

INTERIOR WALL- 4" WOOD STUDS @ 16" O.C.

1 / A1.1 FLOOR PLAN
SCALE: 1/4" = 1'-0"
NORTH SBL NORTH NBL

GENERAL NOTES:

1. CONTRACTOR SHALL CAULK ALL INTERIOR FLOOR CONTROL AND EXPANSION JOINTS AT FLOORS BEFORE SEALING. REFERENCE STRUCTURAL DRAWINGS FOR LOCATION.
2. CONTRACTOR SHALL PROVIDE GYPSUM BOARD CONTROL JOINTS AS INDICATED IN MANUFACTURER'S INSTALLATION INSTRUCTIONS.
3. CONTRACTOR SHALL VERIFY ALL DIMENSIONS PRIOR TO CONSTRUCTION AND SHALL NOTIFY ARCHITECT OF ANY DISCREPANCIES. DO NOT SCALE DRAWINGS.
4. ALL WALL DIMENSIONS ARE TO THE FACE OF STUD (F.O.S.), UNLESS OTHERWISE NOTED OR DETAILED.
5. ALL EXTERIOR WALL STUD FRAMING IS 2x4 @ 16" O.C..
6. PROVIDE ACOUSTICAL SOUND BATTS IN ALL INTERIOR STUD WALLS.
7. REFER TO DETAIL DWGS FOR ADDITIONAL DIMENSIONS AND WALL TYPE DESIGNATIONS.

BID DOCUMENTS

SEAL:
LISA LARKIN KEEL
REGISTERED ARCHITECT
6195
NORTH CAROLINA
RALEIGH, N.C.
SEAL NOT VALID UNLESS SIGNED AND DATED

DESIGNED BY:
FACILITIES DESIGN
ARCHITECTS & ENGINEERS
FACILITIES MANAGEMENT DIVISION, NCDOT
1 SOUTH WILMINGTON STREET
RALEIGH, NORTH CAROLINA 27601
PH:919/707-4640 FAX:919/715-0369

CONSULTANT:

DRAWING TITLE / DISCRIPTION:
FLOOR PLAN,
REFLECTED CEILING PLAN,
ROOF PLAN

PROJECT TITLE:
I-40/I-85 ALAMANCE COUNTY
REST AREA VENDING BUILDINGS
MILE MARKER 139, BURLINGTON,
ALAMANCE COUNTY, NORTH CAROLINA

SCO ID NO.	14-11287-01A
TIP PROJ. NO.	-
WBS NO.	3707.3.23
FEDERAL ID NO.	-

ASSET NUMBER:
CO.# SITE.# BLDG.#
01 - 013 - X

REVISIONS
NO. DATE

DATE ISSUED: 4-23-15
DRAWN BY: AS
CHECKED BY: LLK
SHEET NO.

A1.1

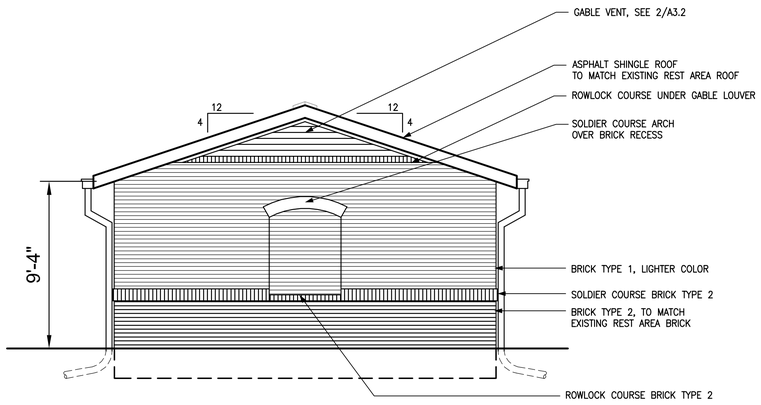

4 A2.1 EAST ELEVATION
SCALE: 1/4" = 1'-0"

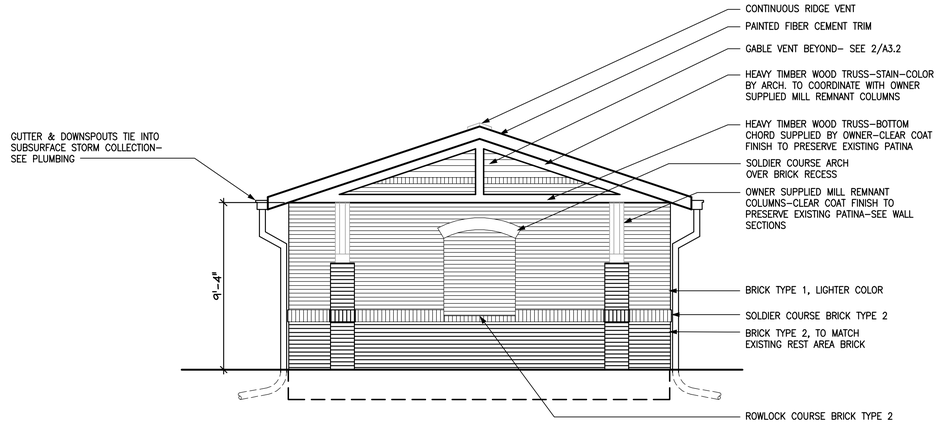

3 A2.1 WEST ELEVATION
SCALE: 1/4" = 1'-0"

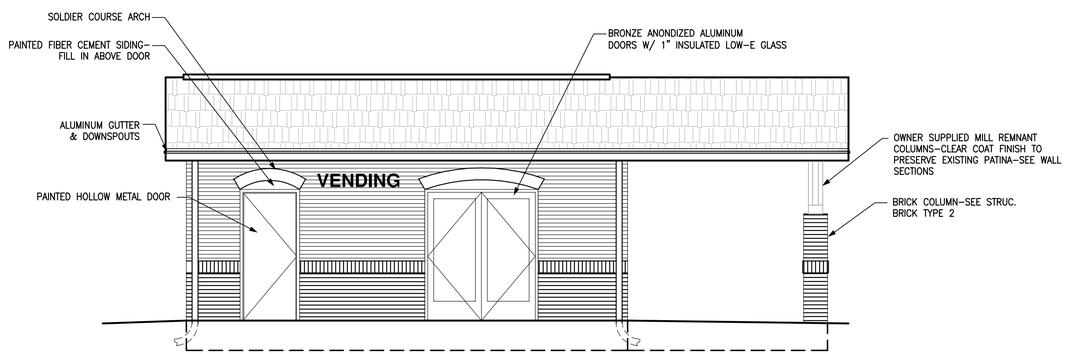

2 A2.1 NORTH ELEVATION
SCALE: 1/4" = 1'-0"

SIGNAGE NOTES:

1. SIGNAGE SHALL COMPLY WITH ICC A117.1-2009, CH. 7.
2. INDIVIDUAL METAL LETTERS :
   1/4" THICK MILLED BRUSHED ALUMINUM PLATE, DARK BRONZE ANODIZED ALUMINUM.
   HELVETICA BOLD FONT, 10" TEXT HEIGHT.
3. MOUNT WITH 2-1/2" SPACING BETWEEN LETTERS.
4. SEE PROJECT SPECIFICATIONS FOR ADDITIONAL INFORMATION.
5. MOUNT WITH BOTTOM OF LETTERS 7'-6" AFF SO OPENED DOORS DO NOT OBSTRUCT.

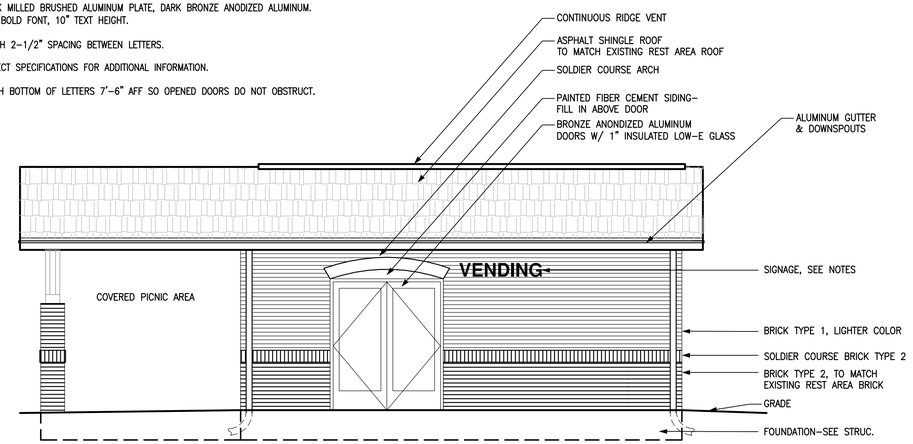

1 A2.1 SOUTH ELEVATION
SCALE: 1/4" = 1'-0"

BID DOCUMENTS

SEAL:
LISA LARKIN KEEL
REGISTERED ARCHITECT
6195
Electronically signed by: Lisa Keel
NORTH CAROLINA
RALEIGH, N.C.
SEAL NOT VALID UNLESS SIGNED AND DATED

DESIGNED BY:
FACILITIES DESIGN
ARCHITECTS & ENGINEERS
FACILITIES MANAGEMENT DIVISION, NCDOT
1 SOUTH WILMINGTON STREET
RALEIGH, NORTH CAROLINA 27601
PH:(919)707-4840 FAX:(919)715-0369

CONSULTANT:

DRAWING TITLE / DISCRIPTION:
EXTERIOR ELEVATIONS

PROJECT TITLE:
I-40/I-85 ALAMANCE COUNTY
REST AREA VENDING BUILDINGS
MILE MARKER 139, BURLINGTON,
ALAMANCE COUNTY, NORTH CAROLINA

SCO ID NO.	14-11287-01A
TIP PROJ. NO.	-
WBS NO.	3707.3.23
FEDERAL ID NO.	-

ASSET NUMBER:
CO.# SITE.# BLDG.#
01 - 013 - X

REVISIONS
NO. DATE

DATE ISSUED: 4-23-15
DRAWN BY: AS
CHECKED BY: LLK

SHEET NO.
A2.1

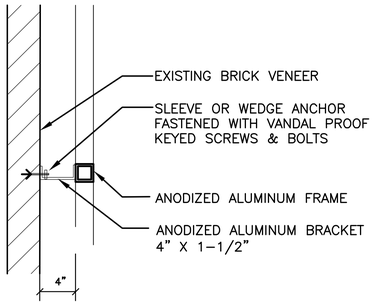

4 / A2.2 DETAIL–ALUM. GRID ATTACHMENT
SCALE: 1 1/2" = 1'–0"

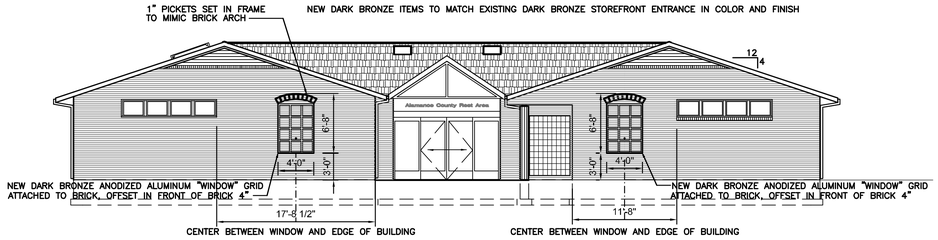

3 / A2.2 EXISTING REST AREA ELEVATION–TO SHOW LOCATION OF NEW ALUMINUM "FAUX" WINDOWS
SCALE: 1/8" = 1'–0" (2) FAX WINDOWS AT EACH EXISTING REST AREA

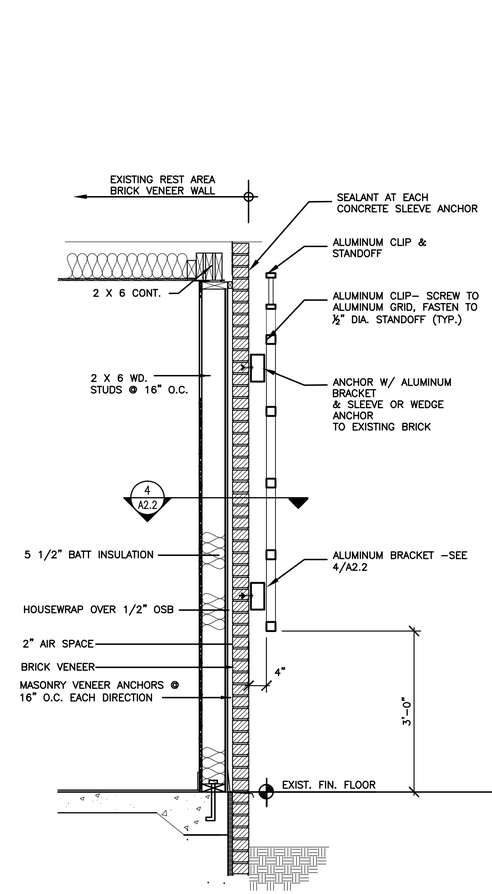

2 / A2.2 ALUMINUM GRID ("FAUX" WINDOW) ATTACHMENT DETAIL
SCALE: 3/4" = 1'–0"

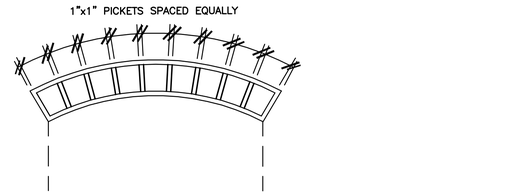

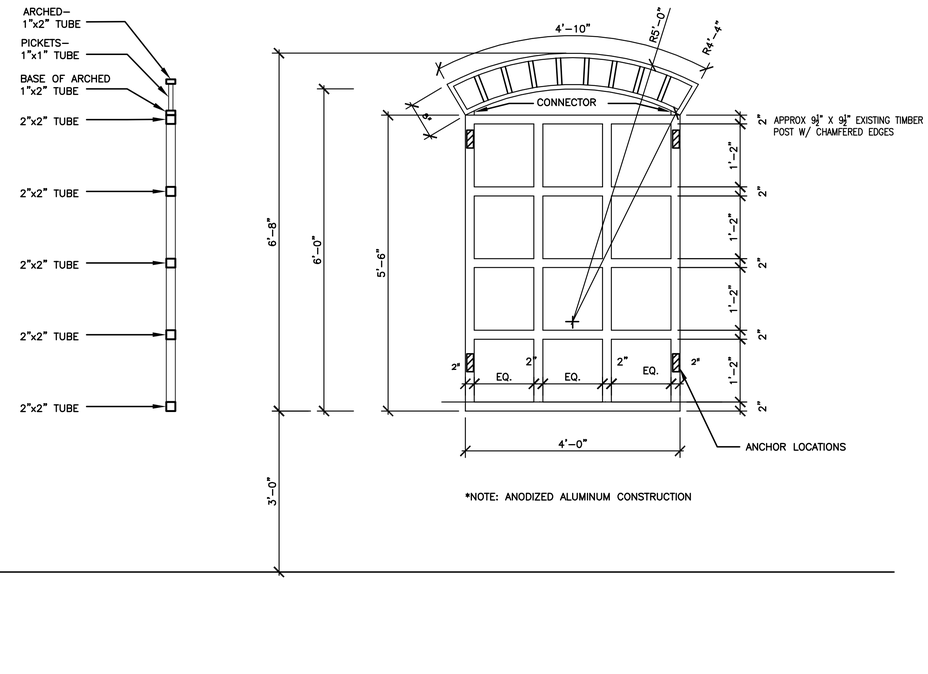

*NOTE: ANODIZED ALUMINUM CONSTRUCTION

1 / A2.2 "FAUX" WINDOW ELEVATION & DETAIL
SCALE: 3/4" = 1'–0"

BID DOCUMENTS

LISA LARKIN KEEL REGISTERED ARCHITECT 6195 DocuSigned by: NORTH CAROLINA RALEIGH, N.C.

SEAL:

SEAL NOT VALID UNLESS SIGNED AND DATED

DESIGNED BY:

FACILITIES DESIGN
ARCHITECTS & ENGINEERS
FACILITIES MANAGEMENT DIVISION, NCDOT
1 SOUTH WILMINGTON STREET
RALEIGH, NORTH CAROLINA 27601
PH:919/707-4640 FAX:919/715-0369

CONSULTANT:

DRAWING TITLE / DISCRIPTION:
EXTERIOR ELEVATIONS & DETAILS

PROJECT TITLE:
I-40/I-85 ALAMANCE COUNTY
REST AREA VENDING BUILDINGS
MILE MARKER 139, BURLINGTON, ALAMANCE COUNTY, NORTH CAROLINA

SCO ID NO.	14-11287-01A
TIP PROJ. NO.	–
WBS NO.	3707.3.23
FEDERAL ID NO.	–

ASSET NUMBER: CO.# SITE.# BLDG.#
01 ▪ 013 ▪ X

REVISIONS

NO.	DATE

DATE ISSUED: 4-23-15
DRAWN BY: AS
CHECKED BY: LLK

SHEET NO.
A2.2

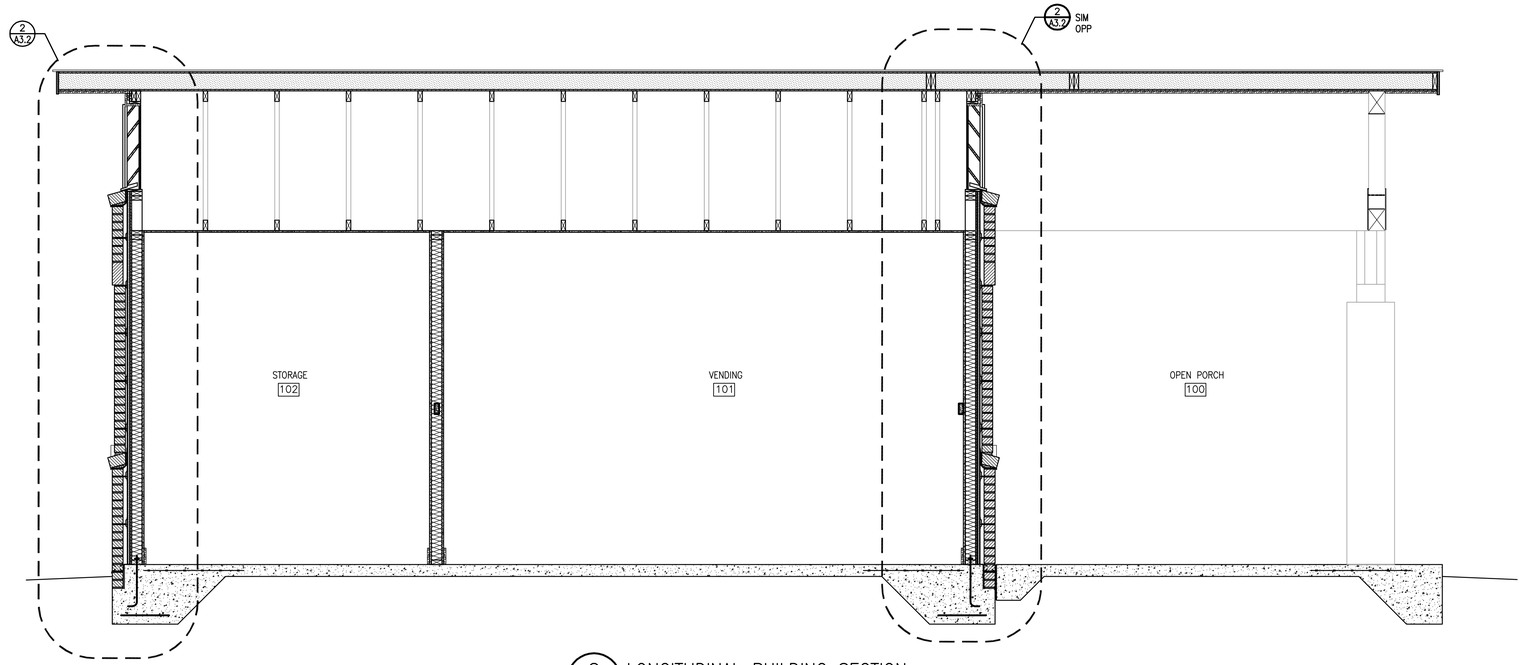

2 / A3.1 LONGITUDINAL BUILDING SECTION
SCALE: 1/2" = 1'-0"

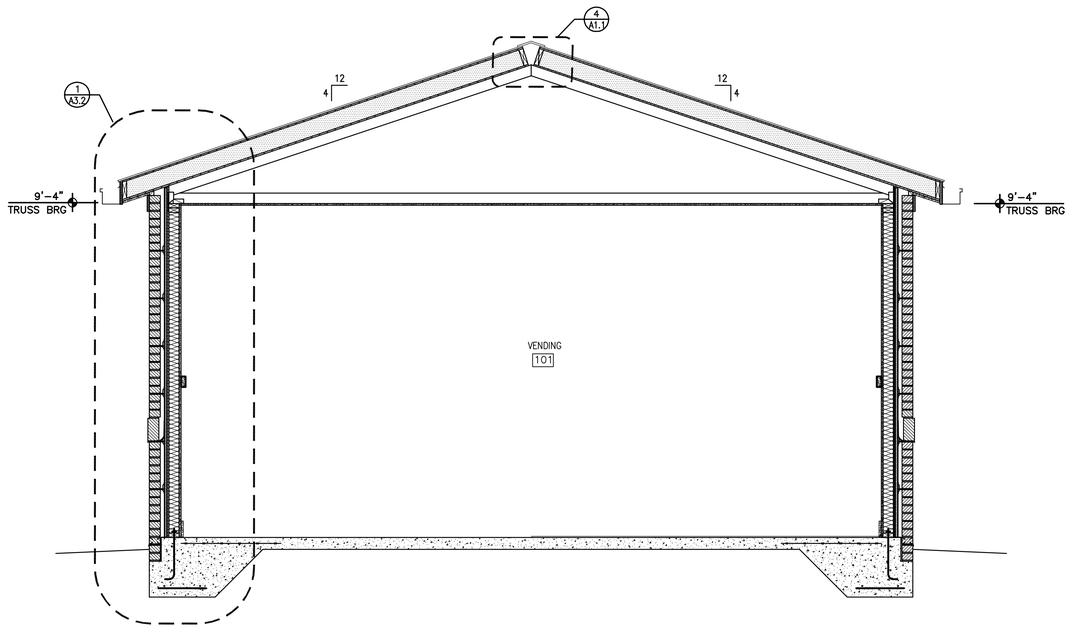

1 / A3.1 LATERAL BUILDING SECTION
SCALE: 1/2 = 1'-0"

BID DOCUMENTS

LISA LARKIN KEEL
REGISTERED ARCHITECT
6195
Assigned by:
NORTH CAROLINA
RALEIGH, N.C.
SEAL:
SEAL NOT VALID UNLESS SIGNED AND DATED

DESIGNED BY:
FACILITIES DESIGN
ARCHITECTS & ENGINEERS
FACILITIES MANAGEMENT DIVISION, NCDOT
1 SOUTH WILMINGTON STREET
RALEIGH, NORTH CAROLINA 27601
PH:919/707-4640 FAX:919/715-0369

CONSULTANT:

DRAWING TITLE / DISCRIPTION:
BUILDING SECTIONS

PROJECT TITLE:
I-40/I-85 ALAMANCE COUNTY
REST AREA VENDING BUILDINGS
MILE MARKER 139, BURLINGTON,
ALAMANCE COUNTY, NORTH CAROLINA

SCO ID NO.	14-11287-01A
TIP PROJ. NO.	-
WBS NO.	3707.3.23
FEDERAL ID NO.	-

ASSET NUMBER:
CO.# SITE.# BLDG.#
01 - 013 - X

REVISIONS
NO. | DATE

DATE ISSUED: 4-23-15
DRAWN BY: AS
CHECKED BY: LLK

SHEET NO.
A3.1

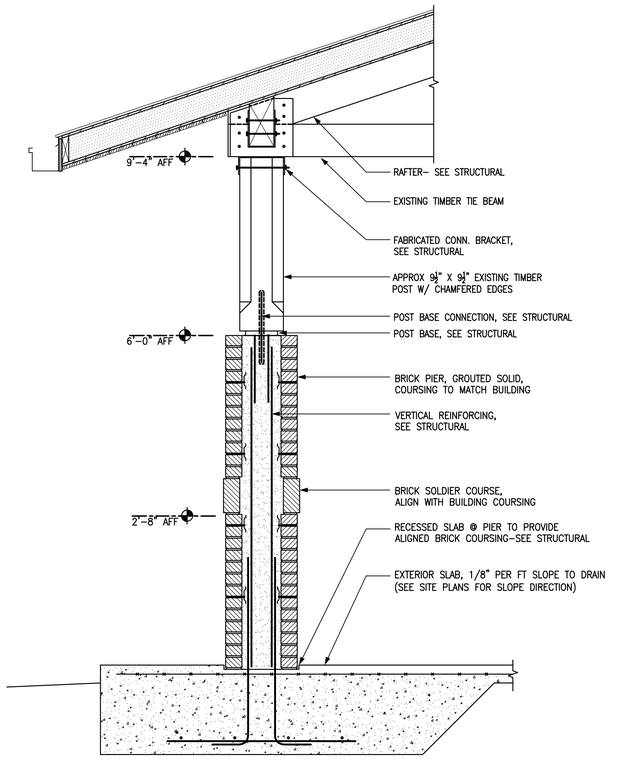

3 A3.2 SECTION @ PORCH COLUMN
SCALE: 3/4" = 1'-0"

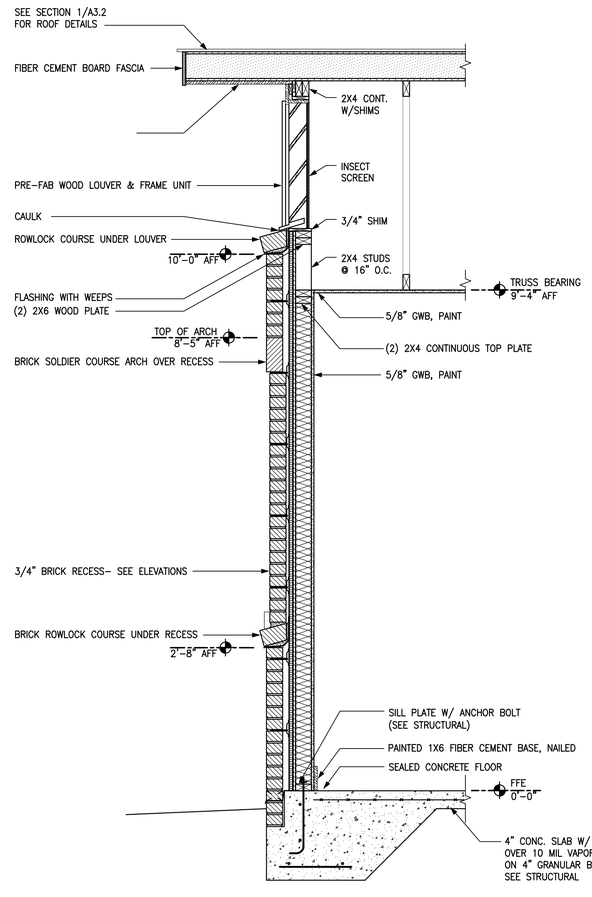

2 A3.2 WALL SECTION
SCALE: 3/4" = 1'-0"

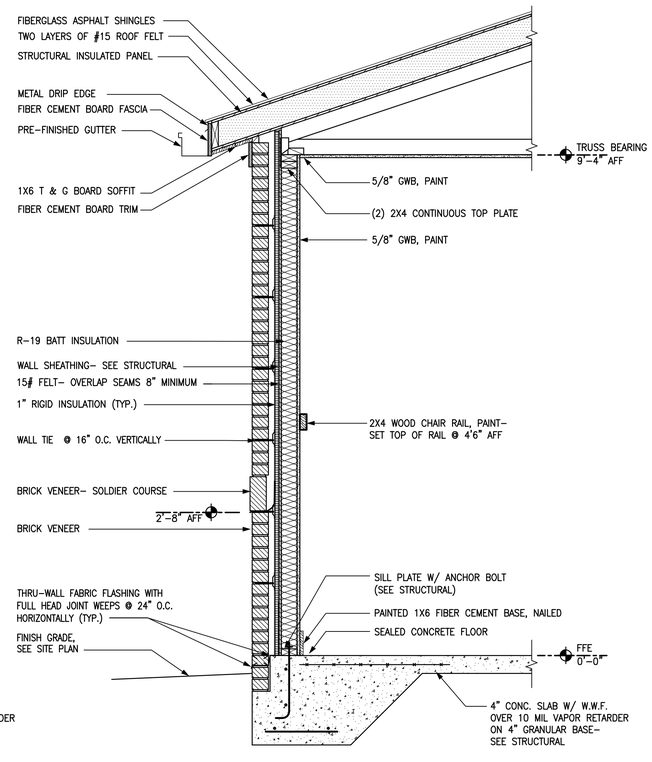

1 A3.2 WALL SECTION
SCALE: 3/4" = 1'-0"

BID DOCUMENTS

SEAL:
SEAL NOT VALID UNLESS SIGNED AND DATED

DESIGNED BY:
FACILITIES DESIGN
ARCHITECTS & ENGINEERS
FACILITIES MANAGEMENT DIVISION, NCDOT
1 SOUTH WILMINGTON STREET
RALEIGH, NORTH CAROLINA 27601
PH:919/707-4440 FAX:919/715-0369

CONSULTANT:

DRAWING TITLE / DISCRIPTION:
WALL SECTIONS & DETAILS

PROJECT TITLE:
I-40/I-85 ALAMANCE COUNTY
REST AREA VENDING BUILDINGS
MILE MARKER 139, BURLINGTON, ALAMANCE COUNTY, NORTH CAROLINA

SCO ID NO.	14-11287-01A
TIP PROJ. NO.	-
WBS NO.	3707.3.23
FEDERAL ID NO.	-

ASSET NUMBER:
CO.# SITE.# BLDG.#
01 ▪ 013 ▪ X

REVISIONS
NO. | DATE

DATE ISSUED: 4-23-15
DRAWN BY: AS
CHECKED BY: LK

SHEET NO.
A3.2

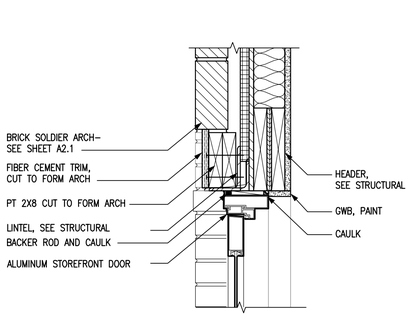

1 A4.1 HEAD– DOORS 101A & 101B
SCALE: 1–1/2" = 1'–0"

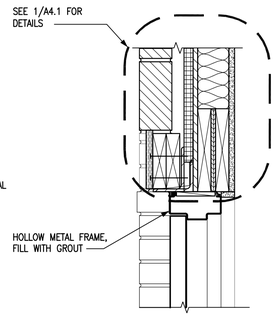

2 A4.1 HEAD– DOOR 102
SCALE: 1–1/2" = 1'–0"

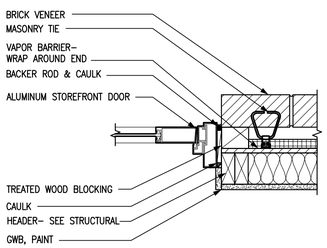

3 A4.1 JAMB– DOORS 101A & 101B
SCALE: 1–1/2"" = 1'–0"

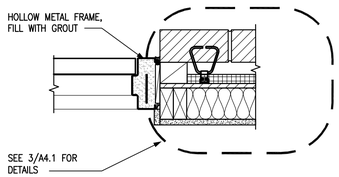

4 A4.1 JAMB– DOOR 102
SCALE: 1–1/2"" = 1'–0"

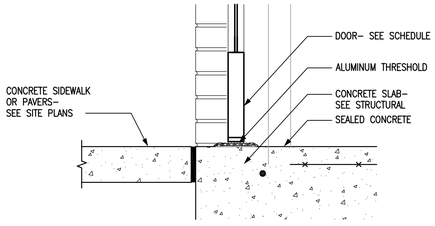

5 A4.1 SILL– ALL DOORS
SCALE: 1–1/2"" = 1'–0"

NOTES:
1. SPECIFIED DIMENSIONS ARE FOR DOOR ROUGH OPENING.
2. SEE THIS SHEET FOR TYP. DOOR FRAMING DETAILS.

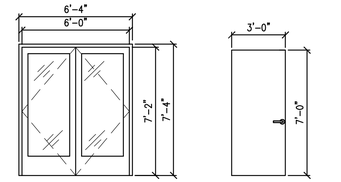

101A 101B

SEE FOLLOWING TYPICAL DOOR FRAMING DETAILS:
1/A4.1– HEAD,
3/A4.1– JAMB,
5/A4.1– SILL

102

SEE FOLLOWING TYPICAL DOOR FRAMING DETAILS:
2/A4.1– HEAD,
4/A4.1– JAMB,
5/A4.1– SILL

6 A4.1 DOOR ELEVATIONS
SCALE: 1/4" = 1'–0"

ROOM FINISH SCHEDULE:

ROOM NO.	ROOM NAME	FLOOR		WALLS				CEILING		
		MATL	BASE	NORTH WALL	SOUTH WALL	EAST WALL	WEST WALL	MATL	HEIGHT	REMARKS
100	OPEN PORCH	CONC	N/A	–	–	–	–	TGB	VARIES*	* VAULTED– SEE WALL SECTIONS
101	VENDING	SC	FC	PGWB	PGWB	PGWB	PGWB	PGWB	9'–4"	
102	STORAGE	SC	FC	PGWB	PGWB	PGWB	PGWB	PGWB	9'–4"	

FINISH LEGEND:

FLOOR FINISH	BASE FINISH	WALL FINISH	CEILING FINISH
CONC CONCRETE, BROOMED FINISH SC SEALED CONCRETE	FC FIBER CEMENT	PGWB PAINTED GYPSUM WALL BOARD	PGWB PAINTED GYPSUM WALL BOARD TGB TONGUE & GROOVE BOARD

DOOR & FRAME SCHEDULE

DOOR				FRAME		HARDWARE GROUP (SEE NOTE 1)	HEAD	JAMB	SILL	REMARKS
DOOR NO.	SIZE	MAT.	FINISH	MAT.	FINISH		SEE SHEET A5.1			
101A	(2) 3'–0"x7'–0"x1 3/4"	ALUM./ GLASS	DARK BRONZE	ALUM.	CLEAR ANOD.	HW–1	1	3	5	
101B	(2) 3'–0"x7'–0"x1 3/4"	ALUM./ GLASS	DARK BRONZE	ALUM.	CLEAR ANOD.	HW–1	1	3	5	
102	3'–0"x7'–0"x1 3/4"	HM	PAINT	H.M.	PAINT	HW–2	2	4	5	

BID DOCUMENTS

SEAL:
LISA LARKIN KEEL
REGISTERED ARCHITECT
6195
NORTH CAROLINA
RALEIGH, N.C.
SEAL NOT VALID UNLESS SIGNED AND DATED

DESIGNED BY:
FACILITIES DESIGN
ARCHITECTS & ENGINEERS
FACILITIES MANAGEMENT DIVISION, NCDOT
1 SOUTH WILMINGTON STREET
RALEIGH, NORTH CAROLINA 27601
PH:(919)707-4640 FAX:(919)715-0369

CONSULTANT:

DRAWING TITLE / DISCRIPTION:
WALL SECTIONS & DETAILS

PROJECT TITLE:
I-40/I-85 ALAMANCE COUNTY
REST AREA VENDING BUILDINGS
MILE MARKER 139, BURLINGTON,
ALAMANCE COUNTY, NORTH CAROLINA

SCO ID NO.	14–11287–01A
TIP PROJ. NO.	–
WBS NO.	3707.3.23
FEDERAL ID NO.	–

ASSET NUMBER:
CO.# SITE.# BLDG.#
01 ▪ 013 ▪ X

REVISIONS
NO. | DATE

DATE ISSUED: 4–23–15
DRAWN BY: AS
CHECKED BY: LLK

SHEET NO.
A4.1

GENERAL NOTES – PLUMBING

1. PREPLAN ALL WORK PRIOR TO ORDERING, PURCHASING, OR FABRICATING ANY PART OF THE WORK DESCRIBED BY THIS DRAWING.

2. IMMEDIATELY NOTIFY THE ENGINEER OF ANY CONFLICTS WITH EXISTING FIELD CONDITIONS OR THE WORK OF OTHER TRADES.

3. RESOLVE ALL CONFLICTS PRIOR TO INCURRING ANY MATERIAL OR LABOR EXPENSES.

4. COMPLY WITH THE MANUFACTURER'S TECHNICAL INSTRUCTIONS WHEN INSTALLING PLUMBING FIXTURES, MATERIALS, AND DEVICES.

5. LOCATE FIXTURES AND EQUIPMENT GENERALLY AS SHOWN ON THE PLANS; HOWEVER, COORDINATE LOCATIONS WITH ACTUAL FIELD CONDITIONS TO PRESERVE ALL CODE-REQUIRED AND MANUFACTURER – REQUESTED SERVICE CLEARANCES.

6. COORDINATE ROUTING OF ALL PIPING WITH BUILDING STRUCTURE AND WITH THE WORK OF OTHER TRADES. OFFSET VENT PIPING AROUND BEAMS AND JOISTS AS NECESSARY.

7. AT EXTERIOR WALL, INSTALL WATER PIPING ON HEATED SIDE OF WALL INSULATION.

8. PROVIDE WATER HAMMER ARRESTORS AT THE END OF EACH COLD WATER BRANCH RISER. SIZE ARRESTOR APPROPRIATELY.

9. PROVIDE CONCRETE RING FOR ALL EXTERIOR CLEAN-OUTS.

10. REVIEW SITE PLAN FOR UTILITIES AND ORIENTATION PRIOR TO START OF WORK.

11. G.C. TO PROVIDE ROOF PENETRATIONS.

PLUMBING FIXTURE SCHEDULE *

MARK	DESCRIPTION	ALTERNATE MANUFACTURER/MODEL	ALTERNATE MANUFACTURER/MODEL
FD	FLOOR DRAIN ZURN ZN-415 WITH DEEP SEAL P-TRAP, 5" X 5" TYPE "S" SQUARE STRAINER AND 3" CONNECTION, VANDAL-PROOF TOP.	JOSAM #30000-S.	JAY R. SMITH #2005-B.
VB	VALVE BOX OATEY GALVANIZED METAL VALVE BOX #38686 WITH 1/4" TURN BRASS BALL VALVE.	IPS GUY GRAY #MIB1AB	LSP # OB-504
FPHB	FREEZE-PROOF HOSEBIBB ZURN Z-1320-C, 3/4" NON FREEZE WALL HYDRANT WITH VANDAL RESISTANT VACUUM BREAKER. ENCASED WITH KEY LOCK.	JAY R. SMITH #5509QT.	WATTS HY-725.
TPV	TRAP PRIMER VALVE PPP INC. MODEL# PR-500, 1/2" INLET, 1/2" OUTLET	JOSAM #88300.	WATTS #A200.

(VERIFY ALL EQUIPMENT REQUIREMENTS PRIOR TO ROUGH-IN)

PIPE SIZING SCHEDULE

FIXTURE TYPE	DRAIN	VENT	CW	HW
(FPHB) FREEZE PROOF HOSE BIBB	–	–	1/2"	–
(VB) VALVE BOX	–	–	1/2"*	–
(FD) FLOOR DRAIN	3"	1 1/2"	–	–

* PROVIDE BACKFLOW PREVENTER PER NCSBC-PLUMBING SECT. 608.3, AND ASSE 1024 (WATTS SERIES 7 OR EQUAL) OR ASSE 1022 (WATTS SERIES SD-3 OR EQUAL) WHERE REQUIRED.

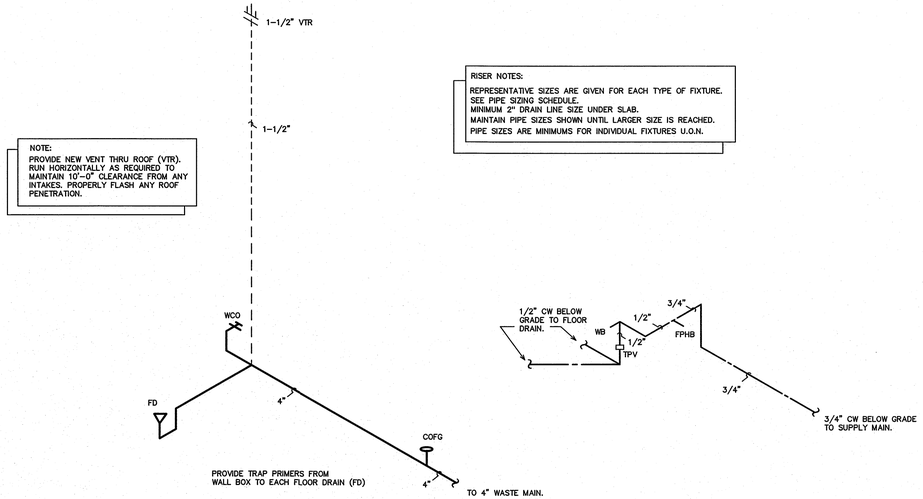

2 P1 PLUMBING RISERS
SCALE: NOT TO SCALE

SYMBOL LEGEND – PLUMBING

SYMBOL	DESCRIPTION
	WASTE PIPING (W)
	VENT PIPING (V)
	COLD WATER PIPING (CW)
	HOT WATER PIPING (HW)
COFF	CLEANOUT FINISH FLOOR
WCO/HCO	WALL/HORIZONTAL CLEANOUT
COFG	CLEANOUT FINISH GRADE-PROVIDE FLUSH CONCRETE COLLAR AND BRONZE COVER
	FREEZE PROOF HOSE BIBB (FPHB)
	SHUT-OFF VALVE
	VENT THRU ROOF (VTR)
A.F.F.	ABOVE FINISHED FLOOR

NOTE:
SEE SITE UTILITY PLANS FOR SCOPE OF PLUMBING SITE WORK. THE ELECTRICAL CONTRACTOR SHALL PROVIDE ALL PIPING, ETC AS REQUIRED.
THE FLOORPLANS SHOWN REPRESENT BUILDINGS ON BOTH THE NORTH BOUND AND SOUTH BOUND LANES.

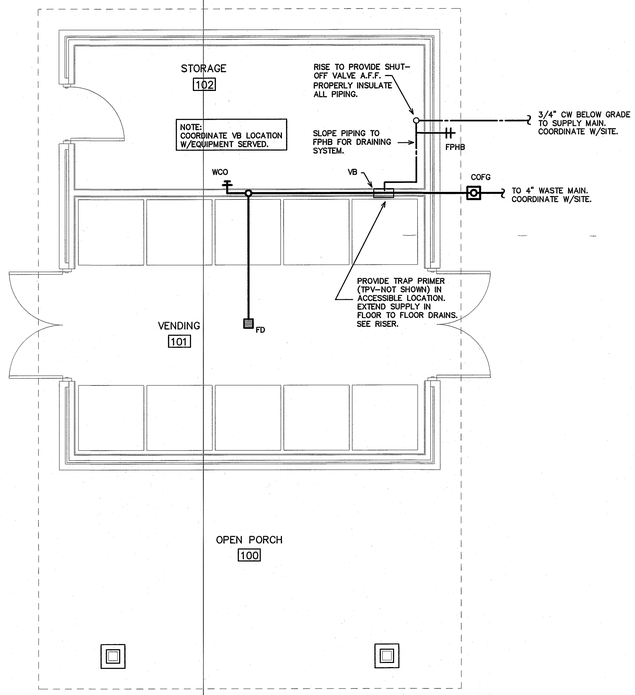

1 P1 PLUMBING PLAN
SCALE: 1/4" = 1'-0"

CONSTRUCTION DOCUMENTS

SEAL
NORTH CAROLINA PROFESSIONAL SEAL 22038 ENGINEER JAMIE E. BURKE
Do Not Reproduce

DESIGNED BY:
FACILITIES DESIGN ARCHITECTS & ENGINEERS
FACILITIES MANAGEMENT DIVISION, NCDOT
1 SOUTH WILMINGTON STREET
RALEIGH, NORTH CAROLINA 27601
Phone: 919-707-4540 Fax: 919-715-0399

CONSULTANT:
ENGINEER
CLARKE DESIGN GROUP, PA
CIVIL, MECHANICAL AND ELECTRICAL ENGINEERING
3305-109 Durham Drive
Raleigh, North Carolina 27603
919.771.1918 fax: 919.779.0826
www.clarkedesigngroup.com
Corp. License # C-2652

DRAWING TITLE / DESCRIPTION:
PLUMBING PLAN

PROJECT TITLE:
I-40/I-85 ALAMANCE COUNTY REST AREA VENDING BUILDINGS
MILE MARKER 139, BURLINGTON, ALAMANCE COUNTY, NORTH CAROLINA

SCO ID NO.	14-11287-01A
TIP PROJ. NO.	–
WBS NO.	3707.3.23
FEDERAL ID NO.	

ASSET NUMBER:
CO.# SITE.# BLDG.#
01 - 013 - X

REVISIONS NO.	DATE

DATE ISSUED: 4-23-15
DRAWN BY: DS
CHECKED BY: BEB

SHEET NO.
P1

Alamance Vending M1

DUCTLESS SPLIT SYSTEM HEAT PUMP SCHEDULE

DHP-1 OUTDOOR HEAT PUMP UNIT	* MITSUBISHI MODEL #MUZ-GE18NA, 1.5 TON OUTDOOR HEAT PUMP UNIT, 19.2 SEER. 230 VOLT, 1 PHASE, CONDENSING UNIT 14A MCA, 20A MOCP. UNIT HAS STANDARD LOW AMBIENT COOLING. (14 DEGREE F.) FAN COIL UNIT IS POWERED VIA FACTORY PROVIDED FIELD INSTALLED POWER CABLE FROM OUTDOOR UNIT. THE POWER CABLE IS ROUTED WITH-IN THE REFRIGERANT LINE SET. PROVIDE THE MC CABLE SET SOUTHWIRE "EZ IN Mini-Split Cable".
DFC-1 DIRECT EXPANSION FAN COIL UNIT	* MITSUBISHI MODEL #MSZ-GE018NA FAN COIL UNIT. NET COOLING CAPACITY = 17,200 BTUH, 230 CFM LO TO 533 CFM HI. 1.5 TON NOMINAL, PROVIDE WIRED WALL MOUNTED PROGRAMMABLE THERMOSTAT (MITSUBISHI MODEL PAR-21MAA). FAN MOTOR 0.76, FLA 230 VOLT. SINGLE PH.

* OR APPROVED EQUAL

EXHAUST FAN EQUIPMENT SCHEDULE

EF-1	
EXHAUST FAN (EF-1)	* CARNES MODEL# VBK10-M2 IN-LINE DIRECT DRIVE EXHAUST FAN, 500 CFM @ 3/8" SP, 1000 RPM, 1/3 HP, 115V. 1 PHASE. THE ELECTRICAL CONTRACTOR SHALL PROVIDE THE SWITCH AND WIRE THE UNIT. THE HVAC CONTRACTOR SHALL PROVIDE UNIT. PROVIDE VIBRATION ISOLATION ON (4) FOUR THREADED ROD SUPPORTS, DISCONNECT SWITCH ON FAN HOUSING. LOCATE EXHAUST TERMINATION A MINIMUM OF 10'-0" FROM ANY INTAKES. PROVIDE FACTORY SPEED CONTROLLER FOR BALANCING ONLY.

* OR APPROVED EQUAL BY GREENHECK, OR PENN FANS.

AIR DISTRIBUTION SCHEDULE

MARK	* MANUFACTURER	MODEL NO.	FACE SIZE	MATERIAL	SERVICE	NOTES
EA	CARNES	RATA	18" X 18"	ALUMINUM	EXHAUST	WHITE, GYPSUM BOARD CEILING

COORDINATE BORDER TYPE WITH THE CEILING TYPE. SEE ARCH SHEETS.
PROVIDE CUT SHEETS TO OWNER/ARCH. PRIOR TO ORDERING.

* OR APPROVED EQUAL BY TUTTLE & BAILEY, OR METALAIRE

** PROVIDE ROUND TO RECTANGULAR DUCT TRANSITION ON GRILLE.

MECHANICAL SYSTEMS AND EQUIPMENT

METHOD OF COMPLIANCE:

Prescriptive [X] Energy Cost Budget [ ]

Thermal Zone 4a

Exterior Design Conditions
- winter dry bulb 22 F
- summer dry bulb 94 F

Interior Design Conditions
- winter dry bulb 72 F
- summer dry bulb 75 F
- relative humidity 50%

Building Heating Load 8,400 BTU/hr

Building Cooling Load 11,800 BTU/hr

Mechanical Spacing Conditioning System

Unitary – The building is served by (1) 1.5 ton ductless split system heat pump

Boiler – Not applicable to this project.

Chiller – Not applicable to this project.

Equipment efficiencies

Efficiencies and outputs are listed on equipment schedules – See drawings.

Equipment schedules with motors.

Motors used on this project are included in the efficiency rating of the unit. See drawings for efficiencies.

KEY NOTES FOR 1/M1

1. HEAT PUMP UNIT MOUNTED ON A 4" "POURED IN PLACE" CONCRETE PAD.
2. RUN THE REFRIGERANT LINES CONCEALED IN THE EXTERIOR WALL. SEAL WALL PENETRATION. PAINT ALL EXPOSED, EXTERIOR INSULATION WITH UV RESISTANT PAINT.
3. DUCTLESS SPLIT SYSTEM FAN COIL UNIT MOUNTED ON WALL WITH TOP AT 12" BELOW FINISH CEILING.
4. RUN CONDENSATE DRAIN TO THE EXTERIOR. CONCEAL IN EXTERIOR WALL. INSULATE THE ENTIRE LENGTH. TURN DOWN INTO THE PLANTING AREA.
5. WALL MOUNTED THERMOSTAT. MOUNT AT 48" AFF.
6. IN-LINE EXHAUST FAN ABOVE CEILING. SUPPORT FROM STRUCTURE WITH (4) 3/8" ALL THREADED STEEL RODS. PROVIDE VIBRATION ISOLATION ON EACH ROD. MOUNT AS HIGH AS POSSIBLE
7. RUN DUCT ABOVE VENDING CEILING. DROP DOWN AS REQUIRED IN STORAGE ROOM TO ALLOW DUCT CONNECTION TO FAN. TRANSITION BACK UP TO EXTERIOR GABLE VENT.
8. TRANSITION DUCT AS REQURIED TO EXTERIOR GABLE VENT.
9. RUN 24 X 18 DUCT TO BACK OF EXTERIOR GABLE VENT. PROVIDE SCREEN WIRE OVER END OF DUCT. SECURELY FASTEN DUCT TO VENT.
10. MOUNT THERMOSTAT ON WALL ABOVE TOP OF VENDING MACHINE.

LEGEND – MECHANICAL

- 12 X 8 — RECTANGULAR GALVANIZED STEEL DUCTWORK
- 12" DIA. — RIGID ROUND GALVANIZED STEEL DUCTWORK
- EXHAUST GRILLE
- T — THERMOSTAT MOUNT AT 48" AFF
- D — 3/4 IN PVC CONDENSATE DRAIN PIPING
- R — REFRIGERANT PIPING

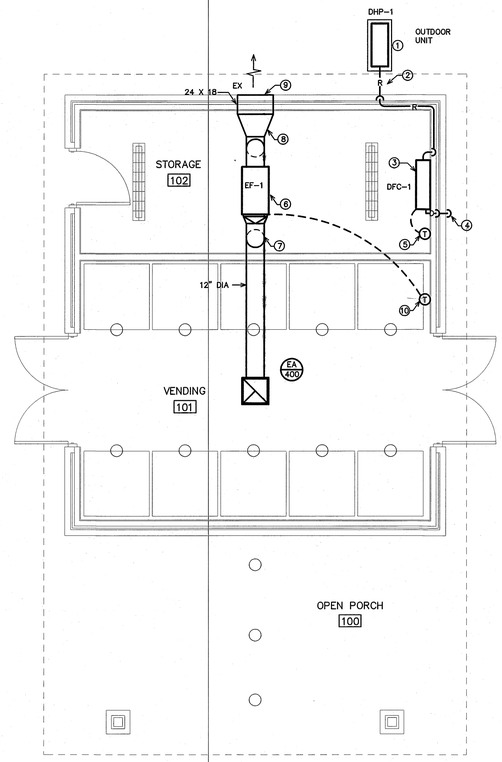

1/M1 HVAC PLAN
SCALE: 1/4" = 1'-0"

CONSTRUCTION DOCUMENTS

SEAL: NORTH CAROLINA PROFESSIONAL SEAL 22038 ENGINEER BENJAMIN E BURTE

DESIGNED BY:
FACILITIES DESIGN ARCHITECTS & ENGINEERS
FACILITIES MANAGEMENT DIVISION, NCDOT
1 SOUTH WILMINGTON STREET
RALEIGH, NORTH CAROLINA 27601
Phone: 919-707-4540 Fax: 919-715-0399

CONSULTANT:
ENGINEER
BURKE DESIGN GROUP, PA
MECHANICAL ENGINEERS
3305-109 Durham Drive
Raleigh, North Carolina 27603
919.771.1916 fax: 919.779.0826
email: benburke@nc.rr.com
Corp. License # C-2652

DRAWING TITLE / DESCRIPTION:
HVAC
PLAN

PROJECT TITLE:
I-40/I-85 ALAMANCE COUNTY
REST AREA VENDING BUILDINGS
MILE MARKER 139, BURLINGTON,
ALAMANCE COUNTY, NORTH CAROLINA

SCO ID NO.	14-11287-01A
TIP PROJ. NO.	-
WBS NO.	3707.3.23
FEDERAL ID NO.	-

ASSET NUMBER:
CO.# SITE.# BLDG.#
01 - 013 - X

REVISIONS

NO.	DATE

DATE ISSUED: 4-23-15
DRAWN BY: WBE
CHECKED BY: BEB

SHEET NO.
M1

DIVISION 16 – ELECTRICAL

PART 1 – GENERAL

1.1 DESCRIPTION OF THE WORK

A. Work under this section includes, but is not necessarily limited to, furnishing and installing the following:
   1. Lighting and power distribution system.
   2. Provide lighting fixtures per light fixture schedule with lamps to match.
   3. Wiring devices, boxes, cover plates, etc.
   4. Source of power for all items of equipment.
   5. Grounding.
   6. Other requirements and/or systems where shown.

B. All work shall be complete and items, equipment, etc., shall be electrically connected for proper and correct operation.

C. All work under this contract shall be installed in accordance with the latest edition of the following codes and standards insofar as they apply:
   1. The 2011 National Electrical Code.
   2. The National Electrical Safety Code.
   3. Underwriter's Laboratories, Inc., Standards and approved listings or other approved 3rd party listing agency.
   4. Electrical Testing Labatories standards.
   5. 2012 North Carolina State Building Code.
   6. 2012 North Carolina State Energy Code.

D. The Electrical Contractor shall be licensed in the State of North Carolina and have all local licenses required for the work.

E. Local permits are not required. All work must be inspected by the Office of State Construction state electrical inspector and the Engineer of Record. Provide certificate of inspection and approval from the state electrical inspector prior to the final inspection. The electrical contractor is responsible for contacting the state electrical inspector for all required inspections.

F. All work shall be done by skilled mechanics and shall present a neat, trim, workmanlike condition when complete.

G. All wiring must be tested, including phase conductors and grounding and the results documented prior to the final inspection.

1.2 INTENT

A. The intent of these specifications and the accompanying drawings is to convey as reasonably as possible the requirements for a complete job ready for the building to operate. The Electrical Contractor shall take this into consideration and include in his base bid allowance for contingencies as will allow him to provide minor pieces of equipment and labor not specifically indicated but required for the job to operate properly, at no additional cost to the Owner.

1.3 COORDINATION

A. Coordinate work with other contractors. Notify Architect of apparent conflicts early to expedite construction. If structural damage appears imminent, stop work and notify Architect for a decision before resuming operations.

B. Locations shown are approximate. The drawings do not give exact details as to elevations and locations of various pipes, fittings, ducts, conduit, etc., and do not show all offsets and other installation details which may be required. Coordinate all locations with architect before any rough–in.

1.4 SHOP DRAWINGS

A. Shop drawings shall be submitted for panels and service equipment, lighting, wiring devices, and cover plates. These may consist of the manufacturer's standard catalog or tear sheets and shall have the exact items being offered clearly identified.

PART 2 – PRODUCTS AND MATERIALS

2.1 GENERAL

A. All material shall be new and shall bear the manufacturer's name, trade name, and be third party acceptable to NCDOI listed and labeled where such standard has been established for the particular material. Materials shall be the standard products of manufacturer's regularly engaged in the manufacturer of the required type of equipment and the manufacturer's latest approved design.
   1. Boxes installed in concealed locations shall be set flush with the finished surfaces.
   2. Provide rated boxes in all fire barriers & walls installed per code.

2.2 CONDUCTORS

A. Conductors shall be color coded, sizes #4 and larger may be color taped on the job. Color coding shall comply with 2011 NEC 200.6.
Phase A– Black
Phase B– Red
Chase C– Blue
Neutral– White
Ground– Green

B. Conductors shall be manufactured by Dodge, Southwire or approved equal. Conductors shall meet the latest requirements of NEMA and IPCEA and shall be third party acceptable to NCDOI approved. The insulation type for interior wiring shall be dual rated THHN/THWN or XHHW. provide individual neutral for each circuit.

C. Metallic sheathed "MC"cable should not be used for this project, without designer authorization. MC cable is allowed for light whips 6'–0" or less and where concealed with–in existing construction to minimize demolition work. If used, MC cable shall be 1/2" with minimum #12 AWG copper wire and green insulated copper ground.

D. Conductors shall be spliced and taped as follows:
   1. Size #10 and #12, use Ideal "Wing Nuts". "Piggy" connectors shall not be used. Connectors shall be rated for 150 degrees C for use in recessed lighting fixtures.
   2. Size #8 and larger shall be solderless screw and screw–clamping type, smoothly covered and shaped with rubber gum type with final cover vinyl plastic electrical type. In lieu of rubber gum and vinyl plastic type, factory fabricated approved preformed insulating covers may be used. All connectors shall be UL approved.
   3. No split–bolt type connectors may be used.

E. All branch wire and connections shall be copper and sized per National Electric Code.

F. All conductors shall be continuous without splice between junction, outlet, device boxes, etc. No splicing will be permitted in panelboard cabinets, safety switches, etc.

G. All wiring in mechanical spaces shall be plenum rated.

H. Provide GFI protection within 6'–0" of any sink.

I. All multi–wire branch circuits shall comply with 2011 NEC, 210.4(B).

2.3 PANELBOARDS, SAFETY SWITCHES

A. Panelboards shall comply with NEMA Standard PB 1 – Latest Edition and as manufactured by Cutler Hammer, Square D or ITE–Siemens. All panel boards must have copper buses with bolt on breakers

B. Safety switches shall be heavy duty type, size and rating as required for lead service. Safety switches shall be fused or unfused as shown and/or as required. Safety switches serving motor loads shall be horsepower rated for load served.

2.4 WIRING DEVICES

A. Wiring devices shall be commercial grade by Bryant, Leviton, or approved equal. With matching cover. Color by Architect.

B. Wiring devices installed under a Kitchen Hood shall have stainless steel covers.

C. Wiring devices installed over counters shall comply with ANSI A117.1.

D. All wiring devices must have a dedicated green ground screw Self–grounding type is not acceptable.

2.7 CONDUIT

A. PVC conduit will be allowed under slab. Provide rigid turn–ups.

B. All exposed conduit shall be rigid where exposed to the elements, located less than 8'–0" above grade or where exposed to hazardous conditions.

PART 3 – EXECUTION

3.1 CIRCUIT GROUNDING

A. All circuits shall contain an insulated, green, copper grounding conductor, sized in accordance with Table 250–122 of the NEC. Grounding conductors shall be connected to equipment grounding bus in panelboard and securely attached and grounded to the device or enclosure at the other end.

3.2 GROUNDING TYPE CONVENIENCE OUTLETS AND SWITCHES

A. Outlets and switches shall be solidly grounded to equipment grounding system with a green colored insulated conductor. Electrical connections shall be continuous from equipment ground bus in panelboard to the hex nut on the convenience outlet or switch.

3.3 MOTORS

A. All motors shall be connected to conduit system with short length (minimum length 24" and maximum length 36") of flexible liquidtight conduit.

3.4 EQUIPMENT LABELING

A. Provide permanent penolic plastic name plates for all panelboards, safety switches, wiring troughs, etc., for identification of equipment controlled, services, etc. Nameplates shall be securely and permanently attached to equipment with stainless steel, self tapping screws. Nameplates shall include the name of the equipment and where it is fed from.
Color Coding–
Blue surface with white core– 120/208v equipment
Black surface with white core– 277/480v equipment
Bright red surface with white core– fire alarm systems
Dark red surface with white core– security systems
Green surface with white core– "emergency" systems
Orange surface with white core– telephone systems
Brown surface with white core– data systems
White surface with black core– paging systems
Purple surface with white core– TV systems

B. All switch plates, receptacle plates and outlet covers shall be labeled with machine printed vinyl labels identifying the circuit(s) within.

C. All empty conduit runs shall be identified and indicated where they terminate.

D. Provide typewritten directory in each panelboard to clearly identify each circuit, service, etc.

3.5 JUNCTION AND/OR PULL BOXES

A. Boxes shall be installed where necessary to avoid excessive runs and/or too many bends between outlets.

3.6 PULL WIRE

A. Leave pull wire in each empty conduit run.

3.7 GROUNDING

A. All grounding shall be in accordance with Article 250 of the NEC. In addition, the following requirements shall be met:
   1. Grounding conductors shall be installed as to permit the shortest and most direct path from equipment to ground. All connections to grounding conductors shall be accessible.
   2. Equipment ground continuity shall be maintained through flexible metal conduit.
   3. All wiring devices equipped with grounding connection shall be solidly grounded to ground system with grounding conductors.
   4. The frame of all lighting fixtures shall be securely grounded to the equipment ground system with grounding conductors.
   5. All equipment enclosures, and non–current–carrying metallic parts of electrical equipment, raceway systems, etc., shall be effectively and adequately bonded to ground.
   6. All equipment enclosures, and non–current–carrying metallic parts of electrical equipment, raceway systems, etc., shall be effectively and adequately bonded to ground.
   7. The reaceway system shall not be relied on for ground continuity A green grounding conductor, properly sized per NEC table 250–122, shall be run in all power raceways.

3.8 ELECTRICAL WORK IN CONNECTION WITH OTHER WORK

A. The trade(s) furnishing equipment will provide disconnect switches, motor starters, and make final equipment connections. ELECTRICAL CONTRACTOR will make line side connections to disconnect switches or motor starters.

3.9 CLEAN UP

A. During construction, keep the site clean of debris. Upon completion, and before final inspection, clean up the premises to remove all evidence of work. In addition upon completion of construction leave equipment clean.

3.10 GUARANTEE

A. Guarantee all materials and labor included in the electrical work for a period of one year from date of final acceptance by the Owner. Any part or parts of the work or equipment which prove to be defective during the guarantee period shall be replaced at no additional cost to the Owner.

ELECTRICAL EQUIPMENT DEDICATED SPACE PER ARTICLE 110.26.F.1 OF N.E.C.

(1) DEDICATED SPACE
NOT TO SCALE

THIS FIGURE ILLUSTRATES THE WORKING SPACE IN FRONT OF THE ELECTRICAL EQUIPMENT REQUIRED BY SECTION 110.26 OF THE N.E.C.

ELECTRICAL EQUIPMENT WORKING CLEARANCE PER ARTICLE 110.26 OF N.E.C.

WORKING CLEARANCES			
VOLTAGE TO GROUND NOMINAL	MIN. CLEAR DISTANCE IN FEET		
CONDITION:	1	2	3
0–150	3	3	3
151–600	3	3–1/2	4

WHERE THE CONDITIONS ARE AS FOLLOWS:

1 EXPOSED LIVE PARTS ON ONE SIDE OF THE WORKING SPACE AND NO LIVE OR GROUNDED PARTS ON THE OTHER SIDE OF THE WORKING SPACE, OR EXPOSED LIVE PARTS ON BOTH SIDES OF THE WORKING SPACE THAT ARE EFFECTIVELY GUARDED BY INSULATING MATERIALS.

2 EXPOSED LIVE PARTS ON ONE SIDE OF THE WORKING SPACE AND GROUNDED PARTS ON THE OTHER SIDE OF THE WORKING SPACE. CONCRETE, BRICK OR TILE WALLS SHALL BE CONSIDERED AS GROUNDED.

3 EXPOSED LIVE PARTS ON BOTH SIDES OF THE WORK SPACE.

(2) ELECTRICAL CLEARANCES
NOT TO SCALE

ELECTRICAL LEGEND

Symbol	Description
A (boxed X)	LIGHT FIXTURE: LETTER DENOTES TYPE OF LIGHT FIXTURE (REFER TO LIGHTING PLAN AND FIXTURE SCHEDULE).
WP/GFI	DUPLEX RECEPTACLE – 120V; MOUNT 18" TO CENTER AFF UNLESS NOTED OTHERWISE; 'WP' INDICATES WEATHER PROOF, 'GFI' INDICATES GROUND FAULT CURRENT INTERRUPT PROTECTED.
	QUADRAPLEX RECEPTACLE – 120V
S	LIGHT SWITCH
S_M	LIGHT SWITCH WITH KEY OPERATION. PROVIDE AN INDICATOR LIGHT TO SHOW LIGHTS ON. PROVIDE LABEL.
(S)	MOTOR RATED SWITCH
(J)	JUNCTION BOX
	SINGLE–POLE HOMERUN TO PANELBOARD
	TWO–POLE OR 3–POLE HOMERUN TO PANELBOARD
	BRANCH CIRCUIT WIRING
	SWITCH LEG
	GROUND CONNECTION
PANEL A	DISTRIBUTION PANELBOARD
	DISCONNECTING MEANS AS REQUIRED BY CODE
PC	EXTERIOR PHOTOCELL (PC)

Alamance Vending E1

LIGHTING SCHEDULE *

MARK	MANUFACTURER	CATALOG NO.	VOLT.	LAMPS NO.	LAMPS TYPE	LAMPS W	BALLAST TYPE	W/ FIXTURE	REMARKS
A	DAY–BRITE	T132–UNV–1/2–EB–CG4	120	1	T8	32	–	32	48" STANDARD STRIP, WIRE GUARD
B	CREE	XSPW–A–0–3–M–G–U–T	120	–	LED	25	–	25	LED WALL PACK
C	INDY	L6–45–35–1–G2	120	–	LED	32	–	32	6" LED CAN, IC RATED
D	CASTGUARD	H–15416–96–CLR–CB8–91 W 97 GUARD	120	–	LED	20	–	20	WAREHOUSE SHADE BARN LIGHT. COLOR BY ARCHITECT.
E	HUBBELL	ALF–6LU–5K–BZ	120	–	LED	10.7	–	10.7	EXTERIOR SPOT LIGHT. PROVIDE HYDREL–PSSA PEDESTAL MOUNT WITH CONCRETE BASE.
F	HUBBELL	LFS–12LU–N	120	–	LED	13	–	13	EXTERIOR SPOT LIGHT. PROVIDE HYDREL–PSSA PEDESTAL MOUNT WITH CONCRETE BASE.

* OR APPROVED EQUAL BY DAYBRITE, LITHONIA, CREE. PROVIDE CUT SHEETS FOR OWNER APPROVAL PRIOR TO ORDERING FIXTURES. FOR FLUORESCENT FIXTURES CONTROLLED BY MOTION SENSOR, PROVIDE "PROGRAMMED RAPID START" BALLASTS. CATALOG NUMBERS ARE FOR REFERENCE ONLY, ACTUAL NUMBERS MAY VARY. 'EB' DENOTES ELECTRONIC BALLAST.

** VERIFY FIXTURE HAS INTEGRAL LOCAL DISCONNECTING MEANS PER NEC 410.130 (G) (2011).

2012 NC ENERGY CODE ELECTRICAL SUMMARY

ELECTRICAL SYSTEM AND EQUIPMENT

Method of Compliance:
Energy Code: ☒ Prescriptive ☐ Performance
ASHRAE 90.1: ☐ Prescriptive ☐ Performance

Lighting schedule (each fixture type)
lamp type required in fixture
number of lamps in fixture
ballast type used in the fixture
number of ballasts in fixture
total wattage per fixture
(See Light Fixture Schedule)
total interior wattage specified vs allowed (whole building or space by space) — 419 VA / 470 VA
total exterior wattage specified vs allowed

Additional Prescriptive Compliance
☐ 506.2.1 More Efficient Mechanical Equipment
☐ 506.2.2 Reduced Lighting Power Density
☐ 506.2.3 Energy Recovery Ventilation Systems
☐ 506.2.4 Higher Efficiency Service Water Heating
☐ 506.2.5 On-Site Supply of Renewable Energy
☐ 506.2.6 Automatic Daylighting Control Systems

CONSTRUCTION DOCUMENTS

SEAL: NORTH CAROLINA PROFESSIONAL ENGINEER SEAL 22038 BENJAMIN E. BURKE

DESIGNED BY:
FACILITIES DESIGN
ARCHITECTS & ENGINEERS
FACILITIES MANAGEMENT DIVISION, NCDOT
1 SOUTH WILMINGTON STREET
RALEIGH, NORTH CAROLINA 27601
Phone: 919–707–4540 Fax: 919–715–0399

CONSULTANT:
ENGINEER
BURKE DESIGN GROUP, PA
CONSULTING ENGINEERS
3305-109 Durham Drive
Raleigh, North Carolina 27603
919.771.1916 fax: 919.779.0826
email: benburke@nc.rr.com
Corp. License # C-2652

DRAWING TITLE / DESCRIPTION:
ELECTRICAL
DETAILS / SPECIFICATIONS

PROJECT TITLE:
I–40/I–85 ALAMANCE COUNTY
REST AREA VENDING BUILDINGS
MILE MARKER 139, BURLINGTON,
ALAMANCE COUNTY, NORTH CAROLINA

SCO ID NO.	14–11287–01A
TIP PROJ. NO.	–
WBS NO.	3707.3.23
FEDERAL ID NO.	–

ASSET NUMBER:
CO.# SITE.# BLDG.#
01 ▪ 013 ▫ X

REVISIONS
NO. | DATE

DATE ISSUED: 4–23–15
DRAWN BY: BEB
CHECKED BY: BEB

SHEET NO.
E1

Nonsolar Versions E2

NEW PANEL- 'A'

MAKE: CUTLER HAMMER
TYPE: PRL1A
RATING: 120/240 1 PHASE 3 WIRE
MOUNTING: SURFACE
MINIMUM AIC: 10,000
100A MAIN CIRCUIT BREAKER
EQUIPMENT GROUND BUS ____ ☒YES ☐NO
SERVICE ENTRY RATED ____ ☒YES ☐NO

	LOAD SERVICE	CKT BRKR	WATTS PER PHASE A	WATTS PER PHASE B	CKT NO	NEUTRAL A	NEUTRAL B	CKT NO	WATTS PER PHASE A	WATTS PER PHASE B	CKT BRKR	LOAD SERVICE
G	REC- VENDING	20A	1000		1			2	360		20A	REC- STORAGE/EXTERIOR
G	REC- VENDING			1000	3			4		360	20A	REC- STORAGE
G	REC- VENDING		1000		5			6	372		20A	EF-1
G	REC- VENDING			1000	7			8		1320	20A	DHP-1
G	REC- VENDING		1000		9			10	1320			
G	REC- VENDING			1000	11			12		96	20A	LIGHTS
G	REC- VENDING		1000		13			14	400		20A	LIGHTS
G	REC- VENDING			1000	15			16		365	20A	LIGHTS
G	REC- VENDING		1000		17			18	45		20A	LIGHTS- SITE
G	REC- VENDING			1000	19			20		180	20A	WATER FEATURE
	SPARE		---		21			22	---			SPACE
	SPARE			---	23			24		---		SPACE
	SPARE		---		25			26	---			SPACE
	SPACE			---	27			28		---		SPACE
	SPACE		---		29			30	---			SPACE
	NOTES	SUB-TOTALS 'B'	5000	5000								

		A	B	
100A	BUS	2497	2321	SUB-TOTALS 'A'
100A	LUGS	5000	5000	SUB-TOTALS 'B'
100A	FEED	7497	7321	GRAND TOTAL
#2	SIZE	62A	61A	AMPS/PHASE

TOTAL CONNECTED LOAD

OR APPROVED EQUAL BY GE OR SQUARE D

G GFCI BREAKER

NEC ALLOWABLE DEMAND FACTORS

1. DEMAND FACTORS PER NEC 220
2. LARGEST OF: NEC TABLE 220.12 OR CONNECTED LOAD
3. NEC TABLE 220.56
4. NEC 220.51
5. NEC 220.43A, 200 VA/LINEAR FT
6. NON-COINCIDENT LOADS, LARGEST OF THE TWO LOADS IS COUNTED

DIVERSIFIED LOAD SUMMARY

LOAD TYPE		DEMAND FACTOR	A	B	TOTAL DIVERSIFIED LOAD
GENERAL LIGHTING	(2)	125%	500	576	1076
TRACK LIGHTING		125%	---	---	---
GENERAL USE RECEPTACLES		≤10KVA@100% >10KVA@50%	360	360	720
			---	---	---
MOTORS AND EQUIPMENT	LARGEST	125%	1250	---	1250
	ALL OTHERS	100%	4372	5000	9372
WATER HEATERS		125%	---	---	---
KITCHEN EQUIPMENT	(3)	100%	---	---	---
FIX. ELEC. SPACE HEAT.	(4)	100%	1320	1320	2640
SHOW WINDOW LIGHTS	(5)	125%	---	---	---
SIGN		125%	---	---	---
MISC		100%	---	---	---
PHASE (TOTAL VA)			7802	7256	15058
TOTAL AMPS			65A	60A	VOLT AMPS / VOLTS = 62.7A TOTAL AMPS

RISER WIRING SCHEDULE

1. 100A: 3-#3 IN 1" CONDUIT
2. #6CU GND TO BUILDING STEEL, FOUNDATION STEEL AND METALLIC WATER MAIN AND #6 CU GND TO 10' X 3/4" DRIVEN GROUND ROD

VERIFY AVAILABLE FAULT CURRENT AT SERVICE LOCATION WITH LOCAL POWER COMPANY. PROVIDE INFORMATION TO ENGINEER TO CALCULATE MINIMUM PANEL AIC RATING PRIOR TO RELEASING GEAR. AIC RATING ON PANELS ARE FOR PERMIT REVIEW AND PRICING ONLY. EC SHALL PROVIDE LABELING INDICATING FAULT CURRENT AT SERVICE ENTRY AND ON ALL PANELS PRIOR TO CO.

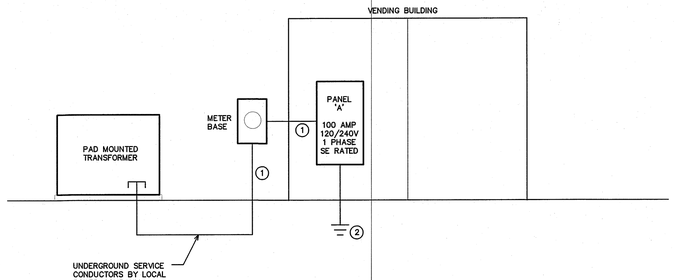

3/E2 SERVICE RISER
SCALE: NOT TO SCALE

NOTE:
SEE SITE UTILITY PLANS FOR SCOPE OF ELECTRICAL SITE WORK. THE ELECTRICAL CONTRACTOR SHALL PROVIDE ALL LIGHTING AND POWER AS REQUIRED.

THE FLOORPLANS SHOWN REPRESENT BUILDINGS ON BOTH THE NORTH BOUND AND SOUTH BOUND LANES.

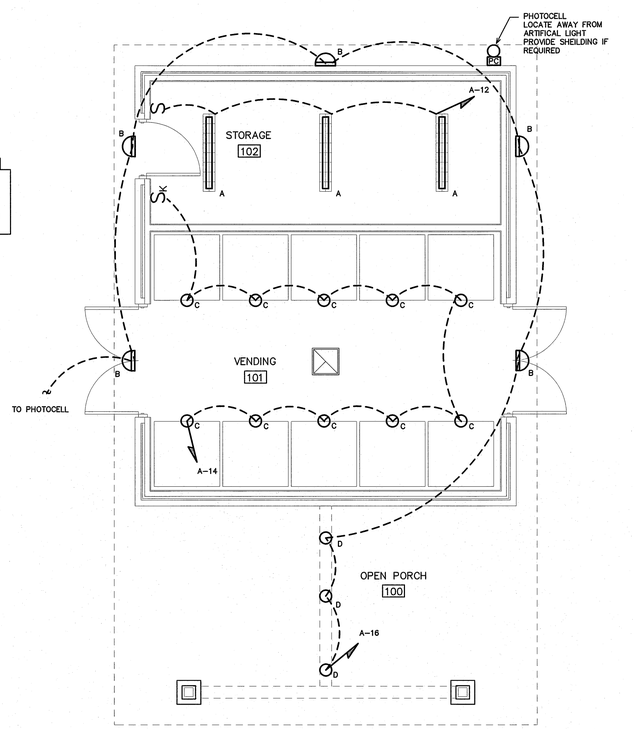

1/E2 LIGHTING PLAN
SCALE: 1/4" = 1'-0"

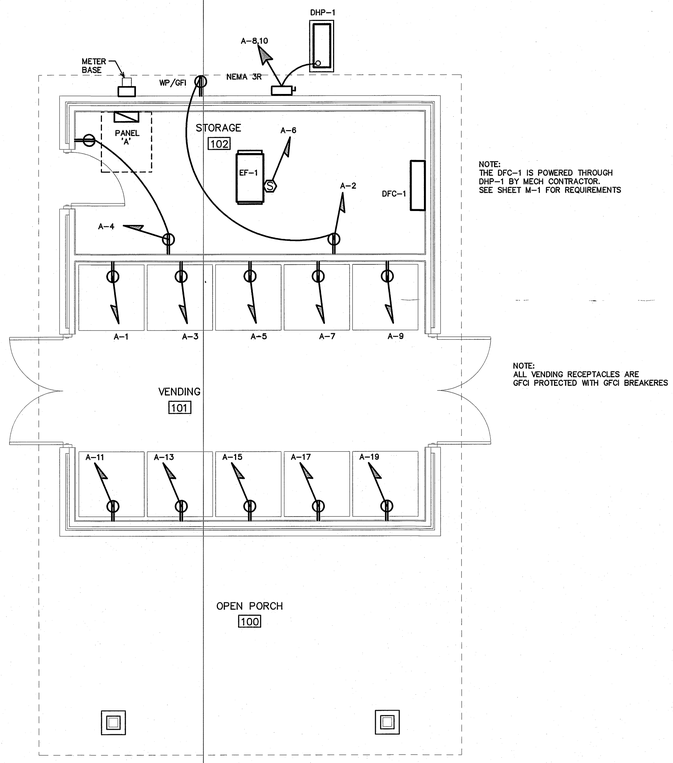

NOTE:
THE DFC-1 IS POWERED THROUGH DHP-1 BY MECH CONTRACTOR. SEE SHEET M-1 FOR REQUIREMENTS

NOTE:
ALL VENDING RECEPTACLES ARE GFCI PROTECTED WITH GFCI BREAKERES

2/E2 POWER PLAN
SCALE: 1/4" = 1'-0"

CONSTRUCTION DOCUMENTS

SEAL: NORTH CAROLINA PROFESSIONAL SEAL 22038 ENGINEER BENJAMIN E BURTCH

DESIGNED BY:
FACILITIES DESIGN ARCHITECTS & ENGINEERS
FACILITIES MANAGEMENT DIVISION, NCDOT
1 SOUTH WILMINGTON STREET 27601
RALEIGH, NORTH CAROLINA
Phone: 919-707-4540 Fax: 919-715-0399

CONSULTANT:
ENGINEER
BURTCH ENGINEERING GROUP, PA
CIVIL ELECTRICAL MECHANICAL
3305-109 Durham Drive
Raleigh, North Carolina 27603
919.771.1918 fax: 919.779.0826
email: benburtch@nc.rr.com
Corp. License # C-2602

DRAWING TITLE / DESCRIPTION:
ELECTRICAL PLANS

PROJECT TITLE:
I-40/I-85 ALAMANCE COUNTY REST AREA VENDING BUILDINGS
MILE MARKER 139, BURLINGTON, ALAMANCE COUNTY, NORTH CAROLINA

SCO ID NO.	14-11287-01A
TIP PROJ. NO.	-
WBS NO.	3707.3.23
FEDERAL ID NO.	-
ASSET NUMBER: CO.# SITE.# BLDG.#	01 - 013 - X

REVISIONS

NO.	DATE

DATE ISSUED: 4-23-15
DRAWN BY: BEB
CHECKED BY: BEB

SHEET NO.
E2

SITE LIGHTING MUST REMAIN OPERABLE THROUGHOUT CONSTRUCTION.

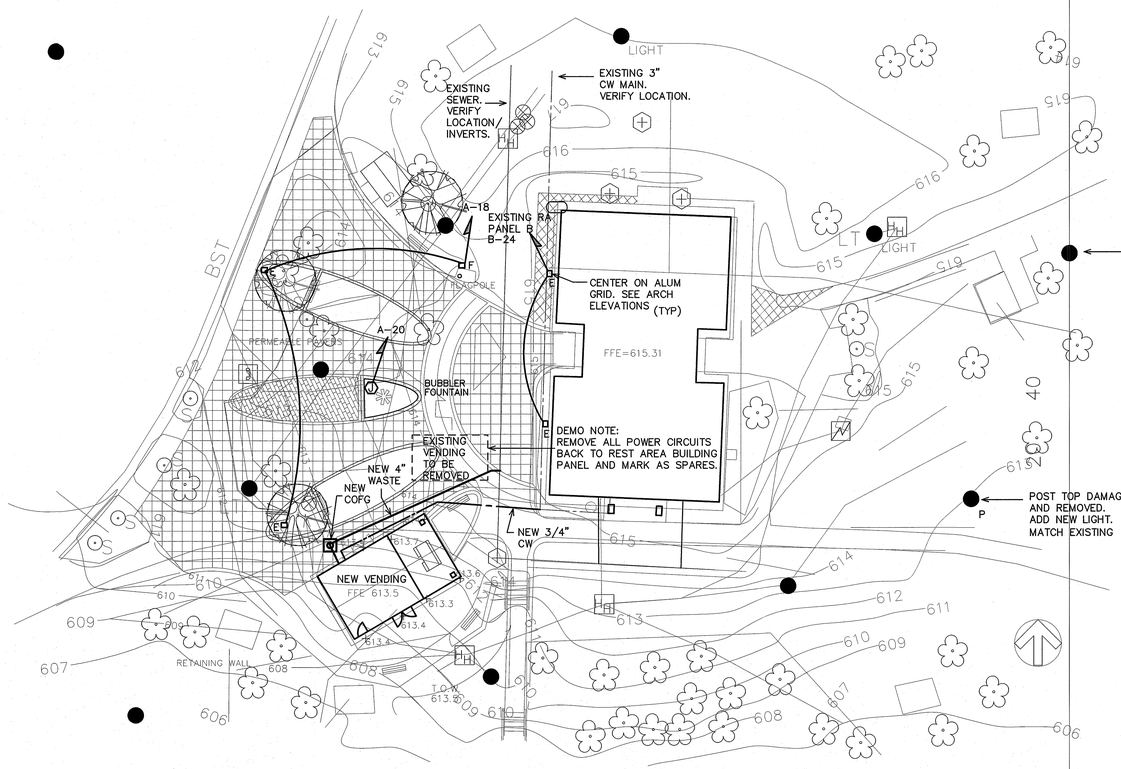

1 / U1 NBL UTILITY PLAN
SCALE: 1" = 20'

CONSTRUCTION DOCUMENTS

SEAL:

NORTH CAROLINA PROFESSIONAL ENGINEER SEAL 22038 BENJAMIN E. BURKE

DESIGNED BY:
FACILITIES DESIGN
ARCHITECTS & ENGINEERS
FACILITIES MANAGEMENT DIVISION, NCDOT
1 SOUTH WILMINGTON STREET
RALEIGH, NORTH CAROLINA 27601
Phone: 919-707-4340 Fax: 919-715-0399

NORTH CAROLINA DEPARTMENT OF TRANSPORTATION

CONSULTANT:
ENGINEER
BURKE DESIGN GROUP, PA
CONSULTING ENGINEERS
3305-106 Durham Drive
Raleigh, North Carolina 27603
919.771.1916 fax: 919.779.0826
email: benburke@mc.rr.com
Corp. License # C-2652

DRAWING TITLE / DESCRIPTION:
NBL UTILITY PLAN

PROJECT TITLE:
I-40/I-85 ALAMANCE COUNTY
REST AREA VENDING BUILDINGS
MILE MARKER 139, BURLINGTON,
ALAMANCE COUNTY, NORTH CAROLINA

SCO ID NO.	14-11287-01A
TIP PROJ. NO.	-
WBS NO.	3707.3.23
FEDERAL ID NO.	-

ASSET NUMBER:
CO.# SITE.# BLDG.#
01 - 013 - X

REVISIONS
NO. | DATE

DATE ISSUED: 4-23-15
DRAWN BY: DS
CHECKED BY: BEB

SHEET NO.
U1

SITE LIGHTING MUST REMAIN OPERABLE THROUGHOUT CONSTRUCTION.

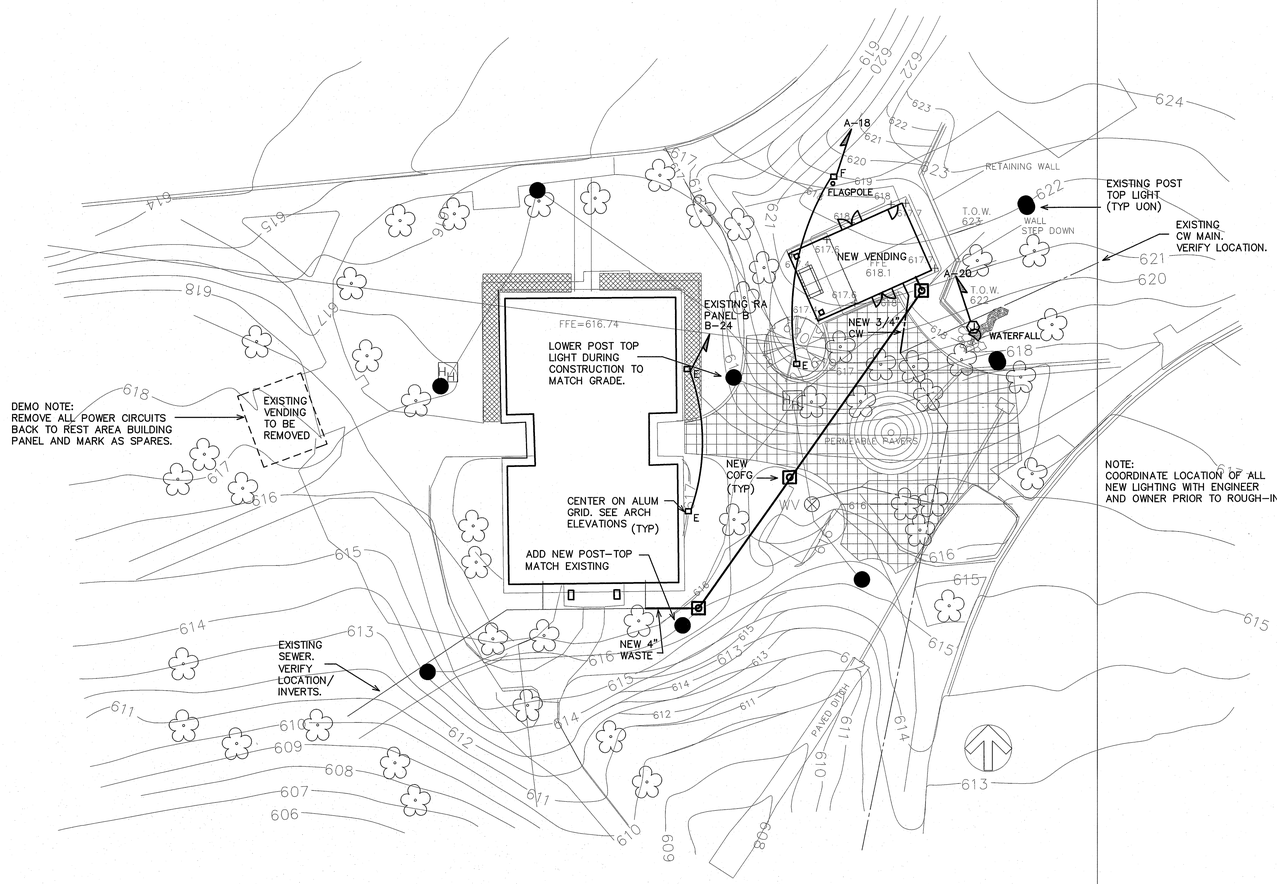

NOTE:
COORDINATE LOCATION OF ALL NEW LIGHTING WITH ENGINEER AND OWNER PRIOR TO ROUGH-IN.

1 / U2 SBL UTILITY PLAN
SCALE: 1" = 20'

CONSTRUCTION DOCUMENTS

SEAL: NORTH CAROLINA PROFESSIONAL SEAL 22038 ENGINEER BENJAMIN E. BURKE

DESIGNED BY:
FACILITIES DESIGN
ARCHITECTS & ENGINEERS
FACILITIES MANAGEMENT DIVISION, NCDOT
1 SOUTH WILMINGTON STREET
RALEIGH, NORTH CAROLINA 27601
Phone: 919-707-4540 Fax: 919-715-0399

STATE OF NORTH CAROLINA DEPARTMENT OF TRANSPORTATION

CONSULTANT:
ENGINEER
BURKE DESIGN GROUP, PA
CONSULTING ENGINEERS
3305-109 Durham Drive
Raleigh, North Carolina 27603
919.771.1916 fax: 919.779.0826
email: benburke@nc.rr.com
Corp. License # C-2652

DRAWING TITLE / DESCRIPTION:
SBL UTILITY PLAN

PROJECT TITLE:
I-40/I-85 ALAMANCE COUNTY
REST AREA VENDING BUILDINGS
MILE MARKER 139, BURLINGTON,
ALAMANCE COUNTY, NORTH CAROLINA

SCO ID NO.	14-11287-01A
TIP PROJ. NO.	-
WBS NO.	3707.3.23
FEDERAL ID NO.	-

ASSET NUMBER:
CO.# SITE.# BLDG.#
01 - 013 - X

REVISIONS

NO.	DATE

DATE ISSUED: 4-23-15
DRAWN BY: DS
CHECKED BY: BEB

SHEET NO.
U2

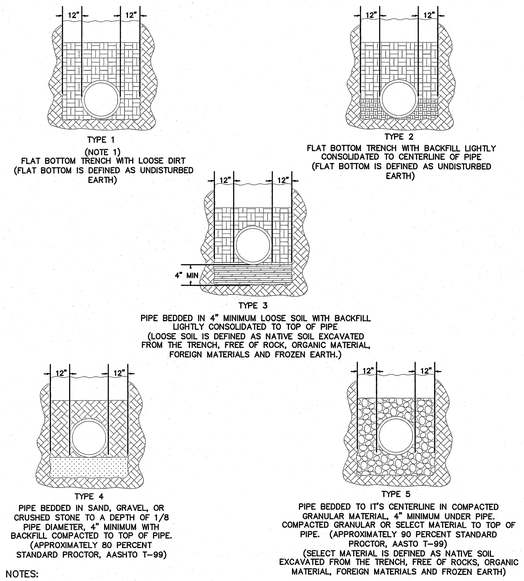

NOTES:

1. FOR NORMAL PIPE SIZES 14 INCH AND LARGER, CONSIDERATION SHOULD BE GIVEN TO THE USE OF LAYING CONDITIONS OTHER THAN TYPE 1.
2. CONSIDERATION OF THE PIPE-ZONE EMBEDMENT CONDITIONS INCLUDED IN THIS FIGURE MAY BE INFLUENCE BY FACTORS OTHER THAN PIPE STRENGTH. FOR ADDITIONAL INFORMATION ON PIPE BEDDING AND BACKFILL, SEE ANSI/AWWA C600.

(1/U3) PIPE BURIAL DETAILS

SCALE: NOT TO SCALE

UTILITY SEPARATION NOTES

1) LATERAL SEPARATION OF SEWERS OR WATER MAINS. WATER MAINS SHALL BE LAID AT LEAST TEN (10) FEET LATERALLY FROM EXISTING OR PROPOSED SEWERS, UNLESS LOCAL CONDITIONS OR BARRIERS PREVENT A TEN (10) FOOT LATERAL SEPARATION--IN WHICH CASE:
   - A) THE WATER MAIN IS LAID IN A SEPARATE TRENCH, WITH THE ELEVATION ON THE BOTTOM OF THE WATER MAIN AT LEAST EIGHTEEN (18) INCHES ABOVE THE TOP OF SEWER; OR
   - B) THE WATER MAIN IS LAID IN THE SAME TRENCH AS THE SEWER WITH THE WATER MAIN LOCATED AT ONE SIDE ON A BENCH OF UNDISTURBED EARTH, AND WITH THE ELEVATION OF THE BOTTOM OF THE WATER MAIN AT LEAST EIGHTEEN (18) INCHES ABOVE THE TOP OF SEWER.
2) CROSSING A WATER MAIN OVER A SEWER. WHENEVER NECESSARY FOR A WATER MAIN TO CROSS OVER A SEWER, THE WATER MAIN SHALL BE LAID AT SUCH AN ELEVATION THAT THE BOTTOM OF THE WATER MAIN IS AT LEAST EIGHTEEN (18) INCHES ABOVE THE TOP OF THE SEWER, UNLESS LOCAL CONDITIONS OR BARRIERS PREVENT AN EIGHTEEN (18) INCH SEPARATION--IN WHICH CASE, BOTH THE WATER MAIN AND SEWER SHALL BE CONSTRUCTED OF FERROUS MATERIALS AND WITH JOINTS THAT ARE EQUIVALENT TO WATER MAIN STANDARDS FOR A DISTANCE OF TEN (10) FEET ON EACH SIDE OF THE CROSSING.
3) CROSSING A WATER MAIN UNDER A SEWER. WHENEVER IT IS NECESSARY FOR A WATER MAIN TO CROSS UNDER A SEWER, BOTH THE WATER MAIN AND THE SEWER SHALL BE CONSTRUCTED OF FERROUS MATERIALS AND WITH JOINTS EQUIVALENT TO WATER MAIN STANDARDS FOR A DISTANCE OF THE (10) FEET ON EACH SIDE OF THE POINT(S) OF CROSSING. A SECTION OF WATER MAIN PIPE SHALL BE CENTERED AT THE POINT OF CROSSING.
4) SEWER AND STORMWATER PIPES TO HAVE A MINIMUM OF 24" SEPARATION FROM BOTTOM OF STORMWATER PIPE AND TOP OF SEWER PIPE.

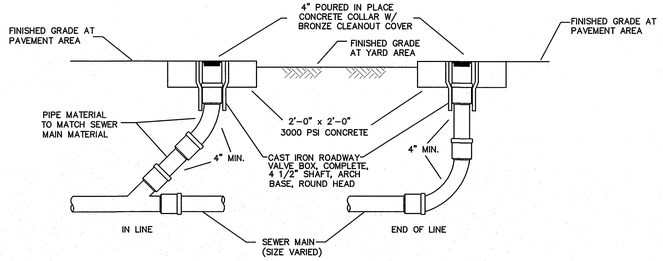

(2/U3) GRAVITY SEWER CLEANOUT

SCALE: NOT TO SCALE

NOTE: CONCRETE VALVE PAD REQUIRED ON ALL VALVES.

APPROVED METHOD FOR EXTENSION OF VALVE BOX

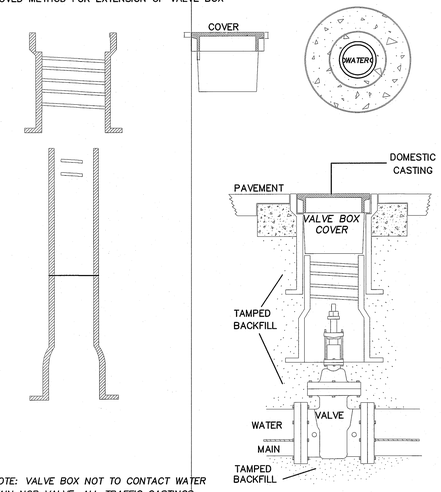

NOTE: VALVE BOX NOT TO CONTACT WATER MAIN NOR VALVE. ALL TRAFFIC CASTINGS MUST BE CLASS 35 OR GREATER DOMESTICALLY CAST. VALVE BOX SHALL BE THREADED TYPE.

(3/U3) WATER VALVE DETAILS

SCALE: NOT TO SCALE

CONSTRUCTION DOCUMENTS

SEAL:

NORTH CAROLINA PROFESSIONAL SEAL 22038 ENGINEER BRUCE E. BURKE

DESIGNED BY:

FACILITIES DESIGN ARCHITECTS & ENGINEERS
FACILITIES MANAGEMENT DIVISION, NCDOT
1 SOUTH WILMINGTON STREET
RALEIGH, NORTH CAROLINA 27601
Phone: 919-707-4540 Fax: 919-715-0399

CONSULTANT:

ENGINEER
BURKE DESIGN GROUP, PA
CIVIL ENGINEERING
3305-109 Durham Drive
Raleigh, North Carolina 27603
919.771.1916 fax: 919.779.0826
email: beburke@nc.rr.com
Corp. License # C-2852

DRAWING TITLE / DISCRIPTION:

UTILITY DETAILS

PROJECT TITLE:

I-40/I-85 ALAMANCE COUNTY REST AREA VENDING BUILDINGS

MILE MARKER 139, BURLINGTON, ALAMANCE COUNTY, NORTH CAROLINA

SCO ID NO.	14-11287-01A
TIP PROJ. NO.	-
WBS NO.	3707.3.23
FEDERAL ID NO.	-

ASSET NUMBER:
CO.# SITE.# BLDG.#
01 - 013 - X

REVISIONS

NO.	DATE

DATE ISSUED: 4-23-15
DRAWN BY: DS
CHECKED BY: BEB

SHEET NO.

U3