DocuSign Envelope ID: 8FD56319-8B4E-484F-855E-D771699D41AB

TIP PROJECT: 17BP.7.R.71

CONTRACT:

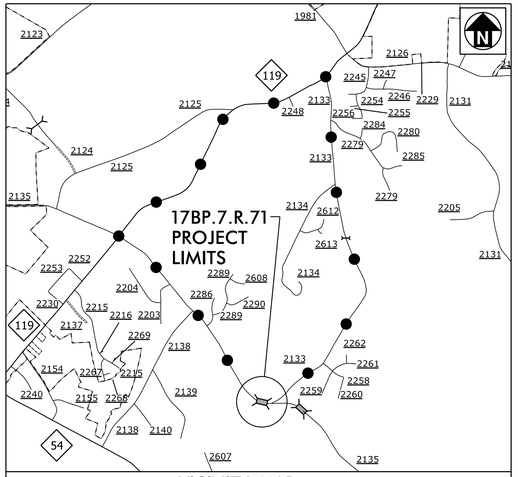

VICINITY MAP
(NOT TO SCALE)
OFF-SITE DETOUR

STATE OF NORTH CAROLINA
DIVISION OF HIGHWAYS

ALAMANCE COUNTY

LOCATION: BRIDGE NO.82 OVER PRONG OF HAW CREEK ON SR 2135 (S JIM MINOR ROAD)

TYPE OF WORK: GRADING, PAVING, DRAINAGE AND STRUCTURE

STATE	STATE PROJECT REFERENCE NO.	SHEET NO.	TOTAL SHEETS
N.C.	17BP.7.R.71	1	

STATE PROJECT NO.	F.A. PROJ. NO.	DESCRIPTION

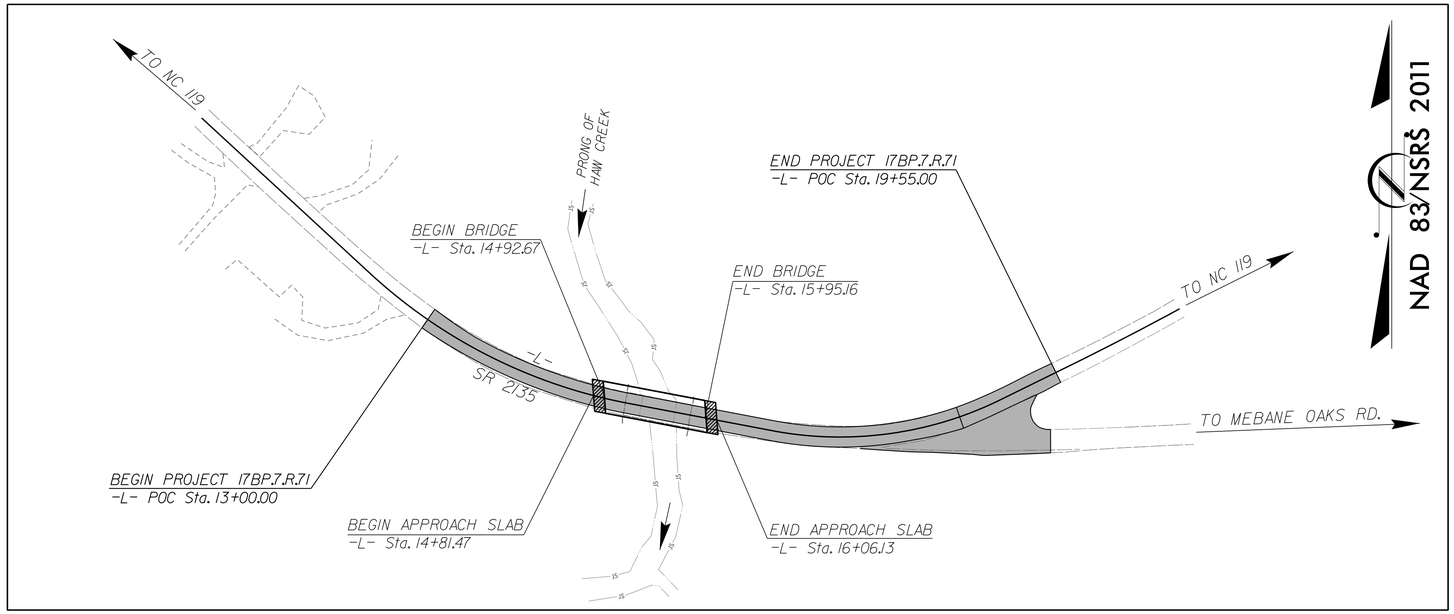

*DESIGN EXCEPTION:
MIN. HORIZONTAL CURVE RADIUS
SAG VERTICAL CURVE K
HORIZONTAL SSD
VERTICAL SSD
SUPERELEVATION

STATE OF NORTH CAROLINA DEPARTMENT OF TRANSPORTATION

DESIGN DATA

ADT 2011 = 1700

V = 45 MPH

SUBREGIONAL TIER

LOCAL

PROJECT LENGTH

LENGTH ROADWAY TIP PROJECT	=	0.105 MILES
LENGTH STRUCTURE TIP PROJECT	=	0.019 MILES
TOTAL LENGTH TIP PROJECT	=	0.124 MILES

Prepared in the Office of Hatch Mott MacDonald for

DIVISION 7

NORTH CAROLINA DEPARTMENT OF TRANSPORTATION

2012 STANDARD SPECIFICATIONS

LETTING DATE:

TIM JORDAN, PE
PROJECT ENGINEER

DAVID FUH, PE
HYDRAULICS ENGINEER

NCDOT CONTACT: TIM POWERS, PE
DIVISION BRIDGE PROGRAM MANAGER

ROADWAY DESIGN ENGINEER

NORTH CAROLINA PROFESSIONAL SEAL 21102 ENGINEER TIMOTHY JAMES JORDAN

DocuSigned by: James Timothy Jordan
08E86A541473467...
SIGNATURE: P.E. 4/16/2015

HYDRAULICS ENGINEER

NORTH CAROLINA PROFESSIONAL SEAL 19732 ENGINEER SHUCHEN FUH

DocuSigned by: Shuchen Fuh
F14BC27598BE439...
SIGNATURE: P.E. 4/16/2015

PLANS PREPARED BY:

Hatch Mott MacDonald
PO Box 700
Fuquay-Varina, NC 27526
(919) 552-2253
(919) 552-2254 (Fax)
www.hatchmott.com
LICENSE NO. F-0669

ICA Engineering
5121 Kingdom Way, Suite 100
Raleigh, NC 27607
NC License No: F-0258

4/16/2015
8:41:13 AM
R:\Roadway\Proj\0000082_rdy_tsh.dgn
jo-6165

DocuSign Envelope ID: 8FD56319-8B4E-484F-855E-D771699D41AB

PROJECT REFERENCE	SHEET NO.
17BP.7.R.71 – ALAMANCE #82	1–A

ROADWAY DESIGN ENGINEER

NORTH CAROLINA PROFESSIONAL SEAL 21102 ENGINEER JAMES TIMOTHY MOTT

DocuSigned by:
4/16/2015

HATCH MOTT MACDONALD I & E, LLC
LICENSE NO. F-0669

Prepared in the Office of: Hatch Mott MacDonald P.O. Box 700 Fuquay-Varina, NC 27526 www.hatchmott.com

GENERAL NOTES:

2012 SPECIFICATIONS
EFFECTIVE: 01-17-12
REVISED: 07/30/12

GRADE LINE:
GRADING AND SURFACING:

THE GRADE LINES SHOWN DENOTE THE FINISHED ELEVATION OF THE PROPOSED SURFACING AT GRADE POINTS SHOWN ON THE TYPICAL SECTIONS. GRADE LINES MAY BE ADJUSTED AT THEIR BEGINNING AND ENDING AND AT STRUCTURES AS DIRECTED BY THE ENGINEER IN ORDER TO SECURE A PROPER TIE-IN.

CLEARING:

CLEARING ON THIS PROJECT SHALL BE PERFORMED TO THE LIMITS ESTABLISHED BY METHOD II.

SUPERELEVATION:

ALL CURVES ON THIS PROJECT SHALL BE SUPERELEVATED IN ACCORDANCE WITH STD. NO. 225.04 USING THE RATE OF SUPERELEVATION AND RUNOFF SHOWN ON THE PLANS. SUPERELEVATION IS TO BE REVOLVED ABOUT THE GRADE POINTS SHOWN ON THE TYPICAL SECTIONS.

SHOULDER CONSTRUCTION:

ASPHALT, EARTH, AND CONCRETE SHOULDER CONSTRUCTION ON THE HIGH SIDE OF SUPERELEVATED CURVES SHALL BE IN ACCORDANCE WITH STD. NO. 560.01.

GUARDRAIL:

THE GUARDRAIL LOCATIONS SHOWN ON THE PLANS MAY BE ADJUSTED DURING CONSTRUCTION AS DIRECTED BY THE ENGINEER. THE CONTRACTOR SHOULD CONSULT WITH THE ENGINEER PRIOR TO ORDERING GUARDRAIL MATERIAL.

SUBSURFACE PLANS:

NO SUBSURFACE PLANS ARE AVAILABLE ON THIS PROJECT. THE CONTRACTOR SHOULD MAKE HIS OWN INVESTIGATION AS TO THE SUBSURFACE CONDITIONS.

END BENTS:

THE ENGINEER SHALL CHECK THE STRUCTURE END BENT PLANS, DETAILS, AND CROSS-SECTION PRIOR TO SETTING OF THE SLOPE STAKES FOR THE EMBANKMENT OR EXCAVATION APPROACHING A BRIDGE.

UTILITIES:

UTILITY OWNER ON THIS PROJECT IS AT&T.

INDEX OF SHEETS

SHEET NUMBER	DESCRIPTION
1	TITLE SHEET
1-A	INDEX OF SHEETS, GENERAL NOTES, AND LIST OF STANDARD DRAWINGS
1-B	CONVENTIONAL SYMBOLS
2	PAVEMENT SCHEDULE AND TYPICAL SECTIONS
2-A	DETAIL FOR STRUCTURE ANCHOR UNITS
4	PLAN SHEET AND PROFILE SHEET
TMP-1 THRU TMP-3	TRAFFIC MANAGEMENT PLANS
EC-1 THRU EC-5	EROSION CONTROL PLANS
RF-1	REFORESTATION DETAIL SHEET
UO-1	UTILITIES BY OTHERS PLAN
X-1 THRU X-4	CROSS-SECTIONS
S-1 THRU S-15	STRUCTURE PLANS

EFF. 01-17-2012
REV. 10-30-2012

2012 ROADWAY ENGLISH STANDARD DRAWINGS

The following Roadway Standards as appear in "Roadway Standard Drawings" Highway Design Branch - N. C. Department of Transportation - Raleigh, N. C., Dated January, 2012 are applicable to this project and by reference hereby are considered a part of these plans:

STD.NO.	TITLE
DIVISION 2 - EARTHWORK	
200.02	Method of Clearing - Method II
225.02	Guide for Grading Subgrade - Secondary and Local
225.04	Method of Obtaining Superelevation - Two Lane Pavement
DIVISION 3 - PIPE CULVERTS	
300.01	Method of Pipe Installation
DIVISION 4 - MAJOR STRUCTURES	
422.11	Reinforced Bridge Approach Fills - Sub Regional Tier
DIVISION 5 - SUBGRADE, BASES AND SHOULDERS	
560.01	Method of Shoulder Construction - High Side of Superelevated Curve - Method I
DIVISION 8 - INCIDENTALS	
840.00	Concrete Base Pad for Drainage Structures
840.25	Anchorage for Frames - Brick or Concrete or Precast
840.29	Frames and Narrow Slot Flat Grates
840.35	Traffic Bearing Grated Drop Inlet - for Cast Iron Double Frame and Grates
840.46	Traffic Bearing Precast Drainage Structure
840.66	Drainage Structure Steps
846.01	Concrete Curb, Gutter and Curb & Gutter
846.04	Drop Inlet Installation in Shoulder Berm Gutter
862.01	Guardrail Placement
862.02	Guardrail Installation
876.01	Rip Rap in Channels
876.02	Guide for Rip Rap at Pipe Outlets
876.04	Drainage Ditches with Class 'B' Rip Rap

jor66165
R:\Roadway\Proj\0000082_rdy_pshiA.dgn
4/16/2015 8:41:15 AM

DocuSign Envelope ID: 8FD56319-8B4E-484F-855E-D771699D41AB

PROJECT REFERENCE	SHEET NO.
17BP.7.R.71 – ALAMANCE #82	1–B

Note: Not to Scale

****S.U.E. = Subsurface Utility Engineering***

STATE OF NORTH CAROLINA
DIVISION OF HIGHWAYS

CONVENTIONAL PLAN SHEET SYMBOLS

BOUNDARIES AND PROPERTY:

- State Line
- County Line
- Township Line
- City Line
- Reservation Line
- Property Line
- Existing Iron Pin — EIP
- Property Corner
- Property Monument — ECM
- Parcel/Sequence Number — 123
- Existing Fence Line
- Proposed Woven Wire Fence
- Proposed Chain Link Fence
- Proposed Barbed Wire Fence
- Existing Wetland Boundary — WLB
- Proposed Wetland Boundary — WLB
- Existing Endangered Animal Boundary — EAB
- Existing Endangered Plant Boundary — EPB
- Known Soil Contamination: Area or Site
- Potential Soil Contamination: Area or Site

BUILDINGS AND OTHER CULTURE:

- Gas Pump Vent or U/G Tank Cap
- Sign — S
- Well — W
- Small Mine
- Foundation
- Area Outline
- Cemetery
- Building
- School
- Church
- Dam

HYDROLOGY:

- Stream or Body of Water
- Hydro, Pool or Reservoir
- Jurisdictional Stream — JS
- Buffer Zone 1 — BZ 1
- Buffer Zone 2 — BZ 2
- Flow Arrow
- Disappearing Stream
- Spring
- Wetland
- Proposed Lateral, Tail, Head Ditch — FLOW
- False Sump

RAILROADS:

- Standard Gauge — CSX TRANSPORTATION
- RR Signal Milepost — MILEPOST 35
- Switch — SWITCH
- RR Abandoned
- RR Dismantled

RIGHT OF WAY:

- Baseline Control Point
- Existing Right of Way Marker
- Existing Right of Way Line
- Proposed Right of Way Line — RW
- Proposed Right of Way Line with Iron Pin and Cap Marker — RW
- Proposed Right of Way Line with Concrete or Granite R/W Marker — RW
- Proposed Control of Access Line with Concrete C/A Marker — CA
- Existing Control of Access — CA
- Proposed Control of Access — CA
- Existing Easement Line — E
- Proposed Temporary Construction Easement — E
- Proposed Temporary Drainage Easement — TDE
- Proposed Permanent Drainage Easement — PDE
- Proposed Permanent Drainage / Utility Easement — DUE
- Proposed Permanent Utility Easement — PUE
- Proposed Temporary Utility Easement — TUE
- Proposed Aerial Utility Easement — AUE
- Proposed Permanent Easement with Iron Pin and Cap Marker

ROADS AND RELATED FEATURES:

- Existing Edge of Pavement
- Existing Curb
- Proposed Slope Stakes Cut — C
- Proposed Slope Stakes Fill — F
- Proposed Curb Ramp — CR
- Existing Metal Guardrail
- Proposed Guardrail
- Existing Cable Guiderail
- Proposed Cable Guiderail
- Equality Symbol
- Pavement Removal

VEGETATION:

- Single Tree
- Single Shrub
- Hedge
- Woods Line
- Orchard
- Vineyard — Vineyard

EXISTING STRUCTURES:

MAJOR:

- Bridge, Tunnel or Box Culvert — CONC
- Bridge Wing Wall, Head Wall and End Wall — CONC WW

MINOR:

- Head and End Wall — CONC HW
- Pipe Culvert
- Footbridge
- Drainage Box: Catch Basin, DI or JB — CB
- Paved Ditch Gutter
- Storm Sewer Manhole — S
- Storm Sewer — S

UTILITIES:

POWER:

- Existing Power Pole
- Proposed Power Pole
- Existing Joint Use Pole
- Proposed Joint Use Pole
- Power Manhole — P
- Power Line Tower
- Power Transformer
- U/G Power Cable Hand Hole
- H-Frame Pole
- Recorded U/G Power Line — P
- Designated U/G Power Line (S.U.E.*) — P

TELEPHONE:

- Existing Telephone Pole
- Proposed Telephone Pole
- Telephone Manhole — T
- Telephone Booth
- Telephone Pedestal — T
- Telephone Cell Tower
- U/G Telephone Cable Hand Hole — HH
- Recorded U/G Telephone Cable — T
- Designated U/G Telephone Cable (S.U.E.*) — T
- Recorded U/G Telephone Conduit — TC
- Designated U/G Telephone Conduit (S.U.E.*) — TC
- Recorded U/G Fiber Optics Cable — T FO
- Designated U/G Fiber Optics Cable (S.U.E.*) — T FO

WATER:

- Water Manhole — W
- Water Meter
- Water Valve
- Water Hydrant
- Recorded U/G Water Line — W
- Designated U/G Water Line (S.U.E.*) — W
- Above Ground Water Line — A/G Water

TV:

- TV Satellite Dish
- TV Pedestal — C
- TV Tower
- U/G TV Cable Hand Hole — HH
- Recorded U/G TV Cable — TV
- Designated U/G TV Cable (S.U.E.*) — TV
- Recorded U/G Fiber Optic Cable — TV FO
- Designated U/G Fiber Optic Cable (S.U.E.*) — TV FO

GAS:

- Gas Valve
- Gas Meter
- Recorded U/G Gas Line — G
- Designated U/G Gas Line (S.U.E.*) — G
- Above Ground Gas Line — A/G Gas

SANITARY SEWER:

- Sanitary Sewer Manhole
- Sanitary Sewer Cleanout
- U/G Sanitary Sewer Line — SS
- Above Ground Sanitary Sewer — A/G Sanitary Sewer
- Recorded SS Forced Main Line — FSS
- Designated SS Forced Main Line (S.U.E.*) — FSS

MISCELLANEOUS:

- Utility Pole
- Utility Pole with Base
- Utility Located Object
- Utility Traffic Signal Box — S
- Utility Unknown U/G Line — ?UTL
- U/G Tank; Water, Gas, Oil
- Underground Storage Tank, Approx. Loc. — UST
- A/G Tank; Water, Gas, Oil
- Geoenvironmental Boring
- U/G Test Hole (S.U.E.*)
- Abandoned According to Utility Records — AATUR
- End of Information — E.O.I.

jor66165
R:\Roadway\Proj\0000082_rdy_psh1B.dgn
4/16/2015 8:41:17 AM

DocuSign Envelope ID: 8FD56319-8B4E-484F-855E-D771699D41AB

PROJECT REFERENCE	SHEET NO.
17BP.7.R.71 – ALAMANCE #82	2
ROADWAY DESIGN ENGINEER	HYDRAULICS ENGINEER

NORTH CAROLINA PROFESSIONAL SEAL 21102 ENGINEER JAMES TIMOTHY MOTSKO
Digitally signed by: James Timothy Motsko, PE
DN: cn=James Timothy Motsko, PE, o=Hatch Mott MacDonald, ou=Engineering, c=US
Date: 2015.04.16 08:41:19 -04'00'
4/16/2015
HATCH MOTT MACDONALD I & E, LLC
LICENSE NO. F-0669

Prepared in the Office of: Hatch Mott MacDonald P.O. Box 700 Fuquay-Varina, NC 27526 www.hatchmott.com

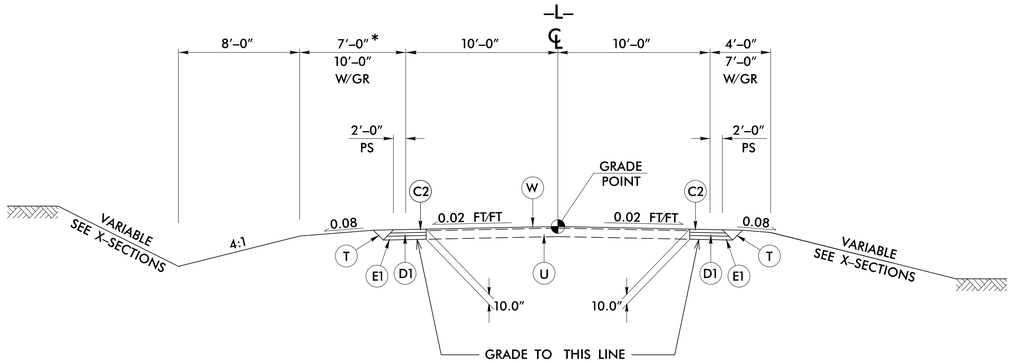

TYPICAL SECTION NO. 1

TRANSITION FROM EXISTING TO TYPICAL SECTION NO. 1:
–L– STA 13+00.00 TO 13+50.00

USE TYPICAL SECTION NO. 1:
–L– STA 13+50.00 TO 14+25.00
–L– STA 16+80.00 TO 18+00.00

TRANSITION FROM TYPICAL SECTION NO. 1 TO EXISTING:
–L– STA 18+00.00 TO 18+50.00

NOTE: OVERLAY EXISTING PAVEMENT WITH (C1) AS FOLLOWS:

–L– STA. 18+00.00 TO STA. 19+55.00
ADDITIONAL OVERLAY AREA AS SHOWN ON SHEET 4.

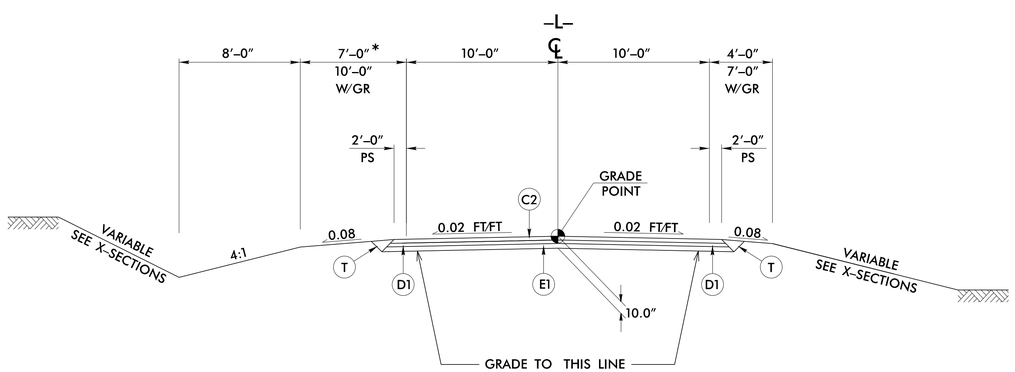

TYPICAL SECTION NO. 2

USE TYPICAL SECTION NO. 2:
–L– STA 14+25.00 TO 14+92.67 (BEGIN BRIDGE)
–L– STA 15+95.16 (END BRIDGE) TO 16+80.00

* STRUCTURE WIDENED ON LOW SIDE TO ACCOMMODATE HYDRAULIC SPREAD. ROADWAY SHOULDER WIDENED ON LOW SIDE ACCORDINGLY.

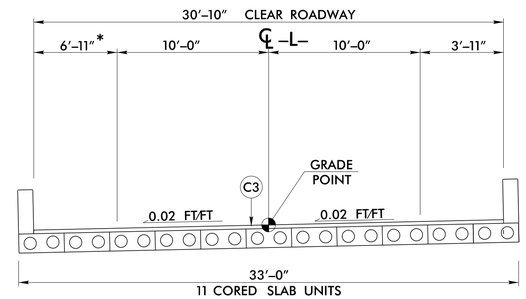

TYPICAL SECTION NO. 3

USE TYPICAL SECTION NO. 3:
–L– STA 14+92.67 (BEGIN BRIDGE) TO 15+95.16 (END BRIDGE)

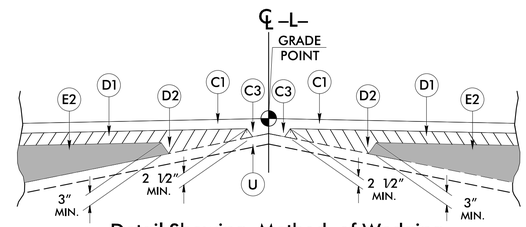

Detail Showing Method of Wedging

PAVEMENT SCHEDULE	
C1	PROP. APPROX. 1½″ ASPHALT CONCRETE SURFACE COURSE, TYPE S9.5B, AT AN AVERAGE RATE OF 168 LBS. PER SQ. YD.
C2	PROP. APPROX. 3″ ASPHALT CONCRETE SURFACE COURSE, TYPE S9.5B, AT AN AVERAGE RATE OF 168 LBS. PER SQ. YD. IN EACH OF TWO LAYERS.
C3	PROP. VAR. DEPTH ASPHALT CONCRETE SURFACE COURSE, TYPE S9.5B, AT AN AVERAGE RATE OF 112 LBS. PER SQ. YD. PER 1″ DEPTH. TO BE PLACED IN LAYERS NOT LESS THAN 1½″ IN DEPTH OR GREATER THAN 2″ IN DEPTH.
D1	PROP. APPROX. 3″ ASPHALT CONCRETE INTERMEDIATE COURSE, TYPE I19.0B, AT AN AVERAGE RATE OF 342 LBS. PER SQ. YD.
D2	PROP. VAR. DEPTH ASPHALT CONCRETE INTERMEDIATE COURSE, TYPE I19.0B, AT AN AVERAGE RATE OF 114 LBS. PER SQ. YD. PER 1″ DEPTH, TO BE PLACED IN LAYERS NOT LESS THAN 2½″ IN DEPTH OR GREATER THAN 4″ IN DEPTH.
E1	PROP. APPROX. 4″ ASPHALT CONCRETE BASE COURSE, TYPE B25.0B, AT AN AVERAGE RATE OF 456 LBS. PER SQ. YD.
E2	PROP. VAR. DEPTH ASPHALT CONCRETE BASE COURSE, TYPE B25.0B, AT AN AVERAGE RATE OF 114 LBS. PER SQ. YD. PER 1″ DEPTH TO BE PLACED IN LAYERS NOT LESS THAN 3″ IN DEPTH OR GREATER THAN 5½″ IN DEPTH.
T	EARTH MATERIAL.
U	EXISTING PAVEMENT.
W	WEDGING (SEE DETAIL SHOWING METHOD OF WEDGING).

NOTE: PAVEMENT EDGE SLOPES ARE 1:1 UNLESS SHOWN OTHERWISE.

jor66165
R:\Roadway\Proj\000082_rdy_typ.dgn
4/16/2015 8:41:19 AM

$$$$$SYSTIME$$$$
$$$$$$$$$$$$$$$$DGN$$$$$$$$$$$$$$$$
$$$USERNAME$$$

STATE OF
NORTH CAROLINA
DEPT. OF TRANSPORTATION
DIVISION OF HIGHWAYS
RALEIGH, N.C.

ENGLISH DETAIL DRAWING FOR
STRUCTURE ANCHOR UNITS
GUARDRAIL ANCHOR UNIT, TYPE III FOR ATTACHMENT TO
RAIL ON BRIDGE - SUB REGIONAL TIER

SHEET 2 OF 7
862d03

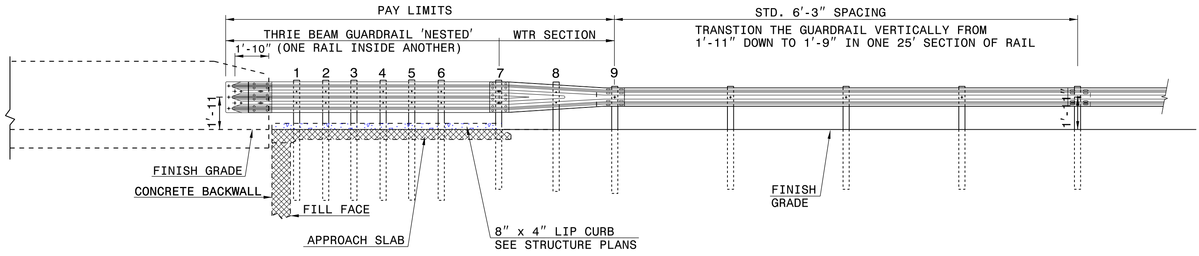

ELEVATION

NOTE:
- **POST NOT REQUIRED FOR SKEW ANGLES GREATER THAN 150° OR LESS THAN 30° UNLESS OTHERWISE DIRECTED BY THE ENGINEER.
- *THE DISTANCE FROM END OF BRIDGE RAIL TO CENTER LINE OF THE FIRST POST SHOULD BE 11½" IF CONCRETE BACKWALL IS NOT PRESENT.
- -SHOULDER BERM GUTTER MUST BE INSTALLED TO THE LIMITS 8" x 4" LIP CURB IS SHOWN IF ANCHOR UNIT IS NOT ADJACENT TO AN APPROACH SLAB.
- -MEASURE GUARDRAIL HEIGHT FROM THE TOP OF ADJACENT SURFACE (SHOULDER, BERM, OR GUTTER).
- -LAP JOINTS IN THE DIRECTION OF TRAFFIC FLOW.
- -SEE SHEET 5 FOR POST SECTIONS 1 THRU 9.

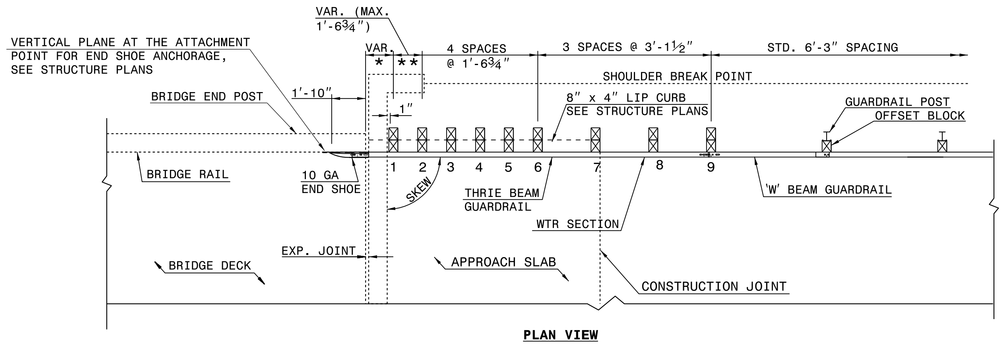

PLAN VIEW

GUARDRAIL ANCHOR UNIT, TYPE III FOR ATTACHMENT TO RAIL ON BRIDGE - SUB REGIONAL TIER

STATE OF
NORTH CAROLINA
DEPT. OF TRANSPORTATION
DIVISION OF HIGHWAYS
RALEIGH, N.C.

ENGLISH DETAIL DRAWING FOR
STRUCTURE ANCHOR UNITS
GUARDRAIL ANCHOR UNIT, TYPE III FOR ATTACHMENT TO
RAIL ON BRIDGE - SUB REGIONAL TIER

SHEET 2 OF 7
862d03

STATE OF
NORTH CAROLINA
DEPT. OF TRANSPORTATION
DIVISION OF HIGHWAYS
RALEIGH, N.C.

ENGLISH DETAIL DRAWING FOR
STRUCTURE ANCHOR UNITS
GUARDRAIL ANCHOR UNIT, TYPE III

SHEET 3 OF 7
862d03

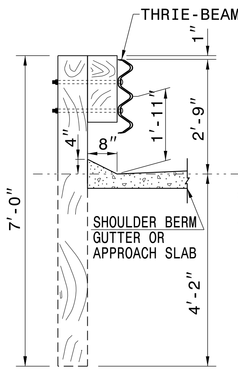

SECTION OF THRIE BEAM POSTS 1 THRU 6

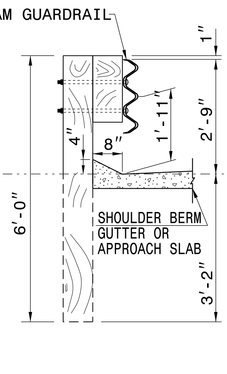

SECTION OF THRIE BEAM POST 7

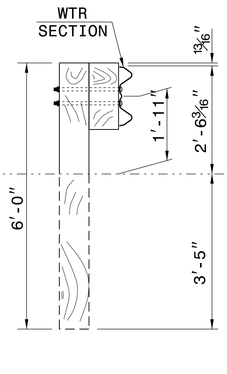

SECTION OF WTR BEAM POST 8

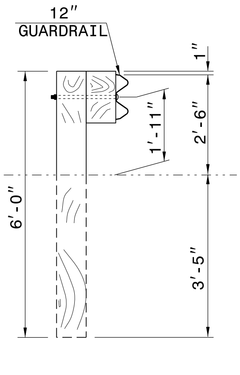

SECTION OF 'W' BEAM POST 9

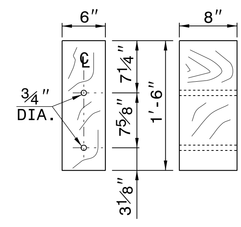

THRIE BEAM OFFSET BLOCK

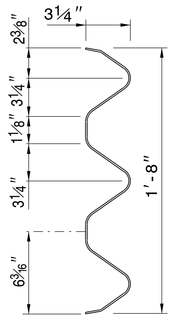

THRIE-BEAM SECTION

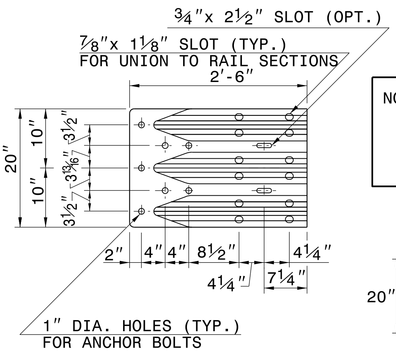

END SHOE

NOTE: THE MID POST AND OFFSET BLOCK OF THE WTR SECTION WILL REQUIRE SPECIAL BOLT HOLE DRILLING IN THE THRIE BEAM OFFSET BLOCK AND LINE POST.

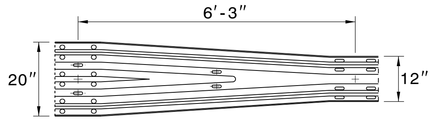

WTR SECTION
ELEVATION VIEW

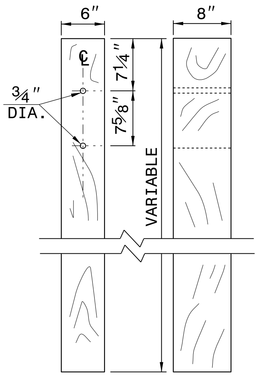

THRIE BEAM LINE POST

STATE OF
NORTH CAROLINA
DEPT. OF TRANSPORTATION
DIVISION OF HIGHWAYS
RALEIGH, N.C.

ENGLISH DETAIL DRAWING FOR
STRUCTURE ANCHOR UNITS
GUARDRAIL ANCHOR UNIT, TYPE III

SHEET 3 OF 7
862d03

CONTRACT STANDARDS AND DEVELOPMENT UNIT
Office 919-707-6950 FAX 919-250-4119

SEE TITLE BLOCK

ORIGINAL BY: J. HOWERTON DATE: 06-22-12
MODIFIED BY: DATE:
CHECKED BY: DATE:
FILE SPEC.:

PROJECT REFERENCE NO.
17BP.7.R.82 - CASWELL #53.2

SHEET NO.
2 - C

DocuSign Envelope ID: 8FD56319-8B4E-484F-855E-D771699D41AB

PROJECT REFERENCE	SHEET NO.
17BP.7.R.71 – ALAMANCE #82	4

ROADWAY DESIGN ENGINEER: NORTH CAROLINA PROFESSIONAL SEAL 21102 — JAMES TIMOTHY JOHNSON — 4/16/2015

HYDRAULICS ENGINEER: NORTH CAROLINA PROFESSIONAL SEAL 19732 — STEPHEN FIH — 4/16/2015

HATCH MOTT MACDONALD E & E, LLC LICENSE NO. F-0669

Prepared in the Office of: Hatch Mott MacDonald, PO Box 700, Fuquay-Varina, NC 27526, www.hatchmott.com

ICA Engineering, 5121 Kingdom Way, Suite 100, Raleigh, NC 27607, NC License No: P-0258

VERTICAL SCALE 5' 0 5' 10' — HORIZONTAL SCALE 25' 0 25' 50'

*DESIGN EXCEPTION:
MIN. HORIZONTAL CURVE RADIUS
SAG VERTICAL CURVE K
HORIZONTAL SSD
VERTICAL SSD
SUPERELEVATION

DRAINAGE NOTES:
MINIMUM SLOPE ON ALL PIPES IS 0.5%
DO NOT USE CONCRETE ON 15" DRAINAGE PIPE (401 TO 402)

NAD 83/NSRS 2011

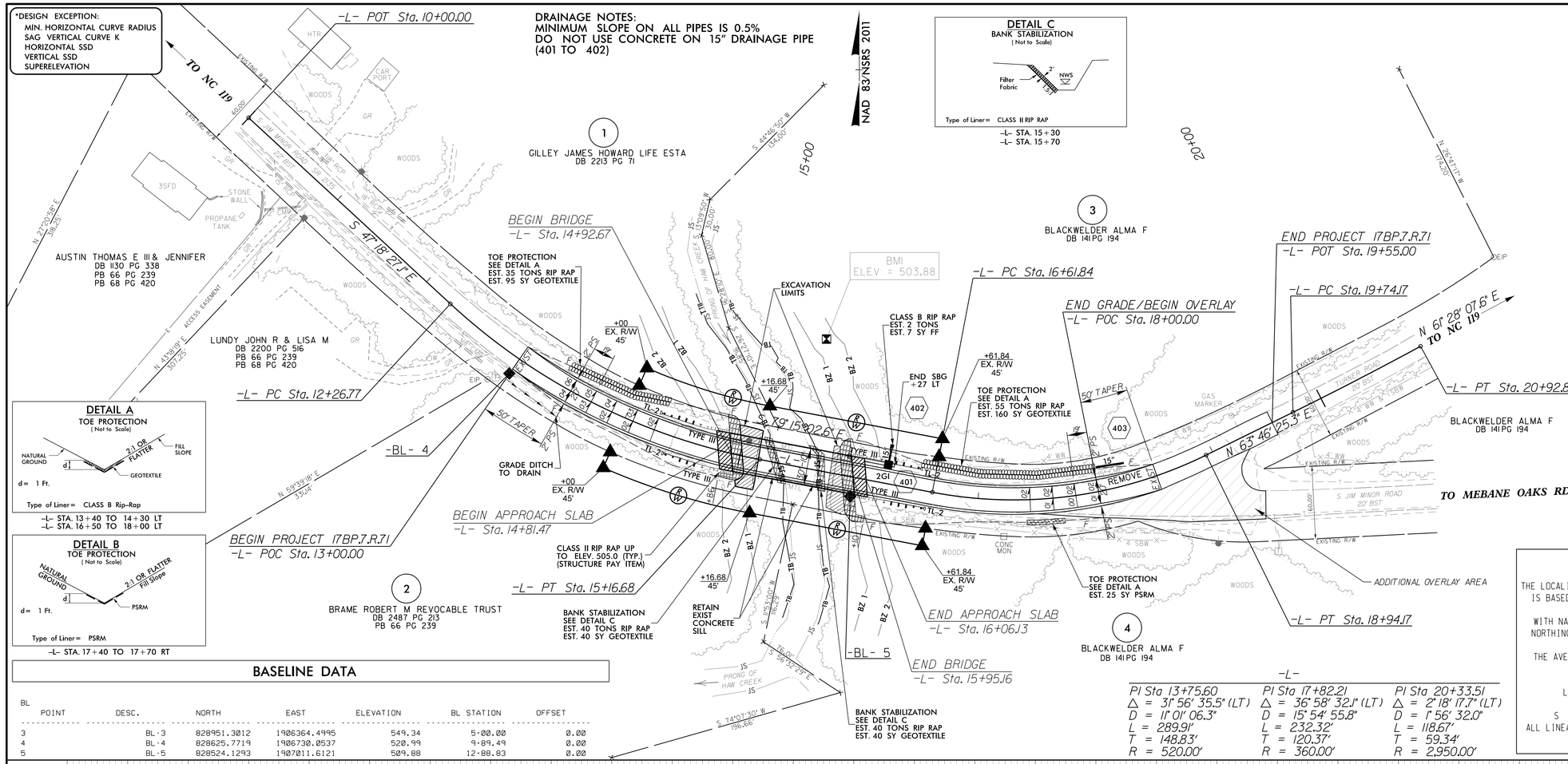

DETAIL A
TOE PROTECTION
(Not to Scale)

d = 1 Ft.
Type of Liner = CLASS B Rip-Rap
-L- STA. 13+40 TO 14+30 LT
-L- STA. 16+50 TO 18+00 LT

DETAIL B
TOE PROTECTION
(Not to Scale)

d = 1 Ft.
Type of Liner = PSRM
-L- STA. 17+40 TO 17+70 RT

DETAIL C
BANK STABILIZATION
(Not to Scale)

Type of Liner = CLASS II RIP RAP
-L- STA. 15+30
-L- STA. 15+70

BENCHMARK DATA

BM1 ELEVATION - 503.88
N 828654 E 1906992
BL STATION 12+26.01 16 LEFT
R/R SPIKE IN 24" SYCAMORE

BASELINE DATA

BL

POINT	DESC.	NORTH	EAST	ELEVATION	BL STATION	OFFSET
3	BL-3	828951.3012	1906364.4995	549.34	5+00.00	0.00
4	BL-4	828625.7719	1906730.0537	520.99	9+89.49	0.00
5	BL-5	828524.1293	1907011.6121	509.88	12+88.83	0.00

-L-

PI Sta 13+75.60	PI Sta 17+82.21	PI Sta 20+33.51
Δ = 31° 56' 35.5" (LT)	Δ = 36° 58' 32.1" (LT)	Δ = 2° 18' 17.7" (LT)
D = 11° 01' 06.3"	D = 15° 54' 55.8"	D = 1° 56' 32.0"
L = 289.91'	L = 232.32'	L = 118.67'
T = 148.83'	T = 120.37'	T = 59.34'
R = 520.00'	R = 360.00'	R = 2,950.00'

DATUM DESCRIPTION

THE LOCALIZED COORDINATE SYSTEM DEVELOPED FOR THIS PROJECT IS BASED ON THE STATE PLANE COORDINATES ESTABLISHED BY NCDOT FOR MONUMENT "00-0082-2"
WITH NAD 83/NSRS 2011 STATE PLANE GRID COORDINATES OF NORTHING: 829352.5800(ft) EASTING: 1906100.4740(ft)
ELEVATION: 553.52(ft)
THE AVERAGE COMBINED GRID FACTOR USED ON THIS PROJECT (GROUND TO GRID) IS: 0.9999426425
THE N.C. LAMBERT GRID BEARING AND LOCALIZED HORIZONTAL GROUND DISTANCE FROM "00-0082-2" TO -L- STATION 10+00 IS
S 38° 46' 59.28" E DISTANCE: 661.249 (ft.)
ALL LINEAR DIMENSIONS ARE LOCALIZED HORIZONTAL DISTANCES
VERTICAL DATUM USED IS NAVD 88

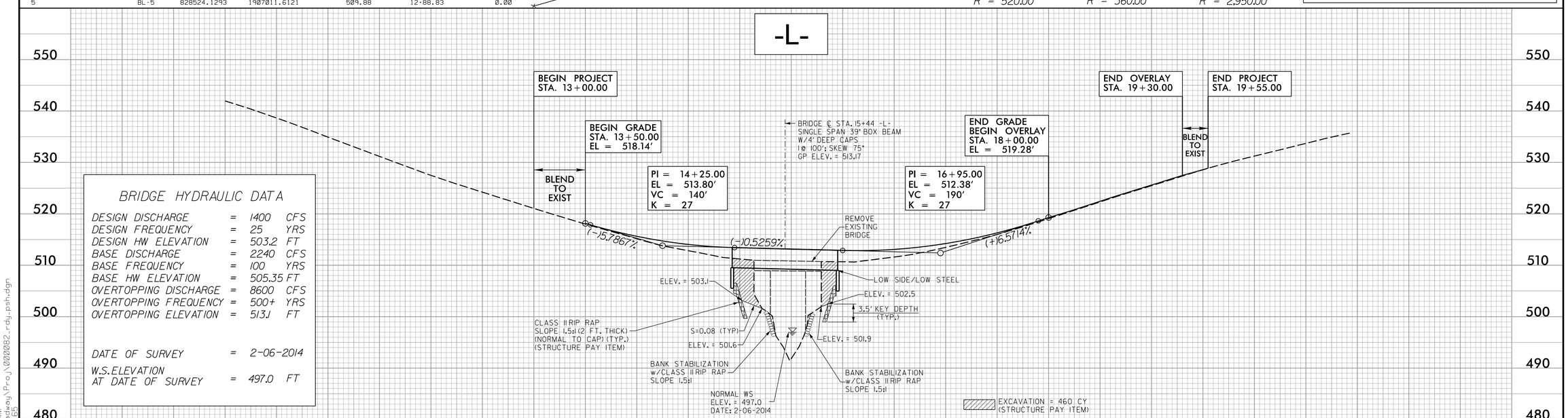

BRIDGE HYDRAULIC DATA

DESIGN DISCHARGE	=	1400	CFS
DESIGN FREQUENCY	=	25	YRS
DESIGN HW ELEVATION	=	503.2	FT
BASE DISCHARGE	=	2240	CFS
BASE FREQUENCY	=	100	YRS
BASE HW ELEVATION	=	505.35	FT
OVERTOPPING DISCHARGE	=	8600	CFS
OVERTOPPING FREQUENCY	=	500+	YRS
OVERTOPPING ELEVATION	=	513.1	FT
DATE OF SURVEY	=	2-06-2014	
W.S. ELEVATION AT DATE OF SURVEY	=	497.0	FT

4/16/2015
8:41:21 AM
R:\Roadway\Proj\0000082_rdy_psh.dgn
jor6615

DocuSign Envelope ID: C5A2F155-919D-4247-B8D5-DC83B7A5F71E

PROJECT REFERENCE	SHEET NO.
17BP.7.R.71 – ALAMANCE #82	TMP–3

TRAFFIC ENGINEER

NORTH CAROLINA PROFESSIONAL SEAL 023488 ENGINEER

DocuSigned by: Nicholas K. Phillips
4/16/2018

HATCH MOTT MACDONALD I & E, LLC
LICENSE NO. F-0669

Prepared in the Office of: Hatch Mott MacDonald P.O. Box 700 Fuquay-Varina, NC 27526 www.hatchmott.com

SIGN NUMBER: SD-1
TYPE: STATIONARY
QUANTITY: SEE PLANS

SIGN WIDTH: 3′-0″
HEIGHT: 3′-6″
TOTAL AREA: 10.5 Sq.Ft.

BORDER TYPE: INSET
RECESS: 0.47″
WIDTH: 0.63″
RADII: 1.5″

NO. Z BARS:
LENGTH:

BACKG COLOR: Fluorescent Orange
COPY COLOR: Black

SYMBOL	X	Y	WID	HT

MAT'L: 0.080″ (2.0 mm) ALUMINUM

DESIGN BY: BLP
PROJECT ID: 17BP.7.R.71
CHECKED BY: NKP
DIV: DIV 7
DATE: Jan 27, 2014

USE NOTES: 1,2

1. Legend and border shall be direct applied black non-reflective sheeting.
2. Background shall be NC GRADE B fluoresent orange retroreflective sheeting.

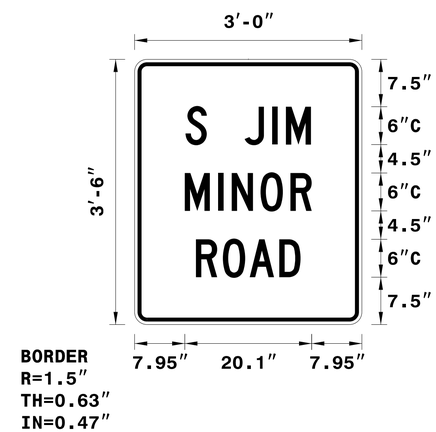

Spacing Factor is 1 unless specified otherwise

LETTER POSITIONS

Letter locations are panel edge to lower left corner

						Series/Size Text Length
	S	J	I	M		C 2000
	8.1	11.4	17.4	21.8	24	19.9
	M	I	N	O	R	C 2000
	8	13.2	15.4	20	24.7	20.1
	R	O	A	D		C 2000
	9.7	14	18.2	22.9		16.6

FILENAME: 000082_rdy_tmp3

NORTH CAROLINA D.O.T. SIGN DETAIL

jor66165
R:\Roadway\Proj\000082_rdy_tmp3.dgn
4/16/2015 8:42:36 AM

DocuSign Envelope ID: C5A2F155-919D-4247-B8D5-DC83B7A5F71E

PROJECT REFERENCE	SHEET NO.
17BP.7.R.71 – ALAMANCE #82	TMP–1

ROADWAY DESIGN ENGINEER

NORTH CAROLINA PROFESSIONAL SEAL 21102 ENGINEER JAMES TIMOTHY MORGAN

Digitally signed by: James Timothy Morgan
DN: cn=James Timothy Morgan, o=Hatch Mott MacDonald, ou=Transportation, c=US
Date: 2021.04.16 15:41:24 -04'00'
4/16/2021

HATCH MOTT MACDONALD J & E, LLC
LICENSE NO. F–0669

Prepared in the Office of: Hatch Mott MacDonald P0 Box 700 Fuquay-Varina, NC 27526 www.hatchmott.com

THE FOLLOWING ROADWAY STANDARDS AS APPEAR IN "ROADWAY STANDARD DRAWINGS" – HIGHWAY DESIGN BRANCH– N.C. DEPARTMENT OF TRANSPORTATION – RALEIGH, N.C., DATED JANUARY 2012 ARE APPLICABLE TO THIS PROJECT AND BY REFERENCE HEREBY ARE CONSIDERED A PART OF THESE PLANS:

STD.	TITLE
1101.03	TEMPORARY ROAD CLOSURES
1110.01	STATIONARY WORK ZONE SIGNS
1145.01	BARRICADES
1205.01	PAVEMENT MARKINGS – LINE TYPES AND OFFSETS
1205.02	PAVEMENT MARKINGS – TWO–LANE AND MULTI–LANE ROADWAYS
1205.04	PAVEMENT MARKINGS – INTERSECTIONS
1205.12	PAVEMENT MARKINGS – BRIDGES
1261.01	GUARDRAIL AND BARRIER DELINEATORS – INSTALLATION SPACING
1261.02	GUARDRAIL AND BARRIER DELINEATORS – TYPES AND MOUNTING
1262.01	GUARDRAIL END DELINEATION

GENERAL NOTES

CHANGES MAY BE REQUIRED WHEN PHYSICAL DIMENSIONS IN THE DETAIL DRAWINGS, STANDARD DETAILS, AND ROADWAY DETAILS ARE NOT ATTAINABLE TO MEET FIELD CONDITIONS OR RESULT IN DUPLICATE OR UNDESIRED OVERLAPPING OF DEVICES. MODIFICATION MAY INCLUDE: MOVING, SUPPLEMENTING, COVERING, OR REMOVAL OF DEVICES AS DIRECTED BY THE ENGINEER.

THE FOLLOWING GENERAL NOTES APPLY AT ALL TIMES FOR THE DURATION OF THE CONSTRUCTION PROJECT EXCEPT WHEN OTHERWISE NOTED IN THE PLAN OR DIRECTED BY THE ENGINEER.

TRAFFIC PATTERN ALTERATIONS

A) NOTIFY THE ENGINEER TWENTY ONE (21) CALENDAR DAYS PRIOR TO ANY TRAFFIC PATTERN ALTERATION.

SIGNING

B) PROVIDE PERMANENT SIGNING.

C) PROVIDE SIGNING AND DEVICES REQUIRED TO CLOSE THE ROAD ACCORDING TO THE ROADWAY STANDARD DRAWINGS AND TRAFFIC CONTROL PLANS.

PROVIDE SIGNING REQUIRED FOR THE OFF–SITE DETOUR ROUTE AS SHOWN IN THE TRAFFIC CONTROL PLANS.

D) COVER OR REMOVE ALL SIGNS AND DEVICES REQUIRED TO CLOSE THE ROAD WHEN ROAD CLOSURE IS NOT IN OPERATION.

COVER OR REMOVE ALL SIGNS REQUIRED FOR THE OFF–SITE DETOUR WHEN THE DETOUR IS NOT IN OPERATION.

E) ENSURE ALL NECESSARY SIGNING IS IN PLACE PRIOR TO ALTERING ANY TRAFFIC PATTERN.

TRAFFIC CONTROL DEVICES

F) PLACE TYPE III BARRICADES, WITH "ROAD CLOSED" SIGN R11–2 ATTACHED, OF SUFFICIENT LENGTH TO CLOSE ENTIRE ROADWAY.

PAVEMENT MARKINGS AND MARKERS

G) INSTALL PAVEMENT MARKINGS ON THE FINAL SURFACE.

PHASING

STEP 1: USING ROADWAY STANDARD DRAWING NUMBER 1101.03, SHEET 1 OF 9, AND SHEET TMP–2, PERFORM THE FOLLOWING:
– INSTALL ALL ROAD CLOSURE AND DETOUR SIGNING INCLUDING BARRICADES
– CLOSE SR 2135 (S JIM MINOR RD)
– PLACE TRAFFIC ONTO OFF– SITE DETOUR

STEP 2: REMOVE EXISTING BRIDGE #82 AND CONSTRUCT THE PROPOSED BRIDGE AND APPROACHES AS SHOWN IN THE CONSTRUCTION PLANS.

STEP 3: INSTALL FINAL PAVEMENT MARKINGS.

STEP 4: REMOVE ALL TRAFFIC CONTROL SIGNING AND DEVICES AND RE–OPEN CLOSE SR 2135 (S JIM MINOR RD) TO THE FINAL TRAFFIC PATTERN.

PAVEMENT MARKING

PAINT 2FT.–6FT./SP WHITE MINISKIP (4")	105	LF
PAINT WHITE EDGELINE (4")	2,739	LF
PAINT YELLOW DOUBLE CENTER (4")	2,580	LF

NOTE: QUANTITY INCLUDES 2 APPLICATIONS OF EACH

NOTE: YELLOW DOUBLE CENTER (4") SHALL BE PLACED AT GRADE POINT OF ROADWAY AND BRIDGE AS SHOWN ON SHEET 2. THE GRADE POINT IS IN THE CENTER OF THE ROADWAY, HOWEVER, THE GRADE POINT IS NOT IN THE CENTER OF THE BRIDGE. WHITE EDGELINE SHALL BE PLACED TEN FEET FROM GRADE POINT OF THE ROADWAY AND BRIDGE AS SHOWN ON SHEET 2.

jor66165
R:\Roadway\Proj\0000082_rdy_tmp.dgn
4/16/2015 8:41:24 AM

DocuSign Envelope ID: C5A2F155-919D-4247-B8D5-DC83B7A5F71E

PROJECT REFERENCE	SHEET NO.
17BP.7.R.71 – ALAMANCE #82	TMP–2

ROADWAY DESIGN ENGINEER

NORTH CAROLINA PROFESSIONAL SEAL 21102 ENGINEER

Digitally signed by: JAMES TIMOTHY FOWLER, P.E., DIGITAL SIGNATURE

4/16/2015

HATCH MOTT MACDONALD I & E, LLC
LICENSE NO. F-0669

Prepared in the Office of: Hatch Mott MacDonald P.O. Box 700 Fuquay-Varina, NC 27526 www.hatchmott.com

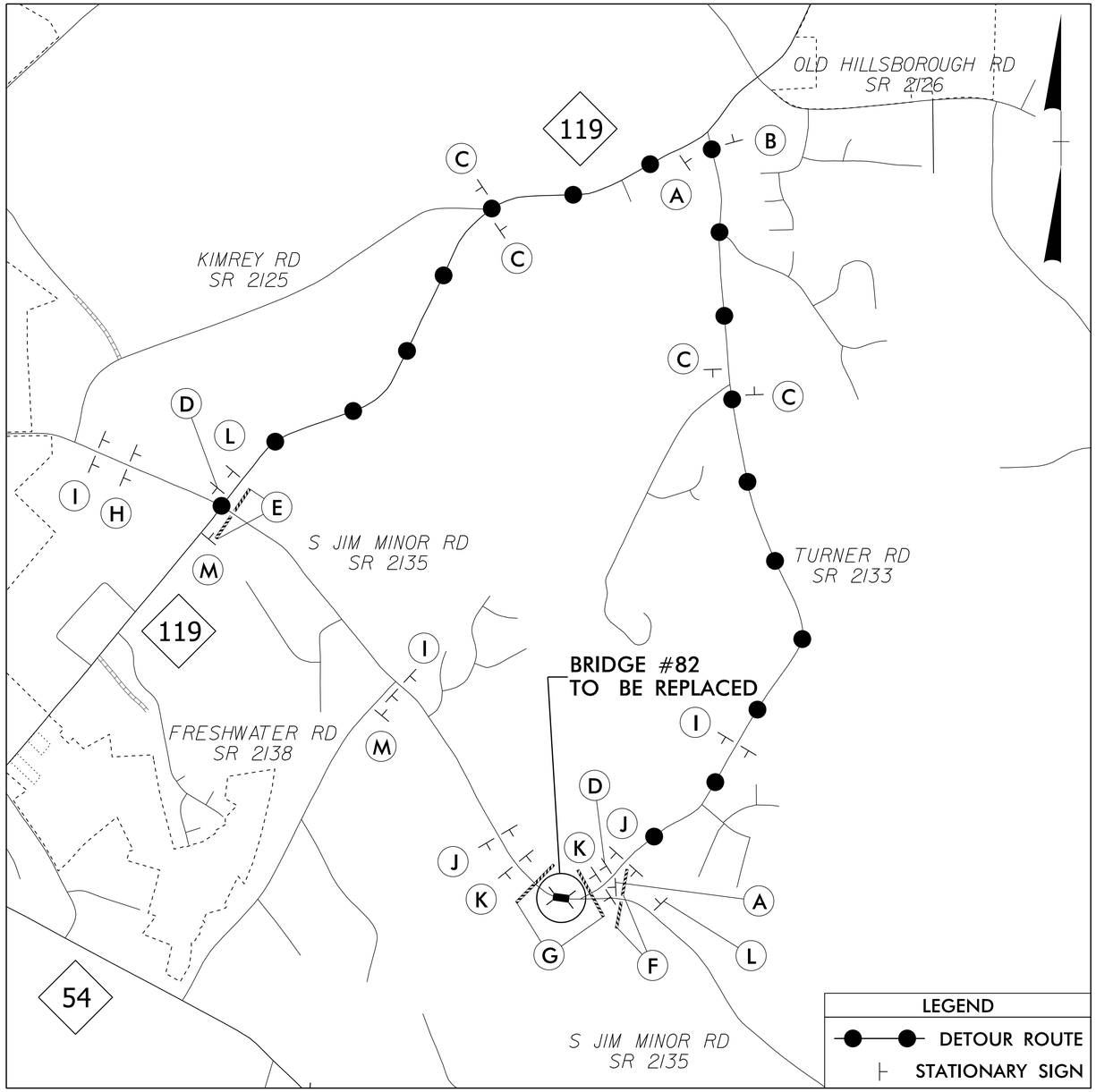

✱ SEE SHEET TMP–3 FOR SPECIAL SIGN DESIGNS

✱ S JIM MINOR ROAD
DETOUR
M4–8 24″ X 12″
M6–1 R 21″ X 15″
(A)

✱ S JIM MINOR ROAD
DETOUR
M4–8 24″ X 12″
M6–1 L 21″ X 15″
(B)

✱ S JIM MINOR ROAD
DETOUR
M4–8 24″ X 12″
M6–3 21″ X 15″
(C)

END DETOUR
M4–8 A 24″ X 18″
(D)

R11-4 60″ x 30″
ROAD CLOSED TO THRU TRAFFIC
DETOUR
M4-10L 48″ x 18″
TYPE III BARRICADE
(E)

R11-4 60″ x 30″
ROAD CLOSED TO THRU TRAFFIC
DETOUR
M4-10R 48″ x 18″
TYPE III BARRICADE
(F)

R11-2 48″ x 30″
ROAD CLOSED
TYPE III BARRICADE(S)
(G)

DETOUR AHEAD
W20–2 48″ X 48″
(H)

ROAD CLOSED AHEAD
W20–3 48″ X 48″
(I)

ROAD CLOSED 1000 FT
W20–3 48″ X 48″
(J)

ROAD CLOSED 500 FT
W20–3 48″ X 48″
(K)

ROAD CLOSED AHEAD
W20–3 48″ X 48″
NEXT LEFT
SP–4L 42″ X 12″
(L)

ROAD CLOSED AHEAD
W20–3 48″ X 48″
NEXT RIGHT
SP–4R 42″ X 12″
(M)

jo-66165
R:\Roadway\Proj\0000082_rdy_tmp.dgn
4/16/2015 8:41:24 AM

STATE	STATE PROJECT REFERENCE NO.	SHEET NO.	TOTAL SHEETS
N.C.	17BP.7.R.71	EC-1	

STATE PROJ. NO.	F.A. PROJ. NO.	DESCRIPTION

STATE OF NORTH CAROLINA
DIVISION OF HIGHWAYS

PLAN FOR PROPOSED
HIGHWAY EROSION CONTROL

ALAMANCE COUNTY

BRIDGE NO. 82 ON SR 2135
OVER PRONG OF HAW CREEK

17BP.7.R.71

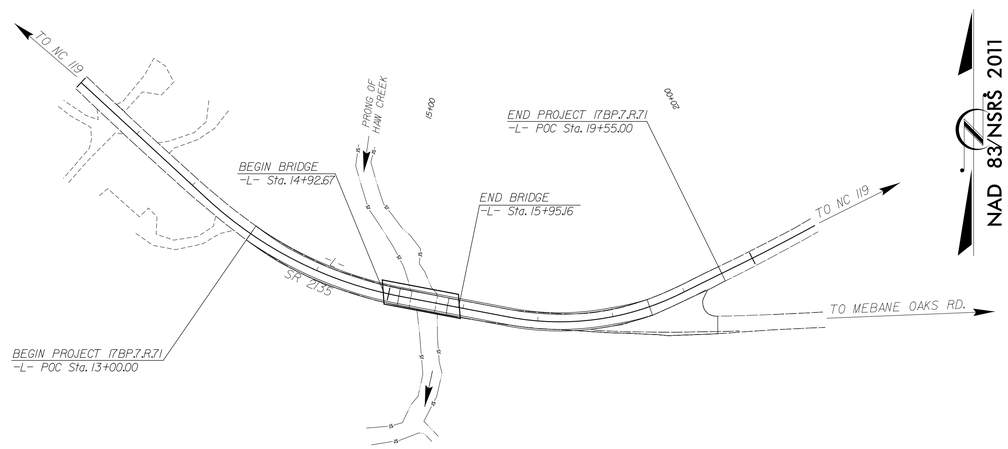

EROSION AND SEDIMENT CONTROL MEASURES

Std. #	Description	Symbol
1630.03	Temporary Silt Ditch	TSD
1630.05	Temporary Diversion	TD
1605.01	Temporary Silt Fence	
1606.01	Special Sediment Control Fence	
1622.01	Temporary Berms and Slope Drains	
1630.02	Silt Basin Type B	
1633.01	Temporary Rock Silt Check Type-A	
	Temporary Rock Silt Check Type-A with Matting and Polyacrylamide (PAM)	
1633.02	Temporary Rock Silt Check Type-B	
	Wattle/ Coir Fiber Wattle	
	Wattle/ Coir Fiber Wattle with Polyacrylamide (PAM)	
1634.01	Temporary Rock Sediment Dam Type-A	
1634.02	Temporary Rock Sediment Dam Type-B	
1635.01	Rock Pipe Inlet Sediment Trap Type-A	
1635.02	Rock Pipe Inlet Sediment Trap Type-B	
1630.04	Stilling Basin	
1630.06	Special Stilling Basin	
	Rock Inlet Sediment Trap:	
1632.01	Type A	A
1632.02	Type B	B
1632.03	Type C	C
	Skimmer Basin	
	Tiered Skimmer Basin	
	Infiltration Basin	

THIS PROJECT CONTAINS EROSION CONTROL PLANS FOR CLEARING AND GRUBBING PHASE OF CONSTRUCTION.

ENVIRONMENTALLY SENSITIVE AREA(S) EXIST ON THIS PROJECT

Refer To E. C. Special Provisions for Special Considerations.

THIS PROJECT HAS BEEN DESIGNED TO SENSITIVE WATERSHED STANDARDS.

ICA Engineering
5121 Kingdom Way,
Suite 100
Raleigh, NC 27607
NC License No: F-0258

GRAPHIC SCALE

25 0 50
PLANS

25 0 50
PROFILE (HORIZONTAL)

5 0 10
PROFILE (VERTICAL)

ROADSIDE ENVIRONMENTAL UNIT
DIVISION OF HIGHWAYS
STATE OF NORTH CAROLINA

LEVEL III CERTIFIED BY:
ALEXANDER SNIDER, P.E.
CERTIFICATION NUMBER: 3064
ISSUED: AUGUST 1, 2014

THESE EROSION AND SEDIMENT CONTROL PLANS COMPLY WITH THE REGULATIONS SET FORTH BY THE NCG-010000 GENERAL CONSTRUCTION PERMIT EFFECTIVE AUGUST 3, 2011 ISSUED BY THE NORTH CAROLINA DEPARTMENT OF ENVIRONMENT AND NATURAL RESOURCES DIVISION OF WATER QUALITY.

Prepared in the Office of:

ICA ENGINEERING
5121 KINGDOM WAY, SUITE 100
RALEIGH NC 27607
NC License No: F-0258

2012 STANDARD SPECIFICATIONS

Roadway Standard Drawings

The following roadway english standards as appear in "Roadway Standard Drawings"– Roadway Design Unit – N. C. Department of Transportation – Raleigh, N. C., dated January 2012 and the latest revison thereto are applicable to this project and by reference hereby are considered a part of these plans.

1604.01	Railroad Erosion Control Detail	1632.01	Rock Inlet Sediment Trap Type A
1605.01	Temporary Silt Fence	1632.02	Rock Inlet Sediment Trap Type B
1606.01	Special Sediment Control Fence	1632.03	Rock Inlet Sediment Trap Type C
1607.01	Gravel Construction Entrance	1633.01	Temporary Rock Silt Check Type A
1622.01	Temporary Berms and Slope Drains	1633.02	Temporary Rock Silt Check Type B
1630.01	Riser Basin	1634.01	Temporary Rock Sediment Dam Type A
1630.02	Silt Basin Type B	1634.02	Temporary Rock Sediment Dam Type B
1630.03	Temporary Silt Ditch	1635.01	Rock Pipe Inlet Sediment Trap Type A
1630.04	Stilling Basin	1635.02	Rock Pipe Inlet Sediment Trap Type B
1630.05	Temporary Diversion	1640.01	Coir Fiber Baffle
1630.06	Special Stilling Basin	1645.01	Temporary Stream Crossing
1631.01	Matting Installation		

8/1/2014
ulics\Engineering\Roadway\BMU-0000082_hyd_erosion_title.dgn

PROJECT REFERENCE NO.	SHEET NO.
17BP.7.R.71	EC-2

WATTLE WITH POLYACRYLAMIDE (PAM) DETAIL

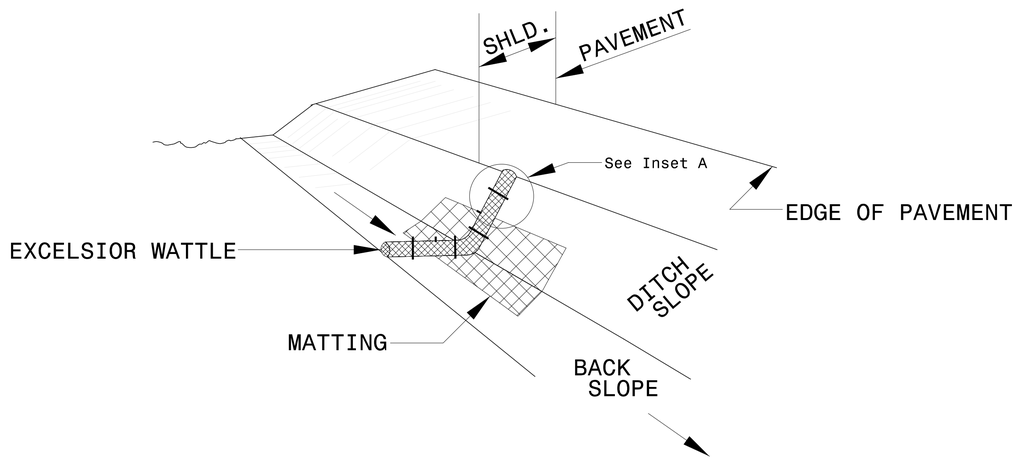

ISOMETRIC VIEW

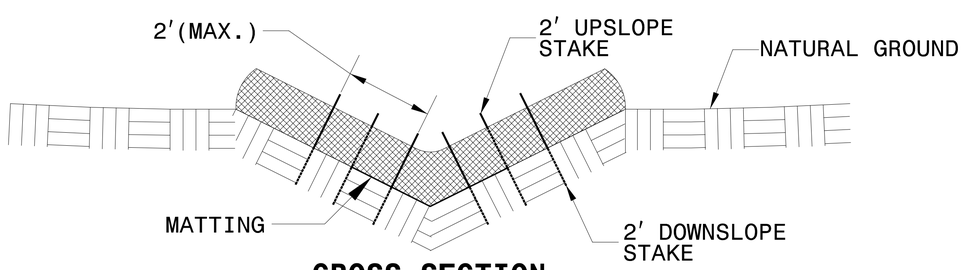

CROSS SECTION VEE DITCH

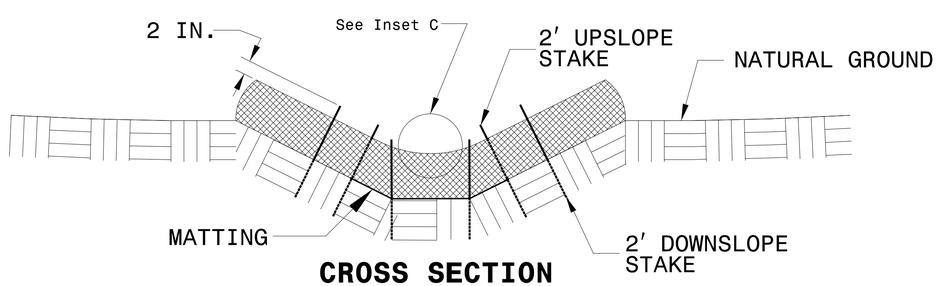

CROSS SECTION TRAPEZOIDAL DITCH

NOTES:

USE MINIMUM 12 IN. DIAMETER EXCELSIOR WATTLE.

USE 2 FT. WOODEN STAKES WITH A 2 IN. BY 2 IN. NOMINAL CROSS SECTION.

ONLY INSTALL WATTLE(S) TO A HEIGHT IN DITCH SO FLOW WILL NOT WASH AROUND WATTLE AND SCOUR DITCH SLOPES AND AS DIRECTED.

INSTALL A MINIMUM OF 2 UPSLOPE STAKES AND 4 DOWNSLOPE STAKES AT AN ANGLE TO WEDGE WATTLE TO BOTTOM OF DITCH.

PROVIDE STAPLES MADE OF 0.125 IN. DIAMETER STEEL WIRE FORMED INTO A U SHAPE NOT LESS THAN 12" IN LENGTH.

INSTALL STAPLES APPROXIMATELY EVERY 1 LINEAR FOOT ON BOTH SIDES OF WATTLE AND AT EACH END TO SECURE IT TO THE SOIL.

INSTALL MATTING IN ACCORDANCE WITH SECTION 1631 OF THE STANDARD SPECIFICATIONS.

PRIOR TO POLYACRYLAMIDE (PAM) APPLICATION, OBTAIN A SOIL SAMPLE FROM PROJECT LOCATION, AND FROM OFFSITE MATERIAL, AND ANALYZE FOR APPROPRIATE PAM FLOCCULANT TO BE APPLIED TO EACH WATTLE.

INITIALLY APPLY 2 OUNCES OF ANIONIC OR NEUTRALLY CHARGED PAM OVER WATTLE WHERE WATER WILL FLOW AND 1 OUNCE OF PAM ON MATTING ON EACH SIDE OF WATTLE. REAPPLY PAM AFTER EVERY RAINFALL EVENT THAT IS EQUAL TO OR EXCEEDS 0.50 IN.

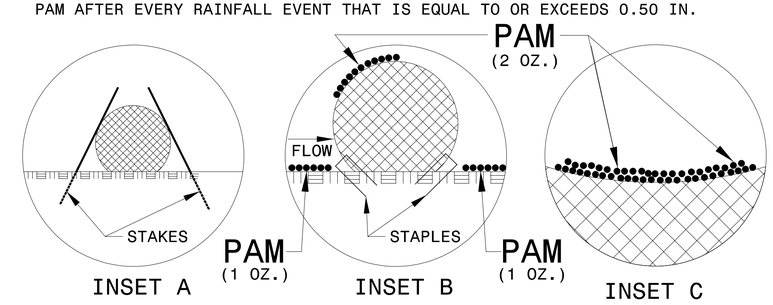

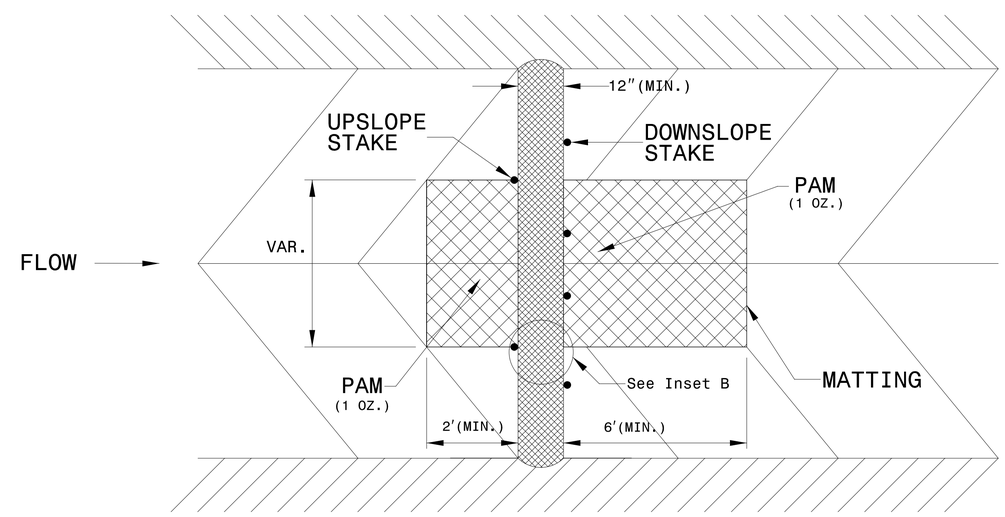

TOP VIEW

PROJECT REFERENCE NO.	SHEET NO.
17BP.7.R.71	EC-2A

TEMPORARY ROCK SILT CHECK TYPE 'A' WITH EXCELSIOR MATTING AND POLYACRYLAMIDE (PAM)

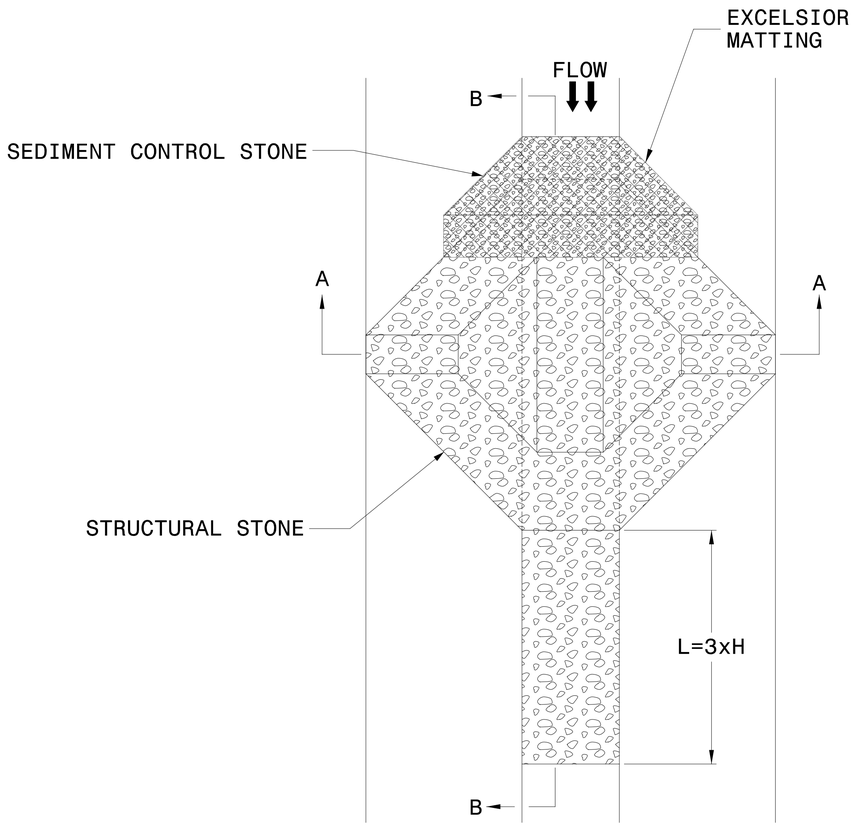

PLAN

NOTES

USE EXCELSIOR FOR MATTING MATERIAL AND ANCHOR MATTING SECTION AT TOP AND BOTTOM WITH CLASS B STONE.

PRIOR TO POLYACRYLAMIDE (PAM) APPLICATION, OBTAIN A SOIL SAMPLE FROM PROJECT LOCATION, AND FROM OFFSITE MATERIAL, AND ANALYZE FOR APPROPRIATE PAM FLOCCULANT TO BE APPLIED TO EACH ROCK SILT CHECK.

INITIALLY APPLY 3.5 OUNCES OF POLYACRYLAMIDE (PAM) TO TOP OF MATTING SECTION AND AFTER EVERY RAINFALL EVENT THAT EQUALS OR EXCEEDS 0.50 INCHES.

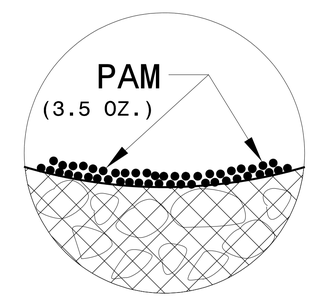

INSET A

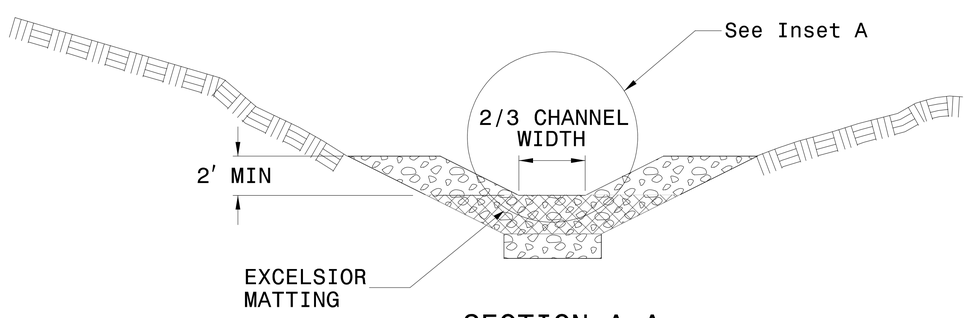

SECTION A-A

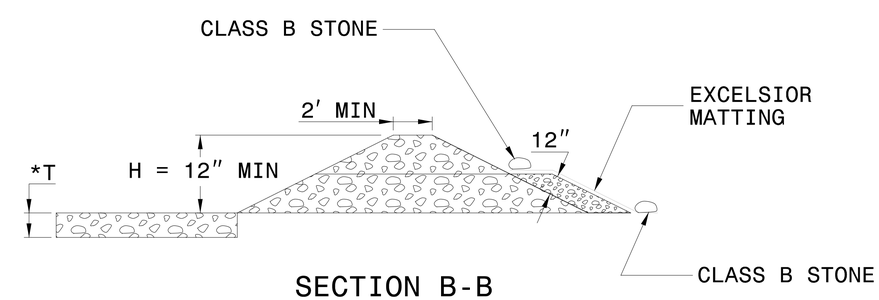

SECTION B-B

*T = 12" MIN., 18" MAX.

NOT TO SCALE

PROJECT REFERENCE NO.	SHEET NO.
17BP.7.R.71	EC-3

DIVISION OF HIGHWAYS
STATE OF NORTH CAROLINA

SOIL STABILIZATION TIMEFRAMES

SITE DESCRIPTION	STABILIZATION TIME	TIMEFRAME EXCEPTIONS
PERIMETER DIKES, SWALES, DITCHES AND SLOPES	7 DAYS	NONE
HIGH QUALITY WATER (HQW) ZONES	7 DAYS	NONE
SLOPES STEEPER THAN 3:1	7 DAYS	IF SLOPES ARE 10' OR LESS IN LENGTH AND ARE NOT STEEPER THAN 2:1, 14 DAYS ARE ALLOWED.
SLOPES 3:1 OR FLATTER	14 DAYS	7 DAYS FOR SLOPES GREATER THAN 50' IN LENGTH.
ALL OTHER AREAS WITH SLOPES FLATTER THAN 4:1	14 DAYS	NONE, EXCEPT FOR PERIMETERS AND HQW ZONES.

5/14/99

GRAPHIC SCALE
50 0 50 100

PROJECT REFERENCE NO.	SHEET NO.
17BP.7.R.71	EC-4/CONST.4
R/W SHEET NO.	
ROADSIDE ENVIRONMENTAL PROJECT ENGINEER	

LEVEL III CERTIFIED BY:
ALEXANDER SNIDER, P.E.
CERTIFICATION NUMBER: 3064
ISSUED: AUGUST 1, 2014

CLEARING AND GRUBBING
EROSION CONTROL FOR
CONSTRUCTION SHEET 4

NC GRID
NAD 83 NA 2011

DRAINAGE NOTES:
MINIMUM SLOPE ON ALL PIPES IS 0.5%
DO NOT USE CONCRETE ON 15" DRAINAGE PIPE
(401 TO 402)

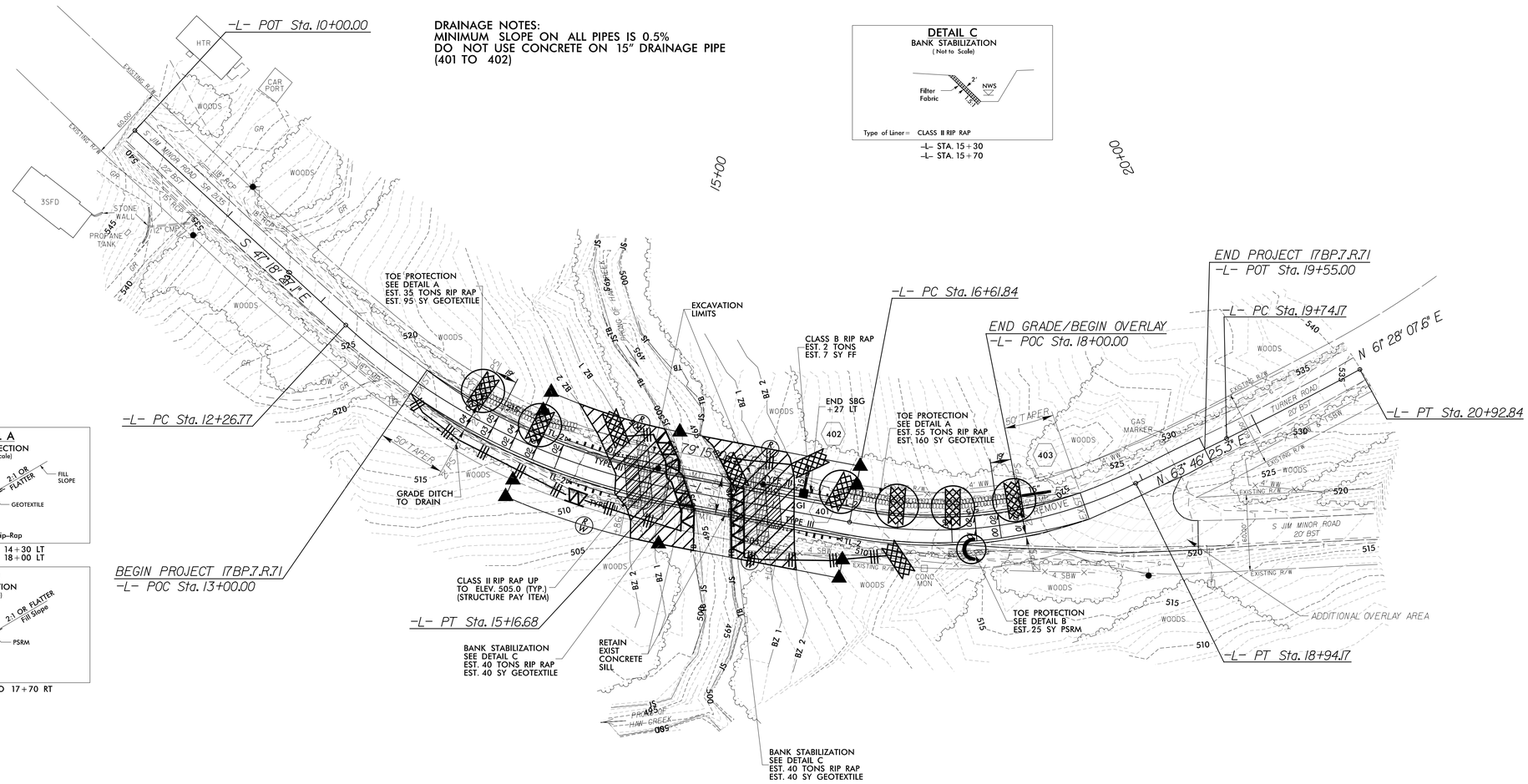

DETAIL C
BANK STABILIZATION
(Not to Scale)

Type of Liner = CLASS II RIP RAP
-L- STA. 15+30
-L- STA. 15+70

DETAIL A
TOE PROTECTION
(Not to Scale)

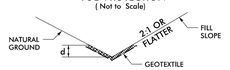

d = 1 Ft.
Type of Liner = CLASS B Rip-Rap
-L- STA. 13+40 TO 14+30 LT
-L- STA. 16+50 TO 18+00 LT

DETAIL B
TOE PROTECTION
(Not to Scale)

d = 1 Ft.
Type of Liner = PSRM
-L- STA. 17+40 TO 17+70 RT

NOTE:
ALL EROSION CONTROL DEVICES SHOWN ARE LOCATED WITHIN EXISTING/PROPOSED R/W OR EASEMENT.

ENVIRONMENTALLY SENSITIVE AREA
SEE PROJECT SPECIAL PROVISIONS

ICA Engineering
5121 Kingdom Way,
Suite 100
Raleigh, NC 27607
NC License No: F-0258

8/1/2014
K:\Transportation\Roadways\Erosion Control\cadd\BMU-0000082_erosion_c&g.dgn
ICA & Associates, P.A.

GRAPHIC SCALE
50 0 50 100

PROJECT REFERENCE NO.	SHEET NO.
17BP.7.R.71	EC-5/CONST.4
R/W SHEET NO.	___
ROADSIDE ENVIRONMENTAL PROJECT ENGINEER	

LEVEL III CERTIFIED BY:
ALEXANDER SNIDER, P.E.
CERTIFICATION NUMBER: 3064
ISSUED: AUGUST 1, 2014

FINAL EROSION CONTROL FOR CONSTRUCTION SHEET 4

N
NC GRID
NAD 83 NA 2011

DRAINAGE NOTES:
MINIMUM SLOPE ON ALL PIPES IS 0.5%
DO NOT USE CONCRETE ON 15" DRAINAGE PIPE (401 TO 402)

DETAIL C
BANK STABILIZATION
(Not to Scale)

Type of Liner= CLASS II RIP RAP
-L- STA. 15+30
-L- STA. 15+70

DETAIL A
TOE PROTECTION
(Not to Scale)

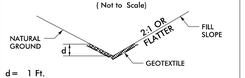

d= 1 Ft.
Type of Liner= CLASS B Rip-Rap
-L- STA. 13+40 TO 14+30 LT
-L- STA. 16+50 TO 18+00 LT

DETAIL B
TOE PROTECTION
(Not to Scale)

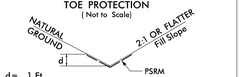

d= 1 Ft.
Type of Liner= PSRM
-L- STA. 17+40 TO 17+70 RT

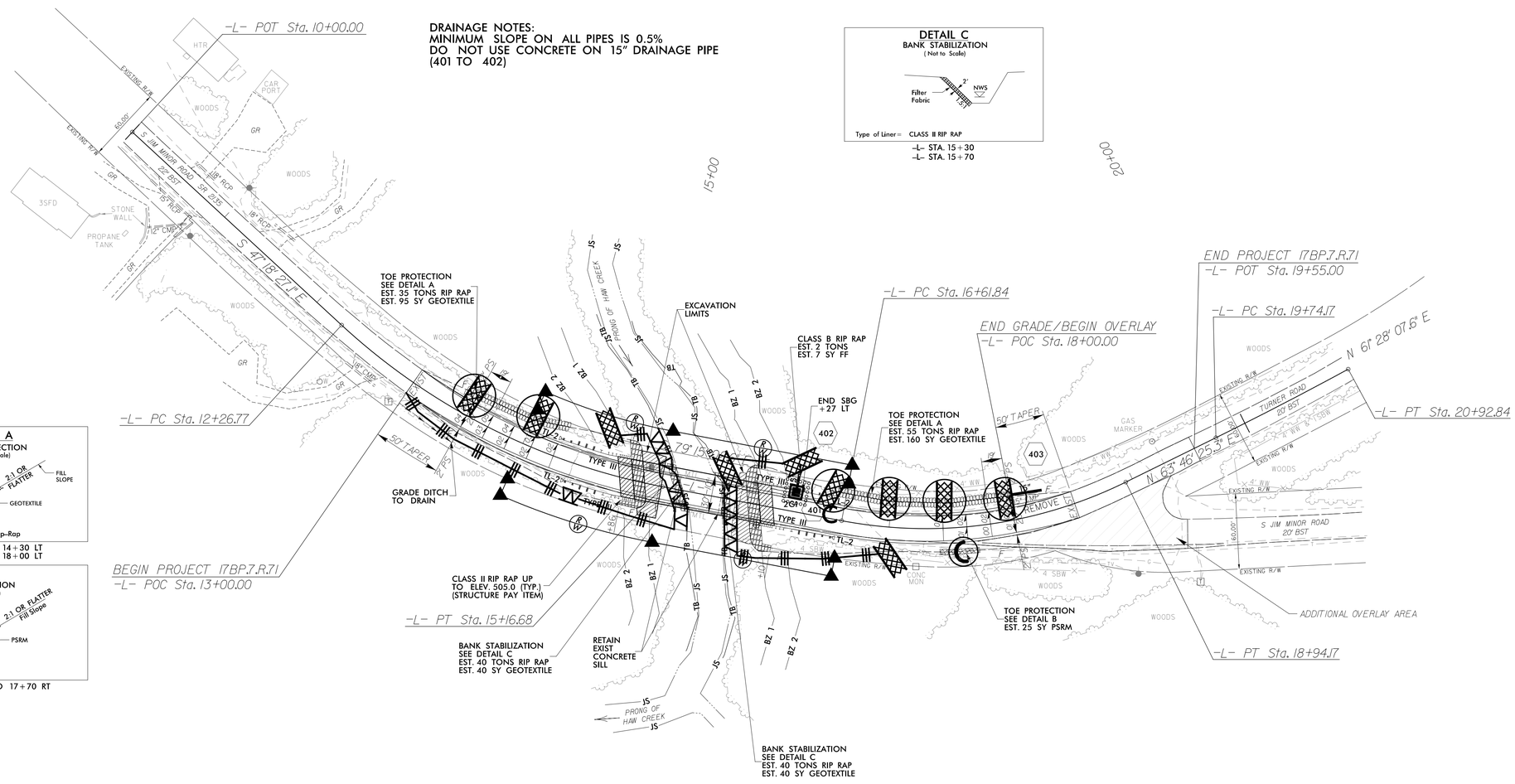

NOTE:
ALL EROSION CONTROL DEVICES SHOWN ARE LOCATED WITHIN EXISTING/PROPOSED R/W OR EASEMENT.

ICA Engineering
5121 Kingdom Way, Suite 100
Raleigh, NC 27607
NC License No: F-0258

8/1/2014
R:\Hydraulics\Erosion Control\cadd\BMU-000082_hyd_erosion_final.dgn
Kimley-Horn and Associates, P.C.

STATE	STATE PROJECT REFERENCE NO.	SHEET NO.	TOTAL SHEETS
N.C.	17BP.7.R.71	RF-1	
STATE PROJ. NO.	F. A. PROJ. NO.	DESCRIPTION	

PLANTING DETAILS

SEEDLING / LINER BAREROOT PLANTING DETAIL

HEALING IN

1. Locate a healing-in site in a shady, well protected area.
2. Excavate a flat bottom trench 12 inches deep and provide drainage.

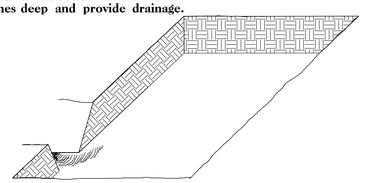

3. Backfill the trench with 2 inches well rotted sawdust. Place a 2 inch layer of well rotted sawdust at a sloping angle at one end of the trench.

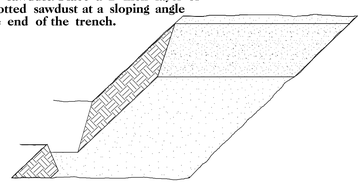

4. Place a single layer of plants against the sloping end so that the root collar is at ground level.

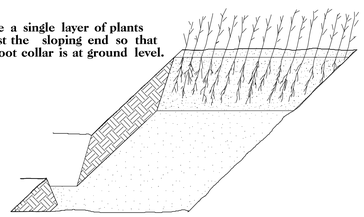

5. Place a 2 inch layer of well rotted sawdust over the roots maintaining a sloping angle.

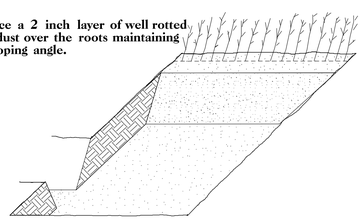

6. Repeat layers of plants and sawdust as necessary and water thoroughly.

DIBBLE PLANTING METHOD
USING THE KBC PLANTING BAR

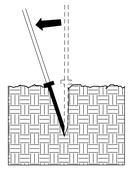

1. Insert planting bar as shown and pull handle toward planter.

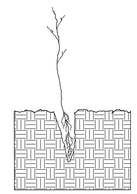

2. Remove planting bar and place seedling at correct depth.

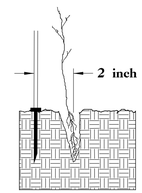

3. Insert planting bar 2 inches toward planter from seedling.

4. Pull handle of bar toward planter, firming soil at bottom.

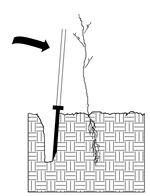

5. Push handle forward firming soil at top.

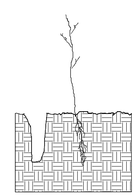

6. Leave compaction hole open. Water thoroughly.

PLANTING NOTES:

PLANTING BAG
During planting, seedlings shall be kept in a moist canvas bag or similar container to prevent the root systems from drying.

KBC PLANTING BAR
Planting bar shall have a blade with a triangular cross section, and shall be 12 inches long, 4 inches wide and 1 inch thick at center.

ROOT PRUNING
All seedlings shall be root pruned, if necessary, so that no roots extend more than 10 inches below the root collar.

REFORESTATION

☐ TREE REFORESTATION SHALL BE PLANTED 6 FT. TO 10 FT. ON CENTER, RANDOM SPACING, AVERAGING 8 FT. ON CENTER, APPROXIMATELY 680 PLANTS PER ACRE.

REFORESTATION

MIXTURE, TYPE, SIZE, AND FURNISH SHALL CONFORM TO THE FOLLOWING:

25%	LIRIODENDRON TULIPIFERA	TULIP POPLAR	12 in – 18 in BR
25%	PLATANUS OCCIDENTALIS	SYCAMORE	12 in – 18 in BR
25%	FRAXINUS PENNSYLVANICA	GREEN ASH	12 in – 18 in BR
25%	BETULA NIGRA	RIVER BIRCH	12 in – 18 in BR

REFORESTATION DETAIL SHEET

N.C.D.O.T. - ROADSIDE ENVIRONMENTAL UNIT

PROJECT REFERENCE	SHEET NO.
17BP.7.R.71 – ALAMANCE #82	UO-01

Prepared in the Office of:

THE WOOTEN COMPANY
LICENSE NO. F-0115

THE WOOTEN COMPANY
ENGINEERING | PLANNING | ARCHITECTURE
120 North Boylan Avenue Raleigh NC 27603-1423
919.828.0531 fax 919.834.3589

GRAPHIC SCALE
25' 0 25' 50'

UTILITIES BY OTHERS

NOTE:
ALL PROPOSED UTILITY WORK SHOWN ON THIS SHEET WILL BE DONE BY OTHERS

DRAINAGE NOTES:
MINIMUM SLOPE ON ALL PIPES IS 0.5%
DO NOT USE CONCRETE ON 15" DRAINAGE PIPE (401 TO 402)

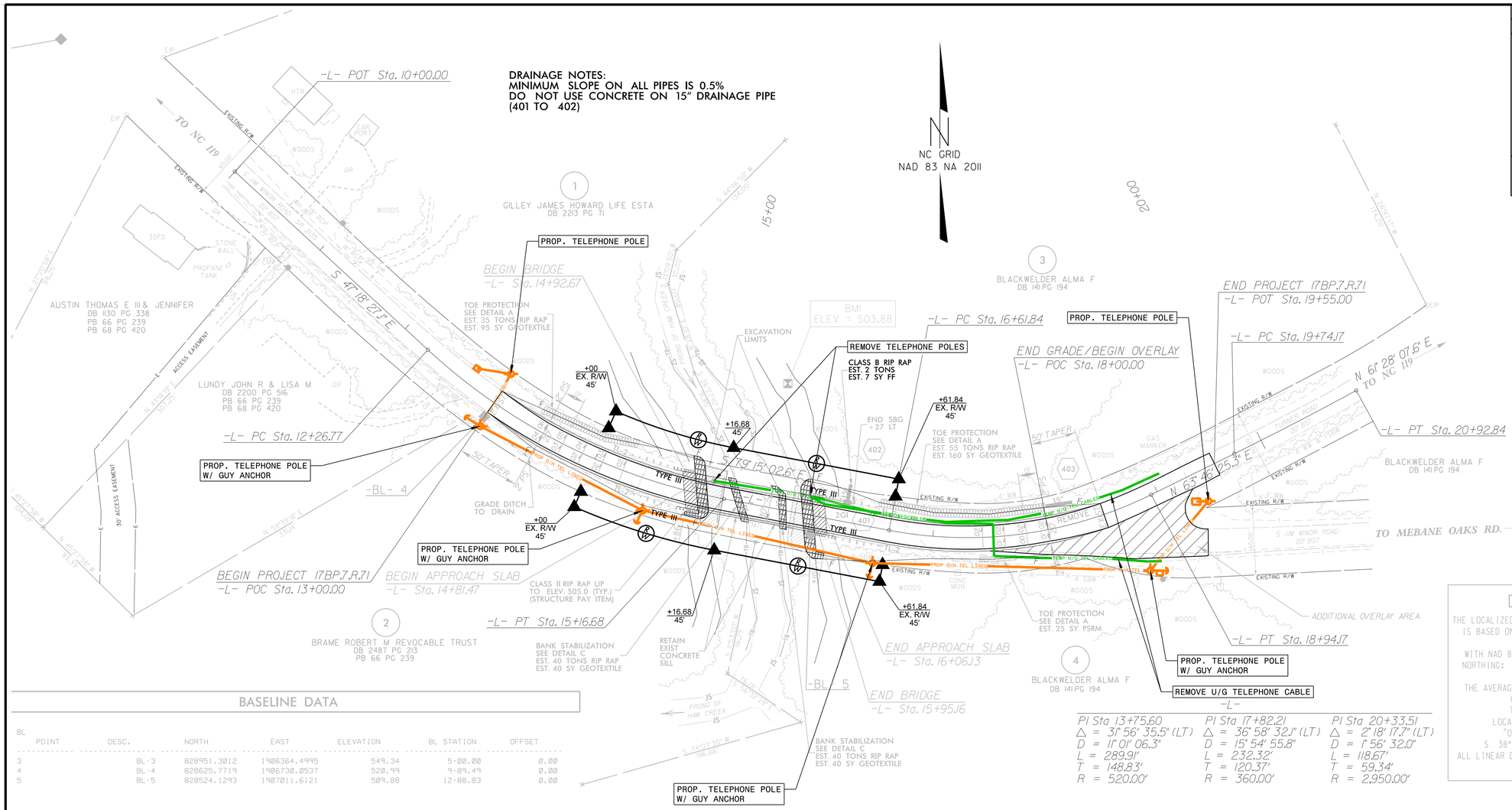

BENCHMARK DATA

BM1 ELEVATION = 503.88
N 828654 E 1906992
BL STATION 12+26.00 116 LEFT
R/R SPIKE IN 24" SYCAMORE

BASELINE DATA

BL POINT	DESC.	NORTH	EAST	ELEVATION	BL STATION	OFFSET
3	BL-3	828951.3012	1906364.4995	549.34	5+00.00	0.00
4	BL-4	828625.7719	1906730.0537	520.99	9+89.49	0.00
5	BL-5	828524.1293	1907011.6121	509.88	12+88.83	0.00

PI Sta 13+75.60	PI Sta 17+82.21	PI Sta 20+33.51
△ = 31° 56' 35.5" (LT)	△ = 36° 58' 32.1" (LT)	△ = 2° 18' 17.7" (LT)
D = 11° 01' 06.3"	D = 15° 54' 55.8"	D = 1° 56' 32.0"
L = 289.91'	L = 232.32'	L = 118.67'
T = 148.83'	T = 120.37'	T = 59.34'
R = 520.00'	R = 360.00'	R = 2,950.00'

DATUM DESCRIPTION

THE LOCALIZED COORDINATE SYSTEM DEVELOPED FOR THIS PROJECT IS BASED ON THE STATE PLANE COORDINATES ESTABLISHED BY NCDOT FOR MONUMENT "00-0082-2"
WITH NAD 83/NSRS 2011 STATE PLANE GRID COORDINATES OF NORTHING: 829352.5800(ft) EASTING: 1906100.4740(ft)
ELEVATION: 553.52(ft)
THE AVERAGE COMBINED GRID FACTOR USED ON THIS PROJECT (GROUND TO GRID) IS: 0.9999426425
THE N.C. LAMBERT GRID BEARING AND LOCALIZED HORIZONTAL GROUND DISTANCE FROM "00-0082-2" TO -L- STATION 10+00 IS
S 38° 46' 59.28" E DISTANCE: 661.249 (ft.)
ALL LINEAR DIMENSIONS ARE LOCALIZED HORIZONTAL DISTANCES
VERTICAL DATUM USED IS NAVD 88

10/5/2014
4:08:44 PM
T:\Projects\Hatch_Mott_MacDonald-3160\B\Alamance#82\CADD\000082_ut_rdy_U01.psh.dgn
jhorris

PROJ. REFERENCE NO.	SHEET NO.
17BP.7.R.71	X-1
ALAMANCE #82	

0 5 10

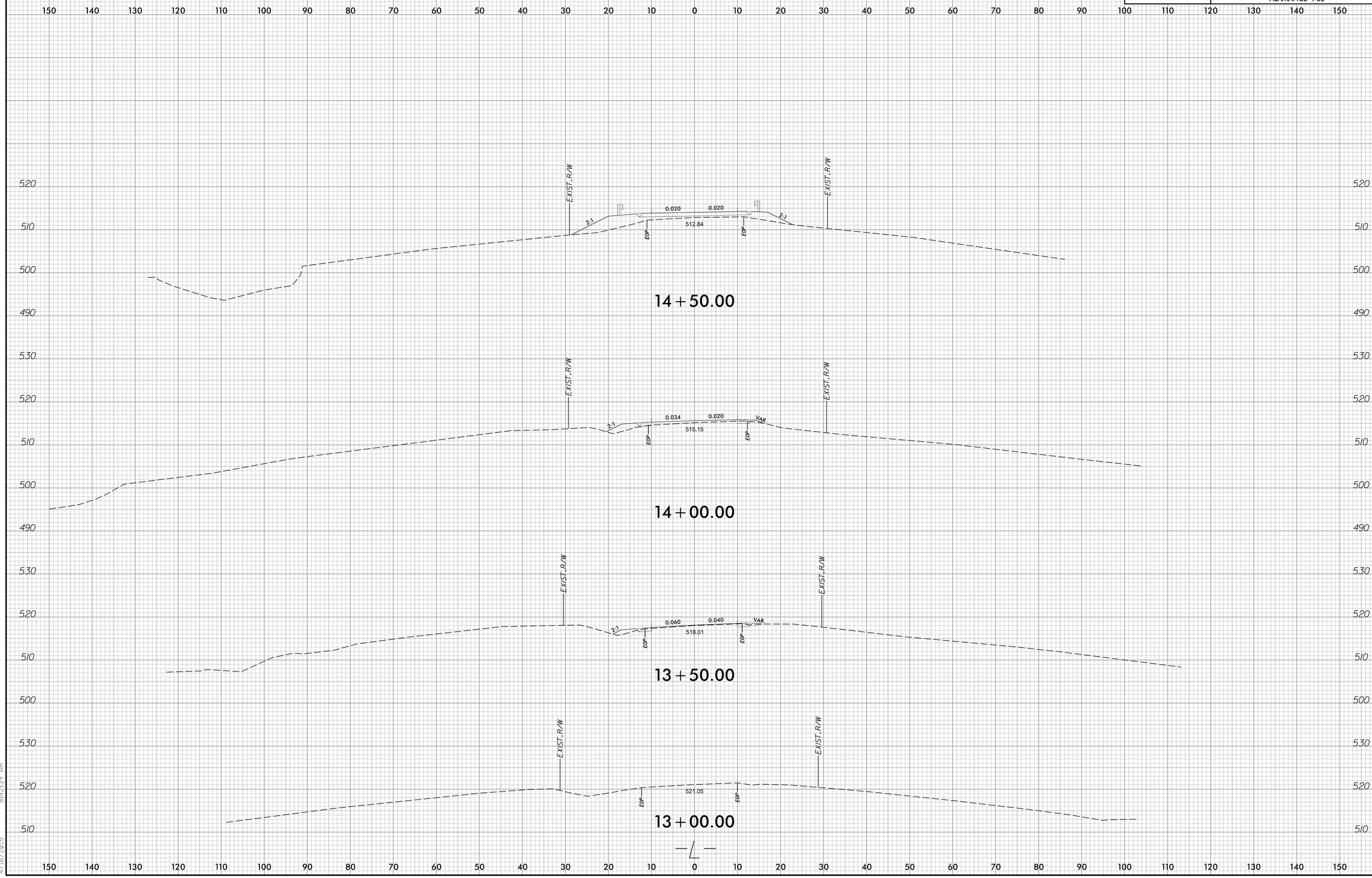

jo-66165
R:\Roadway\Xsc\Xpl\000082_rdy_xpl.dgn
4/16/2015 8:42:39 AM

PROJ. REFERENCE NO.	SHEET NO.
17BP.7.R.71	X-2
ALAMANCE #82	

0 5 10

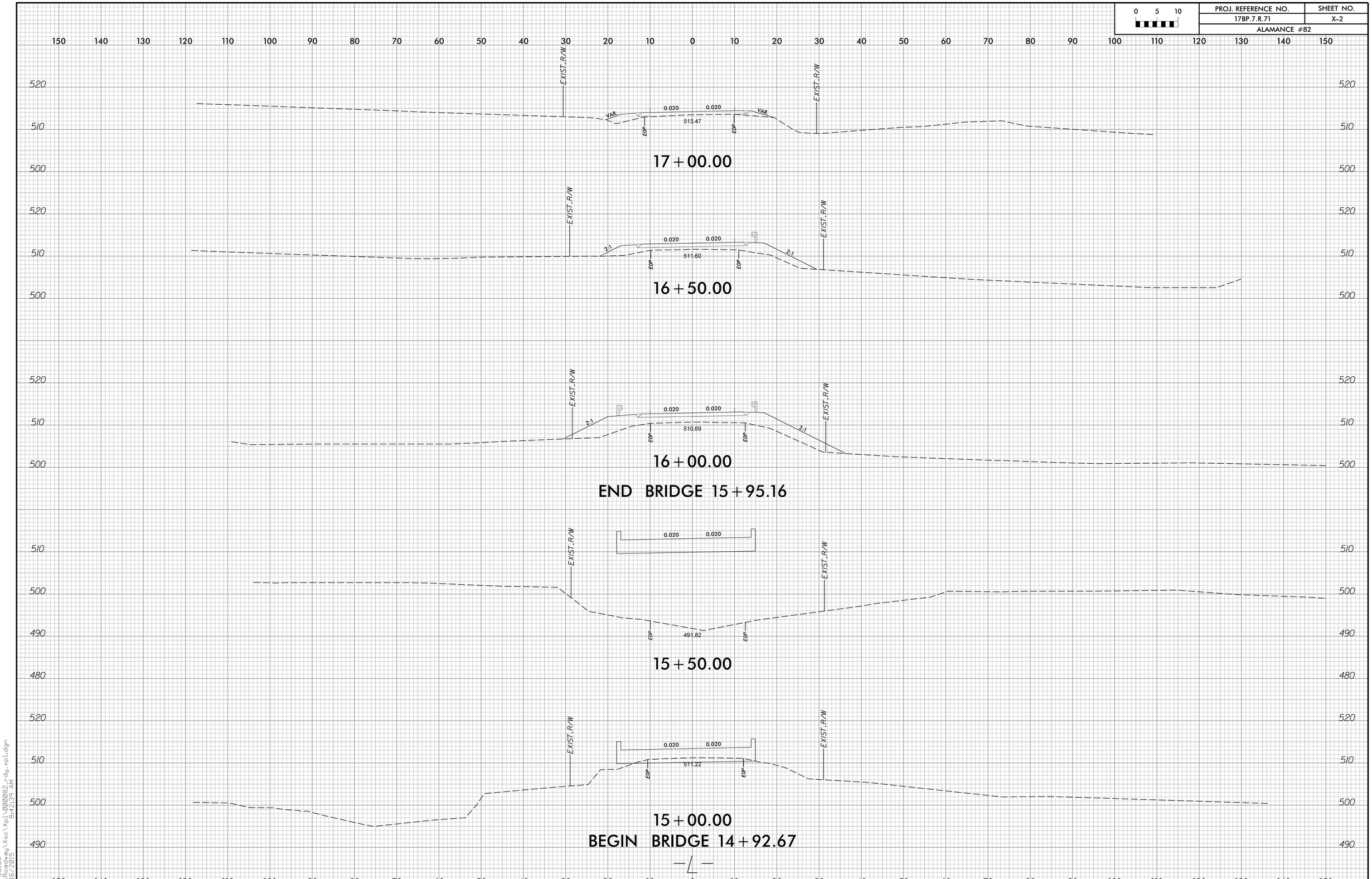

jor66165
R:\Roadway\Xsc\Xpl\000082_rdy_xpl.dgn
4/16/2015
8:42:39 AM

PROJ. REFERENCE NO.	SHEET NO.
17BP.7.R.71	X-3
ALAMANCE #82	

0 5 10

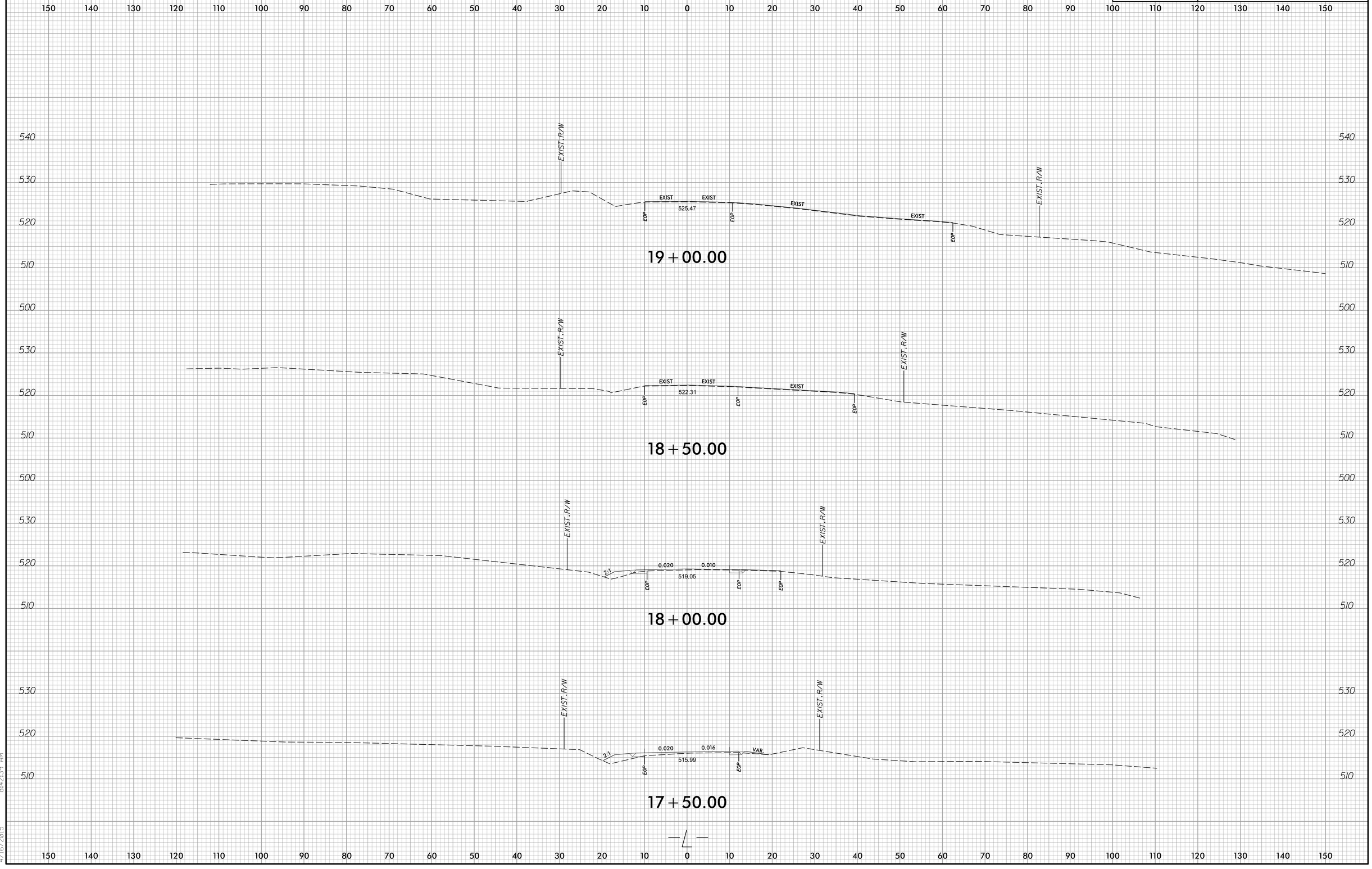

jor66165
R:\Roadway\Xsc\Xpl\0000082_rdy_xpl.dgn
4/16/2015 8:42:39 AM

PROJ. REFERENCE NO.	SHEET NO.
17BP.7.R.71	X-4
ALAMANCE #82	

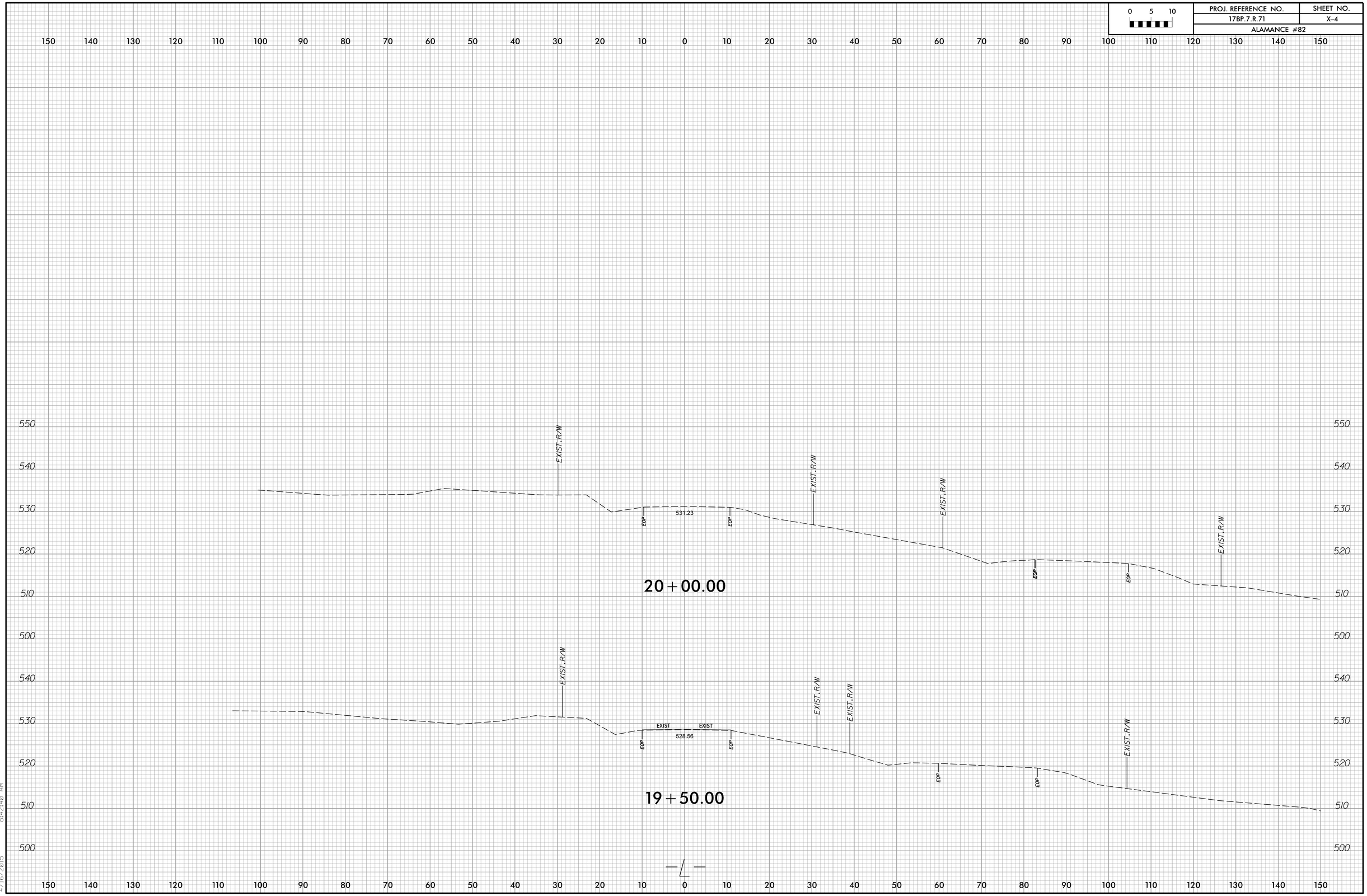

jar66165
R:\Roadway\Xsc\Xpl\0000082_rdy_xpl.dgn
4/16/2015 8:42:40 AM

DocuSign Envelope ID: 408D23F3-A1EB-4E6C-845D-3132E13014F1

BM #1 RAILROAD SPIKE IN 24" SYCAMORE, STA. 15+52.34 -L-, 108.12' LT., EL. 503.88

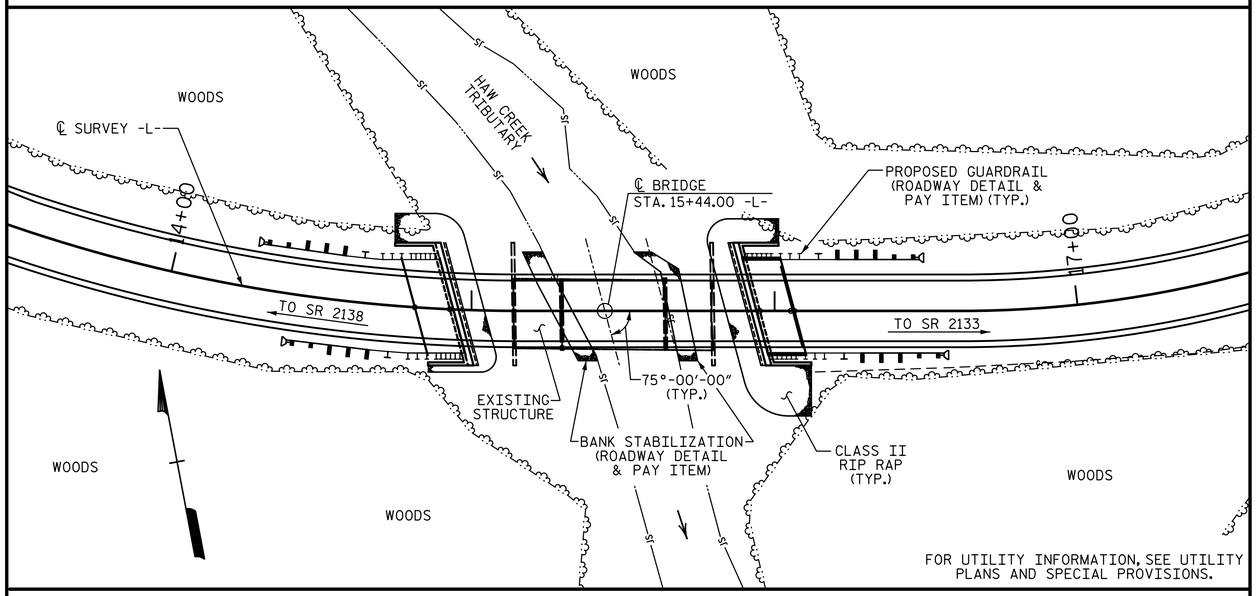

LOCATION SKETCH

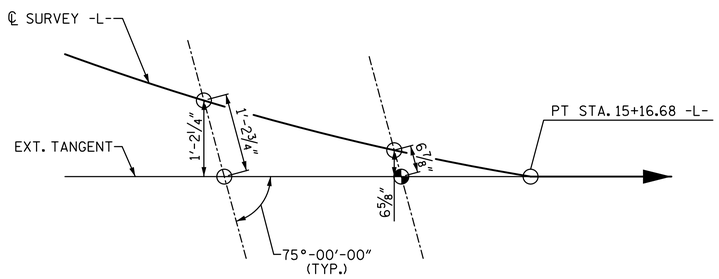

EXTENDED TANGENT LAYOUT

NOTE: THE EFFECTS OF THE HORIZONTAL CURVE SHALL BE NEGLECTED IN THE CONSTRUCTION OF THIS BRIDGE. THIS BRIDGE IS TO BE BUILT ALONG THE EXTENDED TANGENT AND -L- BETWEEN THE WORK POINTS AT THE FILL FACES. THE APPROACH SLAB AT END BENT 1 IS TO BE CONSTRUCTED ALONG THE EXTENDED TANGENT.

NOTES:

ASSUMED LIVE LOAD = HL-93 OR ALTERNATE LOADING.

THIS BRIDGE HAS BEEN DESIGNED IN ACCORDANCE WITH THE AASHTO LRFD BRIDGE DESIGN SPECIFICATIONS.

THIS BRIDGE IS LOCATED IN SEISMIC ZONE 1.

FOR OTHER DESIGN DATA AND GENERAL NOTES, SEE SHEET SN.

FOR EROSION CONTROL MEASURES, SEE EROSION CONTROL PLANS.

REMOVAL OF THE EXISTING BRIDGE SHALL BE PERFORMED SO AS NOT TO ALLOW DEBRIS TO FALL INTO THE WATER. THE CONTRACTOR SHALL REMOVE THE BRIDGE AND SUBMIT PLANS FOR DEMOLITION IN ACCORDANCE WITH ARTICLE 402-2 OF THE STANDARD SPECIFICATIONS.

THE MATERIAL SHOWN IN THE CROSS-HATCHED AREA SHALL BE EXCAVATED FOR A DISTANCE OF 30 FT. LT. AND RT. OF CENTERLINE ROADWAY AS DIRECTED BY THE ENGINEER. THIS WORK WILL BE PAID FOR AT THE CONTRACT LUMP SUM PRICE FOR UNCLASSIFIED STRUCTURE EXCAVATION. SEE SECTION 412 OF THE STANDARD SPECIFICATIONS.

THE EXISTING STRUCTURE CONSISTS OF 1 SPAN @ 16'-3½", 1 SPAN @ 34'-3" AND 1 SPAN @ 16'-2". THE SUPERSTRUCTURE HAS A CLEAR ROADWAY WIDTH OF 23'-7" AND HAS A STEEL PLANK DECK ON STEEL I BEAMS. THE END BENTS CONSIST OF TIMBER CAPS AND TIMBER PILES. THE BENTS CONSIST OF TIMBER CAPS AND TIMBER PILES WITH TIMBER AND CONCRETE SILLS. THE EXISTING STRUCTURE, WHICH IS LOCATED AT THE SITE OF THE PROPOSED STRUCTURE, SHALL BE REMOVED EXCEPT AS NOTED. THE EXISTING BRIDGE IS PRESENTLY POSTED FOR LOAD LIMIT. SHOULD THE STRUCTURAL INTEGRITY OF THE BRIDGE DETERIORATE DURING CONSTRUCTION OF THE PROPOSED BRIDGE, THE LOAD LIMIT MAY BE REDUCED AS NECESSARY DURING THE LIFE OF THE PROJECT.

THE SUBSTRUCTURE OF THE EXISTING BRIDGE INDICATED ON THE PLANS IS FROM THE BEST INFORMATION AVAILABLE. SINCE THIS INFORMATION IS SHOWN FOR THE CONVENIENCE OF THE CONTRACTOR. THE CONTRACTOR SHALL HAVE NO CLAIM WHATSOEVER AGAINST THE DEPARTMENT OF TRANSPORTATION FOR ANY DELAYS OR ADDITIONAL COST INCURRED BASED ON DIFFERENCES BETWEEN THE EXISTING BRIDGE SUBSTRUCTURE SHOWN ON THE PLANS AND THE ACTUAL CONDITIONS AT THE PROJECT SITE.

THIS STRUCTURE HAS BEEN DESIGNED IN ACCORDANCE WITH "HEC 18-EVALUATING SCOUR AT BRIDGES."

FOR SUBMITTAL OF WORKING DRAWINGS, SEE SPECIAL PROVISIONS.

FOR FALSEWORK AND FORMWORK, SEE SPECIAL PROVISIONS.

FOR CRANE SAFETY, SEE SPECIAL PROVISIONS.

FOR GROUT FOR STRUCTURES, SEE SPECIAL PROVISIONS.

ASPHALT WEARING SURFACE IS INCLUDED IN ROADWAY QUANTITY ON ROADWAY PLANS.

INASMUCH AS THE PAINT SYSTEM ON THE EXISTING STRUCTURAL STEEL CONTAINS LEAD, THE CONTRACTOR'S ATTENTION IS DIRECTED TO ARTICLE 107-1 OF THE STANDARD SPECIFICATIONS. ANY COSTS RESULTING FROM COMPLIANCE WITH APPLICABLE STATE OR FEDERAL REGULATIONS PERTAINING TO HANDLING OF MATERIALS CONTAINING LEAD BASED PAINT SHALL BE INCLUDED IN THE BID PRICE FOR "REMOVAL OF EXISTING STRUCTURE AT STATION 15+44.00 -L-."

FOUNDATION NOTES:

FOR PILES, SEE SECTION 450 OF THE STANDARD SPECIFICATIONS.

PILES AT END BENT 1 AND END BENT 2 ARE DESIGNED FOR A FACTORED RESISTANCE OF 115 TONS PER PILE.

DRIVE PILES AT END BENT 1 AND END BENT 2 TO A REQUIRED DRIVING RESISTANCE OF 195 TONS PER PILE.

STEEL H-PILE POINTS ARE REQUIRED FOR STEEL H-PILES AT END BENT 1 AND END BENT 2. FOR STEEL PILE POINTS, SEE SECTION 450 OF THE STANDARD SPECIFICATIONS.

TOTAL BILL OF MATERIAL

	REMOVAL OF EXISTING STRUCTURE	UNCLASSIFIED STRUCTURE EXCAVATION	CLASS A CONCRETE	BRIDGE APPROACH SLABS	REINFORCING STEEL	HP 12 X 53 STEEL PILES		STEEL PILE POINTS	VERTICAL CONCRETE BARRIER RAIL	RIP RAP CLASS II (2'-0" THICK)	GEOTEXTILE FOR DRAINAGE	ELASOMERIC BEARINGS	3'-0" X 3'-3" PRESTRESSED CONCRETE BOX BEAMS	
	LS	LS	CY	LS	LB	NO.	LF	EA	LF	TON	SY	LS	NO.	LF
SUPERSTRUCTURE				LS					200.0			LS	11	1100.00
END BENT 1		LS	29.8		4703	7	140	7		85	95			
END BENT 2		LS	29.8		4703	7	105	7		85	95			
TOTAL	LS	LS	59.6	LS	9406	14	245	14	200.0	170	190	LS	11	1100.00

PROJECT NO. 17BP.7.R.71
ALAMANCE COUNTY
STATION: 15+44.00 -L-

SHEET 2 OF 2

STATE OF NORTH CAROLINA
DEPARTMENT OF TRANSPORTATION
RALEIGH

GENERAL DRAWING

FOR BRIDGE ON SR 2135 (JIM MINOR RD.) OVER HAW CREEK TRIBUTARY I BETWEEN SR 2138 AND SR 2133
30'-10" CLEAR ROADWAY-75° SKEW

GENERAL DRAWING PREPARED BY:
SIMPSON ENGINEERS & ASSOCIATES
5640 Dillard Drive
Suite 200
Cary, NC 27518
(919) 852-0468
(919) 852-0598 (Fax)
www.simpsonengr.com
LICENSURE NO. C-2521

NORTH CAROLINA PROFESSIONAL SEAL 21268 ENGINEER BETSY S. COX
11/12/2014

REVISIONS						SHEET NO.
NO.	BY:	DATE:	NO.	BY:	DATE:	S-2
1			3			TOTAL SHEETS
2			4			15

DRAWN BY: S.D.COOPER DATE: 8-14
CHECKED BY: B.S.COX DATE: 8-14
DESIGN ENGINEER OF RECORD: D.R.CALHOUN DATE: 8-14

11/12/2014 9:11:01 AM G:\Projects\2014\17BP7R71 (Alamance 82)\Structures\Drawings\Final\Alamance 82_sd_gd.dgn

DocuSign Envelope ID: 408D23F3-A1EB-4E6C-845D-3132E13014F1

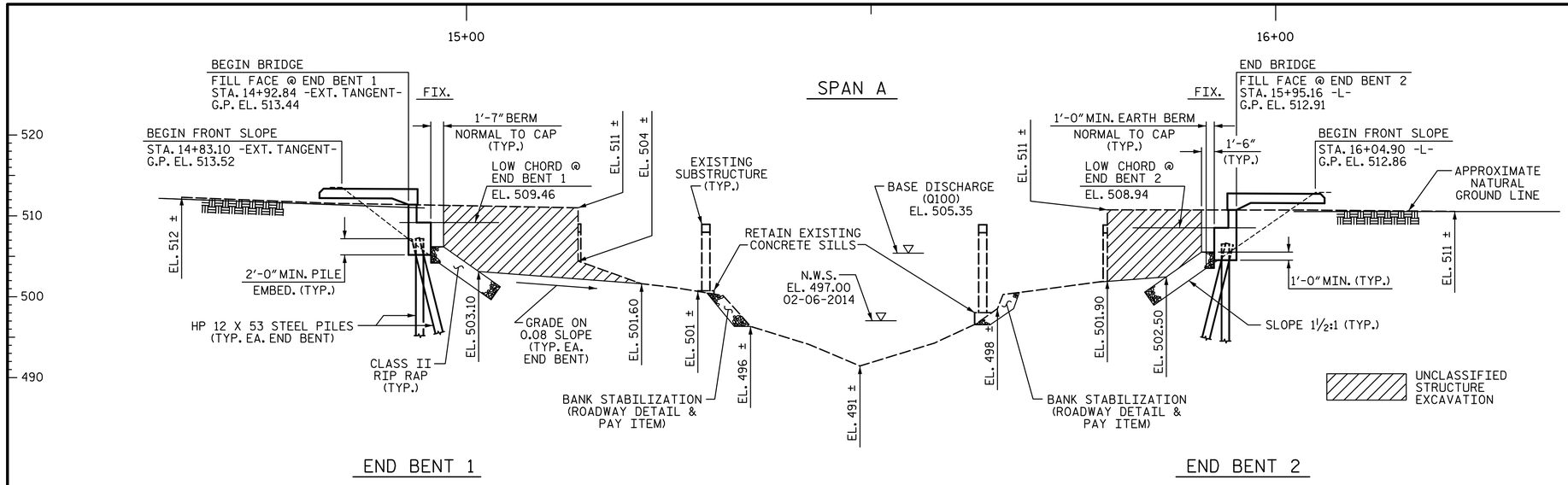

SECTION ALONG ℄ SURVEY -L-

(SECTIONS @ END BENTS ARE @ RIGHT ANGLES)

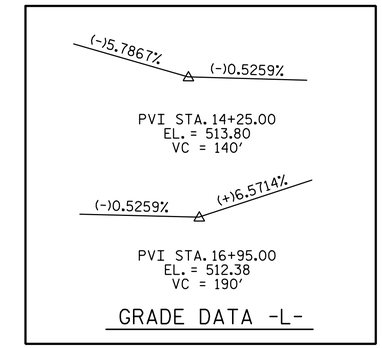

GRADE DATA -L-

HYDRAULIC DATA:

DESIGN DISCHARGE	= 1400 CFS
FREQUENCY OF DESIGN FLOOD	= 25 YEAR
DESIGN HIGH WATER ELEVATION	= 503.2
DRAINAGE AREA	= 4.7 SQ. MI.
BASE DISCHARGE (Q 100)	= 2240 CFS
BASE HIGH WATER ELEVATION	= 505.35

OVERTOPPING FLOOD DATA:

OVERTOPPING DISCHARGE	= 8600 CFS
FREQUENCY OF OVERTOPPING FLOOD	= 500+ YEAR
OVERTOPPING FLOOD ELEVATION	= 513.10 ✱✱

✱✱ OVERTOPPING OCCURS AT ROADWAY SAG STA. 16+14 -L- ON ROADWAY HIGH (RIGHT) SIDE

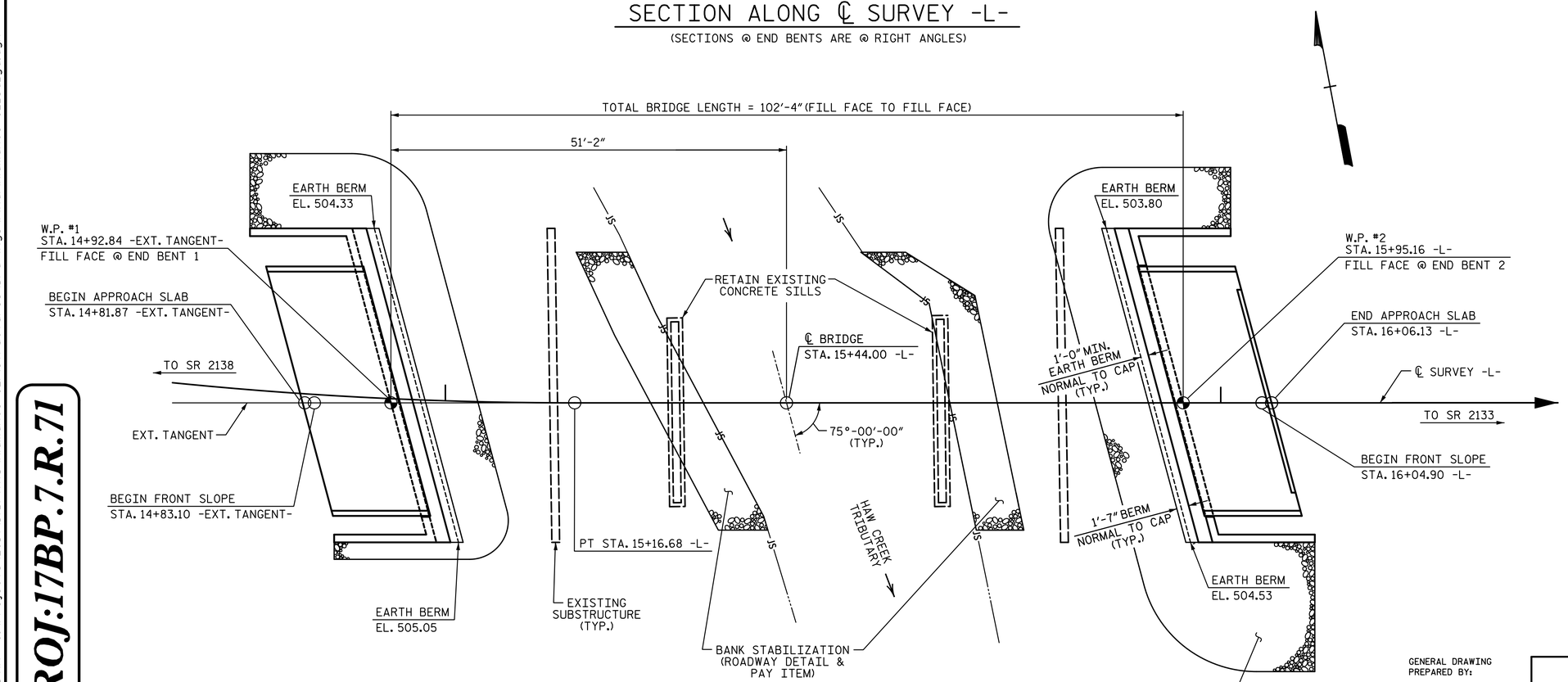

PLAN

(PILES NOT SHOWN IN PLAN VIEW)

I HEREBY CERTIFY THESE PLANS ARE THE AS-BUILT PLANS

PROJECT NO. 17BP.7.R.71

ALAMANCE COUNTY

STATION: 15+44.00 -L-

SHEET 1 OF 2 REPLACES BRIDGE #82

STATE OF NORTH CAROLINA
DEPARTMENT OF TRANSPORTATION
RALEIGH

GENERAL DRAWING

FOR BRIDGE ON SR 2135
(JIM MINOR RD.) OVER HAW CREEK
TRIBUTARY I
BETWEEN SR 2138 AND SR 2133
30'-10" CLEAR ROADWAY - 75° SKEW

GENERAL DRAWING PREPARED BY:

SIMPSON ENGINEERS & ASSOCIATES
5640 Dillard Drive
Suite 200
Cary, NC 27518
(919) 852-0468
(919) 852-0598 (Fax)
www.simpsonengr.com
LICENSURE NO. C-2521

NORTH CAROLINA PROFESSIONAL SEAL ENGINEER BETSY S. COX 11/12/2014

REVISIONS							
NO.	BY:	DATE:	NO.	BY:	DATE:		
1			3				
2			4				

SHEET NO. S-1
TOTAL SHEETS 15

DRAWN BY: S.D.COOPER DATE: 8-14
CHECKED BY: B.S.COX DATE: 8-14
DESIGN ENGINEER OF RECORD: D.R.CALHOUN DATE: 8-14

PROJ.17BP.7.R.71

11/12/2014 9:11:01 AM G:\Projects\2014\17BP7R71 (Alamance 82)\Structures\Drawings\Final\Alamance 82_sd_gd.dgn

LOAD AND RESISTANCE FACTOR RATING (LRFD) SUMMARY FOR PRESTRESSED CONCRETE GIRDERS

LEVEL		VEHICLE	WEIGHT (W) (TONS)	CONTROLLING LOAD RATING	MINIMUM RATING FACTORS (RF)	TONS = W X RF	STRENGTH I LIMIT STATE											SERVICE III LIMIT STATE						COMMENT NUMBER
								MOMENT					SHEAR						MOMENT					
							LIVELOAD FACTORS	DISTRIBUTION FACTORS (DF)	RATING FACTOR	SPAN	GIRDER LOCATION	DISTANCE FROM LEFT END OF SPAN (ft)	DISTRIBUTION FACTORS (DF)	RATING FACTOR	SPAN	GIRDER LOCATION	DISTANCE FROM LEFT END OF SPAN (ft)	LIVELOAD FACTORS	DISTRIBUTION FACTORS (DF)	RATING FACTOR	SPAN	GIRDER LOCATION	DISTANCE FROM LEFT END OF SPAN (ft)	
DESIGN LOAD RATING		HL-93(Inv)	N/A	1	1.058	--	1.75	0.267	1.29	A	EL	49.224	0.574	1.25	A	EL	9.845	0.80	0.267	**1.06**	A	EL	**49.224**	
		HL-93(Opr)	N/A	--	1.621	--	1.35	0.267	1.67	A	EL	49.224	0.574	1.62	A	EL	9.845	N/A	--	--	--	--	--	
		HS-20(Inv)	36.000	2	1.472	52.983	1.75	0.267	1.79	A	EL	49.224	0.574	1.67	A	EL	9.845	0.80	0.267	**1.47**	A	EL	**49.224**	
		HS-20(Opr)	36.000	--	2.168	78.052	1.35	0.267	2.32	A	EL	49.224	0.574	2.17	A	EL	9.845	N/A	--	--	--	--	--	
LEGAL LOAD RATING	SV	SNSH	13.500	--	3.488	47.092	1.4	0.267	5.3	A	EL	49.224	0.574	5.14	A	EL	9.845	0.80	0.267	3.49	A	EL	49.224	
		SNGARBS2	20.000	--	2.527	50.541	1.4	0.267	3.84	A	EL	49.224	0.574	3.6	A	EL	9.845	0.80	0.267	2.53	A	EL	49.224	
		SNAGRIS2	22.000	--	2.364	52.007	1.4	0.267	3.59	A	EL	49.224	0.574	3.32	A	EL	9.845	0.80	0.267	2.36	A	EL	49.224	
		SNCOTTS3	27.250	--	1.734	47.244	1.4	0.267	2.63	A	EL	49.224	0.574	2.56	A	EL	9.845	0.80	0.267	1.73	A	EL	49.224	
		SNAGGRS4	34.925	--	1.421	49.625	1.4	0.267	2.16	A	EL	49.224	0.574	2.09	A	EL	9.845	0.80	0.267	1.42	A	EL	49.224	
		SNS5A	35.550	--	1.391	49.463	1.4	0.267	2.11	A	EL	49.224	0.574	2.1	A	EL	9.845	0.80	0.267	1.39	A	EL	49.224	
		SNS6A	39.950	--	1.265	50.545	1.4	0.267	1.92	A	EL	49.224	0.574	1.9	A	EL	9.845	0.80	0.267	1.27	A	EL	49.224	
		SNS7B	42.000	--	1.204	50.587	1.4	0.267	1.83	A	EL	49.224	0.574	1.85	A	EL	9.845	0.80	0.267	1.20	A	EL	49.224	
	TTST	TNAGRIT3	33.000	--	1.54	50.804	1.4	0.267	2.34	A	EL	49.224	0.574	2.27	A	EL	9.845	0.80	0.267	1.54	A	EL	49.224	
		TNT4A	33.075	--	1.543	51.042	1.4	0.267	2.34	A	EL	49.224	0.574	2.23	A	EL	9.845	0.80	0.267	1.54	A	EL	49.224	
		TNT6A	41.600	--	1.251	52.049	1.4	0.267	1.9	A	EL	49.224	0.574	1.94	A	EL	9.845	0.80	0.267	1.25	A	EL	49.224	
		TNT7A	42.000	--	1.252	52.576	1.4	0.267	1.9	A	EL	49.224	0.574	1.9	A	EL	9.845	0.80	0.267	1.25	A	EL	49.224	
		TNT7B	42.000	--	1.281	53.819	1.4	0.267	1.95	A	EL	49.224	0.574	1.82	A	EL	9.845	0.80	0.267	1.28	A	EL	49.224	
		TNAGRIT4	43.000	--	1.229	52.851	1.4	0.267	1.87	A	EL	49.224	0.574	1.76	A	EL	9.845	0.80	0.267	1.23	A	EL	49.224	
		TNAGT5A	45.000	--	1.164	52.365	1.4	0.267	1.77	A	EL	49.224	0.574	1.73	A	EL	9.845	0.80	0.267	1.16	A	EL	49.224	
		TNAGT5B	45.000	3	1.154	51.925	1.4	0.267	1.75	A	EL	49.224	0.574	1.68	A	EL	9.845	0.80	0.267	**1.15**	A	EL	**49.224**	

LOAD FACTORS:

DESIGN LOAD RATING FACTORS	LIMIT STATE	γ_{DC}	γ_{DW}
	STRENGTH I	1.25	1.50
	SERVICE III	1.00	1.00

NOTES:

MINIMUM RATING FACTORS ARE BASED ON THE STRENGTH I AND SERVICE III LIMIT STATES.

ALLOWABLE STRESSES FOR SERVICE III LIMIT STATE ARE AS REQUIRED FOR DESIGN.

COMMENTS:

1.
2.
3.
4.

(#) CONTROLLING LOAD RATING

(1) DESIGN LOAD RATING (HL-93)

(2) DESIGN LOAD RATING (HS-20)

(3) LEGAL LOAD RATING **

** SEE CHART FOR VEHICLE TYPE

GIRDER LOCATION

I - INTERIOR GIRDER
EL - EXTERIOR LEFT GIRDER
ER - EXTERIOR RIGHT GIRDER

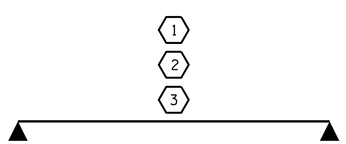

LRFR SUMMARY

PROJECT NO. 17BP.7.R.71
ALAMANCE COUNTY
STATION: 15+44.00 -L-

STATE OF NORTH CAROLINA
DEPARTMENT OF TRANSPORTATION
RALEIGH

STANDARD
LRFR SUMMARY FOR 100' BOX BEAM UNIT 75° SKEW
(NON-INTERSTATE TRAFFIC)

NORTH CAROLINA PROFESSIONAL SEAL 14855 ENGINEER DOUGLAS R. CALHOUN
Douglas R. Calhoun
43019 ENGINEER SEAL
4/23/2015

REVISIONS						SHEET NO.
NO.	BY:	DATE:	NO.	BY:	DATE:	S-3
1			3			TOTAL SHEETS
2			4			15

ASSEMBLED BY : A. SORSENGINH DATE : 5/2014
CHECKED BY : W.F. PARKER DATE : 6/2014
DRAWN BY : TMG 11/11
CHECKED BY : AAC 11/11

18-NOV-2014 12:18
S:\DPG2\Doug\DivisionProjects\17BP\17BP_7_R_71\Plans\Miscellaneous\17BP7R71_SD_LRFR.dgn
taverette

STD. NO. 39LRFR1_75&105S_100L

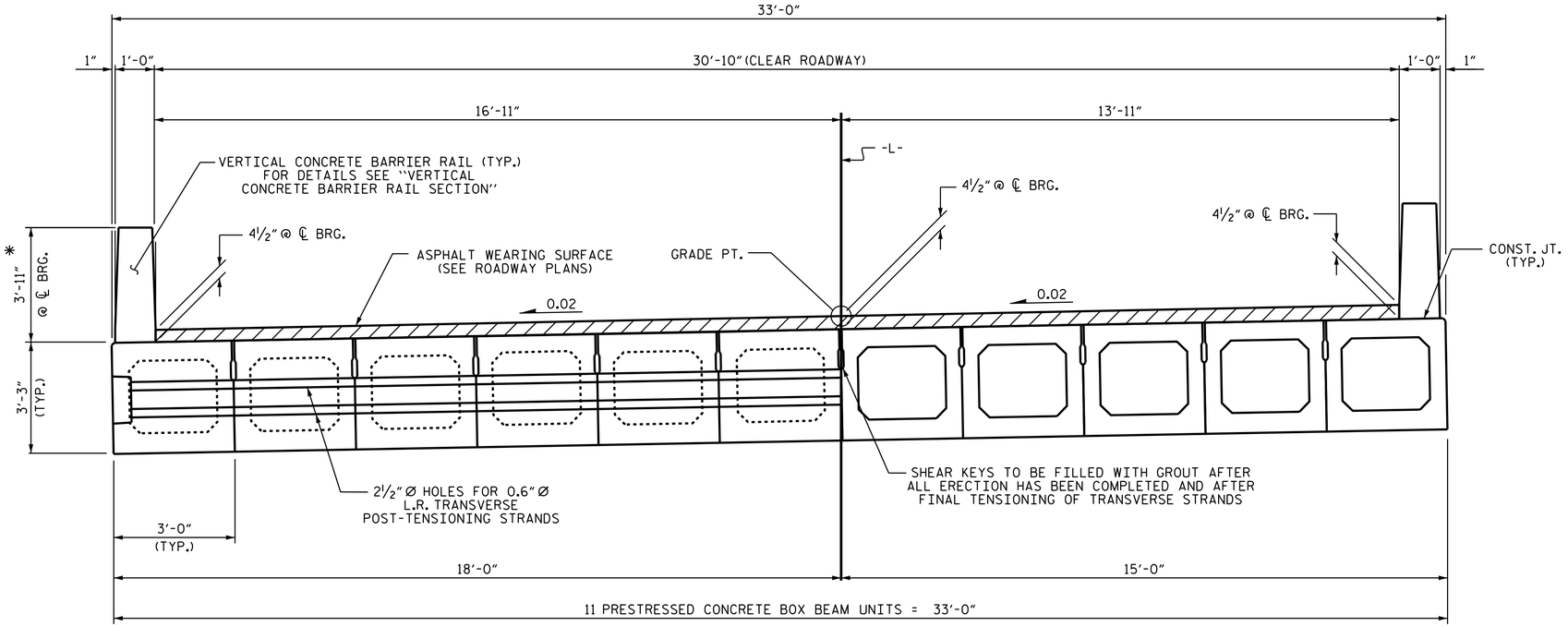

HALF SECTION
AT INTERMEDIATE DIAPHRAGMS

HALF SECTION
THROUGH VOIDS

TYPICAL SECTION

THE MAXIMUM BARRIER RAIL HEIGHT AND ASPHALT THICKNESS IS SHOWN. THE HEIGHT OF THE BARRIER RAIL AND ASPHALT THICKNESS VARIES WHILE THE TOP OF THE BARRIER RAIL FOLLOWS THE PROFILE OF THE GUTTERLINE. FOR RAIL HEIGHT DETAILS AND ASPHALT THICKNESS, SEE THE "VERTICAL CONCRETE BARRIER RAIL SECTION" DETAIL.

FIXED END

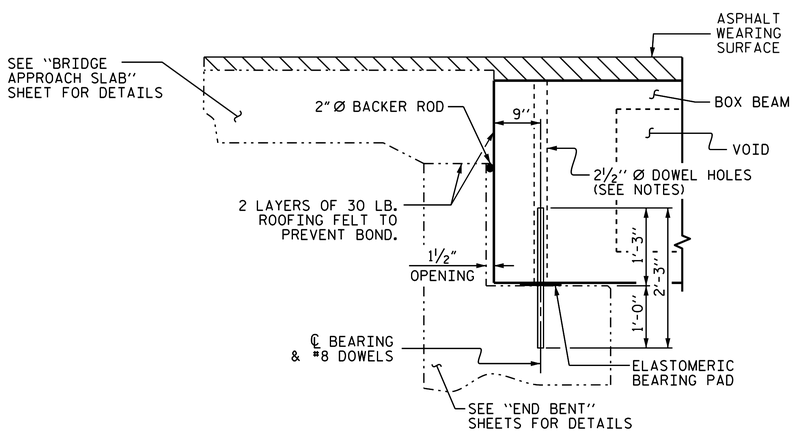

SECTION AT END BENT

NOTES

ALL PRESTRESSING STRANDS SHALL BE 7-WIRE LOW RELAXATION GRADE 270 STRANDS AND SHALL CONFORM TO AASHTO M203 EXCEPT FOR SAMPLING REQUIREMENTS WHICH SHALL BE IN ACCORDANCE WITH THE STANDARD SPECIFICATIONS.

ALL REINFORCING STEEL CAST WITH THE BOX BEAM SECTIONS SHALL BE GRADE 60 AND SHALL BE INCLUDED IN THE UNIT PRICE BID FOR PRESTRESSED CONCRETE BOX BEAMS.

RECESSES FOR TRANSVERSE STRANDS SHALL BE GROUTED AFTER THE TENSIONING OF THE STRANDS.

THE 2½" Ø DOWEL HOLES AT FIXED ENDS OF BOX BEAM SECTIONS SHALL BE FILLED WITH NON-SHRINK GROUT.

THE BACKER RODS SHALL CONFORM TO THE REQUIREMENTS OF TYPE M BOND BREAKER. SEE SECTION 1028 OF THE STANDARD SPECIFICATIONS.

THE TRANSFER OF LOAD FROM THE ANCHORAGES TO THE BOX BEAM UNIT SHALL BE DONE WHEN THE CONCRETE HAS REACHED A COMPRESSIVE STRENGTH OF NOT LESS THAN 5500 PSI.

ALL REINFORCING STEEL IN VERTICAL CONCRETE BARRIER RAILS SHALL BE EPOXY COATED.

PRESTRESSING STRANDS SHALL BE CUT FLUSH WITH THE BOX BEAM UNIT ENDS.

APPLY EPOXY PROTECTIVE COATING TO BOX BEAM UNIT ENDS.

VERTICAL GROOVED CONTRACTION JOINTS, ½" IN DEPTH, SHALL BE TOOLED IN ALL EXPOSED FACES OF THE BARRIER RAIL AND IN ACCORDANCE WITH ARTICLE 825-10(B) OF THE STANDARD SPECIFICATIONS. A VERTICAL CONTRACTION JOINT SHALL BE LOCATED AT EACH THIRD POINT BETWEEN BARRIER RAIL EXPANSION JOINTS. ONLY ONE CONTRACTION JOINT IS REQUIRED AT MIDPOINT OF BARRIER RAIL SEGMENTS LESS THAN 20 FEET IN LENGTH AND NO CONTRACTION JOINTS ARE REQUIRED FOR THOSE SEGMENTS LESS THAN 10 FEET IN LENGTH.

THE LOCATION OF THE VOID DRAINS MAY BE SHIFTED SLIGHTLY WHERE NECESSARY TO CLEAR PRESTRESSING STRANDS OR TRANSVERSE REINFORCING STEEL.

FOR GROUT FOR STRUCTURES, SEE SPECIAL PROVISIONS.

PROJECT NO. 17BP.7.R.71
ALAMANCE COUNTY
STATION: 15+44.00 -L-

SHEET 1 OF 5

STATE OF NORTH CAROLINA
DEPARTMENT OF TRANSPORTATION
RALEIGH

STANDARD

3'-0" X 3'-3"
PRESTRESSED CONCRETE
BOX BEAM UNIT

NORTH CAROLINA PROFESSIONAL SEAL 14855 ENGINEER DOUGLAS R. CALHOUN
Douglas R. Calhoun
43015BF0F0E0F0D...
4/23/2015

REVISIONS						SHEET NO.
NO.	BY:	DATE:	NO.	BY:	DATE:	S-4
1			3			TOTAL SHEETS
2			4			15

ASSEMBLED BY :	A. SORSENGINH	DATE :	5/2014
CHECKED BY :	W. F. PARKER	DATE :	6/2014
DRAWN BY :	DGE 8/11		
CHECKED BY :	TMG 11/11		

18-NOV-2014 12:19
S:\DPG2\Doug\DivisionProjects\17BP\17BP_7_R_71\Plans\Superstructure\17BP7R71_SD_BX.dgn
taverette

STD. NO. 39PCBB1_33

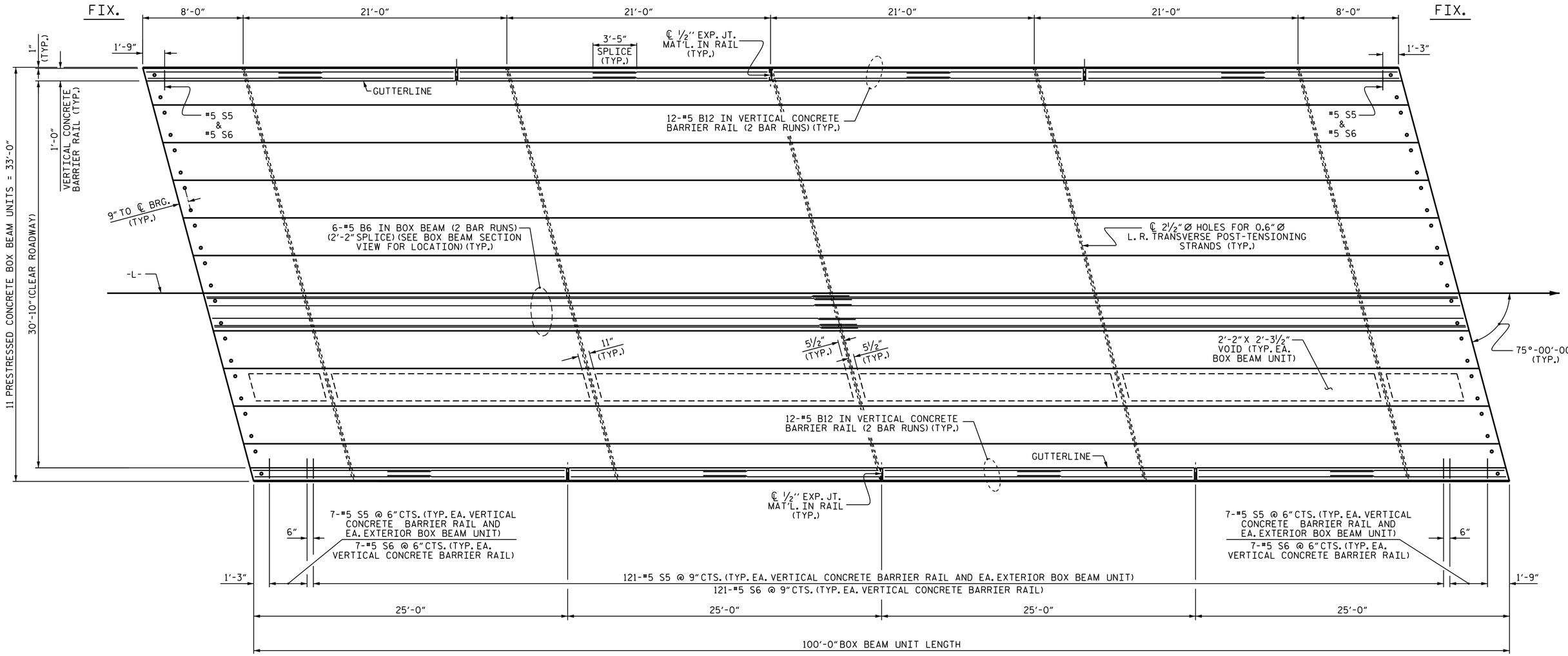

PLAN OF UNIT

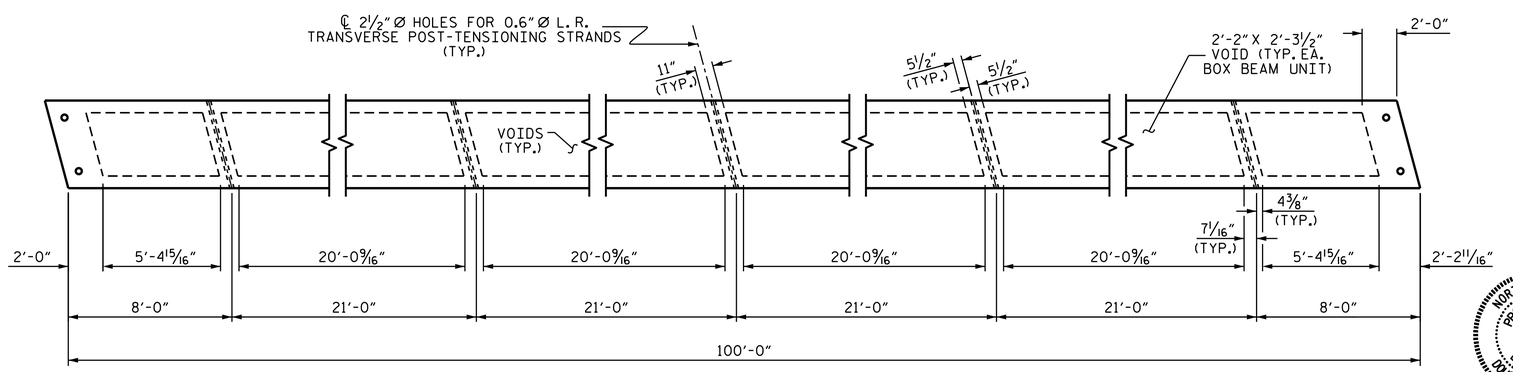

DIAPHRAGM AND VOID LAYOUT

PROJECT NO. 17BP.7.R.71

ALAMANCE COUNTY

STATION: 15+44.00 -L-

SHEET 2 OF 5

STATE OF NORTH CAROLINA
DEPARTMENT OF TRANSPORTATION
RALEIGH

PLAN OF 100' UNIT
30'-10" CLEAR ROADWAY
75° SKEW

NORTH CAROLINA PROFESSIONAL SEAL 14855 ENGINEER DOUGLAS R. CALHOUN

Douglas R. Calhoun
43018 4/23/2015

ASSEMBLED BY :	A. SORSENGINH	DATE :	5/2014
CHECKED BY :	W. F. PARKER	DATE :	6/2014
DRAWN BY : DGE	8/11		
CHECKED BY : TMG	11/11		

REVISIONS						SHEET NO.
NO.	BY:	DATE:	NO.	BY:	DATE:	S-5
1			3			TOTAL SHEETS
2			4			15

18-NOV-2014 12:20
S:\DPG2\Doug\DivisionProjects\17BP\17BP_7_R_71\Plans\Superstructure\17BP7R71_SD_BX.dgn
taverette

STD.NO.39PCBB_33_75S_100L

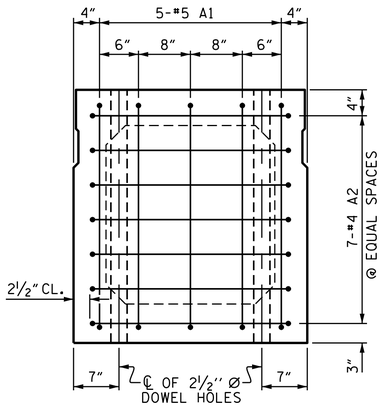

END ELEVATION

SHOWING PLACEMENT OF #5 & #4 "A" BARS AND LOCATION OF DOWEL HOLES.
(INTERIOR BOX BEAM SECTION SHOWN-EXTERIOR SECTION SIMILAR EXCEPT SHEAR KEY LOCATION. STRAND LAYOUT NOT SHOWN.)

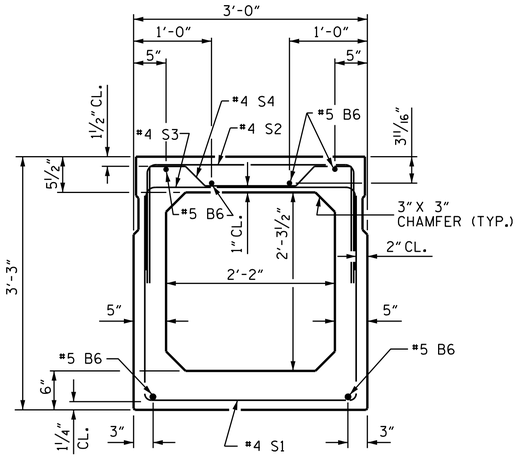

INTERIOR BOX BEAM SECTION

(STRAND LAYOUT NOT SHOWN)

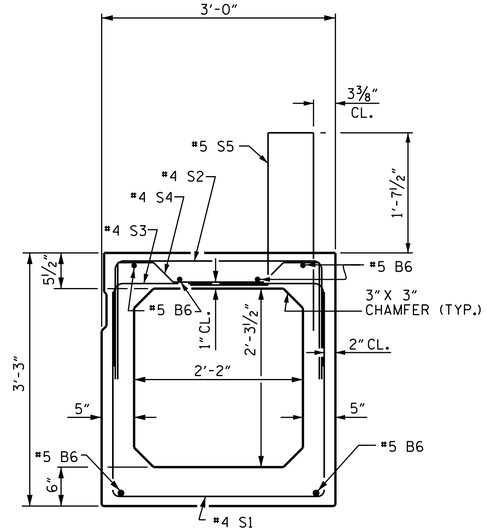

EXTERIOR BOX BEAM SECTION

(STRAND LAYOUT NOT SHOWN)

0.6" Ø LOW RELAXATION STRAND LAYOUT

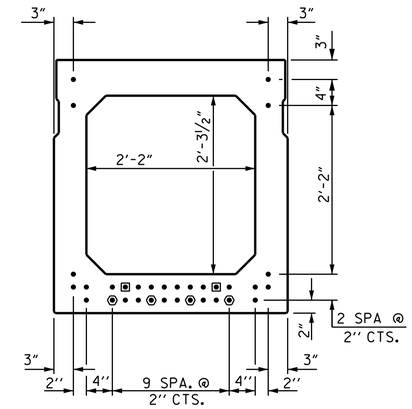

TYPICAL STRAND LOCATION

(32 STRANDS REQUIRED)

DEBONDING LEGEND

- ● FULLY BONDED STRANDS
- ◉ STRANDS DEBONDED FOR 4'-0" FROM END OF GIRDER
- ⬢ STRANDS DEBONDED FOR 12'-0" FROM END OF GIRDER

BOND SHALL BE BROKEN ON STRANDS AS SHOWN FOR THE SPECIFIED LENGTH FROM EACH END OF THE BOX BEAM. SEE STANDARD SPECIFICATIONS ARTICLE 1078-7.

BAR TYPES

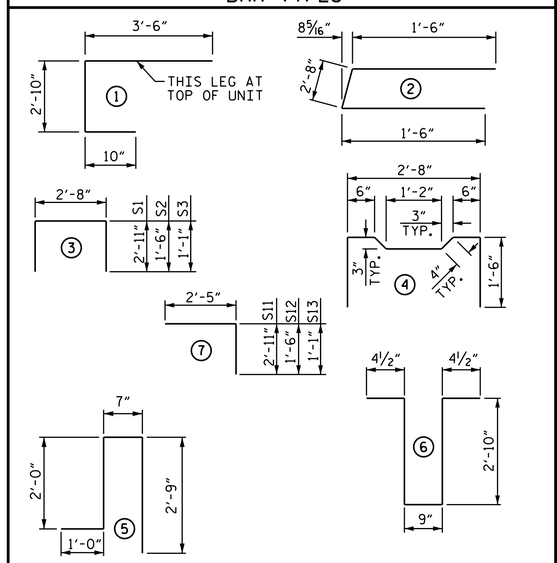

ALL BAR DIMENSIONS ARE OUT TO OUT

BILL OF MATERIAL FOR ONE BOX BEAM SECTION

BAR	NUMBER	SIZE	TYPE	EXTERIOR UNIT LENGTH	EXTERIOR UNIT WEIGHT	INTERIOR UNIT LENGTH	INTERIOR UNIT WEIGHT
A1	10	#5	1	7'-2"	75	7'-2"	75
A2	44	#4	2	5'-8"	167	5'-8"	167
B6	12	#5	STR	50'-11"	637	50'-11"	637
K1	15	#4	6	7'-2"	72	7'-2"	72
K2	10	#4	STR	2'-7"	17	2'-7"	17
S1	82	#4	3	8'-6"	466	8'-6"	466
S2	82	#4	3	5'-8"	310	5'-8"	310
S3	141	#4	3	4'-10"	455	4'-10"	455
S4	59	#4	4	5'-10"	230	5'-10"	230
S11	12	#4	7	5'-4"	43	5'-4"	43
S12	12	#4	7	3'-11"	31	3'-11"	31
S13	12	#4	7	3'-6"	28	3'-6"	28
✱ S5	135	#5	5	6'-4"	892	--	--
REINFORCING STEEL				2531	LBS.	2531	LBS.
✱ EPOXY COATED REINF. STEEL				892	LBS.		
7500 P.S.I. CONCRETE				19.6	CU. YDS.	19.4	CU. YDS.
0.6" Ø L.R. STRANDS				No. 32		No. 32	

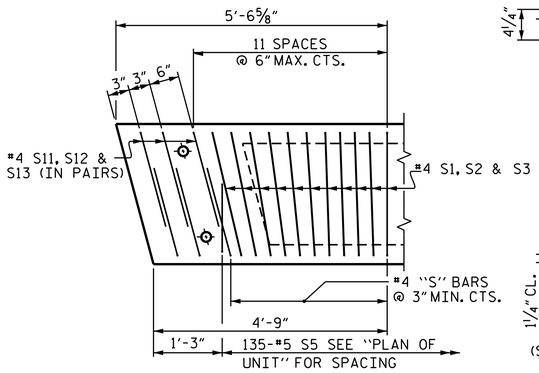

DETAIL "B"

EXTERIOR UNIT SHOWN, INTERIOR UNIT SIMILAR EXCEPT OMIT #5 S5 BARS. "B" BARS AND "A" BARS NOT SHOWN.

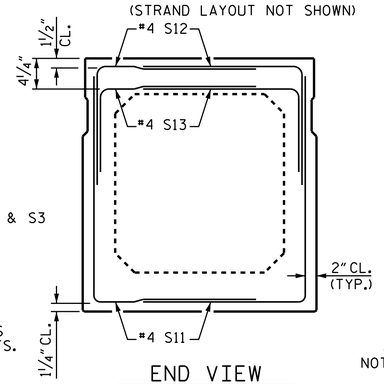

END VIEW

(SHOWING #4 "S" BARS IN END OF BEAM)

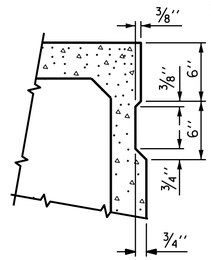

SHEAR KEY DETAIL

NOTE: OMIT SHEAR KEY ON OUTSIDE FACE OF EXTERIOR BOX BEAMS.

GRADE 270 STRANDS	0.6" Ø L.R.
AREA (SQUARE INCHES)	0.217
ULTIMATE STRENGTH (LBS. PER STRAND)	58,600
APPLIED PRESTRESS (LBS. PER STRAND)	43,950

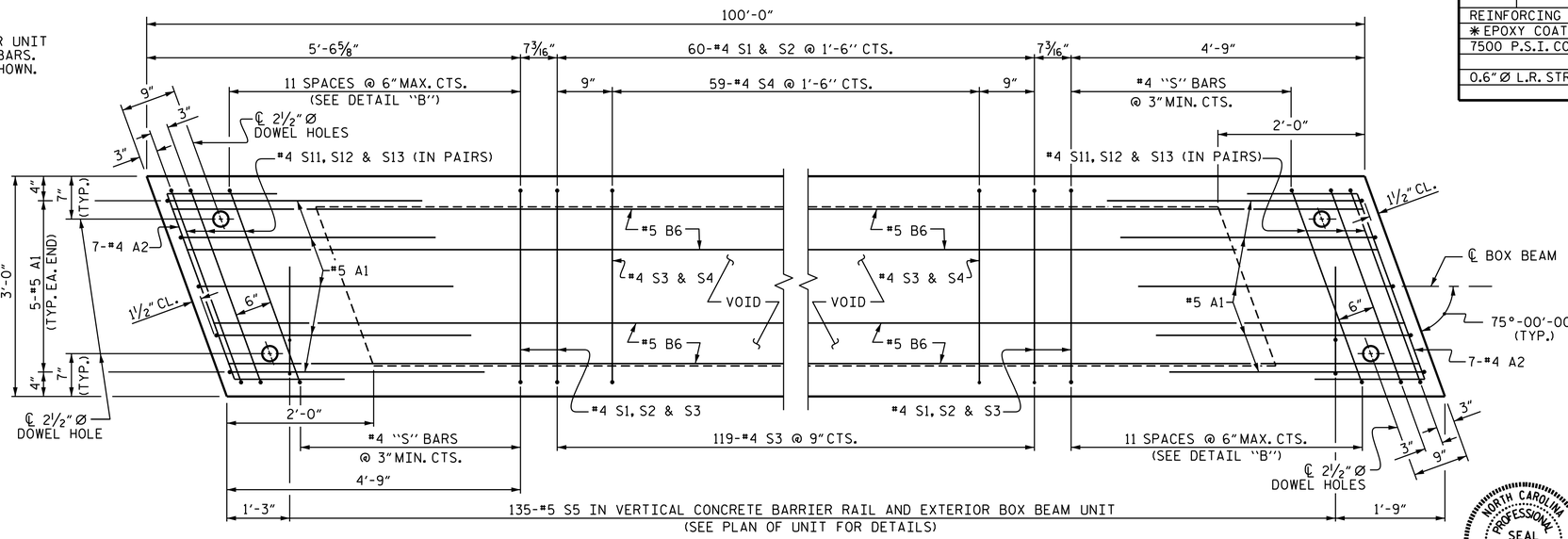

PLAN OF BOX BEAM

EXTERIOR UNIT SHOWN, INTERIOR UNIT SIMILAR EXCEPT OMIT #5 S5 BARS.
FOR LOCATION OF DIAPHRAGMS, SEE PLAN OF UNIT.
FOR REINFORCING STEEL IN DIAPHRAGMS, SEE DIAPHRAGM DETAILS.

NORTH CAROLINA PROFESSIONAL SEAL 14855 ENGINEER DOUGLAS R. CALHOUN

Douglas R. Calhoun
4/23/2015

PROJECT NO. 17BP.7.R.71
ALAMANCE COUNTY
STATION: 15+44.00 -L-

SHEET 3 OF 5

STATE OF NORTH CAROLINA
DEPARTMENT OF TRANSPORTATION
RALEIGH

STANDARD

3'-0" X 3'-3"
PRESTRESSED CONCRETE
BOX BEAM UNIT

REVISIONS								SHEET NO.
NO.	BY:	DATE:	NO.	BY:	DATE:			S-6
1			3					TOTAL SHEETS
2			4					15

STD. NO. 39PCBB6_75S_100L

ASSEMBLED BY :	A. SORSENGINH	DATE :	5/2014
CHECKED BY :	W. F. PARKER	DATE :	6/2014
DRAWN BY :	DGE 11/11		
CHECKED BY :	TMG 11/11		

18-NOV-2014 12:20
S:\DPG2\Doug\DivisionProjects\17BP\17BP_7_R_71\Plans\Superstructure\17BP7R71_SD_BX.dgn
toverette

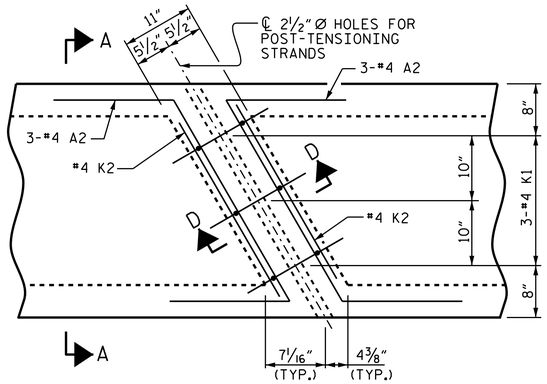

PLAN

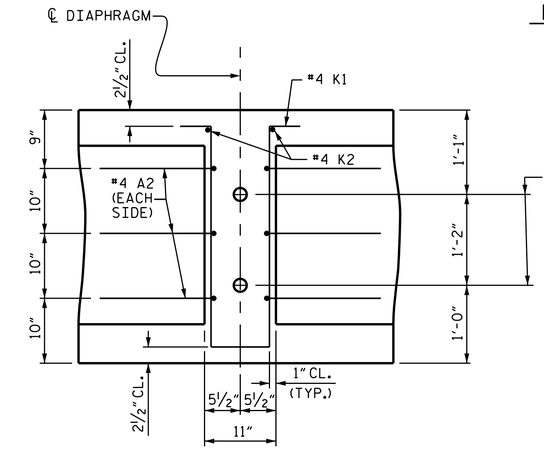

SECTION D-D

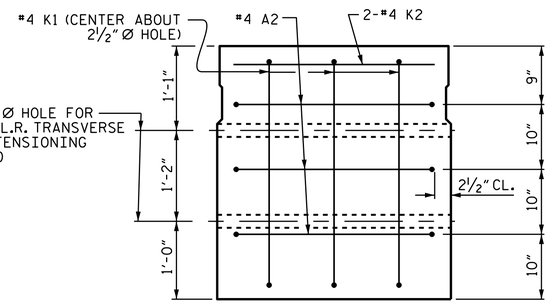

SECTION A-A

VOIDS NOT SHOWN

DOUBLE DIAPHRAGM DETAILS

#4 "S" BARS NOT SHOWN. #4 "S" BARS MAY BE SHIFTED SLIGHTLY TO CLEAR 2½" Ø HOLE.

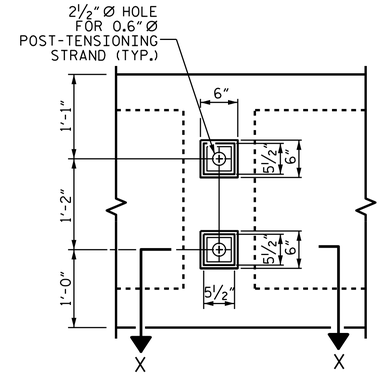

VIEW Y-Y

SHOWING ELEVATION VIEW OF GROUTED RECESS

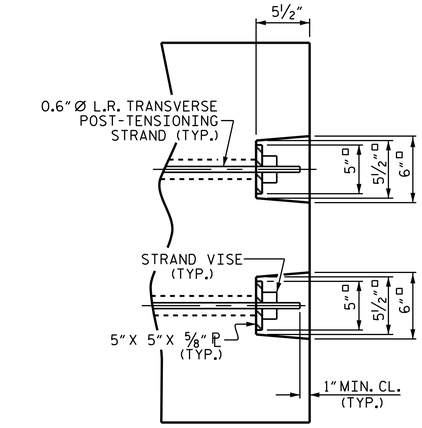

DETAIL "C"

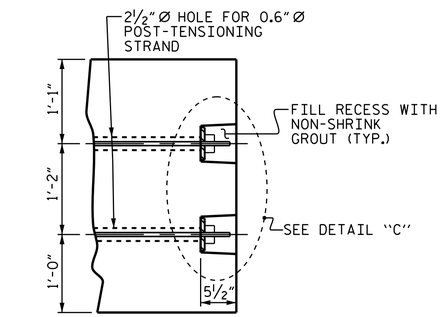

PART SECTION AT RECESS

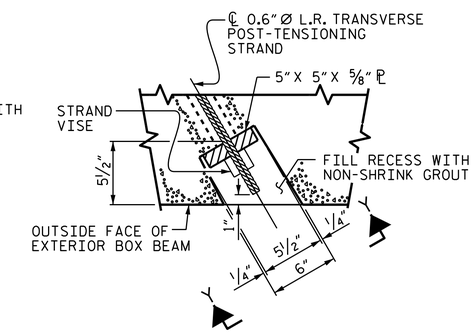

SECTION X-X

SHOWING PLAN VIEW OF GROUTED RECESS

GROUTED RECESS DETAIL AT END OF POST-TENSIONED STRANDS OF EXTERIOR BOX BEAM

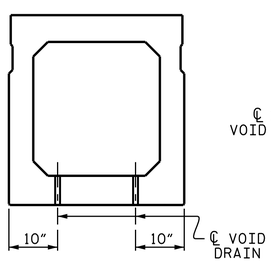

SECTION B-B

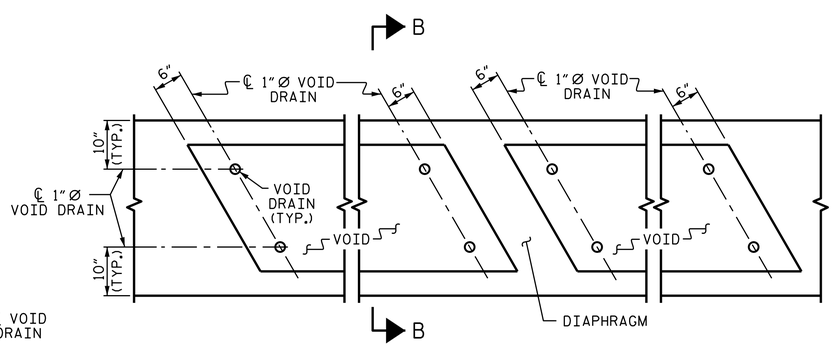

PART PLAN

VOID DRAIN DETAILS

(DIMENSIONS SHOWN ARE TYPICAL FOR EACH VOID)

DEAD LOAD DEFLECTION AND CAMBER	
	3'-0" x 3'-3"
100' BOX BEAM UNIT (NC & SE)	0.6"Ø L.R. STRAND
CAMBER (SLAB ALONE IN PLACE)	3½" ↑
DEFLECTION DUE TO SUPERIMPOSED DEAD LOAD**	1" ↓
FINAL CAMBER	2½" ↑

** INCLUDES FUTURE WEARING SURFACE

PROJECT NO. 17BP.7.R.71

ALAMANCE COUNTY

STATION: 15+44.00 -L-

SHEET 4 OF 5

STATE OF NORTH CAROLINA
DEPARTMENT OF TRANSPORTATION
RALEIGH

STANDARD

3'-0" X 3'-3"
PRESTRESSED CONCRETE
BOX BEAM UNIT

NORTH CAROLINA PROFESSIONAL SEAL 14855 ENGINEER DOUGLAS R. CALHOUN
Douglas R. Calhoun
43015EF0A0F0A00
4/23/2015

REVISIONS								SHEET NO.
NO.	BY:	DATE:	NO.	BY:	DATE:			S-7
1			3					TOTAL SHEETS
2			4					15

ASSEMBLED BY :	A. SORSENGINH	DATE :	5/2014
CHECKED BY :	W. F. PARKER	DATE :	6/2014
DRAWN BY :	DGE 11/11		
CHECKED BY :	TMG 11/11		

18-NOV-2014 12:21
S:\DPG2\Doug\DivisionProjects\17BP\17BP_7_R_71\Plans\Superstructure\17BP7R71_SD_BX.dgn
taverette

STD.NO.39PCBB7_7S

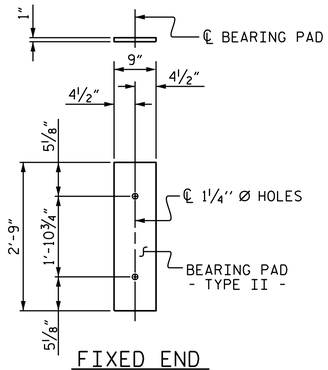

FIXED END

(TYPE II - 22 REQ'D)

ELASTOMERIC BEARING DETAILS

ELASTOMER IN ALL BEARINGS SHALL BE 60 DUROMETER HARDNESS.

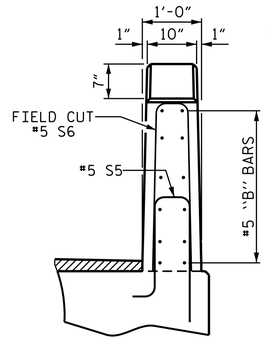

END VIEW

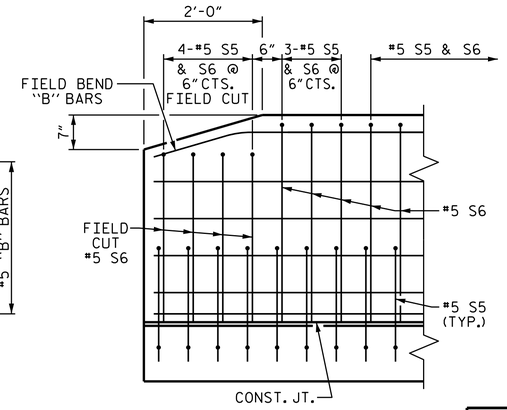

SIDE VIEW

END OF RAIL DETAILS

BOX BEAM UNITS REQUIRED			
	NUMBER	LENGTH	TOTAL LENGTH
EXTERIOR B.B.	2	100'-0"	200'-0"
INTERIOR B.B.	9	100'-0"	900'-0"
TOTAL	11	———	1100'-0"

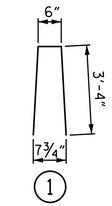

BAR TYPE

BAR DIMENSIONS ARE OUT TO OUT

BILL OF MATERIAL FOR VERTICAL CONCRETE BARRIER RAIL					
BAR	BARS PER PAIR OF EXTERIOR UNITS	SIZE	TYPE	LENGTH	WEIGHT
	100' UNIT				
✱B12	192	#5	STR	14'-1"	2820
✱ S6	270	#5	1	7'-2"	2018
✱ EPOXY COATED REINFORCING STEEL			LBS.		4838
CLASS AA CONCRETE			CU.YDS.		26.9
TOTAL VERTICAL CONCRETE BARRIER RAIL			LN.FT.		200.0

GUTTERLINE ASPHALT THICKNESS & RAIL HEIGHT		
	ASPHALT OVERLAY THICKNESS @ MID-SPAN	RAIL HEIGHT @ MID-SPAN
100' UNITS	2"	3'-8½"

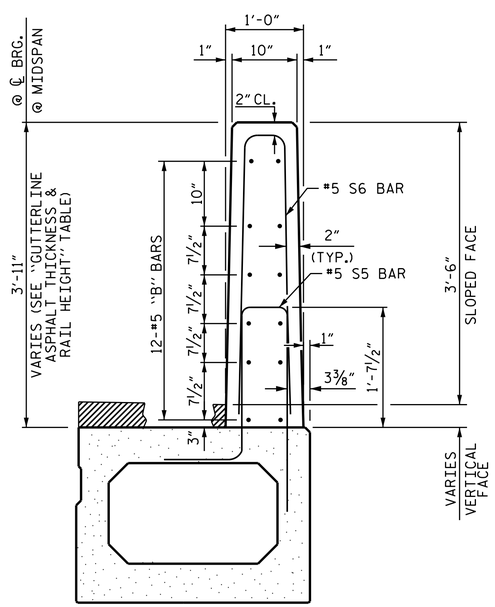

SECTION THRU RAIL

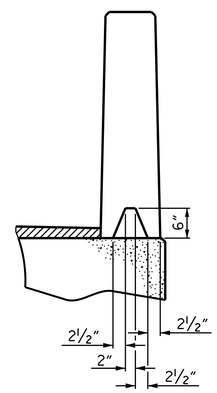

SECTION S-S

AT DAM IN OPEN JOINT
(THIS IS TO BE USED ONLY
WHEN SLIP FORM IS USED)

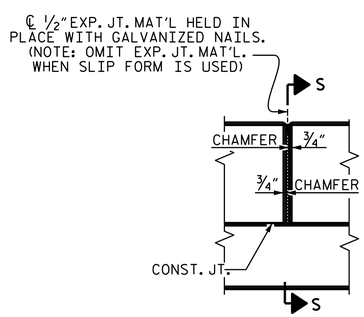

ELEVATION AT EXPANSION JOINTS

VERTICAL CONCRETE BARRIER RAIL DETAILS

PROJECT NO. 17BP.7.R.71

ALAMANCE COUNTY

STATION: 15+44.00 -L-

SHEET 5 OF 5

STATE OF NORTH CAROLINA
DEPARTMENT OF TRANSPORTATION
RALEIGH

STANDARD

3'-0" X 3'-3"
PRESTRESSED CONCRETE
BOX BEAM UNIT

NORTH CAROLINA PROFESSIONAL SEAL 14855 ENGINEER DOUGLAS R. CALHOUN
Douglas R. Calhoun
43015EF5C0E4D4D
4/23/2015

REVISIONS						SHEET NO.
NO.	BY:	DATE:	NO.	BY:	DATE:	S-8
1			3			TOTAL SHEETS
2			4			15

ASSEMBLED BY :	A. SORSENGINH	DATE :	5/2014
CHECKED BY :	W. F. PARKER	DATE :	6/2014
DRAWN BY :	DGE 10/11		
CHECKED BY :	TMG 11/11		

18-NOV-2014 12:21
S:\DPG2\Doug\DivisionProjects\17BP\17BP_7_R_71\Plans\Superstructure\17BP7R71_SD_BX.dgn
taverette

STD. NO. 39PCBB8_75&105S

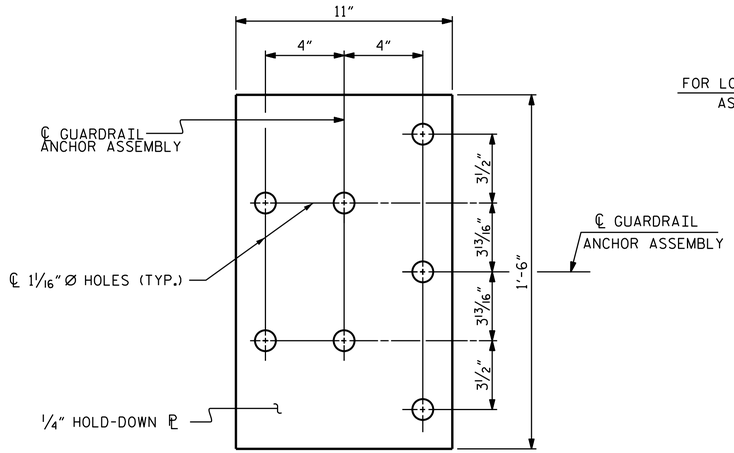

PLAN

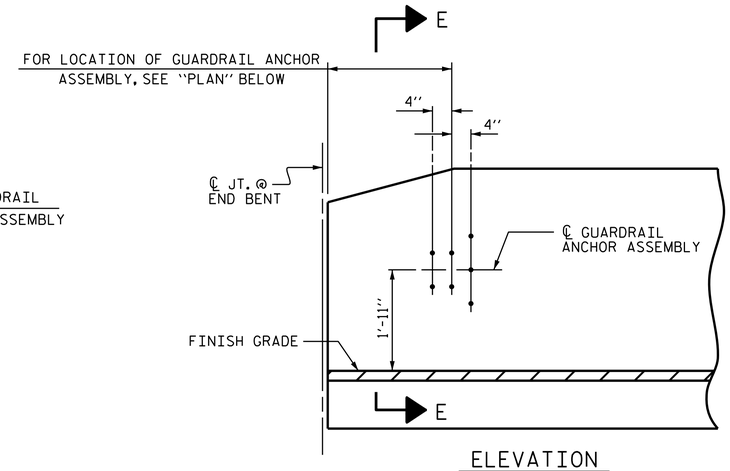

ELEVATION

NOTES

THE GUARDRAIL ANCHOR ASSEMBLY SHALL CONSIST OF A 1/4" HOLD DOWN PLATE AND 7 - 7/8" Ø BOLTS WITH NUTS AND WASHERS.

THE HOLD-DOWN PLATE SHALL CONFORM TO AASHTO M270 GRADE 36. AFTER FABRICATION, THE HOLD-DOWN PLATE SHALL BE HOT-DIP GALVANIZED IN ACCORDANCE WITH AASHTO M111.

BOLTS SHALL CONFORM TO THE REQUIREMENTS OF ASTM A307 AND NUTS SHALL CONFORM TO THE REQUIREMENTS OF AASHTO M291. BOLTS, NUTS AND WASHERS SHALL BE GALVANIZED. (AT THE CONTRACTOR'S OPTION, STAINLESS STEEL BOLTS, NUTS AND WASHERS MAY BE USED AS AN ALTERNATE FOR THE 7/8" Ø GALVANIZED BOLTS, NUTS AND WASHERS. THEY SHALL CONFORM TO OR EXCEED THE MECHANICAL REQUIREMENTS OF ASTM A307. THE USE OF THIS ALTERNATE SHALL BE APPROVED BY THE ENGINEER.)

THE GUARDRAIL ANCHOR ASSEMBLY IS REQUIRED AT ALL POINTS WHERE APPROACH GUARDRAIL IS TO BE ATTACHED TO THE END OF BARRIER RAIL. FOR POINTS OF ATTACHMENT, SEE SKETCH.

AFTER INSTALLATION, THE EXPOSED THREAD OF THE BOLT SHALL BE BURRED WITH A SHARP POINTED TOOL.

THE COST OF THE GUARDRAIL ANCHOR ASSEMBLY SHALL BE INCLUDED IN THE UNIT CONTRACT PRICE BID FOR VERTICAL CONCRETE BARRIER RAIL.

THE VERTICAL REINFORCING BARS MAY BE SHIFTED SLIGHTLY IN THE VERTICAL CONCRETE BARRIER RAIL TO CLEAR ASSEMBLY BOLTS.

THE 1 1/4" Ø HOLES SHALL BE FORMED OR DRILLED WITH A CORE BIT. IMPACT TOOLS WILL NOT BE PERMITTED. ANY CONCRETE DAMAGED BY THIS WORK SHALL BE REPAIRED TO THE SATISFACTION OF THE ENGINEER.

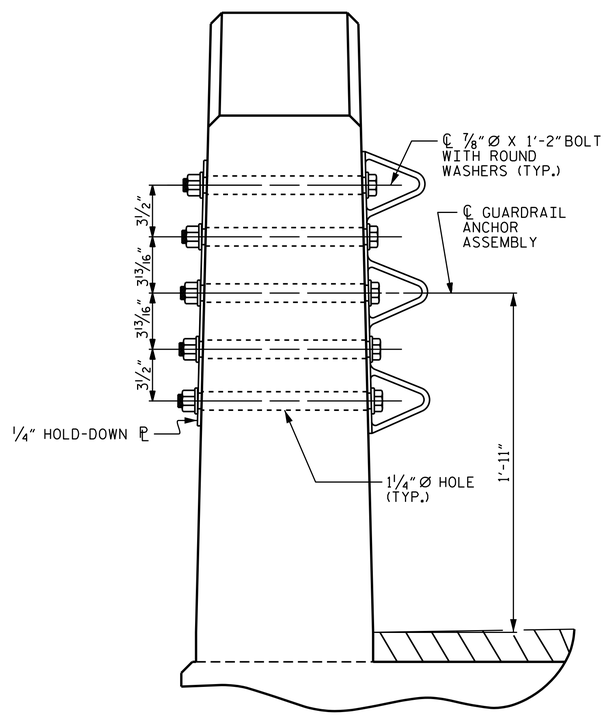

SECTION E-E

GUARDRAIL ANCHOR ASSEMBLY DETAILS

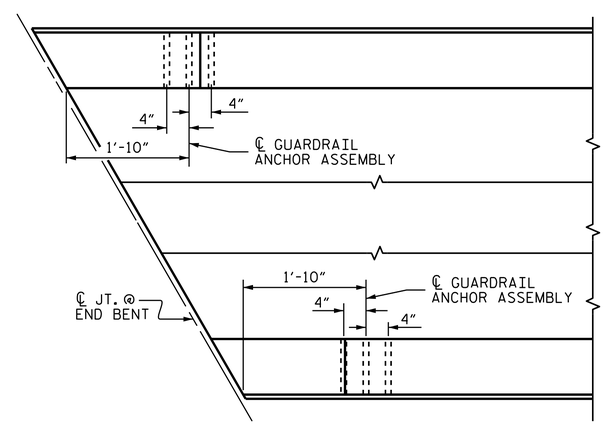

PLAN

LOCATION OF ANCHORS FOR GUARDRAIL

END BENT #1 SHOWN, END BENT #2 SIMILAR.

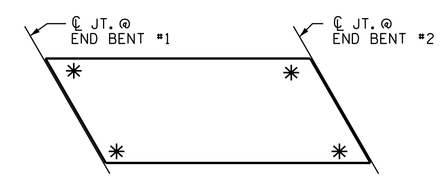

SKETCH SHOWING POINTS OF ATTACHMENT

✳ DENOTES GUARDRAIL ANCHOR ASSEMBLY

PROJECT NO. 17BP.7.R.71

ALAMANCE COUNTY

STATION: 15+44.00 -L-

STATE OF NORTH CAROLINA
DEPARTMENT OF TRANSPORTATION
RALEIGH

STANDARD
GUARDRAIL ANCHORAGE FOR VERTICAL CONCRETE BARRIER RAIL

NORTH CAROLINA PROFESSIONAL SEAL 14855 ENGINEER DOUGLAS R. CALHOUN

Douglas R. Calhoun
43019681DDEB420...
4/23/2015

REVISIONS						SHEET NO.
NO.	BY:	DATE:	NO.	BY:	DATE:	S-9
1			3			TOTAL SHEETS
2			4			15

ASSEMBLED BY :	A. SORSENGINH	DATE :	5/2014
CHECKED BY :	W. F. PARKER	DATE :	6/2014
DRAWN BY : MAA 5/10	REV. 10/1/11	MAA/GM	
CHECKED BY : GM 5/10	REV. 12/5/11	MAA/GM	
	REV. 6/13	MAA/GM	

18-NOV-2014 12:22
S:\DPG2\Doug\DivisionProjects\17BP\17BP_7_R_71\Plans\Miscellaneous\17BP7R71_SD_GR.dgn
taverette

STD. NO. GRA3

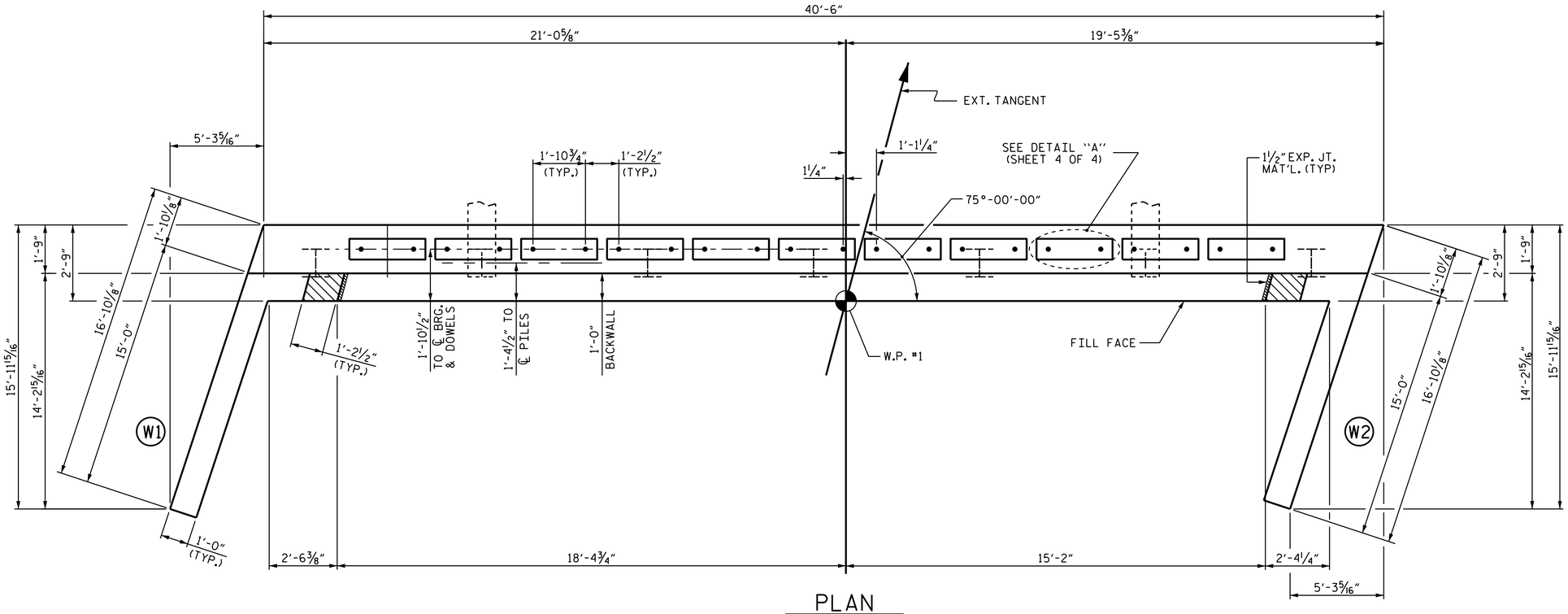

PLAN

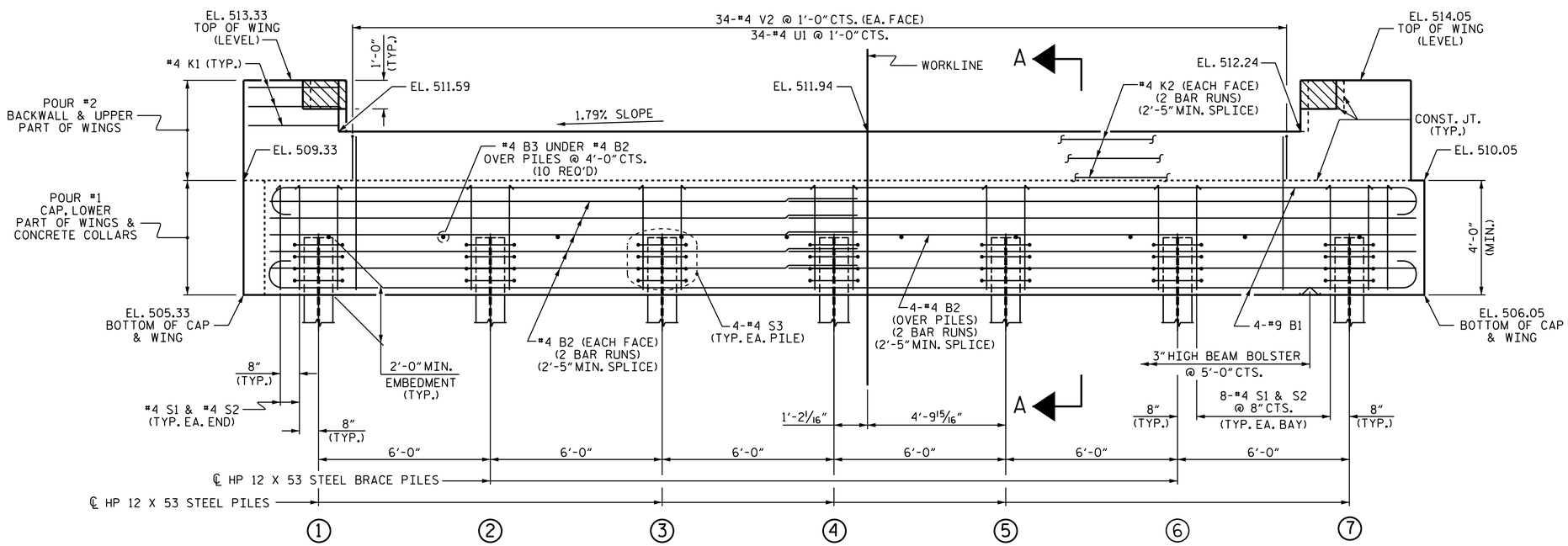

ELEVATION

WINGS NOT SHOWN FOR CLARITY.
FOR SECTION A-A, SEE SHEET 4 OF 4.
CONCRETE COLLARS FOR STEEL PILES NOT SHOWN IN PLAN AND ELEVATION VIEWS FOR CLARITY.
SEE "CORROSION PROTECTION FOR STEEL PILES DETAIL", SHEET 4 OF 4.

NOTES

STIRRUPS IN CAP MAY BE SHIFTED AS NECESSARY TO CLEAR DOWELS.

THE CONCRETE IN THE SHADED AREA OF THE WING SHALL BE POURED AFTER THE VERTICAL CONCRETE BARRIER RAIL IS CAST IF SLIP FORMING IS USED.

FOR PILE SPLICE DETAILS, SEE SHEET 4 OF 4.

FOR WING DETAILS, SEE SHEET 3 OF 4.

TOP OF PILE ELEVATIONS	
1	507.38
2	507.49
3	507.60
4	507.70
5	507.81
6	507.92
7	508.03

PROJECT NO. 17BP.7.R.71
ALAMANCE COUNTY
STATION: 15+44.00 -L-

SHEET 1 OF 4

STATE OF NORTH CAROLINA
DEPARTMENT OF TRANSPORTATION
RALEIGH

SUBSTRUCTURE

END BENT 1

NORTH CAROLINA PROFESSIONAL SEAL 14855 ENGINEER DOUGLAS R. CALLOUN
Douglas R. Calloun
4/23/2015

REVISIONS						
NO.	BY:	DATE:	NO.	BY:	DATE:	
1			3			
2			4			

SHEET NO. S-10
TOTAL SHEETS 15

ASSEMBLED BY : A. SORSENGINH DATE : 5/2014
CHECKED BY : W. F. PARKER DATE : 6/2014
DRAWN BY : WJH 12/11
CHECKED BY : AAC 12/11

18-NOV-2014 12:23
S:\DPG2\Doug\DivisionProjects\17BP\17BP_7_R_71\Plans\Substructure\17BP7R71_SD_E*.dgn
taverette

STD. NO. EB_33_75S4_39BB

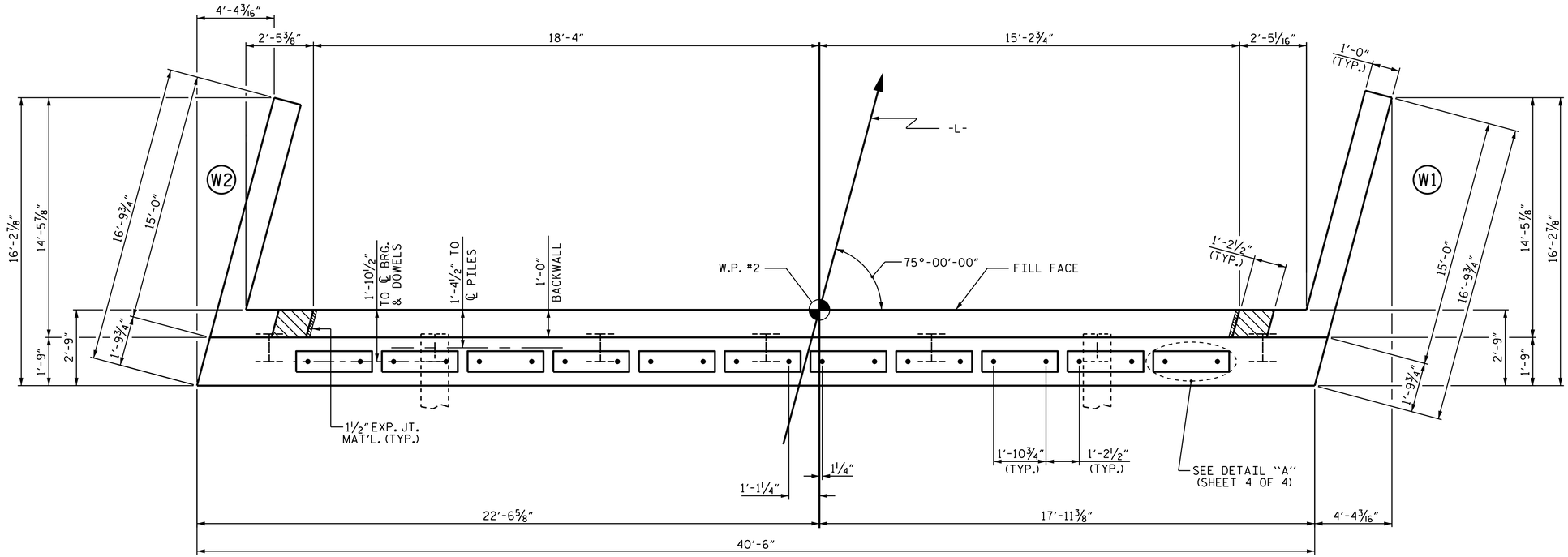

PLAN

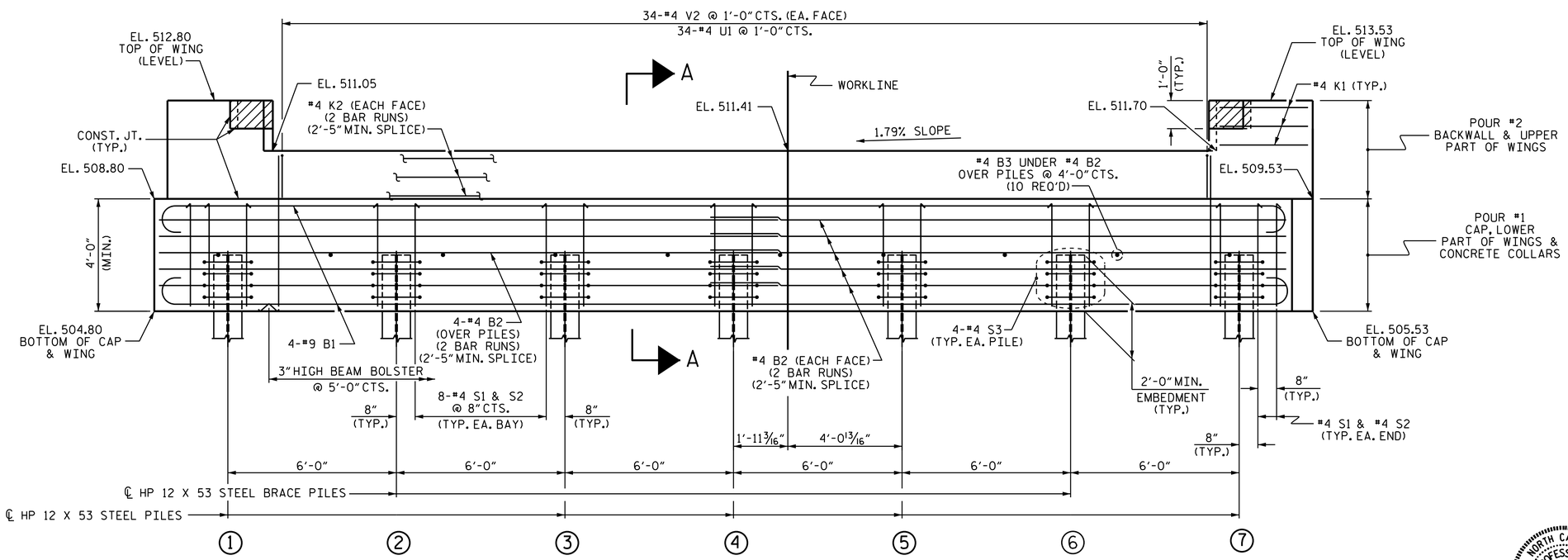

ELEVATION

WINGS NOT SHOWN FOR CLARITY.
FOR SECTION A-A, SEE SHEET 4 OF 4.
CONCRETE COLLARS FOR STEEL PILES NOT SHOWN IN PLAN AND ELEVATION VIEWS FOR CLARITY.
SEE "CORROSION PROTECTION FOR STEEL PILES DETAIL", SHEET 4 OF 4.

NOTES

STIRRUPS IN CAP MAY BE SHIFTED AS NECESSARY TO CLEAR DOWELS.

THE CONCRETE IN THE SHADED AREA OF THE WING SHALL BE POURED AFTER THE VERTICAL CONCRETE BARRIER RAIL IS CAST IF SLIP FORMING IS USED.

FOR PILE SPLICE DETAILS, SEE SHEET 4 OF 4.

FOR WING DETAILS, SEE SHEET 3 OF 4.

TOP OF PILE ELEVATIONS	
1	506.85
2	506.96
3	507.06
4	507.17
5	507.28
6	507.39
7	507.49

PROJECT NO. 17BP.7.R.71
ALAMANCE COUNTY
STATION: 15+44.00 -L-

SHEET 2 OF 4

STATE OF NORTH CAROLINA
DEPARTMENT OF TRANSPORTATION
RALEIGH

SUBSTRUCTURE
END BENT 2

NORTH CAROLINA PROFESSIONAL SEAL 14855 ENGINEER DOUGLAS R. CALHOUN
Douglas R. Calhoun
43018 REGISTERED
4/23/2015

REVISIONS						
NO.	BY:	DATE:	NO.	BY:	DATE:	
1			3			
2			4			

SHEET NO. S-11
TOTAL SHEETS 15

ASSEMBLED BY : A. SORSENGINH DATE : 5/2014
CHECKED BY : W. F. PARKER DATE : 6/2014
DRAWN BY : WJH 12/11
CHECKED BY : AAC 12/11

18-NOV-2014 12:24
S:\DPG2\Doug\DivisionProjects\17BP\17BP_7_R_71\Plans\Substructure\17BP7R71_SD_E*.dgn
taverette

STD. NO. EB_33_75S4_39BB

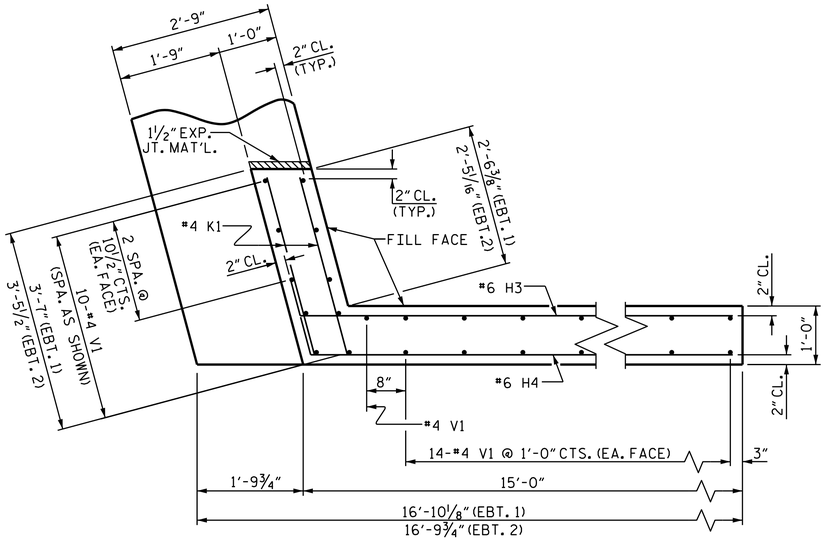

PLAN OF WING (W1)

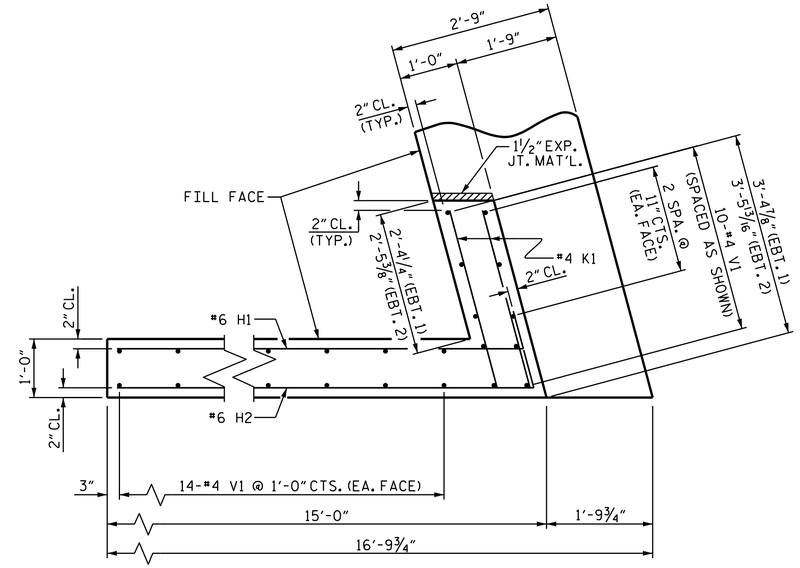

PLAN OF WING (W2)

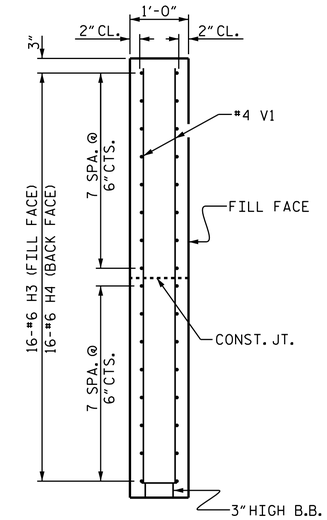

SECTION X-X

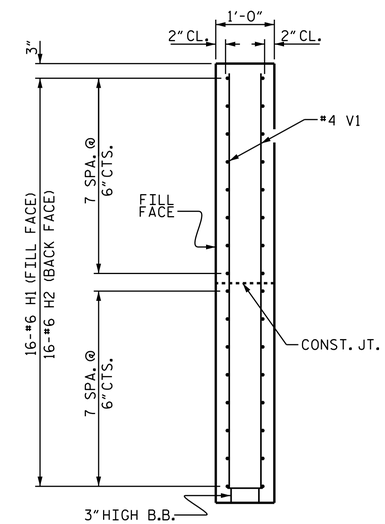

SECTION Y-Y

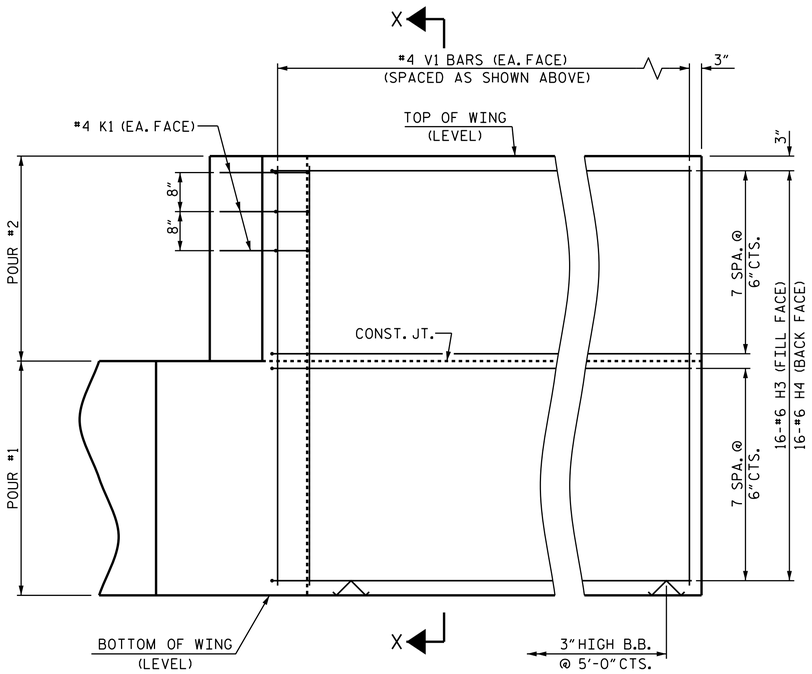

ELEVATION OF WING (W1)

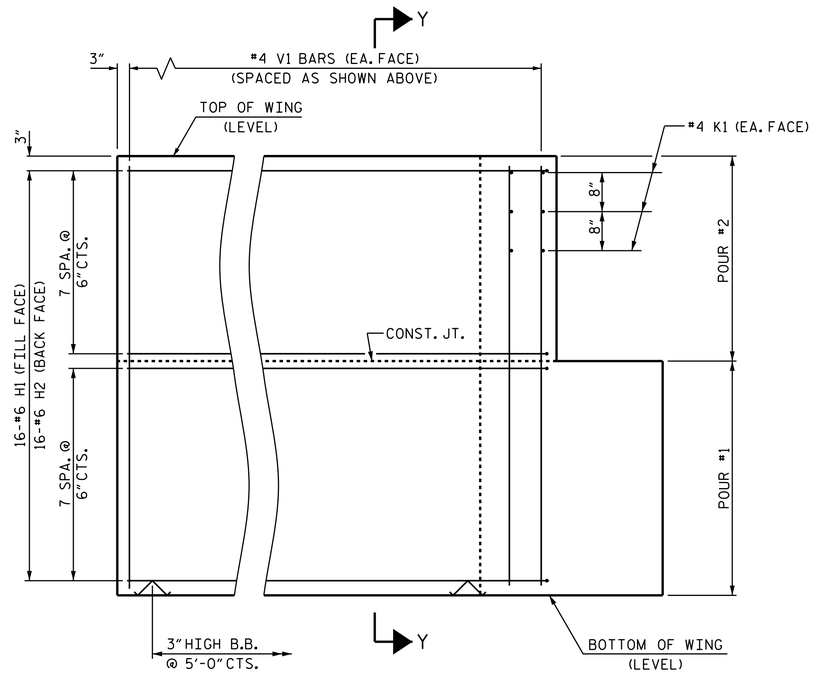

ELEVATION OF WING (W2)

WING DETAILS

PROJECT NO. 17BP.7.R.71
ALAMANCE COUNTY
STATION: 15+44.00 -L-

SHEET 3 OF 4

STATE OF NORTH CAROLINA
DEPARTMENT OF TRANSPORTATION
RALEIGH

SUBSTRUCTURE

END BENT
WING DETAILS

NORTH CAROLINA PROFESSIONAL SEAL 14855 ENGINEER DOUGLAS R. CALHOUN
Douglas R. Calhoun
4/23/2015

ASSEMBLED BY : A. SORSENGINH	DATE : 5/2014
CHECKED BY : W. F. PARKER	DATE : 6/2014
DRAWN BY : WJH 12/11	
CHECKED BY : AAC 12/11	

REVISIONS						SHEET NO.
NO.	BY:	DATE:	NO.	BY:	DATE:	S-12
1			3			TOTAL SHEETS
2			4			15

18-NOV-2014 12:24
S:\DPG2\Doug\DivisionProjects\17BP\17BP_7_R_71\Plans\Substructure\17BP7R71_SD_E*.dgn
taverette

STD. NO. EB_33_75S4_39BB

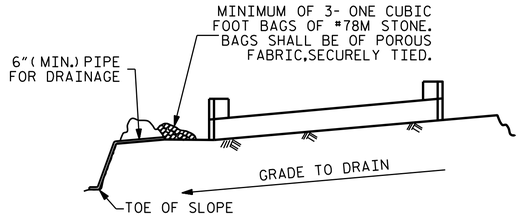

BAGGED STONE AND PIPE SHALL BE PLACED IMMEDIATELY AFTER COMPLETION OF END BENT EXCAVATION. PIPE MAY BE EITHER CONCRETE, CORRUGATED STEEL, CORRUGATED ALUMINUM ALLOY, OR CORRUGATED PLASTIC. PERFORATED PIPE WILL NOT BE ALLOWED.

BAGGED STONE SHALL REMAIN IN PLACE UNTIL THE ENGINEER DIRECTS THAT IT BE REMOVED. THE CONTRACTOR SHALL REMOVE AND DISPOSE OF SILT ACCUMULATIONS AT BAGGED STONE WHEN SO DIRECTED BY THE ENGINEER. BAGS SHALL BE REMOVED AND REPLACED WHENEVER THE ENGINEER DETERMINES THAT THEY HAVE DETERIORATED AND LOST THEIR EFFECTIVENESS.

NO SEPARATE PAYMENT WILL BE MADE FOR THIS WORK AND THE ENTIRE COST OF THIS WORK SHALL BE INCLUDED IN THE UNIT CONTRACT PRICE BID FOR THE SEVERAL PAY ITEMS.

TEMPORARY DRAINAGE AT END BENT

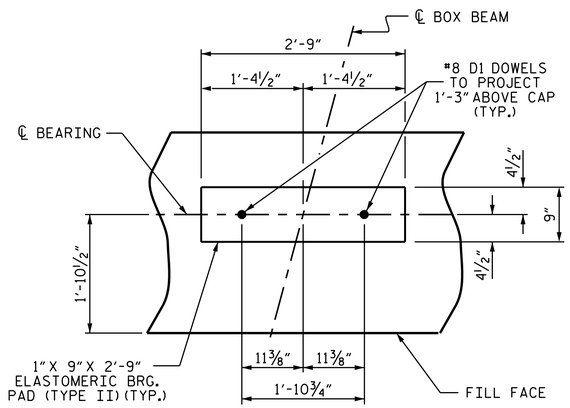

DETAIL "A"

(END BENT No. 1 SHOWN, END BENT No. 2 SIMILAR BY ROTATION)

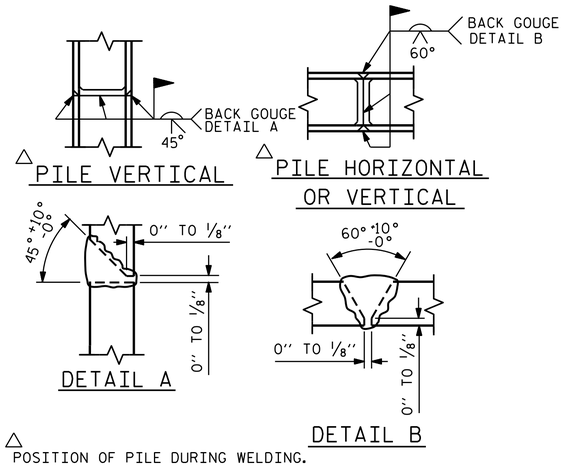

△ POSITION OF PILE DURING WELDING.

PILE SPLICE DETAILS

BAR TYPES

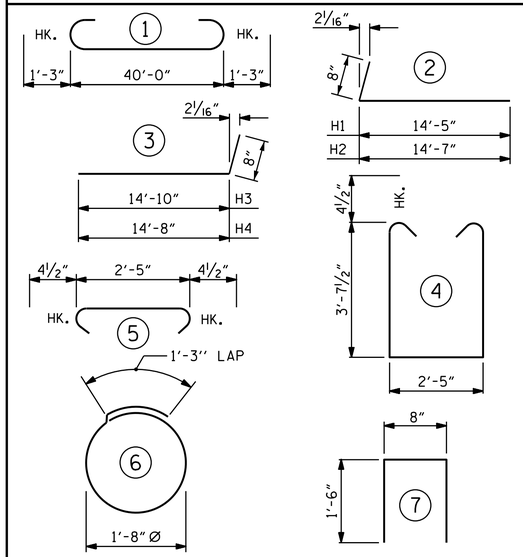

ALL BAR DIMENSIONS ARE OUT TO OUT.

END BENT No. 1	END BENT No. 2
HP 12 X 53 STEEL PILES	HP 12 X 53 STEEL PILES
NO: 7 LIN. FT.= 140	NO: 7 LIN. FT.= 105
STEEL PILES POINTS NO: 7	STEEL PILES POINTS NO: 7

BILL OF MATERIAL FOR ONE END BENT

BAR	NO.	SIZE	TYPE	LENGTH	WEIGHT
B1	8	#9	1	42'-6"	1156
B2	28	#4	STR	21'-4"	399
B3	10	#4	STR	2'-5"	16
D1	22	#8	STR	2'-3"	132
H1	16	#6	2	15'-1"	362
H2	16	#6	2	15'-3"	366
H3	16	#6	3	15'-6"	372
H4	16	#6	3	15'-4"	368
K1	12	#4	STR	3'-1"	25
K2	12	#4	STR	21'-4"	171
S1	52	#4	4	10'-5"	362
S2	52	#4	5	3'-2"	110
S3	28	#4	6	6'-6"	122
U1	34	#4	7	3'-8"	83
V1	77	#4	STR	7'-8"	394
V2	68	#4	STR	5'-10"	265
REINFORCING STEEL (FOR ONE END BENT)					4703 LBS.

CLASS A CONCRETE BREAKDOWN (FOR ONE END BENT)

POUR #1	CAP, LOWER PART OF WINGS & COLLARS	21.9 C.Y.
POUR #2	BACKWALL & UPPER PART OF WINGS	7.9 C.Y.
TOTAL CLASS A CONCRETE		29.8 C.Y.

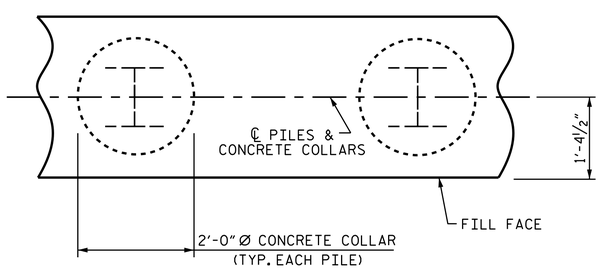

PLAN

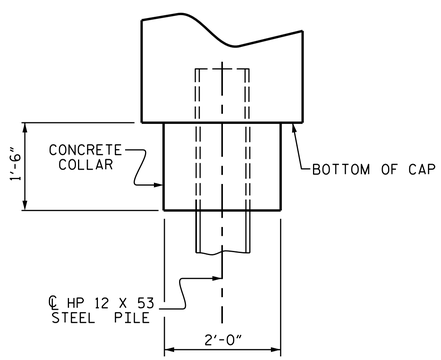

ELEVATION

CORROSION PROTECTION FOR STEEL PILES DETAIL

(END BENT No. 1 SHOWN, END BENT No. 2 SIMILAR BY ROTATION)

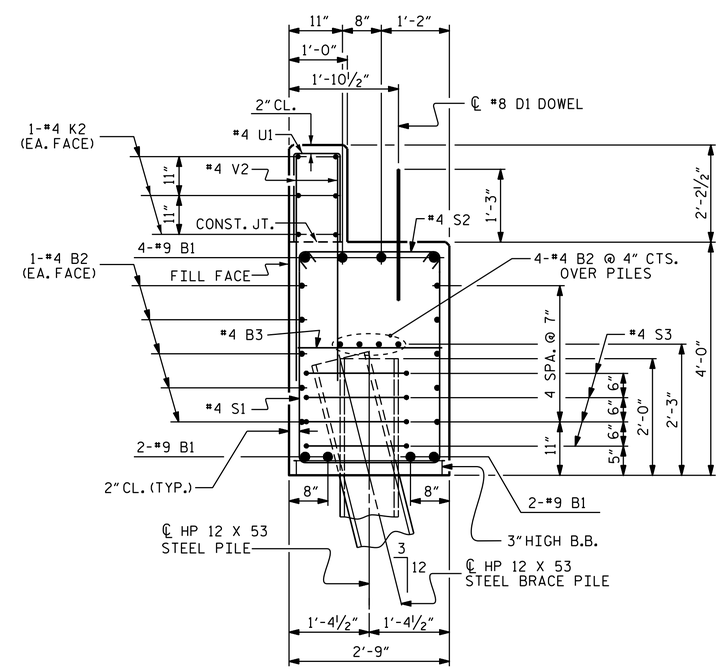

SECTION A-A

(CONCRETE COLLAR NOT SHOWN FOR CLARITY. SEE "CORROSION PROTECTION FOR STEEL PILES DETAIL.")

PROJECT NO. 17BP.7.R.71

ALAMANCE COUNTY

STATION: 15+44.00 -L-

SHEET 4 OF 4

STATE OF NORTH CAROLINA
DEPARTMENT OF TRANSPORTATION
RALEIGH

SUBSTRUCTURE

END BENTS 1 & 2 DETAILS

NORTH CAROLINA PROFESSIONAL SEAL 14855 ENGINEER DOUGLAS R. CALHOUN
Douglas R. Calhoun
430196F0D5ED429...
4/23/2015

REVISIONS						
NO.	BY:	DATE:	NO.	BY:	DATE:	
1			3			
2			4			

SHEET NO. S-13
TOTAL SHEETS 15

ASSEMBLED BY :	A. SORSENGINH	DATE :	5/2014
CHECKED BY :	W. F. PARKER	DATE :	6/2014
DRAWN BY :	WJH		12/11
CHECKED BY :	AAC		12/11

18-NOV-2014 12:25
S:\DPG2\Doug\DivisionProjects\17BP\17BP_7_R_71\Plans\Substructure\17BP7R71_SD_E*.dgn
taverette

STD. NO. EB_33_75S4_39BB

ESTIMATED QUANTITIES		
BRIDGE @ STA. 15+44.00 -L-	RIP RAP CLASS II (2'-0" THICK)	GEOTEXTILE FOR DRAINAGE
	TONS	SQUARE YARDS
END BENT #1	85	95
END BENT #2	85	95

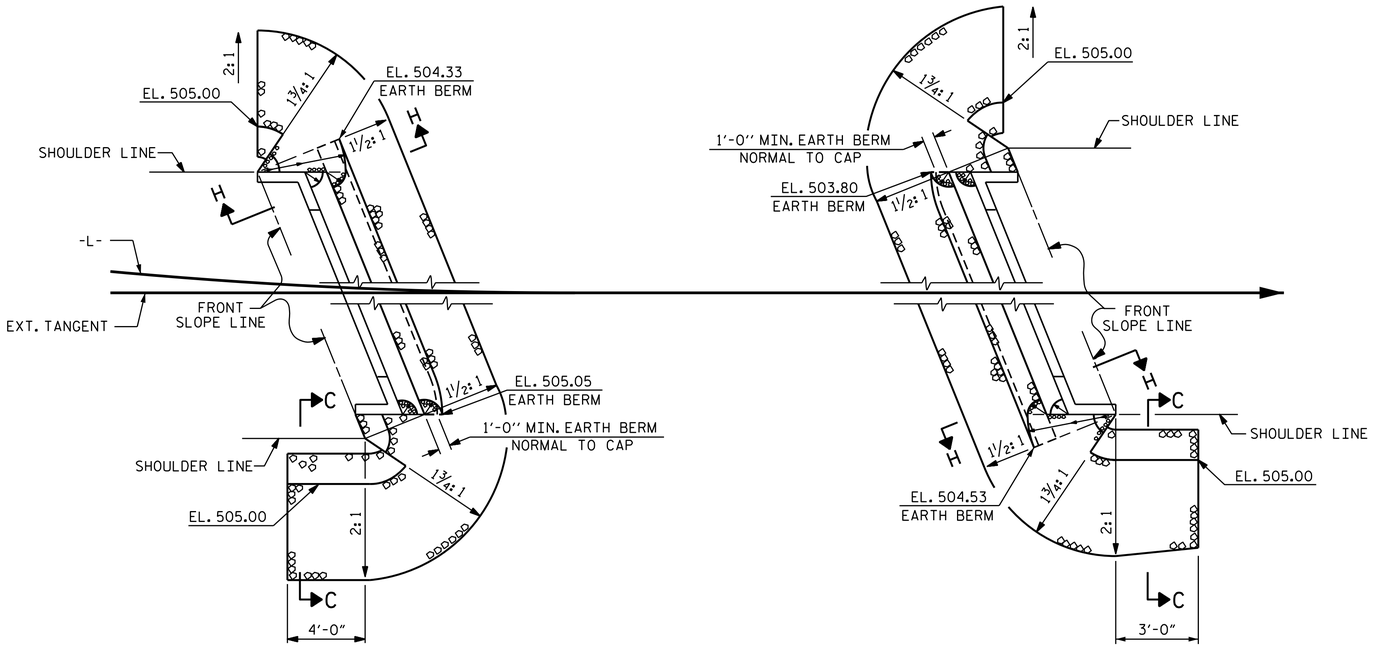

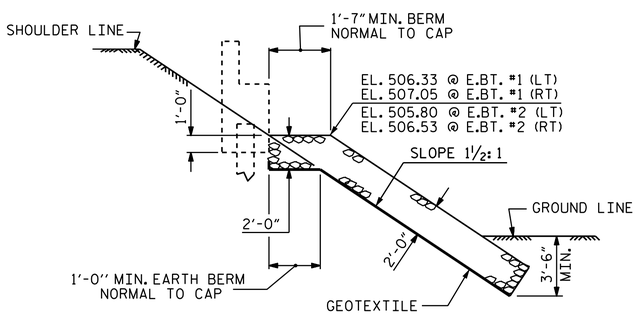

SECTION H-H

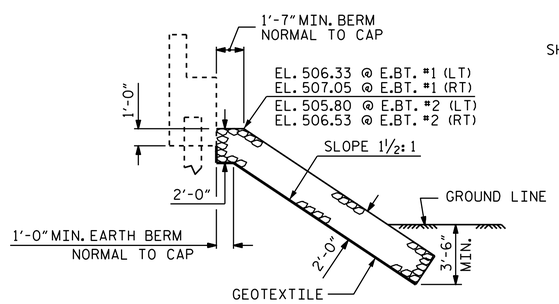

℄ SECTION
BERM RIP RAPPED

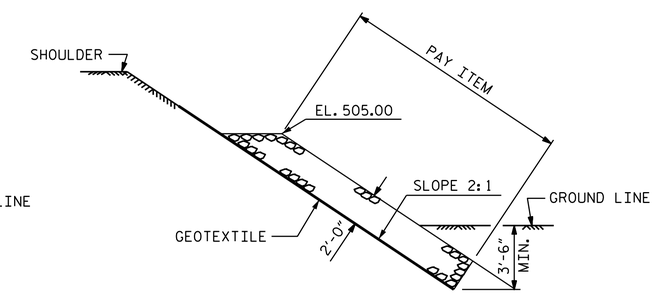

SECTION C-C

PROJECT NO. 17BP.7.R.71
ALAMANCE COUNTY
STATION: 15+44.00 -L-

STATE OF NORTH CAROLINA
DEPARTMENT OF TRANSPORTATION
RALEIGH
STANDARD
RIP RAP DETAILS

NORTH CAROLINA PROFESSIONAL SEAL 14855 ENGINEER DOUGLAS R. CALHOUN
Douglas R. Calhoun
4/23/2015

REVISIONS							
NO.	BY:	DATE:	NO.	BY:	DATE:	SHEET NO. S-14	
1			3			TOTAL SHEETS 15	
2			4				

ASSEMBLED BY :	A. SORSENGINH	DATE :	5/2014
CHECKED BY :	W. F. PARKER	DATE :	6/2014
DRAWN BY : REK 1/84	REV. 5/1/06R		TLA/GM
CHECKED BY : RDU 1/84	REV. 10/1/11		MAA/GM
	REV. 12/21/11		MAA/GM

18-NOV-2014 12:26
S:\DPG2\Doug\DivisionProjects\17BP\17BP_7_R_71\Plans\Miscellaneous\17BP7R71_SD_RR.dgn
taverette

STD. NO. RR1

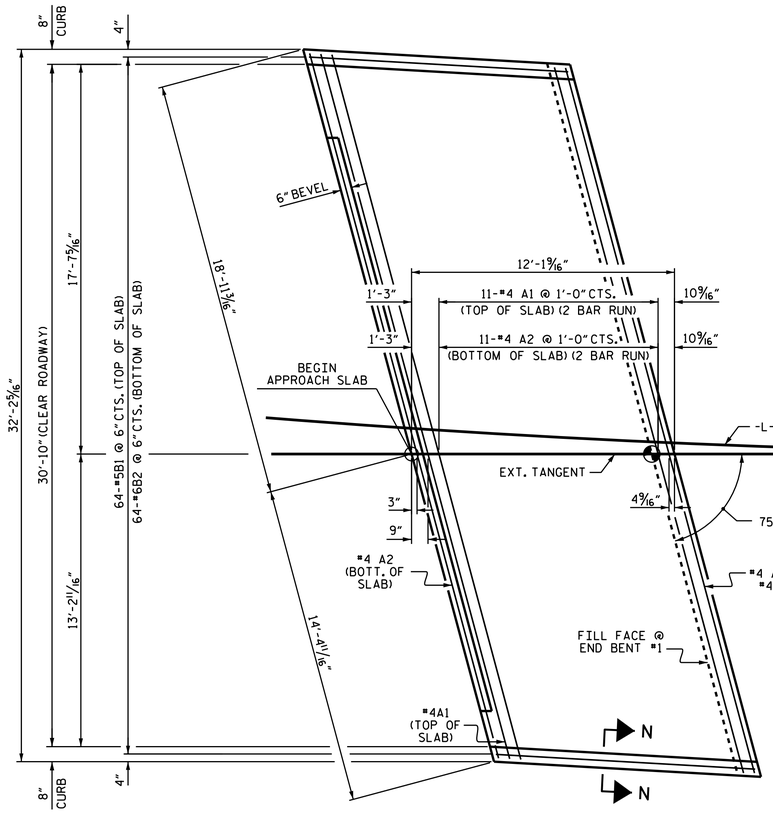

PLAN @ END BENT #1

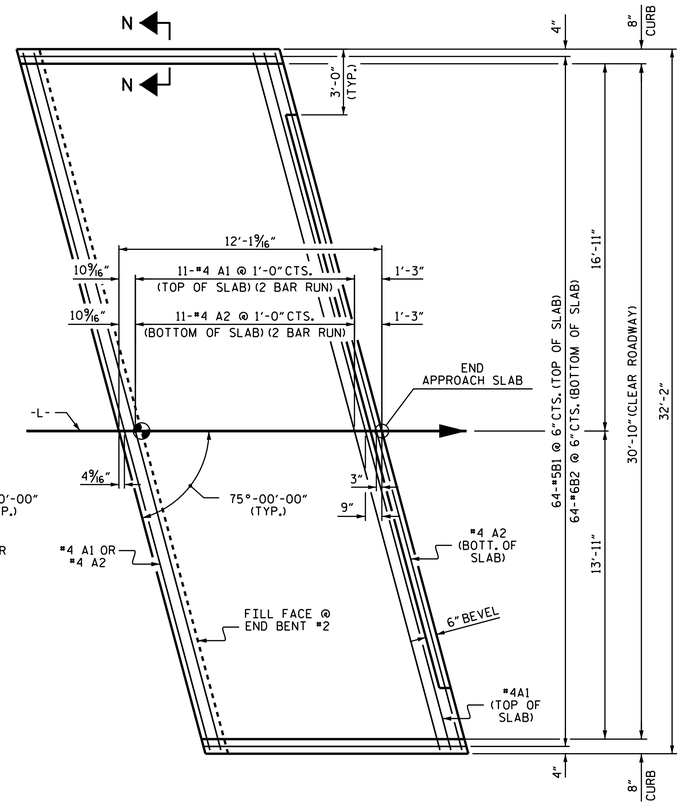

PLAN @ END BENT #2

DIMENSIONS SHOWN ARE TYPICAL FOR BOTH APPROACH SLABS

NOTES

FOR BRIDGE APPROACH FILL INCLUDING GEOTEXTILE, 4" Ø DRAINAGE PIPE, AND #78M STONE BACKFILL, SEE ROADWAY PLANS.

GEOTEXTILE SHALL BE TYPE I IN ACCORDANCE WITH THE STANDARD SPECIFICATIONS SECTION 1056.

#78M STONE BACKFILL (CLASS V SELECT MATERIAL) SHALL BE IN ACCORDANCE WITH STANDARD SPECIFICATIONS SECTION 1016.

#78M STONE BACKFILL IS TO BE CONTINUOUS ALONG FILL FACE OF BACKWALL FROM OUTSIDE EDGE TO OUTSIDE EDGE OF APPROACH SLAB.

FOR THE 4" Ø DRAINAGE PIPE OUTLET(S), SEE ROADWAY STANDARD DRAWINGS.

AREA BETWEEN THE WINGWALL AND APPROACH SLAB SHALL BE GRADED TO DRAIN THE WATER AWAY FROM THE FILL FACE OF THE BRIDGE AND SHALL BE PAVED. SEE ROADWAY PLANS.

APPROACH SLAB GROOVING IS NOT REQUIRED.

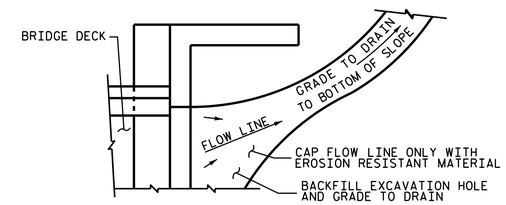

NOTE: IF THE APPROACH SLAB IS NOT CONSTRUCTED IMMEDIATELY AFTER THE BACKFILLING OF THE END BENT EXCAVATION, GRADE TO DRAIN TO THE BOTTOM OF THE SLOPE AND PROVIDE EROSION RESISTANT MATERIAL, SUCH AS FIBERGLASS ROVING OR AS DIRECTED BY THE ENGINEER TO PREVENT SOIL EROSION AND TO PROTECT THE AREA ADJACENT TO THE STRUCTURE. THE CONTRACTOR WILL BE REQUIRED TO REMOVE THESE MATERIALS PRIOR TO CONSTRUCTION OF THE APPROACH SLAB.

TEMPORARY DRAINAGE DETAIL

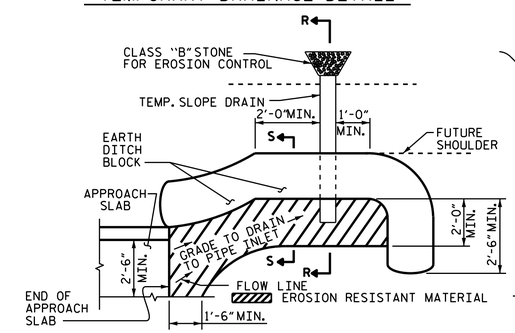

NOTE: IMMEDIATELY AFTER THE CONSTRUCTION OF THE APPROACH SLAB, THE CONTRACTOR SHALL PROVIDE TEMPORARY BERM AND SLOPE DRAIN. CONTRACTOR SHALL GRADE TO PIPE INLET AND PROVIDE EROSION RESISTANT MATERIAL AS SHOWN. THE EROSION RESISTANT MATERIAL SHALL BE EITHER 1) ASPHALT PLANT MIX, TYPE 1 OR TYPE 2, MIN. 2" DEPTH, 2) EROSION CONTROL MAT, OR 3) CONCRETE, AS DIRECTED BY THE ENGINEER. THE SLOPE DRAIN SHALL CONSIST OF A NON-PERFORATED TEMPORARY DRAINAGE PIPE, 12 INCHES IN DIAMETER.

PLAN VIEW

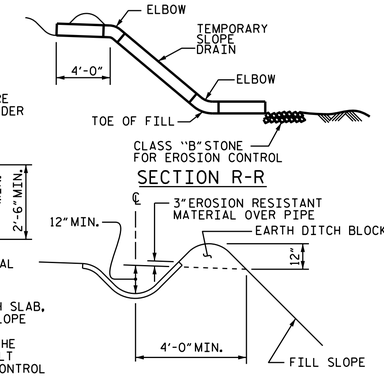

SECTION S-S

TEMPORARY BERM AND SLOPE DRAIN DETAILS

(TO BE USED WHEN SHOULDER BERM GUTTER IS REQUIRED)

BILL OF MATERIAL

APPROACH SLAB AT EB #1

BAR	NO.	SIZE	TYPE	LENGTH	WEIGHT
✱A1	26	#4	STR	17'-6"	304
A2	26	#4	STR	17'-5"	302
✱B1	64	#5	STR	11'-1"	740
B2	64	#6	STR	11'-7"	1113
REINFORCING STEEL				LBS.	1415
✱EPOXY COATED REINFORCING STEEL				LBS.	1044
CLASS AA CONCRETE				C.Y.	17.2

APPROACH SLAB AT EB #2

BAR	NO.	SIZE	TYPE	LENGTH	WEIGHT
✱A1	26	#4	STR	17'-6"	304
A2	26	#4	STR	17'-5"	302
✱B1	64	#5	STR	11'-1"	740
B2	64	#6	STR	11'-7"	1113
REINFORCING STEEL				LBS.	1415
✱EPOXY COATED REINFORCING STEEL				LBS.	1044
CLASS AA CONCRETE				C.Y.	17.2

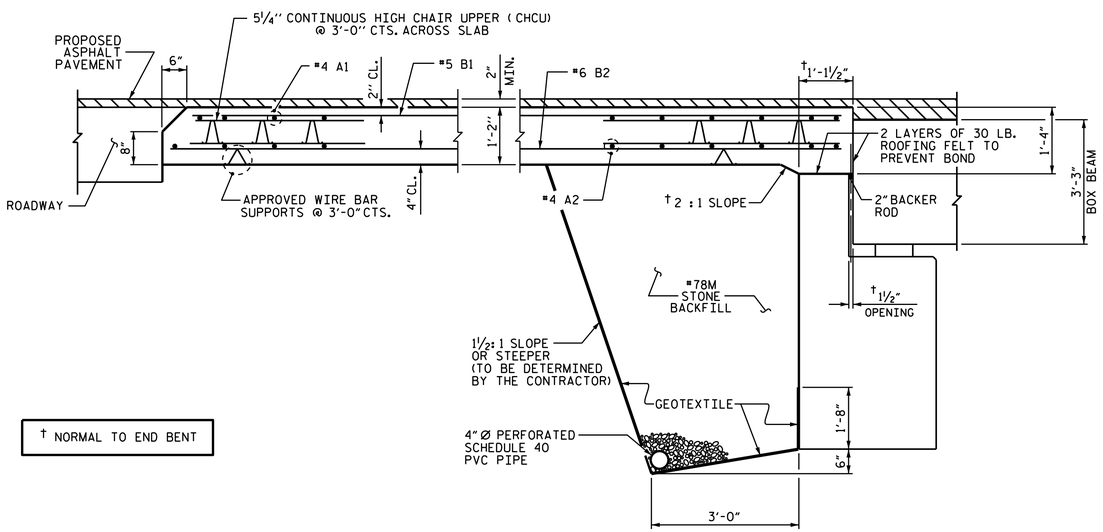

† NORMAL TO END BENT

SECTION THRU SLAB

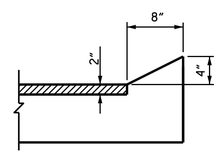

SECTION N-N

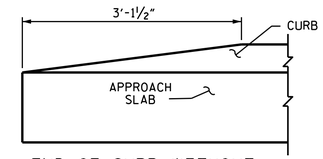

END OF CURB WITHOUT SHOULDER BERM GUTTER

CURB DETAILS

SPLICE LENGTHS		
BAR SIZE	EPOXY COATED	UNCOATED
#4	2'-0"	1'-9"
#5	2'-6"	2'-2"
#6	3'-10"	2'-7"

PROJECT NO. 17BP.7.R.71

ALAMANCE COUNTY

STATION: 15+44.00 -L-

STATE OF NORTH CAROLINA
DEPARTMENT OF TRANSPORTATION
RALEIGH

STANDARD
BRIDGE APPROACH SLAB
FOR PRESTRESSED CONCRETE
BOX BEAM UNIT
(SUB-REGIONAL TIER)
75° SKEW

NORTH CAROLINA PROFESSIONAL SEAL 14855 ENGINEER DOUGLAS R. CALLOUN
Douglas R. Calloun
4/23/2015

REVISIONS								SHEET NO.
NO.	BY:	DATE:	NO.	BY:	DATE:			S-15
1			3					TOTAL SHEETS
2			4					15

ASSEMBLED BY :	A. SORSENGINH	DATE :	5/2014
CHECKED BY :	W.F. PARKER	DATE :	6/2014
DRAWN BY : MAA	11/11		
CHECKED BY : AAC	11/11		

18-NOV-2014 12:27
S:\DPG2\Doug\DivisionProjects\17BP\17BP_7_R_71\Plans\Miscellaneous\17BP7R71_SD_AS.dgn
toverette

STD. NO. BAS_BB_33_75S

STANDARD NOTES

DESIGN DATA:

SPECIFICATIONS	A.A.S.H.T.O. (CURRENT)
LIVE LOAD	SEE PLANS
IMPACT ALLOWANCE	SEE A.A.S.H.T.O.
STRESS IN EXTREME FIBER OF	
STRUCTURAL STEEL - AASHTO M270 GRADE 36	20,000 LBS. PER SQ. IN.
- AASHTO M270 GRADE 50W	27,000 LBS. PER SQ. IN.
- AASHTO M270 GRADE 50	27,000 LBS. PER SQ. IN.
REINFORCING STEEL IN TENSION	
GRADE 60	24,000 LBS. PER SQ. IN.
CONCRETE IN COMPRESSION	1,200 LBS. PER SQ. IN.
CONCRETE IN SHEAR	SEE A.A.S.H.T.O.
STRUCTURAL TIMBER - TREATED OR	
UNTREATED - EXTREME FIBER STRESS	1,800 LBS. PER SQ. IN.
COMPRESSION PERPENDICULAR TO GRAIN OF TIMBER	375 LBS. PER SQ. IN.
EQUIVALENT FLUID PRESSURE OF EARTH	30 LBS. PER CU. FT. (MINIMUM)

MATERIAL AND WORKMANSHIP:

EXCEPT AS MAY OTHERWISE BE SPECIFIED ON PLANS OR IN THE SPECIAL PROVISIONS, ALL MATERIAL AND WORKMANSHIP SHALL BE IN ACCORDANCE WITH THE 2012 "STANDARD SPECIFICATIONS FOR ROADS AND STRUCTURES" OF THE N.C. DEPARTMENT OF TRANSPORTATION.

STEEL SHEET PILING FOR PERMANENT OR TEMPORARY APPLICATIONS SHALL BE HOT ROLLED.

CONCRETE:

UNLESS OTHERWISE REQUIRED ON PLANS, CLASS A CONCRETE SHALL BE USED FOR ALL PORTIONS OF ALL STRUCTURES WITH THE EXCEPTION THAT: CLASS AA CONCRETE SHALL BE USED IN BRIDGE SUPERSTRUCTURES, ABUTMENT BACKWALLS, AND APPROACH SLABS; AND CLASS B CONCRETE SHALL BE USED FOR SLOPE PROTECTION AND RIP RAP.

CONCRETE CHAMFERS:

UNLESS OTHERWISE NOTED ON THE PLANS, ALL EXPOSED CORNERS ON STRUCTURES SHALL BE CHAMFERED 3/4" WITH THE FOLLOWING EXCEPTIONS: TOP CORNERS OF CURBS MAY BE ROUNDED TO 1-1/2" RADIUS WHICH IS BUILT INTO CURB FORMS; CORNERS OF TRANSVERSE FLOOR EXPANSION JOINTS SHALL BE ROUNDED WITH A 1/4" FINISHING TOOL UNLESS OTHERWISE REQUIRED ON PLANS; AND CORNERS OF EXPANSION JOINTS IN THE ROADWAY FACES AND TOPS OF CURBS AND SIDEWALKS SHALL BE ROUNDED TO A 1/4" RADIUS WITH A FINISHING STONE OR TOOL UNLESS OTHERWISE REQUIRED ON PLANS.

DOWELS:

DOWELS WHEN INDICATED ON PLANS AS FOR CULVERT EXTENSIONS, SHALL BE EMBEDDED AT LEAST 12" INTO THE OLD CONCRETE AND GROUTED INTO PLACE WITH 1:2 CEMENT MORTAR.

ALLOWANCE FOR DEAD LOAD DEFLECTION, SETTLEMENT, ETC. IN CASTING SUPERSTRUCTURES:

BRIDGES SHALL BE BUILT ON THE GRADE OR VERTICAL CURVE SHOWN ON PLANS. SLABS, CURBS AND PARAPETS SHALL CONFORM TO THE GRADE OR CURVE.

ALL DIMENSIONS WHICH ARE GIVEN IN SECTION AND ARE AFFECTED BY DEAD LOAD DEFLECTIONS ARE DIMENSIONS AT CENTER LINE OF BEARING UNLESS OTHERWISE NOTED ON PLANS. IN SETTING FORMS FOR STEEL BEAM BRIDGES AND PRESTRESSED CONCRETE GIRDER BRIDGES, ADJUSTMENTS SHALL BE MADE DUE TO THE DEAD LOAD DEFLECTIONS FOR THE ELEVATIONS SHOWN. WHERE BLOCKS ARE SHOWN OVER BEAMS FOR BUILDING UP TO THE SLAB, THE VERTICAL DIMENSIONS OF THE BLOCKS SHALL BE ADJUSTED BETWEEN BEARINGS TO COMPENSATE FOR DEAD LOAD DEFLECTIONS, VERTICAL CURVE ORDINATE, AND ACTUAL BEAM CAMBER. WHERE BOTTOM OF SLAB IS IN LINE WITH BOTTOM OF TOP FLANGES, DEPTH OF SLAB BETWEEN BEARINGS SHALL BE ADJUSTED TO COMPENSATE FOR DEAD LOAD DEFLECTION, VERTICAL CURVE ORDINATE, AND ACTUAL BEAM CAMBER.

IN SETTING FALSEWORK AND FORMS FOR REINFORCED CONCRETE SPANS, AN ALLOWANCE SHALL BE MADE FOR DEAD LOAD DEFLECTIONS, SETTLEMENT OF FALSEWORK, AND PERMANENT CAMBER WHICH SHALL BE PROVIDED FOR IN ADDITION TO THE ELEVATIONS SHOWN. AFTER REMOVAL OF THE FALSEWORK, THE FINISHED STRUCTURES SHALL CONFORM TO THE PROFILE AND ELEVATIONS SHOWN ON THE PLANS AND CONSTRUCTION ELEVATIONS FURNISHED BY THE ENGINEER.

DETAILED DRAWINGS FOR FALSEWORK OR FORMS FOR BRIDGE SUPERSTRUCTURE AND ANY STRUCTURE OR PARTS OF A STRUCTURE AS NOTED ON THE PLANS SHALL BE SUBMITTED TO THE ENGINEER FOR APPROVAL BEFORE CONSTRUCTION OF THE FALSEWORK OR FORMS IS STARTED.

REINFORCING STEEL:

ALL REINFORCING STEEL SHALL BE DEFORMED. DIMENSIONS RELATIVE TO PLACEMENT OF REINFORCING ARE TO CENTERS OF BARS UNLESS OTHERWISE INDICATED IN THE PLANS. DIMENSIONS ON BAR DETAILS ARE TO CENTERS OF BARS OR ARE OUT TO OUT AS INDICATED ON PLANS.

WIRE BAR SUPPORTS SHALL BE PROVIDED FOR REINFORCING STEEL WHERE INDICATED ON THE PLANS. WHEN BAR SUPPORT PIECES ARE PLACED IN CONTINUOUS LINES, THEY SHALL BE SO PLACED THAT THE ENDS OF THE SUPPORTING WIRES SHALL BE LAPPED TO LOCK LEGS ON ADJOINING PIECES.

STRUCTURAL STEEL:

AT THE CONTRACTOR'S OPTION, HE MAY SUBSTITUTE 7/8" Ø SHEAR STUDS FOR THE ¾" Ø STUDS SPECIFIED ON THE PLANS. THIS SUBSTITUTION SHALL BE MADE AT THE RATE OF 3 - 7/8" Ø STUDS FOR 4 - 3/4" Ø STUDS, AND STUD SPACING CHANGES SHALL BE MADE AS NECESSARY TO PROVIDE THE SAME EQUIVALENT NUMBER OF 7/8" Ø STUDS ALONG THE BEAM AS SHOWN FOR 3/4" Ø STUDS BASED ON THE RATIO OF 3 - 7/8" Ø STUDS FOR 4 - 3/4" Ø STUDS. STUDS OF THE LENGTH SPECIFIED ON THE PLANS MUST BE PROVIDED. THE MAXIMUM SPACING SHALL BE 2'-0".

EXCEPT AT THE INTERIOR SUPPORTS OF CONTINUOUS BEAMS WHERE THE COVER PLATE IS IN CONTACT WITH BEARING PLATE, THE CONTRACTOR MAY, AT HIS OPTION, SUBSTITUTE FOR THE COVER PLATES DESIGNATED ON THE PLANS COVER PLATES OF THE EQUIVALENT AREA PROVIDED THESE PLATES ARE AT LEAST 5/16" IN THICKNESS AND DO NOT EXCEED A WIDTH EQUAL TO THE FLANGE WIDTH LESS 2" OR A THICKNESS EQUAL TO 2 TIMES THE FLANGE THICKNESS. THE SIZE OF FILLET WELDS SHALL CONFORM TO THE REQUIREMENTS OF THE CURRENT ANSI/AASHTO/AWS "BRIDGE WELDING CODE". ELECTROSLAG WELDING WILL NOT BE PERMITTED.

WITH THE SOLE EXCEPTION OF EDGES AT SURFACES WHICH BEAR ON OTHER SURFACES, ALL SHARP EDGES AND ENDS OF SHAPES AND PLATES SHALL BE SLIGHTLY ROUNDED BY SUITABLE MEANS TO A RADIUS OF APPROXIMATELY 1/16 INCH OR EQUIVALENT FLAT SURFACE AT A SUITABLE ANGLE PRIOR TO PAINTING, GALVANIZING, OR METALLIZING.

HANDRAILS AND POSTS:

METAL STANDARDS AND FACES OF THE CONCRETE END POSTS FOR THE METAL RAIL SHALL BE SET NORMAL TO THE GRADE OF THE CURB, UNLESS OTHERWISE SHOWN ON PLANS. THE METAL RAIL AND TOPS OF CONCRETE POSTS USED WITH THE ALUMINUM RAIL SHALL BE BUILT PARALLEL TO THE GRADE OF THE CURB.

METAL HANDRAILS SHALL BE IN ACCORDANCE WITH THE PLANS. RAILS SHALL BE AS MANUFACTURED FOR BRIDGE RAILING. CASTINGS SHALL BE OF A UNIFORM APPEARANCE. FINS AND OTHER DEFORMATIONS RESULTING FROM CASTING OR OTHERWISE SHALL BE REMOVED IN A MANNER SO THAT A UNIFORM COLORING OF THE COMPLETED CASTING SHALL BE OBTAINED. CASTINGS WITH DISCOLORATIONS OR OF NON-UNIFORM COLORING WILL NOT BE ACCEPTED. CERTIFIED MILL REPORTS ARE REQUIRED FOR METAL RAILS AND POSTS.

SPECIAL NOTES:

GENERALLY, IN CASE OF DISCREPANCY, THIS STANDARD SHEET OF NOTES SHALL GOVERN OVER THE SPECIFICATIONS, BUT THE REMAINDER OF THE PLANS SHALL GOVERN OVER NOTES HEREON, AND SPECIAL PROVISIONS SHALL GOVERN OVER ALL. SEE SPECIFICATIONS ARTICLE 105-4.

ENGLISH

JANUARY, 1990