NORTH CAROLINA DEPARTMENT OF TRANSPORTATION
DIVISION 7 SUPPORT FACILITY

ALAMANCE COUNTY (GRAHAM, NORTH CAROLINA)
SCO # 13-10060-01A

PROJECT TEAM

OWNER
Priscilla Tyree Williams, PE
Director, Facilities Management Division, NCDOT
1525 Mail Service Center
Raleigh, NC 27699-1525
p 919.707.4540

CIVIL ENGINEER
Mattern & Craig
Scott Homewood, PE, CFM
12 Broad Street
Asheville, NC 28801
p 828.254.2201

adwarchitects
environmentsforlife
architecture planning interiors
Robert Cosimo Woodruff, AIA, CDT
101 West Worthington Avenue, Suite 270
Charlotte, NC 28203
p 704.379.1919 f 704.379.1920

STRUCTURAL ENGINEER
Stewart, Inc.
Lance Williams, PE
200 South College Street, Suite 720
Charlotte, NC 28202
p 704.334.7925 f 704.334.7926

MEP ENGINEER
Brittain Engineering, Inc.
Donald R. Brittain, PE
56 3rd Street NW
Hickory, NC 28601
p 828.328.1813

DRAWING SYMBOLS

DRAWING TITLE

ELEVATION MARK — 1 A200

SECTION MARK

DETAIL MARK — DETAIL NUMBER / SHEET NUMBER

COLUMN GRID REFERENCE

ROOM NAME / NUMBER

REVISION MARK

WALL TYPE

DOOR TYPE

WINDOW TYPE — 1i

ELEVATION

MATCH LINE

FINISH MARK

VICINITY MAP

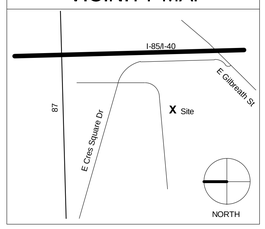

ISSUE DATES

11/10/14 - DESIGN DEVELOPMENT SUBMITTAL

02/10/15 - 75% CONSTRUCTION DOCUMENT PRICING

03/10/15 - 100% CONSTRUCTION DOCUMENT SUBMITTAL

05/08/15 - SCO COMMENT REVISIONS

RENDERING

SHEET INDEX

SHEET NO.	SHEET TITLE	ISSUED	REVISION
GENERAL			
A001	CODE INFORMATION - APPENDIX B	No	
A002	LIFE SAFETY PLAN	No	A
A004	WALL TYPES	No	A
CIVIL			
1	SURVEY - FOR REFERENCE ONLY	No	
2	SURVEY - FOR REFERENCE ONLY	No	
C100	LEGEND & GENERAL NOTES	No	
C101	EXISTING CONDITIONS PLAN	No	
C102	DEMOLITION PLAN	No	
C103	INITIAL GRADING PLAN & EROSION CONTROL PLAN	No	
C104	UTILITY PLAN	No	
C105	SITE PLAN	No	
C106	FINE GRADING, DRAINAGE, & STORMWATER MANAGEMENT PLAN	No	
C201	EROSION CONTROL DETAILS	No	
C202	UTILITY DETAILS	No	
C203	SITE DETAILS	No	
ARCHITECTURAL			
A101	FIRST FLOOR PLAN	No	A
A110	ROOF PLAN	No	
A200	EXTERIOR ELEVATIONS	No	A
A201	ELEVATION DETAILS	No	A
A300	BUILDING SECTIONS	No	A
A400	WALL SECTIONS & DETAILS @ STORAGE	No	A
A401	WALL SECTIONS & DETAILS @ OFFICE	No	A
A500	ENLARGED RESTROOM PLANS & ELEVATIONS	No	A
A501	ENLARGED STAIR PLANS & DETAILS	No	A
A502	PLAN DETAILS	No	
A600	DOOR SCHEDULE, ELEVATIONS & DETAILS	No	A
A601	WINDOW & STOREFRONT ELEVATIONS & DETAILS	No	A
A700	FINISH SCHEDULE, LEGEND & PLANS	No	
A800	FIRST FLOOR REFLECTED CEILING PLAN AND DETAILS	No	A
A900	CASEWORK DETAILS	No	A
STRUCTURAL			
S001	GENERAL NOTES & ABBREVIATIONS	No	
S100	FOUNDATION PLAN	No	
S200	ROOF PLAN	No	
S300	TYPICAL FOUNDATION DETAILS	No	
S301	FOUNDATION DETAILS	No	
S302	TYPICAL MASONRY DETAILS	No	
S303	TYPICAL MASONRY DETAILS	No	
S401	TYPICAL ROOF & FRAMING DETAILS	No	
S402	TYPICAL METAL STUD DETAILS	No	
S403	TYPICAL METAL STUD DETAILS	No	
PLUMBING			
P1	FLOOR PLAN PLUMBING	No	
P2	FIXTURE SCHEDULE & DETAILS	No	
MECHANICAL			
M1	FLOOR PLAN HVAC	No	
M2	DETAILS HVAC	No	
ELECTRICAL			
E1	FLOOR PLAN ELECTRICAL	No	
E2	FLOOR PLAN ELECTRICAL	No	
E3	FLOOR PLAN FIRE ALARM & HVAC POWER	No	
E4	SCHEDULES	No	

ABBREVIATIONS

AFF	ABOVE FINISH FLOOR	FEC	FIRE EXTINGUISHER CABINET	PA	PUBLIC ADDRESS
APPROX	APPROXIMATE	FED	FEDERAL	PL	PLATE
ARCH	ARCHITECTURAL	FFJ	FORMED FLOOR JOINT	PREFAB	PREFABRICATED
AUTO	AUTOMATIC	FJ	FLOOR JOINT	PRELIM	PRELIMINARY
AUX	AUXILIARY	FIG	FIGURE	PROJ	PROJECT
AVG	AVERAGE	FIN	FINISH	PSF	POUNDS PER SQUARE FOOT
BD	BOARD	FIN FLR	FINISH FLOOR	PSI	POUNDS PER SQAURE INCH
BLDG	BUILDING	FIN GRD	FINISH GRADE	PT	POINT
BOT	BOTTOM	FLR	FLOOR	R (RAD)	RADIUS
BRG	BEARING	FPM	FEET PER MINUTE	RA	RETURN AIR
BTU	BRITISH THERMAL UNITS	FPS	FEET PER SECOND	RD	ROOF DRAIN
C	CELSIUS	FT	FEET	REFRIG	REFRIGERATOR
CB	CATCH BASIN	GA	GAUGE	REINF	REINFORCE
CJ	CONTROL JOINT	GAL	GALLON	REQD	REQUIRED
CLG	CEILING	GALV	GALVANIZE(D)	RH	RIGHT HAND
CLR	CLEAR	GEN	GENERAL	RHR	RIGHT HAND REVERSE
CMU	CONCRETE MASONRY UNIT	GPH	GALLONS PER HOUR	SD	STORM DRAIN
CO2	CARBON DIOXIDE	GPM	GALLONS PER MINUTE	SHT	SHEET
COL	COLUMN	GOVT	GOVERNMENT	SIM	SIMILAR
CONC	CONCRETE	GWB	GYPSUM WALL BOARD	SPEC	SPECIFICATION
CONST	CONSTRUCTION	GYP	GYPSUM	SQ	SQUARE
CST	CONCRETE STAIN	GYP BD	GYPSUM BOARD	SQ FT	SQUARE FOOT
CTR	CENTER	HDW	HARDWARE	SQ IN	SQUARE INCH
CL	CENTERLINE	HGT	HEIGHT	ST	STREET
CL TO CL	CENTERLINE TO CENTERLINE	HORIZ	HORIZONTAL	STD	STANDARD
CU FT	CUBIC FEET	HVAC	HEATING, VENTILATION, A/C	STL	STEEL
HR	HOUR	IN	INCH	STRUCT	STRUCTURAL
CU IN	CUBIC INCH	INFO	INFORMATION	SYM	SYMBOL
CU YD	CUBIC YARD	INSUL	INSULATION	T&G	TONGUE & GROOVE
DBL	DOUBLE	INV	INVERT	TEL	TELEPHONE
DEPT	DEPARTMENT	JT	JOINT	TV	TELEVISION
DF	DRINKING FOUNTAIN	LAB	LABORATORY	TYP	TYPICAL
DIA	DIAMETER	LB	POUND	VCT	VINYL COMPOSITION TILE
DIM	DIMENSION	LH	LEFT HAND	VERT	VERTICAL
DS	DOWN SPOUT	LHR	LEFT HAND REVERSE	VOC	VOLATILE ORGANIC COMPOUND
DWG	DRAWING	LL	LIVE LOAD	VOL	VOLUME
EA	EACH	MAINT	MAINTENANCE	WC	WATER CLOSET
ED	EQUIPMENT DRAIN	MAX	MAXIMUM	UNO	UNLESS OTHERWISE NOTED
EEJ	EXTERIOR EXPANSION JOINT	MECH	MECHANICAL		
EF	EXHAUST FAN	MEMO	MEMORANDUM		
EL	ELEVATION	MEZZ	MEZZANINE		
ELEC	ELECTRICAL	MFG	MANUFACTURE(R)		
ELEM	ELEMENTAIRY	MH	MANHOLE		
ELEV	ELEVATOR	MIN	MINIMUM		
ENGR	ENGINEER	MISC	MISCELLANEOUS		
EQ	EQUAL	MO	MASONRY OPENING		
EQUIP	EQUIPMENT	MTL	METAL		
EWC	ELECTRIC WATER COOLER	NA	NOT APPLICABLE		
EXH	EXHAUST	NEG	NEGATIVE		
EXIST	EXISTING	NIC	NOT IN CONTRACT		
EXP	EXPANSION	NO	NUMBER		
EXP JT	EXPANSION JOINT	NTS	NOT TO SCALE		
F	FAHRENHEIT	OC	ON CENTER		
FAB	FABRICATE	OD	OUTSIDE DIAMETER		
FD	FLOOR DRAIN	OH	OPPOSITE HAND		
FE	FIRE EXTINGUISHER	OPP	OPPOSITE		

JAMES GILMORE POWELL
REGISTERED ARCHITECT
5454
NORTH CAROLINA
CHARLOTTE, N.C.
05.26.15

2012 APPENDIX B
BUILDING CODE SUMMARY
FOR ALL COMMERCIAL PROJECTS
(EXCEPT 1 AND 2-FAMILY DWELLINGS AND TOWNHOUSES)
(Reproduce the following data on the building plans sheet 1 or 2)

Name of Project: NCDOT DIVISION #7 SUPPORT FACILITY
Address: 333 PRISON CAMP ROAD Zip Code 27253
Proposed Use: BUSINESS/STORAGE
Owner/Authorized Agent: NCDOT FACILITIES MGMT Phone # (919) 707 - 4540 E-Mail ptwilliams1@ncdot.gov
Owned By: ☐ City/County ☐ Private ☒ State
Code Enforcement Jurisdiction: ☐ City_____ ☐ County_____ ☒ State

LEAD DESIGN PROFESSIONAL: James G. Powell, Architect

DESIGNER	FIRM	NAME	LICENSE #	TELEPHONE #	E-MAIL
Architectural	ADW Architects, PA	James G. Powell	5454	(704)379-1919	jpowell@adwarchitects.com
Civil	Mattern & Craig	Scott Homewood	036336	(828)254-2201	mshomewood@mattemandcraig.com
Electrical	Brittain Engineering	Donald Brittain	07883	(828)328-1823	dbrittain@brittainengineering.com
Fire Alarm	Brittain Engineering	Donald Brittain	07883	(828)328-1823	dbrittain@brittainengineering.com
Plumbing	Brittain Engineering	Donald Brittain	07883	(828)328-1823	dbrittain@brittainengineering.com
Mechanical	Brittain Engineering	Donald Brittain	07883	(828)328-1823	dbrittain@brittainengineering.com
Sprinkler-Standpipe				( )	
Structural	Stewart Engineering, Inc.	Lance D Williams	26465	(704)334-7925	lwilliams@stewartinc.com
Retaining Walls >5' High				( )	
Other				( )	

2012 EDITION OF NC CODE FOR: ☒ New Construction ☐ Addition ☐ Upfit
EXISTING: ☐ Reconstruction ☐ Alteration ☐ Repair ☐ Renovation
CONSTRUCTED: (date) _____ **ORIGINAL USE(S)** (Ch. 3): _____
RENOVATED: (date) _____ **CURRENT USE(S)** (Ch. 3): _____
PROPOSED USE(S) (Ch. 3): _____

BASIC BUILDING DATA
Construction Type: (check all that apply) ☐ I-A ☐ I-B ☐ II-A ☐ II-B ☐ III-A ☐ III-B ☐ IV ☒ V-A ☒ V-B
Sprinklers: ☒ No ☐ Partial ☐ Yes ☐ NFPA 13 ☐ NFPA 13R ☐ NFPA 13D
Standpipes: ☒ No ☐ Yes Class ☐ I ☐ II ☐ III ☐ Wet ☐ Dry
Fire District: ☒ No ☐ Yes (Primary) **Flood Hazard Area:** ☒ No ☐ Yes
Building Height: (feet) 30'-6"
Gross Building Area:

FLOOR	EXISTING (SQ FT)	NEW (SQ FT)	RENO/ALTER (SQ.FT)	SUB-TOTAL
6th Floor				
5th Floor				
4th Floor				
3rd Floor				
2nd Floor				
Mezzanine				
1st Floor		10,300 sf		
Basement				
TOTAL		10,300 sf		

ALLOWABLE AREA

Occupancy:
Assembly ☐ A-1 ☐ A-2 ☐ A-3 ☐ A-4 ☐ A-5
Business ☒
Educational ☐
Factory ☐ F-1 Moderate ☐ F-2 Low
Hazardous ☐ H-1 Detonate ☐ H-2 Deflagrate ☐ H-3 Combust ☐ H-4 Health ☐ H-5 HPM
Institutional ☐ I-1 ☐ I-2 ☐ I-3 ☐ I-4
I-3 Condition ☐ 1 ☐ 2 ☐ 3 ☐ 4 ☐ 5
Mercantile ☐
Residential ☐ R-1 ☐ R-2 ☐ R-3 ☐ R-4
Storage ☐ S-1 Moderate ☒ S-2 Low ☐ High-piled
☐ Parking Garage ☐ Open ☐ Enclosed ☐ Repair Garage
Utility and Miscellaneous ☐

Accessory Occupancies:
Assembly ☐ A-1 ☐ A-2 ☐ A-3 ☐ A-4 ☐ A-5
Business ☐
Educational ☐
Factory ☐ F-1 Moderate ☐ F-2 Low
Hazardous ☐ H-1 Detonate ☐ H-2 Deflagrate ☐ H-3 Combust ☐ H-4 Health ☐ H-5 HPM
Institutional ☐ I-1 ☐ I-2 ☐ I-3 ☐ I-4
I-3 Condition ☐ 1 ☐ 2 ☐ 3 ☐ 4 ☐ 5
Mercantile ☐
Residential ☐ R-1 ☐ R-2 ☐ R-3 ☐ R-4
Storage ☐ S-1 Moderate ☐ S-2 Low ☐ High-piled
☐ Parking Garage ☐ Open ☐ Enclosed ☐ Repair Garage
Utility and Miscellaneous ☐

Incidental Uses (Table 508.2.5):
☐ Furnace room where any piece of equipment is over 400,000 Btu per hour input
☐ Rooms with boilers where the largest piece of equipment is over 15 psi and 10 horsepower
☐ Refrigerant machine room
☐ Hydrogen cutoff rooms, not classified as Group H
☐ Incinerator rooms
☐ Paint shops, not classified as Group H, located in occupancies other than Group F
☐ Laboratories and vocational shops, not classified as Group H. located in a Group E or I-2 occupancy
☐ Laundry rooms over 100 square feet
☐ Group I-3 cells equipped with padded surfaces
☐ Group I-2 waste and linen collection rooms
☐ Waste and linen collection rooms over 100 square feet
☐ Stationary storage battery systems having a liquid electrolyte capacity of more than 50 gallons, or a lithium-ion capacity of 1,000 pounds used for facility standby power, emergency power or uninterrupted power supplies
☐ Rooms containing fire pumps
☐ Group I-2 storage rooms over 100 square feet
☐ Group I-2 commercial kitchens
☐ Group I-2 laundries equal to or less than 100 square feet
☐ Group I-2 rooms or spaces that contain fuel-fired heating equipment

Special Uses: ☐ 402 ☐ 403 ☐ 404 ☐ 405 ☐ 406 ☐ 407 ☐ 408 ☐ 409 ☐ 410 ☐ 411 ☐ 412 ☐ 413 ☐ 414 ☐ 415 ☐ 416 ☐ 417 ☐ 418 ☐ 419 ☐ 420 ☐ 421 ☐ 422 ☐ 423 ☐ 424 ☐ 425 ☐ 426 ☐ 427

Special Provisions: ☐ 509.2 ☐ 509.3 ☐ 509.4 ☐ 509.5 ☐ 509.6 ☐ 509.7 ☐ 509.8 ☐ 509.9
Mixed Occupancy: ☐ No ☒ Yes Separation: 0 Hr. Exception: 508.3
☐ Incidental Use Separation (508.2.5)

This separation is not exempt as a Non-Separated Use (see exceptions).
☒ Non-Separated Use (508.3)
The required type of construction for the building shall be determined by applying the height and area limitations for each of the applicable occupancies to the entire building. The most restrictive type of construction, so determined, shall apply to the entire building.
☐ Separated Use (508.4) - See below for area calculations
For each story, the area of the occupancy shall be such that the sum of the ratios of the actual floor area of each use divided by the allowable floor area for each use shall not exceed 1.

$$\frac{\text{Actual Area of Occupancy A}}{\text{Allowable Area of Occupancy A}} + \frac{\text{Actual Area of Occupancy B}}{\text{Allowable Area of Occupancy B}} \leq 1$$

$$\_\_\_\_ + \_\_\_\_ + \ldots = \_\_\_\_ \leq 1.00$$

STORY NO.	DESCRIPTION AND USE	(A) BLDG AREA PER STORY (ACTUAL)	(B) TABLE 503[5] AREA	(C) AREA FOR FRONTAGE INCREASE[1]	(D) AREA FOR SPRINKLER INCREASE[2]	(E) ALLOWABLE AREA OR UNLIMITED[3]	(F) MAXIMUM BUILDING AREA[4]
1ST	BUSINESS	10300 SF	9000 SF	6750 SF	N/A	15750 SF	15,750 SF

[1] Frontage area increases from Section 506.2 are computed thus:
a. Perimeter which fronts a public way or open space having 20 feet minimum width = 462 ft (F)
b. Total Building Perimeter = 462 ft (P)
c. Ratio (F/P) = 1.0 (F/P)
d. W = Minimum width of public way = 30 ft (W)
e. Percent of frontage increase $I_f = 100\ [F/P - 0.25] \times W/30$ = 75 (%)
[2] The sprinkler increase per Section 506.3 is as follows:
a. Multi-story building I_a = 200 percent
b. Single story building I_a = 300 percent
[3] Unlimited area applicable under conditions of Section 507.
[4] Maximum Building Area = total number of stories in the building x E (506.4).
[5] The maximum area of open parking garages must comply with Table 406.3.5. The maximum area of air traffic control towers must comply with Table 412.1.2.

ALLOWABLE HEIGHT

	ALLOWABLE (Table 503)	INCREASE FOR SPRINKLERS	SHOWN ON PLANS	CODE REFERENCE
Type of Construction	Type VB		Type VB	
Building Height in Feet	40'	Feet = H + 20'/= N/A	28'-0"	
Building Height in Stories	1	Stories + 1 = N/A	1	

FIRE PROTECTION REQUIREMENTS

BUILDING ELEMENT	FIRE SEPARATION DISTANCE (FEET)	RATING REQ'D	RATING PROVIDED (W/_____* REDUCTION)	DETAIL # AND SHEET #	DESIGN # FOR RATED ASSEMBLY	DESIGN # FOR RATED PENETRATION	DESIGN # FOR RATED JOINTS
Structural Frame, including columns, girders, trusses							
Bearing Walls							
Exterior		0	0				
North							
East							
West							
South							
Interior							
Nonbearing Walls and Partitions Exterior walls		0	0				
North							
East							
West							
South							
Interior walls and partitions		0	0				
Floor Construction Including supporting beams and joists		0	0				
Roof Construction Including supporting beams and joists		0	0				
Shaft Enclosures - Exit		N/A					
Shaft Enclosures - Other		N/A					
Corridor Separation		0	0				
Occupancy Separation		0	0				
Party/Fire Wall Separation		N/A					
Smoke Barrier Separation		N/A					
Tenant Separation		N/A					
Incidental Use Separation		N/A					

* Indicate section number permitting reduction

LIFE SAFETY SYSTEM REQUIREMENTS

Emergency Lighting: ☐ No ☒ Yes
Exit Signs: ☐ No ☒ Yes
Fire Alarm: ☒ No ☐ Yes
Smoke Detection Systems: ☒ No ☐ Yes ☐ Partial _____
Panic Hardware: ☒ No ☐ Yes

LIFE SAFETY PLAN REQUIREMENTS

Life Safety Plan Sheet #: A002
☐ Fire and/or smoke rated wall locations (Chapter 7)
☐ Assumed and real property line locations
☐ Exterior wall opening area with respect to distance to assumed property lines (705.8)

☐ Existing structures within 30' of the proposed building
☒ Occupancy types for each area as it relates to occupant load calculation (Table 1004.1.1)
☒ Occupant loads for each area
☒ Exit access travel distances (1016)
☒ Common path of travel distances (1014.3 & 1028.8)
☒ Dead end lengths (1018.4)
☒ Clear exit widths for each exit door
☒ Maximum calculated occupant load capacity each exit door can accommodate based on egress width (1005.1)
☒ Actual occupant load for each exit door
☐ A separate reduced scaled plan indicating where fire rated floor/ceiling and/or roof structure is provided for purposes of occupancy separation and supporting construction for a fire barrier/fire partition/smoke barrier. (707.5.1, 709.4 &710.4).
☐ Location of doors with panic hardware (1008.1.10)
☐ Location of doors with delayed egress locks and the amount of delay (1008.1.9.7)
☐ Location of doors with electromagnetic egress locks (1008.1.9.8)
☐ Location of doors equipped with hold-open devices
☐ Location of emergency escape windows (1029)
☐ The square footage of each fire area (902)
☐ The square footage of each smoke compartment (407.4)
☐ Note any code exceptions or table notes that may have been utilized regarding the items above

Section/Table/Note	Title
1008.1.10	Panic & Fire Exit Hardware (Less than 50 occupants)

ACCESSIBLE DWELLING UNITS
(SECTION 1107)

TOTAL UNITS	ACCESSIBLE UNITS REQUIRED	ACCESSIBLE UNITS PROVIDED	TYPE A UNITS REQUIRED	TYPE A UNITS PROVIDED	TYPE B UNITS REQUIRED	TYPE B UNITS PROVIDED	TOTAL ACCESSIBLE UNITS PROVIDED

ACCESSIBLE PARKING
(SECTION 1106)

LOT OR PARKING AREA	TOTAL # OF PARKING SPACES REQUIRED	TOTAL # OF PARKING SPACES PROVIDED	# OF ACCESSIBLE SPACES PROVIDED: REGULAR WITH 5' ACCESS AISLE	VAN SPACES WITH 132" ACCESS AISLE	VAN SPACES WITH 8' ACCESS AISLE	TOTAL # ACCESSIBLE SPACES PROVIDED
EXIST. BLDG	45	45			2	2
PROP. BLDG	40	46	1		1	2
TOTAL 85	85	91	1		3	4

STRUCTURAL DESIGN

DESIGN LOADS: SEE STRUCTURAL SHEET S001 FOR BALANCE OF INFORMATION.

Importance Factors: Wind (I_W) 1.0 Snow (I_S) 1.0 Seismic (I_E) 1.0

Live Loads: Roof 20 psf Mezzanine N/A psf Floor N/A psf

Ground Snow Load: 15 psf

Wind Load: Basic Wind Speed 90 mph (ASCE-7) Exposure Category C Wind Base Shears (for MWFRS) Vx = 11.4k Vy = 27k

SEISMIC DESIGN CATEGORY: ☐ A ☐ B ☐ C ☐ D
Provide the following Seismic Design Parameters:
Occupancy Category (Table 1604.5) ☐ I ☐ II ☐ III ☐ IV
Spectral Response Acceleration S_S %g S_1 %g
Site Classification (Table 1613.5.2) ☐ A ☐ B ☐ C ☐ D ☐ E ☐ F
Data Source: ☐ Field Test ☐ Presumptive ☐ Historical Data
Basic structural system (check one)
☐ Bearing Wall ☐ Dual w/Special Moment Frame
☐ Building Frame ☐ Dual w/Intermediate R/C or Special Steel
☐ Moment Frame ☐ Inverted Pendulum
Seismic base shear: V_X = V_Y =
Analysis Procedure: ☐ Simplified ☐ Equivalent Lateral Force ☐ Dynamic
Architectural, Mechanical, Components anchored? ☐ Yes ☐ No

LATERAL DESIGN CONTROL: Earthquake ☐ Wind ☐

SOIL BEARING CAPACITIES:
Field Test (provide copy of test report) _____ psf
Presumptive Bearing capacity _____ psf
Pile size, type, and capacity _____

SPECIAL INSPECTIONS REQUIRED: ☐ Yes ☒ No

PLUMBING FIXTURE REQUIREMENTS
(TABLE 2902.1)

BUSINESS

USE		WATERCLOSETS MALE	WATERCLOSETS FEMALE	URINALS	LAVATORIES MALE	LAVATORIES FEMALE	SHOWERS/ TUBS	DRINKING FOUNTAINS REGULAR	DRINKING FOUNTAINS ACCESSIBLE
SPACE	EXISTING								
	NEW	1	2	2	2	2	1 M, 1 F	1	1
	REQUIRED	2	2		1	1			1

SPECIAL APPROVALS

Special approval: (Local Jurisdiction, Department of Insurance, SCO, DPI, DHHS, ICC, etc., describe below)
SCO

ENERGY SUMMARY

ENERGY REQUIREMENTS:
The following data shall be considered minimum and any special attribute required to meet the **North Carolina Energy Conservation Code** shall also be provided. Each Designer shall furnish the required portions of the project information for the plan data sheet. If performance method, state the annual energy cost for the standard reference design vs annual energy cost for the proposed design.

Climate Zone: ☐ 3 ☒ 4 ☐ 5

Method of Compliance:
☒ Prescriptive (Energy Code)
☐ Performance (Energy Code)
☐ Prescriptive (ASHRAE 90.1)
☐ Performance (ASHRAE 90.1)

THERMAL ENVELOPE

Roof/ceiling Assembly (each assembly)
Description of assembly: Pitched roof w/ 30 year architectural asphalt shingles on 30# roofing felt, OSB sheathing on 1x purlins, wood trusses in enclosed & vented attic space w/ 12" blown-in insulation.
U-Value of total assembly: U-0.024
R-Value of insulation: R-42
Skylights in each assembly: N/A
U-Value of skylight: N/A
Total square footage of skylights in each assembly: N/A

Exterior Walls (each assembly)
Description of assembly: Brick veneer with 2" airspace and 1 1/2" rigid insulation over weather barrier and 5/8" exterior sheathing. Metal stud framed walls w/ R-13 batt insulation in cavity and 5/8" gyp interior finish.
U-Value of total assembly: U-0.041
R-Value of insulation: R-24
Openings (windows or doors with glazing)
U-Value of assembly: U-0.29
Solar heat gain coefficient: 0.27
Projection factor: 0.25
Door R-Values: R-3.7

Walls below grade (each assembly)
Description of assembly: N/A
U-Value of total assembly: _____
R-Value of insulation: _____

Floors over unconditioned space (each assembly)
Description of assembly: N/A
U-Value of total assembly: _____
R-Value of insulation: _____

Floors slab on grade
Description of assembly: 4" Reinforced concrete slab w/ 10 mil vapor barrier on 4" crushed stone.
U-Value of total assembly: U-0.1
R-Value of insulation: R-10bi
Horizontal/vertical requirement: vertical
Slab heated: no

Section 502.4.3 Sealing of Building Envelope [Indicate where details are in the set]
☒ Joint around fenestration and door frames
☒ Junction between walls and foundations, walls at building corners, walls and structural floors or roofs, walls and roof or wall panels.
☒ Openings at penetrations of utility services through roofs, walls, and floors including but not limited to electrical, plumbing, mechanical, security and communications.
☒ Site-built fenestration and doors.
☒ Joints, seams and penetrations of air barrier system.
☒ Other openings in the building envelope.

Samples of construction details are available in Appendix 2.1

MECHANICAL SUMMARY

MECHANICAL SYSTEMS, SERVICE SYSTEMS AND EQUIPMENT
SEE MECHANICAL SHEET M2 FOR BALANCE OF INFORMATION.

Thermal Zone
winter dry bulb: _____
summer dry bulb: _____

Interior design conditions
winter dry bulb: _____
summer dry bulb: _____
relative humidity: _____

Building heating load: _____

Building cooling load: _____

Mechanical Spacing Conditioning System
Unitary
description of unit: _____
heating efficiency: _____
cooling efficiency: _____
size category of unit: _____
Boiler
Size category. If oversized, state reason.: _____
Chiller
Size category. If oversized, state reason.: _____

List equipment efficiencies: _____

ELECTRICAL SUMMARY

ELECTRICAL SYSTEM AND EQUIPMENT
SEE ELECTRICAL SHEET E1 FOR BALANCE OF INFORMATION.
Method of Compliance:
Energy Code: ☒ Prescriptive ☐ Performance

ASHRAE 90.1: ☐ Prescriptive ☐ Performance

Lighting schedule (each fixture type) SEE FIXTURE SCHEDULE ON SHEET E1
lamp type required in fixture
number of lamps in fixture
ballast type used in the fixture
number of ballasts in fixture
total wattage per fixture
total interior wattage specified vs. allowed (whole building or space by space)
total exterior wattage specified vs. allowed

Additional Prescriptive Compliance
☐ 506.2.1 More Efficient Mechanical Equipment
☒ 506.2.2 Reduced Lighting Power Density
☐ 506.2.3 Energy Recovery Ventilation Systems
☐ 506.2.4 Higher Efficiency Service Water Heating
☐ 506.2.5 On-Site Supply of Renewable Energy
☐ 506.2.6 Automatic Daylighting Control Systems

adwarchitects
environments for life
architecture planning interiors
101 WEST WORTHINGTON AVENUE
CHARLOTTE, NORTH CAROLINA 28203
P704.379.1919
F704.379.1920
www.adwarchitects.com

NCDOT Division 7: Roadside Environmental & Bituminous Unit Support Facility

Alamance County
Graham, NC

Construction Documents
Submittal SCO
#13-10060-01A

CODE INFORMATION - APPENDIX B

DATE: May 08, 2015
PROJECT NO: 13070

REVISIONS
NO: DATE: DESCRIPTION:

THIS DRAWING IS THE PROPERTY OF ADW ARCHITECTS, PA. AND SHALL NOT BE REPRODUCED OR COPIED IN WHOLE OR PART. IT SHALL NOT BE USED ON ANY OTHER PROJECT OR GIVEN TO ANY OTHER COMPANY OR AGENCY WITHOUT THE CONSENT IF ADW ARCHITECTS, PA.

SEAL
JAMES GILMORE POWELL REGISTERED ARCHITECT 5454 NORTH CAROLINA CHARLOTTE 05.08.15

SHEET NUMBER
A001

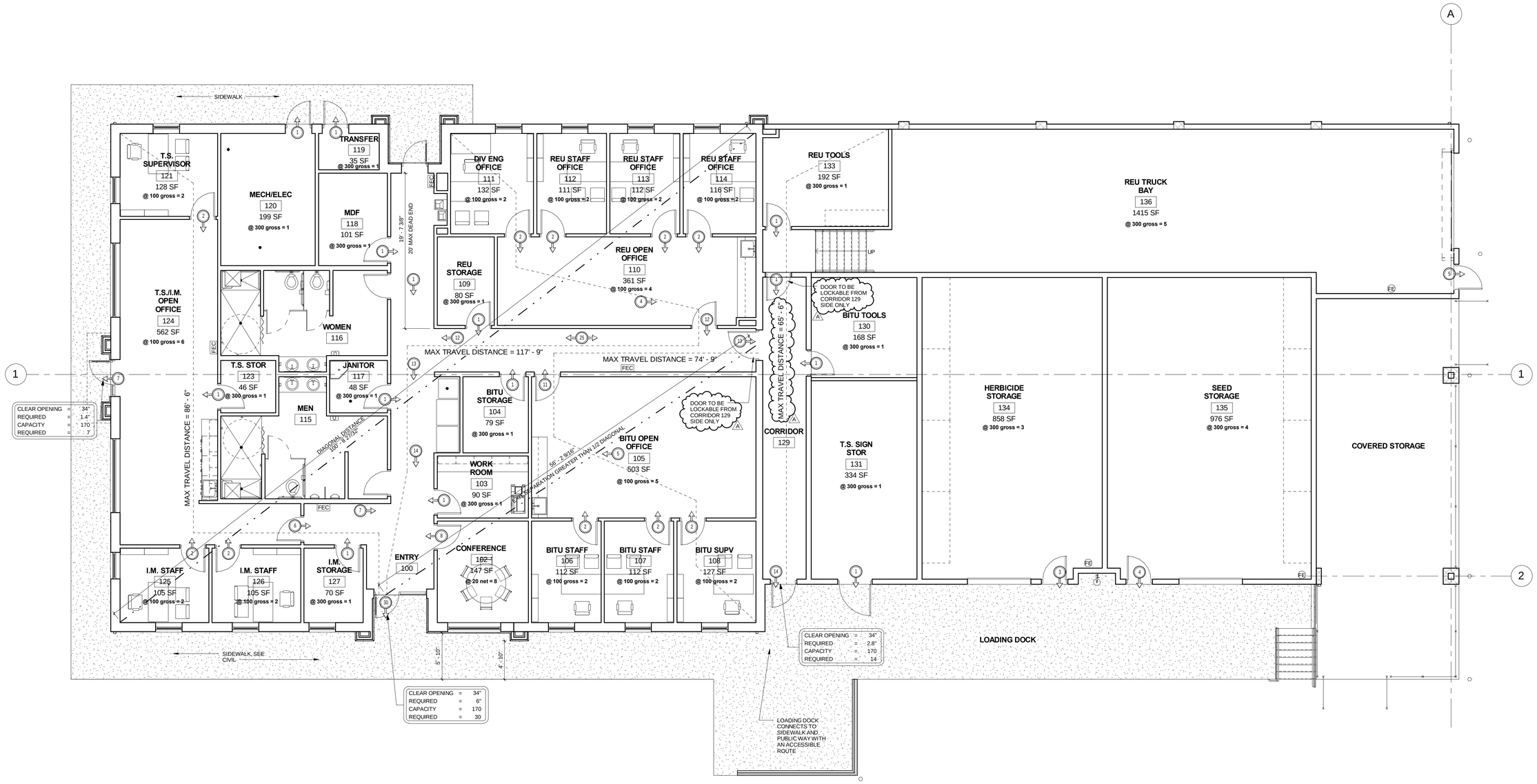

FIRST FLOOR 3/16" = 1'-0" 1

adwarchitects
environments for life
architecture planning interiors

101 WEST WORTHINGTON AVENUE
CHARLOTTE, NORTH CAROLINA 28203
P704.379.1919
F704.379.1920
www.adwarchitects.com

NCDOT Division 7: Roadside Environmental & Bituminous Unit Support Facility

Alamance County
Graham, NC

Construction Documents
Submittal SCO
#13-10060-01A

LIFE SAFETY PLAN

DATE: May 08, 2015
PROJECT NO: 13070

REVISIONS

NO:	DATE:	DESCRIPTION:
A	05.08.15	SCO Review Comments

THIS DRAWING IS THE PROPERTY OF ADW ARCHITECTS, PA. AND SHALL NOT BE REPRODUCED OR COPIED IN WHOLE OR PART. IT SHALL NOT BE USED ON ANY OTHER PROJECT OR GIVEN TO ANY OTHER COMPANY OR AGENCY WITHOUT THE CONSENT IF ADW ARCHITECTS, PA.

SEAL

JAMES GILMORE POWELL
REGISTERED ARCHITECT
5454
CHARLOTTE, N.C.
05 08 15

SHEET NUMBER

A002

GENERAL NOTES

1. WALL TYPES ARE KEYED IN ON FLOOR PLANS
2. ALL GWB PENETRATIONS TO BE SEALED WITH ACOUSTICAL SEALANT AT NON-RATED WALLS WITH SOUND ATTENUATION BATTS. SEAL PENETRATIONS @ CMU W/ACOUSTICAL SEALANT WHEN NON-RATED.
3. GLASS MAT GWB IS TO BE USED AT ALL WALLS TO RECEIVE CERAMIC TILE. MAINTAIN RATINGS AS REQUIRED.
4. PENETRATING ITEMS PASSING ENTIRELY THROUGH BOTH PROTECTIVE MEMBRANES OF BEARING WALLS ARE REQUIRED TO HAVE A FIRE-RESISTIVE RATING AND WALLS REQUIRED PROTECTED OPENINGS SHALL BE PROTECTED WITH THROUGH-PENETRATION FIRE STOPS.
5. ALL LAYERS ARE TO BE TAPED AND MUDDED. (ALL WALL TYPES)
6. ALL WALLS ARE TO BE FINISHED SMOOTH (ALL WALL TYPES). REFER TO SPECIFICATIONS FOR REQUIRED FINISH LEVELS.
7. CONTRACTOR TO PROVIDE MEANS OF ACCOMODATING MOVEMENT AT TOP TRACK OF NON-LOADBEARING STUD WALLS RUNNING PERPINDICULAR TO THE ROOF TRUSSES.
8. REFER TO STRUCTURAL FOR ADDITIONAL CMU CORE FILL REQUIREMENTS.
9. 'WET SIDE' REFERS TO WALL SURFACES SPECIFIED TO BE FINISHED WITH WALL TILE AND/OR EPOXY PAINT. TYPICAL AT RESTROOM WALLS.
10. ANY RATED WALL THAT CANNOT BE CONSTRUCTED AS LABELLED DUE TO ACCESS SHALL BE BUILT OUT OF SHAFT WALL (WALL TYPE 9).
11. ALL PIPES, CONDUIT, CABLE TRAY, AND OTHER SIMILAR UTILITIES SHALL BE CONCEALED WITH METAL STUD FRAMING & 5/8" GWB WHERE VISIBLE TO VIEW. MINIMIZE PROJECTION INTO ROOM TO GREATEST EXTENT POSSIBLE.
12. PROVIDE GLASS-FACED MOISTURE RESISTANT GYPSUM WALL BOARD AT ALL WET LOCATIONS.

WALL TYPES GENERAL NOTES | NONE | 16

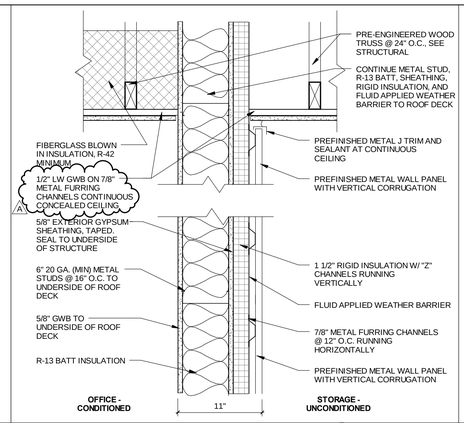

WALL TYPE 6 | 1 1/2" = 1'-0" | 12

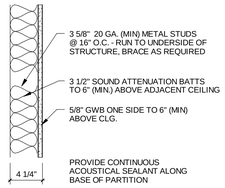

WALL TYPE 3A | 1 1/2" = 1'-0" | 8

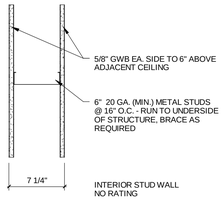

WALL TYPE 2 | 1 1/2" = 1'-0" | 4

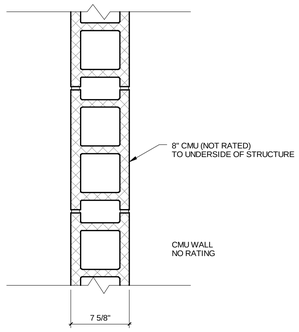

WALL TYPE 5 | 1 1/2" = 1'-0" | 11

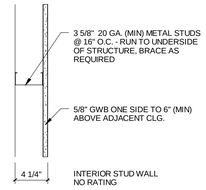

WALL TYPE 3 | 1 1/2" = 1'-0" | 7

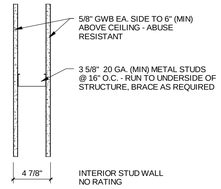

WALL TYPE 1B | 1 1/2" = 1'-0" | 3

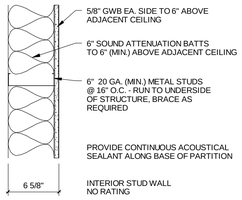

WALL TYPE 4A | 1 1/2" = 1'-0" | 10

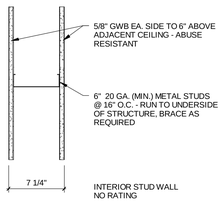

WALL TYPE 2B | 1 1/2" = 1'-0" | 6

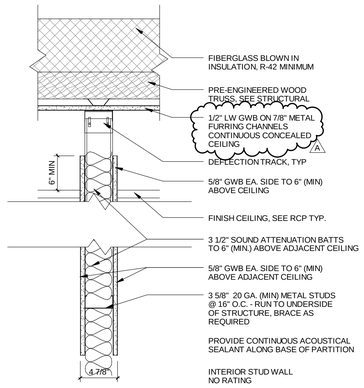

WALL TYPE 1A | 1 1/2" = 1'-0" | 2

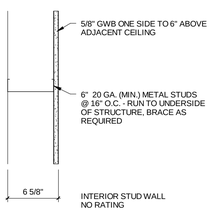

WALL TYPE 4 | 1 1/2" = 1'-0" | 9

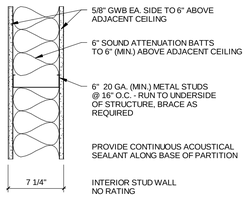

WALL TYPE 2A | 1 1/2" = 1'-0" | 5

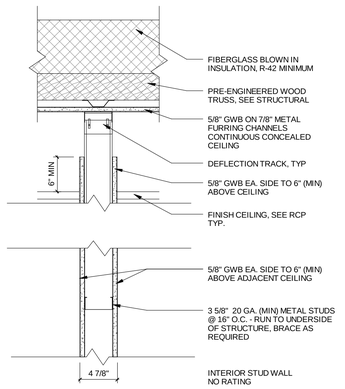

WALL TYPE 1 | 1 1/2" = 1'-0" | 1

adwarchitects
environments for life
architecture planning interiors
101 WEST WORTHINGTON AVENUE
CHARLOTTE, NORTH CAROLINA 28203
P704.379.1919
F704.379.1920
www.adwarchitects.com

NCDOT Division 7: Roadside Environmental & Bituminous Unit Support Facility

Alamance County
Graham, NC

Construction Documents
Submittal SCO
#13-10060-01A

WALL TYPES

DATE: May 08, 2015
PROJECT NO: 13070

REVISIONS

NO:	DATE:	DESCRIPTION:
A	05.08.15	SCO Review Comments

THIS DRAWING IS THE PROPERTY OF ADW ARCHITECTS, PA. AND SHALL NOT BE REPRODUCED OR COPIED IN WHOLE OR PART. IT SHALL NOT BE USED ON ANY OTHER PROJECT OR GIVEN TO ANY OTHER COMPANY OR AGENCY WITHOUT THE CONSENT IF ADW ARCHITECTS, PA.

SEAL

SHEET NUMBER

A004

I, JEFF HOPPES, P.L.S., CERTIFY THAT MAP WAS DRAWN UNDER MY SUPERVISION FROM AN ACTUAL SURVEY MADE UNDER MY SUPERVISION (DEED DESCRIPTION RECORDED IN DEED BOOK 124 PAGE 40, DEED BOOK 124 PAGE 43 AND DEED BOOK 170 PAGE 355 FOUND IN ALAMANCE COUNTY REGISTRY); THAT THE BOUNDARIES NOT SURVEYED ARE INDICATED AS DASHED LINES; THAT THE RATIO OF PRECISION OR POSITIONAL ACCURACY IS 1:15,000; AND THAT THIS MAP MEETS REQUIREMENTS OF THE STANDARDS OF PRACTICE FOR LAND SURVEYING IN NORTH CAROLINA (21 NCAC 56.1600).

I, JEFF HOPPES, P.L.S., CERTIFY THAT THIS PROJECT WAS COMPLETED UNDER MY DIRECT AND RESPONSIBLE CHARGE FROM AN ACTUAL SURVEY MADE UNDER MY SUPERVISION; THAT THIS GROUND SURVEY WAS PERFORMED AT THE 95 PERCENT CONFIDENCE LEVEL (2 SIGMA) TO MEET FEDERAL GEOGRAPHIC DATA COMMITTEE STANDARDS; THAT THE HORIZONTAL ACCURACY IS 1:15,000, THAT THE VERTICAL ACCURACY IS CLASS C AND THAT THE ORIGINAL DATA WAS OBTAINED ON JULY 29, 2014; THAT THE SURVEY WAS COMPLETED ON AUGUST 1, 2014; THAT CONTOURS SHOWN AS [BROKEN LINES] MAY NOT MEET THE STATED STANDARD; AND ALL COORDINATES ARE BASED ON NAD83/2011; AND ALL ELEVATIONS ARE BASED ON NAVD 88/GEOID2012A.

WITNESS MY ORIGINAL SIGNATURE, REGISTRATION NUMBER AND SEAL, THIS THE 21st DAY OF AUGUST, 2014.

Jeff B. Hoppes, PLS Reg. No. L-4473

NORTH CAROLINA PROFESSIONAL SEAL L-4473 LAND SURVEYOR JEFF B. HOPPES

NOTES:

1. PREPARED FROM A CURRENT FIELD SURVEY.
2. I HEREBY CERTIFY THAT THE SURVEY IS OF AN EXISTING PARCEL OR PARCELS OF LAND AND DOES NOT CREATE A NEW STREET OR CHANGE AN EXISTING STREET.
3. THIS PROPERTY IS IN FEMA SPECIAL FLOOD HAZARD AREAS ZONE AE, SHADED ZONE X, AND UNSHADED ZONE X AS SHOWN ON FLOOD INSURANCE RATE MAP NUMBER 3710888300J AND 3710884000J EFFECTIVE DATE SEPTEMBER 6, 2006.
4. ALL DISTANCES SHOWN HEREON ARE HORIZONTAL GROUND DISTANCES UNLESS OTHERWISE NOTED.
5. CONTOURS SHOWN HEREON ARE AT 1-FOOT INTERVALS.
6. THE NC GRID COORDINATES (NAD83 CORS2011) SHOWN ON THIS PLAT WERE DERIVED BY STATIC DEFERENTIAL GPS OBSERVATIONS USING NC GEODETIC DATABASE STATIONS HANFORD AND GILLEY.
7. ELEVATIONS ARE BASED ON NAVD 88/GEOID2012A DATUM.
8. ALL UNDERGROUND UTILITIES OBSERVED AND LOCATED ARE BASED ON NC811 UTILITY TICKET NUMBERS A141971177, A141971195, AND A141971213 AND FROM RECORDED DRAWINGS UNLESS OTHERWISE NOTED.
9. THE PROPERTY IS ZONED GENERAL BUSINESS "B-1" AND LIGHT INDUSTRIAL "I-1" PER CITY OF GRAHAM ZONING MAP.

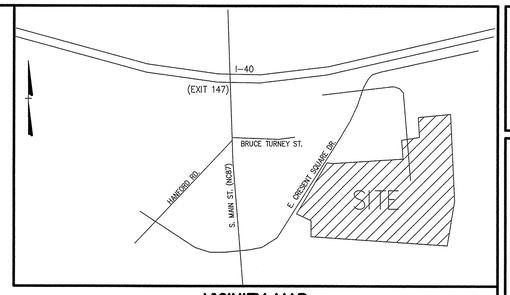

VICINITY MAP
(NOT TO SCALE)

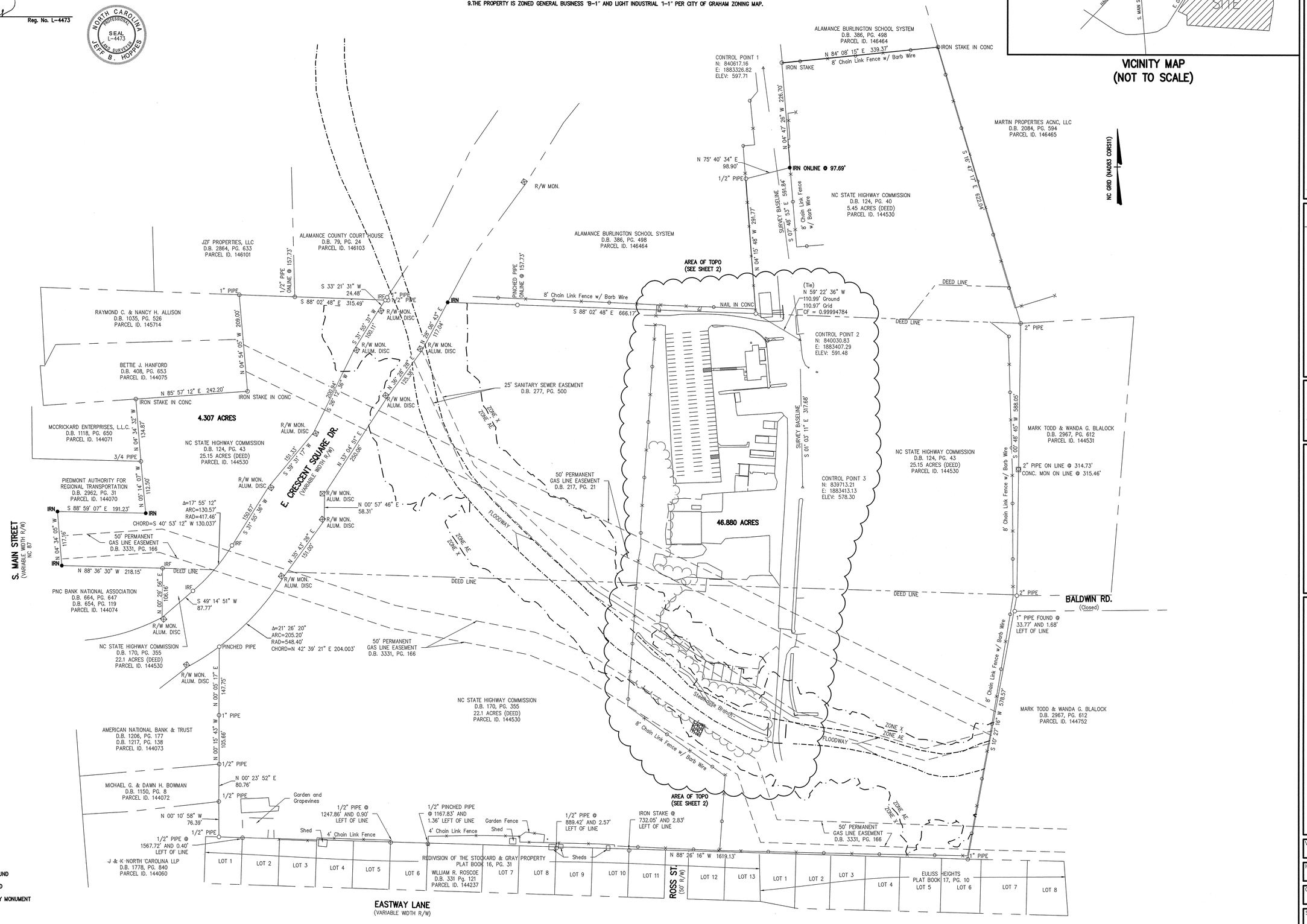

Revisions	Date

Issue Date: 8/21/2014
Drawn By: JAD
Designed By:
Checked By: JBH
Date: 8/21/2014

Mattern & Craig
CONSULTING ENGINEERS • SURVEYORS
12 BROAD STREET
ASHEVILLE, NORTH CAROLINA 28801
(828) 254-4767
FAX: (828) 254-4932

Boundary and Partial Topographical Survey for
NCDOT Division 7 Support Facilities
Roadside Environmental and
Road Oil Operations
333, 335 Prison Camp Road, Graham, NC 27253

Vertical Scale: N/A

Horizontal Scale: 1" = 80'

Commission Number: 3458

Sheet No.: 1 of 2

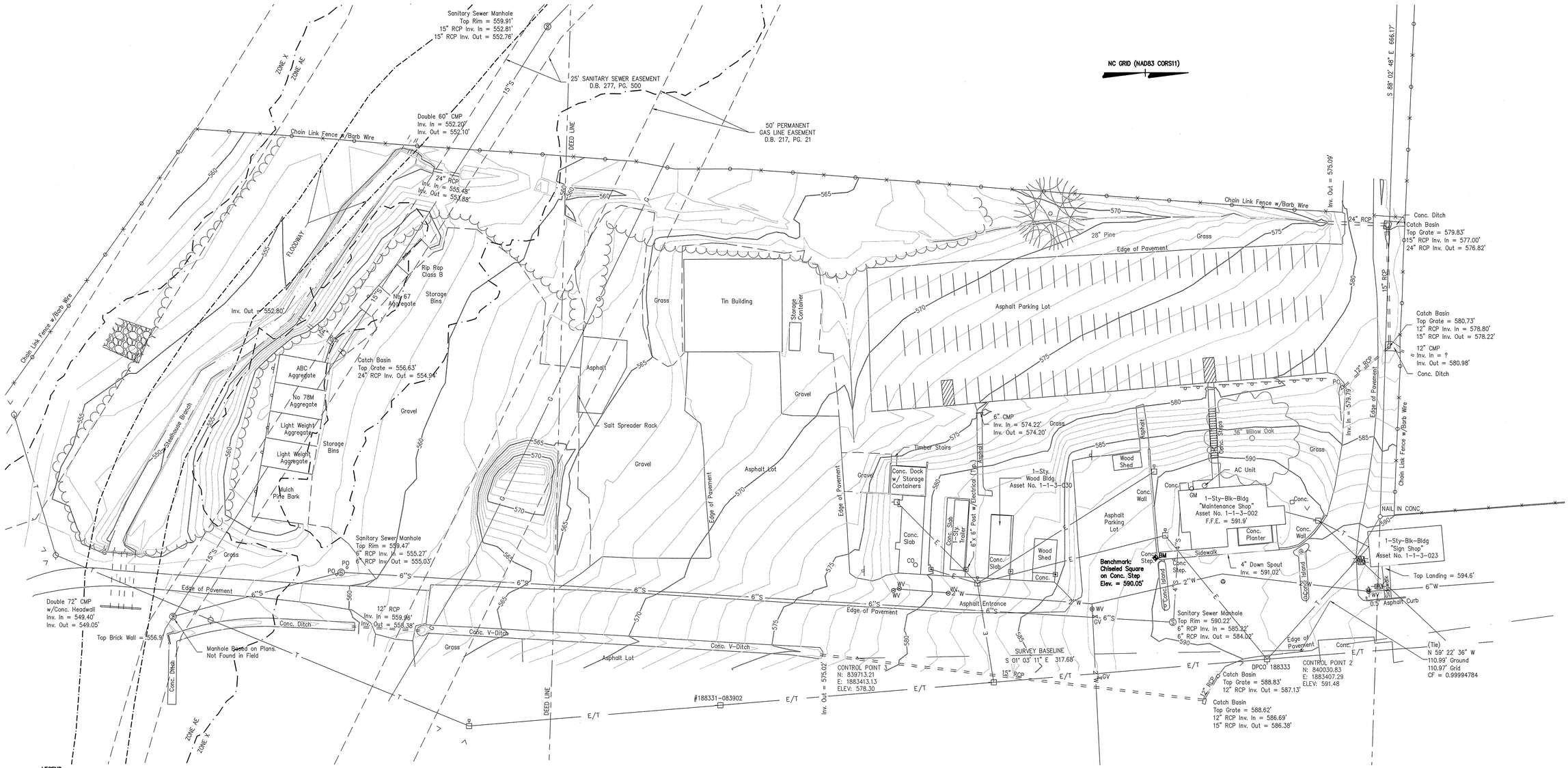

LEGEND

- POWER POLE
- TELEPHONE POLE
- LIGHT POLE
- WATER METER
- WATER VALVE
- SEWER MANHOLE
- CLEANOUT
- MONITORING WELL
- PO – POST
- GUY WIRE
- GAS METER
- GAS VALVE
- R/W – RIGHT OF WAY
- MONU. – MONUMENT
- ALUM. – ALUMINUM

IRN – 5/8" IRON ROD NEW

- E – ELECTRIC LINE
- T – TELEPHONE LINE
- W – WATER LINE
- S – SEWER LINE

UTILITY OWNERS

ELECTRIC:
DUKE ENERGY
550 SOUTH TRYON STREET
CHARLOTTE, NC 28201
CONTACT: N/A
PHONE: (980) 373-8649

GAS:
PIEDMONT NATURAL GAS
4720 PIEDMONT ROW DRIVE
CHARLOTTE, NC 28210
CONTACT: N/A
PHONE: (704) 364-3120

WATER/SEWER:
CITY OF GRAHAM
1204 EAST GILBREATH STREET
GRAHAM, NC 27253
CONTACT: VICTOR QUICK
PHONE: (336) 570-6721

0 15' 30' 60'
SCALE: 1" = 30'-0"

Revisions	Date

Issue Date: 8/21/2014
Drawn By: JAD
Designed By:
Checked By: JBH
Date: 8/21/2014

Mattern & Craig
CONSULTING ENGINEERS • SURVEYORS
12 BROAD STREET
ASHEVILLE, NORTH CAROLINA 28801
(828) 254-2201
FAX (828) 254-4062

Boundary and Partial Topographical Survey for
NCDOT Division 7 Support Facilities
Roadside Environmental and
Road Oil Operations
333, 335 Prison Camp Road, Graham, NC 27253

Vertical Scale: N/A

Horizontal Scale: 1" = 30'

Commission Number: 3458

Sheet No.: 2 of 2

STANDARD LINEWORK LEGEND

EXISTING	PROPOSED	DESCRIPTION
		BUILDING WITH PORCH OR STOOP
		FOUNDATION ONLY
		CONCRETE CURB
		CONCRETE CURB & GUTTER
		CONCRETE WALK OR SLAB
		PAVEMENT
		UNPAVED OR GRAVEL ROAD
		RAILROAD
		GUARDRAIL
		WIRE FENCE
		CHAINLINK FENCE
		WOODEN FENCE
35	35	CONTOUR, CONTOUR WITH ELEVATION
		TREE LINE
		CENTERLINE CREEK, SWALE OR DITCH
		WETLANDS LIMITS
		FLOODWAY–FLOODPLAIN
PL OR	PL OR	PROPERTY LINE
		CENTERLINE
BL	BL	BASELINE
		LIMITS OF WORK
		DIRECTION OF FLOW
SD	SD	STORM DRAIN AND ENDWALL
S	S	SANITARY SEWER
FM	FM	FORCE MAIN – PROFILE
FM	FM	FORCE MAIN – PLAN
G	G	GAS MAIN OR SERVICE LINE
W	W	WATER MAIN OR SERVICE LINE
E	E	ELECTRICAL LINE
UE	UE	UNDERGROUND ELECTRICAL LINE
T	T	TELEPHONE LINE
UT	UT	UNDERGROUND TELEPHONE LINE
FO	FO	FIBER OPTIC LINE
FO–U	FO–U	UNDERGROUND FIBER OPTIC LINE
C	C	CABLE LINE
UTIL	UTIL	UTILITY CONDUIT
E/T	E/T	ELECTRICAL\TELEPHONE LINES
E/T/C	E/T/C	ELECTRICAL\TELEPHONE\CABLE LINES
PE OR	PE OR	PERMANENT EASEMENT
TE OR	TE OR	TEMPORARY EASEMENT
		ABANDON OR REMOVE
		PAVED DITCH
		DRIVEWAY CULVERT
OR	OR	CULVERT WITH FLARED END SECT.

PIPE FITTINGS

	11.25° BEND		COUPLING
	22.5° BEND		PIPE JOINT MARK
	45° BEND		PIPE TEE
	90° BEND		

STANDARD SYMBOL LEGEND

EXIST	PROP	DESCRIPTION	EXIST	PROP	DESCRIPTION
AST	AST	ABOVEGROUND STORAGE TANK			PUMP
AI		ANGLE IRON			REDUCER
ARV	ARV	AIR RELEASE VALVE	RR		RAILROAD SIGNAL
AX		AXLE	RRS	RRS	RAILROAD SPIKE
BFP	BFP	BACK FLOW PREVENTER			ROW MONUMENT
		BASKETBALL GOAL	SC	SC	SIGNAL CONTROLLER
BH	BH	GEOLOGIC BORE HOLE	SEP	SEP	SEPTIC TANK
BL		BASELINE			SHRUB – 3 TYPES
		BENCHMARK			
BOL	BOL	BOLLARD			SATELLITE DISH
BOV	BOV	BLOW OFF VALVE			SIGN
		CATCH BASIN		>	SANITARY SEWER FLOW
		CHECK DAM	S	S	SANITARY SEWER MANHOLE
℄	℄	CENTERLINE	D	D	STORM DRAIN MANHOLE
CO	CO	CLEAN OUT	STOP	STOP	PAINTED STOP MARKER
CP#	× CP#	COORDINATE POINT			PAINTED STOP BAR
	C	CABLE PEDESTAL	AHEAD	AHEAD	PAINTED AHEAD MARKER
	//	DEMOLISH MARK	ENDS	ENDS	PAINTED ENDS MARKER
		DROP INLET	LANE	LANE	PAINTED LANE MARKER
ELEV	× ELEV	SPOT ELEVATIONS	ONLY	ONLY	PAINTED ONLY MARKER
EB	EB	ELECTRIC BOX			
E	E	ELECTRIC MANHOLE	RXR	RXR	PAINTED RXR MARKER
EM	• EM	ELECTRIC METER			
E	E	ELECTRIC PEDESTAL	SCHOOL	SCHOOL	PAINTED SCHOOL MARKER
ET	ET	ELECTRIC TRANSFORMER	YIELD	YIELD	PAINTED YIELD MARKER
		FIRE HYDRANT			PAINTED YIELD BAR
		FLOW ARROW			3 WAY TRAFFIC ARROW
		FLAG POLE			TRAFFIC ARROW – LEFT
F		FENCE POST			TRAFFIC ARROW – RIGHT
F-UST		FILL PORT–UST			TRAFFIC ARROW – STRAIGHT
FP	FP	FUEL PUMP			TRAFFIC ARROWS– STRAIGHT & L
GM	GM	GAS METER			TRAFFIC ARROWS– STRAIGHT & R
		GROUND SHOT	TB	TB	TRAFFIC CONTROL BOX
GP	GP	GUY POLE	TM	TM	TRAFFIC MANHOLE
>	>	GUY WIRE	T	T	TELEPHONE MANHOLE
GV	GV	GAS VALVE	E		TELEPHONE – PAY PHONE
		GRAVE MARKER			PIPE TERMINIS
		ACCESSIBLE SYMBOL			TRAFFIC LIGHT POLE W/O & W/ LIGHT STANDARDS
ICV	ICV	IRRIGATION CONTROL VALVE			
IPF		IRON PIN – FOUND			TELEPHONE POLE
	IPN	IRON PIN – NEW	T	T	TELEPHONE PEDESTAL
IPO		IRON PIN – OLD			TREE – 4 TYPES
IRO IRF		IRON ROD – OLD / FOUND			
	IRCN	IRON ROD W/ CAP – NEW			
	IRN	IRON ROD – NEW			
IRS		IRON ROD – SET			
JB	JB	JUNCTION BOX			TREE EVERGREEN – 3 TYPES
		LIGHT POLE			
LPT		LIQUID PROPANE TANK			
MB		MAIL BOX			
MM	MM	MASTER METER	TV	TV	TELEPHONE VAULT
		MONUMENT	UST	UST	UNDERGROUND STORAGE TANK
		MONITORING WELL	VN		VENT – MANHOLE, UST, ETC
PB		PAPER BOX	VV	VV	VALVE VAULT
		PIN CONTROL POINT	WELL		WELL
PF		PIPE – FOUND	W	W	WATER MANHOLE
	PKN	PK NAIL NEW	WM	WM	WATER METER
PKO		PK NAIL OLD	WV	WV	WATER VALVE
PL		PROPERTY LINE			AERIAL PHOTO TARGET
		PLUG – WATERLINE			
		DEFAULT POINT MARK			
PM	PM	PARKING METER			
		POWER POLE			
PRV	PRV	PRESSURE REDUCING VALVE			
PS	PS	PLANTED STONE			
		PULL BOX			

SECTION SYMBOL

C3.1 / C4

- SHEET WHERE SECTION IS DRAWN
- DETAIL NUMBER
- SHEET WHERE SECTION IS CUT

EROSION AND SEDIMENT CONTROL SYMBOLS

BF	POROUS BAFFLES
B/M	BLANKETS/MATTINGS
CD	CHECK DAM
CE	CONSTRUCTION ENTRANCE/EXIT
CIP	CULVERT INLET PROTECTION
CRS	CONSTRUCTION ROAD STABILIZATION
DC	DUST CONTROL
DD	TEMPORARY DIVERSION DIKE
DI	TEMPORARY DIVERSION
DS	DEWATER STRUCTURE
DV	DIVERSION DITCH
IP	INLET PROTECTION
LIM	LIMITS OF CONSTRUCTION
MU	MULCHING
OP	OUTLET PROTECTION
PS	PERMANENT SEEDING
RR	RIPRAP
SAF	SAFETY FENCE
SB	SEDIMENT BASIN
SD	SLOPE DRAIN
SF	SILT FENCE
SO	SODDING
ST	TEMPORARY SEDIMENT TRAP
STB	STRAW BALE BARRIER
TP	TREE PROTECTION
TS	TEMPORARY SEEDING
USC	UTILITY STREAM CROSSING
TSD	TEMPORARY SILT DITCH

MATERIALS SYMBOLS

METAL	FINISHED WOOD OR PLYWOOD
BRICK	GRAVEL OR STONE
CONCRETE MASONRY	EARTH
CONCRETE	INSULATION (RIGID)
GROUT OR FINISHED CONCRETE	WOOD BLOCKING
PAVEMENT	

GENERAL NOTES

1. THE LOCATION OF EXISTING UTILITIES, INCLUDING UNDERGROUND UTILITIES, IS INDICATED ON THE DRAWINGS INSOFAR AS THEIR EXISTENCE AND LOCATION WERE KNOWN AT THE TIME OF THE PREPARATION OF THE DRAWINGS. HOWEVER, NOTHING IN THESE CONTRACT DOCUMENTS SHALL BE CONSTRUED AS A GUARANTEE THAT SUCH UTILITIES ARE IN THE LOCATION INDICATED OR THAT THEY ACTUALLY EXIST, OR THAT OTHER UTILITIES ARE NOT WITHIN THE AREA OF OPERATIONS. THE CONTRACTOR SHALL MAKE ALL NECESSARY INVESTIGATIONS TO DETERMINE THE EXISTENCE AND LOCATIONS OF SUCH UTILITIES. THE CONTRACTOR SHALL PAY FOR ANY DAMAGE TO AND FOR ANY MAINTENANCE AND PROTECTION OF EXISTING UTILITIES AND STRUCTURES.
2. CONTRACTOR SHALL CONSULT WITH THE LOCAL POWER COMPANY TO DETERMINE SIZE AND EXACT LOCATION OF ELECTRICAL DISTRIBUTION COMPONENTS.
3. ALL NECESSARY EROSION AND SEDIMENT CONTROL MEASURES SHALL BE INSTALLED AND MAINTAINED IN ACCORDANCE WITH THE REQUIREMENTS OF THE 2012 NCDOT ROADWAY STANDARD DRAWINGS AND STANDARD SPECIFICATIONS.
4. ALL DIMENSIONS ARE TO FACE OF CURB UNLESS OTHERWISE SHOWN.
5. CONTRACTOR SHALL CONTACT: THE NORTH CAROLINA ONE CALL CENTER, INC. TEL# 1–800–632–4949 FOR LOCATION OF ALL UTILITIES AT LEAST 72 HRS PRIOR TO BEGINNING CONSTRUCTION.
6. THE CONTRACTOR SHALL BE RESPONSIBLE FOR PROVIDING ALL TRAFFIC CONTROL MEASURES NECESSARY FOR MAINTAINING A SAFE WORKING ENVIRONMENT AT ALL TIMES.
7. PROPERTY IS STATE OWNED AND SUBJECT TO SCO REVIEW. (B)
8. THE CONTRACTOR SHALL BECOME FAMILIAR WITH AND ABIDE BY THE NCDOT SPECIAL PROVISIONS LOCATED IN SECTION 312500 IN THE CONTRACT DOCUMENTS.

SITE PLANS SHEET INDEX

SHEET	TITLE
C100....	LEGEND AND GENERAL NOTES
C101....	EXISTING CONDITIONS PLAN
C102....	DEMOLITION PLAN
C103....	INITIAL GRADING AND EROSION CONTROL PLAN
C104....	UTILITY PLAN
C105....	SITE PLAN
C106....	FINE GRADING, DRAINAGE, AND STORMWATER MANAGEMENT PLAN
C201....	EROSION CONTROL DETAILS
C202....	UTILITY DETAILS
C203....	SITE DETAILS

adwarchitects
environments for life
architecture planning interiors
101 WEST WORTHINGTON AVENUE
CHARLOTTE, NORTH CAROLINA 28203
P704.379.1919
F704.379.1920
www.adwarchitects.com

Mattern & Craig
CONSULTING ENGINEERS • SURVEYORS
NC FIRM No. C–1154
12 BROAD STREET
ASHEVILLE, NORTH CAROLINA 28801
(828) 254–2201
FAX (828) 254–4562

NCDOT Division 7: Roadside Environmental & Bituminous Unit Support Facility

Alamance County
Graham, NC

Construction Documents
Submittal SCO
#13-10060-01A

LEGEND AND GENERAL NOTES

DATE: March 10, 2015
PROJECT NO: 13070 / 3453

REVISIONS:

NO:	DATE:	DESCRIPTION:
B	5.29.15	City of Graham Revisions

THIS DRAWING IS THE PROPERTY OF MATTERN & CRAIG AND SHALL NOT BE REPRODUCED OR COPIED IN WHOLE OR PART. IT SHALL NOT BE USED ON ANY OTHER PROJECT OR GIVEN TO ANY OTHER COMPANY OR AGENCY WITHOUT THE CONSENT OF MATTERN & CRAIG.

SEAL

NORTH CAROLINA PROFESSIONAL SEAL 036336 ENGINEER MICHAEL S. HOMESLEY 9/8/2015

SHEET NUMBER

C100

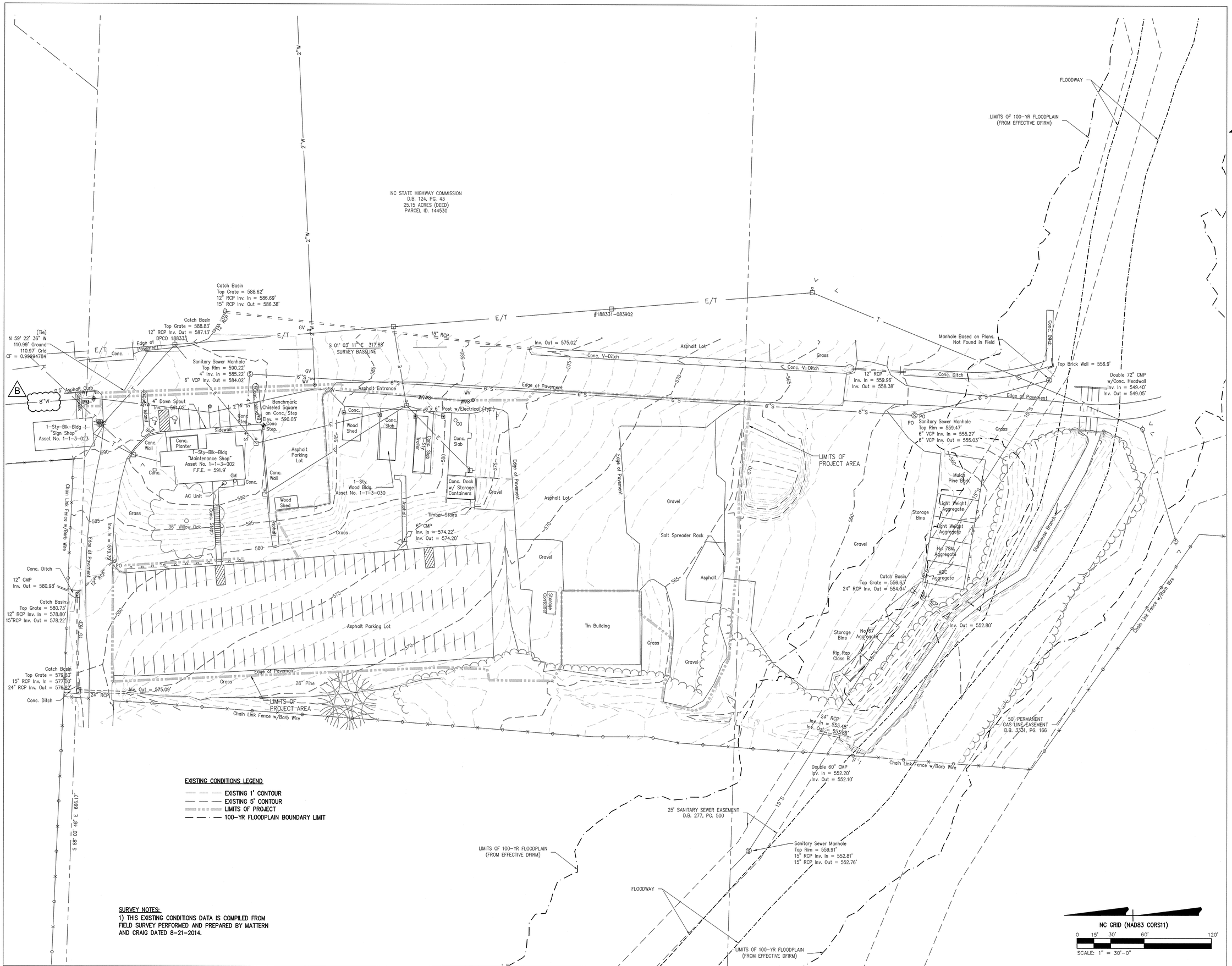

EXISTING CONDITIONS PLAN | 1" = 30' | C101

adwarchitects
environments for life
architecture planning interiors
101 WEST WORTHINGTON AVENUE
CHARLOTTE, NORTH CAROLINA 28203
P704.379.1919
F704.379.1920
www.adwarchitects.com

Mattern & Craig
CONSULTING ENGINEERS • SURVEYORS
NC FIRM No. C-1154
12 BROAD STREET
ASHEVILLE, NORTH CAROLINA 28801
(828) 254-2201
FAX (828) 254-4562

NCDOT Division 7: Roadside Environmental & Bituminous Unit Support Facility

Alamance County
Graham, NC

Construction Documents
Submittal SCO
#13-10060-01A

EXISTING CONDITIONS PLAN

DATE: March 10, 2015
PROJECT NO: 13070 / 3453

REVISIONS:

NO:	DATE:	DESCRIPTION:
B	05.29.15	City of Graham Revisions

THIS DRAWING IS THE PROPERTY OF MATTERN & CRAIG AND SHALL NOT BE REPRODUCED OR COPIED IN WHOLE OR PART. IT SHALL NOT BE USED ON ANY OTHER PROJECT OR GIVEN TO ANY OTHER COMPANY OR AGENCY WITHOUT THE CONSENT OF MATTERN & CRAIG.

SEAL

NORTH CAROLINA PROFESSIONAL SEAL 036336 ENGINEER MICHAEL S. HOMEWOOD

SHEET NUMBER

C101

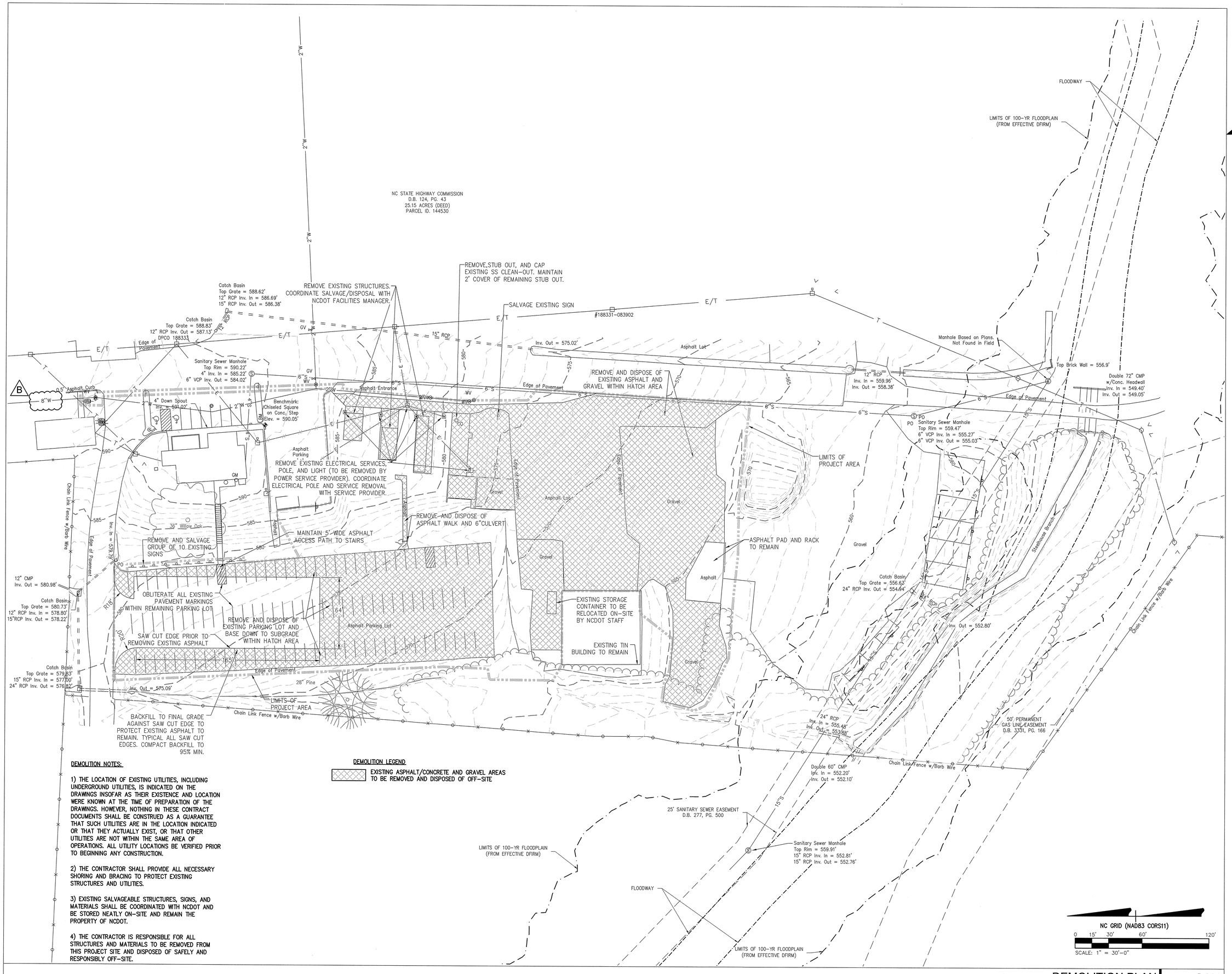

DEMOLITION NOTES:

1) THE LOCATION OF EXISTING UTILITIES, INCLUDING UNDERGROUND UTILITIES, IS INDICATED ON THE DRAWINGS INSOFAR AS THEIR EXISTENCE AND LOCATION WERE KNOWN AT THE TIME OF PREPARATION OF THE DRAWINGS. HOWEVER, NOTHING IN THESE CONTRACT DOCUMENTS SHALL BE CONSTRUED AS A GUARANTEE THAT SUCH UTILITIES ARE IN THE LOCATION INDICATED OR THAT THEY ACTUALLY EXIST, OR THAT OTHER UTILITIES ARE NOT WITHIN THE SAME AREA OF OPERATIONS. ALL UTILITY LOCATIONS BE VERIFIED PRIOR TO BEGINNING ANY CONSTRUCTION.

2) THE CONTRACTOR SHALL PROVIDE ALL NECESSARY SHORING AND BRACING TO PROTECT EXISTING STRUCTURES AND UTILITIES.

3) EXISTING SALVAGEABLE STRUCTURES, SIGNS, AND MATERIALS SHALL BE COORDINATED WITH NCDOT AND BE STORED NEATLY ON-SITE AND REMAIN THE PROPERTY OF NCDOT.

4) THE CONTRACTOR IS RESPONSIBLE FOR ALL STRUCTURES AND MATERIALS TO BE REMOVED FROM THIS PROJECT SITE AND DISPOSED OF SAFELY AND RESPONSIBLY OFF-SITE.

DEMOLITION LEGEND

EXISTING ASPHALT/CONCRETE AND GRAVEL AREAS TO BE REMOVED AND DISPOSED OF OFF-SITE

DEMOLITION PLAN | 1" = 30' | C102

adwarchitects
environments for life
architecture planning interiors
101 WEST WORTHINGTON AVENUE
CHARLOTTE, NORTH CAROLINA 28203
P704.379.1919
F704.379.1920
www.adwarchitects.com

Mattern & Craig
CONSULTING ENGINEERS • SURVEYORS
NC FIRM No. C-1154
12 BROAD STREET
ASHEVILLE, NORTH CAROLINA 28801
(828) 254-2201
FAX (828) 254-4562

NCDOT Division 7: Roadside Environmental & Bituminous Unit Support Facility

Alamance County
Graham, NC

Construction Documents
Submittal SCO
#13-10060-01A

DEMOLITION PLAN

DATE: March 10, 2015
PROJECT NO: 13070 / 3453

REVISIONS:

NO:	DATE:	DESCRIPTION:
B	05.29.15	City of Graham Revisions

THIS DRAWING IS THE PROPERTY OF MATTERN & CRAIG AND SHALL NOT BE REPRODUCED OR COPIED IN WHOLE OR PART. IT SHALL NOT BE USED ON ANY OTHER PROJECT OR GIVEN TO ANY OTHER COMPANY OR AGENCY WITHOUT THE CONSENT OF MATTERN & CRAIG.

SEAL

NORTH CAROLINA PROFESSIONAL SEAL 036336 ENGINEER MITCHELL S. HOMEWOOD

SHEET NUMBER

C102

SITE DESCRIPTION	STABILIZATION TIME	TIMEFRAME EXCEPTIONS
PERIMETER DIKES, SWALES, DITCHES AND SLOPES	7 DAYS	NONE
HIGH QUALITY WATER (HQW) ZONES	7 DAYS	NONE
SLOPES STEEPER THAN 3:1	7 DAYS	IF SLOPES ARE 10' OR LESS IN LENGTH AND ARE NOT STEEPER THAN 2:1, 14 DAYS ARE ALLOWED.
SLOPES 3:1 OR FLATTER	14 DAYS	7 DAYS FOR SLOPES GREATER THAN 50' IN LENGTH.
ALL OTHER AREAS WITH SLOPES FLATTER THAN 4:1	14 DAYS	NONE, EXCEPT FOR PERIMETERS AND HQW ZONES.

EROSION AND SEDIMENT CONTROL NOTES

1. ALL EROSION AND SEDIMENT CONTROL MEASURES SHALL BE INSTALLED AND MAINTAINED IN ACCORDANCE WITH THE REQUIREMENTS OF THE NORTH CAROLINA DEPARTMENT OF TRANSPORTATION (NCDOT).
2. THE CONTRACTOR SHALL INSTALL ALL EROSION CONTROL MEASURES PRIOR TO COMMENCING WITH ANY LAND DISTURBANCE ACTIVITIES.
3. ALL ACCUMULATED SEDIMENT SHALL BE REMOVED FROM THE SEDIMENT TRAPS REGULARLY.
4. THE CONTRACTOR SHALL BECOME FAMILIAR WITH AND ABIDE BY THE NCDOT SPECIAL PROVISIONS LOCATED IN SECTION 312500 IN THE CONTRACT DOCUMENTS.
5. FERTILIZER APPLICATIONS SHALL BE IN ACCORDANCE WITH NCDOT SPECIAL PROVISIONS LOCATED IN SECTION 312500 IN THE CONTRACT DOCUMENTS.

B

GENERAL NOTES

1. TOTAL DISTURBED AREA = 2.15 ACRES
2. SEE DETAIL SHEET C201 FOR EROSION AND SEDIMENT CONTROL DETAILS.

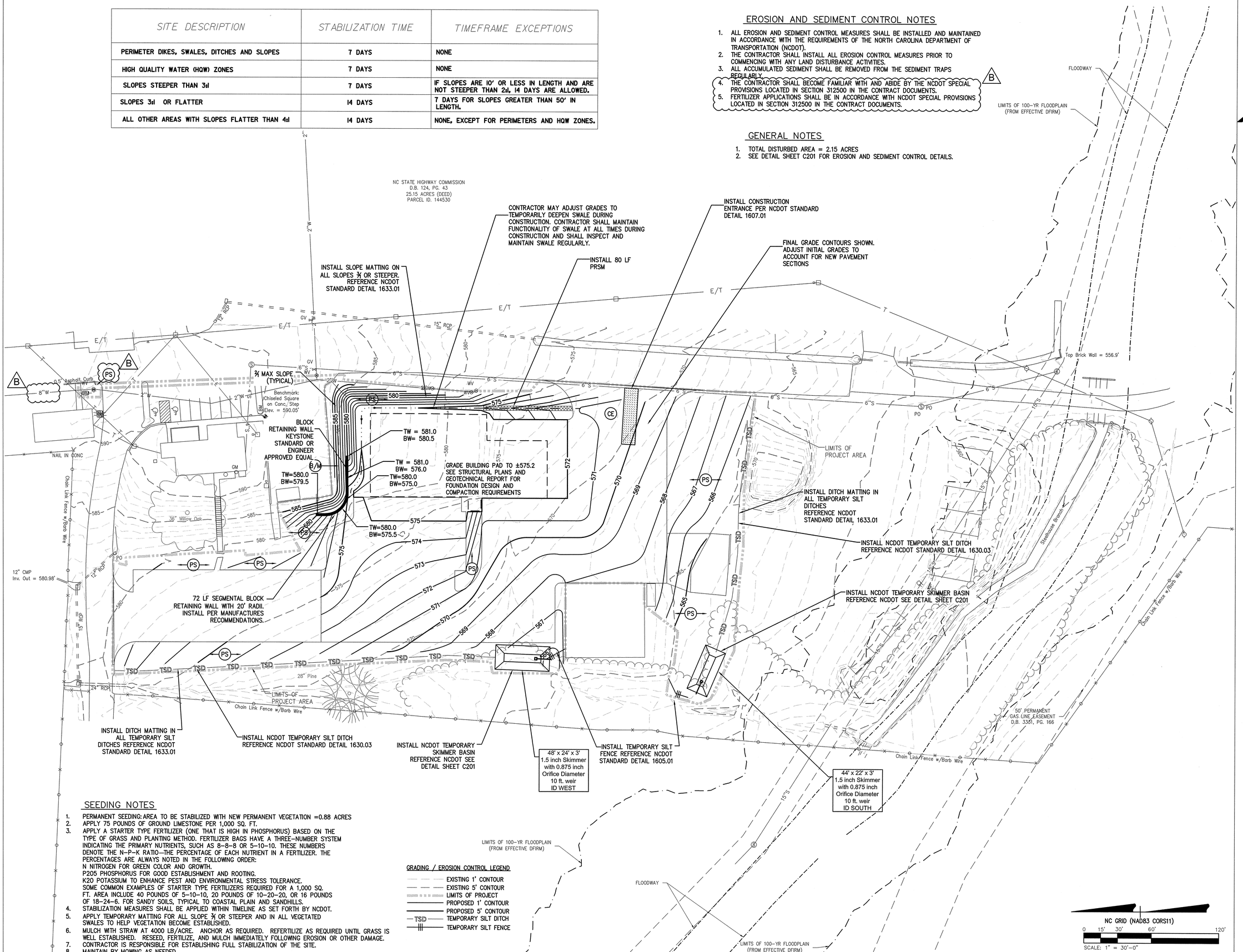

SEEDING NOTES

1. PERMANENT SEEDING: AREA TO BE STABILIZED WITH NEW PERMANENT VEGETATION =0.88 ACRES
2. APPLY 75 POUNDS OF GROUND LIMESTONE PER 1,000 SQ. FT.
3. APPLY A STARTER TYPE FERTILIZER (ONE THAT IS HIGH IN PHOSPHORUS) BASED ON THE TYPE OF GRASS AND PLANTING METHOD. FERTILIZER BAGS HAVE A THREE-NUMBER SYSTEM INDICATING THE PRIMARY NUTRIENTS, SUCH AS 8-8-8 OR 5-10-10. THESE NUMBERS DENOTE THE N-P-K RATIO-THE PERCENTAGE OF EACH NUTRIENT IN A FERTILIZER. THE PERCENTAGES ARE ALWAYS NOTED IN THE FOLLOWING ORDER:
   N NITROGEN FOR GREEN COLOR AND GROWTH.
   P205 PHOSPHORUS FOR GOOD ESTABLISHMENT AND ROOTING.
   K20 POTASSIUM TO ENHANCE PEST AND ENVIRONMENTAL STRESS TOLERANCE.
   SOME COMMON EXAMPLES OF STARTER TYPE FERTILIZERS REQUIRED FOR A 1,000 SQ. FT. AREA INCLUDE 40 POUNDS OF 5-10-10, 20 POUNDS OF 10-20-20, OR 16 POUNDS OF 18-24-6. FOR SANDY SOILS, TYPICAL TO COASTAL PLAIN AND SANDHILLS.
4. STABILIZATION MEASURES SHALL BE APPLIED WITHIN TIMELINE AS SET FORTH BY NCDOT.
5. APPLY TEMPORARY MATTING FOR ALL SLOPE 3:1 OR STEEPER AND IN ALL VEGETATED SWALES TO HELP VEGETATION BECOME ESTABLISHED.
6. MULCH WITH STRAW AT 4000 LB/ACRE. ANCHOR AS REQUIRED. REFERTILIZE AS REQUIRED UNTIL GRASS IS WELL ESTABLISHED. RESEED, FERTILIZE, AND MULCH IMMEDIATELY FOLLOWING EROSION OR OTHER DAMAGE.
7. CONTRACTOR IS RESPONSIBLE FOR ESTABLISHING FULL STABILIZATION OF THE SITE.
8. MAINTAIN BY MOWING AS NEEDED.

GRADING / EROSION CONTROL LEGEND

- EXISTING 1' CONTOUR
- EXISTING 5' CONTOUR
- LIMITS OF PROJECT
- PROPOSED 1' CONTOUR
- PROPOSED 5' CONTOUR
- TSD — TEMPORARY SILT DITCH
- TEMPORARY SILT FENCE

INITIAL GRADING AND EROSION CONTROL PLAN | 1" = 30' | C103

adwarchitects
environments for life
architecture planning interiors
101 WEST WORTHINGTON AVENUE
CHARLOTTE, NORTH CAROLINA 28203
P704.379.1919
F704.379.1920
www.adwarchitects.com

Mattern & Craig
CONSULTING ENGINEERS • SURVEYORS
NC FIRM No. C-1154
12 BROAD STREET
ASHEVILLE, NORTH CAROLINA 28801
(828) 254-2201
FAX (828) 254-4562

NCDOT Division 7: Roadside Environmental & Bituminous Unit Support Facility

Alamance County
Graham, NC

DANA BOLDEN
LEVEL IIIA NAME

3171
LEVEL IIIA CERTIFICATION NO.

Construction Documents
Submittal SCO
#13-10060-01A

INITIAL GRADING AND EROSION CONTROL PLAN

DATE: March 10, 2015
PROJECT NO: 13070 / 3453

REVISIONS:

NO:	DATE:	DESCRIPTION:
B	05.29.15	City of Graham Revisions

THIS DRAWING IS THE PROPERTY OF MATTERN & CRAIG AND SHALL NOT BE REPRODUCED OR COPIED IN WHOLE OR PART. IT SHALL NOT BE USED ON ANY OTHER PROJECT OR GIVEN TO ANY OTHER COMPANY OR AGENCY WITHOUT THE CONSENT OF MATTERN & CRAIG.

SEAL

SHEET NUMBER

C103

EXISTING FIRE HYDRANT FLOW DATA

FIRE HYDRANT ID	LOCATION	TEST DATE*	ELEVATION	STATIC	FLOW RATE	RESIDUAL
C.O.G. 4-66	±600' NORTH OF BLD	MAY 5, 2015	595'	90 PSI	1,130 GPM	64 PSI
C.O.G. 4-67	±250' NORTH OF BLD	MAY 5, 2015	593'	90 PSI	1,060 GPM	62 PSI

PROPOSED / EXISTING AVAILABLE FIRE HYDRANT FLOW DATA

FIRE HYDRANT ID	LOCATION	TEST DATE	ELEVATION	STATIC	FLOW RATE	RESIDUAL
C.O.G. 4-66	±600' NORTH OF BLD	N/A**	595'	90 PSI	0 GPM**	28 PSI**
C.O.G. 4-67	±250' NORTH OF BLD	N/A**	593'	90 PSI	1,000 GPM**	20 PSI**
PROPOSED NEW FH	±50' NE OF BLD	N/A**	587'	92 PSI**	750 GPM**	22 PSI**

TOTAL COMBINED AVAILABLE FIRE FLOW RATE OF 1,750 GPM**

* FIRE HYDRANT FLOW TESTS PERFORMED BY CITY OF GRAHAM STAFF AND REPRESENT INDIVIDUAL FLOW RATES OF ONE HYDRANT OPEN AT A TIME

** CALCULATED FLOWS AND PRESSURES FROM CALIBRATED HYDRAULIC MODEL (WATERCADD) BASED ON EXISTING FIRE HYDRANT FLOWS, RESIDUAL PRESSURES, EXISTING AND PROPOSED WATER LINE SIZES AND MATERIALS

REQUIRED FIRE FLOW FOR PROPOSED STRUCTURE IS 1,697 GPM BASED ON THE IOWA STATE UNIVERSITY METHOD

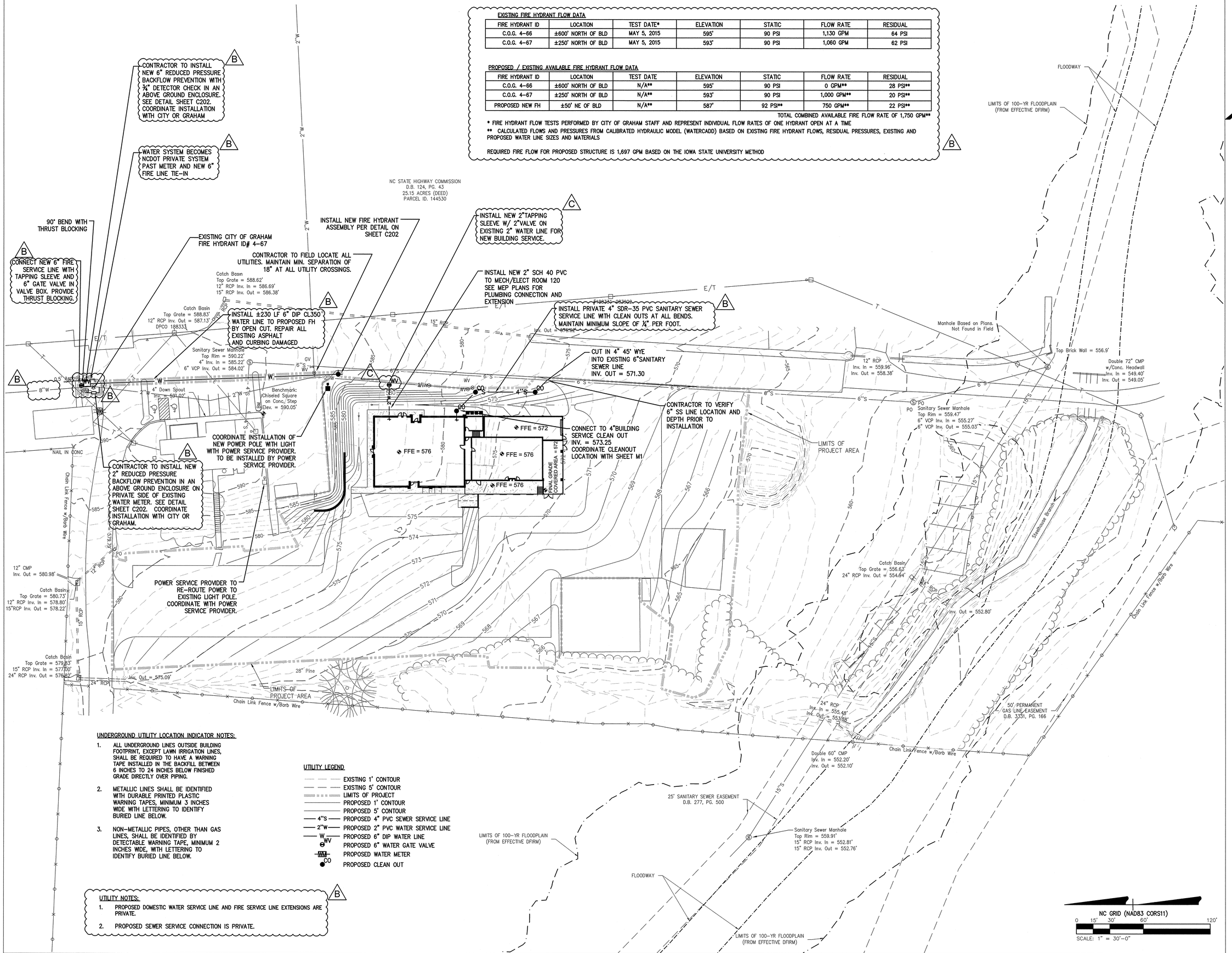

UNDERGROUND UTILITY LOCATION INDICATOR NOTES:

1. ALL UNDERGROUND LINES OUTSIDE BUILDING FOOTPRINT, EXCEPT LAWN IRRIGATION LINES, SHALL BE REQUIRED TO HAVE A WARNING TAPE INSTALLED IN THE BACKFILL BETWEEN 6 INCHES TO 24 INCHES BELOW FINISHED GRADE DIRECTLY OVER PIPING.
2. METALLIC LINES SHALL BE IDENTIFIED WITH DURABLE PRINTED PLASTIC WARNING TAPES, MINIMUM 3 INCHES WIDE WITH LETTERING TO IDENTIFY BURIED LINE BELOW.
3. NON-METALLIC PIPES, OTHER THAN GAS LINES, SHALL BE IDENTIFIED BY DETECTABLE WARNING TAPE, MINIMUM 2 INCHES WIDE, WITH LETTERING TO IDENTIFY BURIED LINE BELOW.

UTILITY LEGEND

- EXISTING 1' CONTOUR
- EXISTING 5' CONTOUR
- LIMITS OF PROJECT
- PROPOSED 1' CONTOUR
- PROPOSED 5' CONTOUR
- 4"S — PROPOSED 4" PVC SEWER SERVICE LINE
- 2"W — PROPOSED 2" PVC WATER SERVICE LINE
- W — PROPOSED 6" DIP WATER LINE
- WV — PROPOSED 6" WATER GATE VALVE
- WM — PROPOSED WATER METER
- CO — PROPOSED CLEAN OUT

UTILITY NOTES:

1. PROPOSED DOMESTIC WATER SERVICE LINE AND FIRE SERVICE LINE EXTENSIONS ARE PRIVATE.
2. PROPOSED SEWER SERVICE CONNECTION IS PRIVATE.

UTILITY PLAN | 1" = 30' | C104

adwarchitects
environments for life
architecture planning interiors
101 WEST WORTHINGTON AVENUE
CHARLOTTE, NORTH CAROLINA 28203
P704.379.1919
F704.379.1920
www.adwarchitects.com

Mattern & Craig
CONSULTING ENGINEERS • SURVEYORS
NC FIRM No. C-1154
12 BROAD STREET
ASHEVILLE, NORTH CAROLINA 28801
(828) 254-2201
FAX (828) 254-4562

NCDOT Division 7: Roadside Environmental & Bituminous Unit Support Facility

Alamance County
Graham, NC

Construction Documents
Submittal SCO
#13-10060-01A

UTILITY PLAN

DATE: March 10, 2015
PROJECT NO: 13070 / 3453

REVISIONS:

NO:	DATE:	DESCRIPTION:
B	05.29.15	City of Graham Revisions
C	07.09.15	City of Graham Revisions 2

THIS DRAWING IS THE PROPERTY OF MATTERN & CRAIG AND SHALL NOT BE REPRODUCED OR COPIED IN WHOLE OR PART. IT SHALL NOT BE USED ON ANY OTHER PROJECT OR GIVEN TO ANY OTHER COMPANY OR AGENCY WITHOUT THE CONSENT OF MATTERN & CRAIG.

SEAL

SHEET NUMBER

C104

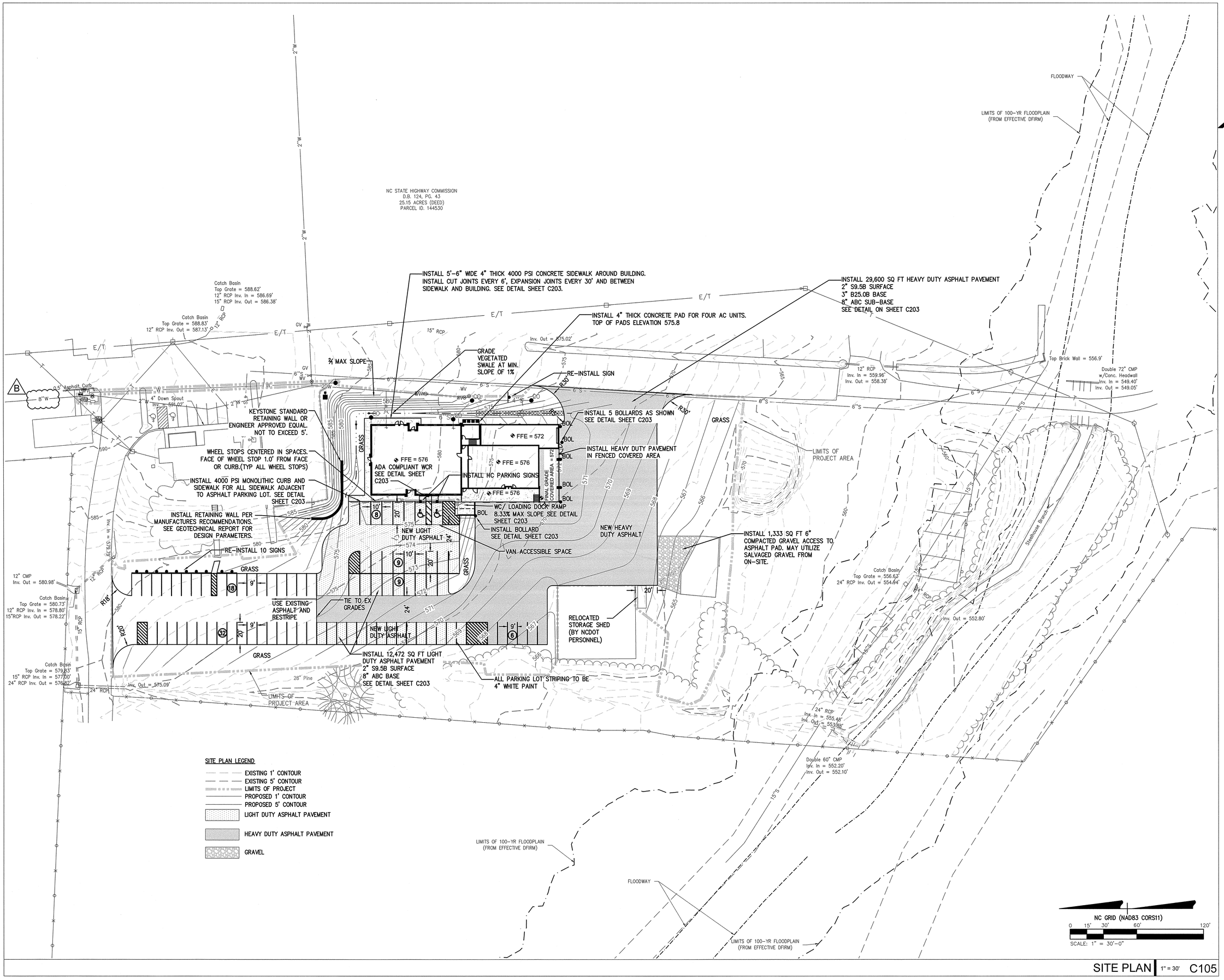

SITE PLAN | 1" = 30' | C105

adwarchitects
environments for life
architecture planning interiors
101 WEST WORTHINGTON AVENUE
CHARLOTTE, NORTH CAROLINA 28203
P704.379.1919
F704.379.1920
www.adwarchitects.com

Mattern & Craig
CONSULTING ENGINEERS • SURVEYORS
NC FIRM No. C-1154
12 BROAD STREET
ASHEVILLE, NORTH CAROLINA 28801
(828) 254-2201
FAX (828) 254-4562

NCDOT Division 7: Roadside Environmental & Bituminous Unit Support Facility

Alamance County
Graham, NC

Construction Documents
Submittal SCO
#13-10060-01A

SITE
PLAN

DATE: March 10, 2015
PROJECT NO: 13070 / 3453

REVISIONS:

NO:	DATE:	DESCRIPTION:
B	05.29.15	City of Graham Revisions

THIS DRAWING IS THE PROPERTY OF MATTERN & CRAIG AND SHALL NOT BE REPRODUCED OR COPIED IN WHOLE OR PART. IT SHALL NOT BE USED ON ANY OTHER PROJECT OR GIVEN TO ANY OTHER COMPANY OR AGENCY WITHOUT THE CONSENT OF MATTERN & CRAIG.

SEAL

SHEET NUMBER

C105

STORMWATER MANAGEMENT NOTES:
1. TOTAL AREA WITHIN PROJECT LIMITS = 2.50 AC
2. EXISTING IMPERVIOUS BUILT UPON AREA = 1.81 AC
3. PROPOSED IMPERVIOUS BUILT UPON AREA = 1.61 AC
4. THE POST CONSTRUCTION STORMWATER PROGRAM AND JORDAN LAKE RULES DO NOT APPLY TO YOUR PROJECT BECAUSE OF THE NET REDUCTION IN BUILT UPON AREA.
5. PRIMARY POST CONSTRUCTION STORMWATER TREATMENT IS UTILIZED BY THE REMOVAL OF EXISTING IMPERVIOUS AREAS AND THE IMPLEMENTATION OF VEGETATED GROUND COVER AND CONVEYANCES.

B

UNDERGROUND UTILITY LOCATION INDICATOR NOTES:
1. ALL UNDERGROUND LINES OUTSIDE BUILDING FOOTPRINT, EXCEPT LAWN IRRIGATION LINES, SHALL BE REQUIRED TO HAVE A WARNING TAPE INSTALLED IN THE BACKFILL BETWEEN 6 INCHES TO 24 INCHES BELOW FINISHED GRADE DIRECTLY OVER PIPING.
2. METALLIC LINES SHALL BE IDENTIFIED WITH DURABLE PRINTED PLASTIC WARNING TAPES, MINIMUM 3 INCHES WIDE WITH LETTERING TO IDENTIFY BURIED LINE BELOW.
3. NON-METALLIC PIPES, OTHER THAN GAS LINES, SHALL BE IDENTIFIED BY DETECTABLE WARNING TAPE, MINIMUM 2 INCHES WIDE, WITH LETTERING TO IDENTIFY BURIED LINE BELOW.

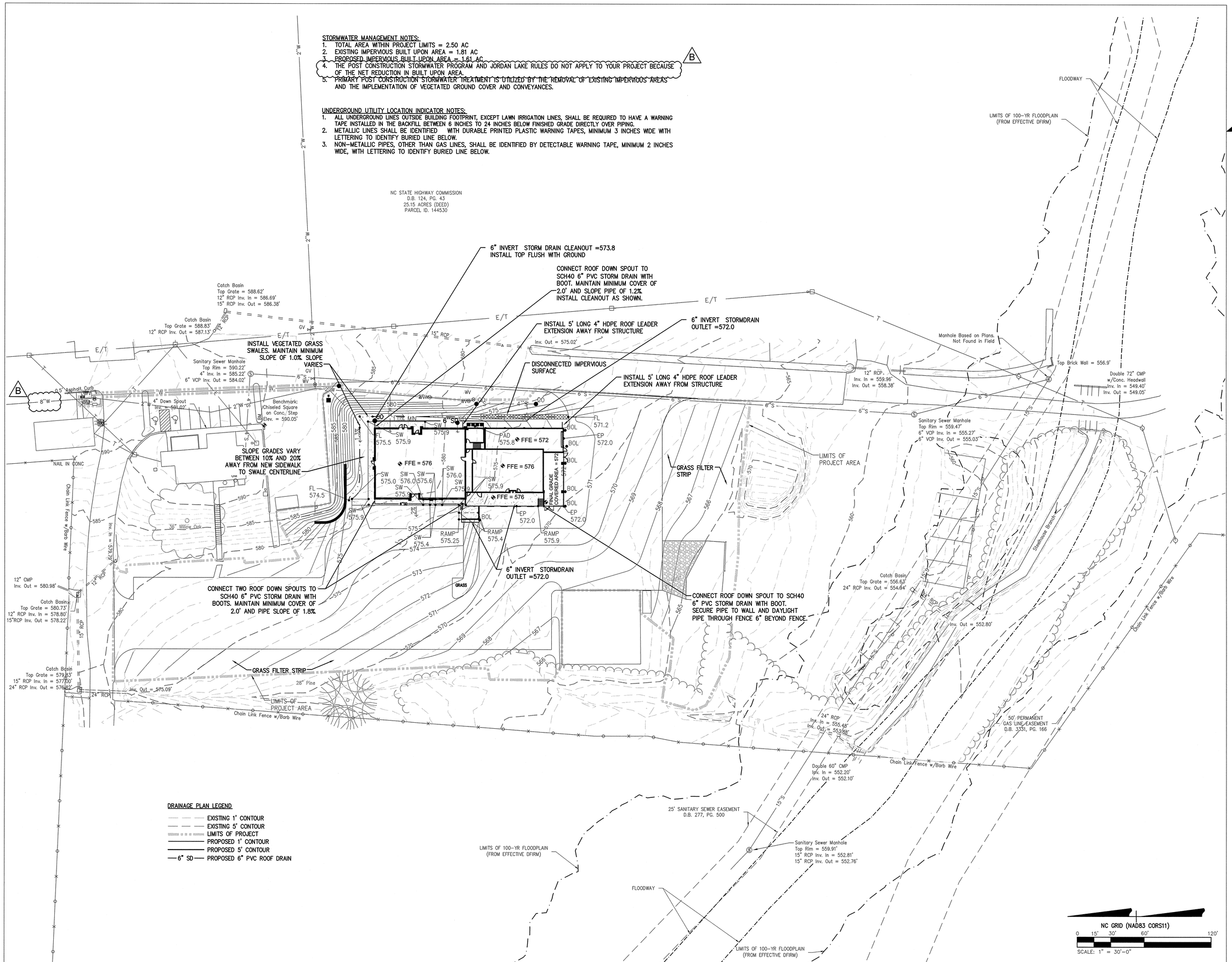

FINE GRADING, DRAINAGE, AND STORMWATER MANAGEMENT PLAN | 1" = 30' | C106

adwarchitects
environments for life
architecture planning interiors
101 WEST WORTHINGTON AVENUE
CHARLOTTE, NORTH CAROLINA 28203
P704.379.1919
F704.379.1920
www.adwarchitects.com

Mattern & Craig
CONSULTING ENGINEERS • SURVEYORS
NC FIRM No. C-1154
12 BROAD STREET
ASHEVILLE, NORTH CAROLINA 28801
(828) 254-2201
FAX (828) 254-4562

NCDOT Division 7: Roadside Environmental & Bituminous Unit Support Facility

Alamance County
Graham, NC

Construction Documents
Submittal SCO
#13-10060-01A

FINE GRADING, DRAINAGE, AND STORMWATER MANAGEMENT PLAN

DATE: March 10, 2015
PROJECT NO: 13070 / 3453

REVISIONS:

NO:	DATE:	DESCRIPTION:
B	05.29.15	City of Graham Revisions

THIS DRAWING IS THE PROPERTY OF MATTERN & CRAIG AND SHALL NOT BE REPRODUCED OR COPIED IN WHOLE OR PART. IT SHALL NOT BE USED ON ANY OTHER PROJECT OR GIVEN TO ANY OTHER COMPANY OR AGENCY WITHOUT THE CONSENT OF MATTERN & CRAIG.

SEAL

NORTH CAROLINA PROFESSIONAL SEAL 036306 ENGINEER MICHAEL S. HOLMWOOD

SHEET NUMBER

C106

NCDOT 2012 STANDARD DRAWINGS

1604.01 Railroad Erosion Control Detail
1605.01 Temporary Silt Fence
1606.01 Special Sediment Control Fence
1607.01 Gravel Construction Entrance
1622.01 Temporary Berms and Slope Drains
1630.01 Riser Basin
1630.02 Silt Basin Type B
1630.03 Temporary Silt Ditch
1630.04 Stilling Basin
1630.05 Temporary Diversion
1630.06 Special Stilling Basin
1631.01 Matting Installation
1632.01 Rock Inlet Sediment Trap Type A
1632.02 Rock Inlet Sediment Trap Type B
1632.03 Rock Inlet Sediment Trap Type C
1633.01 Temporary Rock Silt Check Type A
1633.02 Temporary Rock Silt Check Type B
1634.01 Temporary Rock Sediment Dam Type A
1634.02 Temporary Rock Sediment Dam Type B
1635.01 Rock Pipe Inlet Sediment Trap Type A
1635.02 Rock Pipe Inlet Sediment Trap Type B
1640.01 Coir Fiber Baffle
1645.01 Temporary Stream Crossing

CONTRACTOR SHALL FOLLOW NCDOT STANDARD DRAWINGS WHEN INSTALLING AND MAINTAINING EROSIONS CONTROL DEVICES

B

THE CONTRACTOR SHALL BECOME FAMILIAR WITH AND ABIDE BY THE NCDOT SPECIAL PROVISIONS LOCATED IN SECTION 312500 IN THE CONTRACT DOCUMENTS.

SKIMMER BASIN WITH BAFFLES DETAIL (EAST)

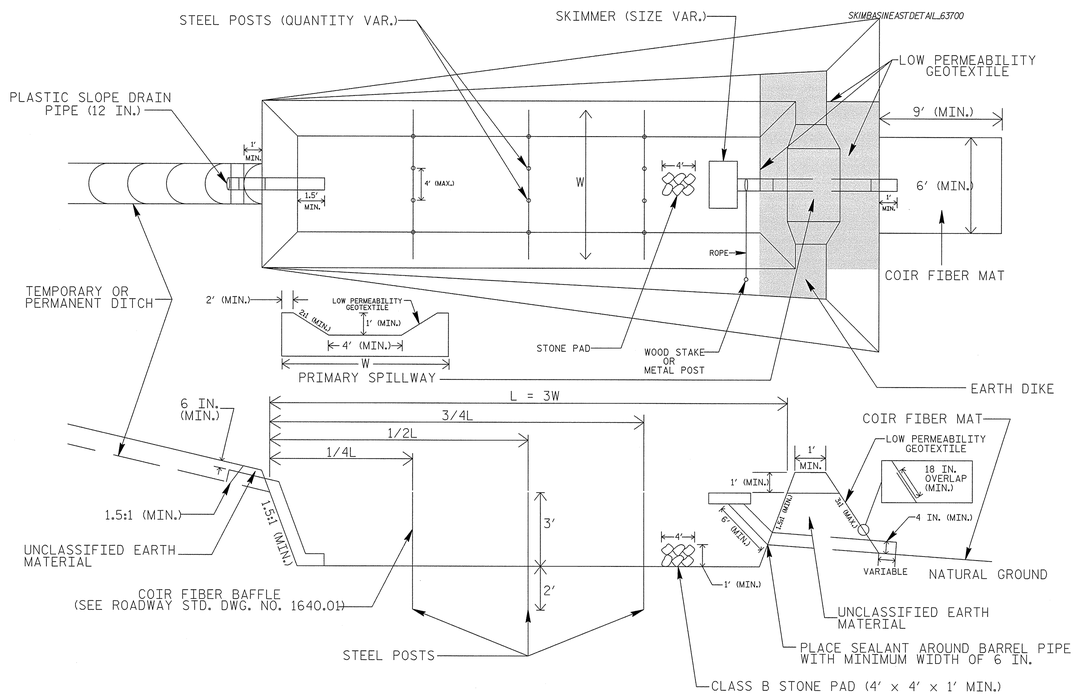

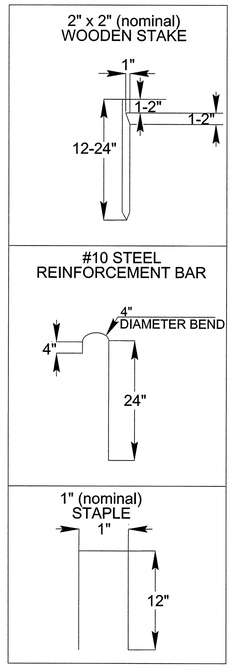

COIR FIBER MAT ANCHOR OPTIONS

NOTES
1. SEED AND PLACE MATTING FOR EROSION CONTROL ON INTERIOR AND EXTERIOR SIDESLOPES.
2. LIMIT EARTH DIKE HEIGHT TO 5 FT.
3. FOR BASIN DEPTH OF 3 FT., THE MINIMUM BASIN WIDTH SHALL BE 9 FT.
4. DETERMINE PRIMARY SPILLWAY WEIR LENGTH (FT.) USING Q/0.4, WHERE Q IS FLOW RATE (CFS) INTO BASIN.
5. PLASTIC SLOPE DRAIN PIPE AT INLET OF BASIN MAY BE REPLACED BY FILTRATION GEOTEXTILE OR TARP AS DIRECTED.
6. LOW PERMEABILITY GEOTEXTILE FOR PRIMARY SPILLWAY SHALL BE ONE CONTINUOUS PIECE OF MATERIAL OR OVERLAPPED 18 IN. (MIN.).

NOT TO SCALE

DIVISION OF HIGHWAYS
STATE OF NORTH CAROLINA

SOIL STABILIZATION TIMEFRAMES

SITE DESCRIPTION	STABILIZATION TIME	TIMEFRAME EXCEPTIONS
PERIMETER DIKES, SWALES, DITCHES AND SLOPES	7 DAYS	NONE
HIGH QUALITY WATER (HQW) ZONES	7 DAYS	NONE
SLOPES STEEPER THAN 3:1	7 DAYS	IF SLOPES ARE 10' OR LESS IN LENGTH AND ARE NOT STEEPER THAN 2:1, 14 DAYS ARE ALLOWED.
SLOPES 3:1 OR FLATTER	14 DAYS	7 DAYS FOR SLOPES GREATER THAN 50' IN LENGTH.
ALL OTHER AREAS WITH SLOPES FLATTER THAN 4:1	14 DAYS	NONE, EXCEPT FOR PERIMETERS AND HQW ZONES.

adwarchitects
environments for life
architecture planning interiors
101 WEST WORTHINGTON AVENUE
CHARLOTTE, NORTH CAROLINA 28203
P704.379.1919
F704.379.1920
www.adwarchitects.com

Mattern & Craig
CONSULTING ENGINEERS • SURVEYORS
NC FIRM No. C-1154
12 BROAD STREET
ASHEVILLE, NORTH CAROLINA 28801
(828) 254-2201
FAX (828) 254-4562

NCDOT Division 7: Roadside Environmental & Bituminous Unit Support Facility

Alamance County
Graham, NC

Construction Documents
Submittal SCO
#13-10060-01A

EROSION CONTROL DETAILS

DATE: March 10, 2015
PROJECT NO: 13070 / 3453

REVISIONS:

NO:	DATE:	DESCRIPTION:
B	5.29.15	City of Graham Revisions

THIS DRAWING IS THE PROPERTY OF MATTERN & CRAIG AND SHALL NOT BE REPRODUCED OR COPIED IN WHOLE OR PART. IT SHALL NOT BE USED ON ANY OTHER PROJECT OR GIVEN TO ANY OTHER COMPANY OR AGENCY WITHOUT THE CONSENT OF MATTERN & CRAIG.

SEAL

SHEET NUMBER

C201

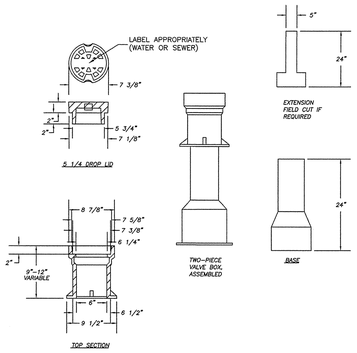

NOTES:

VALVE BOX WILL CONFORM TO ASTM A 48 CLASS 35

CAST IRON VALVE BOX ACCOMMODATES 4" THROUGH 12" VALVES 5 1/4-INCH SHAFTS, SLIP-TYPE

CITY OF GRAHAM	DWG NO.	REV.
CAST IRON VALVE BOX	T:DETAILS/GRAHAM DETAILS/2015 DETAILS/WATER	2/1/15

W-3

APPROVED DEVICES

A. RPZ
1. WILKINS 475 DARR OR 375 ADA W/ REMOTE READOUT (GAL)
2. FEBCO SERIES 826YD DETECTOR WITH REMOTE READER (GAL.)

B. DDC
1. FEBCO 876V WITH REMOTE READER (GAL.)
2. WILKINS MODEL 350 ADA WITH REMOTE READOUT (GAL)

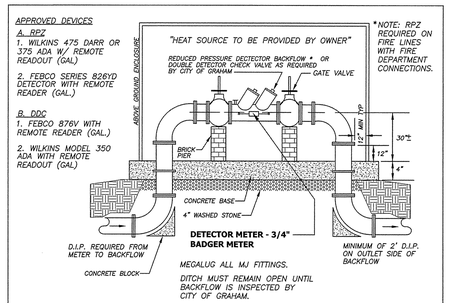

*NOTE: RPZ REQUIRED ON FIRE LINES WITH FIRE DEPARTMENT CONNECTIONS.

MEGALUG ALL MJ FITTINGS.

DITCH MUST REMAIN OPEN UNTIL BACKFLOW IS INSPECTED BY CITY OF GRAHAM.

NOTES

1. THE BACKFLOW DEVICE SHALL BE WITHIN 10' OF AND ON THE PROPERTY SIDE OF THE METER. ENCLOSURE SHALL NOT OBSTRUCT SITE DISTANCE AT ROAD CROSSINGS.
2. ALL BACKFLOW DEVICES SHALL BE INSTALLED ABOVE GROUND IN A HORIZONTAL POSITION UNLESS OTHERWISE PREAPPROVED BY THE CITY OF GRAHAM.
3. SHUT OFF VALVES SHALL BE RESILIENT SEAT WITH FLANGED END AND O.S.&Y HAND WHEELS.
4. ALL INTERIOR AND EXTERIOR IRON SURFACES SHALL HAVE EXPOXY COATINGS TO CONFORM TO ANSI/AWWA C550 OR MANUFACTURED OF STAINLESS STEEL.
5. APPROVED ABOVE GROUND ENCLOSURES: "HOT BOX", HYDROCOWL, SMI MODEL #b68-EHPZD, B80-EHPZD, B110-EHPZD) OR BFP (#640-1PD, 800-1PD, 950-APD OR 1150-APD). ENCLOSURE MUST HAVE A DRAIN.
6. TANDEM BACKFLOWS REQUIRED IF SERVING MULTIPLE USERS OR SERVICE CANNOT BE INTERRUPTED.
7. DETECTOR METER AND BACKFLOW ASSEMBLY SHALL BE INSTALLED IN ENCLOSURE.
8. PIPE & FITTINGS BELOW GRADE TO BE M.J. WITH RETAINER GLANDS, 150 PSI MIN. WORKING PRESSURE.
9. INSTALL BACKFLOW DEVICE NEAR MAIN WATERLINE CONNECTION AT STREET RIGHT OF WAY.
10. ALL BACKFLOW DEVICES SHALL BE TESTED, INSPECTED, AND MAINTAINED BY THE OWNER. PROVIDE ANNUAL REPORTS TO CITY.

CITY OF GRAHAM	DWG NO.	REV.
ABOVE GRADE BACKFLOW PREVENTER, 3" AND GREATER	T:DETAILS/GRAHAM DETAILS/2015 DETAILS/WATER	2/1/15

W-7

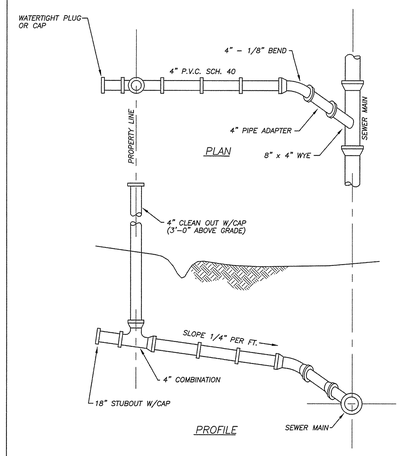

NOTE: PLUMBER TO CONNECT TO STUB-OUT AND LOWER CLEAN-OUT CAP TO GROUND LEVEL

CITY OF GRAHAM	DWG NO.	REV.
STANDARD SEWER SERVICE CONNECTION	T:DETAILS/GRAHAM DETAILS/2015 DETAILS/SEWER	2/1/15

SS-10

CITY OF GRAHAM	DWG NO.	REV.
FIRE HYDRANT INSTALLATION	T:DETAILS/GRAHAM DETAILS/2015 DETAILS/WATER	2/1/15

W-2

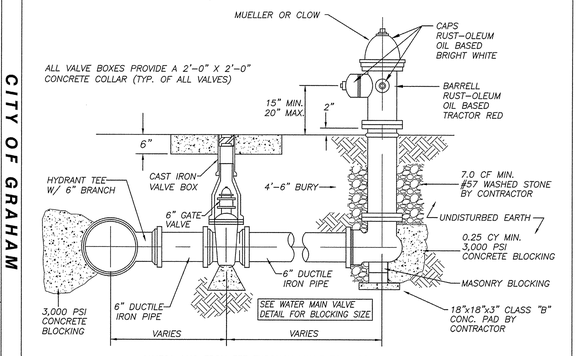

**MEGA-LUG FROM TEE THROUGH VALVE TO HYDRANT

FIRE HYDRANTS SHALL HAVE A 5 1/4" MAIN VALVE OPENING.

ALL IN-LINE GATE & HYDRANT VALVES ARE TO BE MUELLER, AMERICAN DARLING, OR APPROVED EQUAL.

CITY OF GRAHAM	DWG NO.	REV.
2" SPRINKLER CONNECTION WITH 2" T-10 METER AND RPZ BACKFLOW ASSEMBLY	T:DETAILS/GRAHAM DETAILS/2015 DETAILS/WATER	2/1/15

W-19

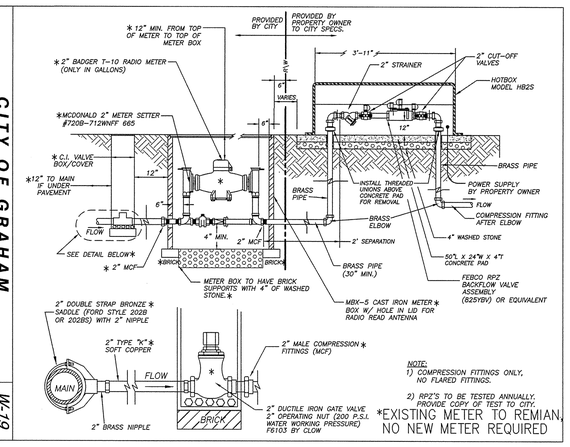

C

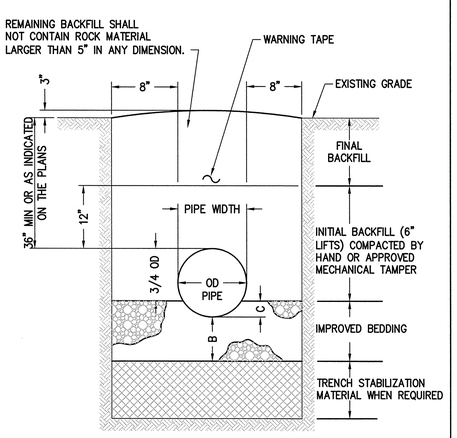

DIMENSION "B"
4" TYPICAL
6" IF ROCK IN BOTTOM OF TRENCH SEE SPECIFICATIONS

DIMENSION "C"
1/4 OD

TRENCH INSTALLATION FOR PRESSURE PIPE (NOT BEDDED)

NOT TO SCALE

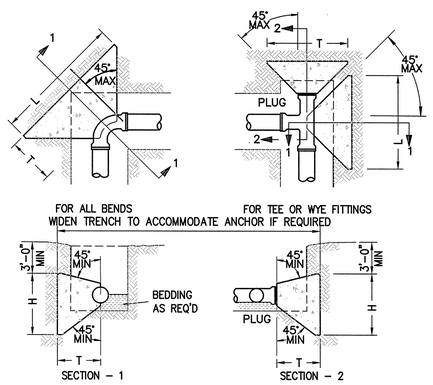

PIPE SIZE	DEGREE OF BEND	BEND DIMENSIONS (FEET)			VOL. CU.YD.	TEE AND PLUGS (FEET)			VOL. CU.YD.
		L	H	T		L	H	T	
4" & 6"	90 45 22 1/2 11 1/4	2.50 2.00 1.50 1.50	2.50 2.25 2.00 2.00	3.01 2.60 2.52 2.50	0.24 0.15 0.10 0.10	2.00	2.25	2.50	0.15
8"	90 45 22 1/2 11 1/4	3.66 2.66 1.66 1.66	3.16 2.66 2.16 2.16	3.21 2.77 2.69 2.67	0.48 0.26 0.13 0.13	3.16	2.91	2.66	0.32
10" & 12"	90 45 22 1/2 11 1/4	4.83 3.33 2.33 1.83	3.83 3.58 2.58 2.33	3.42 2.95 2.86 2.84	0.82 0.43 0.24 0.18	3.83	4.00	2.83	0.52
14"	90 45 22 1/2 11 1/4	5.83 4.00 3.16 2.00	4.00 4.00 4.00 3.33	3.63 3.11 3.03 3.01	1.10 0.65 0.50 0.26	4.00	4.5	3.00	0.70

1. THRUST BLOCKS ARE REQUIRED WHENEVER THE PIPELINE: CHANGES DIRECTION, CHANGES SIZE, DEAD ENDS AND AT VALUES.
2. USE 3000 P.S.I. CONCRETE
3. NO CONCRETE SHALL BE POURED ON ANY PART OF THE JOINT.
4. TAR PAPER OR PLASTIC SHALL BE PLACED AROUND END OF WATER MAIN AND AROUND VALVES WHERE CONCRETE ANCHOR BLOCK IS POURED.

MC W-7A THRUST BLOCK DETAIL

NOT TO SCALE

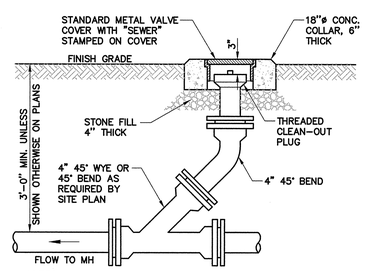

NOTES:

1. CLEAN-OUT PIPE AND FITTINGS SHALL BE THE SAME DIAMETER AND MATERIAL AS THE SERVICE LATERAL.
2. PROVIDE CLEAN-OUTS WHERE INDICATED ON THE PLANS.
3. D.I.P. CLEAN-OUTS SHALL HAVE BRONZE-THREADED CLEAN-OUT PLUG.
4. WHERE CLEAN-OUTS ARE INSTALLED ON PIPING UNDER PRESSURE, ALL JOINTS SHALL HAVE RETAINER GLANDS OR OTHER APPROVED METHOD OF RESTRAINT. ALL RISER PIPE, FITTINGS AND CLEAN-OUT PLUG SHALL BE WATERTIGHT AND RATED FOR THE PRESSURES PRESENT AT THE PARTICULAR POINT OF INSTALLATION.

SANITARY SEWER SERVICE LATERAL CLEAN-OUT

NOT TO SCALE

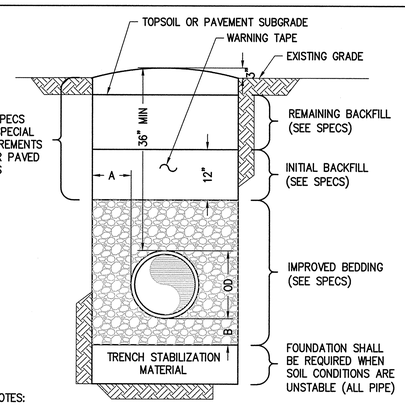

NOTES:

THE MAXIMUM TRENCH WIDTH (OD+2A) SHALL BE MEASURED FROM THE PIPE INVERT TO ONE FOOT ABOVE THE TOP OF PIPE.

DIMENSION "A" SHALL BE 12" WHEN TRENCH IS 10 FEET OR LESS DEEP FROM INVERT OF PIPE, AND 18" WHEN TRENCH IS GREATER THAN 10 FEET DEEP.

DIMENSION "B" 4" TYPICAL OR 6" IF ROCK IN BOTTOM OF TRENCH SEE SPECIFICATIONS.

TRENCH DETAILS FOR GRAVITY PIPES

NOT TO SCALE

UNDERGROUND UTILITY LOCATION INDICATOR NOTES:

1. ALL UNDERGROUND LINES OUTSIDE BUILDING FOOTPRINT, EXCEPT LAWN IRRIGATION LINES, SHALL BE REQUIRED TO HAVE A WARNING TAPE INSTALLED IN THE BACKFILL BETWEEN 6 INCHES TO 24 INCHES BELOW FINISHED GRADE DIRECTLY OVER PIPING.
2. METALLIC LINES SHALL BE IDENTIFIED WITH DURABLE PRINTED PLASTIC WARNING TAPES, MINIMUM 3 INCHES WIDE WITH LETTERING TO IDENTIFY BURIED LINE BELOW.
3. NON-METALLIC PIPES, OTHER THAN GAS LINES, SHALL BE IDENTIFIED BY DETECTABLE WARNING TAPE, MINIMUM 2 INCHES WIDE, WITH LETTERING TO IDENTIFY BURIED LINE BELOW.

adwarchitects
environments for life
architecture planning interiors
101 WEST WORTHINGTON AVENUE
CHARLOTTE, NORTH CAROLINA 28203
P704.379.1919
F704.379.1920
www.adwarchitects.com

Mattern & Craig
CONSULTING ENGINEERS • SURVEYORS
NC FIRM No. C-1154
12 BROAD STREET
ASHEVILLE, NORTH CAROLINA 28801
(828) 254-2201
FAX (828) 254-4562

NCDOT Division 7: Roadside Environmental & Bituminous Unit Support Facility

Alamance County
Graham, NC

Construction Documents
Submittal SCO
#13-10060-01A

UTILITY DETAILS

DATE: March 10, 2015
PROJECT NO: 13070 / 3453

REVISIONS:

NO:	DATE:	DESCRIPTION:
B	5.29.15	City of Graham Revisions
C	07.09.15	City of Graham Revisions 2

THIS DRAWING IS THE PROPERTY OF MATTERN & CRAIG AND SHALL NOT BE REPRODUCED OR COPIED IN WHOLE OR PART. IT SHALL NOT BE USED ON ANY OTHER PROJECT OR GIVEN TO ANY OTHER COMPANY OR AGENCY WITHOUT THE CONSENT OF MATTERN & CRAIG.

NOT FOR CONSTRUCTION

SEAL

SHEET NUMBER

C202

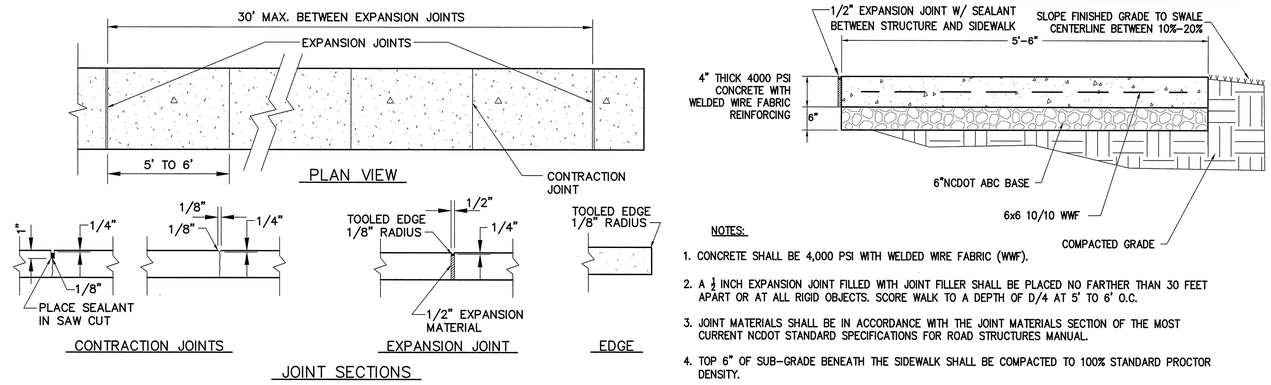

NOTES:

1. CONCRETE SHALL BE 4,000 PSI WITH WELDED WIRE FABRIC (WWF).
2. A ½ INCH EXPANSION JOINT FILLED WITH JOINT FILLER SHALL BE PLACED NO FARTHER THAN 30 FEET APART OR AT ALL RIGID OBJECTS. SCORE WALK TO A DEPTH OF D/4 AT 5' TO 6' O.C.
3. JOINT MATERIALS SHALL BE IN ACCORDANCE WITH THE JOINT MATERIALS SECTION OF THE MOST CURRENT NCDOT STANDARD SPECIFICATIONS FOR ROAD STRUCTURES MANUAL.
4. TOP 6" OF SUB-GRADE BENEATH THE SIDEWALK SHALL BE COMPACTED TO 100% STANDARD PROCTOR DENSITY.
5. SIDEWALK WITHOUT CURB TO BE INSTALLED FOR ALL SIDEWALK NOT ADJACENT TO ASPHALT PARKING AREA.

CONCRETE SIDEWALK WITHOUT MONOLITHIC CURB

NOT TO SCALE

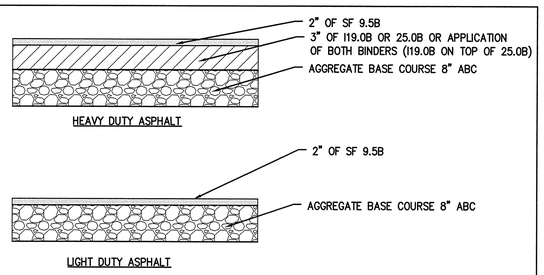

PAVEMENT TYPICAL SECTIONS

NOT TO SCALE

REFERENCE GEOTECHNICAL REPORT FOR FINAL RECOMMENDATIONS

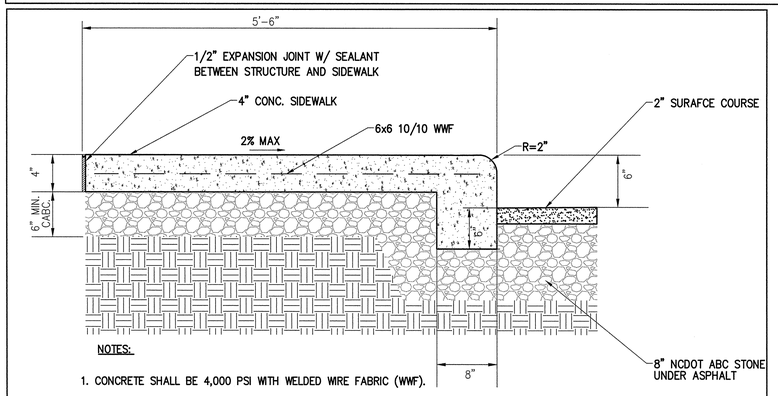

NOTES:

1. CONCRETE SHALL BE 4,000 PSI WITH WELDED WIRE FABRIC (WWF).
2. A ½ INCH EXPANSION JOINT FILLED WITH JOINT FILLER SHALL BE PLACED NO FARTHER THAN 30 FEET APART OR AT ALL RIGID OBJECTS. SCORE WALK TO A DEPTH OF D/4 AT 5' TO 6' O.C.
3. JOINT MATERIALS SHALL BE IN ACCORDANCE WITH THE JOINT MATERIALS SECTION OF THE MOST CURRENT NCDOT STANDARD SPECIFICATIONS FOR ROAD STRUCTURES MANUAL.
4. TOP 6" OF SUB-GRADE BENEATH THE SIDEWALK AND CURB SHALL BE COMPACTED TO 100% STANDARD PROCTOR DENSITY.
5. MONOLITHIC CURB AND SIDEWALK TO BE INSTALLED FOR ALL SIDEWALK ADJACENT TO ASPHALT PARKING AREA.

MONOLITHIC CURB AND SIDEWALK DETAIL

SCALE: NOT TO SCALE

NOTES:

1. CONCRETE SHALL BE 6" MINIMUM THICKNESS 4,000 PSI WITH ADDITIONAL 8" WIDE 8" DEEP TURNDOWN WHERE RAMP MEETS ASPHALT WITH WELDED WIRE FABRIC (WWF) CENTERED IN CONCRETE.
2. A ½ INCH EXPANSION JOINT FILLED WITH JOINT FILLER SHALL BE PLACED AT ALL RIGID OBJECTS. SCORE RAMP TO A DEPTH OF D/4 AT 5' TO 6' O.C.
3. JOINT MATERIALS SHALL BE IN ACCORDANCE WITH THE JOINT MATERIALS SECTION OF THE MOST CURRENT NCDOT STANDARD SPECIFICATIONS FOR ROAD STRUCTURES MANUAL.
4. TOP 6" OF SUB-GRADE BENEATH THE RAMP SHALL BE COMPACTED TO 100% STANDARD PROCTOR DENSITY.

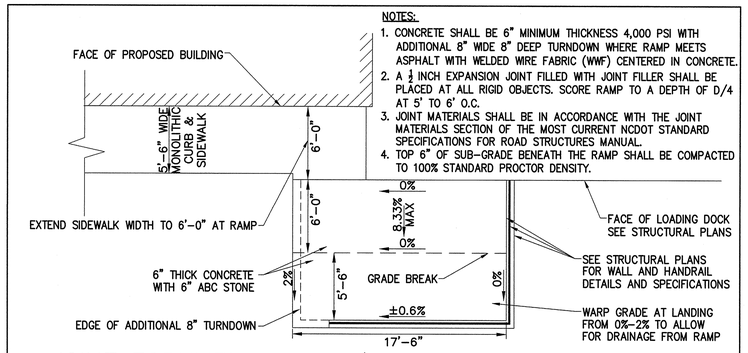

JOINT FORKLIFT ACCESS/ WHEEL CHAIR RAMP DETAIL

NOT TO SCALE

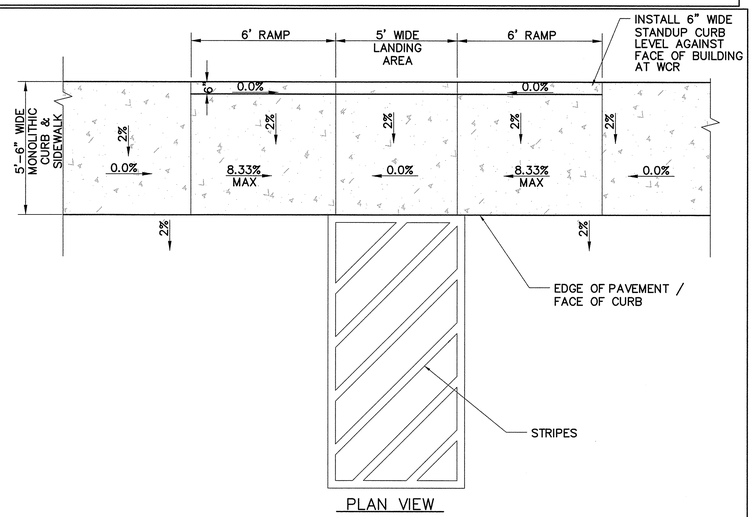

WHEELCHAIR RAMP

NOT TO SCALE

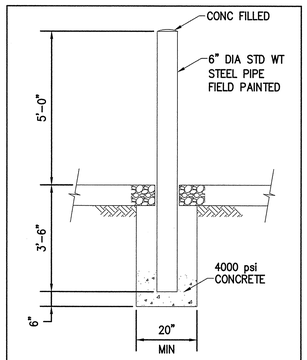

BOLLARD

SCALE: NOT TO SCALE

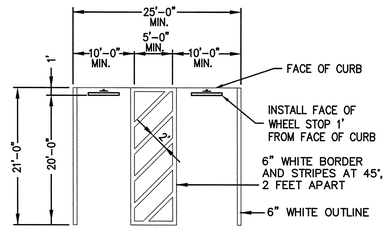

NOTES:

1. HANDICAP SIGNS SHALL BE LOCATED BEHIND WHEEL STOP, CENTERED IN FRONT OF EACH HANDICAPPED PARKING SPACE.
2. DIMENSIONS SHOWN ARE MINIMUM WHERE INDICATED. REFER TO SITE PLAN FOR ACTUAL DIMENSIONS.

STANDARD ACCESSIBLE PARKING DETAILS

NOT TO SCALE

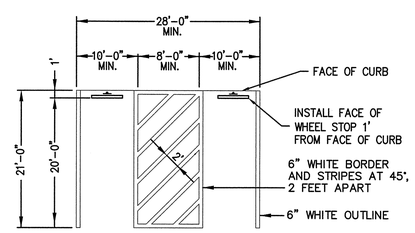

NOTES:

1. HANDICAP SIGNS SHALL BE LOCATED BEHIND WHEEL STOP, CENTERED IN FRONT OF EACH HANDICAPPED PARKING SPACE.
2. DIMENSIONS SHOWN ARE MINIMUM WHERE INDICATED. REFER TO SITE PLAN FOR ACTUAL DIMENSIONS.

VAN ACCESSIBLE PARKING DETAILS

NOT TO SCALE

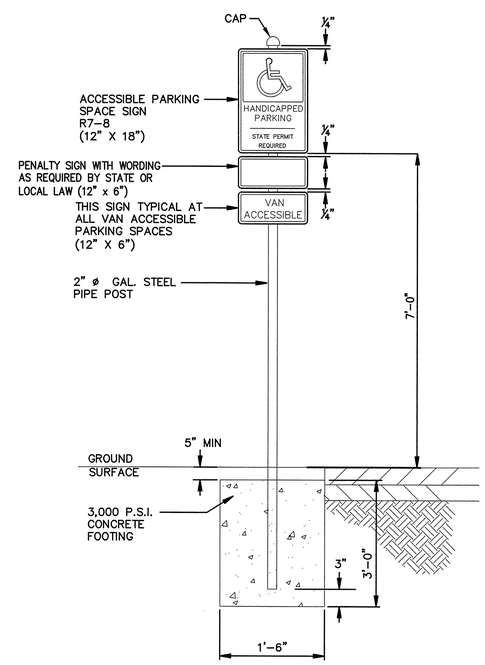

ACCESSIBLE PARKING SIGN

NO SCALE

HANDICAP PARKING DETAIL

SCALE: NOT TO SCALE

adwarchitects
environments for life
architecture planning interiors
101 WEST WORTHINGTON AVENUE
CHARLOTTE, NORTH CAROLINA 28203
P704.379.1919
F704.379.1920
www.adwarchitects.com

Mattern & Craig
CONSULTING ENGINEERS • SURVEYORS
NC FIRM No. C-1154
12 BROAD STREET
ASHEVILLE, NORTH CAROLINA 28801
(828) 254-2201
FAX (828) 254-4562

NCDOT Division 7: Roadside Environmental & Bituminous Unit Support Facility

Alamance County
Graham, NC

Construction Documents
Submittal SCO
#13-10060-01A

SITE DETAILS

DATE: March 10, 2015
PROJECT NO: 13070 / 3453

REVISIONS:

NO: DATE: DESCRIPTION:

THIS DRAWING IS THE PROPERTY OF MATTERN & CRAIG AND SHALL NOT BE REPRODUCED OR COPIED IN WHOLE OR PART. IT SHALL NOT BE USED ON ANY OTHER PROJECT OR GIVEN TO ANY OTHER COMPANY OR AGENCY WITHOUT THE CONSENT OF MATTERN & CRAIG.

SEAL

SHEET NUMBER

C203

GENERAL SHEET NOTES

1. ALL ARCHITECTURAL COMPONENTS ARE TO BE ATTACHED AS REQUIRED BY ASCE 7-05 CHAPTER 13 SEISMIC DESIGN FOR NONSTRUCTURAL COMPONENTS. EACH INDIVIDUAL CONTRACTOR RESPONSIBLE FOR THE COMPONENT MUST PROVIDE PROJECT SPECIFIC DEIGN AND DOCUMENTATION PREPARED BY A LICENSED ENGINEER. CHAPTER 13 DEFINES THE FORCE REQUIRED TO SUPPORT THE COMPONENT FOR THE ANCHORAGE AND BRACING. THE COST OF PREPARING THIS INFORMATION AND DESIGN SHALL BE INCLUDED IN EACH CONTRACTOR'S BID PROVIDING THE COMPONENT.
2. FIELD VERIFY ALL CONDITIONS. GENERAL CONTRACTOR MUST NOTIFY ARCHITECT OF ANY DISCREPANCIES PRIOR TO START OF WORK AFFECTED BY SUCH DISCREPANCY.
3. DO NOT SCALE DRAWINGS. IF DIMENSIONS ARE IN QUESTION, OBTAIN CLARIFICATION FROM ARCHITECT.
4. PROVIDE ADDITIONAL BLOCKING WITHIN STUD WALLS AS REQUIRED FOR SUPPORT OF CABINETS, SHELVING, WALL STOPS, COUNTERTOPS, MARKERBOARDS, TACKBOARDS, AV EQUIPMENT AND SIMILAR.
5. PLACE CONTROL JOINTS IN SIDEWALK AND PAVING PER MINIMUM REQUIREMENTS STATED IN CIVIL DOCUMENTS. GENEREAL LAYOUT TO BE COORDINATED BY G.C.
6. ALL INTERIOR DIMENSIONS ARE TO PARTITION/WALL FACE U.N.O.
7. PROVIDE CONTROL JOINTS AT INTERIOR MASONRY WALLS AT 20'-0" O.C. MINIMUM.

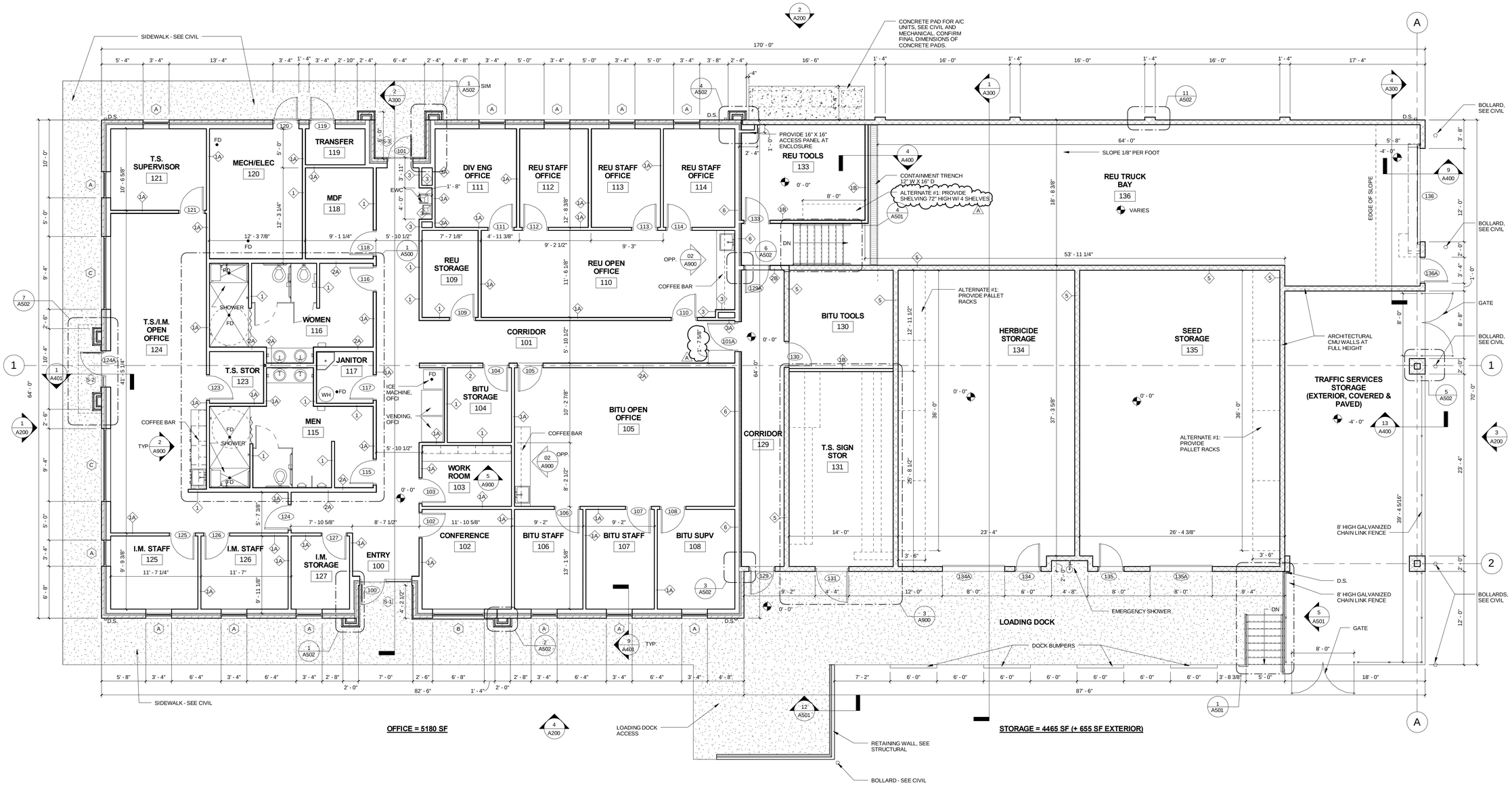

OFFICE = 5180 SF

STORAGE = 4465 SF (+ 655 SF EXTERIOR)

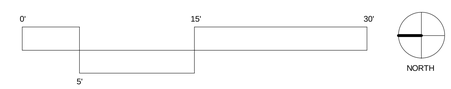

FIRST FLOOR PLAN | 3/16" = 1'-0" | 01

adwarchitects
environments for life
architecture planning interiors
101 WEST WORTHINGTON AVENUE
CHARLOTTE, NORTH CAROLINA 28203
P704.379.1919
F704.379.1920
www.adwarchitects.com

NCDOT Division 7: Roadside Environmental & Bituminous Unit Support Facility

Alamance County
Graham, NC

Construction Documents
Submittal SCO
#13-10060-01A

FIRST FLOOR PLAN

DATE: May 08, 2015
PROJECT NO: 13070

REVISIONS

NO:	DATE:	DESCRIPTION:
A	05.08.15	SCO Review Comments

THIS DRAWING IS THE PROPERTY OF ADW ARCHITECTS, P.A. AND SHALL NOT BE REPRODUCED OR COPIED IN WHOLE OR PART . IT SHALL NOT BE USED ON ANY OTHER PROJECT OR GIVEN TO ANY OTHER COMPANY OR AGENCY WITHOUT THE CONSENT IF ADW ARCHITECTS, P.A.

SEAL

JAMES GILMORE POWELL
REGISTERED ARCHITECT
5454
CHARLOTTE, N.C.
05.08.15

SHEET NUMBER

A101

ROOF VENTILATION CALCULATIONS

PER NCSBC 1203.2 ATTIC SPACES: THE NET FREE VENTILATING AREA SHALL NOT BE LESS THAN 1/300 OF THE AREA OF THE SPACE VENTILATED, WITH 50% OF THE REQUIRED VENTILATING AREA PROVIDED BY VENTILATORS LOCATED IN THE UPPER PORTION OF THE SPACE TO BE VENTILATED AT LEAST 3 FEET ABOVE EAVE OR CORNICE VENTS WITH THE BALANCE OF THE REQUIRED VENTILATION PROVIDED BY EAVE OR CORNICE VENTS.

ROOF AREA "A" : 2836 SF

TOTAL VENTILATION REQUIRED: 2836 SF/300 = 9.5 SF
4.75 SF - SOFFIT VENTILATION
4.75 SF - RIDGE VENTILATION

SOFFIT VENTILATION PROVIDED: 141 SF @ 6% OPEN = 8.5 SF

RIDGE VENTILATION PROVIDED: 34.5 LF @ 20 SQ IN PER LF = 4.8 SF

ROOF AREA "B" : 2773 SF

TOTAL VENTILATION REQUIRED: 2773 SF/300 = 9.25 SF
4.625 SF - SOFFIT VENTILATION
4.625 SF - RIDGE VENTILATION

SOFFIT VENTILATION PROVIDED: 134 SF @ 6% OPEN = 8 SF

RIDGE VENTILATION PROVIDED: 33.5 LF @ 20 SQ IN PER LF = 4.7 SF

ROOF AREA "C" : 2992 SF

TOTAL VENTILATION REQUIRED: 2992 SF/300 = 10 SF
5 SF - SOFFIT VENTILATION
5 SF - RIDGE VENTILATION

SOFFIT VENTILATION PROVIDED: 176 SF @ 6% OPEN = 10.5 SF

RIDGE VENTILATION PROVIDED: 36 LF @ 20 SQ IN PER LF = 5 SF

ROOF AREA "D" : 2992 SF

TOTAL VENTILATION REQUIRED: 2992 SF/300 = 10 SF
5 SF - SOFFIT VENTILATION
5 SF - RIDGE VENTILATION

SOFFIT VENTILATION PROVIDED: 176 SF @ 6% OPEN = 10.5 SF

RIDGE VENTILATION PROVIDED: 36 LF @ 20 SQ IN PER LF = 5 SF

ROOF VENTILATION CALCULATIONS 12" = 1'-0"

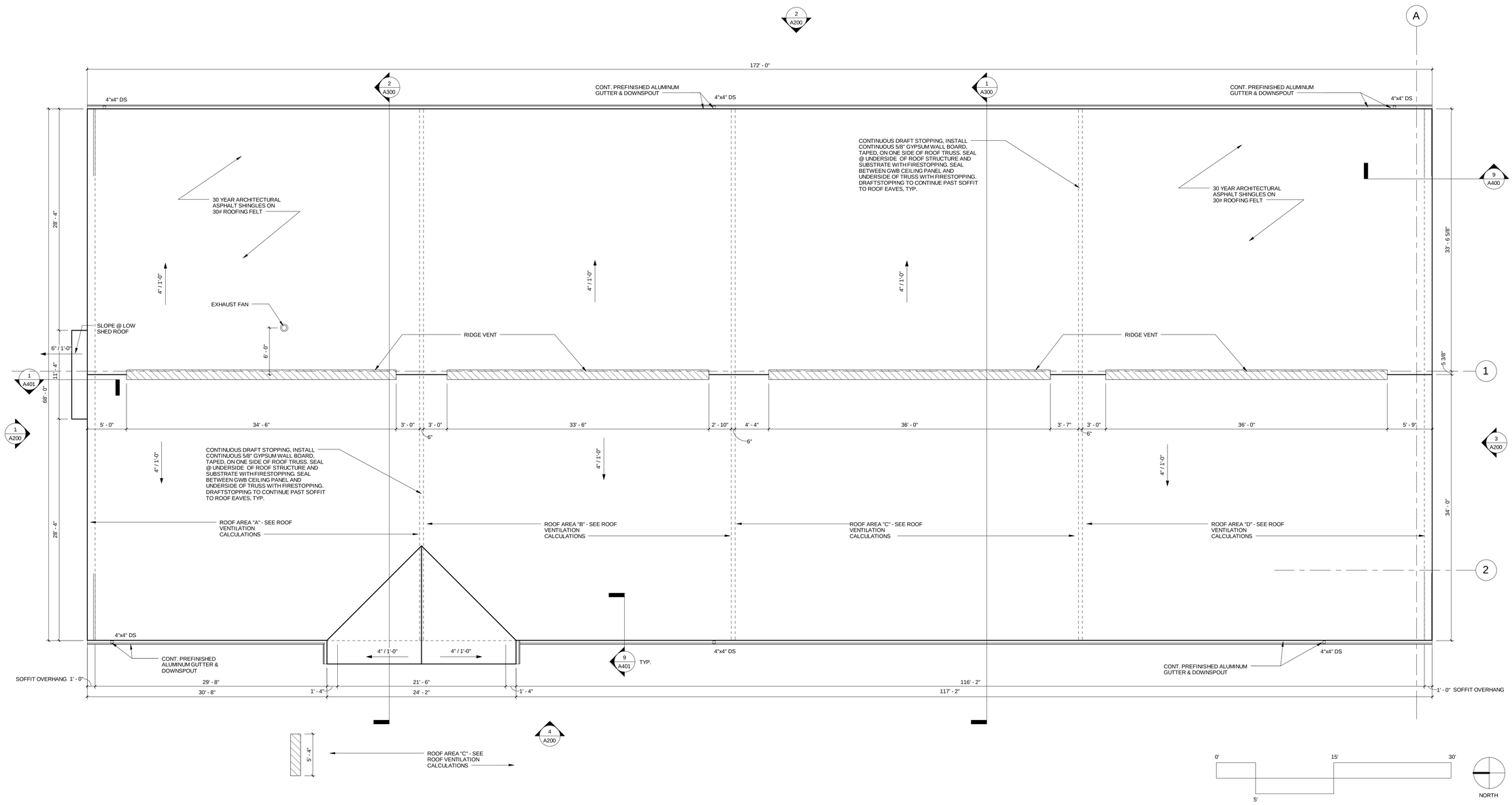

ROOF PLAN 3/16" = 1'-0" 1

adwarchitects
environments for life
architecture planning interiors
101 WEST WORTHINGTON AVENUE
CHARLOTTE, NORTH CAROLINA 28203
P704.379.1919
F704.379.1920
www.adwarchitects.com

NCDOT Division 7: Roadside Environmental & Bituminous Unit Support Facility

Alamance County
Graham, NC

Construction Documents
Submittal SCO
#13-10060-01A

ROOF PLAN

DATE: May 08, 2015
PROJECT NO: 13070

REVISIONS
NO: DATE: DESCRIPTION:

THIS DRAWING IS THE PROPERTY OF ADW ARCHITECTS, PA. AND SHALL NOT BE REPRODUCED OR COPIED IN WHOLE OR PART. IT SHALL NOT BE USED ON ANY OTHER PROJECT OR GIVEN TO ANY OTHER COMPANY OR AGENCY WITHOUT THE CONSENT IF ADW ARCHITECTS, PA.

SEAL

SHEET NUMBER

A110

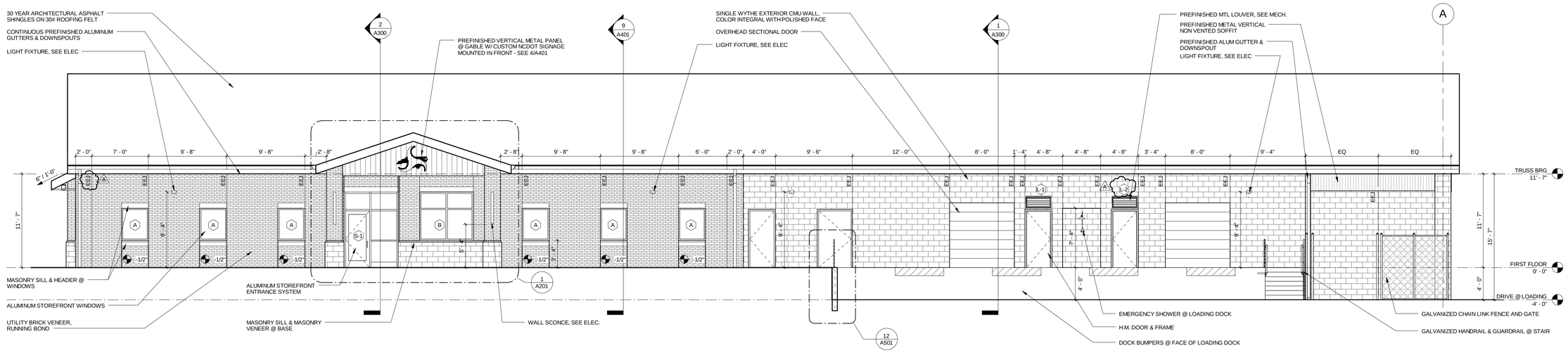

WEST ELEVATION 3/16" = 1'-0" 4

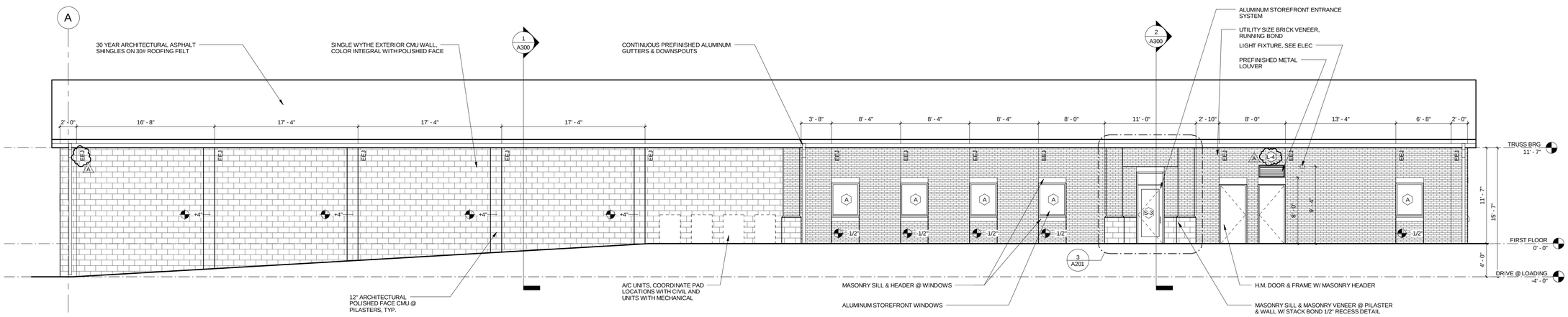

EAST ELEVATION 3/16" = 1'-0" 2

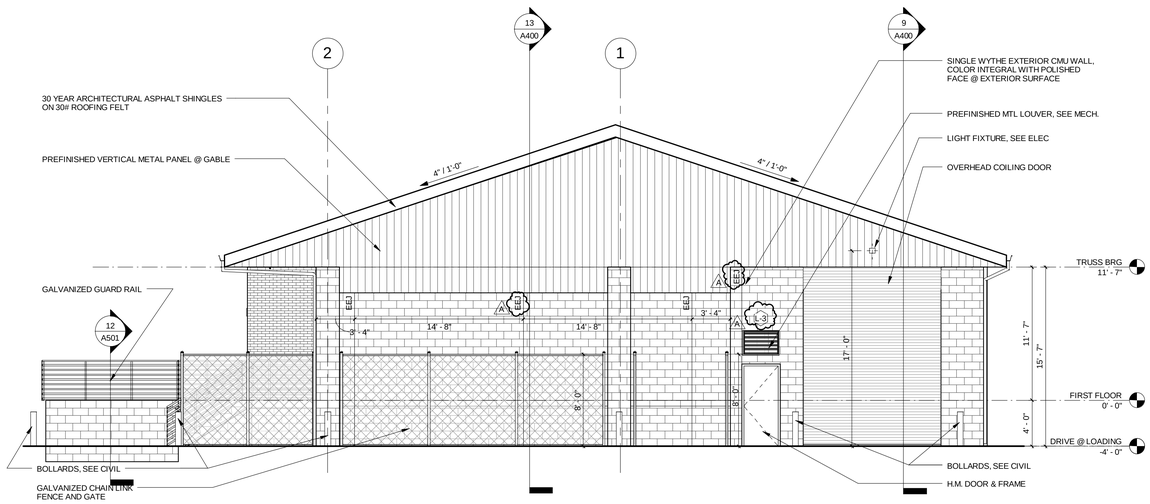

SOUTH ELEVATION 3/16" = 1'-0" 3

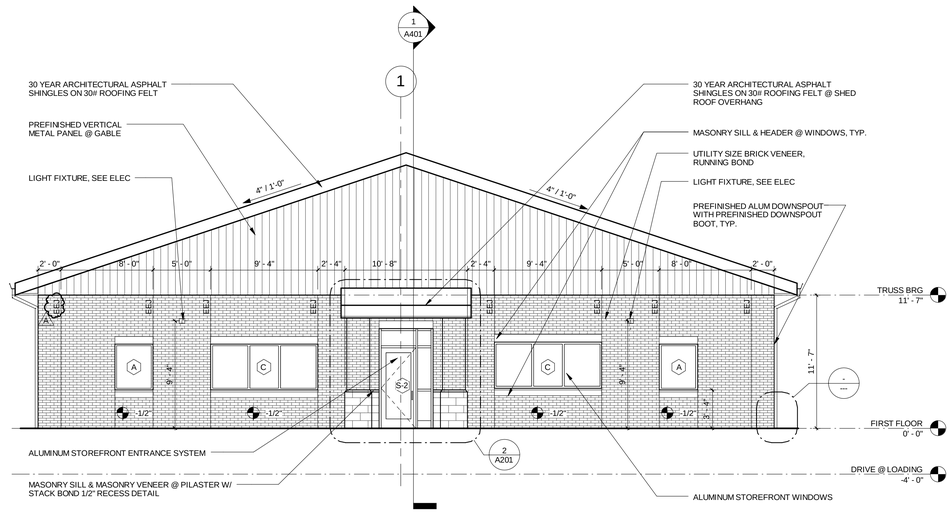

NORTH ELEVATION 3/16" = 1'-0" 1

adwarchitects
environments for life
architecture planning interiors
101 WEST WORTHINGTON AVENUE
CHARLOTTE, NORTH CAROLINA 28203
P704.379.1919
F704.379.1920
www.adwarchitects.com

NCDOT Division 7: Roadside Environmental & Bituminous Unit Support Facility

Alamance County
Graham, NC

Construction Documents
Submittal SCO
#13-10060-01A

EXTERIOR ELEVATIONS

DATE: May 08, 2015
PROJECT NO: 13070

REVISIONS

NO:	DATE:	DESCRIPTION:
A	05.08.15	SCO Review Comments

THIS DRAWING IS THE PROPERTY OF ADW ARCHITECTS, PA. AND SHALL NOT BE REPRODUCED OR COPIED IN WHOLE OR PART. IT SHALL NOT BE USED ON ANY OTHER PROJECT OR GIVEN TO ANY OTHER COMPANY OR AGENCY WITHOUT THE CONSENT IF ADW ARCHITECTS, PA.

SEAL

SHEET NUMBER

A200

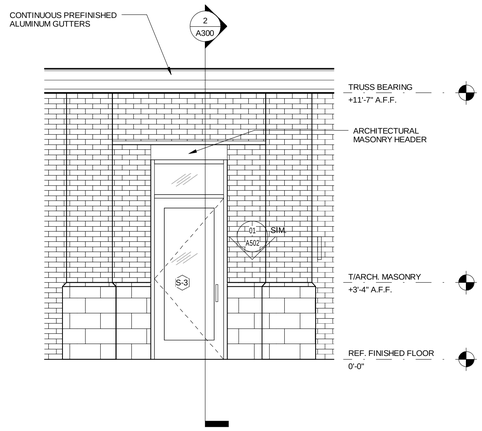

ENLARGED ELEVATION @ EAST ENTRY | 3/8" = 1'-0" | 3

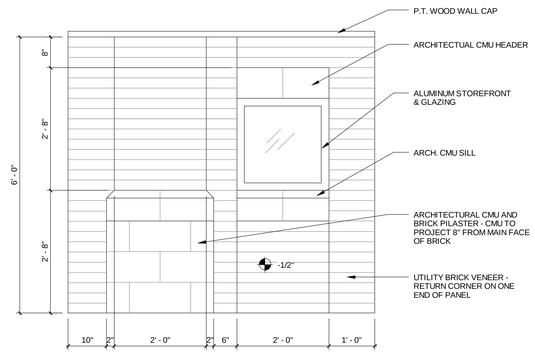

MOCK UP PANEL | 3/4" = 1'-0" | 5

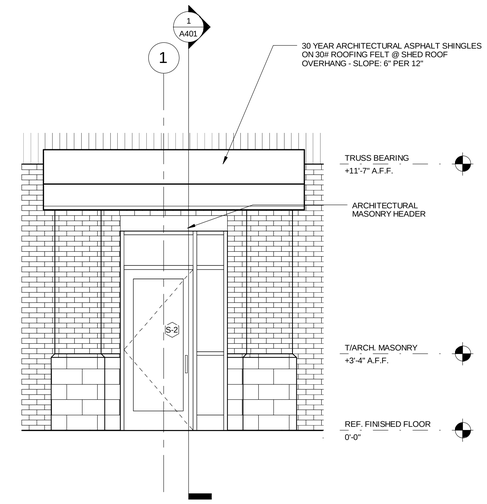

ENLARGED ELEVATION @ NORTH ENTRY | 3/8" = 1'-0" | 2

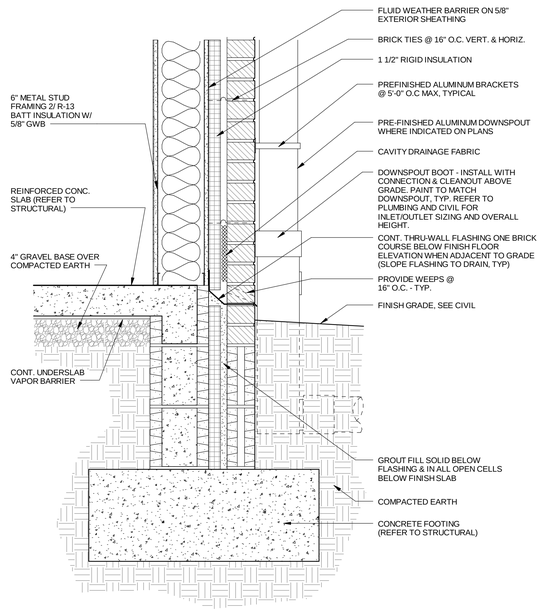

DOWNSPOUT BOOT DETAIL | 1 1/2" = 1'-0" | 4

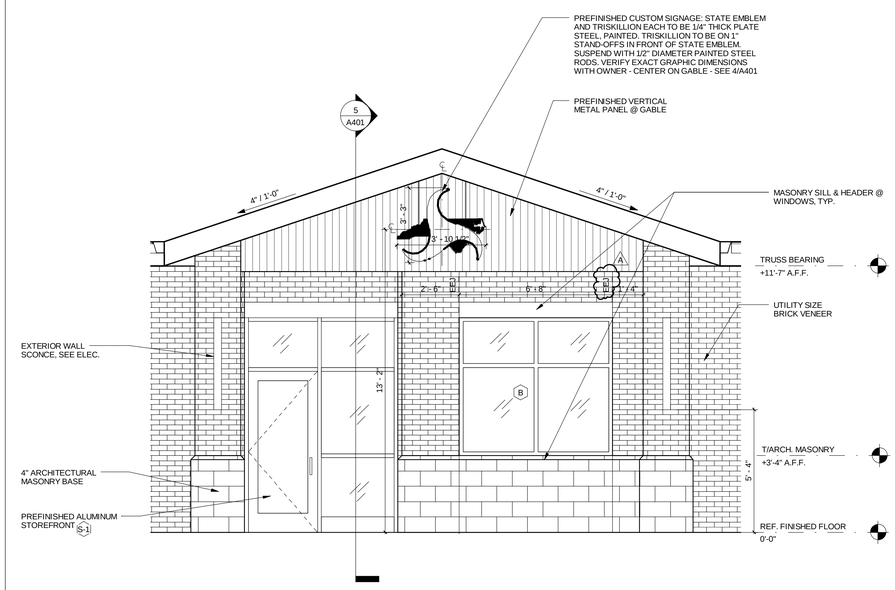

ENLARGED ELEVATION @ MAIN ENTRY | 3/8" = 1'-0" | 1

adwarchitects
environments for life
architecture planning interiors
101 WEST WORTHINGTON AVENUE
CHARLOTTE, NORTH CAROLINA 28203
P704.379.1919
F704.379.1920
www.adwarchitects.com

NCDOT Division 7: Roadside Environmental & Bituminous Unit Support Facility

Alamance County
Graham, NC

Construction Documents
Submittal SCO
#13-10060-01A

ELEVATION DETAILS

DATE: May 08, 2015
PROJECT NO: 13070

REVISIONS

NO:	DATE:	DESCRIPTION:
A	05.08.15	SCO Review Comments

THIS DRAWING IS THE PROPERTY OF ADW ARCHITECTS, PA. AND SHALL NOT BE REPRODUCED OR COPIED IN WHOLE OR PART. IT SHALL NOT BE USED ON ANY OTHER PROJECT OR GIVEN TO ANY OTHER COMPANY OR AGENCY WITHOUT THE CONSENT IF ADW ARCHITECTS, PA.

SEAL

SHEET NUMBER

A201

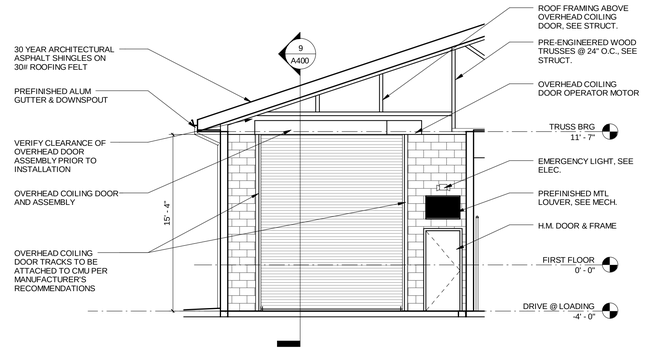

SECTION @ REU TRUCK BAY | 3/16" = 1'-0" | 4

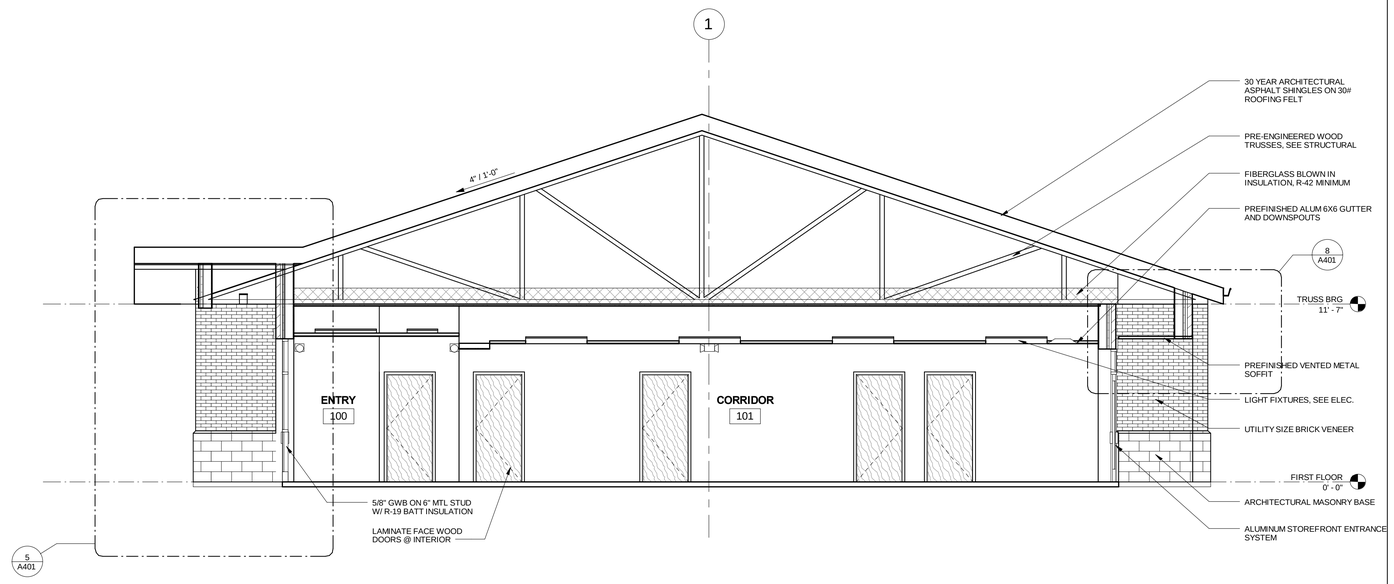

BUILDING SECTION @ OFFICE | 1/4" = 1'-0" | 2

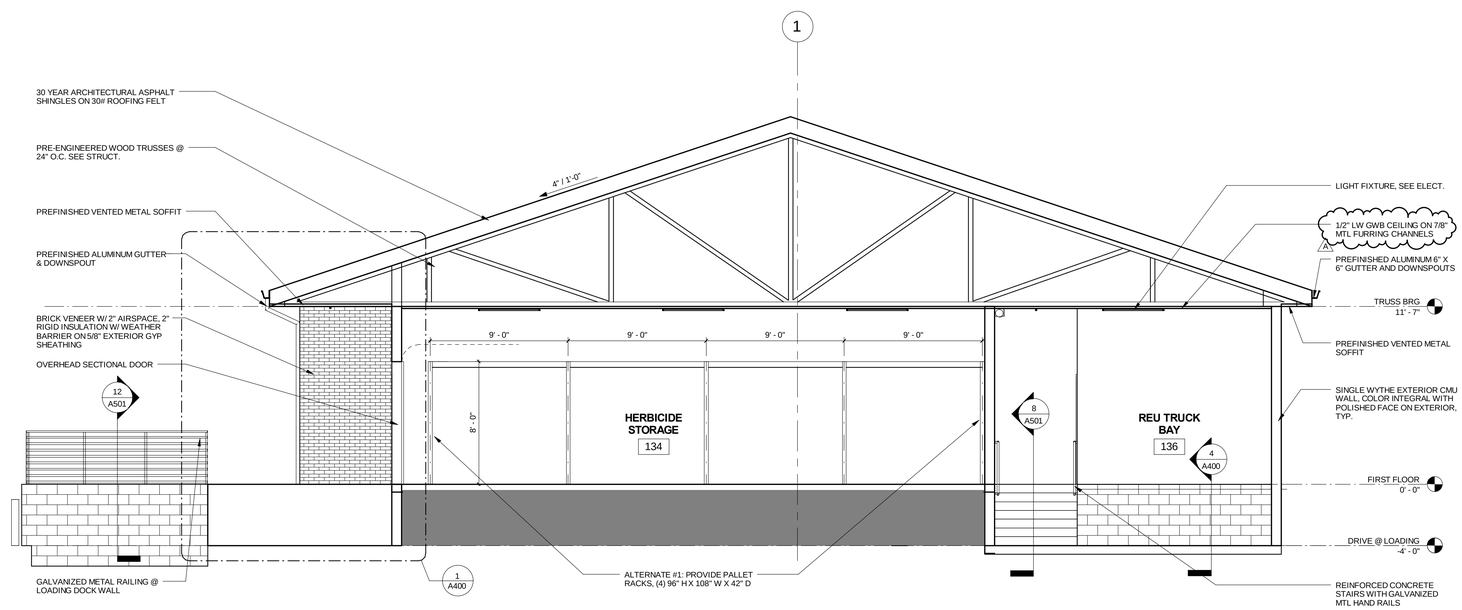

BUILDING SECTION @ STORAGE | 1/4" = 1'-0" | 1

adwarchitects
environments for life
architecture planning interiors

101 WEST WORTHINGTON AVENUE
CHARLOTTE, NORTH CAROLINA 28203
P704.379.1919
F704.379.1920
www.adwarchitects.com

NCDOT Division 7: Roadside Environmental & Bituminous Unit Support Facility

Alamance County
Graham, NC

Construction Documents
Submittal SCO
#13-10060-01A

BUILDING SECTIONS

DATE: May 08, 2015
PROJECT NO: 13070

REVISIONS

NO:	DATE:	DESCRIPTION:
A	05.08.15	SCO Review Comments

THIS DRAWING IS THE PROPERTY OF ADW ARCHITECTS, PA. AND SHALL NOT BE REPRODUCED OR COPIED IN WHOLE OR PART . IT SHALL NOT BE USED ON ANY OTHER PROJECT OR GIVEN TO ANY OTHER COMPANY OR AGENCY WITHOUT THE CONSENT IF ADW ARCHITECTS, PA.

SEAL

SHEET NUMBER

A300

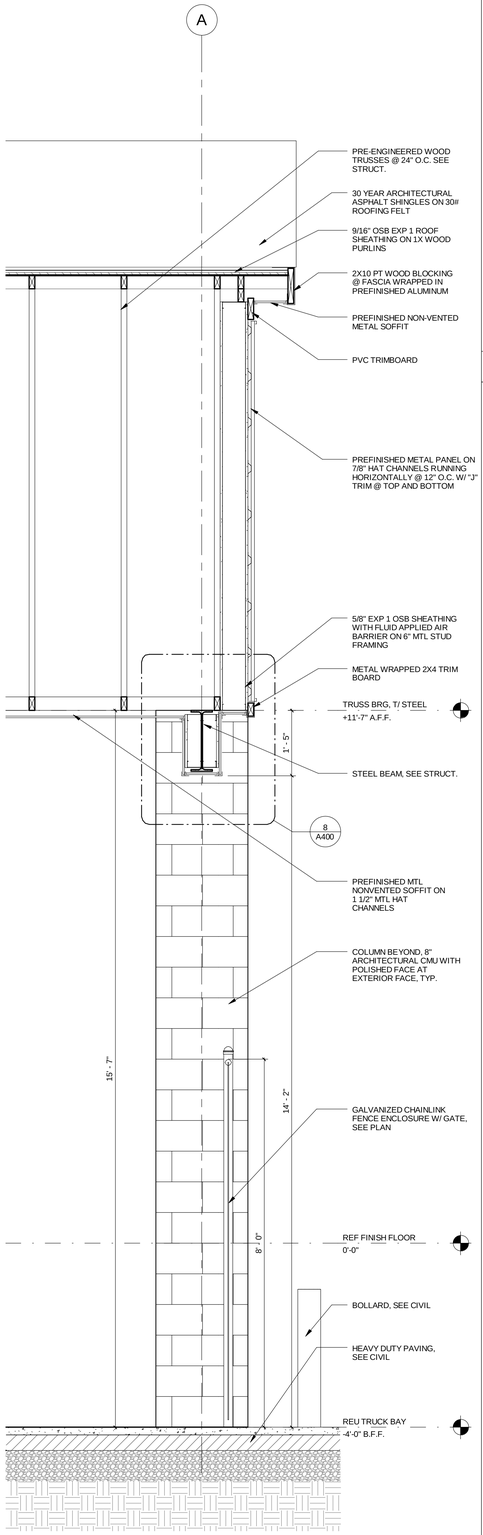

WALL SECTION @ T.S. COVERED STOR | 3/4" = 1'-0" | 13

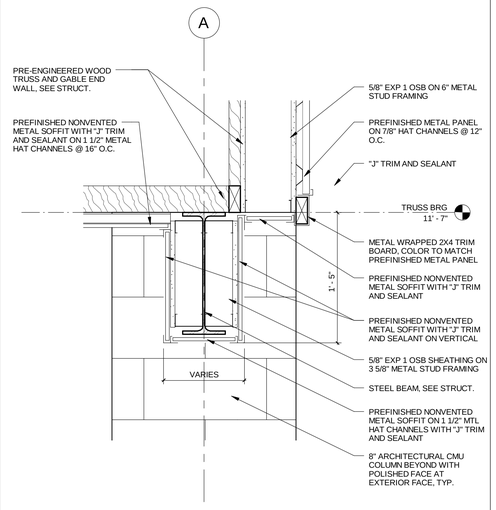

SOFFIT @ T.S. COVERED STOR | 1 1/2" = 1'-0" | 8

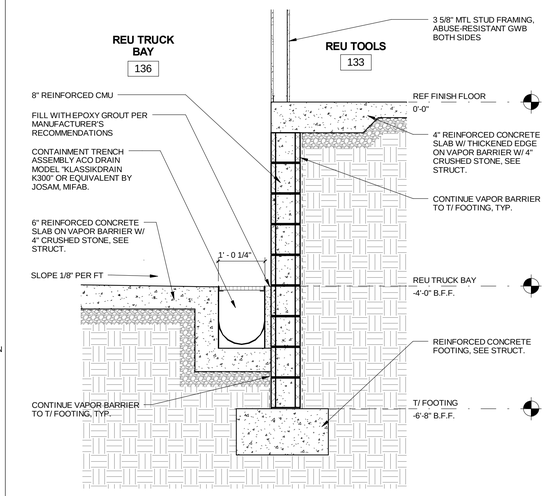

DETAIL @ CONTAINMENT TRENCH | 3/4" = 1'-0" | 4

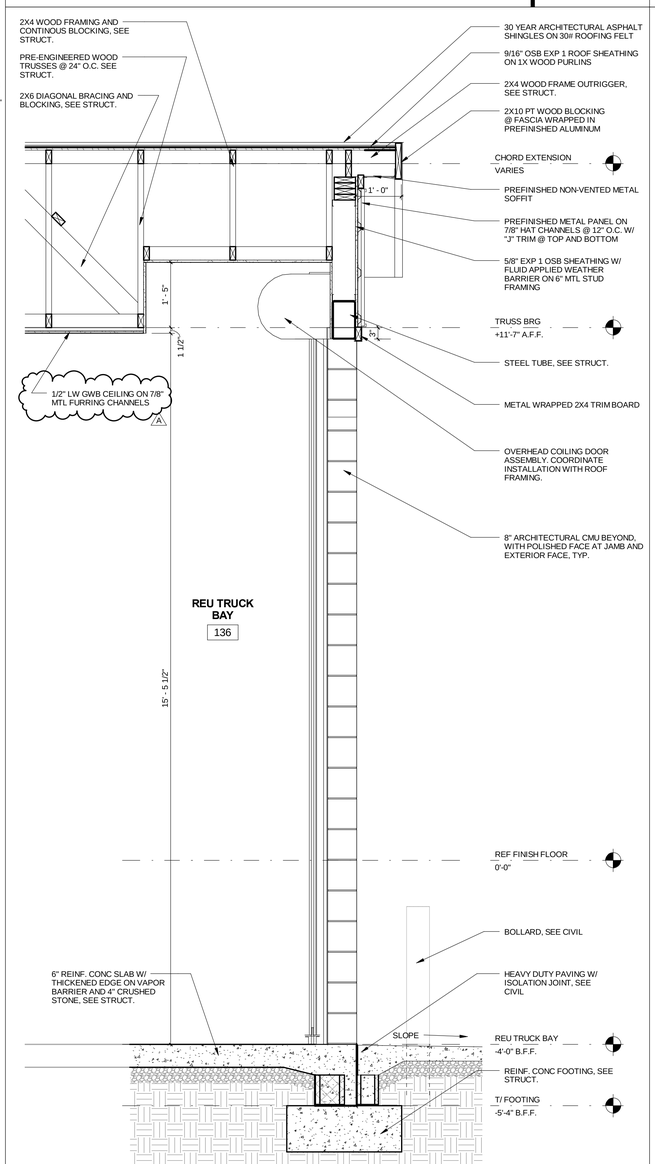

WALL SECTION @ O.H. COILING DOOR | 3/4" = 1'-0" | 9

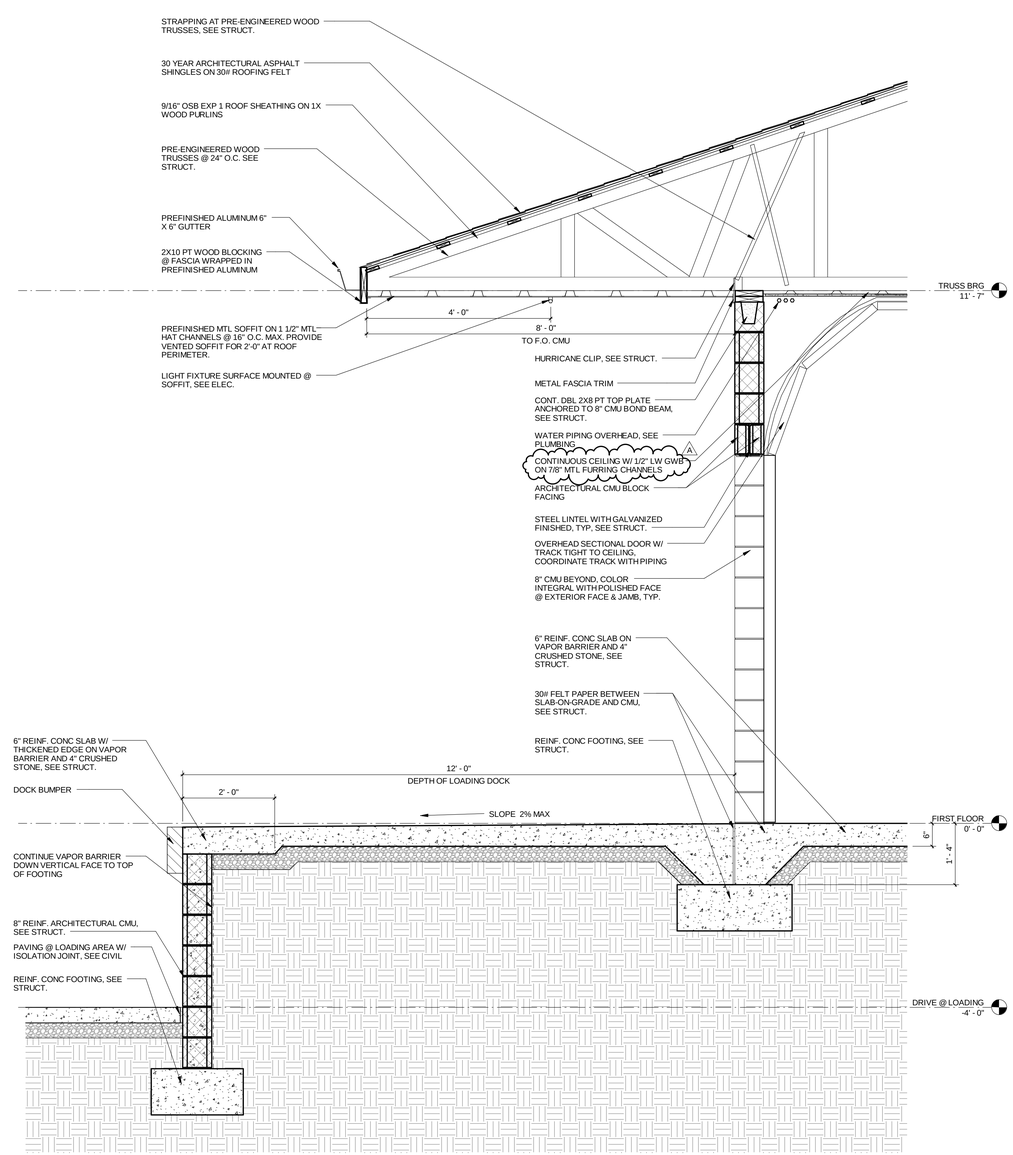

WALL SECTION @ LOADING DOCK | 3/4" = 1'-0" | 1

adwarchitects
environments for life
architecture planning interiors
101 WEST WORTHINGTON AVENUE
CHARLOTTE, NORTH CAROLINA 28203
P704.379.1919
F704.379.1920
www.adwarchitects.com

NCDOT Division 7: Roadside Environmental & Bituminous Unit Support Facility

Alamance County
Graham, NC

Construction Documents
Submittal SCO
#13-10060-01A

WALL SECTIONS & DETAILS @ STORAGE

DATE: May 08, 2015
PROJECT NO: 13070

REVISIONS

NO:	DATE:	DESCRIPTION:
A	05.08.15	SCO Review Comments

THIS DRAWING IS THE PROPERTY OF ADW ARCHITECTS, PA. AND SHALL NOT BE REPRODUCED OR COPIED IN WHOLE OR PART. IT SHALL NOT BE USED ON ANY OTHER PROJECT OR GIVEN TO ANY OTHER COMPANY OR AGENCY WITHOUT THE CONSENT IF ADW ARCHITECTS, PA.

SEAL

SHEET NUMBER

A400

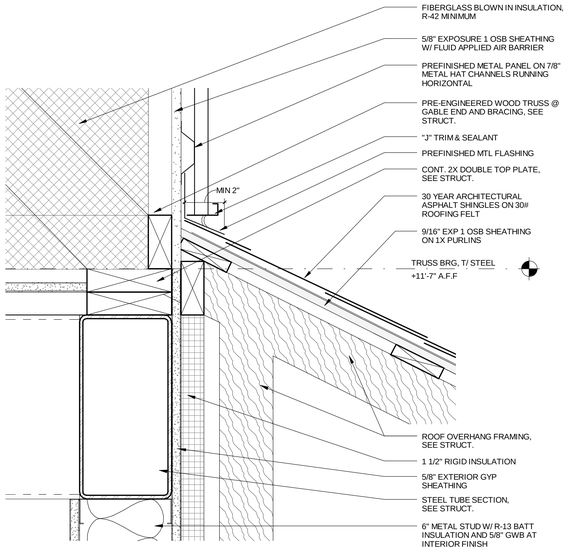

WALL TRANSITION @ NORTH ENTRY | 3" = 1'-0" | 12

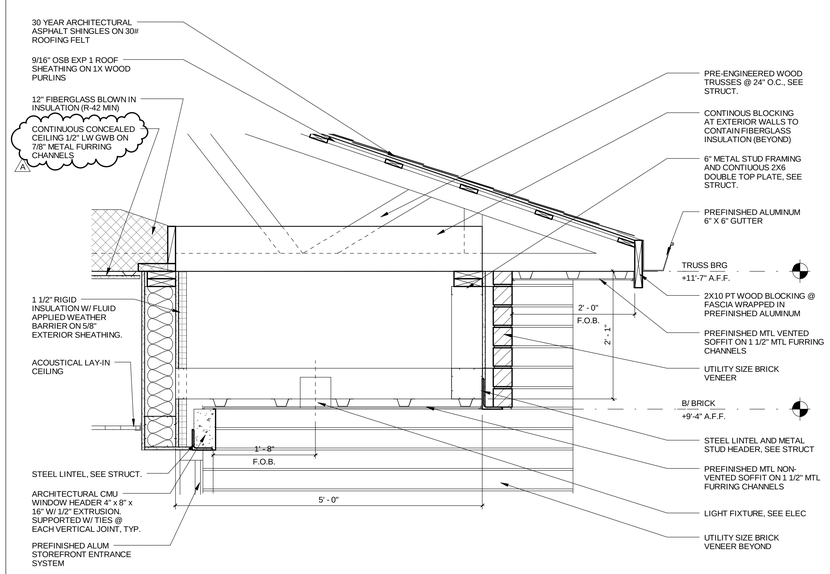

SOFFIT DETAIL @ OFFICE EAST ENTRY | 1" = 1'-0" | 8

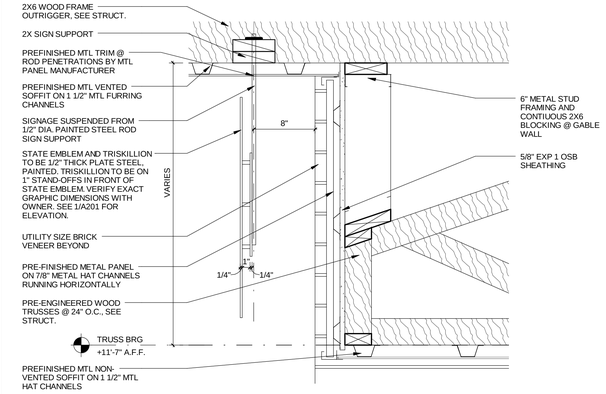

SOFFIT DETAIL @ OFFICE MAIN ENTRY | 1 1/2" = 1'-0" | 4

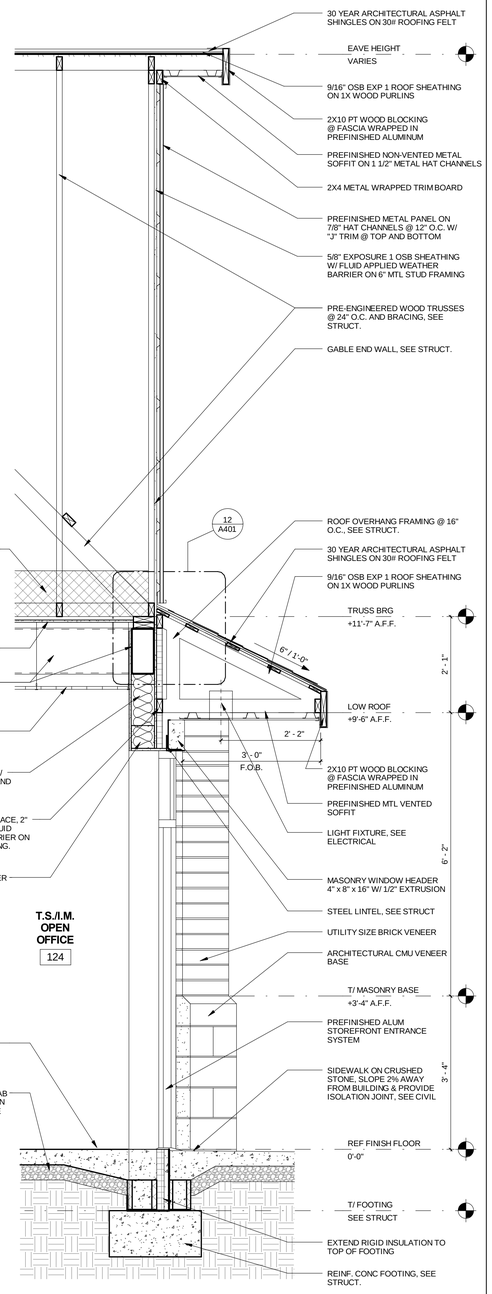

WALL SECTION @ NORTH ENTRY | 3/4" = 1'-0" | 1

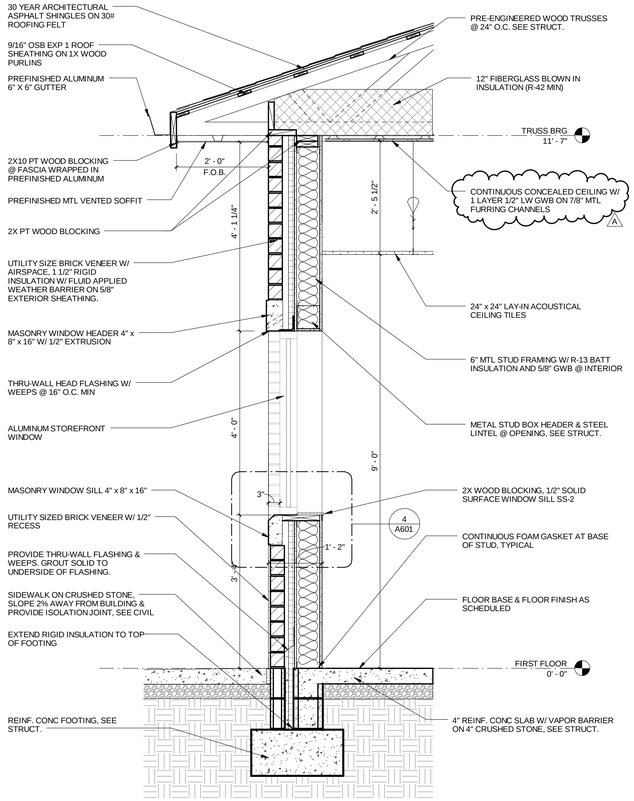

TYPICAL WALL SECTION @ OFFICE | 3/4" = 1'-0" | 9

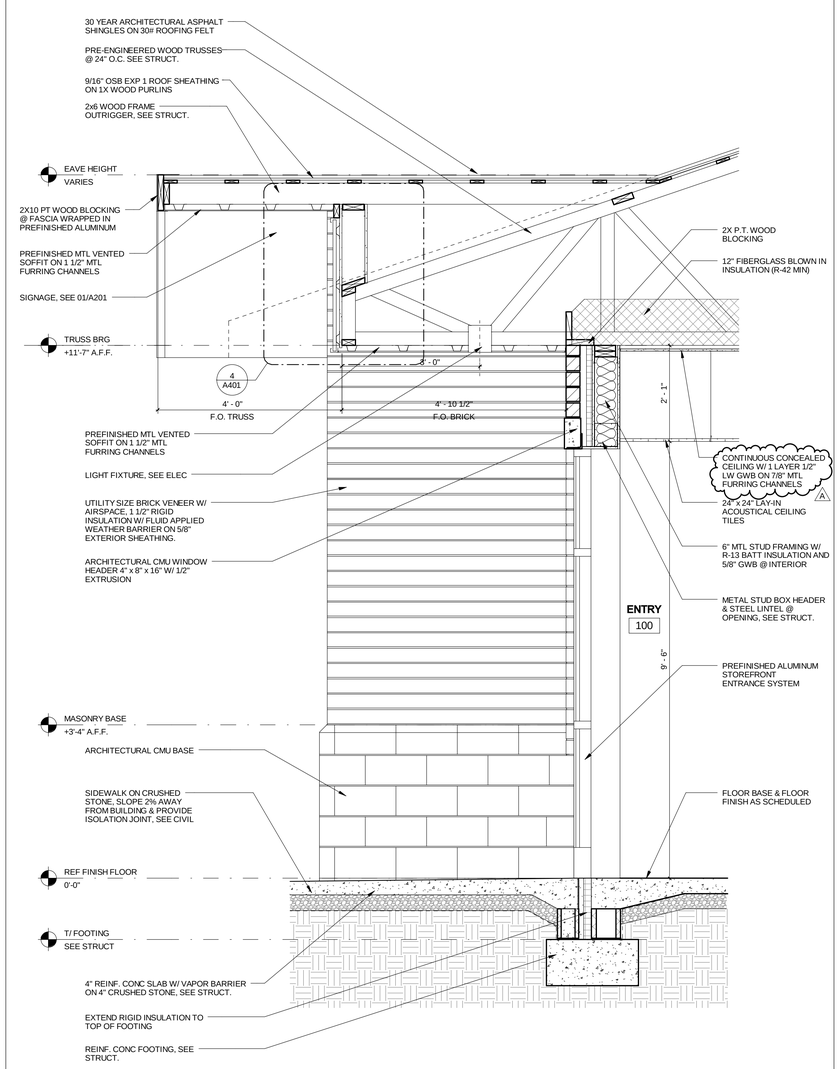

WALL SECTION @ OFFICE MAIN ENTRY | 3/4" = 1'-0" | 5

adwarchitects
environments for life
architecture planning interiors
101 WEST WORTHINGTON AVENUE
CHARLOTTE, NORTH CAROLINA 28203
P704.379.1919
F704.379.1920
www.adwarchitects.com

NCDOT Division 7: Roadside Environmental & Bituminous Unit Support Facility

Alamance County
Graham, NC

Construction Documents
Submittal SCO
#13-10060-01A

WALL SECTIONS & DETAILS @ OFFICE

DATE: May 08, 2015
PROJECT NO: 13070

REVISIONS

NO:	DATE:	DESCRIPTION:
A	05.08.15	SCO Review Comments

THIS DRAWING IS THE PROPERTY OF ADW ARCHITECTS, PA. AND SHALL NOT BE REPRODUCED OR COPIED IN WHOLE OR PART. IT SHALL NOT BE USED ON ANY OTHER PROJECT OR GIVEN TO ANY OTHER COMPANY OR AGENCY WITHOUT THE CONSENT IF ADW ARCHITECTS, PA.

SEAL

SHEET NUMBER

A401

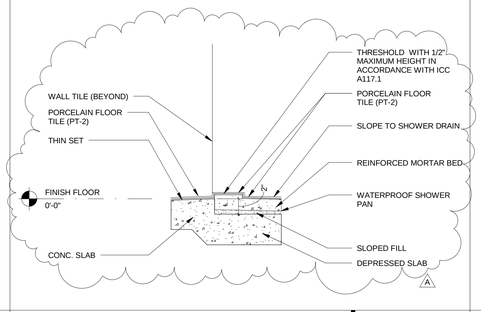

SHOWER THRESHOLD DETAIL | 1 1/2" = 1'-0" | 8

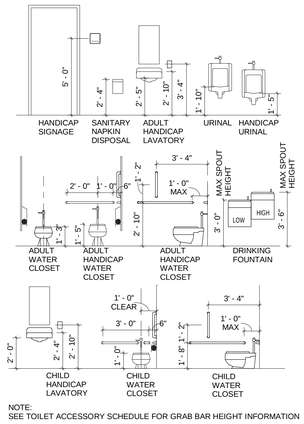

NOTE:
SEE TOILET ACCESSORY SCHEDULE FOR GRAB BAR HEIGHT INFORMATION

TLT ACCESSORY MOUNTING SCHED | 1/4" = 1'-0" | 4

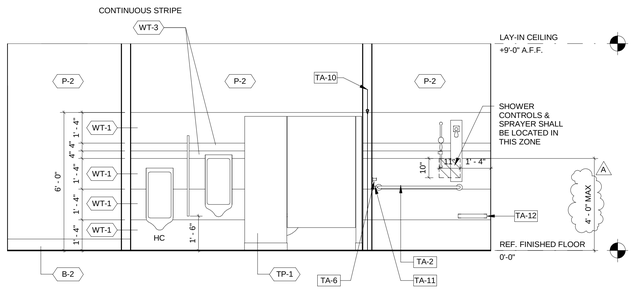

MENS WET WALL ELEV | 3/8" = 1'-0" | 11

TOILET ACCESSORIES				
SYMBOL	ACCESSORY	MOUNTING HT (ADULT)	MODEL	COMMENTS
TA-1	18" VERTICAL GRAB BAR	48" A.F.F. TO CENTERLINE	B-6806 Series	
TA-2	48" GRAB BAR	34" A.F.F. TO CENTERLINE	B-6806 Series	
TA-3	TOILET PAPER DISPENSER	17" A.F.F.	B-2888	
TA-4	SANITARY NAPKIN DISPENSER	19" A.F.F.	B-4354	
TA-5	36" GRAB BAR	34" A.F.F. TO CENTERLINE	B-6806 Series	
TA-6	COAT HOOK	48" A.F.F. TO CENTERLINE	B-670 Series	
TA-7	ELECTRIC HAND DRYER	40" A.F.F.	Xlerator XL-BW	
TA-8	SOAP DISPENSER	40" A.F.F.	B-2111	
TA-9	MIRROR	40" A.F.F. TO B/ MIRROR	B-290 Series	
TA-10	SHOWER CURTAIN, HOOKS & SHOWER CURTAIN ROD	84" A.F.F.	B-204-2, B-204-1 B-6107	
TA-11	24" GRAB BAR	34" A.F.F. TO CENTERLINE	B-6806 Series	
TA-12	SHOWER SEAT	17" A.F.F.	Bradley 9562	

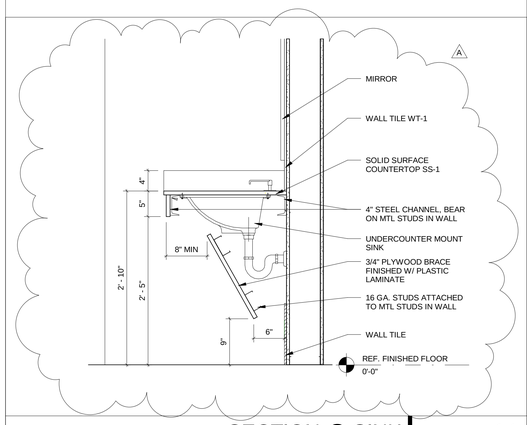

SECTION @ SINK | 1" = 1'-0" | 14

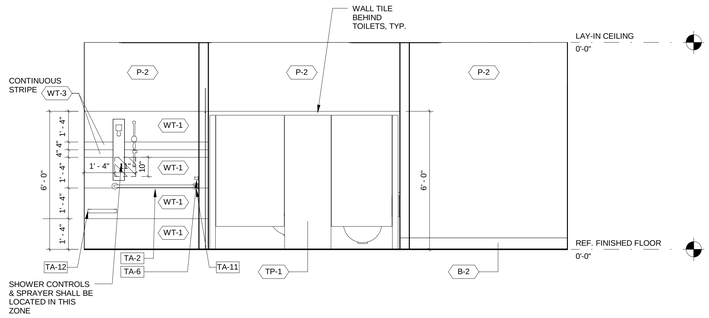

WOMENS WET WALL ELEV | 3/8" = 1'-0" | 10

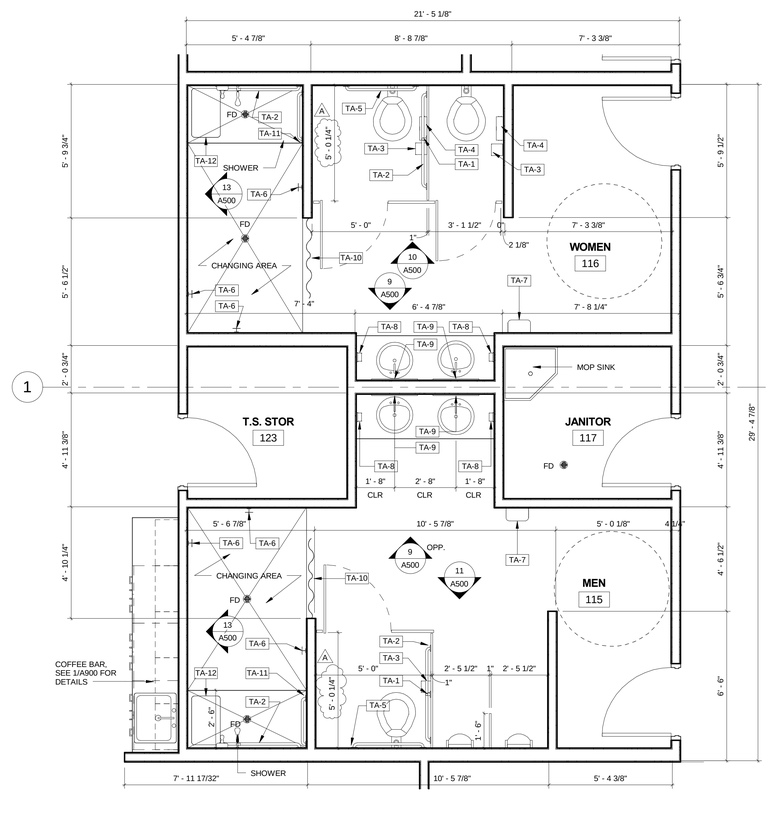

ENLARGED RESTROOM PLAN | 3/8" = 1'-0" | 1

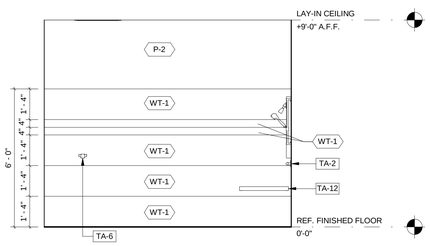

SHOWER SEAT WALL ELEV. | 3/8" = 1'-0" | 13

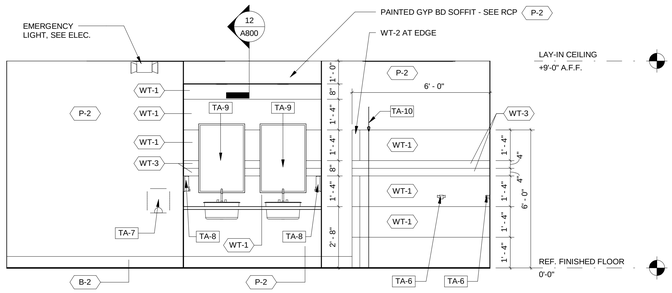

WOMENS VANITY ELEV (MEN SIM/OPP) | 3/8" = 1'-0" | 9

adwarchitects
environments for life
architecture planning interiors
101 WEST WORTHINGTON AVENUE
CHARLOTTE, NORTH CAROLINA 28203
P704.379.1919
F704.379.1920
www.adwarchitects.com

NCDOT Division 7: Roadside Environmental & Bituminous Unit Support Facility

Alamance County
Graham, NC

Construction Documents
Submittal SCO
#13-10060-01A

ENLARGED RESTROOM PLANS & ELEVATIONS

DATE: May 08, 2015
PROJECT NO: 13070

REVISIONS

NO:	DATE:	DESCRIPTION:
A	05.08.15	SCO Review Comments

THIS DRAWING IS THE PROPERTY OF ADW ARCHITECTS, PA. AND SHALL NOT BE REPRODUCED OR COPIED IN WHOLE OR PART. IT SHALL NOT BE USED ON ANY OTHER PROJECT OR GIVEN TO ANY OTHER COMPANY OR AGENCY WITHOUT THE CONSENT IF ADW ARCHITECTS, PA.

SEAL

JAMES GILMORE POWELL
REGISTERED ARCHITECT
5454
NORTH CAROLINA
CHARLOTTE, N.C.
05 06 15

SHEET NUMBER

A500

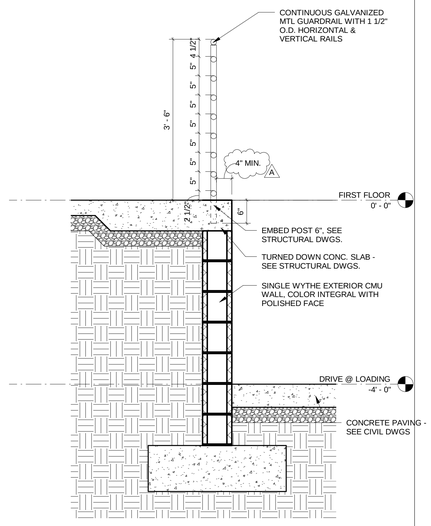

GUARDRAIL @ LOADING | 3/4" = 1'-0" | 12

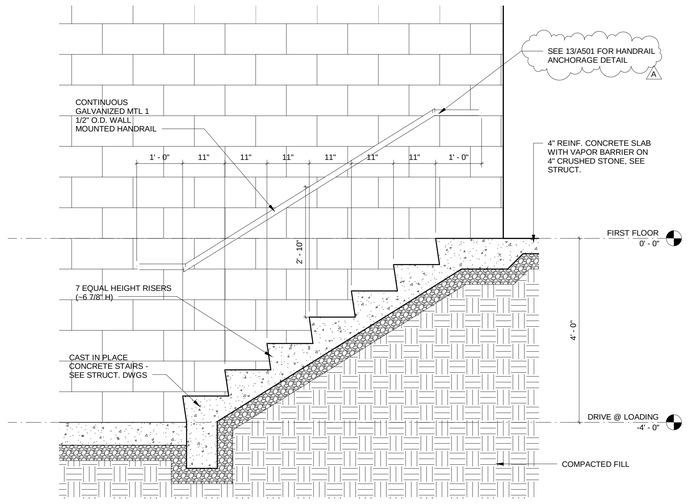

SECTION @ REU TRUCK BAY STAIR | 3/4" = 1'-0" | 8

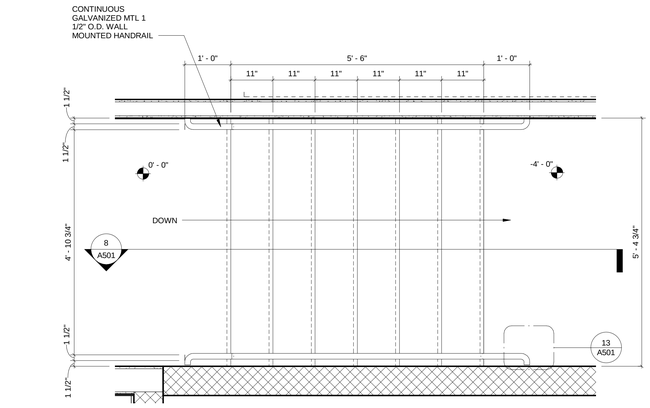

STAIR @ REU TRUCK BAY | 3/4" = 1'-0" | 4

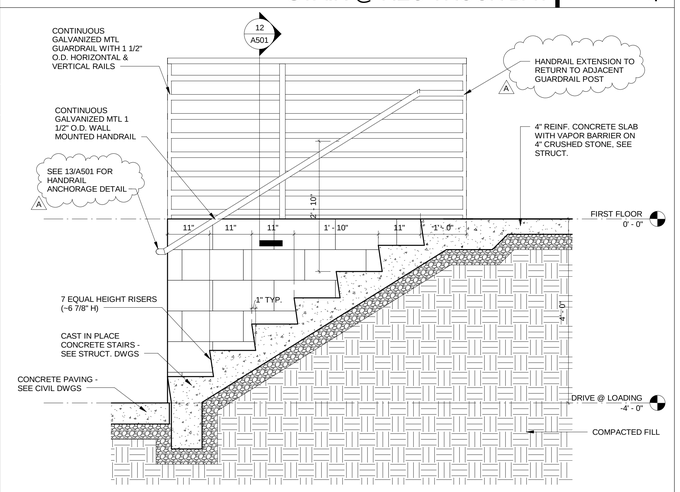

SECTION @ LOADING DOCK STAIR | 3/4" = 1'-0" | 3

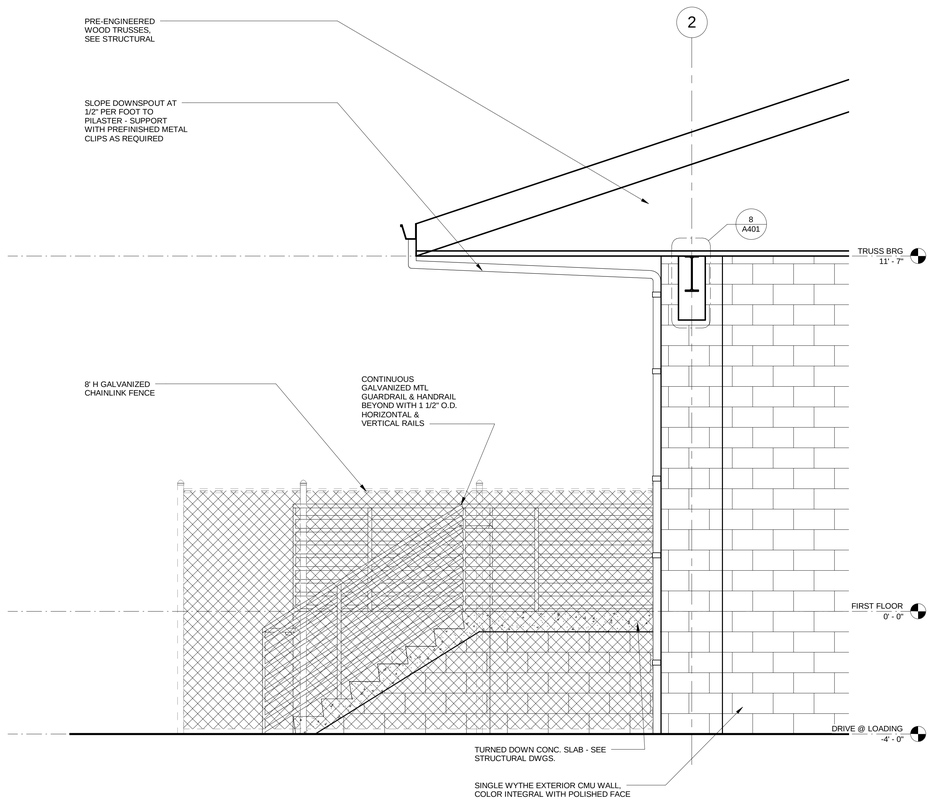

ELEVATION @ LOADING DOCK STAIR | 1/2" = 1'-0" | 5

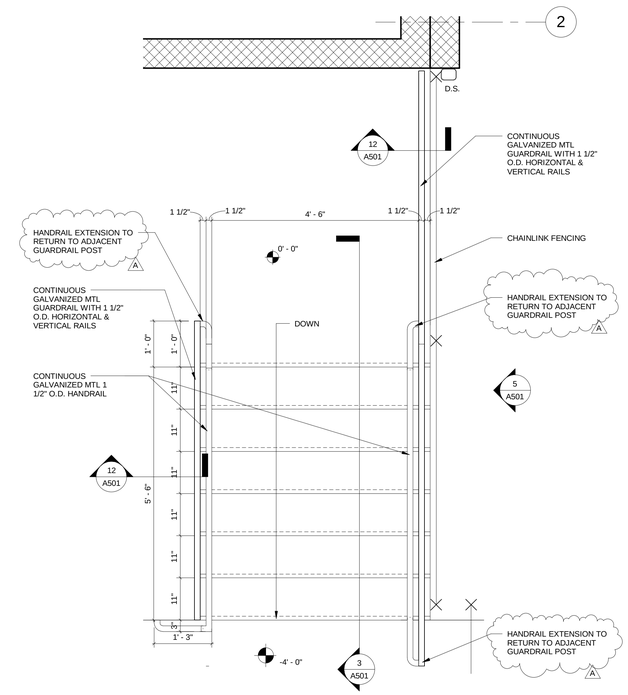

STAIR @ LOADING DOCK | 3/4" = 1'-0" | 1

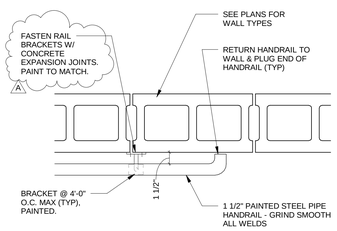

HANDRAIL DETAIL | 1 1/2" = 1'-0" | 13

adwarchitects
environments for life
architecture planning interiors
101 WEST WORTHINGTON AVENUE
CHARLOTTE, NORTH CAROLINA 28203
P704.379.1919
F704.379.1920
www.adwarchitects.com

NCDOT Division 7: Roadside Environmental & Bituminous Unit Support Facility

Alamance County
Graham, NC

Construction Documents
Submittal SCO
#13-10060-01A

ENLARGED STAIR PLANS & DETAILS

DATE: May 08, 2015
PROJECT NO: 13070

REVISIONS

NO:	DATE:	DESCRIPTION:
A	05.08.15	SCO Review Comments

THIS DRAWING IS THE PROPERTY OF ADW ARCHITECTS, PA. AND SHALL NOT BE REPRODUCED OR COPIED IN WHOLE OR PART. IT SHALL NOT BE USED ON ANY OTHER PROJECT OR GIVEN TO ANY OTHER COMPANY OR AGENCY WITHOUT THE CONSENT IF ADW ARCHITECTS, PA.

SEAL

JAMES GILMORE POWELL
REGISTERED ARCHITECT
5454
NORTH CAROLINA
CHARLOTTE, N.C.
05 08. 15

SHEET NUMBER

A501

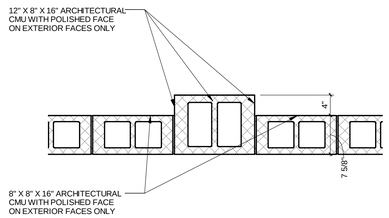

PILASTER DETAIL @ STORAGE | 1" = 1'-0" | 11

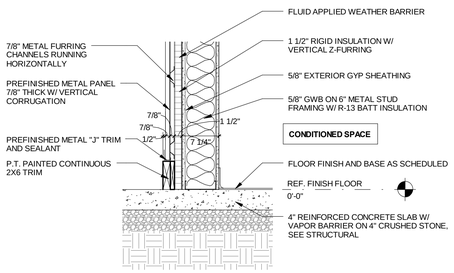

WALL BASE DETAIL @ CORR 129 | 1" = 1'-0" | 10

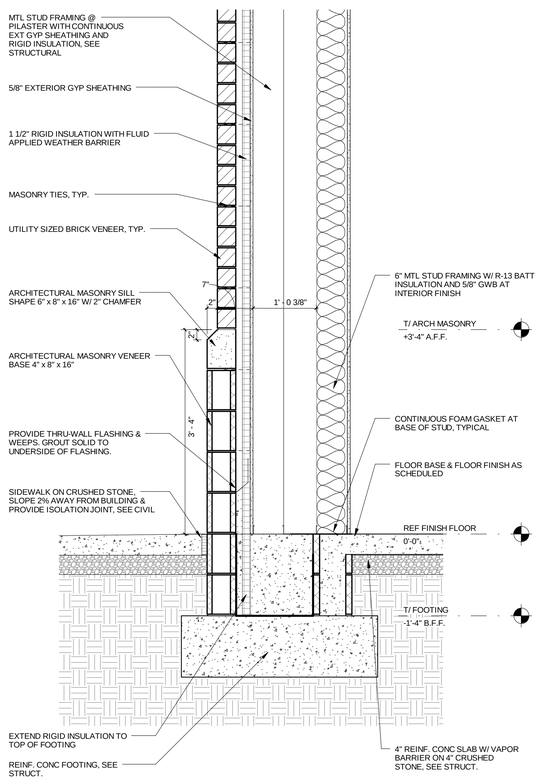

SECTION DETAIL @ PILASTER | 1" = 1'-0" | 9

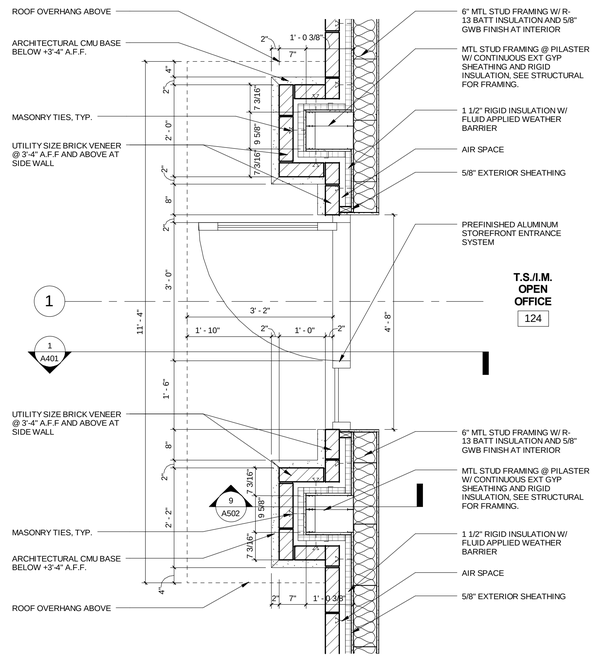

PLAN DETAIL - ENTRY @ NORTH ELEV | 3/4" = 1'-0" | 7

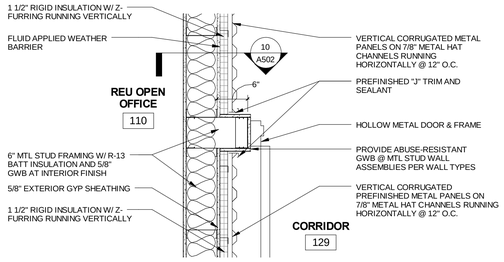

PLAN DETAIL 2 - CORRIDOR 129 | 1" = 1'-0" | 6

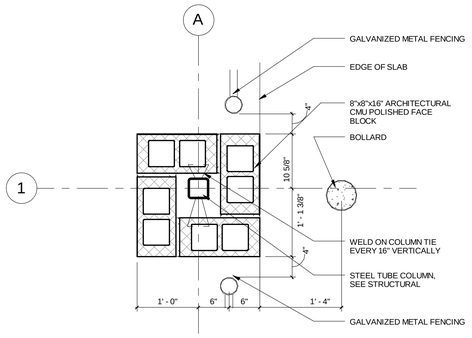

PLAN DETAIL - COL @ T.S. STORAGE | 1" = 1'-0" | 5

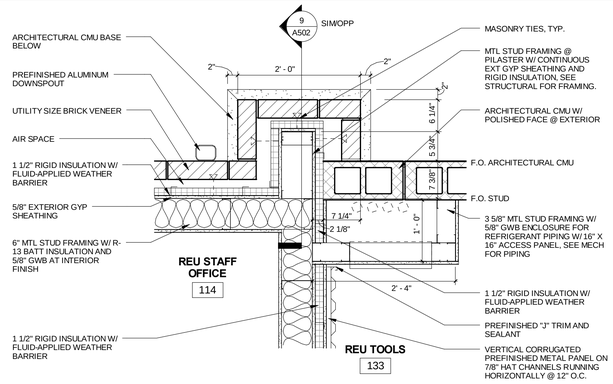

PLAN DETAIL - PILASTER @ EAST ELEV | 1" = 1'-0" | 4

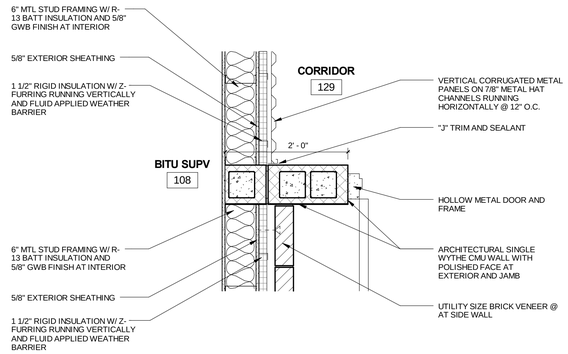

PLAN DETAIL - CORRIDOR 129 | 1" = 1'-0" | 3

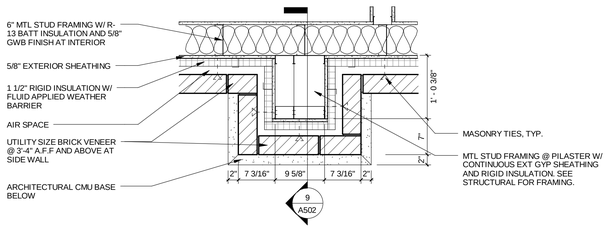

PLAN DETAIL - PILASTER @ WALL | 1" = 1'-0" | 2

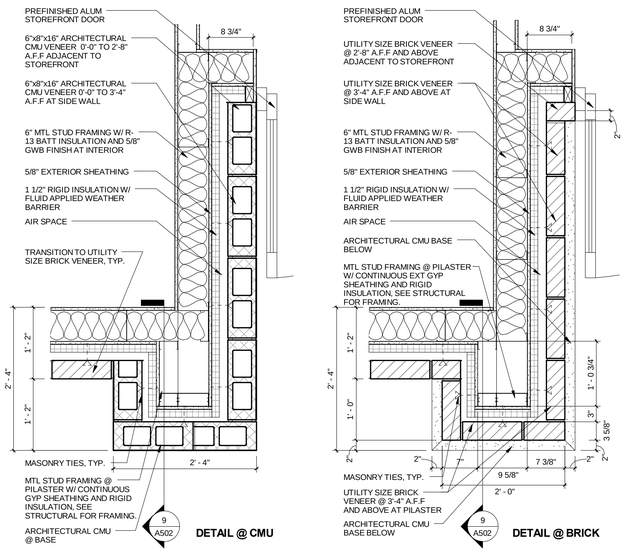

PLAN DETAIL - PILASTER @ CORNER | 1" = 1'-0" | 1

adwarchitects
environments for life
architecture planning interiors
101 WEST WORTHINGTON AVENUE
CHARLOTTE, NORTH CAROLINA 28203
P704.379.1919
F704.379.1920
www.adwarchitects.com

NCDOT Division 7: Roadside Environmental & Bituminous Unit Support Facility

Alamance County
Graham, NC

Construction Documents
Submittal SCO
#13-10060-01A

PLAN DETAILS

DATE: May 08, 2015
PROJECT NO: 13070

REVISIONS

NO:	DATE:	DESCRIPTION:

THIS DRAWING IS THE PROPERTY OF ADW ARCHITECTS, PA. AND SHALL NOT BE REPRODUCED OR COPIED IN WHOLE OR PART. IT SHALL NOT BE USED ON ANY OTHER PROJECT OR GIVEN TO ANY OTHER COMPANY OR AGENCY WITHOUT THE CONSENT IF ADW ARCHITECTS, PA.

SEAL

JAMES GILMORE POTEL
REGISTERED ARCHITECT
5454
NORTH CAROLINA
CHARLOTTE, N.C.
05.08.15

SHEET NUMBER

A502

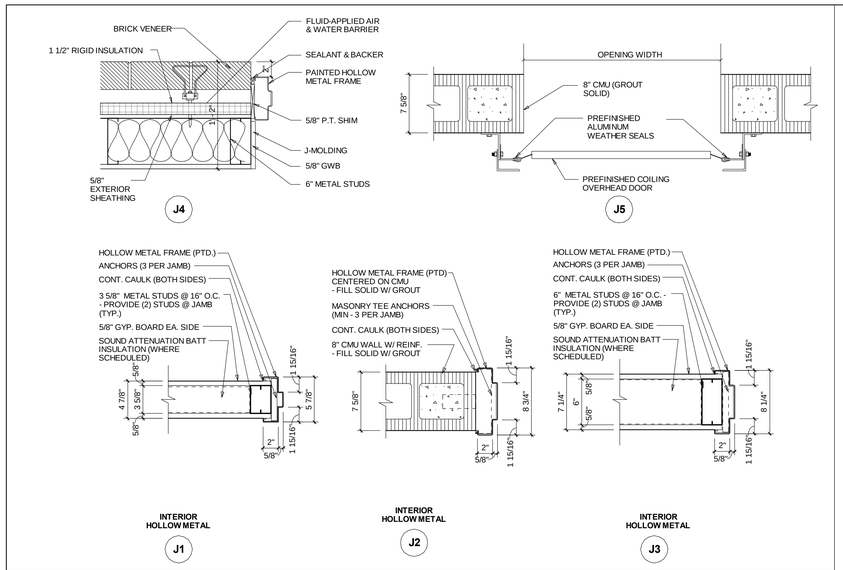

JAMB DETAILS 1 1/2" = 1'-0" 4

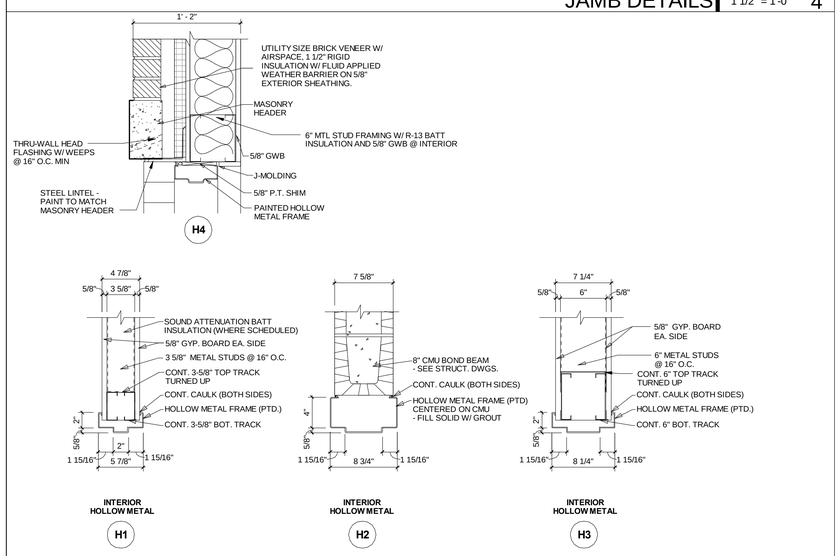

HEAD DETAILS 1 1/2" = 1'-0" 3

DOOR , FRAME AND HARDWARE SCHEDULE

DOOR #	ROOM NAME	DOOR LABEL	DOOR ELEVATION	DOOR SIZE WIDTH	DOOR SIZE HEIGHT	DOOR SIZE THICKNESS	DOOR FINISH	DOOR LOUVER	FRAME TYPE	FRAME MATERIAL	FRAME HEAD	FRAME JAMB	HARDWARE SILL	HARDWARE CLOSER	HARDWARE PANIC	HARDWARE SMOKE SEAL	HARDWARE SET	REMARKS	DOOR #
100	ENTRY		5	3' - 0"	7' - 0"		ALUM STOREFRONT			ALUMINUM	8/A401	8/A502	ALUM.	YES			2.0	STOREFRONT	100
101	CORRIDOR 101		5	3' - 0"	7' - 0"		ALUM STOREFRONT			ALUMINUM	5/A401	8/A502 SIM.	ALUM.	YES			3.0	STOREFRONT	101
101A	CORRIDOR 101	-	1	3' - 6"	7' - 0"	0' - 1 3/4"	HOLLOW MTL			HM	H2	J2		YES			6.1	EXTERIOR, NOT LOCKABLE FROM CORRIDOR 101 SIDE A	101A
102	CONFERENCE	-	4	3' - 0"	7' - 0"	0' - 1 3/4"	PL. LAM. FACED WD			HM	H1	J1					9.0	PROVIDE HORIZONTAL LOUVER BLINDS	102
103	WORK ROOM		6	3' - 0"	7' - 0"	0' - 1 3/4"	PL. LAM. FACED WD			HM	H1	J1					11.0		103
104	BITU STORAGE	-	2	3' - 0"	7' - 0"	0' - 1 3/4"	PL. LAM. FACED WD			HM	H3	J3		YES			14.0		104
105	BITU OPEN OFFICE		6	3' - 0"	7' - 0"	0' - 1 3/4"	PL. LAM. FACED WD			HM	H3	J3		YES			12.0		105
106	BITU STAFF		2	3' - 0"	7' - 0"	0' - 1 3/4"	PL. LAM. FACED WD			HM	H1	J1					9.0		106
107	BITU STAFF		2	3' - 0"	7' - 0"	0' - 1 3/4"	PL. LAM. FACED WD			HM	H1	J1					9.0		107
108	BITU STAFF		2	3' - 0"	7' - 0"	0' - 1 3/4"	PL. LAM. FACED WD			HM	H1	J1					9.0		108
109	REU STORAGE	-	2	3' - 0"	7' - 0"	0' - 1 3/4"	PL. LAM. FACED WD			HM	H1	J1		YES			14.0		109
110	REU OPEN OFFICE		6	3' - 0"	7' - 0"	0' - 1 3/4"	PL. LAM. FACED WD			HM	H1	J1		YES			12.0		110
111	DIV ENG OFFICE		2	3' - 0"	7' - 0"	0' - 1 3/4"	PL. LAM. FACED WD			HM	H1	J1					9.0		111
112	REU STAFF OFFICE		2	3' - 0"	7' - 0"	0' - 1 3/4"	PL. LAM. FACED WD			HM	H1	J1					9.0		112
113	REU STAFF OFFICE		2	3' - 0"	7' - 0"	0' - 1 3/4"	PL. LAM. FACED WD			HM	H1	J1					9.0		113
114	REU STAFF OFFICE		2	3' - 0"	7' - 0"	0' - 1 3/4"	PL. LAM. FACED WD			HM	H1	J1					9.0		114
115	MEN	-	2	3' - 0"	7' - 0"	0' - 1 3/4"	PL. LAM. FACED WD			HM	H1	J1		YES			8.0		115
116	WOMEN	-	2	3' - 0"	7' - 0"	0' - 1 3/4"	PL. LAM. FACED WD			HM	H1	J1		YES			8.0		116
117	JANITOR	-	2	3' - 0"	7' - 0"	0' - 1 3/4"	PL. LAM. FACED WD			HM	H1	J1		YES			14.0		117
118	MDF	-	2	3' - 0"	7' - 0"	0' - 1 3/4"	PL. LAM. FACED WD			HM	H1	J1		YES			14.0		118
119	TRANSFER			3' - 0"	7' - 0"	0' - 1 3/4"	HOLLOW MTL			HM	H4	J4	ALUM.	YES			7.0	EXTERIOR	119
120	MECH/ELEC		1	3' - 0"	7' - 0"	0' - 1 3/4"	HOLLOW MTL			HM	H4	J4	ALUM.	YES			4.0	EXTERIOR	120
121	T.S. SUPERVISOR		2	3' - 0"	7' - 0"	0' - 1 3/4"	PL. LAM. FACED WD			HM	H1	J1					9.0		121
123	T.S. STORAGE		2	3' - 0"	7' - 0"	0' - 1 3/4"	PL. LAM. FACED WD			HM	H1	J1					11.0		123
124	T.S./I.M. OPEN OFFICE		6	3' - 0"	7' - 0"	0' - 1 3/4"	PL. LAM. FACED WD			HM	H1	J1		YES			12.0		124
124A	T.S./I.M. OPEN OFFICE		5	3' - 0"	7' - 0"		ALUM STOREFRONT			ALUMINUM	1/A401	7/A502	ALUM.	YES			2.0	STOREFRONT	124A
125	I.M. STAFF		2	3' - 0"	7' - 0"	0' - 1 3/4"	PL. LAM. FACED WD			HM	H1	J1					9.0		125
126	I.M. STAFF		2	3' - 0"	7' - 0"	0' - 1 3/4"	PL. LAM. FACED WD			HM	H1	J1					9.0		126
127	I.M. STORAGE	-	2	3' - 0"	7' - 0"	0' - 1 3/4"	PL. LAM. FACED WD			HM	H1	J1		YES			14.0		127
129	CORRIDOR 129	-	1	3' - 0"	7' - 0"	0' - 1 3/4"	HOLLOW MTL			HM	H2	J2	ALUM.	YES			7.0	EXTERIOR	129
129A	CORRIDOR 129	-	1	3' - 0"	7' - 0"	0' - 1 3/4"	HOLLOW MTL			HM	H3	J3		YES			12.0	NOT LOCKABLE FROM REU TRUCK BAY 136 SIDE A	129A
130	BITU TOOLS	-	1	3' - 0"	7' - 0"	0' - 1 3/4"	HOLLOW MTL			HM	H2	J2		YES			14.0		130
131	T.S. SIGNS		1	4' - 0"	7' - 0"	0' - 1 3/4"	HOLLOW MTL			HM	H2	J2	ALUM.	YES			7.0	EXTERIOR	131
133	REU TOOLS		1	3' - 0"	7' - 0"	0' - 1 3/4"	HOLLOW MTL			HM	H2	J2		YES			14.0		133
134	HERBICIDE STORAGE		1	3' - 0"	7' - 0"	0' - 1 3/4"	HOLLOW MTL			HM	H2	J2	ALUM/	YES			6.0	EXTERIOR	134
134A	HERBICIDE STORAGE		7	8' - 0"	8' - 0"	0' - 1 1/2"	PREFINISHED STEEL				1/A400	J5 SIM					15.0	OH SECTIONAL DOOR	134A
135	SEED STORAGE		1	3' - 0"	7' - 0"	0' - 1 3/4"	HOLLOW MTL			HM	H2	J2	ALUM.	YES			6.0	EXTERIOR	135
135A	SEED STORAGE		7	8' - 0"	8' - 0"	0' - 1 1/2"	PREFINISHED STEEL				1/A400	J5 SIM					15.0	OH SECTIONAL DOOR	135A
136	REU TRUCK BAY		8	12' - 0"	15' - 4"		PREFINISHED STEEL				9/A400	J5					15.0	OH COILING DOOR	136
136A	REU TRUCK BAY		1	3' - 0"	7' - 0"	0' - 1 3/4"	HOLLOW MTL			HM	H2	J2		YES			5.0		136A

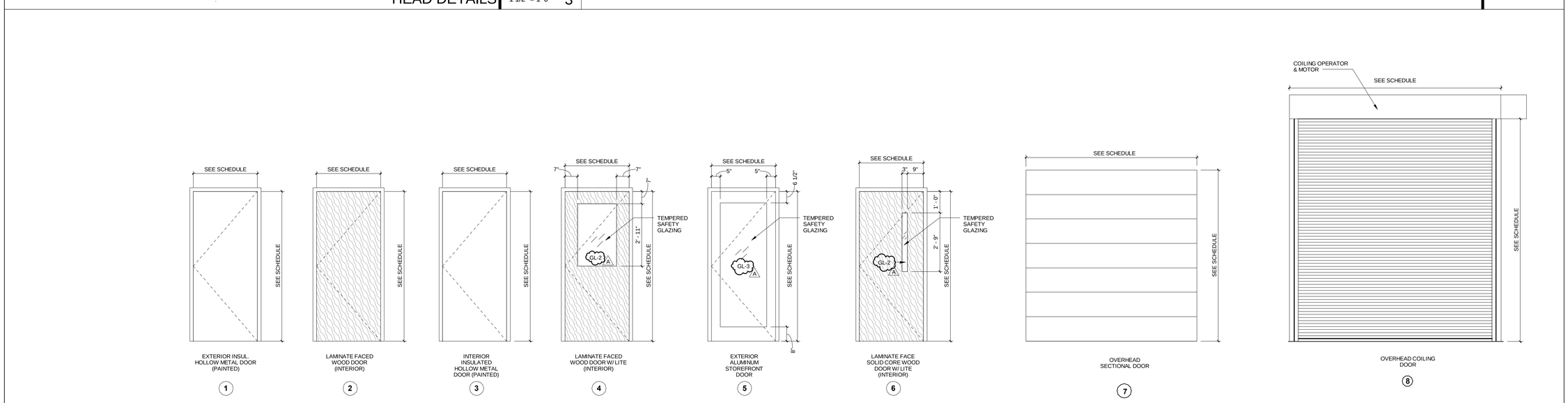

DOOR ELEVATIONS 1/2" = 1'-0" 1

adwarchitects
environments for life
architecture planning interiors
101 WEST WORTHINGTON AVENUE
CHARLOTTE, NORTH CAROLINA 28203
P704.379.1919
F704.379.1920
www.adwarchitects.com

NCDOT Division 7: Roadside Environmental & Bituminous Unit Support Facility

Alamance County
Graham, NC

Construction Documents
Submittal SCO
#13-10060-01A

DOOR SCHEDULE, ELEVATIONS & DETAILS

DATE: May 08, 2015
PROJECT NO: 13070

REVISIONS

NO:	DATE:	DESCRIPTION:
A	05.08.15	SCO Review Comments

THIS DRAWING IS THE PROPERTY OF ADW ARCHITECTS, PA. AND SHALL NOT BE REPRODUCED OR COPIED IN WHOLE OR PART. IT SHALL NOT BE USED ON ANY OTHER PROJECT OR GIVEN TO ANY OTHER COMPANY OR AGENCY WITHOUT THE CONSENT IF ADW ARCHITECTS, PA.

SEAL

JAMES GILMORE POWELL REGISTERED ARCHITECT 5454 NORTH CAROLINA CHARLOTTE, 05.08.15

SHEET NUMBER

A600

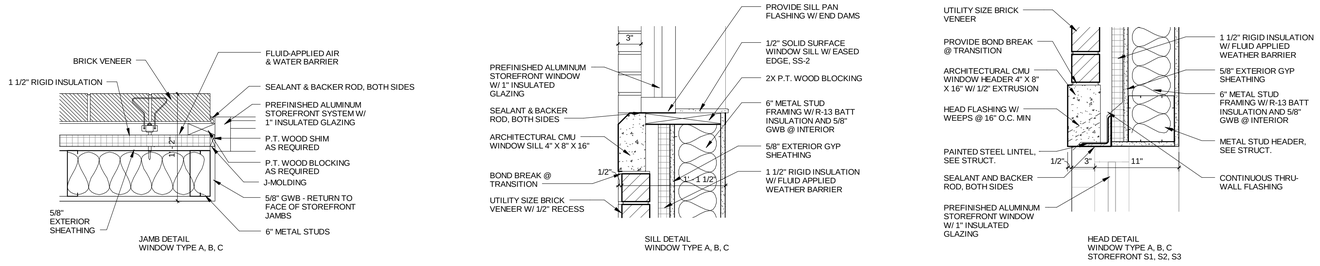

STOREFRONT WINDOW DETAILS | 1 1/2" = 1'-0" | 3

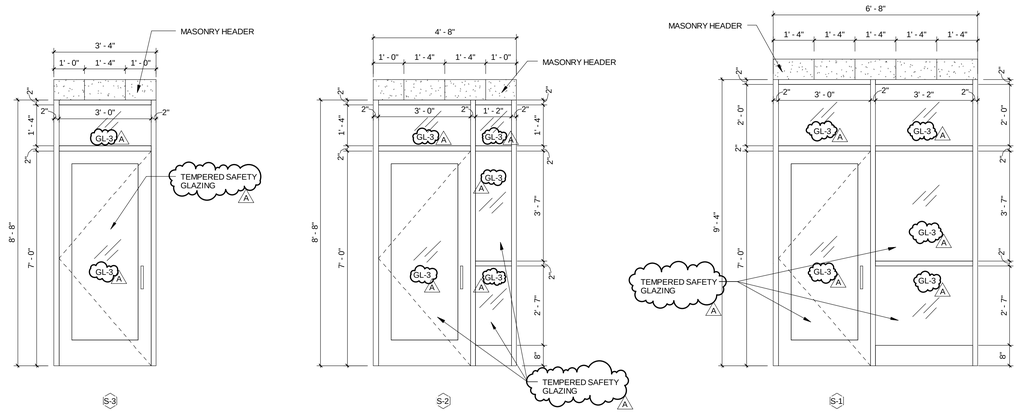

NOTE: PROVIDE HORIZONTAL LOUVER BLINDS @ ALL EXTERIOR WINDOWS.

STOREFRONT ELEVATIONS | 1/2" = 1'-0" | 2

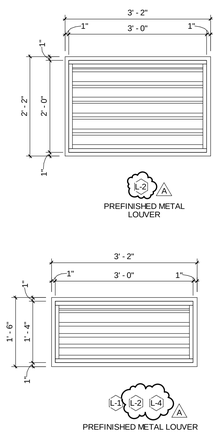

LOUVER ELEVATIONS | 3/4" = 1'-0" | 7

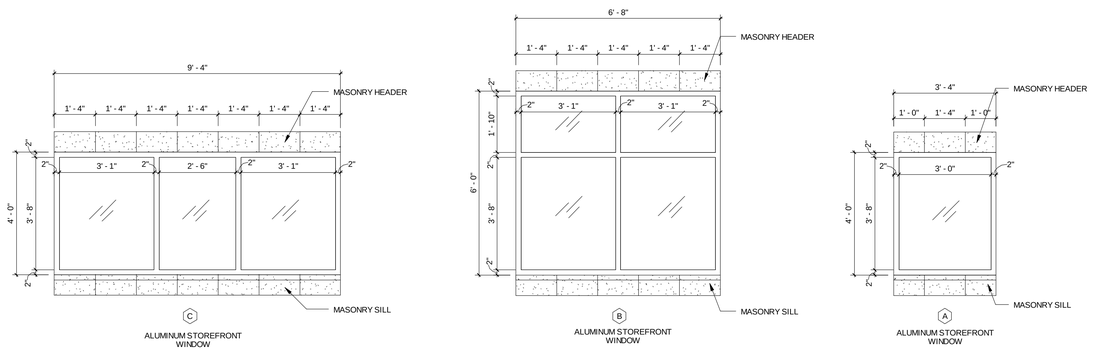

NOTE: PROVIDE HORIZONTAL LOUVER BLINDS @ ALL EXTERIOR WINDOWS.

WINDOW ELEVATIONS | 1/2" = 1'-0" | 1

adwarchitects
environments for life
architecture planning interiors
101 WEST WORTHINGTON AVENUE
CHARLOTTE, NORTH CAROLINA 28203
P704.379.1919
F704.379.1920
www.adwarchitects.com

NCDOT Division 7: Roadside Environmental & Bituminous Unit Support Facility

Alamance County
Graham, NC

Construction Documents
Submittal SCO
#13-10060-01A

WINDOW & STOREFRONT ELEVATIONS & DETAILS

DATE: May 08, 2015
PROJECT NO: 13070

REVISIONS

NO:	DATE:	DESCRIPTION:
A	05.08.15	SCO Review Comments

THIS DRAWING IS THE PROPERTY OF ADW ARCHITECTS, PA. AND SHALL NOT BE REPRODUCED OR COPIED IN WHOLE OR PART. IT SHALL NOT BE USED ON ANY OTHER PROJECT OR GIVEN TO ANY OTHER COMPANY OR AGENCY WITHOUT THE CONSENT IF ADW ARCHITECTS, PA.

SEAL

JAMES GILMORE POWELL
REGISTERED ARCHITECT
5454
NORTH CAROLINA
CHARLOTTE
05.08.15

SHEET NUMBER

A601

OFFICE FINISH PLAN 3/16" = 1'-0" 1

INTERIOR FINISH LEGEND

FINISH CODE	MANUFACTURER	PRODUCT NAME	PRODUCT NUMBER	COLOR	SIZE / WIDTH	DESCRIPTION	REMARKS
CEILING							
CLG-1				WHITE W/ WHITE GRID	2' X 2'	ACOUSTICAL LAY-IN CEILING TILE	-
CLG-2				WHITE W/ WHITE GRID	2' X 2'	ACOUSTICAL LAY-IN CEILING TILE W/ VINYL FACE	-
FLOOR BASE							
B-1	JOHNSONITE	RUBBER BASE	STANDARD	#40 BLACK	4" H	-	PROVIDE B-1 ON GYP BD WALLS IN STORAGE AREAS
B-2	FLORIDA TILE	PORCELAIN TILE BASE	TIME 2.0	BEIGE NATURAL	6" x 12"	COVE BASE TO MATCH PT-1	GR-1, USE ON TOILET ROOM WALLS WITHOUT WALL TILE
						-	
FLOORING							
PT-1	FLORIDA TILE	PORCELAIN TILE	TIME 2.0	BEIGE NATURAL	12" x 12"	UNGLAZED	GR-1
PT-2	FLORIDA TILE	PORCELAIN TILE MOSAIC	TIME 2.0	BEIGE NATURAL	12" x 12" MESH BACK	UNGLAZED, SHOWER AREAS & VENDING	GR-1
						-	
VCT-1	MANNINGTON	VINYL COMP. TILE	PROGRESSIONS	55129 PUTTY	12" x 12"	-	-
						-	-
SC-1	SHERWIN WILLIAMS	FLOOR COATING	ARMOR SEAL	HAZE GRAY		-	-
	-		-	-	-	-	-
WALLS							
P-1	SHERWIN WILLIAMS	PAINT	SW 7042	SHOJI WHITE	EGGSHEL	STANDARD WALL PAINT	-
P-2	SHERWIN WILLIAMS	PAINT	SW 7043	WORLDLY GRAY	EGGSHEL	STANDARD WALL PAINT	SEE FINISH SCHEDULE FOR EPOXY LOCATIONS
P-3	SHERWIN WILLIAMS	PAINT	SW 6163	GRASSLAND	EGGSHEL	ACCENT WALL PAINT	SEE FINISH SCHEDULE FOR EPOXY LOCATIONS CEILING PAINT & SOFFIT TO BE FLAT PAINT FINISH
P-4	SHERWIN WILLIAMS	PAINT	SW 6990	CAVIAR	SEMI-GLOSS	TRIM PAINT	SEE FINISH SCHEDULE FOR EPOXY LOCATIONS CEILING PAINT & SOFFIT TO BE FLAT PAINT FINISH
P-5	SHERWIN WILLIAMS	PAINT	SW 6906	CITRUS	GLOSS	SITE BOLLARDS	-
WT-1	FLORIDA TILE	WALL TILE	STREAMLINE WALL TILE	BUFF MATTE FT1420	4" x 16"	WALL TILE @ TOILETS, COFFEE BARS	VERTICAL STACK, GR-2, UP TO 6' @ RESTROOM WALLS
WT-2	FLORIDA TILE	WALL TILE	STREAMLINE WALL TILE	BUFF MATTE TO MATCH WT-1	4" x 16" BULLNOSE	WALL TILE @ TOILETS, COFFEE BARS	AS NOTED AT EXPOSED EDGES OF WALL TILE WT-1, GR-2
WT-3	REFLECTIONS IN GLASS TILE (DALTILE)	ACCENT WALL TILE	GLASS WALL TILE	DRY SPICE	4" x 8"	WALL TILE ACCENTS	HORIZONTAL 1/2 RUNNING BOND, GR-2
SURFACES							
PL-1	FORMICA	PLASTIC LAMINATE	909-58	BLACK	MATTE FINISH	MILLWORK VERTICAL SURFACE	-
SS-1	LG HAUSYS	SOLID SURFACE	HI-MACS CLASSIC	STORM GRANITE	-	COUNTERS @ COFFEE BARS, TOILET VANITIES	-
SS-2	SAMSUNG	SOLID SURFACE	STARON	PEBBLE TEA ROSE PT845	1/2 THICKNESS	INTERIOR WINDOW SILLS	
MISCELLANEOUS							
D-1	FORMICA	LAMINATE DOOR FACE	3485-58	BLACK WALNUT	MATTE FINISH	-	-
D-2		H.M. DOOR FINISH				PAINT TO MATCH ADJACENT BRICK OR CMU	
TP-1	SANTANA-COMTEC	SOLID PHENOLIC	CLASSICS	BLACK MICRODOT	-	TOILET PARTITIONS	-
					-	-	-
			-	-	-	-	-
BLD-1	HUNTER DOUGLAS	ALUM. HORIZONTAL BLINDS	-	386 SNOCAP WHITE	-	-	-
GR-1	TEC	EPOXY GROUT	ACCUCOLOR EFX	TBD	-	-	COLOR TO BE SELECTED FROM MANUF. STANDARD
GR-2	TEC	EPOXY GROUT	ACCUCOLOR EFX	TBD	-	-	COLOR TO BE SELECTED FROM MANUF. STANDARD
TR-1	SCHLUTER	FLOOR TRANSITION	PROFILE RENO-U EBU 110	BRUSHED STAINLESS STEEL 304	-	TRANSITION VCT-1 TO PT-1, PT-2	-
TR-2	JOHNSONITE	FLOOR TRANSITION	PROFILE SSR-XX-B	BLACK #40		TRANSITION VCT-1 TO SC-1	
TR-3	SCHLUTER	WALL TRANSITION	PROFILE JOLLY A80ATGB	W - WHITE	8MM PROFILE	TRANSITION WALL TILE TO PAINTED GWB	PROVIDE IN ALL LOCATIONS AT TOP OF WALL TILE

NOTES

1. TBD = TO BE DETERMINED
2. MANUFACTURERS LISTED IN LEGEND ARE BASIS OF DESIGN. A
3. NOT USED
4. VERIFY LOCATION OF CONTROL JOINTS IN ROOMS RECEIVING TILE FLOORS. SEE WRITTEN SPECIFICATIONS
5. ALL VCT TO BE LAID IN A QUARTER-TURN PATTERN W/ DIRECTIONAL STRIATIONS RUNNING IN ALTERNATE DIRECTIONS UNLESS NOTED OTHERWISE.
6. VERIFY AND COORDINATE FINISHES ON SCHEDULE WITH MILLORK DETAILS
7. REFER TO INTERIOR SECTIONS, ELEVATIONS, DETAILS AND REFLECTED CEILING PLAN FOR COORDINATION AND ADDITIONAL INFORMATION (SEE COVER INDEX AND/OR SHEET SERIES)

-

-

ROOM FINISH SCHEDULE

Number	NAME	FLOOR FINISH	BASE FINISH	TRIM	DOOR	WALLS: WALL FINISH	WALLS: ACCENT WALL	WALLS: CHAIR RAIL ABOVE	WALLS: CHAIR RAIL BELOW	MILLWORK: COUNTERTOP	MILLWORK: CABINET FRONT	MILLWORK: CABINET BASE	COMMENTS
100	ENTRY	VCT-1	B-1	P-4	D-1	P-1							
101	CORRIDOR	VCT-1, PT-2	B-1	P-4	D-1	P-1	P-3						
102	CONFERENCE	VCT-1	B-1	P-4	D-1	P-1	P-3						
103	WORK ROOM	VCT-1	B-1	P-4	D-1	P-1				SS-1	PL-1		
104	BITU STORAGE	VCT-1	B-1	P-4	D-1	P-1							
105	BITU OPEN OFFICE	VCT-1	B-1	P-4	D-1	P-1	P-3			SS-1	PL-1		
106	BITU STAFF	VCT-1	B-1	P-4	D-1	P-2							
107	BITU STAFF	VCT-1	B-1	P-4	D-1	P-2							
108	BITU SUPV	VCT-1	B-1	P-4	D-1	P-2							
109	REU STORAGE	VCT-1	B-1	P-4	D-1	P-1							
110	REU OPEN OFFICE	VCT-1	B-1	P-4	D-1	P-1	P-3			SS-1	PL-1		
111	DIV ENG OFFICE	VCT-1	B-1	P-4	D-1	P-2							
112	REU STAFF OFFICE	VCT-1	B-1	P-4	D-1	P-2							
113	REU STAFF OFFICE	VCT-1	B-1	P-4	D-1	P-2							
114	REU STAFF OFFICE	VCT-1	B-1	P-4	D-1	P-2							
115	MEN	PT-1	B-2	P-4	D-1	WT-1, WT-2	P-2 EPOXY			SS-1			WALL TILE UP TO 6' AT WET WALLS BEHIND TOILETS AND IN SHOWER AREA.
116	WOMEN	PT-1	B-2	P-4	D-1	WT-1, WT-2	P-2 EPOXY			SS-1			WALL TILE UP TO 6' AT WET WALLS BEHIND TOILETS AND IN SHOWER AREA.
117	JANITOR	SC-1	B-1	P-4	D-1	P-1							
118	MDF	VCT-1	B-1	P-4	D-1	P-1							
119	TRANSFER	SC-1	B-1		D-2	P-1							
120	MECH/ELEC	SC-1	B-1		D-2	P-1							
121	T.S. SUPERVISOR	VCT-1	B-1	P-4	D-1	P-2							
123	T.S. STOR	VCT-1	B-1	P-4	D-1	P-1							
124	T.S./I.M. OPEN OFFICE	VCT-1	B-1	P-4	D-1	P-1	P-3			SS-1	PL-1		
125	I.M. STAFF	VCT-1	B-1	P-4	D-1	P-2							
126	I.M. STAFF	VCT-1	B-1	P-4	D-1	P-2							
127	I.M. STORAGE	VCT-1	B-1	P-4	D-1	P-2							
129	CORRIDOR	SC-1			D-2	P-1							
130	BITU TOOLS	SC-1			D-2								
131	T.S. SIGN STOR	SC-1			D-2								
132	T.S. STORAGE	SC-1			D-2								
133	REU TOOLS	SC-1			D-2								
134	HERBICIDE STORAGE	SC-1			D-2								
135	SEED STORAGE	SC-1			D-2								
136	REU TRUCK BAY	SC-1			D-2								

adwarchitects
environments for life
architecture planning interiors
101 WEST WORTHINGTON AVENUE
CHARLOTTE, NORTH CAROLINA 28203
P704.379.1919
F704.379.1920
www.adwarchitects.com

NCDOT Division 7: Roadside Environmental & Bituminous Unit Support Facility

Alamance County
Graham, NC

Construction Documents
Submittal SCO
#13-10060-01A

FINISH SCHEDULE, LEGEND & PLANS

DATE: May 08, 2015
PROJECT NO: 13070

REVISIONS
NO: DATE: DESCRIPTION:

THIS DRAWING IS THE PROPERTY OF ADW ARCHITECTS, PA. AND SHALL NOT BE REPRODUCED OR COPIED IN WHOLE OR PART .IT SHALL NOT BE USED ON ANY OTHER PROJECT OR GIVEN TO ANY OTHER COMPANY OR AGENCY WITHOUT THE CONSENT IF ADW ARCHITECTS, PA.

SEAL

SHEET NUMBER

A700

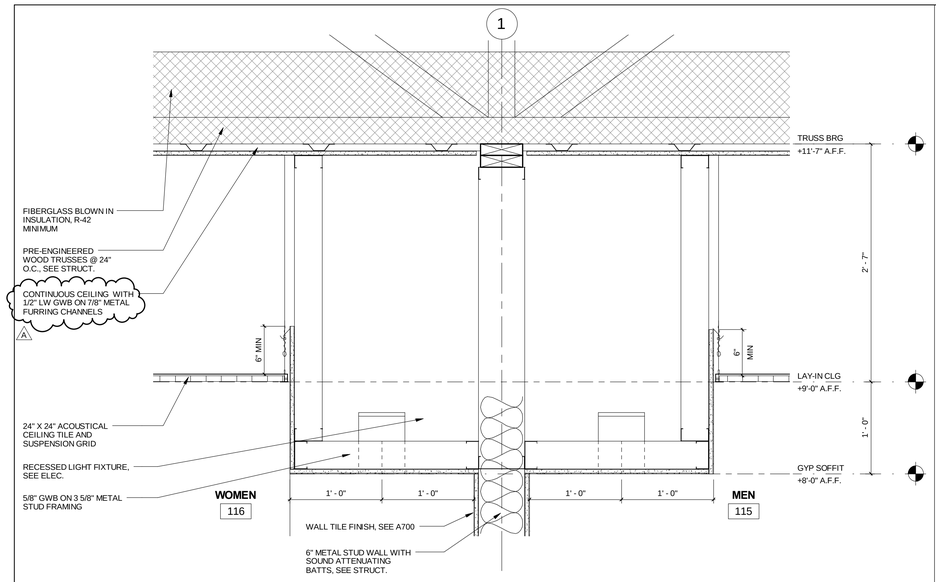

SOFFIT DETAIL @ RESTROOM | 1 1/2" = 1'-0" | 12

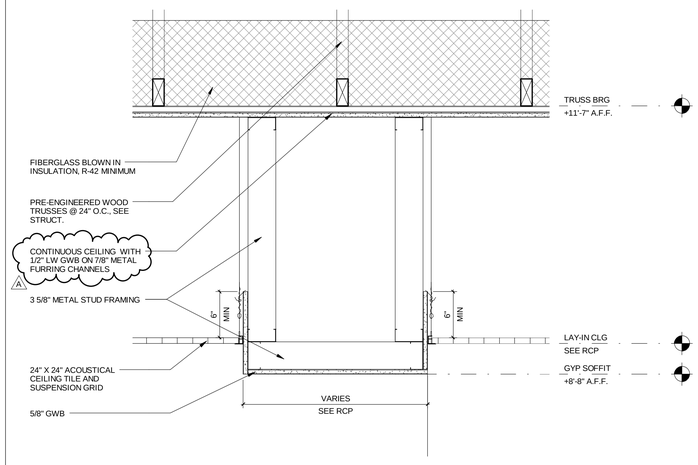

SOFFIT DETAIL @ CORRIDOR | 1 1/2" = 1'-0" | 8

REFLECTED CEILING PLAN SYMBOL LEGEND:

- 1 / 9'-4" — CEILING TYPE / CEILING HEIGHT-FROM FINISH FLOOR
- 2'x4' FLUORESCENT LIGHT FIXTURE AS REQ'D. SEE ELEC. DWGS. FOR LENS TYPES.
- 48" X 6" RECESSED FLUORESCENT LIGHT FIXTURE
- 4' FLUORESCENT STRIP AS REQ'D. SEE ELEC. DWGS. FOR LENS TYPES.
- CEILING MOUNTED PENDANT
- WALL MOUNTED LIGHT FIXTURE
- RECESSED LIGHT FIXTURE
- WALL MOUNTED SCONCE (SEE PLANS FOR HEIGHT) SEE ELEC. DWGS
- CLG. MOUNTED VANDAL PROOF UNDER CANOPY LIGHT- SEE ELEC. DWGS
- CEILING STROBE
- EXIT LIGHT-WALL MOUNTED, SEE ELEC. DWGS.
- EXIT LIGHT-CEILING MOUNTED, SEE ELEC. DWGS.
- S — SMOKE DETECTOR VERIFY LOCATION W/ ELEC. DWGS
- HD — HEAT DETECTOR
- OS — OCCUPANCY SENSOR
- 2x2 HVAC EXHAUST GRILLE-SEE MECH. DRAWINGS
- 2x2 HVAC RETURN GRILLE-SEE MECH. DRAWINGS
- EXHAUST FAN-SEE MECH. DRAWINGS
- CEILING MOUNTED FIRE ALARM DEVICE FOR REF. ONLY. SEE ELEC. DWGS. FOR LOCATIONS.
- GYPSUM BOARD SOFFIT

GENERAL NOTES:

1.) ALL CEILING HEIGHTS ARE RELATIVE TO FINISH FLOOR ELEVATION UNLESS OTHERWISE NOTED.

2.) SEE ELECTRICAL DRAWINGS FOR LOCATION OF ALL NEW EMERGENCY LIGHTS, EXIT SIGNS, HORNS, STROBES, & PULL STATIONS

3.) ALL LIGHT FIXTURES, SPEAKERS, ECT. IN CEILING TYPES ARE TO HAVE WHITE TRIM OR COVERS U.N.O.

4.) ALL INTERIOR SPACES SHALL HAVE CONTINUOUS, CONCEALED CEILING SEPARATION FROM ATTIC. CEILING SYSTEM TO BE 1 LAYER OF 5/8" GWB ON 7/8" MTL FURRING CHANNELS FASTENED TO UNDERSIDE OF ROOF STRUCTURE.

5.) ALL CEILINGS ARE TO BE INSTALLED AS REQUIRED BY ASCE 7-05 CHAPTER 13 SEISMIC DESIGN FOR NONSTRUCTURAL COMPONENTS AND ANCHORED PER NCSBC SECTION 1621.

CEILING TYPES:

TYPE #1:	ACT-1: 24"x24"x5/8" LAY-IN ACOUSTICAL CEILING - WHITE w/ WHITE ALUM. GRID
TYPE #2:	ACT-2: 24"x24"x5/8" LAY-IN ACOUSTICAL CEILING (VINYL COATED) - WHITE w/ WHITE ALUM. GRID
TYPE #3:	PREFINISHED METAL PANEL SOFFIT
TYPE #4:	PAINTED GYPSUM BOARD SOFFIT
TYPE #5:	EXPOSED PAINTED GYPSUM CEILING FASTENED TO UNDERSIDE OF STRUCTURE

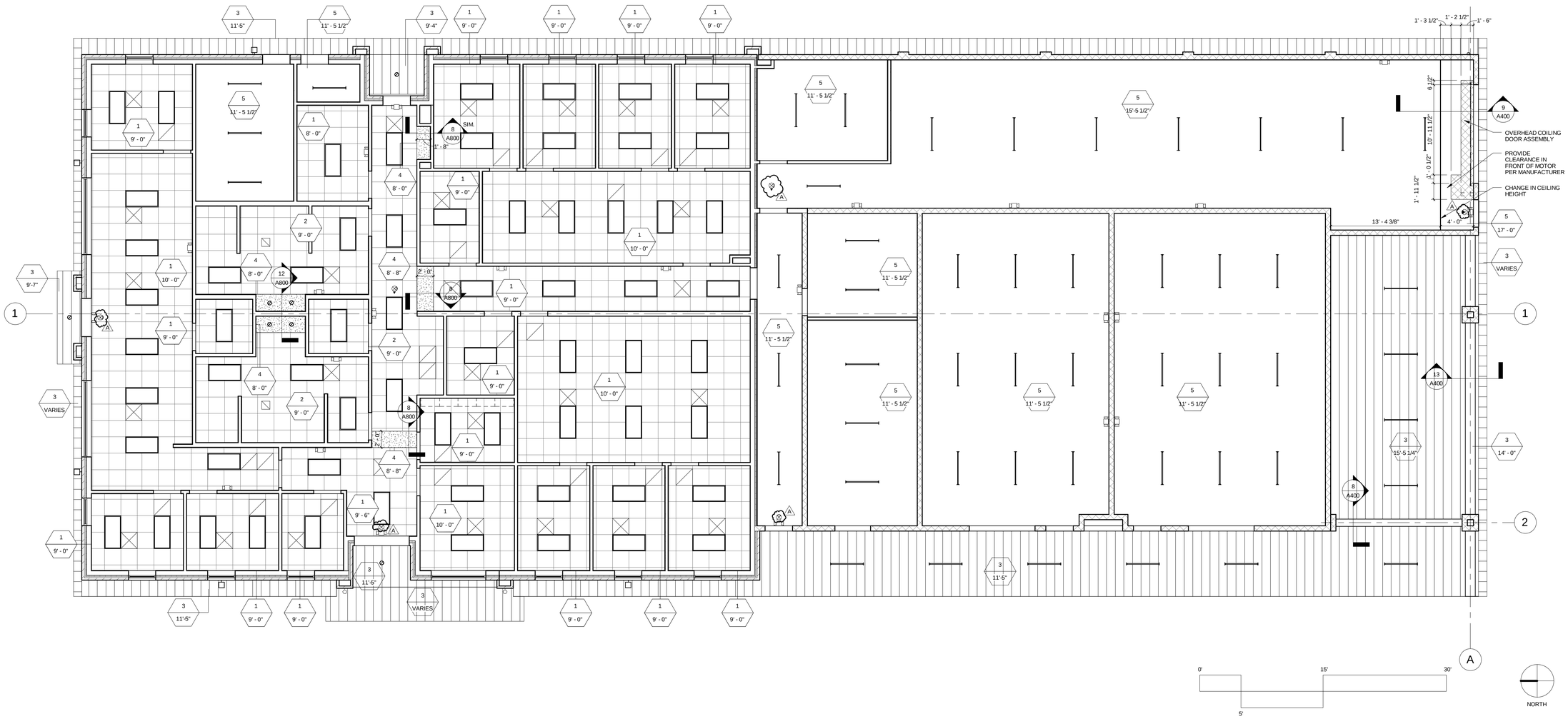

FIRST FLOOR REFLECTED CEILING PLAN | 3/16" = 1'-0" | 1

adwarchitects
environments for life
architecture planning interiors
101 WEST WORTHINGTON AVENUE
CHARLOTTE, NORTH CAROLINA 28203
P704.379.1919
F704.379.1920
www.adwarchitects.com

NCDOT Division 7: Roadside Environmental & Bituminous Unit Support Facility

Alamance County
Graham, NC

Construction Documents
Submittal SCO
#13-10060-01A

FIRST FLOOR REFLECTED CEILING PLAN AND DETAILS

DATE: May 08, 2015
PROJECT NO: 13070

REVISIONS

NO:	DATE:	DESCRIPTION:
A	05.08.15	SCO Review Comments

THIS DRAWING IS THE PROPERTY OF ADW ARCHITECTS, PA. AND SHALL NOT BE REPRODUCED OR COPIED IN WHOLE OR PART. IT SHALL NOT BE USED ON ANY OTHER PROJECT OR GIVEN TO ANY OTHER COMPANY OR AGENCY WITHOUT THE CONSENT IF ADW ARCHITECTS, PA.

SEAL
JAMES GILMORE POWELL
5454
REGISTERED ARCHITECT
NORTH CAROLINA
CHARLOTTE, N.C.
05 08. 15

SHEET NUMBER
A800

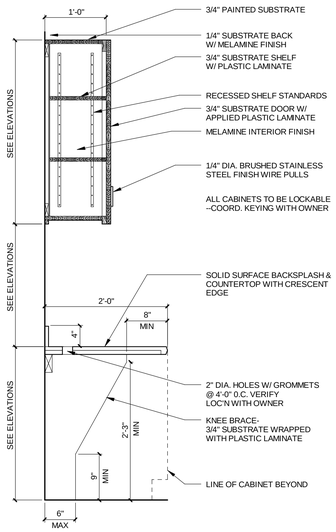

CASEWORK SECTION | 1" = 1'-0" | 15

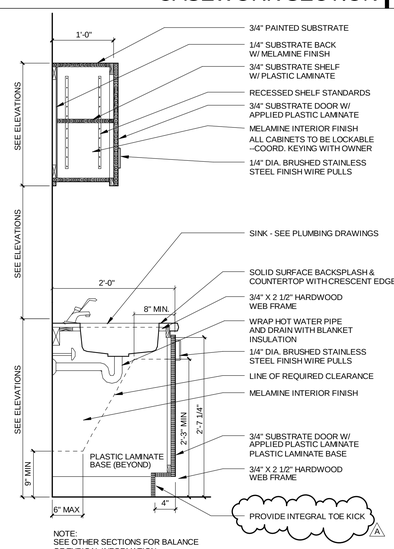

CASEWORK SECTION | 1" = 1'-0" | 14

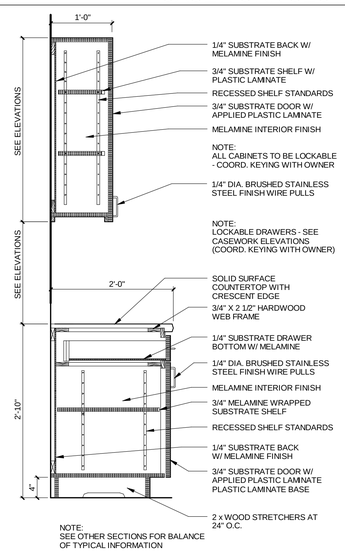

CASEWORK SECTION | 1" = 1'-0" | 13

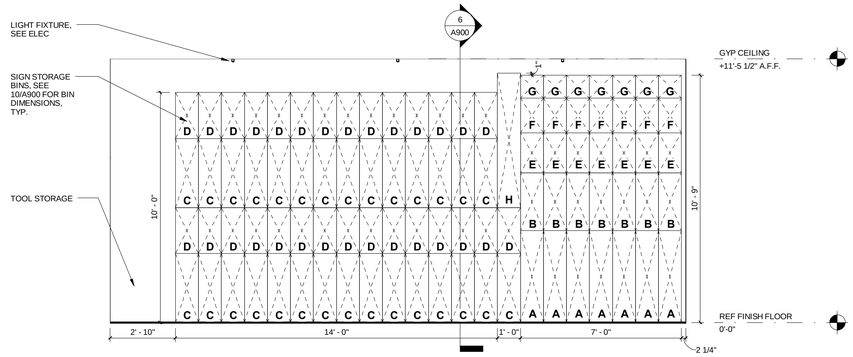

T.S. SIGN STOR ELEV B | 3/8" = 1'-0" | 8

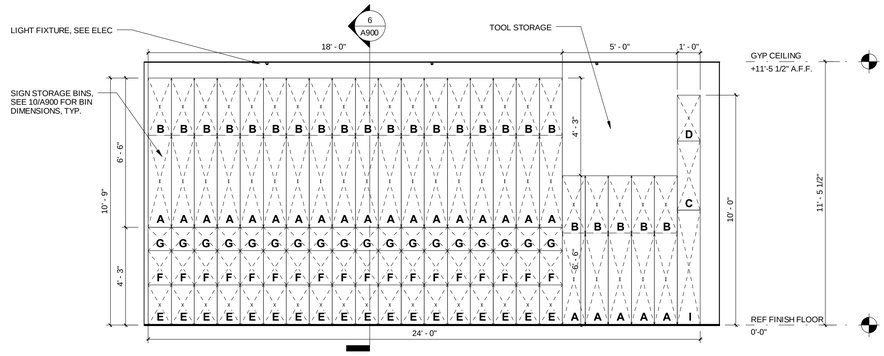

TS SIGN STOR ELEV A | 3/8" = 1'-0" | 7

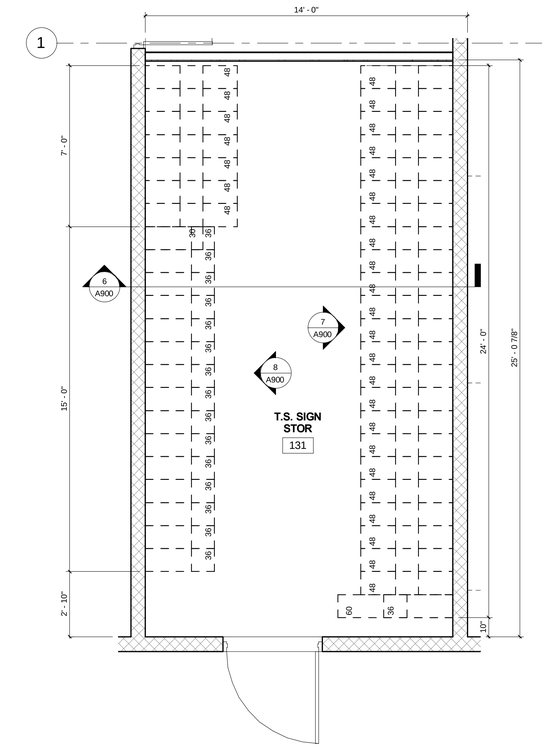

ENLARGED T.S. SIGN STOR | 3/8" = 1'-0" | 3

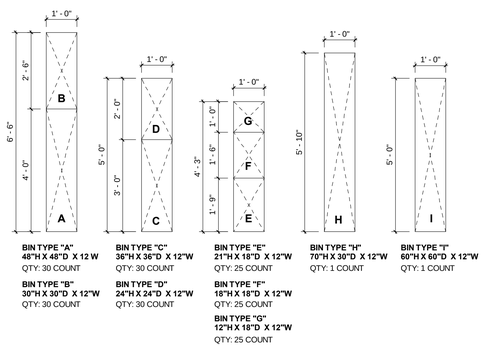

TS SIGN BIN ELEVATIONS | 1/2" = 1'-0" | 10

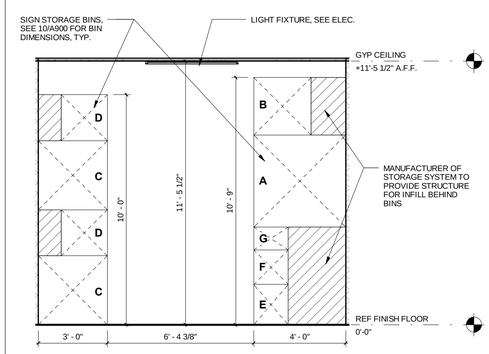

SECTION @ T.S. SIGN STOR | 3/8" = 1'-0" | 6

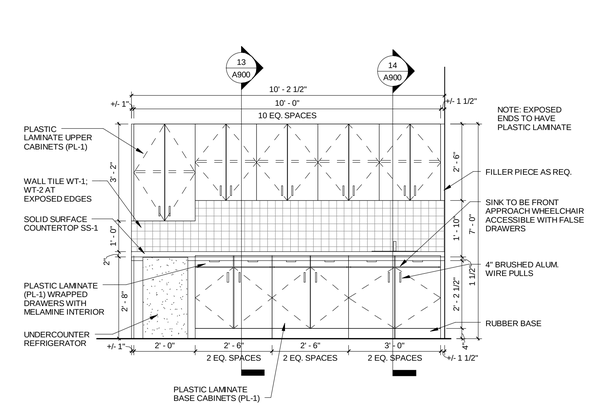

TYP. COFFEE BAR ELEVATION | 1/2" = 1'-0" | 2

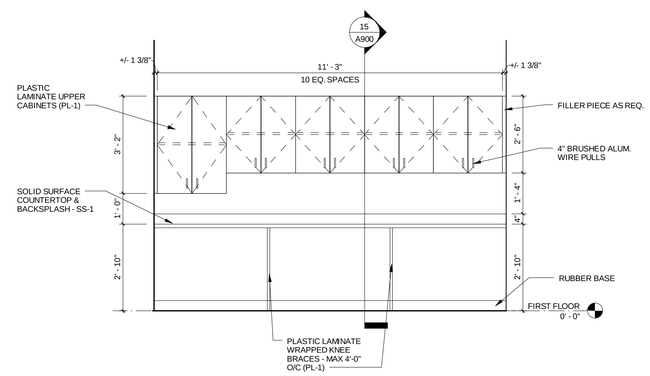

WORKROOM CASEWORK ELEVATION | 1/2" = 1'-0" | 5

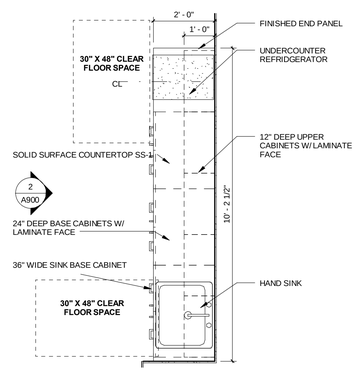

TYP. COFFEE BAR PLAN DETAIL | 1/2" = 1'-0" | 1

adwarchitects
environments for life
architecture planning interiors
101 WEST WORTHINGTON AVENUE
CHARLOTTE, NORTH CAROLINA 28203
P704.379.1919
F704.379.1920
www.adwarchitects.com

NCDOT Division 7: Roadside Environmental & Bituminous Unit Support Facility

Alamance County
Graham, NC

Construction Documents
Submittal SCO
#13-10060-01A

CASEWORK DETAILS

DATE: May 08, 2015
PROJECT NO: 13070

REVISIONS

NO:	DATE:	DESCRIPTION:
A	05.08.15	SCO Review Comments

THIS DRAWING IS THE PROPERTY OF ADW ARCHITECTS, PA. AND SHALL NOT BE REPRODUCED OR COPIED IN WHOLE OR PART. IT SHALL NOT BE USED ON ANY OTHER PROJECT OR GIVEN TO ANY OTHER COMPANY OR AGENCY WITHOUT THE CONSENT IF ADW ARCHITECTS, PA.

SEAL

JAMES GILMORE POWELL REGISTERED ARCHITECT 5454 NORTH CAROLINA CHARLOTTE, 15 26. 15

SHEET NUMBER

A900

GENERAL

1. THESE GENERAL NOTES ARE NOT INTENDED TO REPLACE SPECIFICATIONS. SEE SPECIFICATIONS FOR REQUIREMENTS IN ADDITION TO GENERAL NOTES.
2. THE STRUCTURAL DRAWINGS AND SPECIFICATIONS REPRESENT THE FINISHED STRUCTURE, AND, EXCEPT WHERE SPECIFICALLY SHOWN, DO NOT INDICATE THE METHOD OR MEANS OF CONSTRUCTION. THE CONTRACTOR SHALL SUPERVISE AND DIRECT THE WORK AND SHALL BE SOLELY RESPONSIBLE FOR ALL CONSTRUCTION MEANS, METHODS, PROCEDURES, TECHNIQUES, AND SEQUENCE. ALL APPLICABLE SAFETY REGULATIONS TO BE FOLLOWED STRICTLY.
3. THE STRUCTURE HAS BEEN DESIGNED TO RESIST DESIGN LOADS ONLY AS A COMPLETED STRUCTURE. APPLICATIONS OF CONSTRUCTION LOADS TO THE PARTIALLY COMPLETED STRUCTURE SHALL BE CONSIDERED BY THE CONTRACTOR AND SO INCLUDED IN THE DESIGN OF SHORING, BRACING, FORMWORK, AND ANY OTHER SUPPORTING ELEMENTS PROVIDED FOR CONSTRUCTION OF THE STRUCTURE. DURING ERECTION AND UNTIL ALL PERMANENT CONNECTIONS ARE MADE, THE CONTRACTOR MUST PROVIDE TEMPORARY BRACING FOR THE STRUCTURE IN ALL DIRECTIONS.
4. THE GENERAL CONTRACTOR SHALL CHECK AND VERIFY ALL DIMENSIONS AND GRADE CONDITIONS (BOTH NEW AND EXISTING), REPORTING ANY DISCREPANCIES TO THE ARCHITECT PRIOR TO ORDERING MATERIALS OR PROCEEDING WITH ANY PHASE OF THE WORK.
5. THE CONTRACTOR SHALL COMPARE STRUCTURAL SECTIONS WITH ARCHITECTURAL SECTIONS AND REPORT ANY DISCREPANCY TO THE ARCHITECT PRIOR TO FABRICATION OR INSTALLATION OF STRUCTURAL MEMBERS.
6. DO NOT SCALE DIMENSIONS FROM DRAWINGS. THE CONTRACTOR SHALL REQUEST, FROM THE ARCHITECT, NECESSARY DIMENSIONS NOT SHOWN ON THE DRAWINGS.
7. IF ANY BIDDER IS IN DOUBT AS TO THE INTENT OF THE PLANS OR SPECIFICATIONS, THEY SHALL REQUEST AN INTERPRETATION FROM THE ARCHITECT IN WRITING AT LEAST TEN (10) DAYS PRIOR TO THE SCHEDULED BID DATE.
8. PRINCIPAL OPENINGS IN THE STRUCTURE ARE SHOWN ON THESE DRAWINGS. THE GENERAL CONTRACTOR SHALL EXAMINE THE ARCHITECTURAL MECHANICAL, ELECTRICAL, AND PLUMBING DRAWINGS FOR REQUIRED OPENINGS AS THEY SHALL BE PROVIDED FOR WHETHER SHOWN ON THESE DRAWINGS OR NOT. GENERAL CONTRACTOR SHALL VERIFY SIZE AND LOCATION OF ALL OPENINGS WITH ALL SUB-CONTRACTORS PRIOR TO CONSTRUCTION.
9. SEE ARCHITECTURAL DRAWINGS FOR FLOOR ELEVATIONS, FLOOR SLOPES, AND THE LOCATION OF DEPRESSED FLOOR AREAS.
10. WHERE A CONFLICT BETWEEN DRAWINGS AND SPECIFICATIONS OCCUR THE MORE STRINGENT REQUIREMENT SHALL APPLY.
11. WHERE A DETAIL IS SHOWN FOR ONE CONDITION, IT SHALL APPLY FOR ALL LIKE OR SIMILAR CONDITIONS EVEN THOUGH NOT SPECIFICALLY REFERENCED ON THE DRAWINGS.

DESIGN CRITERIA

1. APPLICABLE CODES:
   - A. 2012 NORTH CAROLINA STATE BUILDING CODE (2009 INTERNATIONAL BUILDING CODE WITH REVISIONS)
   - B. MINIMUM DESIGN LOADS FOR BUILDINGS AND OTHER STRUCTURES (ASCE 7-05)
   - C. BUILDING CODE REQUIREMENTS FOR STRUCTURAL CONCRETE (ACI 318-08)
   - D. BUILDING CODE REQUIREMENTS FOR MASONRY STRUCTURES (ACI 530-08)
   - E. STEEL CONSTRUCTION MANUAL, 13TH EDITION (AISC 325-05)
   - F. SPECIFICATION FOR STRUCTURAL STEEL BUILDINGS (AISC 360-05)
   - G. AMERICAN WELDING SOCIETY STRUCTURAL WELDING CODE (D1.1-04)
   - H. NATIONAL DESIGN SPECIFICATION FOR WOOD CONSTRUCTION (NDS-05)
   - I. DESIGN OF COLD-FORMED STEEL STRUCTURAL MEMBERS (AISI S100-07)

2.	LIVE LOAD:	UNIFORM (PSF)	CONCENTRATED (LB)
	ROOF	20	300
3.	OCCUPANCY CATEGORY:	II	
4.	SNOW LOAD:		
	GROUND SNOW LOAD	Pg = 15 PSF	
	IMPORTANCE FACTOR	Is = 1.0	
	SNOW EXPOSURE FACTOR	Ce = 1.0	
	THERMAL FACTOR	Ct = 1.0	
	FLAT SNOW ROOF LOAD	Pf = 15 PSF	
5.	WIND LOAD:		
	BASIC DESIGN WIND VELOCITY	V = 90 MPH	
	IMPORTANCE FACTOR	Iw = 1.0	
	EXPOSURE CATEGORY	C	
	INTERNAL PRESSURE COEFFICIENTS	±0.18	
	BASE SHEAR	Vx = 11.8k	Vy = 31.8k
	COMPONENTS AND CLADDING - ALL BUILDING COMPONENTS AND CLADDING ENGINEERED BY THE COMPONENT MANUFACTURER ARE TO BE DESIGNED BY THE MANUFACTURER'S ENGINEER FOR WIND LOADS DETERMINED PER THE NORTH CAROLINA STATE BUILDING CODE FOR THE BASIC DESIGN WIND VELOCITY, IMPORTANCE FACTOR, AND EXPOSURE LISTED ABOVE.		
6.	SEISMIC LOAD (2008 USGS SEISMIC DESIGN MAPS):		
	DESIGN METHOD - EQUIVALENT LATERAL FORCE PROCEDURE		
	Ss	20.8 %g	
	S1	8.1 %g	
	Sds	16.6 %g	
	Sd1	9.1 %g	
	IMPORTANCE FACTOR	Ie = 1.0	
	SITE CLASS	C	
	SEISMIC RESPONSE COEFFICIENT	Csx = 0.047	Csy = 0.047
	SEISMIC DESIGN CATEGORY	B	
	SEISMIC FORCE-RESISTING SYSTEM - INTERMEDIATE REINFORCED MASONRY SHEAR WALLS AND LIGHT FRAMED WALLS WITH FLAT STRAP BRACING		
	RESPONSE MODIFICATION COEFFICIENT	Rx = 3.5	Ry = 3.5
	DEFLECTION AMPLIFICATION FACTOR	Cdx = 2.25	Cdy = 2.25
	BASE SHEAR	Vx = 11.3k	Vy = 11.3k
	NONSTRUCTURAL COMPONENT ANCHORAGE - ALL ARCHITECTURAL, ELECTRICAL, MECHANICAL, AND PLUMBING COMPONENTS ARE TO BE ATTACHED AS REQUIRED BY ASCE 7 CHAPTER 13, "SEISMIC DESIGN REQUIREMENTS FOR NONSTRUCTURAL COMPONENTS". EACH INDIVIDUAL CONTRACTOR RESPONSIBLE FOR THE COMPONENT MUST PROVIDE PROJECT SPECIFIC DESIGN AND DOCUMENTATION PREPARED BY AN ENGINEER LICENSED IN THE STATE OF NORTH CAROLINA. CHAPTER 13 DEFINES THE FORCE REQUIRED TO SUPPORT THE COMPONENT FOR THE ANCHORAGE AND BRACING. THE COST OF PREPARING THIS INFORMATION AND DESIGN SHALL BE INCLUDED IN EACH CONTRACTOR'S BID THAT IS PROVIDING THE COMPONENT.		
7.	FUTURE LOADS:		
	UNLESS SPECIFICALLY NOTED, THERE ARE NO PROVISIONS MADE FOR FUTURE FLOORS, ROOFS, OR OTHER LOADS.		

FOUNDATIONS

1. FOUNDATION DESIGN IS BASED ON THE GEOTECHNICAL INVESTIGATION REPORT BY FROEHLING & ROBERTSON, INC, DATED 10/31/2014. (NCDOT DIVISION 7 SUPPORT FACILITIES PROJECT #63S-0283). THE DESIGN ALLOWABLE SOIL BEARING PRESSURE IS 2,000 PSF, BASED ON THIS REPORT.
2. FOOTINGS SHALL BE CARRIED TO LOWER ELEVATIONS THAN THOSE SHOWN ON THE DRAWINGS IF REQUIRED BY THE GEOTECHNICAL ENGINEER OR TESTING LAB TO REACH SOIL CAPABLE OF PROVIDING THE DESIGN ALLOWABLE SOIL BEARING PRESSURE.
3. THE SUBGRADE AND UNDERFLOOR FILL SHALL BE PREPARED TO A POINT THAT EXTENDS 10'-0" MINIMUM BEYOND THE LIMITS OF THE FOUNDATION.
4. MINIMUM SUBGRADE PREPARATION REQUIREMENTS ARE AS FOLLOWS: COMPACT ALL FILL UNDER BUILDING TO 98% MAXIMUM DENSITY AS DETERMINED BY ASTM D698. PLACE IN LAYERS OF 8" MAXIMUM LOOSE THICKNESS. VERIFY FIELD DENSITY, ASTM D1556, WITH AT LEAST ONE TEST PER 2,000 SQUARE FEET PER LAYER. SEE SPECIFICATIONS FOR OTHER TESTING REQUIREMENTS.
5. WALLS RETAINING SOIL SHALL BE TEMPORARILY BRACED DURING BACKFILLING AND UNTIL ALL SUPPORTING SOIL AND SLABS ARE IN PLACE AND ARE AT DESIGN STRENGTH UNLESS NOTED OTHERWISE ON PLANS AND DETAILS.
6. UTILITY LINES SHALL NOT BE PLACED THROUGH OR BELOW FOUNDATIONS WITHOUT APPROVAL OF THE STRUCTURAL ENGINEER. CONTRACTOR SHALL SUBMIT DETAILED DRAWINGS OF ALL SUCH CONDITIONS PRIOR TO CONSTRUCTION.

CONCRETE/REINFORCING STEEL

1.	CONCRETE COMPRESSIVE STRENGTH IN 28 DAYS:		
	COLUMNS, BASEMENT WALLS, SITE WALLS	4,000 PSI, NORMAL WEIGHT	
	SLAB ON GRADE, FOOTINGS, GRADE BEAMS	3,000 PSI, NORMAL WEIGHT	
2.	REINFORCING:		
	TYPICAL - ASTM A615, GRADE 60		
	REINFORCING TO BE WELDED - ASTM A706 (INCLUDES DEFORMED BAR ANCHORS)		
	WELDED WIRE FABRIC - ASTM A185 (FLAT SHEETS ONLY)		
3.	GROUT UNDER BASE PLATES TO BE HIGH STRENGTH (5,000 PSI), NON-SHRINK.		
4.	REFER TO THE DRAWINGS FOR REINFORCING LAP REQUIREMENTS. WHERE LAP SPLICES ARE NOT SHOWN, LAP PER ACI 318 OR CRSI STANDARDS.		
5.	LAP WELDED WIRE FABRIC SHEETS 8" MINIMUM.		
6.	CLEAR COVER FROM FACE OF CONCRETE:		
	CAST IN PLACE CONCRETE (MEASURE TO OUTERMOST REINFORCING) -		
	CONCRETE CAST AGAINST AND EXPOSED TO EARTH	3"	
	CONCRETE EXPOSED TO EARTH/WEATHER	2" FOR #6 BARS AND LARGER	
		1 1/2" ELSE	
	CONCRETE NOT EXPOSED TO EARTH/WEATHER	3/4" FOR SLABS AND WALLS	
		1 1/2" FOR BEAMS AND COLUMNS (TO TIES)	
7.	PROVIDE REINFORCING IN SLABS ON GRADE, 1-1/2" FROM TOP OF SLAB:		
	4" SLABS	6x6-W2.1xW2.1	
	6" SLABS	#3@12"OC EACH WAY	

8. WHERE SCHEDULED BARS ARE NOT PRESENT, PROVIDE CONTINUOUS #5 TOP AND BOTTOM BARS TO SUPPORT STIRRUPS AS REQUIRED FOR THE LENGTH OF THE STIRRUP SPACING IN ALL BEAMS.
9. WALL FOOTING REINFORCING SHALL BE CONTINUOUS THROUGH ADJACENT COLUMN FOOTINGS.
10. PROVIDE VERTICAL DOVETAIL SLOTS AT 24"OC WITH TIES AT 16"OC VERTICALLY IN ALL CONCRETE WALLS BACKING-UP MASONRY VENEER.
11. BAR SUPPORTS FOR CONCRETE EXPOSED TO VIEW SHALL HAVE PLASTIC COATED LEGS OR BE HOT DIP GALVANIZED AFTER FABRICATION.
12. MECHANICAL AND ELECTRICAL CONDUIT IN SLABS ON GRADE AND ELEVATED SLABS SHALL RUN UNDER TOP LAYER OF SLAB REINFORCING. PROVIDE A MINIMUM OF 1-1/2" CLEAR BETWEEN CONDUITS AND BETWEEN REINFORCING AND ADJACENT CONDUITS PARALLEL TO REINFORCING. IF MAXIMUM SIZE OF CONDUIT EXCEEDS ONE THIRD OF THE SLAB DEPTH, ADDITIONAL FRAMING OR REINFORCING MAY BE NECESSARY AT ENGINEER'S DISCRETION.
13. MECHANICAL AND ELECTRICAL CONDUIT IN ELEVATED SLABS ON METAL DECK IS NOT ALLOWED UNLESS SPECIFICALLY REVIEWED AND APPROVED BY THE STRUCTURAL ENGINEER PRIOR TO PLACEMENT.
14. HEADED CONCRETE ANCHORS SHALL CONFORM TO THE REQUIREMENTS OF ASTM A108, GRADES 1010, 1015, 1017, OR 1020. STUDS SHALL BE AUTOMATICALLY END WELDED IN THE SHOP OR FIELD IN ACCORDANCE WITH THE MANUFACTURER'S RECOMMENDATIONS.
15. EMBED PLATES MUST BE SET IN THE FORM BEFORE POURING CONCRETE, NOT PLACED INTO TOP OF WET CONCRETE. THE CONTRACTOR SHALL CONTACT THE ARCHITECT FOR CORRECTIVE DETAILS FOR ANY EMBED PLATES LEFT OUT OF CONCRETE POURS.
16. FOR SLABS ON GRADE, SLAB AND FOOTING REINFORCING SHALL BE HELD IN PLACE BY BAR SUPPORTS WITH SAND PLATES, OR PRECAST CONCRETE BAR SUPPORTS AS DESCRIBED IN CHAPTER 3 OF THE CRSI MANUAL OF STANDARD PRACTICE. BAR SUPPORTS SHALL BE SPACED AT A MAXIMUM OF 4'-0"OC BOTH WAYS. ROCKS, CMU, OR CLAY BRICK WILL NOT BE USED AS SUPPORTS.
17. THE CONTRACTOR SHALL ASSUME CONCRETE OVERAGES IN ELEVATED DECK POURS DUE TO MEMBER AND DECK DEFLECTIONS. UNLESS SHOWN ON PLANS, BEAMS ARE NOT CAMBERED. CONCRETE OVERAGES MAY BE CALCULATED BY THE CONTRACTOR FOR BEAM DEFLECTIONS EQUALING L/300 INCLUDING ADDITIONAL DEFLECTIONS DUE TO PONDING AND DECK DEFLECTIONS PER SDI.
18. REBAR SHALL NOT BE HEATED WITH A TORCH IN THE FIELD.
19. THE CONTRACTOR SHALL NOTIFY THE ARCHITECT/ENGINEER FAR ENOUGH IN ADVANCE (48 HOURS) OF EACH CONCRETE POUR TO ALLOW AMPLE TIME TO CHECK THE LAYOUT OF THE STEEL BEFORE THE BEGINNING OF THE ACTUAL POUR, BUT NOT PRIOR TO 90% OF THE STEEL HAVING BEEN PLACED.

CONCRETE CONSTRUCTION JOINTS

1. CONTRACTOR SHALL PROVIDE NECESSARY CONSTRUCTION JOINTS IN MONOLITHIC CONCRETE POURS SO THAT THE QUALITY OF PLACEMENT AND FINISH MEETS THE REQUIREMENTS OF PLANS AND SPECIFICATIONS. THE CONTRACTOR SHALL SUBMIT A PLAN SHOWING THE LOCATION OF ALL CONSTRUCTION JOINTS TO THE STRUCTURAL ENGINEER FOR APPROVAL.
2. THERE SHALL BE NO HORIZONTAL CONSTRUCTION JOINTS IN CONCRETE POURS. ALL VERTICAL CONSTRUCTION JOINTS IN SLABS AND BEAMS SHALL BE MADE WITH BULKHEADS. ADDITIONAL REINFORCING AT CONSTRUCTION JOINTS SHALL BE AS SPECIFIED BY THE STRUCTURAL ENGINEER. SEE TYPICAL CONSTRUCTION JOINT DETAILS.

STRUCTURAL MASONRY

1. LOAD-BEARING MASONRY WALLS, PILASTERS, PIERS, RETAINING WALLS, FOUNDATION WALLS AND ANY OTHER MASONRY SO DESIGNATED ON DRAWINGS IS CONSIDERED HERE TO BE STRUCTURAL MASONRY.
2. REQUIRED COMPRESSIVE STRENGTH OF MASONRY UNITS:
   - SOLID CLAY UNITS - 6,200 PSI
   - CONCRETE UNITS - 1,900 PSI ON NET AREA
3. CONCRETE MASONRY UNITS (CMU) SHALL BE LIGHT WEIGHT (105 PCF) GRADE N, CONFORMING TO ASTM C90. REFER TO ARCHITECTURAL DRAWINGS AND SPECIFICATIONS FOR UNIT SIZE, FACE, COLOR, JOINTING, ETC.
4. MORTAR SHALL BE TYPE S, ASTM C270.
5. GROUT FOR REINFORCED MASONRY SHALL BE FINE GROUT, ASTM C476. MINIMUM 28-DAY COMPRESSIVE STRENGTH SHALL BE 2000 PSI.
6. MINIMUM 28-DAY COMPRESSIVE STRENGTH (f'm) OF THE MASONRY WALLS SHALL BE 1500 PSI. MASONRY STRENGTH SHALL BE DETERMINED BY THE UNIT STRENGTH METHOD OR THE PRISM TEST METHOD AS DESCRIBED BY ACI 530.
7. REINFORCING:
   - TYPICAL - ASTM A615, GRADE 60.
   - ALL REINFORCING TO BE WELDABLE - ASTM A706.
8. REFER TO THE DRAWINGS FOR REINFORCING LAP TYPICAL DETAIL AND SCHEDULE REQUIREMENTS. WHERE LAP SPLICES ARE NOT SHOWN, LAP 72 BAR DIAMETERS PER ACI 530 AS MODIFIED BY THE STATE BUILDING CODE, UNLESS NOTED ON DRAWINGS.
9. MAXIMUM HEIGHT TO WHICH MASONRY SHALL BE LAID BEFORE GROUTING IS 5 FEET ABOVE CONSTRUCTION SURFACE OR PREVIOUSLY GROUTED MASONRY. IF GROUT POUR HEIGHT EXCEEDS 5 FEET, THEN "HIGH LIFT" GROUTING PROCEDURE MUST BE FOLLOWED. PROVIDE CLEANOUT OPENINGS AT THE BOTTOM OF EACH GROUT LIFT. CLEANOUT OPENINGS SHALL BE PROVIDED AT EACH CELL TO BE FILLED WITH GROUT.
10. ALL GROUT PLACED OVER 12" IN HEIGHT SHALL BE MECHANICALLY CONSOLIDATED DURING GROUTING. GROUT SHALL BE RECONSOLIDATED BY MECHANICAL VIBRATION AFTER INITIAL WATER LOSS AND SETTLEMENT HAS OCCURRED.
11. MAXIMUM GROUT LIFT (GROUT POURED IN ONE CONTINUOUS OPERATION) IS 5 FEET. THIS LIMIT ALSO APPLIES TO "HIGH LIFT" GROUTING.
12. REINFORCE MASONRY WHERE SHOWN ON STRUCTURAL DRAWINGS. TIE REINFORCING IN POSITION AND PLACE GROUT AROUND REINFORCING. DO NOT PUSH REINFORCING DOWN INTO PREVIOUSLY PLACED GROUT FILL. SET BOLTS SIMILARLY.
13. TIE MASONRY WYTHES WITH HORIZONTAL REINFORCING AS SPECIFIED.
14. PROVIDE VERTICAL BARS, SIZE MATCHING WALL REINFORCING, AT ALL CORNERS, ENDS OF WALLS, EACH SIDE OF CONTROL JOINTS AND EACH SIDE OF WALL OPENINGS. TIE EACH BAR TO THE FOUNDATION WITH A MATCHING DOWEL. SEE ARCHITECTURAL DRAWINGS FOR LOCATIONS OF CONTROL JOINTS.
15. ALL CORNERS AND INTERSECTIONS OF STRUCTURAL MASONRY WALLS SHALL BE CONSTRUCTED BY INTERLOCKING COURSES.
16. ALL LINTELS TO BEAR 8" MINIMUM EACH SIDE OF OPENING, UNLESS NOTED OTHERWISE.
17. GROUT ALL MASONRY WALLS AND CAVITY BELOW GRADE SOLID. GROUT ALL WALLS ABOVE GRADE AT THE REINFORCED CELLS (MIN) OR AS INDICATED IN SPECIFIC SECTIONS.
18. ONE 3/4" DIAMETER (MAXIMUM) VERTICAL CONDUIT ALLOWED IN ANY REINFORCED CELL PROVIDED 1" CLEAR IS MAINTAINED BETWEEN REINFORCING AND CONDUIT. NO OTHER VERTICAL OR HORIZONTAL CONDUITS, PIPES, OR SLEEVES SHALL BE LOCATED IN REINFORCED CELLS UNLESS OTHERWISE APPROVED BY THE STRUCTURAL ENGINEER. CONTRACTOR SHALL COORDINATE LAYOUT TO AVOID REINFORCED CELLS.

STRUCTURAL STEEL

1. STRUCTURAL STEEL:
   - WIDE FLANGE SHAPES (W SECTIONS) - ASTM A992, GRADE 50 (FY=50 KSI)
   - CHANNELS, ANGLES, RODS, AND BARS - A36 (FY=36 KSI)
   - PLATES - ASTM A572, GRADE 50 (FY=50 KSI) OR ASTM A36 (FY=36 KSI)
   - SQUARE AND RECTANGULAR TUBES - ASTM A500, GRADE B (FY=46 KSI)
   - PIPES - ASTM A53, GRADE B (FY=35 KSI)
2. ANCHOR BOLTS AND THREADED RODS SHALL CONFORM TO ASTM F1554, GRADE 36.
3. DESIGN, FABRICATION AND ERECTION SHALL BE AS PER SPECIFICATION FOR STRUCTURAL STEEL BUILDINGS (AISC 360-05).
4. BEAM SIMPLE SHEAR CONNECTIONS NOT DETAILED ON STRUCTURAL DRAWINGS SHALL BE DESIGNED BY STEEL SUPPLIER FOR LOADS SHOWN ON DRAWINGS OR FOR REACTIONS DETERMINED BY USING THE ALLOWABLE UNIFORM LOAD AS TABULATED IN PART 3 OF THE AISC MANUAL OF STEEL CONSTRUCTION FOR THE SECTION, SPAN AND STRENGTH OF STEEL SPECIFIED. CONNECTIONS SHALL BE MADE WITH 3/4"☐ BOLTS, ASTM A325 TIGHTENED TO A SNUG-TIGHT CONDITION PER AISC REQUIREMENTS.
5. WHERE STEEL MEMBERS ARE WELDED AND NO SIZE IS SPECIFIED, PROVIDE FULL LENGTH FILLET WELDS BOTH SIDES OF MEMBER. WELD SIZES SHALL BE AS FOLLOWS UNLESS NOTED OTHERWISE:

MEMBER THICKNESS	WELD SIZE
3/16"	3/16"
1/4"	3/16"
5/16"	3/16"
3/8"	1/4"
7/16"	1/4"
1/2"	5/16"
9/16"	3/8"
5/8"	7/16"

6. SPLICING OF STRUCTURAL STEEL MEMBERS IS PROHIBITED WITHOUT PRIOR APPROVAL OF THE ENGINEER AS TO LOCATION AND TYPE OF SPLICE TO BE MADE. ANY MEMBER HAVING A SPLICE NOT SHOWN AND DETAILED ON SHOP DRAWINGS WILL BE REJECTED.
7. ALL WELDING SHALL CONFORM TO THE AMERICAN WELDING SOCIETY CODE. USE E70 SERIES ELECTRODES FOR ALL STRUCTURAL STEEL WELDS.
8. SEE THE ARCHITECTURAL AND STRUCTURAL DRAWINGS FOR ALL ITEMS REQUIRED TO BE HOT-DIP GALVANIZED AFTER FABRICATION.
9. STRUCTURAL STEEL SHALL BE PUNCHED FOR WOOD BLOCKING, NAILERS, CLIPS AND TIES IN ACCORDANCE WITH ARCHITECTURAL/STRUCTURAL DETAILS.
10. ULTRASONIC INSPECTION BY THE TESTING LABORATORY SHALL BE PROVIDED FOR ALL WELDS CALLED FOR ON THE STRUCTURAL DRAWINGS OR SHOP DRAWINGS AS FULL PENETRATION WELDS.
11. ALL STEEL EXPOSED TO VIEW SHALL BE CLASSIFIED AS ARCHITECTURALLY EXPOSED STRUCTURAL STEEL (AESS) AS DEFINED BY THE AISC CODE OF STANDARD PRACTICE AND SHALL BE TREATED AS SUCH.

NON-LOAD BEARING COLD ROLLED STEEL (METAL STUDS)

1. ALL METAL STUDS, HEADERS, AND ACCESSORIES SHALL BE MADE OF THE MINIMUM TYPE, SIZE, GAUGE, AND SPACING SHOWN ON DRAWINGS.
2. ALL STRUCTURAL MEMBERS SHALL BE MANUFACTURED IN ACCORDANCE WITH THE AMERICAN IRON AND STEEL INSTITUTE, "NORTH AMERICAN SPECIFICATION FOR THE DESIGN OF COLD-FORMED STEEL STRUCTURAL MEMBERS" (S100-07 & S200-07).
3. ALL THE COLD FORMED MEMBERS SHALL COME FROM A SINGLE MANUFACTURER; ONLY MANUFACTURERS WHO ARE MEMBERS OF THE STEEL STUD MANUFACTURERS ASSOCIATION (SSMA) OR THE STEEL FRAMING INDUSTRY ASSOCIATION (SFIA) WILL BE ACCEPTED. THE INSTALLATION SHALL COMPLY WITH THE MANUFACTURER'S RECOMMENDATIONS.
4. MINIMUM YIELD STRENGTH (FY) FOR STUDS IS 33 KSI FOR 18 GA (43 MILS) AND 20 GA (33 MILS) MATERIALS, AND 50 KSI FOR 12 GA (97 MILS), 14 GA (68 MILS), AND 16 GA (54 MILS) MATERIALS.
5. SUBMIT SHOP DRAWINGS FOR ALL LOAD BEARING COLD FORMED METAL FRAMING. SHOP DRAWINGS SHALL INDICATE PLACING OF ALL FRAMING MEMBERS SHOWING TYPE, SIZE, GAUGE, NUMBER, LOCATION AND SPACING. THEY SHALL ALSO INDICATE SUPPLEMENTAL STRAPPING, BRACING, SPLICES, BRIDGING, ACCESSORIES AND DETAILS REQUIRED FOR PROPER INSTALLATION.
6. SHOP DRAWINGS SHALL SHOW SIZE AND LENGTH OF WELDS FOR ALL WELDED CONNECTIONS AND TYPE, SIZE AND NUMBER OF SCREWS FOR ALL SCREWED CONNECTIONS. SUBMIT MANUFACTURER'S DATA GIVING STRENGTH VALUES FOR SCREWS USED.
7. ALL STUDS, TRACK, BRIDGING AND ACCESSORIES SHALL BE FORMED FROM STEEL HAVING A G-60 GALVANIZED COATING MEETING THE REQUIREMENTS OF ASTM A653 AND C955. ALL ACCESSORIES SHALL BE FORMED FROM STRUCTURAL QUALITY STEEL WITH MINIMUM YIELD STRENGTH OF 50 KSI.
8. A MINIMUM LENGTH OF 10" OF UNPUNCHED STEEL IS REQUIRED AT BOTH ENDS OF STUDS (NO PUNCHING HOLES OF ANY SIZE IS PERMITTED IN THESE 10 INCHES.) NO CUTTING OF THE STUD FLANGE IS PERMITTED.
9. BOTH STUD FLANGES SHALL BE ATTACHED TO THE TOP AND BOTTOM TRACK WITH (2) #10 SCREWS EACH SIDE.
10. SPLICES IN STUDS SHALL NOT BE PERMITTED UNLESS SPECIFICALLY DETAILED ONTHE STRUCTURAL DRAWINGS.
11. MULTIPLE STUD "COLUMNS" SHALL BE WELDED TOGETHER IN GROUPS OF AT LEAST TWO STUDS WITH 2" WELD TOP AND BOTTOM AND 1" WELD AT 24" O.C. BOTH SIDES IN BETWEEN.
12. TRACK SPLICES WITHIN A PANEL/WALL MUST BE SECURELY ANCHORED TO A COMMON ELEMENT (IE. STUD OR HEADER), OR BUTT-WELDED TOGETHER, OR SPLICED WITH STUD MATERIAL SECURELY FASTENED TO TRACK ON BOTH SIDES OF SPLICE.
13. LATERAL BRIDGING SHALL BE USED TO RESIST TORSIONAL FORCES IN THE LOAD-BEARING STUDS. BRIDGING SHALL BE 2-1/2"-18 GA (43 MILS) FLAT STRAPS, SCREW ATTACHED TO BOTH FLANGES OF EACH STUD WITH SOLID BLOCKING REQUIRED AT 8" O.C. MAX AND ADJACENT TO EACH OPENING. BLOCKING MAY BE MADE FROM MATCHING GAUGE STUDS ATTACHED WITH 16 GA (54 MILS) CLIP ANGLES WITH (2)#10 SCREWS INTO EACH FLANGE.
14. ACCEPTABLE BRIDGING ALTERNATE IS COLD ROLLED CHANNELS 1-1/2" CRC CHANNEL IN 3-5/8" OR 4" STUDS AND 2-1/2" CRC IN 6" STUDS WELDED TO THE OUTER EDGE OF PUNCHOUTS W/ 1/4" MIN WELD.
15. BRIDGING IS TO BE PLACED AT NO MORE THAN 4'-0" OC VERTICALLY.
16. INSTALL DOUBLE STUDS AT EVERY INTERRUPTION (IE. PLUMBING CHASES).
17. MINIMUM TRACK FASTENINGS SHALL BE 0.177" DIAMETER POWDER ACTUATED FASTENERS (PAFS) SPACED ON 16" OC FOR WALLS (UNO), WITH 1-1/2" MINIMUM PENETRATION INTO CONCRETE.
18. VOIDS BENEATH TRACK SHALL NOT BE PERMITTED. CONTRACTOR SHALL PROVIDE A LEVEL SLAB (WITHIN ACI 117 TOLERANCES, REFERENCE CONCRETE NOTES). WHERE UNEVENESS OF SUPPORTING FLOOR PREVENTS CONTINUOUS SOLID BEARING, PANEL OR TRACK SHALL BE LEVELED BY PLACING MORTAR OR GROUT BENEATH TRACK.
19. VERTICAL DEFLECTION CLIPS ARE REQUIRED TO BE CAPABLE OF ACCOMODATING UPWARD AND DOWNWARD VERTICAL DISPLACEMENT OF THE STRUCTURE THROUGH POSITIVE MECHANICAL ATTACHMENT TO STUD WEB. MECHANICAL ATTACHMENT TO STRUCTURE AND SCREW ATTACHMENT TO STUD WEB USING STEP-BUSHINGS TO PERMIT FRICTIONLESS VERTICAL MOVEMENT. CONNECTORS TO BE TESTED IN ACCORDANCE TO ICC AC621 CRITERIA AND HOLD A VALID ICC-ES EVALUATION SERVICE REPORT TO BE ACCEPTABLE.
20. HEADERS SHALL BE CONSTRUCTED OF UNPUNCHED STUDS. SHEAR SHALL BE TRANSFERRED BY FULL BEARING ON JACK STUDS OR BY SHEAR PLATES. SHEAR PLATES SHALL BE 16 GA (54 MILS) MINIMUM.
21. REFER TO ARCHITECTURAL PLANS FOR NON-LOAD BEARING WALLS.

SHEATHING

1. ALL SHEATHING SHALL BE OSB. ALL OSB SHEATHING, DIAPHRAGMS, AND SHEAR WALL PANELS SHALL CONFORM TO U.S. PRODUCT STANDARD PS-2-04.
2. SHEATHING SHEETS SHALL BE LAID WITH LONG DIMENSION PERPENDICULAR TO THE SUPPORTING FRAMING.
3. WOOD ROOF SHEATHING SHALL BE 9/16" EXTERIOR GRADE (INDEX 48/24) AND SHALL BE FASTENED WITH 8d NAILS @6"OC AT ALL EDGES AND 8d NAILS @12"OC IN PANEL FIELD. PROVIDE 2x4 BLOCKING OR CLIPS AT MIDSPAN AND AT ALL PANEL EDGES.

LOAD BEARING COLD ROLLED STEEL (METAL STUDS)

1. ALL LOAD BEARING STUDS, JOISTS, AND ACCESSORIES SHALL BE MADE OF THE MINIMUM TYPE, SIZE, GAUGE, AND SPACING SHOWN ON DRAWINGS.
2. ALL STRUCTURAL MEMBERS SHALL BE MANUFACTURED IN ACCORDANCE WITH THE AMERICAN IRON AND STEEL INSTITUTE, "NORTH AMERICAN SPECIFICATION FOR THE DESIGN OF COLD-FORMED STEEL STRUCTURAL MEMBERS" (S100-07 & S200-07).
3. ALL THE COLD FORMED MEMBERS SHALL COME FROM A SINGLE MANUFACTURER; ONLY MANUFACTURERS WHO ARE MEMBERS OF THE STEEL STUD MANUFACTURERS ASSOCIATION (SSMA) OR THE STEEL FRAMING INDUSTRY ASSOCIATION (SFIA) WILL BE ACCEPTED. THE INSTALLATION SHALL COMPLY WITH THE MANUFACTURER'S RECOMMENDATIONS.
4. MINIMUM YIELD STRENGTH (FY) FOR STUDS IS 33 KSI FOR 18 GA (43 MILS) AND 20 GA (33 MILS) MATERIALS, AND 50 KSI FOR 12 GA (97 MILS), 14 GA (68 MILS), AND 16 GA (54 MILS) MATERIALS.
5. SUBMIT SHOP DRAWINGS FOR ALL LOAD BEARING COLD FORMED METAL FRAMING. SHOP DRAWINGS SHALL INDICATE PLACING OF ALL FRAMING MEMBERS SHOWING TYPE, SIZE, GAUGE, NUMBER, LOCATION AND SPACING. THEY SHALL ALSO INDICATE SUPPLEMENTAL STRAPPING, BRACING, SPLICES, BRIDGING, ACCESSORIES AND DETAILS REQUIRED FOR PROPER INSTALLATION.
6. SHOP DRAWINGS SHALL SHOW SIZE AND LENGTH OF WELDS FOR ALL WELDED CONNECTIONS AND TYPE, SIZE AND NUMBER OF SCREWS FOR ALL SCREWED CONNECTIONS. SUBMIT MANUFACTURER'S DATA GIVING STRENGTH VALUES FOR SCREWS USED.
7. ALL STUDS, TRACK, BRIDGING AND ACCESSORIES SHALL BE FORMED FROM STEEL HAVING A G-60 GALVANIZED COATING MEETING THE REQUIREMENTS OF ASTM A653 AND C955.
8. A MINIMUM LENGTH OF 10" OF UNPUNCHED STEEL IS REQUIRED AT BOTH ENDS OF STUDS (NO PUNCHING HOLES OF ANY SIZE IS PERMITTED IN THESE 10 INCHES.) NO CUTTING OF THE STUD FLANGE IS PERMITTED.
9. LOAD BEARING WALLS MAY BE PRE-FABRICATED OFFSITE IN A PRE-PANELIZATION SHOP IN A CONTROLLED ENVIRONMENT WITH A CERTIFIED QUALITY CONTROL PROGRAM. THE FACILITY MUST HAVE A MINIMUM OF 2 YEARS OF OPERATION EXPERIENCE.
10. THE PANELIZER MUST SUBMIT FULLY DIMENSIONED WALL PANEL SHOP DRAWINGS OF EACH INDIVIDUAL WALL PANEL WITH THE MATERIALS EXPLICITLY CALLED OUT, AS WELL AS A FULLY DIMENSIONED PANEL LAYOUT DRAWING LOCATING EACH PANEL. THESE DRAWINGS MUST BE SUBMITTED FOR APPROVAL, AND WALL PANEL CONSTRUCTION SHALL NOT BEGIN UNTIL THE ENGINEER'S APPROVAL IS RECEIVED.
11. WALL PANELS MUST BE FABRICATED IN SHOP OR IN FIELD WITH WELDED CONNECTIONS. FIELD WELDING OF MATERIALS LESS THAN 18 GA (43 MILS) SHALL NOT BE PERMITTED. WELDS SHALL BE PERFORMED BY OPERATORS QUALIFIED IN ACCORDANCE WITH SECTION 6.0 OF THE AMERICAN WELDING SOCIETY'S "STRUCTURAL WELDING CODE - SHEET METAL" (AWS D1.3-98).
12. BOTH STUD FLANGES SHALL BE ATTACHED TO THE TOP AND BOTTOM TRACK WITH A 1" MINIMUM LENGTH OF WELD AT BEARING WALLS AND (2) #10 SCREWS EACH SIDE AT NON-BEARING WALLS.
13. ALL WELDS SHALL BE TOUCHED UP WITH ZINC-RICH PAINT.
14. SPLICES IN AXIALLY LOADED STUDS SHALL NOT BE PERMITTED.
15. STUDS SHALL HAVE FULL BEARING AGAINST THE INSIDE TRACK WEB TOP AND BOTTOM. STUDS MUST BE CUT SQUARE. THE PANELIZATION FACILITY MUST UTILIZE A COMPRESSION MECHANIZATION IN THEIR JIGS (IE. HYDRAULIC RAMS) TO FULLY SEAT THE STUDS IN THE TRACK PRIOR TO WELDING.
16. MULTIPLE STUD "COLUMNS" SHALL BE WELDED TOGETHER IN GROUPS OF AT LEAST TWO STUDS WITH 2" WELD TOP AND BOTTOM AND 1" WELD AT 24" O.C. BOTH SIDES IN BETWEEN.
17. TRACK SPLICES WITHIN A PANEL/WALL MUST BE SECURELY ANCHORED TO A COMMON ELEMENT (IE. STUD OR HEADER), OR BUTT-WELDED TOGETHER, OR SPLICED WITH STUD MATERIAL SECURELY FASTENED TO TRACK ON BOTH SIDES OF SPLICE.
18. LIGHT GAUGE STRAPS ON BOTH SIDES OF THE WALL ARE REQUIRED TO PROVIDE SHEAR RESISTANCE FOR SHEAR WALL FRAMING.
19. LATERAL BRIDGING SHALL BE USED TO RESIST TORSIONAL FORCES IN THE LOAD-BEARING STUDS. BRIDGING SHALL BE 2-1/2"-18 GA (43 MILS) FLAT STRAPS, SCREW ATTACHED TO BOTH FLANGES OF EACH STUD WITH SOLID BLOCKING REQUIRED AT 8" O.C. MAX AND ADJACENT TO EACH OPENING. BLOCKING MAY BE MADE FROM MATCHING GAUGE STUDS ATTACHED WITH 16 GA (54 MILS) CLIP ANGLES WITH (2)#10 SCREWS INTO EACH FLANGE.
20. ACCEPTABLE BRIDGING ALTERNATE IS COLD ROLLED CHANNELS 1-1/2" CRC CHANNEL IN 3-5/8" OR 4" STUDS AND 2-1/2" CRC IN 6" STUDS WELDED TO THE OUTER EDGE OF PUNCHOUTS W/ 1/4" MIN WELD.
21. BRIDGING IS TO BE PLACED AT NO MORE THAN 4'-0" OC VERTICALLY.
22. INSTALL DOUBLE STUDS AT EVERY INTERRUPTION (IE. PLUMBING CHASES).
23. MINIMUM TRACK FASTENINGS SHALL BE 0.177" DIAMETER POWDER ACTUATED FASTENERS (PAFS) SPACED ON 12" CENTERS FOR BEARING WALLS, AND AT 16" OC FOR NON-LOAD BEARING WALLS (UNO), WITH 1-1/2" MINIMUM PENETRATION INTO CONCRETE. AT STRAP WALLS, TRACK SHALL BE ATTACHED WITH 3" SPACINGS TO CONCRETE FLOORS, MIN.
24. VOIDS BENEATH TRACK SHALL NOT BE PERMITTED. CONTRACTOR SHALL PROVIDE A LEVEL SLAB (WITHIN ACI 117 TOLERANCES, REFERENCE CONCRETE NOTES). WHERE UNEVENESS OF SUPPORTING FLOOR PREVENTS CONTINUOUS SOLID BEARING, PANEL OR TRACK SHALL BE LEVELED BY PLACING MORTAR OR GROUT BENEATH TRACK.
25. HEADERS SHALL BE CONSTRUCTED OF UNPUNCHED STUDS. SHEAR SHALL BE TRANSFERRED BY FULL BEARING ON JACK STUDS OR BY SHEAR PLATES. SHEAR PLATES SHALL BE 16 GA (54 MILS) MINIMUM.
26. CUTTING OF LOAD-BEARING METAL STUDS, TRACK, OR X-STRAPPING IS NOT PERMITTED WITHOUT SPECIFIC APPROVAL FROM THE ENGINEER OF RECORD.
27. MULTIPLE STUD COLUMNS WITHOUT LATERAL BRACING MUST BE 12 GA (97 MILS) MINIMUM, REGARDLESS OF GAUGES INDICATED ON FRAMING PLANS.
28. REFER TO ARCHITECTURAL PLANS FOR NON-LOAD BEARING WALLS AND TO VERIFY ALL DIMENSIONS SHOWN FOR LOAD BEARING WALLS.

PREFABRICATED WOOD TRUSSES

1. PREFABRICATED ROOF TRUSS MANUFACTURER SHALL SUBMIT CALCULATIONS AND TRUSS LAYOUT OR FRAMING PLAN TO SECURE APPROVALS FROM ARCHITECT AND BUILDING DEPARTMENT PRIOR TO ERECTION.
2. ALL LUMBER AND ITS FASTENINGS SHALL CONFORM TO THE NATIONAL DESIGN SPECIFICATION FOR WOOD CONSTRUCTION, LATEST EDITION, BY THE AMERICAN FOREST AND PAPER ASSOCIATION. CONFORM TO APPLICABLE PROVISIONS OF TPI DESIGN SPECIFICATIONS FOR METAL PLATE CONNECTED WOOD TRUSSES (LATEST EDITION).
3. DESIGN SHALL CONSIDER LOADS INDICATED AS WELL AS ALL MECHANICAL EQUIPMENT AND CEILING SOFFIT CONSTRUCTION SHOWN ON THE ARCHITECTURAL DRAWINGS.
4. TRUSSES SHALL BE DESIGNED FOR THE FOLLOWING MINIMUM LOADS:

TOP CHORD	DL = 10 PSF (AT ROOF)
	DL = 20 PSF (AT FLOOR)
	LL = 20 PSF (AT ROOF)
	LL = PER CODE (AT FLOOR)
BOTTOM CHORD	DL = 10 PSF
	DL = 350 LB AT ANY POINT (SPRINKLER PIPE)

5. TRUSS SUPPLIER SHALL CALCULATE UPLIFT LOADS BASED ON THE WIND LOAD CRITERIA LISTED IN THESE GENERAL NOTES. AT A MINIMUM THE NET WIND UPLIFT LOAD SHALL BE 15 PSF.
6. TRUSS CHORDS AND WEBS SHALL BE DOUGLAS FIR OR SOUTHERN PINE, PS 20, GRADED TO NFPA RULES:
   - MAXIMUM MOISTURE CONTENT - 19%
   - MINIMUM GRADE OF CHORD - NO. 2
   - MINIMUM GRADE OF WEB MEMBERS - NO. 3
7. ALL TRUSSES SHALL BE DESIGNED FOR THE ACTUAL DEAD LOAD PLUS LIVE LOAD (SPECIFIED ABOVE). MAXIMUM DEFLECTION DUE TO LIVE LOAD ONLY SHALL NOT EXCEED L/360. MAXIMUM DEFLECTION DUE TO TOTAL LOAD SHALL NOT EXCEED L/240. ROOF SLOPE SHALL BE 1/4" PER FOOT OR GREATER AFTER LONG TERM DEFLECTION OCCURS.
8. SUBMIT SHOP DRAWINGS FOR ALL TRUSSES. SHOP DRAWINGS SHALL INDICATE PLACING OF ALL FRAMING MEMBERS SHOWING TYPE, SIZE, NUMBER, LOCATION AND SPACING. THEY SHALL ALSO INDICATE SUPPLEMENTAL BRACING, SPLICES, BRIDGING, ACCESSORIES AND DETAILS REQUIRED FOR PROPER INSTALLATION. SHOP DRAWINGS SUBMITTED MUST BE PREPARED UNDER THE SUPERVISION OF AND SEALED BY A REGISTERED PROFESSIONAL ENGINEER LICENSED IN THE STATE IN WHICH THE PROJECT IS LOCATED.
9. TRUSS MANUFACTURER SHALL PROVIDE A TRUSS LAYOUT PLAN INDICATING ALL TRUSSES WITH PIECE MARKS AND DIMENSIONS. THIS DRAWING SHALL BE SEALED BY THE TRUSS ENGINEER. THEIR SEAL SHALL ONLY ATTEST TO THE PERFORMANCE OF THE TRUSSES, THEIR CONNECTIONS TO ONE ANOTHER (GIRDER TRUSSES, MULTI-PLY, PIGGY-BACK, VALLEY, ETC) AND THAT ALL NOTED DESIGN LOADS HAVE BEEN ACCOUNTED FOR IN THE DESIGN OF THE TRUSSES. IT IS NOT THE INTENT THAT THE TRUSS ENGINEER BE RESPONSIBLE FOR LOAD PATH BELOW THE BEARING ELEVATION UNLESS CHANGES TO THE TRUSS LAYOUT ARE MADE RELATIVE TO THE CONTRACT DOCUMENTS.
10. ALL TRUSSES AND CONNECTIONS SHALL BE DESIGNED BY THE SUPPLIER'S ENGINEER. SUBMIT CALCULATIONS FOR ALL TRUSSES AND THEIR CONNECTIONS. CALCULATIONS SHALL INCLUDE ALL DESIGN LOADS, MAXIMUM AXIAL TENSION AND COMPRESSION IN TRUSS MEMBERS, CALCULATED MAXIMUM DEFLECTIONS AND SPAN-TO-DEFLECTION RATIOS FOR LIVE AND TOTAL LOADS, AND REACTION FORCES AND DIRECTIONS, INCLUDING MAXIMUM UPLIFT REACTION FORCES.
11. ALL TRUSSES SHALL BE BRACED TO PREVENT ROTATION AND PROVIDE LATERAL STABILITY. SHOP DRAWINGS SHALL INDICATE ALL LATERAL BRIDGING REQUIRED WHICH SHALL BE SUPPLIED BY THE CONTRACTOR.
12. TRUSS SHOP DRAWINGS SHALL INCLUDE PERMANENT INDIVIDUAL TRUSS MEMBER RESTRAINT REQUIREMENTS CLEARLY NOTED ON THE LAYOUT DRAWING. (A)
13. GABLE ENDWALL TRUSSES SHALL BE DESIGNED FOR THE COMPONENTS AND CLADDING LOADS OF 20 PSF. DEFLECTION OF THE VERTICAL SUPPORT MEMBERS SHALL BE LESS THAN L/360. SUPPLY BRACING AS REQUIRED FOR LOADS AND DELFECTION. SEALED CALCULATIONS SHALL BE PROVIDED BY THE TRUSS ENGINEER FOR ALL GABLE ENDWALL TRUSSES.
14. ALL BRACING MATERIAL SHALL BE A MINIMUM 2X4 SPRUCE PINE FIR NO 2 OR BETTER ANCHORED WITH AT LEAST (2) 16d NAILS AT EACH TRUSS.
15. IF PERMANENT TRUSS RESTRAINT/BRACING FOR TOP, BOTTOM AND WEB MEMBERS ARE NOT DETAILED ON THE TRUSS LAYOUT DRAINGS, THEN BRACING SHALL BE IN ACCORDANCE WITH BCSI-B3 OR BCSI-B7 FOR PARALLEL CHORD TRUSSES.
16. TEMPORARY BRACING, WHERE REQUIRED, SHALL BE PROVIDED UNTIL THE ERECTION IS COMPLETE.
17. TRUSS SPANS OF 60 FEET OR GREATER REQUIRE THE TRUSS ENGINEER TO PROVIDE PROJECT SPECIFIC DESIGN FOR THE TEMPORARY INSTALLATION RESTRAINT/ BRACING AND THE PERMANENT INDIVIDUAL TRUSS MEMBER RESTRAINT/BRACING. ALL BRACING MUST BE INDICATED ON THE TRUSS LAYOUT DRAWING.

ADHESIVE AND MECHANICAL POST-INSTALLED ANCHORS

1. ANCHOR BOLTS, REINFORCING STEEL, THREADED RODS, STAIR HANDRAILS, AND OTHER EMBEDDED STEEL ITEMS SHALL BE SET INTO HARDENED CONCRETE WITH ADHESIVE OR MECHANICAL POST-INSTALLED ANCHOR ONLY WHERE DETAILED ON THE DRAWINGS OR WHERE APPROVED BY THE ENGINEER.
2. PRE-APPROVED MANUFACTURERS ARE HILTI, SIMPSON STRONG-TIE, AND POWERS. WHERE DETAILS INDICATE SPECIFIC ADHESIVE OR MECHANICAL POST-INSTALLED ANCHORS, IT IS ACCEPTABLE AT THE CONTRACTOR'S OPTION TO SUBMIT AN ALTERNATE SIMILAR PRODUCT PROVIDED BY A DIFFERENT MANUFACTURER AS LONG AS THE MANUFACTURER'S DATA PROVIDES EQUIVALENT LOAD CAPACITY TO THE ANCHOR SPECIFIED.
3. MANUFACTURER'S DATA FOR ALL ADHESIVE AND MECHANICAL POST-INSTALLED ANCHORS SHALL BE SUBMITTED TO THE ENGINEER FOR APPROVAL PRIOR TO INSTALLATION. SUBMITTALS FOR ADHESIVE ANCHOR PRODUCTS SHALL INCLUDE ICC-ES EVALUATION REPORTS. STRICTLY FOLLOW THE MANUFACTURER'S SPECIFICATIONS AND INSTALLATION INSTRUCTIONS. HEED ALL LABEL WARNINGS. INSTALL IN ACCORDANCE WITH APPLICABLE SAFETY LAWS.
4. ALL HOLES SHALL BE DRILLED WITH A DIAMETER NO LARGER THAN 1/8" GREATER THAN THE DIAMETER OF THE STEEL MEMBER BEING INSTALLED.
5. ALL HOLES SHALL BE CLEANED WITH COMPRESSED AIR AND SHALL BE DRY PRIOR TO INSTALLATION OF ADHESIVE. HOLES SHALL BE FREE OF ALL DELETERIOUS MATERIAL SUCH AS LAITANCE, DUST, DIRT, AND OIL.
6. CONTRACTOR PERFORMING ADHESIVE WORK SHALL BE AN APPROVED CONTRACTOR BY THE MANUFACTURER FURNISHING THE ADHESIVE MATERIALS, AND SHALL HAVE NO LESS THAN FIVE YEARS EXPERIENCE IN THE VARIOUS TYPES OF ADHESIVE RELATED WORK REQUIRED IN THIS PROJECT. A CERTIFICATION FROM THE MANUFACTURER ATTESTING TO THE TRAINING SHALL BE SUBMITTED TO THE ENGINEER/ARCHITECT ALONG WITH THE PROPOSAL TO DO THE WORK.
7. WHERE ADHESIVE ANCHORS ARE TO BE INSTALLED IN HOLLOW MATERIAL WITH UNKNOWN CAPACITY, THE CONTRACTOR SHALL INSTALL THE ANCHOR IN STRICT ACCORDANCE WITH MANUFACTURER'S INSTRUCTIONS.
8. THE ADHESIVE SHALL BE INSTALLED IN THE HOLLOW BASE MATERIAL USING SCREEN TUBES SUPPLIED BY THE MANUFACTURER. THE ADHESIVE SHALL BE CAPABLE OF SUSTAINING MINIMUM TENSION AND SHEAR LOAD CAPACITIES NOTED ON THE DRAWINGS MULTIPLIED BY A FACTOR OF SAFETY OF 4. ALL HARDWARE AND MATERIAL SHALL BE SUPPLIED BY THE ANCHOR MANUFACTURER.
9. THE ULTIMATE TENSION AND SHEAR CAPACITIES SHALL BE DETERMINED BY A JOB SITE TEST PERFORMED ON A MINIMUM OF FIVE INSTALLED SAMPLES WHICH ARE REPRESENTATIVE OF THE ACTUAL INSTALLATIONS. TESTING SHALL BE PERFORMED BY THE ADHESIVE ANCHOR MANUFACTURER OR HIS APPROVED REPRESENTATIVE AND SHALL BE DOCUMENTED FOR THE DESIGN PROFESSIONAL.

REPRODUCTION

1. THE USE OF REPRODUCTIONS OF THESE CONTRACT DRAWINGS BY ANY CONTRACTOR, SUBCONTRACTOR, ERECTOR, FABRICATOR, OR MATERIAL SUPPLIER IN LIEU OF PREPARATION OF SHOP DRAWINGS SIGNIFIES HIS ACCEPTANCE OF ALL INFORMATION SHOWN HEREIN AS CORRECT, AND OBLIGATES HIMSELF TO ANY JOB EXPENSE, REAL OR IMPLIED, ARISING DUE TO ANY ERRORS THAT MAY OCCUR HERE ON.

ABBREVIATIONS

@	AT
&	AND
☐	DIAMETER
AB	ANCHOR BOLTS
ACI	AMERICAN CONCRETE INSTITUTE
ADDL	ADDITIONAL
AFF	ABOVE FINISHED FLOOR
AISC	AMERICAN INSTITUTE OF STEEL CONSTRUCTION
AISI	AMERICAN IRON AND STEEL INSTITUTE
ALT	ALTERNATE
ARCH	ARCHITECT'S / ARCHITECTURAL
ASTM	AMERICAN SOCIETY FOR TESTING AND MATERIALS
AWS	AMERICAN WELDING SOCIETY
B/ or BOT	BOTTOM
BCX	BOTTOM CHORD EXTENSION
BFF	BELOW FINISHED FLOOR
BLDG	BUILDING
BM	BEAM
BOS	BOTTOM OF STEEL
BRG	BEARING
BTWN	BETWEEN
CANT	CANTILEVER
CJ	CONTROL JOINT
CL	CENTERLINE
CLR	CLEAR
CMU	CONCRETE MASONRY UNIT
COL	COLUMN
CONC	CONCRETE
CONN	CONNECTION
CONST JT	CONSTRUCTION JOINT
CONT	CONTINUOUS
CONTR	CONTRACTOR
COORD	COORDINATE
CTRD	CENTERED
d	NAILS (PENNY)
DBA	DEFORMED BAR ANCHOR
DEFL	DEFLECTION
DEPR	DEPRESSION / DEPRESSED
DET	DETAIL
DIAG	DIAGONAL
DIM	DIMENSION
DIST	DISTANCE
DWG(S)	DRAWING(S)
DWL(S)	DOWEL(S)
EA	EACH
EE	EACH END
EF	EACH FACE
EJ	EXPANSION JOINT
ELEV	ELEVATION
EMBED	EMBEDDED / EMBEDMENT
ENGR	ENGINEER
EOD	EDGE OF DECK
EOS	EDGE OF SLAB
EQ	EQUAL
EQUIP	EQUIPMENT
EW	EACH WAY
EXIST	EXISTING
EXP	EXPANSION
EXT	EXTERIOR
FDN	FOUNDATION
FFE	FINISHED FLOOR ELEVATION
FOM	FACE OF MASONRY
FOW	FACE OF WALL
FS	FAR SIDE
FTG	FOOTING
GA	GAUGE
GALV	GALVANIZED
HD	HEADED
HI	HIGH
HORIZ	HORIZONTAL
HSS	HOLLOW STRUCTURAL SECTION
INT	INTERIOR
JT	JOINT
K	KIP(S)
KB	KNEE BRACE
KSI	KIPS PER SQUARE INCH
LB	LONG BAR
LBS	POUNDS
LLH	LONG LEG HORIZONTAL
LLV	LONG LEG VERTICAL
LO	LOW
LOC	LOCATION
LWC	LIGHT WEIGHT CONCRETE
MAX	MAXIMUM
MC	MOMENT CONNECTION
MECH	MECHANICAL
MFR	MANUFACTURER
MID	MIDDLE
MIN	MINIMUM
MISC	MISCELLANEOUS
MOW	MIDDLE OF WALL
MP	MASONRY PILASTER
No or #	NUMBER
NS	NEAR SIDE
NTS	NOT TO SCALE
NWC	NORMAL WEIGHT CONCRETE
OC	ON CENTER
OPNG	OPENING
OPP	OPPOSITE HAND
PAF	POWDER ACTUATED FASTENER
PED	PEDESTAL
PL	PLATE
PSF	POUNDS PER SQUARE FOOT
PSI	POUNDS PER SQUARE INCH
PT	PRESSURE TREATED
P-T	POST-TENSIONED
REF	REFERENCE
REINF	REINFORCING
REQD	REQUIRED
SB	SHORT BAR
SCHD	SCHEDULE
SIM	SIMILAR
SOG	SLAB ON GRADE
SPEC(S)	SPECIFICATION(S)
SQ	SQUARE
STD	STANDARD
STIFF	STIFFENER
STIRR	STIRRUP(S)
STL	STEEL
STR	STRUCTURAL
T/	TOP
TCX	TOP CHORD EXTENSION
TOC	TOP OF CONCRETE
TOF	TOP OF FOOTING
TOS	TOP OF STEEL
TOW	TOP OF WALL
TYP	TYPICAL
UNO	UNLESS NOTED OTHERWISE
VERT	VERTICAL
VIF	VERIFY IN FIELD
W/	WITH
WWF	WELDED WIRE FABRIC
WP	WORK POINT

adwarchitects
environments for life
architecture planning interiors
101 WEST WORTHINGTON AVENUE
CHARLOTTE,NORTH CAROLINA 28203
P704.379.1919
F704.379.1920
www.adwarchitects.com

STEWART
200 S COLLEGE ST
SUITE 270
CHARLOTTE, NC 28202
T 704.334.7925
FIRM LICENSE #C-1051
PROJECT #R14053

NCDOT Division 7: Roadside Environmental & Bituminous Unit Support Facility

Alamance County
Graham, NC

Construction Documents
Submittal SCO
#13-10060-01A

GENERAL NOTES & ABBREVIATIONS

DATE: March 10, 2015
PROJECT NO: 13070

REVISIONS:

NO:	DATE:	DESCRIPTION:
A	05.08.15	SCO Review Comments

THIS DRAWING IS THE PROPERTY OF ADW ARCHITECTS. PA. AND SHALL NOT BE REPRODUCED OR COPIED IN WHOLE OR PART. IT SHALL NOT BE USED ON ANY OTHER PROJECT OR GIVEN TO ANY OTHER COMPANIY OR AGENCY WITHOUT THE CONSENT IF ADW ARCHITECTS, PA.

SEAL
NORTH CAROLINA PROFESSIONAL SEAL 26465 ENGINEER LANCE D. WILLIAMS
05/08/2015

SHEET NUMBER
S001

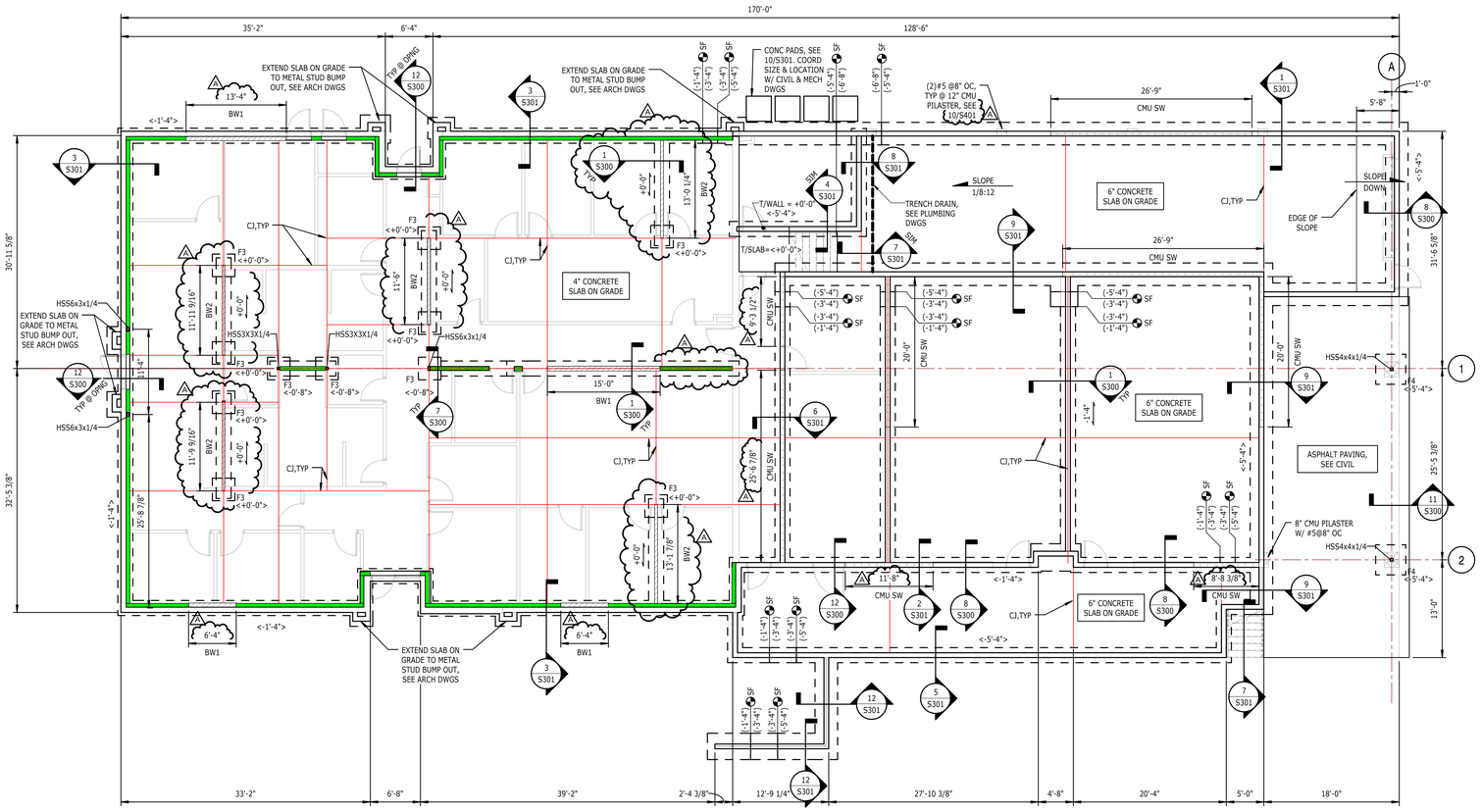

1 FOUNDATION PLAN
S100

1/8" = 1'-0"

NOTES:
1. FOR GENERAL NOTES AND ABBREVIATIONS, SEE S001.
2. FINISHED FLOOR ELEVATION 0'-0", UNO. REFERENCE ELEVATION 572.00' AND 576.00'.
3. No INDICATES DEPRESSED OR RAISED SLAB ELEVATION, SEE PLAN.
4. TOP OF FOOTING 1'-4" BELOW FINISHED FLOOR ELEVATION, UNO. <No> INDICATES TOP OF FOOTING ELEVATION, SEE PLAN.
5. INDICATES STEP IN WALL FOOTING, SEE 5/S300.
6. "F#" INDICATES FOOTING TYPE, SEE 2/S300.
7. FOR TYPICAL SLAB CONSTRUCTION DETAILS, SEE 1/S300..
8. CONTRACTOR TO COORDINATE ALL THICKENED SLAB LOCATIONS UNDER CMU PARTITIONS WITH ARCHITECTURAL DRAWINGS.
9. "CMU SW" INDICATES MASONRY SHEAR WALL, SEE S302 AND S303 FOR MASONRY DETAILS.
10. "BW#" INDICATES METAL STUD BRACE WALL, SEE S402 AND S403 FOR METAL STUD DETAILS.
11. FOR COLUMN BASE PLATES AND ANCHOR BOLTS, SEE 6/S300.

0' 4' 8' 16' 32'

WALL LEGEND
- LOAD BEARING METAL STUD WALL
- METAL STUD STRAP WALL
- MASONRY SHEAR WALL

adwarchitects
environments for life
architecture planning interiors

101 WEST WORTHINGTON AVENUE
CHARLOTTE, NORTH CAROLINA 28203
P704.379.1919
F704.379.1920
www.adwarchitects.com

STEWART
200 S COLLEGE ST
SUITE 270
CHARLOTTE, NC 28202
T 704.334.7925
FIRM LICENSE #C-1051
PROJECT #R14053

NCDOT Division 7: Roadside Environmental & Bituminous Unit Support Facility

Alamance County
Graham, NC

Construction Documents
Submittal SCO
#13-10060-01A

FOUNDATION PLAN

DATE: March 10, 2015
PROJECT NO: 13070

REVISIONS:

NO:	DATE:	DESCRIPTION:
A	05.08.15	SCO Review Comments

THIS DRAWING IS THE PROPERTY OF ADW ARCHITECTS, PA. AND SHALL NOT BE REPRODUCED OR COPIED IN WHOLE OR PART. IT SHALL NOT BE USED ON ANY OTHER PROJECT OR GIVEN TO ANY OTHER COMPANY OR AGENCY WITHOUT THE CONSENT IF ADW ARCHITECTS, PA.

SEAL

NORTH CAROLINA PROFESSIONAL SEAL 26465 ENGINEER VINCE DIMITELLIAN

05/08/2015

SHEET NUMBER

S100

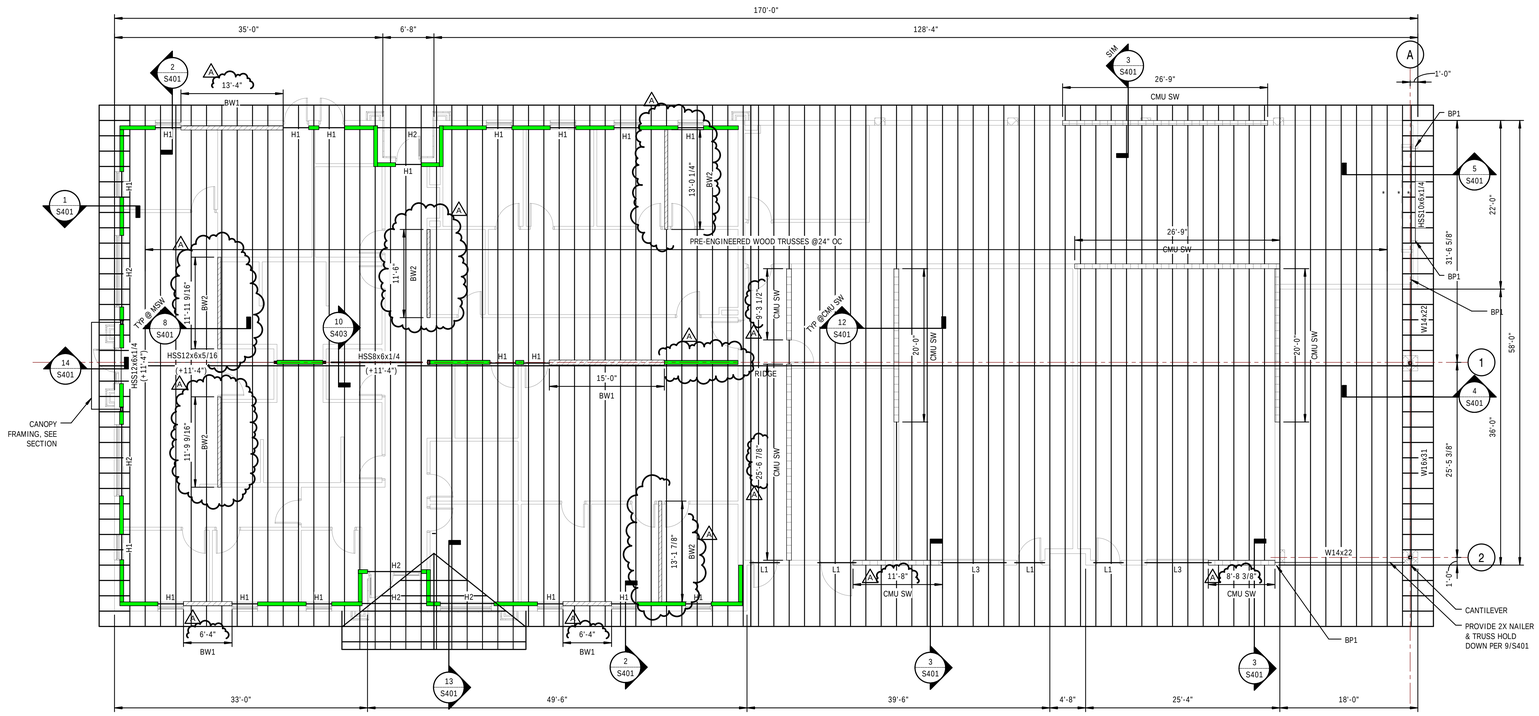

1 / S200 ROOF PLAN

1/8" = 1'-0"

NOTES:

1. FOR GENERAL NOTES AND ABBREVIATIONS, SEE S001.
2. +11'-7" TOP OF STEEL/TRUSS BEARING ELEVATION. [+No] INDICATES TOP OF STEEL ABOVE TRUSS BEARING ELEVATION.
3. FOR TYPICAL ROOF FRAMING DETAILS, SEE S401.
4. "BP#" INDICATES BEARING PLATE, SEE 12/S303.
5. "*" INDICATES TO MODIFY TRUSS BOTTOM CHORD FOR ROLL UP DOOR, SEE 9/A400. BEAR TRUSS ON CMU WALL IF NEEDED.
6. "CMU SW" INDICATES MASONRY SHEAR WALL, SEE S302 AND S303 FOR MASONRY DETAILS.
7. "BW#" INDICATES METAL STUD BRACE WALL, SEE S402 AND S403 FOR METAL STUD DETAILS.
8. "L#" INDICATES LINTEL, SEE 7/S303.

0' 4' 8' 16' 32'

WALL LEGEND

- LOAD BEARING METAL STUD WALL
- METAL STUD STRAP WALL
- MASONRY SHEAR WALL

adwarchitects
environments for life
architecture planning interiors

101 WEST WORTHINGTON AVENUE
CHARLOTTE, NORTH CAROLINA 28203
P704.379.1919
F704.379.1920
www.adwarchitects.com

STEWART
200 S COLLEGE ST
SUITE 270
CHARLOTTE, NC 28202
T 704.334.7925
FIRM LICENSE #C-1051
PROJECT #R14053

NCDOT Division 7: Roadside Environmental & Bituminous Unit Support Facility

Alamance County
Graham, NC

Construction Documents
Submittal SCO
#13-10060-01A

ROOF PLAN

DATE: March 10, 2015
PROJECT NO: 13070

REVISIONS:

NO:	DATE:	DESCRIPTION:
A	05.08.15	SCO Review Comments

THIS DRAWING IS THE PROPERTY OF ADW ARCHITECTS, PA. AND SHALL NOT BE REPRODUCED OR COPIED IN WHOLE OR PART. IT SHALL NOT BE USED ON ANY OTHER PROJECT OR GIVEN TO ANY OTHER COMPANIY OR AGENCY WITHOUT THE CONSENT IF ADW ARCHITECTS, PA.

SEAL

SHEET NUMBER

S200

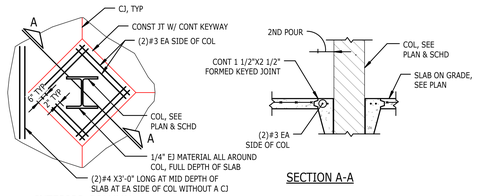

INTERIOR COLUMN

SECTION A-A

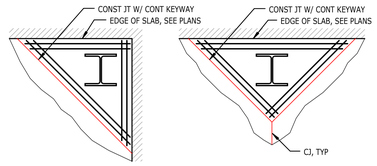

CORNER COLUMN

EDGE COLUMN

9 S300 COLUMN ISOLATION JOINTS, WF COLUMNS

1/2" = 1'-0"

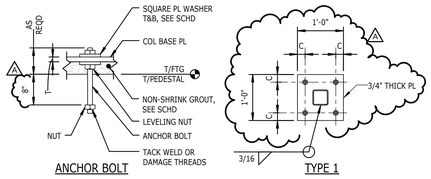

ANCHOR BOLT

TYPE 1

BOLT SIZE	3/4"Ø
DIMENSION "C"	1 1/2"
SQUARE PL WASHER SIZE	1/4"x2"
GROUT THICKNESS	2"

6 S300 STEEL COLUMN BASE PLATES

3/4" = 1'-0"

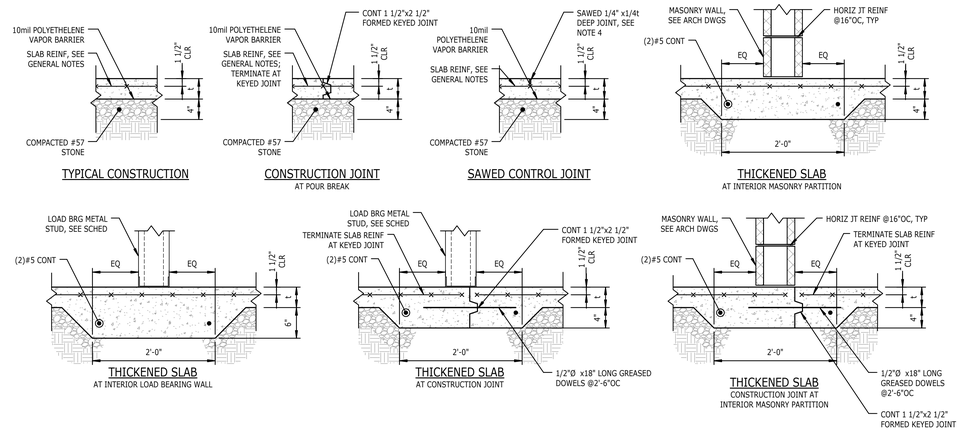

TYPICAL CONSTRUCTION

CONSTRUCTION JOINT
AT POUR BREAK

SAWED CONTROL JOINT

THICKENED SLAB
AT INTERIOR MASONRY PARTITION

THICKENED SLAB
AT INTERIOR LOAD BEARING WALL

THICKENED SLAB
AT CONSTRUCTION JOINT

THICKENED SLAB
CONSTRUCTION JOINT AT INTERIOR MASONRY PARTITION

1 S300 TYPICAL SLAB ON GRADE

1" = 1'-0"

NOTES:
1. 't' DENOTES SLAB THICKNESS, SEE PLANS.
2. LOCATION OF SLAB ON GRADE CONSTRUCTION JOINTS SHALL BE DETERMINED BY THE CONTRACTOR. JOINT LOCATIONS SHALL BE SUBMITTED TO THE ENGINEER FOR APPROVAL PRIOR TO CONSTRUCTION.
3. SEE PLANS FOR LOCATION OF CONTROL JOINTS. WHERE NOT SHOWN ON PLAN, CONTACT THE ENGINEER.
4. SAW CUT CONTROL JOINTS WITHIN 8 HOURS OF SLAB POUR.
5. ALL SILL PLATES IN CONTACT WITH CONCRETE, MASONRY, OR STEEL SHALL BE PRESSURE-TREATED. ANCHOR INTERIOR WALL SILL PLATES TO SLAB WITH 2 1/2" HILTI X-ZF PINS (OR EQUAL) @24"OC, MAXIMUM UNO.

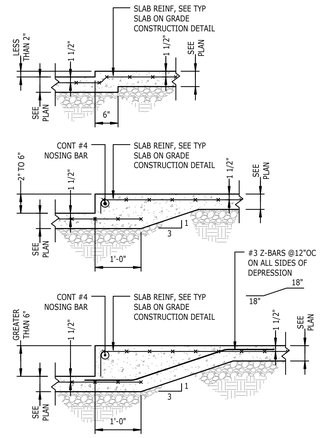

10 S300 TYPICAL DEPRESSION IN SLAB ON GRADE

3/4" = 1'-0"

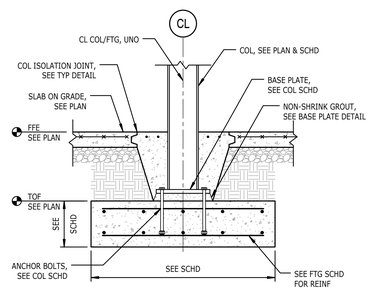

7 S300 TYPICAL SPREAD FOOTING AT STEEL COLUMN

3/4" = 1'-0"

NOTES:
1. COAT BASE PLATE, ANCHOR BOLTS, AND COLUMN BELOW SLAB ON GRADE WITH AN APPROVED ASPHALT PAINT.

CONCRETE REINFORCING DOWEL EMBED (NORMAL WT CONCRETE)				
BAR SIZE	LEG DIM "L"	EMBEDMENT "D"		
		f'c = 3,000 PSI	f'c = 4,000 PSI	f'c = 5,000 PSI
#3	6"	9"	7"	6"
#4	8"	11"	10"	9"
#5	10"	1'-2"	1'-0"	11"
#6	1'-0"	1'-5"	1'-2"	1'-1"
#7	1'-2"	1'-7"	1'-5"	1'-3"
#8	1'-4"	1'-10"	1'-7"	1'-5"
#9	1'-7"	2'-1"	1'-9"	1'-7"
#10	1'-10"	2'-4"	2'-0"	1'-10"
#11	2'-0"	2'-7"	2'-3"	2'-0"

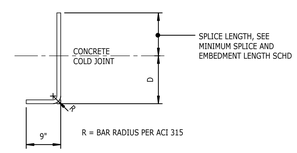

4 S300 SCHEDULE

3/4" = 1'-0"

MARK	SIZE			REINFORCEMENT (EACH WAY)	
	WIDTH	LENGTH	DEPTH	TOP	BOTTOM
F3	3'-0"	3'-0"	1'-0"	NA	(4)#5
F4	4'-0"	4'-0"	1'-0"	NA	(5)#5

2 S300 FOOTING SCHEDULE

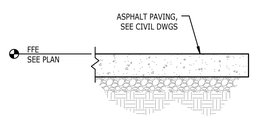

11 S300 SECTION

3/4" = 1'-0"

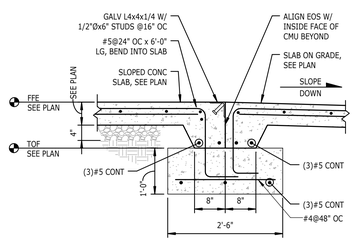

8 S300 SECTION

3/4" = 1'-0"

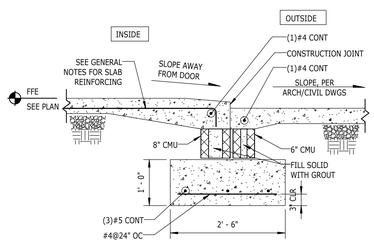

12 S300 TYPICAL DOOR ENTRANCES

3/4" = 1'-0"

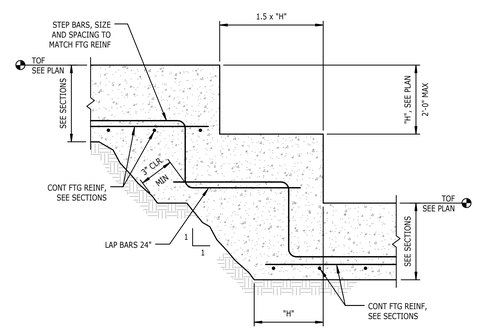

5 S300 TYPICAL STEP IN CONCRETE WALL FOOTING

3/4" = 1'-0"

CONCRETE REINFORCING SPLICES			
BAR SIZE	F'c-3 KSI	F'c-3.5 KSI	F'c-4 KSI
#3	1'-10"	1'-8"	1'-7"
#4	2'-4"	2'-2"	2'-1"
#5	3'-0"	2'-9"	2'-7"
#6	3'-7"	3'-4"	3'-1"
#7	5'-2"	4'-10"	4'-6"
#8	5'-11"	5'-6"	5'-2"
#9	6'-6"	6'-2"	5'-10"
#10	7'-6"	7'-0"	6'-6"
#11	8'-4"	7'-9"	7'-3"

SPLICE LENGTH

3 S300 SPLICE SCHEDULE

3/4" = 1'-0"

adwarchitects
environments for life
architecture planning interiors
101 WEST WORTHINGTON AVENUE
CHARLOTTE, NORTH CAROLINA 28203
P 704.379.1919
F 704.379.1920
www.adwarchitects.com

STEWART
200 S COLLEGE ST
SUITE 270
CHARLOTTE, NC 28202
T 704.334.7925
FIRM LICENSE #C-1051
PROJECT #R14053

NCDOT Division 7: Roadside Environmental & Bituminous Unit Support Facility

Alamance County
Graham, NC

Construction Documents
Submittal SCO
#13-10060-01A

TYPICAL FOUNDATION DETAILS

DATE: March 10, 2015
PROJECT NO: 13070

REVISIONS:

NO:	DATE:	DESCRIPTION:
A	05.08.15	SCO Review Comments

THIS DRAWING IS THE PROPERTY OF ADW ARCHITECTS, PA. AND SHALL NOT BE REPRODUCED OR COPIED IN WHOLE OR PART. IT SHALL NOT BE USED ON ANY OTHER PROJECT OR GIVEN TO ANY OTHER COMPANY OR AGENCY WITHOUT THE CONSENT IF ADW ARCHITECTS, PA.

SEAL

NORTH CAROLINA PROFESSIONAL SEAL 26465 ENGINEER LANCE D. WILLIAMS

05/08/2015

SHEET NUMBER

S300

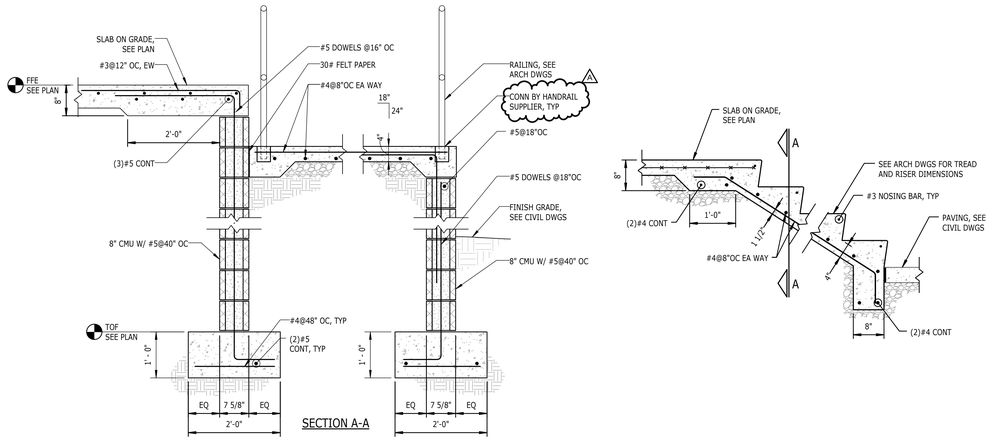

7 S301 STEPS ON GRADE WITH CONCRETE WALLS

3/4" = 1'-0"

NOTE:

1. SECTION A-A DOES NOT APPLY AT SIM.

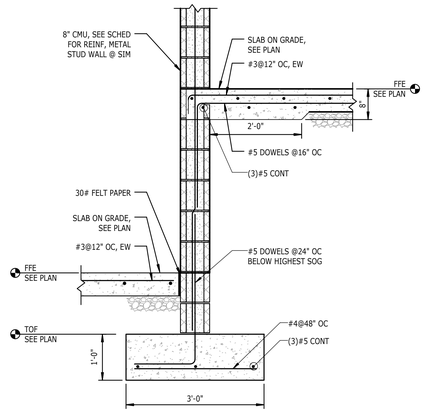

4 S301 SECTION

3/4" = 1'-0"

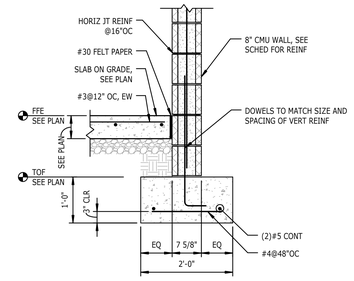

1 S301 INTERIOR MASONRY BEARING WALL

3/4" = 1'-0"

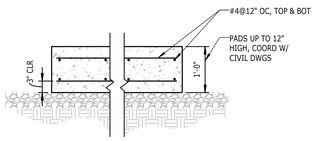

11 S301 CONCRETE EQUIPMENT PAD

3/4" = 1'-0"

NOTES:

1. THE EXACT SIZE, SHAPE, AND LOCATION OF EQUIPMENT (HOUSEKEEPING) PAD(S) SHALL BE DETERMINED BY THE CONTRACTOR AFTER APPROVAL OF EQUIPMENT SHOP DRAWINGS. ANCHOR BOLTS WHERE REQUIRED SHALL BE SIZED AND LOCATED ACCORDING TO MANUFACTURER'S REQUIREMENTS.

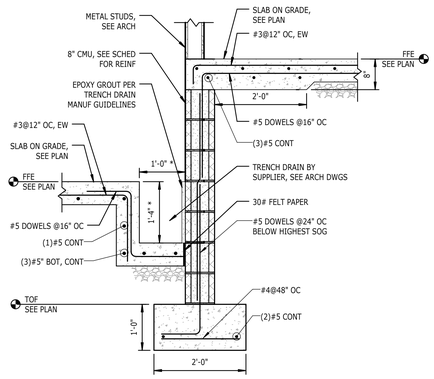

8 S301 SECTION AT CONTAINMENT TRENCH

3/4" = 1'-0"

NOTES:

1. "*" COORDINATE DIMENSIONS WITH TRENCH SUPPLIER.

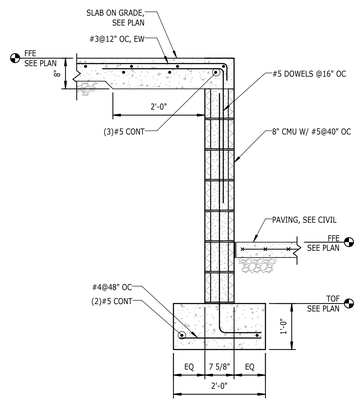

5 S301 CMU WALL AT LOADING DOCK

3/4" = 1'-0"

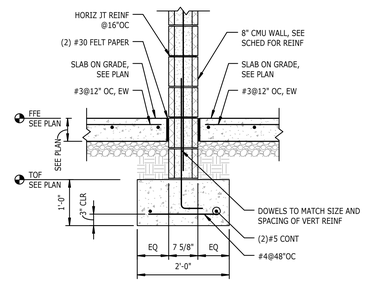

2 S301 INTERIOR MASONRY BEARING WALL

3/4" = 1'-0"

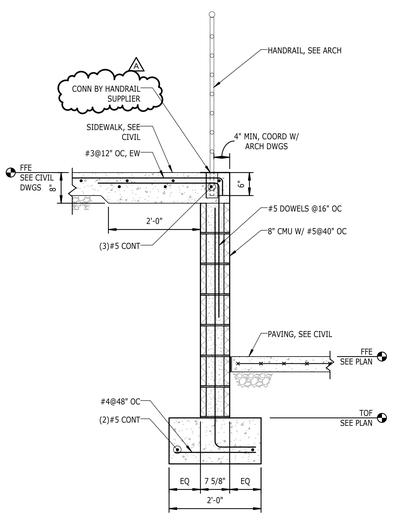

12 S301 CMU WALL AT LOADING DOCK ACCESS

3/4" = 1'-0"

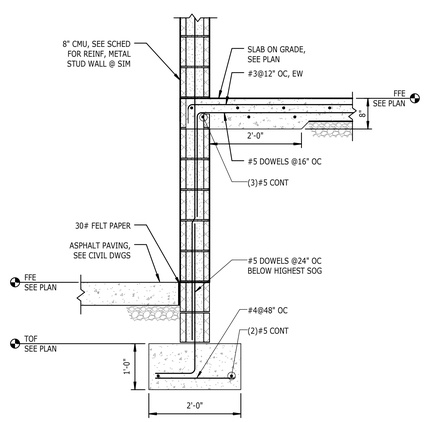

9 S301 SECTION

3/4" = 1'-0"

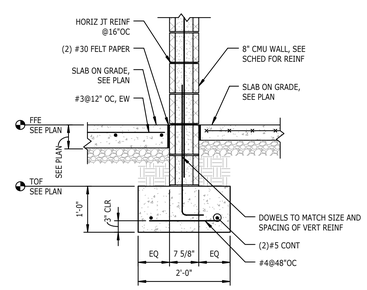

6 S301 SECTION

3/4" = 1'-0"

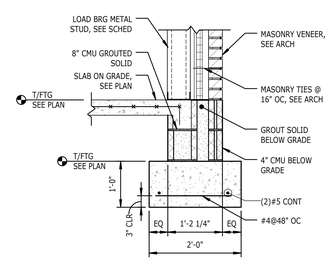

3 S301 SECTION

3/4" = 1'-0"

adwarchitects
environments for life
architecture planning interiors
101 WEST WORTHINGTON AVENUE
CHARLOTTE, NORTH CAROLINA 28203
P704.379.1919
F704.379.1920
www.adwarchitects.com

STEWART
200 S COLLEGE ST
SUITE 270
CHARLOTTE, NC 28202
T 704.334.7925
FIRM LICENSE #C-1051
PROJECT #R14053

NCDOT Division 7: Roadside Environmental & Bituminous Unit Support Facility

Alamance County
Graham, NC

Construction Documents
Submittal SCO
#13-10060-01A

FOUNDATION DETAILS

DATE: March 10, 2015
PROJECT NO: 13070

REVISIONS:

NO:	DATE:	DESCRIPTION:
A	05.08.15	SCO Review Comments

THIS DRAWING IS THE PROPERTY OF ADW ARCHITECTS, PA. AND SHALL NOT BE REPRODUCED OR COPIED IN WHOLE OR PART. IT SHALL NOT BE USED ON ANY OTHER PROJECT OR GIVEN TO ANY OTHER COMPANY OR AGENCY WITHOUT THE CONSENT IF ADW ARCHITECTS, PA.

SEAL

NORTH CAROLINA PROFESSIONAL SEAL 26465 ENGINEER LANCE D. WALLACE

05/08/2015

SHEET NUMBER

S301

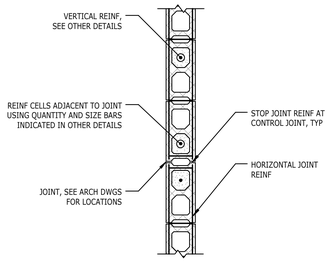

10 / S302 TYPICAL CMU CONTROL JOINT

3/4" = 1'-0"

NOTES:
1. PROVIDE DOWELS TO FOUNDATION MATCHING SIZE OF VERTICAL REINFORCING, TYPICAL. SEE GENERAL NOTES OR MINIMUM SPLICE AND EMBEDMENT LENGTH SCHEDULE FOR LAP REQUIREMENTS.
2. ALL CONTROL JOINT LOCATIONS SHALL BE COORDINATED WITH THE ARCHITECTURAL DRAWINGS AND HAVE A RECOMMENDED MAXIMUM SPACING OF 25 FEET.

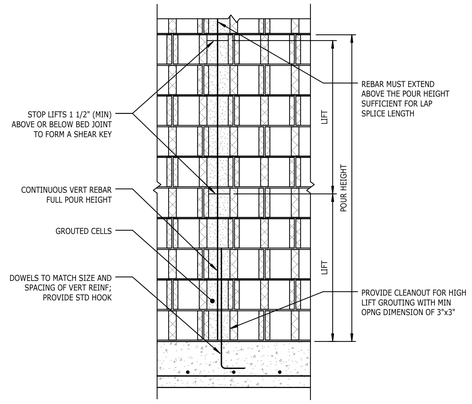

7 / S302 MASONRY GROUT REQUIREMENTS

3/4" = 1'-0"

GENERAL GROUTING REQUIREMENTS:
1. ALL REINFORCED CELLS SHALL BE GROUTED SOLID.
2. REINFORCING BARS SHALL BE IN PROPER POSITION PRIOR TO PLACEMENT OF GROUT, NOT PUSHED DOWN INTO PREVIOUSLY PLACED GROUT. SAME REQUIREMENT APPLIES FOR EMBEDDED BOLTS AND FASTENERS.
3. MORTAR BEDDING UNDER THE FIRST COURSE OF BLOCK CELLS TO BE GROUTED SHALL PERMIT GROUT TO COME INTO DIRECT CONTACT WITH FOUNDATION.
4. PLACE MORTAR ON CROSS WEBS ADJACENT TO ALL GROUTED CELLS.
5. MORTAR THAT PROJECTS MORE THAN 1/2" INTO CELLS THAT ARE TO BE GROUTED SHALL BE REMOVED.
6. GROUTED CELLS SHALL BE MECHANICALLY VIBRATED DURING PLACEMENT OF GROUT. TEN MINUTES AFTER PLACING GROUT, EACH GROUTED CELL SHALL BE RECONSOLIDATED WITH A VIBRATOR.
7. METAL LATH SHALL BE PLACED UNDER ALL BOND BEAMS IN ORDER TO CONTAIN GROUT. FELT OR OTHER BOND BREAKING MATERIAL IS NOT PERMITTED. AS AN ALTERNATIVE TO THIS, "U"-SHAPED LINTEL BLOCKS MAY BE USED FOR BOND BEAMS.
8. EITHER LOW LIFT GROUTING OR HIGH LIFT GROUTING PROCEDURES MAY BE UTILIZED, AT THE CONTRACTOR'S OPTION.

LOW LIFT GROUTING PROCEDURE:
1. LAY WALL TO MAXIMUM OF 5'-0".
2. CLEAN MORTAR AND OTHER DEBRIS FROM CELLS TO BE GROUTED.
3. PLACE REINFORCING BARS IN PROPER POSITION.
4. PLACE GROUT UP TO LIFT HEIGHT AND VIBRATE.

HIGH LIFT GROUTING PROCEDURE:
1. CLEANOUT OPENINGS SHALL BE PROVIDED IN THE FACE SHELLS OF THE BOTTOM COURSE OF ALL CELLS TO BE GROUTED. OPENINGS SHALL BE LARGE ENOUGH TO ALLOW REMOVAL OF DEBRIS.
2. LAY WALL TO MAXIMUM POUR HEIGHT AND CLEAN DEBRIS FROM OPENINGS. PLACE REINFORCING BARS IN PROPER POSITION.
3. CLEAN MORTAR AND OTHER DEBRIS FROM CELLS TO BE GROUTED.
4. MASONRY SHALL CURE A MINIMUM OF 4 HOURS PRIOR TO GROUTING.
5. PLACE GROUT TO THE FOLLOWING HEIGHTS: MAXIMUM LIFT HEIGHT IS 5'-0"; MAXIMUM POUR HEIGHT IS 12'-0" UNLESS EXPRESSLY COORDINATED WITH THE STRUCTURAL ENGINEER.
6. AFTER THE LIFT IS POURED, VIBRATE TO ELIMINATE ALL AIR VOIDS. WAIT BETWEEN 3 AND 10 MINUTES, THEN RECONSOLIDATE BY VIBRATING AGAIN. CONTINUE THIS PROCEDURE FOR FULL POUR HEIGHT. RECONSOLIDATE THE PRIOR LIFT BY EXTENDING THE VIBRATOR THROUGH THE CURRENT LIFT INTO THE PREVIOUS LIFT.
7. GROUT SLUMP MUST BE MAINTAINED BETWEEN 10 AND 11 INCHES FOR HIGH LIFT GROUTING.

MASONRY WALL SCHEDULE

	WALL HEIGHT	VERTICAL REINFORCING		
		8" CMU		HORIZONTAL REINFORCING
		VERTICAL REINFORCING	END WALL REINFORCING	
EXTERIOR, BEARING, AND NON-CANTILEVERED WALLS	UP TO 14'-0"	#5@48" OC	(1)#5	9 GA LADDER TYPE @ 16" OC
SHEAR WALLS	UP TO 14'-0"	#5@48" OC	(2)#5	9 GA LADDER TYPE @ 16" OC
INTERIOR PARTITION WALLS SPANNING VERTICALLY	UP TO 14'-0"	#4@48" OC	(1)#4	9 GA LADDER TYPE @ 16" OC
	OVER 14'-0"	SEE SECTIONS	SEE SECTIONS	9 GA LADDER TYPE @ 16" OC
INTERIOR PARTITION WALLS SPANNING HORIZONTALLY	ALL HEIGHTS	NO REINFORCING	NO REINFORCING	9 GA LADDER TYPE @ 16" OC

NOTES:
1. PROVIDE DOWELS EXTENDING INTO FOUNDATIONS FOR ALL VERTICAL REINFORCING BARS. SIZE AND LOCATION OF DOWELS TO MATCH VERTICAL REINFORCING.
2. ALL NON-LOAD BEARING. NON-SHEAR WALLS, INTERIOR PARTITION WALLS SHALL SPAN EITHER VERTICALLY OR HORIZONTALLY. SEE GUIDELINES BELOW FOR HORIZONTAL AND VERTICAL SPANNING WALLS IN DETAILS.
3. REFER TO PLAN FOR SHEAR WALL LOCATIONS. ENDS OF SHEAR WALLS OCCUR AT WALL INTERRUPTIONS DUE TO COLUMNS, WINDOWS, DOORS, END OF WALLS, CONTROL JOINTS, EXPANSION JOINTS, ETC. REFER TO DETAILS FOR END OF WALL REINFORCING.
4. PROVIDE (2)#5 BARS IN BOND BEAM AT EACH FLOOR LEVEL AT TOPS OF WALLS AND AS INDICATED IN SECTIONS AND SCHEDULES.
5. ALL MASONRY TO BE CONSTRUCTED IN RUNNING BOND BEAM PATTERN WITH INTERLOCKING CORNERS.

HORIZONTAL SPANNING WALLS:
1. WALLS CAN NOT SPAN HORIZONTALLY GREATER THAN THE DIMENSIONS BELOW:
   6" CMU = 18'-4"
   8" CMU = 24'-0"
   12" CMU = 36'-0"
2. WALLS TO BE INTERLOCKED WITH "T" TYPE HORIZONTAL LADDER TYPE REINFORCING.
3. PROVIDE MASONRY WIRE TIES @24"OC ON COLUMNS ADJACENT TO HORIZONTALLY SPANNING MASONRY.

VERTICAL SPANNING WALLS:
1. ALL VERTICAL SPANNING WALLS ARE TO BE ANCHORED TO STEEL STRUCTURE PER OTHER DETAILS.
2. ALL WALLS NOT EXTENDING TO STRUCTURE SHALL BE LATERALLY BRACED IN ACCORDANCE WITH OTHER DETAILS.

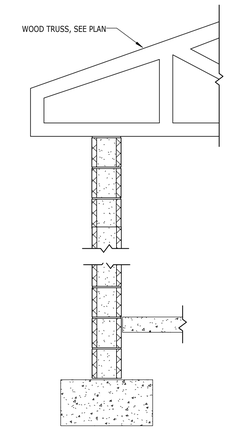

1 / S302 SCHEDULE

3/4" = 1'-0"

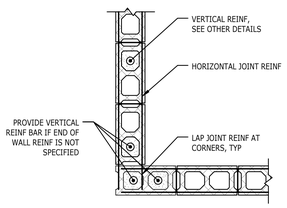

11 / S302 TYPICAL CMU CORNER

3/4" = 1'-0"

NOTES:
1. PROVIDE DOWELS TO FOUNDATION MATCHING SIZE OF VERTICAL REINFORCING, TYPICAL. SEE GENERAL NOTES OR MINIMUM SPLICE AND EMBEDMENT LENGTH SCHEDULE FOR LAP REQUIREMENTS.

STEEL LOOSE LINTEL ANGLE SUPPORTING BRICK VENEER

CLEAR OPENING	LOOSE LINTEL ANGLE
UP TO 5'-0"	L4x4x3/8
5'-1" TO 8'-0"	L6x4x3/8 (LLV)
8'-1" TO 10'-0"	L7x4x3/8 (LLV)
10'-1" TO 12'-0"	L8x4x1/2 (LLV)

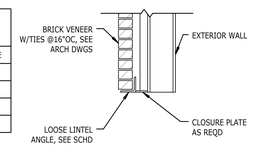

2 / S302 STEEL LOOSE LINTEL ANGLES SUPPORTING BRICK VENEER

3/4" = 1'-0"

NOTES:
1. ALL LOOSE LINTELS SHALL BE PAINTED OR GALVANIZED, SEE ARCHITECTURAL DRAWINGS.
2. PROVIDE 6" MINIMUM BEARING FOR OPENINGS UP TO 8'-0" WIDE. PROVIDE 8" MINIMUM BEARING FOR OPENINGS OVER 8'-0" WIDE.
3. SEE ARCHITECTURAL DRAWINGS FOR ANGLE PLACEMENT AND FLASHING.
4. LOOSE LINTEL ANGLES ARE NOT SHOWN ON THE STRUCTURAL DRAWINGS. SEE ARCHITECTURAL DRAWINGS FOR ALL LOCATIONS OF OPENINGS REQUIRING ANGLES.
5. FOR CLEAR OPENING DIMENSIONS GREATER THAN THOSE SHOWN IN THE SCHEDULE, SEE OTHER DETAILS OR CONTACT THE ENGINEER OF RECORD.

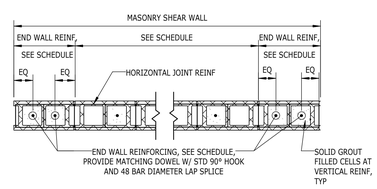

12 / S302 AT MASONRY SHEAR WALL

3/4" = 1'-0"

NOTES:
1. ALTERNATE COURSES (LAY BLOCK IN RUNNING BOND).
2. SEE SHEARWALL SCHEDULE FOR HORIZONTAL REINFORCING.

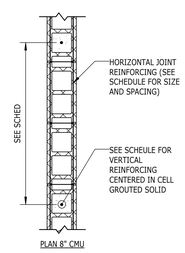

9 / S302 TYPICAL CMU WALL REINFORCING

3/4" = 1'-0"

MINIMUM SPLICE AND EMBEDMENT LENGTH SCHEDULE

BAR SIZE	LAP SPLICE
#3	27"
#4	36"
#5	45"
#6	54"
#7	63"
#8	72"

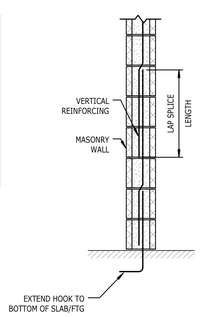

6 / S302 MINIMUM SPLICE AND EMBEDMENT LENGTH SCHEDULE

3/4" = 1'-0"

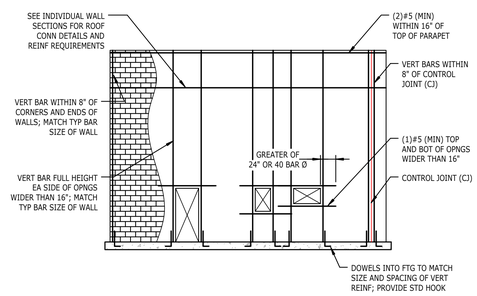

3 / S302 MINIMUM CMU WALL REINFORCING REQUIREMENTS, SEISMIC DESIGN CATEGORIES A, B, AND C

3/4" = 1'-0"

NOTES:
1. REINFORCING SHOWN IS A MINIMUM REQUIREMENT. INDIVIDUAL WALL SECTION REINFORCING REQUIREMENTS (SUCH AS NUMBER OR SIZE OF BARS) SHALL TAKE PRECEDENCE OVER THE REQUIREMENTS SHOWN HEREIN. SEE INDIVIDUAL WALL SECTIONS AND SCHEDULES FOR VERTICAL REINFORCING REQUIREMENTS.
2. ALL DISCONTINUOUS REINFORCEMENT SHALL BE LAPPED PER MINIMUM SPLICE AND EMBEDMENT LENGTH SCHEDULE.
3. VERTICAL STEEL MUST BE SECURED IN PLACE BEFORE THE BLOCKS ARE LAID. ALL VERTICAL REINFORCEMENT SHALL BE CONTINUOUS THROUGH MASONRY LINTELS AND BOND BEAMS, UNO.
4. AT OPENINGS WHERE STEEL BEAM LINTELS ARE PROVIDED, REINFORCE THE JAMB CELL TO THE BEARING ELEVATION OF THE LINTEL, AND REINFORCE THE NEXT ADJACENT CELL PAST THE END OF THE BEAM FULL HEIGHT AS SHOWN IN THIS DETAIL.
5. DETAIL DOES NOT APPLY TO INTERIOR NON-LOAD BEARING PARTITION WALLS.
6. PROVIDE MINIMUM (2) LEGS OF W1.7 HORIZONTAL JOINT REINFORCING @16"OC VERTICALLY.

adwarchitects
environments for life
architecture planning interiors
101 WEST WORTHINGTON AVENUE
CHARLOTTE, NORTH CAROLINA 28203
P704.379.1919
F704.379.1920
www.adwarchitects.com

STEWART
200 S COLLEGE ST
SUITE 270
CHARLOTTE, NC 28202
T 704.334.7925
FIRM LICENSE #C-1051
PROJECT #R14053

NCDOT Division 7: Roadside Environmental & Bituminous Unit Support Facility

Alamance County
Graham, NC

Construction Documents
Submittal SCO
#13-10060-01A

TYPICAL MASONRY DETAILS

DATE: March 10, 2015
PROJECT NO: 13070

REVISIONS:
NO: DATE: DESCRIPTION:

THIS DRAWING IS THE PROPERTY OF ADW ARCHITECTS, PA. AND SHALL NOT BE REPRODUCED OR COPIED IN WHOLE OR PART. IT SHALL NOT BE USED ON ANY OTHER PROJECT OR GIVEN TO ANY OTHER COMPANY OR AGENCY WITHOUT THE CONSENT IF ADW ARCHITECTS, PA.

SEAL
NORTH CAROLINA PROFESSIONAL SEAL 26465 ENGINEER LANCE D. WALLACE
03/10/2015

SHEET NUMBER
S302

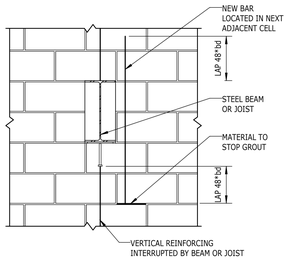

10 / S303 REINFORCING INTERRUPTED BY BEAM OR JOIST

3/4" = 1'-0"

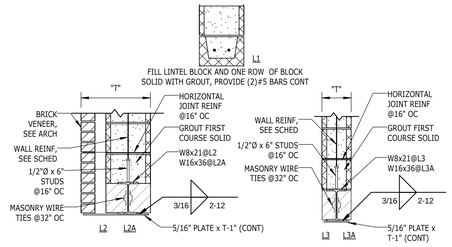

NOTES:
1. FOR LINTELS IN CMU WALLS, MATCH CORRESPONDING WALL WIDTH.
2. 1" MINIMUM CLEAR SPACE SHALL BE PROVIDED AROUND ALL REINFORCING.
3. WALL ABOVE LINTEL SHALL BE REINFORCED VERTICALLY SIMILAR TO WALL ON EITHER SIDE OF LINTEL.
4. HORIZONTAL REINFORCING SHALL EXTEND BEYOND EDGE OF OPENING PER LINTEL/JAMB REINFORCING DETAILS THIS SHEET.
5. LINTELS OVER OPENINGS NOT SHOWN ON PLAN SHALL BE AS FOLLOWS (INTERIOR OR EXTERIOR WALLS).
6. FOR OPENINGS UP TO 5'-0" PROVIDE TYPE L1 LINTEL.
   FOR OPENINGS UP TO 5'-0" IN CMU + BRICK WALL, PROVIDE TYPE L1 LINTEL AND SEE LOOSE LINTEL SCHEDULE FOR SIZE OF ANGLE.
7. FOR OPENINGS 5'-1" TO 10'-0" IN CMU + BRICK WALLS, PROVIDE TYPE L2 LINTEL WITH 8" BEARING.
   FOR OPENINGS 5'-1" TO 10'-0" IN CMU WALLS, PROVIDE TYPE L3 LINTEL WITH 8" BEARING.
8. FOR OPENINGS 10'-1" TO 16'-0" IN CMU + BRICK WALLS, PROVIDE TYPE L2A LINTEL WITH 8" BEARING.
   FOR OPENINGS 10'-1" TO 16'-0" IN CMU WALLS, PROVIDE TYPE L3A LINTEL WITH 8" BEARING.
9. ALL EXTERIOR LINTELS SHALL BE HOT-DIP GALVANIZED.
10. STEEL FABRICATOR TO INSTALL WIRE TIES TO BEAM DURING LINTEL FABRICATION. COORDINATE LOCATION ANd SPACING WITH MASONRY CONTRACTOR.

7 / S303 CMU WALL OPENING LINTEL SCHEDULE1

3/4" = 1'-0"

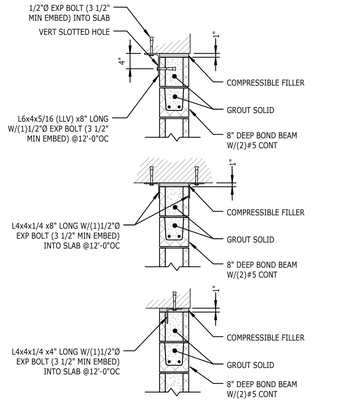

ALTERNATE DETAIL FOR USE
WHERE CMU WALL CONNECTION
IS EXPOSED TO VIEW

4 / S303 TYPICAL INTERIOR PARTITION BRACING

3/4" = 1'-0"

NOTES:
1. THIS DETAIL APPLIES WHERE THE DISTANCE BETWEEN INTERSECTING WALLS EXCEEDS 24'-0" FOR 8" CMU OR LARGER, 18'-0" FOR 6" CMU, OR 12'-0" FOR 4" CMU.

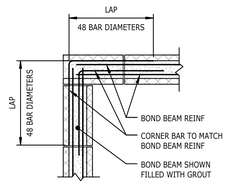

1 / S303 TYPICAL BOND BEAM CORNER

3/4" = 1'-0"

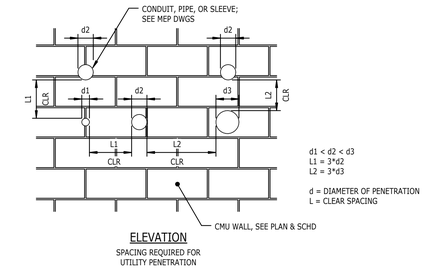

ELEVATION

SPACING REQUIRED FOR
UTILITY PENETRATION

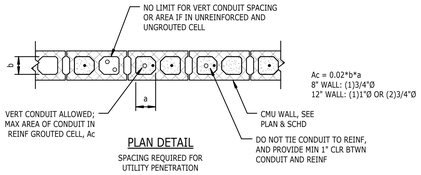

PLAN DETAIL

SPACING REQUIRED FOR
UTILITY PENETRATION

11 / S303 CONDUIT PENETRATIONS IN CMU WALL

3/4" = 1'-0"

NOTES:
1. REFER TO MEP DRAWINGS FOR ALL TELECOM, CONDUIT, AND PIPES 8"Ø AND SMALLER. CONTRACTOR TO FOLLOW DETAIL SPACING REQUIREMENTS FOR LAYOUT. IF SPACING CANNOT BE MAINTAINED, PENETRATIONS MUST BE GROUPED BELOW CMU LINTEL. SEE ADDITIONAL TYPICAL DETAILS.
2. CONDUITS SHALL NOT PENETRATE BOND BEAMS NOR LINTELS.
3. PIPES WITH LIQUID, GAS, OR VAPORS HIGHER THAN 150°F ARE NOT PERMITTED IN WALLS.
4. PIPES WITH PRESSURE IN EXCESS OF 55 PSI ARE NOT PERMITTED IN WALLS.
5. PIPES WITH WATER OR LIQUID SUBJECT TO FREEZING ARE NOT PERMITTED IN WALLS.

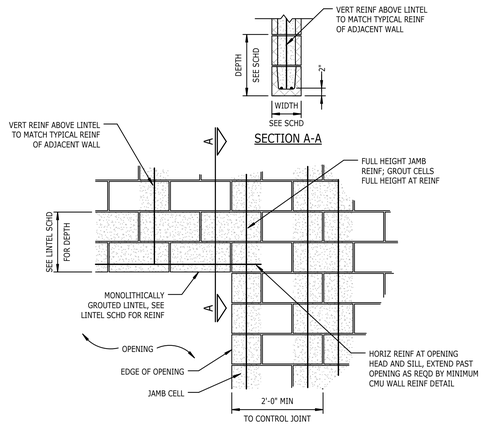

8 / S303 CMU LINTEL AND JAMB CONSTRUCTION

3/4" = 1'-0"

NOTES:
1. TYPICAL WALL REINFORCING AND CONTROL JOINT REINFORCING NOT SHOWN FOR CLARITY.

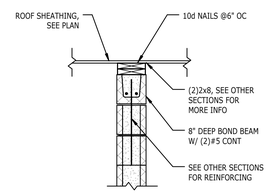

5 / S303 CONNECTION OF ROOF DECK TO SHEAR WALL

3/4" = 1'-0"

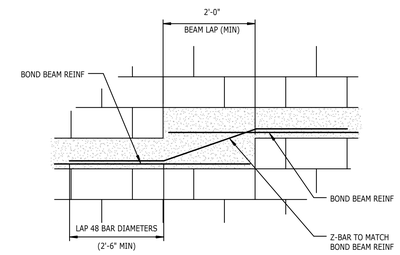

2 / S303 TYPICAL STEP IN CMU BOND BEAM

3/4" = 1'-0"

BEARING PLATE SCHEDULE				
MARK	THICKNESS	WIDTH	LENGTH	# OF x6" LONG HEADED STUDS
BP1	5/8"	7"	7"	(2)1/2"Ø

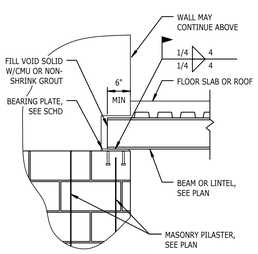

BEAM BEARING
PARALLEL TO WALL

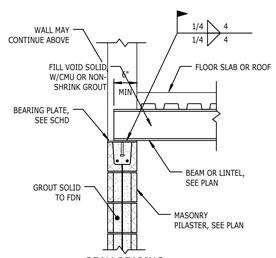

BEAM BEARING
PERPENDICULAR TO WALL

12 / S303 STEEL BEAM BEARING DETAILS

3/4" = 1'-0"

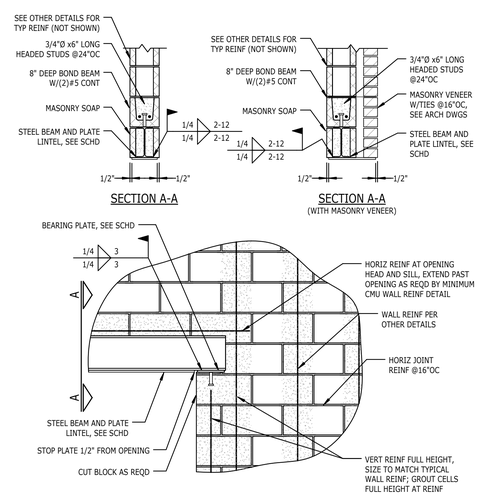

9 / S303 STEEL BEAM LINTEL AND JAMB CONSTRUCTION

3/4" = 1'-0"

NON-LOAD BEARING CMU LINTEL SCHEDULE							
LINTEL SIZE OPENING SIZE	4"x8"	6"x8"	6"x16"	8"x8"	8"x16"	12"x8"	12"x16"
3'-4"	(1)#3	(1)#3	NA	(1)#3	NA	(2)#4	NA
4'-0"	(1)#3	(1)#4	NA	(2)#3	NA	(2)#4	NA
4'-8"	(1)#4	(1)#4	NA	(2)#4	NA	(2)#4	NA
5'-4"	(1)#4	(2)#4	NA	(2)#4	NA	(2)#5	NA
6'-0"	(1)#5	(2)#4	(1)#4	(2)#4	(2)#4	(2)#5	(2)#4

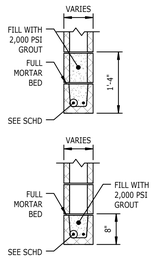

6 / S303 NON-LOAD BEARING CMU LINTEL SCHEDULE

3/4" = 1'-0"

NOTES:
1. THIS SCHEDULE APPLIES TO OPENINGS IN ALL NON-LOAD BEARING WALLS AND PARTITIONS.
2. SEE ARCHITECTURAL DRAWINGS FOR SIZE AND LOCATIONS OF OPENINGS.
3. PROVIDE 8" OF BEARING AT EACH END OF ALL OPENINGS.
4. DO NOT PLACE CONTROL JOINT IN CMU LINTEL OR WITHIN 8" OF JAMB.

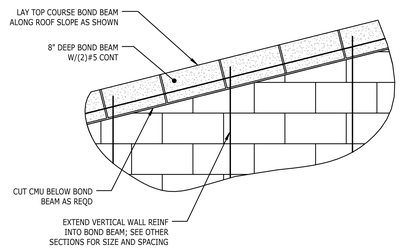

3 / S303 SLOPED BOND BEAM

3/4" = 1'-0"

adwarchitects
environments for life
architecture planning interiors
101 WEST WORTHINGTON AVENUE
CHARLOTTE, NORTH CAROLINA 28203
P704.379.1919
F704.379.1920
www.adwarchitects.com

STEWART
200 S COLLEGE ST
SUITE 270
CHARLOTTE, NC 28202
T 704.334.7925
FIRM LICENSE #C-1051
PROJECT #R14053

NCDOT Division 7: Roadside Environmental & Bituminous Unit Support Facility

Alamance County
Graham, NC

Construction Documents
Submittal SCO
#13-10060-01A

TYPICAL MASONRY
DETAILS

DATE: March 10, 2015
PROJECT NO: 13070

REVISIONS:
NO: DATE: DESCRIPTION:

THIS DRAWING IS THE PROPERTY OF ADW ARCHITECTS, PA. AND SHALL NOT BE REPRODUCED OR COPIED IN WHOLE OR PART. IT SHALL NOT BE USED ON ANY OTHER PROJECT OR GIVEN TO ANY OTHER COMPANY OR AGENCY WITHOUT THE CONSENT IF ADW ARCHITECTS, PA.

SEAL
NORTH CAROLINA PROFESSIONAL SEAL 26465 ENGINEER LANCE D. WILLIAMS
03/10/2015

SHEET NUMBER
S303

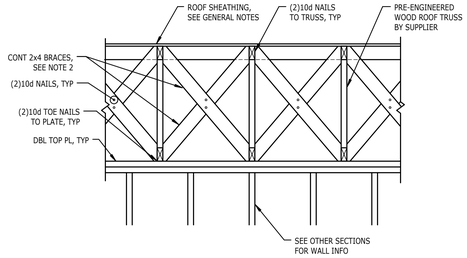

11 S401 **DETAIL**

TYPICAL BRACING BETWEEN ROOF TRUSSES AT SHEAR WALLS
3/4" = 1'-0"
NOTES:
1. SEE 7/S401 FOR ADDITIONAL SHEAR WALL REQUIREMENTS.
2. PROVIDE BRACES AS CLOSE TO 1 TO 1 SLOPE AS POSSIBLE. BRACE MAY NEED TO PASS THROUGH MULTIPLE TRUSSES (3 MAX) TO ACHIEVE SLOPE.

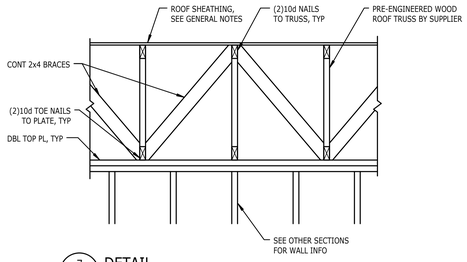

7 S401 **DETAIL**

TYPICAL BRACING BETWEEN ROOF TRUSSES AT BEARING WALLS
3/4" = 1'-0"
NOTES:
1. AT INTERIOR SHEAR WALL LOCATIONS, PROVIDE BRACES AS CLOSE TO 1 TO 1 SLOPE AS POSSIBLE. BRACE MAY NEED TO PASS THROUGH MULTIPLE TRUSSES (3 MAX) TO ACHIEVE SLOPE.

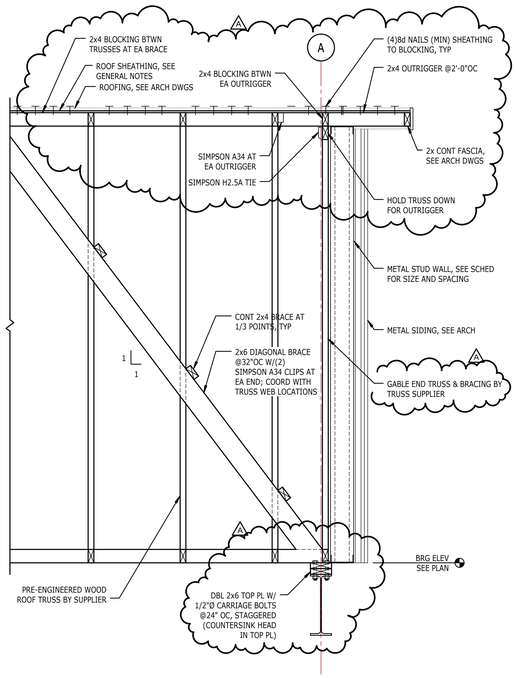

4 S401 **SECTION**

3/4" = 1'-0"

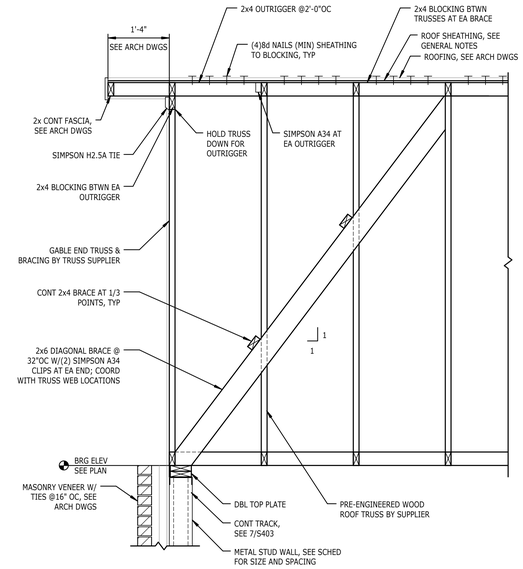

1 S401 **GABLE END TRUSS BRACING**

3/4" = 1'-0"

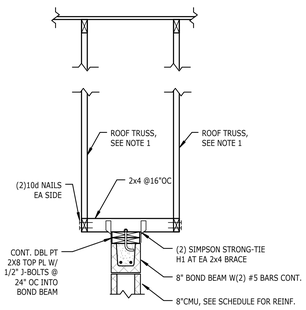

12 S401 **TYPICAL INTERIOR SHEAR WALL AT ROOF**

3/4" = 1'-0"
NOTES:
1. TRUSS SUPPLIER SHALL DESIGN TRUSSES FOR 300 PLF OVER LENGTH OF SHEAR WALL FROM TOP OF SHEAR WALL TO ROOF.
2. TRUSS SUPPLIER SHALL INDICATE TRUSSES DESIGNED FOR LATERAL LOADING ON TRUSS LAYOUT PLAN.

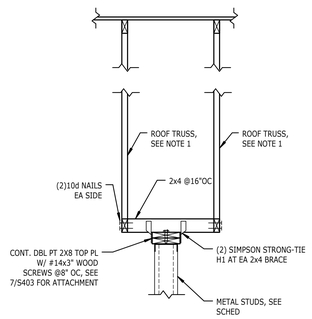

8 S401 **TYPICAL INTERIOR SHEAR WALL AT ROOF**

3/4" = 1'-0"
NOTES:
1. TRUSS SUPPLIER SHALL DESIGN TRUSSES FOR 300 PLF OVER LENGTH OF SHEAR WALL FROM TOP OF SHEAR WALL TO ROOF.
2. TRUSS SUPPLIER SHALL INDICATE TRUSSES DESIGNED FOR LATERAL LOADING ON TRUSS LAYOUT PLAN.

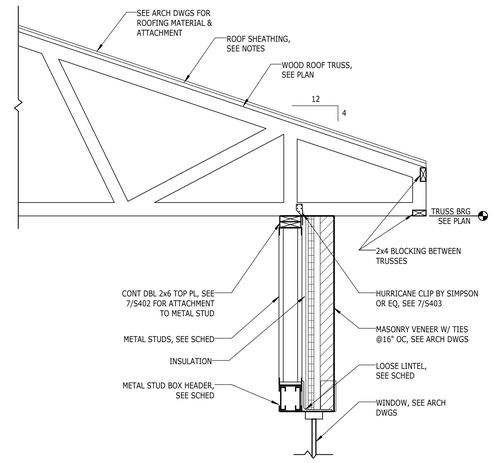

2 S401 **SECTION**

3/4" = 1'-0"

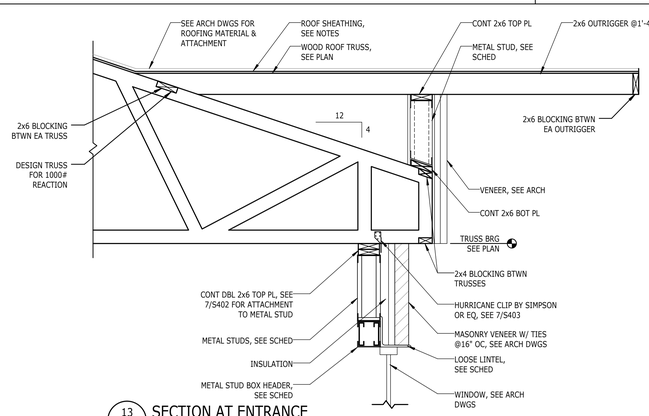

13 S401 **SECTION AT ENTRANCE**

3/4" = 1'-0"

9 S401 **DETAIL NOT USED**

1 1/2" = 1'-0"

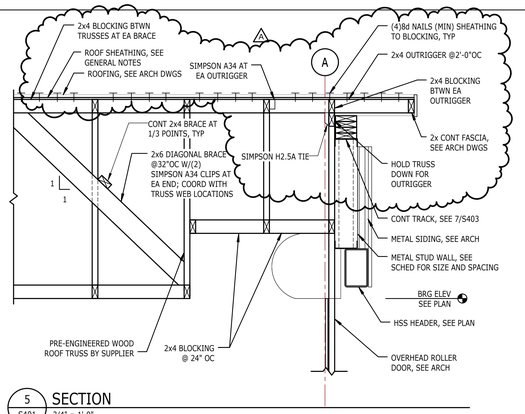

5 S401 **SECTION**

3/4" = 1'-0"

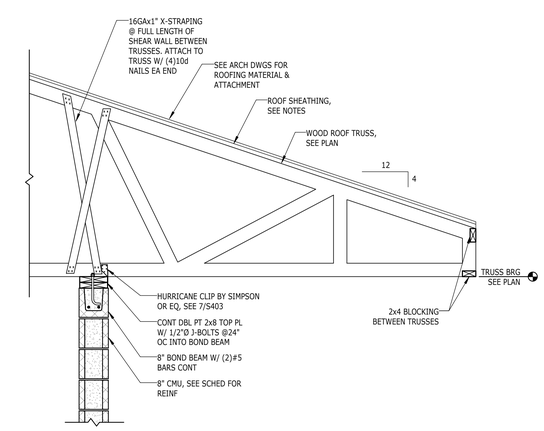

3 S401 **SECTION**

3/4" = 1'-0"

NOTES:
1.PROVIDE X-STRAPPING AS CLOSE TO 1 TO 1SLOPE AS POSSIBLE. BRACEMAY NEED TO PASS THROUGH MULTIPLE TRUSSES(3 MAX) TO ACHIEVE SLOPE.

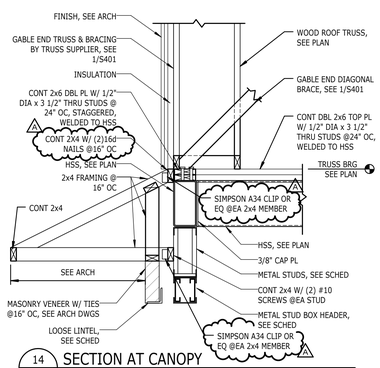

14 S401 **SECTION AT CANOPY**

3/4" = 1'-0"

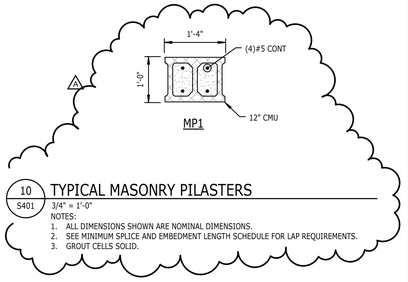

10 S401 **TYPICAL MASONRY PILASTERS**

3/4" = 1'-0"
NOTES:
1. ALL DIMENSIONS SHOWN ARE NOMINAL DIMENSIONS.
2. SEE MINIMUM SPLICE AND EMBEDMENT LENGTH SCHEDULE FOR LAP REQUIREMENTS.
3. GROUT CELLS SOLID.

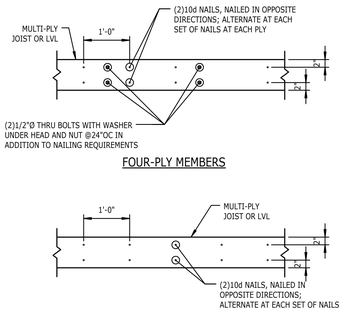

6 S401 **NAILING PATTERN AT MULTI-PLY JOIST**

3/4" = 1'-0"

adwarchitects
environments for life
architecture planning interiors
101 WEST WORTHINGTON AVENUE
CHARLOTTE, NORTH CAROLINA 28203
P704.379.1919
F704.379.1920
www.adwarchitects.com

STEWART
200 S COLLEGE ST
SUITE 270
CHARLOTTE, NC 28202
T 704.334.7925
FIRM LICENSE #C-1051
PROJECT #R14053

NCDOT Division 7: Roadside Environmental & Bituminous Unit Support Facility

Alamance County
Graham, NC

Construction Documents
Submittal SCO
#13-10060-01A

TYPICAL AND ROOF FRAMING DETAILS

DATE: March 10, 2015
PROJECT NO: 13070

REVISIONS:

NO:	DATE:	DESCRIPTION:
A	05.08.15	SCO Review Comments

THIS DRAWING IS THE PROPERTY OF ADW ARCHITECTS, PA. AND SHALL NOT BE REPRODUCED OR COPIED IN WHOLE OR PART. IT SHALL NOT BE USED ON ANY OTHER PROJECT OR GIVEN TO ANY OTHER COMPANY OR AGENCY WITHOUT THE CONSENT IF ADW ARCHITECTS, PA.

SEAL

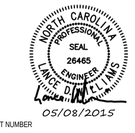

SHEET NUMBER

S401

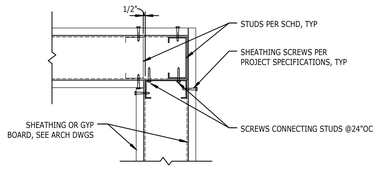

CORNER FRAMING

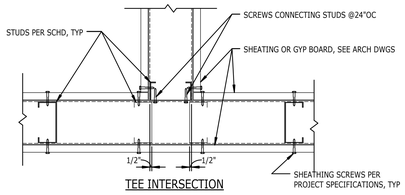

TEE INTERSECTION

10 / S402 DETAIL
3/4" = 1'-0"

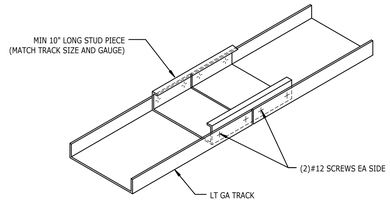

7 / S402 DETAIL
3/4" = 1'-0"
NOTES:
1. SPLICE SHALL OCCUR OVER CENTERLINE OF VERTICAL STUD, TYP.

4 / S402 DETAIL NOT USED
3/4" = 1'-0"

LOAD BEARING WALL CONSTRUCTION SCHEDULE						
STORY	TYPE	SIZE/GAUGE	Fy	SPACING	BRIDGING	NOTES
1ST FLOOR TO ROOF	EXTERIOR	600S162-33	33 KSI	16"OC	4'-0"OC MAX	-
	INTERIOR	600S162-33	33 KSI	16"OC	4'-0"OC MAX	-

NON-LOAD BEARING EXTERIOR WALL CONSTRUCTION SCHEDULE						
STORY	TYPE	SIZE/GAUGE	Fy	SPACING	BRIDGING	NOTES
1ST FLOOR TO ROOF	EXTERIOR	600S137-33	33 KSI	16"OC	4'-0"OC MAX	-
	EXTERIOR, CORNER ZONE	600S137-33	33 KSI	12"OC	4'-0"OC MAX	CORNER ZONE WIDTH IS 6'-0"

1 / S402 WALL CONSTRUCTION SCHEDULE
3/4" = 1'-0"
NOTES:
1. 00S162-33
   - STUD GAUGE (MIL)
   - FLANGE WIDTH (IN)
   - STUD DEPTH (IN)
2. "Fy" INDICATES MINIMUM YIELD STRENGTH.
3. SEE S402 & S403 FOR TYPICAL DETAILS.
4. TOP AND BOTTOM TRACK SHALL BE 54-MIL (16GA) MINIMUM THICKNESS.

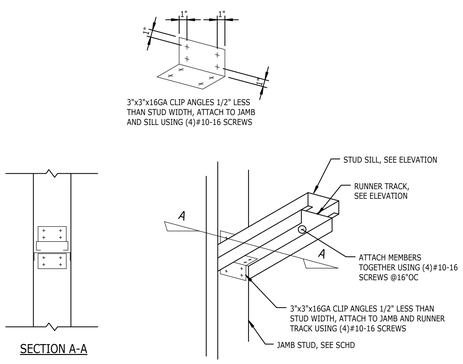

SECTION A-A

11 / S402 DETAIL
3/4" = 1'-0"

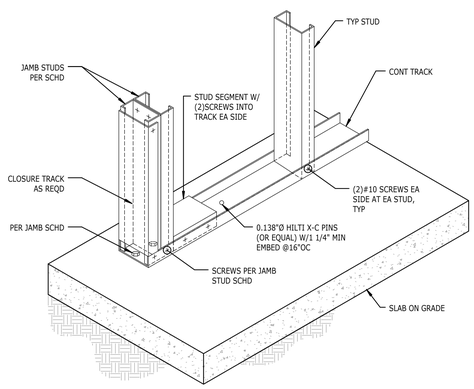

8 / S402 DETAIL
3/4" = 1'-0"

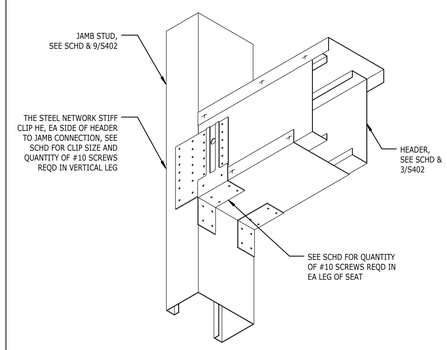

5 / S402 SECTION
3/4" = 1'-0"

HEADER AND JAMB SCHEDULE								
LOCATION	HEADER TYPE	HEADER REQUIREMENTS		SILL REQUIREMENTS	JAMB REQUIREMENTS	STIFF CLIP CONNECTION		
		STUDS	TRACKS			CLIP SIZE	VERTICAL LEG SCREW PATTERN	SEATED LEG SCREW PATTERN
1ST TO ROOF	H1	(2)600S162-43 [50ksi]	(2)600T125-33	NA	(2)600S162-43 [50ksi]	HE(H)-43[50ksi]	24	2
1ST TO ROOF	H2	(2)600S162-54 [50ksi]	(2)600T125-33	NA	(2)600S162-54 [50ksi]	HE(H)-54[50ksi]	24	2

2 / S402 SCHEDULE
3/4" = 1'-0"
NOTES:
1. SEE 3/S402 THRU 9/S402 FOR TYPICAL DETAILS.

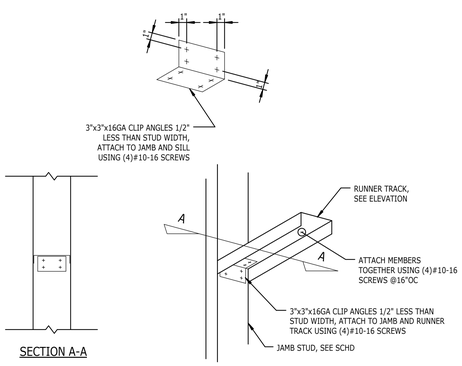

SECTION A-A

12 / S402 DETAIL
3/4" = 1'-0"

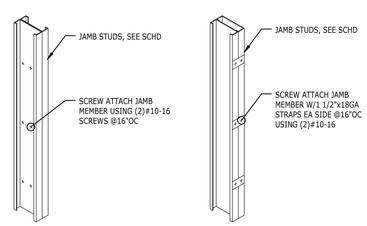

9 / S402 DETAIL
3/4" = 1'-0"
NOTE:
1. IN LIEU OF SCREWS/STRAPS SHOWN, MULTIPLE STUDS CAN BE WELDED TOGETHER PER GENERAL NOTES.

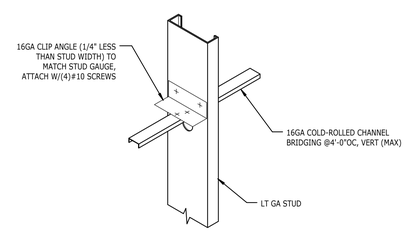

6 / S402 DETAIL
3/4" = 1'-0"
NOTES:
1. ALSO SEE 8/4S-400.

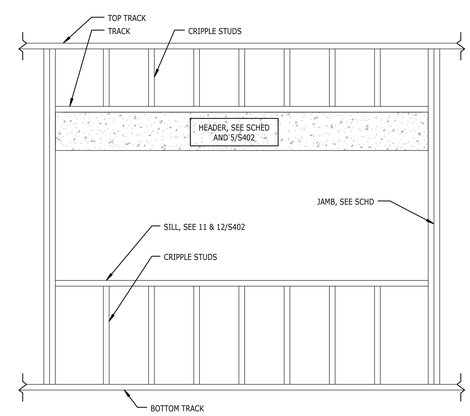

EXTERIOR CONDITION

3 / S402 DETAIL
3/4" = 1'-0"

adwarchitects
environments for life
architecture planning interiors
101 WEST WORTHINGTON AVENUE
CHARLOTTE, NORTH CAROLINA 28203
P704.379.1919
F704.379.1920
www.adwarchitects.com

STEWART
200 S COLLEGE ST
SUITE 270
CHARLOTTE, NC 28202
T 704.334.7925
FIRM LICENSE #C-1051
PROJECT #R14053

NCDOT Division 7: Roadside Environmental & Bituminous Unit Support Facility

Alamance County
Graham, NC

Construction Documents
Submittal SCO
#13-10060-01A

TYPICAL METAL STUD DETAILS

DATE: March 10, 2015
PROJECT NO: 13070

REVISIONS:
NO: DATE: DESCRIPTION:

THIS DRAWING IS THE PROPERTY OF ADW ARCHITECTS, PA. AND SHALL NOT BE REPRODUCED OR COPIED IN WHOLE OR PART. IT SHALL NOT BE USED ON ANY OTHER PROJECT OR GIVEN TO ANY OTHER COMPANIY OR AGENCY WITHOUT THE CONSENT IF ADW ARCHITECTS, PA.

SEAL

SHEET NUMBER

S402

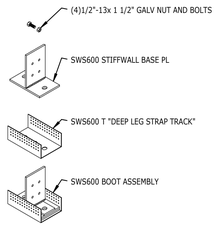

8 S403 LBMS-039
3/4" = 1'-0"
NOTES:
1. STIFFWALL BRACED WALL SYSTEM DESCRIBED AS PROVIDED BY "THE STEEL NETWORK".
2. REFER TO MANUFACTURER'S LITERATURE FOR INSTALLATION GUIDELINES AND REQUIREMENTS.

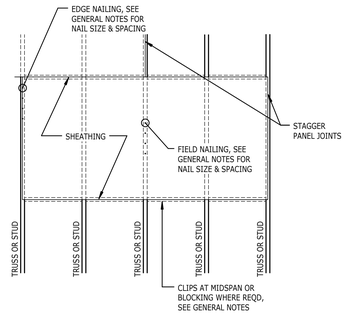

5 S403 NAILING PATTERN FOR SHEATHING
1/2" = 1'-0"

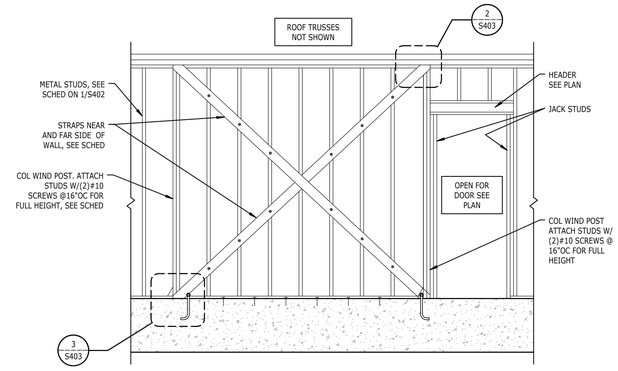

1 S403 TYPICAL METAL STUD STRAP WALL
3/4" = 1'-0"

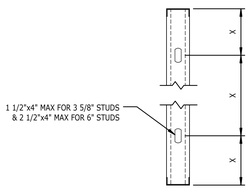

H	X
UP TO 12'-0"	H/3 MAXIMUM
UP TO 16'-0"	H/4 MAXIMUM

9 S403 DETAIL
3/4" = 1'-0"
NOTES:
1. ALSO SEE 7/4S-400.

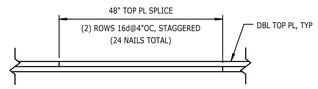

6 S403 TYPICAL TOP PLATE SPLICE
1" = 1'-0"

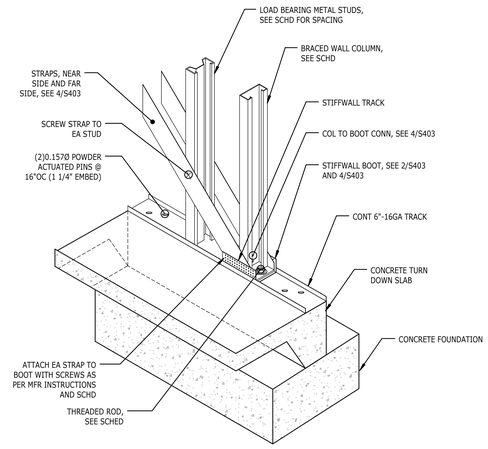

3 S403 DETAIL
3/4" = 1'-0"
NOTES:
1. STIFFWALL BRACED WALL SYSTEM DESCRIBED AS PROVIDED BY "THE STEEL NETWORK".
2. REFER TO MANUFACTURER'S LITERATURE FOR INSTALLATION GUIDELINES AND REQUIREMENTS.

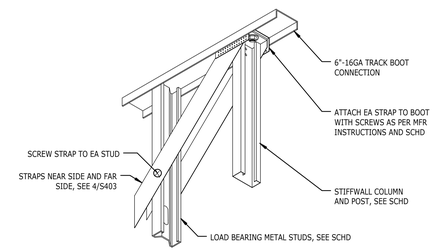

2 S403 DETAIL
3/4" = 1'-0"
NOTES:
1. STIFFWALL BRACED WALL SYSTEM DESCRIBED AS PROVIDED BY "THE STEEL NETWORK".
2. REFER TO MANUFACTURER'S LITERATURE FOR INSTALLATION GUIDELINES AND REQUIREMENTS.

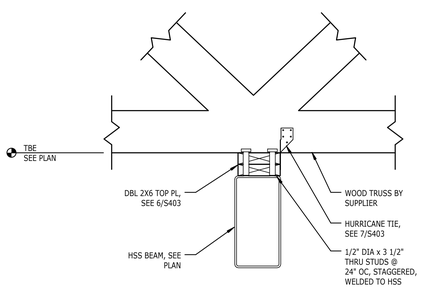

10 S403 DETAIL
TYPICAL BEAM TO TRUSS ATTACHMENT AT INTERIOR BEAM
1 1/2" = 1'-0"

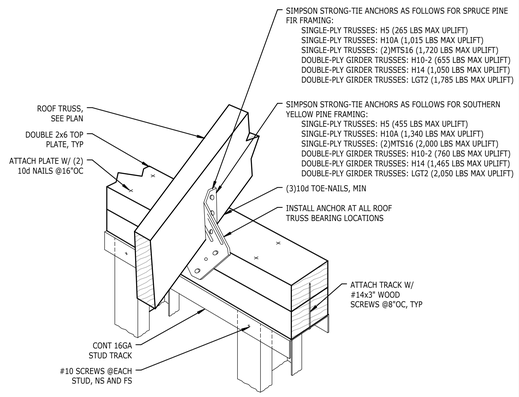

STUD UPLIFT ANCHOR REQUIREMENTS SOUTHERN YELLOW PINE FRAMING, TRUSS SPACING @24"OC	
TRUSS REACTION	ANCHOR TYPE
LESS THAN 330 LBS	NONE
330 LBS TO 1,200 LBS	H2.5A
1,200 LBS TO 2,500 LBS	H2.5A PLUS H6
GREATER THAN 2,500 LBS	CONTACT ENGR

STUD UPLIFT ANCHOR REQUIREMENTS SPRUCE PINE FIR FRAMING, TRUSS SPACING @24"OC	
TRUSS REACTION	ANCHOR TYPE
LESS THAN 330 LBS	NONE
330 LBS TO 1,100 LBS	H2.5A
1,100 LBS TO 2,250 LBS	H2.5A PLUS H6
GREATER THAN 2,250 LBS	CONTACT ENGR

7 S403 TYPICAL ROOF TRUSS CONNECTION
3/4" = 1'-0"
NOTES:
1. TRUSS MANUFACTURER OR CONTRACTOR SHALL SUBMIT FOR ADDITIONAL HOLDOWN ANCHORS AT TRUSS GIRDER, MULTI-PLY TRUSSES, JACK TRUSSES, AND HIP AND VALLEY TRUSSES.

BRACED WALL SCHEDULE

BW#	FLOOR NO.	WALL LENGTH	COLUMN	BRACING (SEE NOTE 4)	BOOT TYPE	COLUMN CONNECTION TO BOOT	FLOOR CONNECTION TO BOOT (7 1/2" EMBED)	STRAP TRACK #12 SCREWS
BW1	1	SEE ARCH	600C/STW250-54	(2)STRAPS 4"-54GA	SMALL BOOT	(2)1/2"Ø A325 BOLTS	(2)7/8"Ø *	8
BW2	1	SEE ARCH	(2)362C/STW200-43	(2)STRAPS 4"-54GA	SMALL BOOT	(2)1/2"Ø A325 BOLTS	(2)7/8"Ø*	8

4 S403 SCHEDULE
3/4" = 1'-0"
NOTES:
1. SEE 1/S403 FOR ELEVATION.
2. SEE PLANS FOR BRACED WALL LOCATIONS.
3. ALL COMPONENTS OF BRACED WALL SYSTEM SHALL HAVE A MINIMUM YIELD STRESS OF fy = 50 KSI.
4. STRAPS ARE REQUIRED ON BOTH SIDES OF WALL.
5. ALL NOTES THIS SHEET SPECIFY STIFFWALL SW-S BY THE STEEL NETWORK. ALTERNATE SUPPLIERS MUST BE SUBMITTED TO ENGINEER FOR REVIEW AND APPROVAL. ALTERNATE SYSTEM MUST MEET THE LOAD REQUIREMENTS GIVEN IN SCHEDULE.
6. THREADED RODS TO BE SET IN SIMPSON SET-XP OR EQUAL.
7. "*" ANCHOR TO EXTEND THROUGH CMU FOUNDATION WALL INTO FOOTING.

adwarchitects
environments for life
architecture planning interiors
101 WEST WORTHINGTON AVENUE
CHARLOTTE, NORTH CAROLINA 28203
P704.379.1919
F704.379.1920
www.adwarchitects.com

STEWART
200 S COLLEGE ST
SUITE 270
CHARLOTTE, NC 28202
T 704.334.7925
FIRM LICENSE #C-1051
PROJECT #R14053

NCDOT Division 7: Roadside Environmental & Bituminous Unit Support Facility

Alamance County
Graham, NC

Construction Documents
Submittal SCO
#13-10060-01A

TYPICAL METAL STUD DETAILS

DATE: March 10, 2015
PROJECT NO: 13070

REVISIONS:
NO: DATE: DESCRIPTION:

THIS DRAWING IS THE PROPERTY OF ADW ARCHITECTS, PA. AND SHALL NOT BE REPRODUCED OR COPIED IN WHOLE OR PART. IT SHALL NOT BE USED ON ANY OTHER PROJECT OR GIVEN TO ANY OTHER COMPANY OR AGENCY WITHOUT THE CONSENT IF ADW ARCHITECTS, PA.

SEAL
NORTH CAROLINA PROFESSIONAL SEAL 26465 ENGINEER LANCE D. WILLIAMS
03/10/2015

SHEET NUMBER
S403

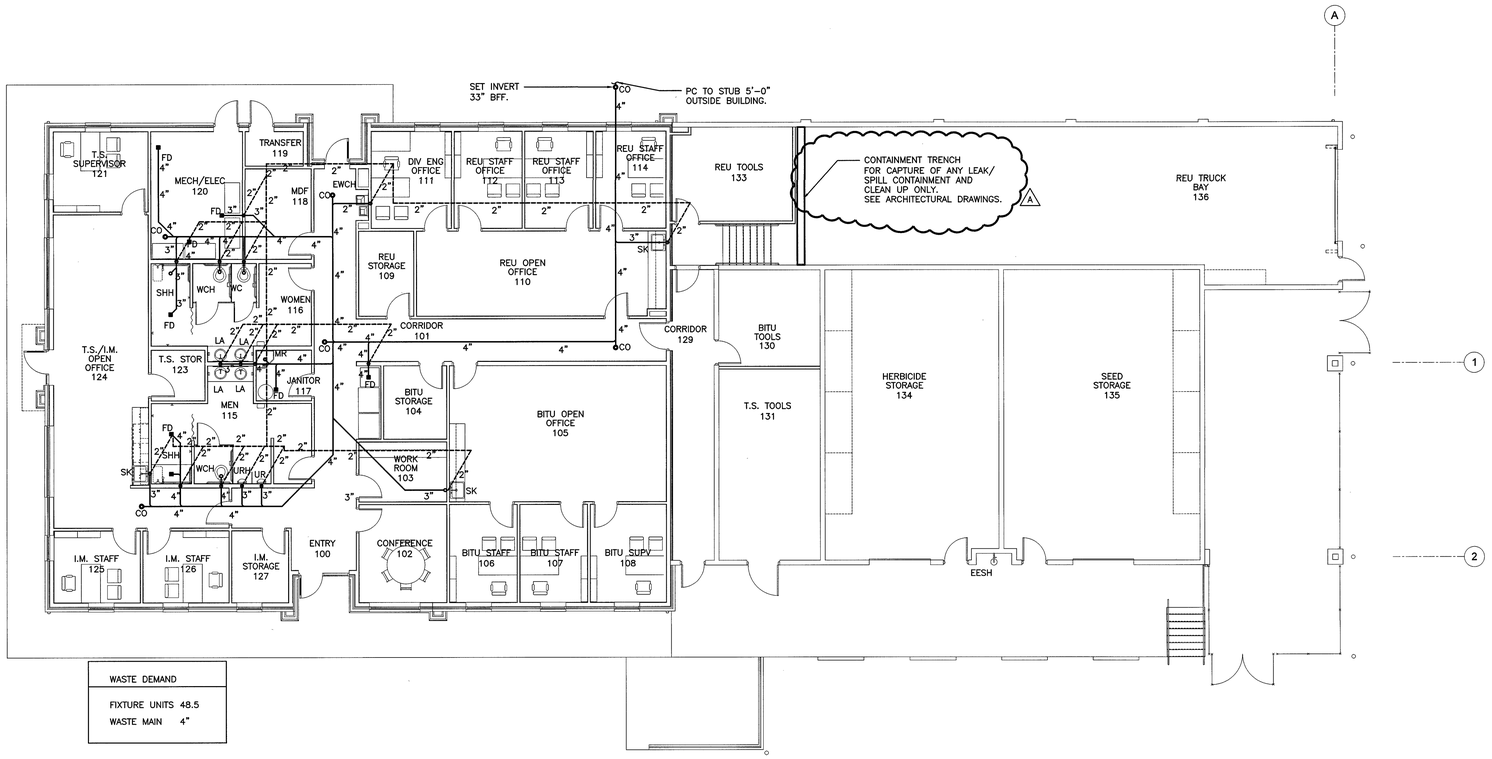

WASTE DEMAND	
FIXTURE UNITS	48.5
WASTE MAIN	4"

FLOOR PLAN - WASTE

SCALE: 1/8" = 1'-0"

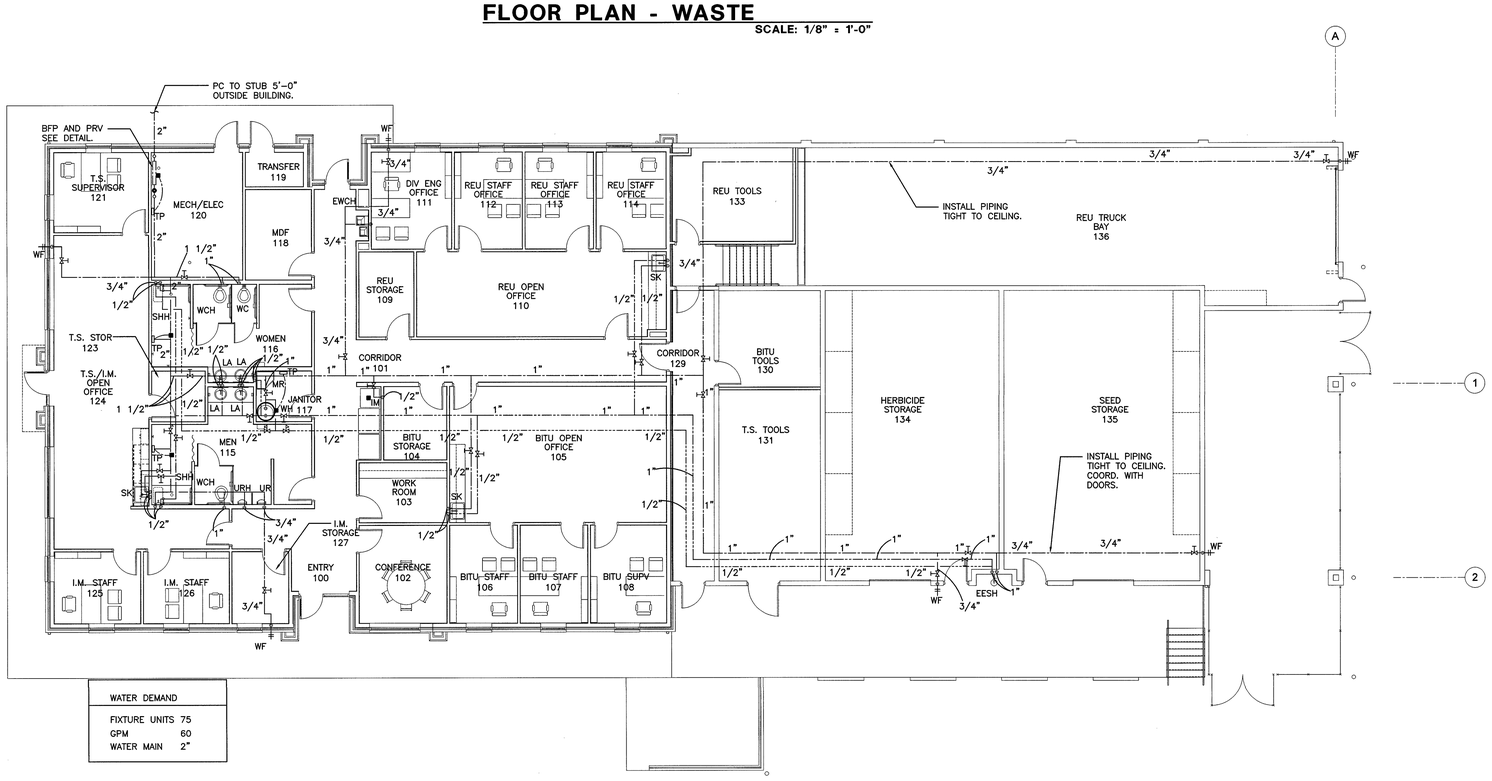

WATER DEMAND	
FIXTURE UNITS	75
GPM	60
WATER MAIN	2"

FLOOR PLAN - WATER

SCALE: 1/8" = 1'-0"

GRAPHIC SCALE

NORTH

1003140RB151500

adwarchitects
environmentsforlife
architecture planning interiors
101 WEST WORTHINGTON AVENUE
CHARLOTTE, NORTH CAROLINA 28203
P704.379.1919
F704.379.1920
www.adwarchitects.com

BEI
BRITTAIN ENGINEERING, INC.
CONSULTING MECHANICAL AND ELECTRICAL ENGINEERS
PO BOX 939 HICKORY, NC 28603
TEL. (828) 328-1813 FAX. (828) 328-1814

NCDOT Division 7: Roadside Environmental & Bituminous Unit Support Facility

Alamance County
Graham, NC

Construction Documents
Submittal SCO
#13-10060-01A

FLOOR PLAN
PLUMBING

DATE March 10, 2015
PROJECT NO 13070

REVISIONS

NO	DATE	DESCRIPTION:
1	05.08.15	SCO Review Comments

THIS DRAWING IS THE PROPERTY OF ADW ARCHITECTS, PA. AND SHALL NOT BE REPRODUCED OR COPIED IN WHOLE OR IN PART. IT SHALL NOT BE USED ON ANY OTHER PROJECT OR GIVEN TO ANY OTHER COMPANY OR AGENCY WITHOUT THE CONSENT OF ADW ARCHITECTS, PA.

NORTH CAROLINA PROFESSIONAL SEAL 7883 ENGINEER DAVID R. BRITTAIN 06/09/15

SHEET NUMBER P1

PLUMBING FIXTURE SCHEDULE

NOTE: ALL FIXTURE APPURTENANCES SHALL BE SUPPLIED BY FIXTURE MANUFACTURER.

FIXTURE SYMBOL	FIXTURE TYPE	FIXTURE DESCRIPTION	CONNECTION SIZES W	V	CW	HW
WC	WATER CLOSET	KOHLER WELLCOMME K-4350 VITREOUS CHINA, FLUSH VALVE, FLOOR MOUNTED, SIPHON JET, ELONGATED BOWL. PROVIDE BEMIS #1655-C OPEN FRONT WHITE SEAT, LESS COVER. WATER CLOSET SHALL BE FURNISHED WITH SLOAN REGAL #113-1.6-XL-YK FLUSH VALVE.	4"	2"	1"	–
WCH	WATER CLOSET (HANDICAPPED)	KOHLER HIGHCLIFF K-4368 VITREOUS CHINA, FLUSH VALVE, FLOOR MOUNTED, SIPHON JET, ELONGATED BOWL. PROVIDE BEMIS #1655-C OPEN FRONT WHITE SEAT, LESS COVER. WATER CLOSET SHALL BE FURNISHED WITH SLOAN REGAL #113-1.6-XL-YK FLUSH VALVE.	4"	2"	1"	
LA	COUNTER LAVATORY	KOHLER #K-2196/DELTA 523-HDF-DST FAUCET AND PERFORATED DRAIN KOHLER #K-7601,WITH WHEEL OPERATED VALVE/MCGUIRE #8872-C-F, P" TRAP	2"	1 1/2"	1/2"	1/2"
URH	URINAL HANDICAP	KOHLER #K-4960-ET "BARDON" WITH 3/4" TOP SPUD/SLOAN REGAL 186-0.5-XL-YK FLUSH VALVE/SCREWDRIVER OPERATED ANGLE STOP/ VACUUM BREAKER AND CAST BRASS WALL ESCUTCHEON WITH SET SCREW/ZURN MATCHING CONCEALED FLOOR-MOUNTED CARRIER, MOUNT RIM 17" A.F.F. MAX	2"	1 1/2"	3/4"	
UR	URINAL	KOHLER #K-4960-ET "BARDON" WITH 3/4" TOP SPUD/SLOAN REGAL 186-0.5-XL-YK FLUSH VALVE/SCREWDRIVER OPERATED ANGLE STOP/ VACUUM BREAKER AND CAST BRASS WALL ESCUTCHEON WITH SET SCREW/ZURN MATCHING CONCEALED FLOOR-MOUNTED CARRIER, MOUNT RIM 24" A.F.F.	2"	1 1/2"	3/4"	
SHH	SHOWER HANDICAP	TILE SHOWER WITH JOSAM 30000-6S-92 DRAIN WITH SYMMONS "HYDAPIPE" 1-902-FSB-HC1 SHOWER VALVE WITH GRAB BARS AND SEAT.	3"	2"	1/2"	1/2"
MR	MOP RECEPTOR	FIAT #MSB-2424"MOLDED STONE" 24" X 24" X 10" MOP SERVICE SINK WITH INTEGRAL CAST BRASS DRAIN/ #830-AA FITTING/BUCKET HOOK 3/4" HOSE THREAD END/VACUUM BREAKER AND ADJUSTABLE TOP BRACE/#889- CC MOP HANGER AND #832-AA HOSE AND WALL HOOK AND MODEL E-88-AA BUMPERGUARD.	3"	2"	1/2"	1/2"
A IM	ICEMAKER VALVE BOX	OATEY 6" SQUARE PVC VALVE BOX WITH CHROME PLATED BRASS STOP VALVE IN WALL FOR ICEMAKER IN REFRIGERATOR. PC TO PROVIDE INLINE BACK FLOW PREVENTER DEVICE WITH ICE MAKER VALVE BOX.			1/2"	
WF	WALL FAUCET	WOODFORD MODEL 65 FREEZELESS WALL HYDRANT/VACUUM BREAKER BACKFLOW PREVENTER, MOUNT 24" A.F. GRADE			3/4"	
HB	HOSE BIBB	WOODFORD MODEL 24P-1/2 WALL FAUCET WITH WHEEL HANDLE AND VACUUM BREAKER BACKFLOW PREVENTER, MOUNT 18" A.F.F.			1/2"	
WH	WATER HEATER	LOCHINVAR MODEL #ETT050PD, 50 GALLON ELECTRIC WATER HEATER WITH TWO (2) 6000 WATT ELEMENTS, 208 VOLT, THEEE PHASE, NON-SIMULTANEOUS WIRING WITH 3 YEAR WARRANTY. FURNISH WITH A.S.M.E. APPROVED RELIEF VALVE & PROPER SIZED EXPANSION TANK.			3/4"	3/4"
RCP	RECIRCULATION PUMP	BELL & GOSSETT MODEL PL-30 ALL BRONZE PUMP, 1/12 HP, 1ø, 115V, 10 GPM @ 10' HD. 3/4" FLANGED CONNECTIONS.				1/2"
EWCH	ELECTRIC WATER COOLER HANDICAP	OASIS PBACSL WALL HUNG BI-LEVEL ELECTRIC WATER COOLER, 8.0 GPH, 1/4 HP., 115V., 460W., ROUGH STOP SUPPLY, STAINLESS STEEL FINISH & CABINET, C.P.B. "P" TRAP, MOUNT RIM 40" A.F.F.	2"	1 1/2"	1/2"	

PLUMBING FIXTURE SCHEDULE

NOTE: ALL FIXTURE APPURTENANCES SHALL BE SUPPLIED BY FIXTURE MANUFACTURER.

FIXTURE SYMBOL	FIXTURE TYPE	FIXTURE DESCRIPTION	CONNECTION SIZES W	V	CW	HW
FD	FLOOR DRAIN	JOSAM #30000-6S-92-50 SERIES CAST IRON FLOOR DRAIN WITH GALVANIZED INTERIOR AND 6" SQUARE STRAINER/TRAP PRIMER CONNECTION.	4"	2"	1/2"	
TP	TRAP PRIMER	PRECISION PRODUCTS INC. "PRIME-RITE" TRAP PRIMER VALVE, MACHINED BRASS, 1/2" MALE NPT INLET, 1/2" FEMALE NPT OUTLET. PROVIDE DISTRIBUTION UNIT AS APPLICABLE FOR MULTIPLE FLOOR DRAINS.			1/2"	
SK	SINGLE COMP. SINK	JUST SL-ADA-2122-A-GR, 21" X 22" LEDGE TYPE, 18 GAUGE 304 STAINLESS STEEL SINK 4 1/2" DEEP. DELTA 27C4844 FAUCET WITH AERATOR. JUST #J35 STAINLESS CRUMB STRAINER WITH REMOVEABLE BASKET WITH RUBBER SEAT STOPPER AND 1 1/2" STAINLESS TAILPIECE. KOHLER #7607 3/8" FLEXIBLE LAVATORY SUPPLY UNIT WITH WHEEL OPERATED ANGLE VALVE AND CAST BRASS WALL ESCUTCHEON AND SET SCREW. MCGUIRE #8912C-F, 1 1/2" ADJUSTABLE SEMI-CAST BRASS "P" TRAP WITH INTEGRAL THREAD CLEANOUT PLUG, OUTLET TO WALL AND CAST BRASS ESCUTCHEON.	2"	1 1/2"	1/2"	1/2"
EWSH	EYEWASH SHOWER	GUARDIAN MODEL GFR3100 HEATED SAFETY STATION WITH EYEWASH AND SHOWER. GUARDIAN MODEL 3800 MIXING VALVE.			1 1/4"	

ACCEPTABLE MANUFACTURERS:

WATER CLOSETS, URINALS, LAVATORIES: KOHLER, AMERICAN STANDARD, ELJER, CRANE, TOTO, ZURN ONE, GERBER, MANSFIELD.

CARRIERS – WADE, SMITH, ZURN, MIFAB.

SINKS – KOHLER, AMERICAN STANDARD, JUST, ELKAY, AMERICAN STANDARD, ZURN, CECO.

TUBS, SHOWERS – AQUAGLASS, FIAT, KOHLER, AMERICAN STANDARD.

SHOWER VALVE ASSEMBLIES – SYMMONS, T&S, LEONARD, POWERS, AMERICAN STANDARD.

WATER HEATERS – STATE, BOCK, LOCHINVAR, BRADFORD WHITE, A.O. SMITH, RHEEM.

HOSE BIBBS – ZURN, WOODFORD, NIBCO, PRIER.

WALL FAUCETS – WOODFORD, ZURN, WADE, SMITH, MIFAB, PRIER.

FLOOR DRAINS, ROOF DRAINS, FLOOR SINKS – WADE, SMITH, ZURN, JOSAM, SIOUX CHIEF, WATTS DRAINAGE, MIFAB.

FLUSH VALVES – DELANY, SLOAN, ZURN, HYDROTEK.

MOP RECEPTOR – FIAT, FLORSTONE, WILLIAMS, AMERICAN STANDARD.

RECIRCULATION PUMP – BELL & GOSSETT, TACO, GRUNDFOS

FAUCETS – DELTA, SYMMONS, T&S, AMERICAN STANDARD, MOEN, CHICAGO FAUCETS.

WATER COOLERS – ELKAY, OASIS, HALSEY TAYLOR, ACORN AQUA.

PLUMBING LEGEND

SYMBOL	DESCRIPTION
	SANITARY WASTE
	SANITARY VENT
	DOMESTIC COLD WATER
	DOMESTIC HOT WATER
	DOMESTIC HOT WATER RECIRC.
	SHUT-OFF VALVE
	COMBINATION FLOW CONTROL/ BALL VALVE
	CUT-OFF VALVE IN RISER
	RISER UP AND RISER DOWN
	CLEANOUT (CO)
	HOSE BIBB (HB) OR WALL HYDRANT (WF)
VTR	VENT THRU ROOF
SA	SHOCK ABSORBER "WATER HAMMER"
E.C.	ELECTRICAL CONTRACTOR
M.C.	MECHANICAL CONTRACTOR

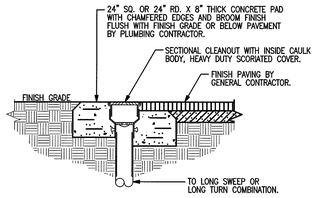

NOTE:
OMIT CONCRETE PAD IF C.O. IS SET IN CONC. SURFACE PROVIDED BY GENERAL CONTRACTOR.

B CLEANOUT AT FINISH GRADE

SCALE: NONE

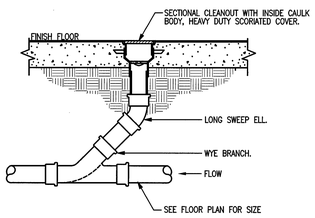

C CLEANOUT AT FINISH FLOOR

SCALE: NONE

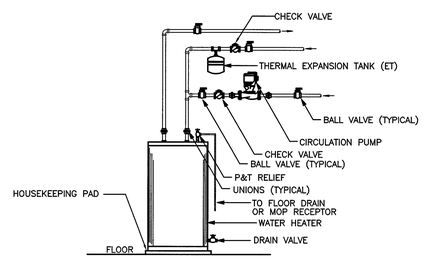

NOTE: PROVIDE TIME SWITCH FOR RECIRCULATING PUMP PER SECTION 504.6 OF NC ENERGY CONSERVATION CODE.

A ELECTRIC WATER HEATER

SCALE: NONE

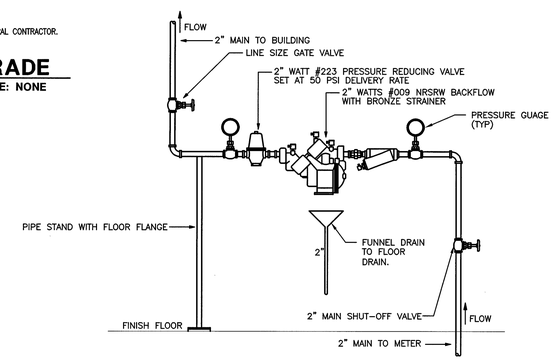

D WATER PRESSURE REDUCING VALVE AND BACKFLOW PREVENTER STATION

SCALE: NONE

100314DRB151500

adwarchitects
environmentsforlife
architecture planning interiors
101 WEST WORTHINGTON AVENUE
CHARLOTTE, NORTH CAROLINA 28203
P704.379.1919
F704.379.1920
www.adwarchitects.com

BRITTAIN ENGINEERING, INC.
CONSULTING MECHANICAL AND ELECTRICAL ENGINEERS
PO BOX 990 HICKORY, NC 28603
TEL. (828) 326-1613 FAX. (828) 326-1814

NCDOT Division 7: Roadside Environmental & Bituminous Unit Support Facility

Alamance County
Graham, NC

Construction Documents
Submittal SCO
#13-10060-01A

FIXTURE SCHEDULE & DETAILS

DATE March 10, 2015
PROJECT NO 13070

REVISIONS

NO	DATE	DESCRIPTION:
A	05.08.15	SCO Review Comments

THIS DRAWING IS THE PROPERTY OF ADW ARCHITECTS, PA, AND SHALL NOT BE REPRODUCED OR COPIED IN WHOLE OR IN PART. IT SHALL NOT BE USED ON ANY OTHER PROJECT OR GIVEN TO ANY OTHER COMPANY OR AGENCY WITHOUT THE CONSENT OF ADW ARCHITECTS, PA.

NORTH CAROLINA PROFESSIONAL SEAL 7883 ENGINEER
05/04/15

SHEET NUMBER P2

ELECTRIC WALL HEATER SCHEDULE

UNIT NO.	SERVICE	CFM	△T °F	STAGES	KW	POWER	MANUFACTURER CATALOG NO.
EWH-1	CORRIDOR 129	–	27	1	2.0	208V, 1PH	TRANE UHWA–021A2AT
EWH-2	CORRIDOR 129	–	27	1	2.0	208V, 1PH	TRANE UHWA–021A2AT
EWH-3	T.S. SIGNS	–	57	1	4.0	208V, 3PH	TRANE UHWA–043A2AT
EWH-4	MECH/ELEC 120	–	41	1	3.0	208V, 1PH	TRANE UHWA–031A2AT
EWH-5	REU TOOLS 133	–	27	1	2.0	208V, 1PH	TRANE UHWA–021A2AT
EWH-6	BITU TOOLS 130	–	27	1	2.0	208V, 1PH	TRANE

ACCEPTABLE MANUFACTURERS: TRANE, INDEECO, RAYWALL, MARKEL, BERKO.
BUILT–IN CIRCUIT BREAKER, THERMOSTAT, SERIES 20 WALL BOX.

A

SEE DETAIL "F", SHEET M2 FOR SUPPLY AND RETURN GRILLE CONNECTION DETAILS. ALL OPEN OFFICE SPACE HAVE 10'–0" CEILINGS, LEAVING 1'–2" OF CEILING SPACE. (TYPICAL ROOMS 102, 105, 110 & 124).

ELECTRIC UNIT HEATER SCHEDULE

UNIT NO.	SERVICE	CFM	△T °F	STAGES	KW	POWER	MANUFACTURER CATALOG NO.
EUH-1	STORAGE	700	45	1	10.0	208V, 3PH	TRANE UHEC–102AACA
EUH-2	STORAGE	700	45	1	10.0	208V, 3PH	TRANE UHEC–102AACA
EUH-3	TRUCK BAY	1100	57	1	25.0	208V, 3PH	TRANE UHEC–253AACA
EUH-4	TRUCK BAY	1100	57	1	25.0	208V, 3PH	TRANE UHEC–253AACA

ACCEPTABLE MANUFACTURERS: TRANE, INDEECO, RAYWALL, MARKEL, BERKO.
WALL MOUNTED THERMOSTAT WITH GUARD, VERTICAL HANGING BRACKET.

AIR DISTRIBUTION DEVICE SCHEDULE

TYPE	DESCRIPTION NECK SIZE	MOUNTING	MANUFACTURER CATALOG NO. PRICE	MATERIAL	FINISH	ACCESSORIES/ REMARKS
D1	SUPPLY DIFFUSER 9" X 9" X 6"ø	CEILING LAY–IN	SMD	STEEL	WHITE	BORDER TYPE 3P, SR ADAPTER
D2	SUPPLY DIFFUSER 12" X 12" X 8"ø	CEILING LAY–IN	SMD	STEEL	WHITE	BORDER TYPE 3P, SR ADAPTER
D3	SUPPLY DIFFUSER 15" X 15" X 10"ø	CEILING LAY–IN	SMD	STEEL	WHITE	BORDER TYPE 3P, SR ADAPTER
D4	SUPPLY DIFFUSER 12" X 12" X 8"ø	CEILING LAY–IN	AMD	ALUMINUM	WHITE	BORDER TYPE 3P, SR ADAPTER
G1	RETURN GRILLE 22" X 22" X 8"ø	CEILING LAY–IN	535	STEEL	WHITE	BORDER TYPE TB, SR ADAPTER
G2	RETURN GRILLE 22" X 22" X 10"ø	CEILING LAY–IN	535	STEEL	WHITE	BORDER TYPE TB, SR ADAPTER
G3	RETURN GRILLE 22" X 22" X 12"ø	CEILING LAY–IN	535	STEEL	WHITE	BORDER TYPE TB, SR ADAPTER

ACCEPTABLE MANUFACTURERS: PRICE, METALAIRE, TITUS, NAILOR.

FAN SCHEDULE

DESIG.	SERVES MOUNT	CFM	EXT. S.P.	RPM	WATTS H.P.	VOLTS PHASE	MFG./PART NO. GREENHECK	SONES	DRIVE	REMARKS
EF-1	TOILET	250	0.25	1034	81 W	120V/1ø	SP–A290	2.5	DIRECT	RJ–10X10 ROOF JACK, BACKDRAFT DAMPER, DISCONNECT SWITCH BIRDSCREEN
EF-2	TOILET	250	0.25	1034	81 W	120V/1ø	SP–A290	2.5	DIRECT	TIE INTO EF–1 ROOF JACK, BACKDRAFT DAMPER, DISCONNECT SWITCH BIRDSCREEN
EF-3	JAN	100	0.25	1083	53 W	120V/1ø	SP–A125	1.2	DIRECT	TIE INTO EF–1 ROOF JACK, BACKDRAFT DAMPER, DISCONNECT SWITCH BIRDSCREEN
F-1	HERBICIDE	1000	0.25	1359	1/4	120V/1ø	SQ–100–VG	6.3	DIRECT	GRS–16 ROOF JACK W/ CURB, BACKDRAFT DAMPER, DISCONNECT SWITCH, BIRDSCREEN, INTERLOCK W/ LOUVER L–1, WALL SWITCH
F-2	SEED	1150	0.25	1515	1/4	120V/1ø	SQ–100–VG	7.5	DIRECT	GRS–16 ROOF JACK W/ CURB, BACKDRAFT DAMPER, DISCONNECT SWITCH, BIRDSCREEN, INTERLOCK W/ LOUVER L–1, WALL SWITCH
F-3	TRUCK BAY	2,100	0.25	1629	3/4	120V/1ø	SQ–130–VG	11.6	DIRECT	GRS–16 ROOF JACK W/ CURB, BACKDRAFT DAMPER, DISCONNECT SWITCH, BIRDSCREEN, INTERLOCK W/ LOUVER L–1, CARBON MONOXIDE SENSOR.
F-4	T.S. TOOLS	75	0.25	912	49 W	120V/1ø	SP–A110	1.4	DIRECT	RJ–6X9 ROOF JACK, BACKDRAFT DAMPER, DISCONNECT SWITCH BIRDSCREEN, WALL SWITCH
F-5	BITU TOOLS	75	0.25	912	49 W	120V/1ø	SP–A110	1.4	DIRECT	RJ–6X9 ROOF JACK, BACKDRAFT DAMPER, DISCONNECT SWITCH BIRDSCREEN, WALL SWITCH
F-6	REU TOOLS	75	0.25	912	49 W	120V/1ø	SP–A110	1.4	DIRECT	RJ–6X9 ROOF JACK, BACKDRAFT DAMPER, DISCONNECT SWITCH BIRDSCREEN, WALL SWITCH

ACCEPTABLE MANUFACTURERS: GREENHECK, LOREN COOK, AMERICAN COOLAIR.

A

LOUVER SCHEDULE

DESIG.	SIZE W X H	CFM	MANUFACTURER AND MODEL NO.	MATERIAL	FINISH	ACCESSORIES/ REMARKS
L-1	36" X 16"	1,000	GREENHECK EDD–601	ALUMINUM	KYNAR	(1)
L-2	36" X 16"	1,150	GREENHECK EDD–601	ALUMINUM	KYNAR	(1)
L-3	36" X 24"	2,100	GREENHECK EDD–601	ALUMINUM	KYNAR	(1)
L-4	36" X 16"	600	GREENHECK EDD–601	ALUMINUM	KYNAR	(1)

ACCEPTABLE MANUFACTURERS: GREENHECK, RUSKIN, LEADER, UNITED ENERTECH, DOWCO.

(1) OPPOSED BLADE CONTROL DAMPER WITH BLADE AND JAMB SEALS, LINKAGE AND JACKSHAFTING, ELECTRIC MOTOR OPERATORS, 120 VOLTS, 1–PHASE, OPERATOR FRAME MOUNTING BRACKET, COLOR SELECTED BY ARCHITECT.

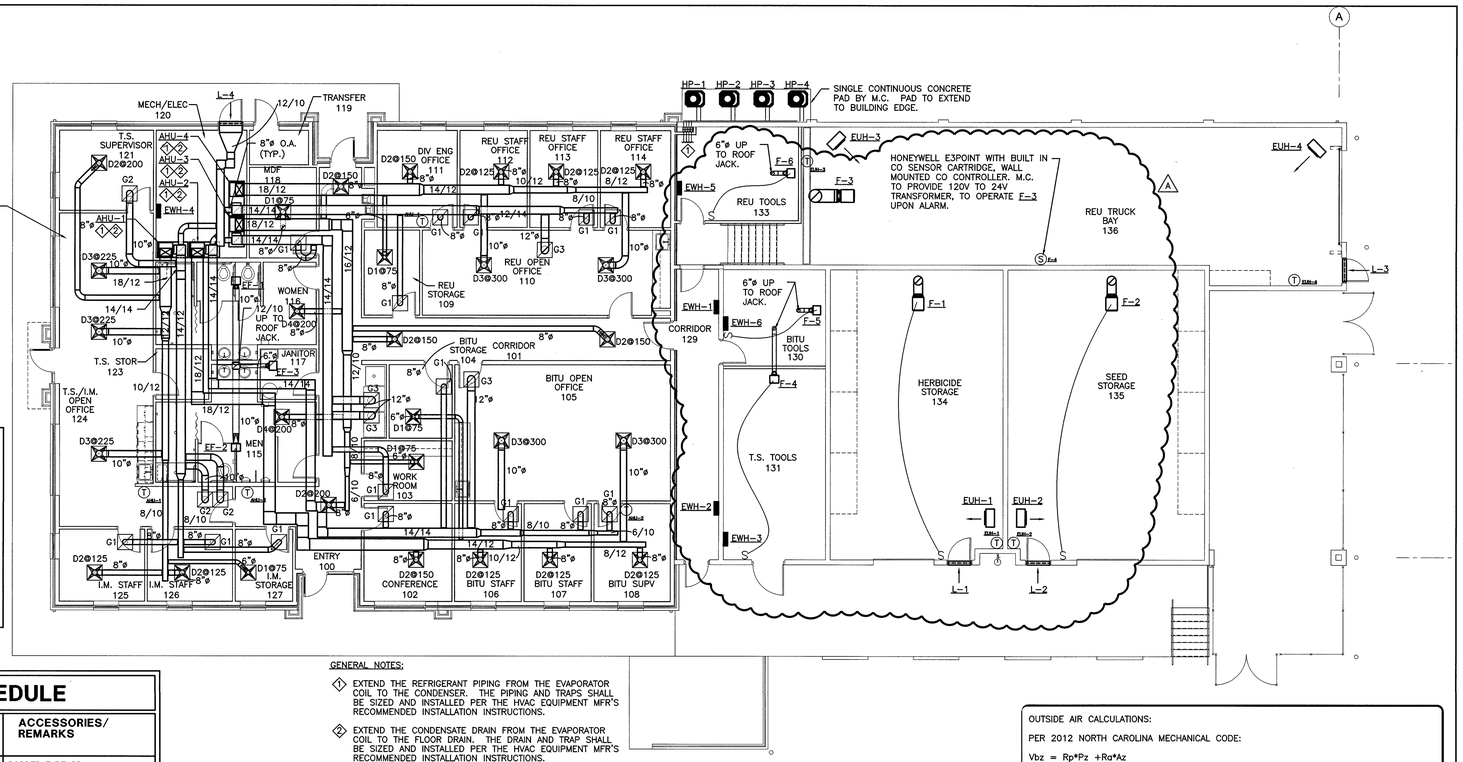

GENERAL NOTES:

1. EXTEND THE REFRIGERANT PIPING FROM THE EVAPORATOR COIL TO THE CONDENSER. THE PIPING AND TRAPS SHALL BE SIZED AND INSTALLED PER THE HVAC EQUIPMENT MFR'S RECOMMENDED INSTALLATION INSTRUCTIONS.
2. EXTEND THE CONDENSATE DRAIN FROM THE EVAPORATOR COIL TO THE FLOOR DRAIN. THE DRAIN AND TRAP SHALL BE SIZED AND INSTALLED PER THE HVAC EQUIPMENT MFR'S RECOMMENDED INSTALLATION INSTRUCTIONS.

FLOOR PLAN - HVAC

SCALE: 1/8" = 1'-0"

PACKAGED SPLIT HEAT PUMP SCHEDULE

		AHU-1	AHU-2	AHU-3	AHU-4
UNIT NUMBER		AHU-1	AHU-2	AHU-3	AHU-4
AREA SERVED		OFFICE SPACE	OFFICE SPACE	OFFICE SPACE	OFFICE SPACE
MANUFACTURER		LENNOX	LENNOX	LENNOX	LENNOX
MODEL NUMBER		CBX32M–036	CBX32M–036	CBX32M–036	CBX32M–036
UNIT WEIGHT		183 LBS	183 LBS	183 LBS	183 LBS
FAN	TOTAL AIR CFM	1,200	1,200	1,200	1,200
	OUTSIDE AIR CFM	150	150	175	150
	FAN H.P.	1/2	1/2	1/2	1/2
	EXT. S.P. (IN. H2O)	0.60	0.60	0.60	0.60
	POWER SUPPLY	208V/1ø/60	208V/1ø/60	208V/1ø/60	208V/1ø/60
COOLING COIL	FACE VELOCITY FPM	240	240	240	240
	COIL AIR CFM	1,200	1,200	1,200	1,200
	TOTAL CAPACITY COOLING	34,800 BTUH	34,800 BTUH	34,800 BTUH	34,800 BTUH
	SENSIBLE CAPACITY COOLING	23,300 BTUH	23,300 BTUH	23,300 BTUH	23,300 BTUH
	SEER	14.7	14.7	14.7	14.7
	ENTERING AIR TEMP.	80.0 DB/67.0 WB	80.0 DB/67.0 WB	80.0 DB/67.0 WB	80.0 DB/67.0 WB
FILTER	TYPE	1" THROWAWAY	1" THROWAWAY	1" THROWAWAY	1" THROWAWAY
	QUANTITY AND SIZE	(1) 20" X 20" X 1"	(1) 20" X 20" X 1"	(1) 20" X 20" X 1"	(1) 20" X 20" X 1"
HEATING CAPACITY	ENTERING AIR TEMP.	75 °F	75 °F	75 °F	75 °F
	HIGH TEMPERATURE 47°F DB/43°F WB	33.2 MBH	33.2 MBH	33.2 MBH	33.2 MBH
	LOW TEMPERATURE 17°F DB/15°F WB	20.8 MBH	20.8 MBH	20.8 MBH	20.8 MBH
	COP	3.0	3.0	3.0	3.0
	AUXILIARY COIL CAPACITY	7.5 KW @ 208V	7.5 KW @ 208V	7.5 KW @ 208V	7.5 KW @ 208V
	POWER SUPPLY	208V/3ø/60	208V/3ø/60	208V/3ø/60	208V/3ø/60
	MCA AMPS	31.0	31.0	31.0	31.0
	MOP AMPS	35.0	35.0	35.0	35.0
AIR COOLED CONDENSING UNIT	UNIT NUMBER	HP-1	HP-2	HP-3	HP-4
	MODEL NUMBER	14HPX–036	14HPX–036	14HPX–036	14HPX–036
	UNIT WEIGHT	205 LBS	205 LBS	205 LBS	205 LBS
	ENTERING AIR TEMP.	95°F	95°F	95°F	95°F
	FAN TYPE	PROPELLER	PROPELLER	PROPELLER	PROPELLER
	FAN H.P.	1/6	1/6	1/6	1/6
	COMPRESSOR	SCROLL	SCROLL	SCROLL	SCROLL
	POWER SUPPLY	208V/1ø/60	208V/1ø/60	208V/1ø/60	208V/1ø/60
	MCA AMPS	18.7	18.7	18.7	18.7
	MOP AMPS	30.0	30.0	30.0	30.0
ACCESSORIES		ECB40–10 ELECT. HEAT, SINGLE PT. POWER,	ECB40–10 ELECT. HEAT, SINGLE PT. POWER,	ECB40–10 ELECT. HEAT, SINGLE PT. POWER,	ECB40–10 ELECT. HEAT, SINGLE PT. POWER,

ACCEPTABLE MANUFACTURERS: RHEEM, TRANE, LENNOX, CARRIER, YORK, DAIKIN.

(1) PROGRAMMABLE SETBACK THERMOSTAT, ANTI–SHORT CYCLE TIMER, AND CONDENSER COIL GUARD.

OUTSIDE AIR CALCULATIONS:

PER 2012 NORTH CAROLINA MECHANICAL CODE:

Vbz = Rp*Pz +Ra*Az
Vbz = OUTDOOR AIR RATE IN BREATHING ZONE
Az = FLOOR AREA OF SPACE
Pz = # PEOPLE IN SPACE
Rp = PEOPLE OUTDOOR AIR RATE
Ra = AREA OUTDOOR AIR RATE

AHU–1
OFFICE SPACE
Vbz = 5 CFM/PERSON*(800 S.F.*5 PEOPLE/1000 S.F.) + 0.06 CFM/S.F.*800 S.F.
Vbz = 68 CFM OUTSIDE AIR

STORAGE = 0.12 CFM/S.F.
115 S.F. X 0.12 CFM/S.F. = 14 CFM

CORRIDOR = 0.06 CFM/S.F.
72 S.F. X 0.06 CFM/S.F. = 4 CFM

86 CFM OUTSIDE AIR REQUIRED.
150 CFM OUTSIDE AIR SUPPLIED VIA AHU–1.

AHU–2
OFFICE SPACE
Vbz = 5 CFM/PERSON*(900 S.F.*5 PEOPLE/1000 S.F.) + 0.06 CFM/S.F.*900 S.F.
Vbz = 77 CFM OUTSIDE AIR

STORAGE = 0.12 CFM/S.F.
77 S.F. X 0.12 CFM/S.F. = 9 CFM

CONFERENCE
Vbz = 5 CFM/PERSON*(145 S.F.*50 PEOPLE/1000 S.F.) + 0.06 CFM/S.F.*145 S.F.
Vbz = 45 CFM OUTSIDE AIR

131 CFM OUTSIDE AIR REQUIRED.
150 CFM OUTSIDE AIR SUPPLIED VIA AHU–2.

AHU–3
OFFICE SPACE
Vbz = 5 CFM/PERSON*(88 S.F.*5 PEOPLE/1000 S.F.) + 0.06 CFM/S.F.*88 S.F.
Vbz = 7 CFM OUTSIDE AIR

CORRIDOR = 0.06 CFM/S.F.
635 S.F. X 0.06 CFM/S.F. = 38 CFM

45 CFM OUTSIDE AIR REQUIRED.
175 CFM OUTSIDE AIR SUPPLIED VIA AHU–3.

AHU–4
OFFICE SPACE
Vbz = 5 CFM/PERSON*(850 S.F.*5 PEOPLE/1000 S.F.) + 0.06 CFM/S.F.*850 S.F.
Vbz = 72 CFM OUTSIDE AIR

STORAGE = 0.12 CFM/S.F.
78 S.F. X 0.12 CFM/S.F. = 9 CFM

81 CFM OUTSIDE AIR REQUIRED.
150 CFM OUTSIDE AIR SUPPLIED VIA AHU–4.

F–1
WAREHOUSE (6 AIR CHANGES FOR SUMMER VENTILATION IS GREATER THAN 0.06 CFM/S.F.)
883 S.F.*11'–6" HIGH*6 AIR CHANGES/HOUR*1 HOUR/60 MIN. = 1000 CFM

1000 CFM OUTSIDE AIR SUPPLIED VIA F–1.

F–2
WAREHOUSE (6 AIR CHANGES FOR SUMMER VENTILATION IS GREATER THAN 0.06 CFM/S.F.)
990 S.F.*11'–6" HIGH*6 AIR CHANGES/HOUR*1 HOUR/60 MIN. = 1139 CFM

1150 CFM OUTSIDE AIR SUPPLIED VIA F–2.

F–3
TRUCK (6 AIR CHANGES FOR SUMMER VENTILATION IS GREATER THAN 0.75 CFM/S.F)
1368 S.F.*15'–6" HIGH*6 AIR CHANGES/HOUR*1 HOUR/60 MIN. = 2100 CFM

2100 CFM OUTSIDE AIR SUPPLIED VIA F–3.

F–4
STORAGE – T.S. TOOLS 131
331 S.F. X 0.12 CFM/S.F. = 40 CFM

75 CFM OUTSIDE AIR SUPPLIED VIA F–4.

F–5
STORAGE – BITU TOOLS 130
168 S.F. X 0.12 CFM/S.F. = 20 CFM

75 CFM OUTSIDE AIR SUPPLIED VIA F–5.

F–6
STORAGE – REU TOOLS 133
192 S.F. X 0.12 CFM/S.F. = 23 CFM

75 CFM OUTSIDE AIR SUPPLIED VIA F–6.

0' 15' 30'
6'
GRAPHIC SCALE

NORTH
030215RB151500

adwarchitects
environmentsforlife
architecture planning interiors
101 WEST WORTHINGTON AVENUE
CHARLOTTE, NORTH CAROLINA 28203
P704.379.1919
F704.379.1920
www.adwarchitects.com

BEI
BRITTAIN ENGINEERING, INC.
CONSULTING MECHANICAL AND ELECTRICAL ENGINEERS
PO BOX 999 HICKORY, NC 28603
TEL. (828) 325-1513 FAX. (828) 325-1514

NCDOT Division 7: Roadside Environmental & Bituminous Unit Support Facility

Alamance County
Graham, NC

Construction Documents
Submittal SCO
#13-10060-01A

FLOOR PLAN
HVAC

DATE March 10, 2015
PROJECT NO 13070

REVISIONS

NO	DATE	DESCRIPTION:
1	05.08.15	SCO Review Comments

THIS DRAWING IS THE PROPERTY OF ADW ARCHITECTS, PA, AND SHALL NOT BE REPRODUCED OR COPIED IN WHOLE OR IN PART. IT SHALL NOT BE USED ON ANY OTHER PROJECT OR GIVEN TO ANY OTHER COMPANY OR AGENCY WITHOUT THE CONSENT OF ADW ARCHITECTS, PA.

NORTH CAROLINA PROFESSIONAL SEAL 7883 ENGINEER DONALD R BRITTAIN 05/04/15

SHEET NUMBER M1

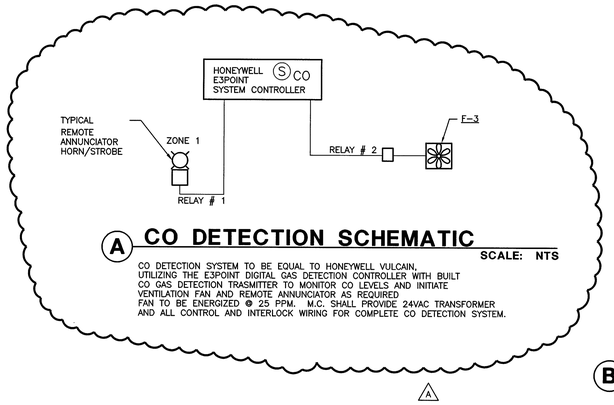

A CO DETECTION SCHEMATIC

SCALE: NTS

CO DETECTION SYSTEM TO BE EQUAL TO HONEYWELL VULCAIN, UTILIZING THE E3POINT DIGITAL GAS DETECTION CONTROLLER WITH BUILT CO GAS DETECTION TRASMITTER TO MONITOR CO LEVELS AND INITIATE VENTILATION FAN AND REMOTE ANNUNCIATOR AS REQUIRED FAN TO BE ENERGIZED @ 25 PPM. M.C. SHALL PROVIDE 24VAC TRANSFORMER AND ALL CONTROL AND INTERLOCK WIRING FOR COMPLETE CO DETECTION SYSTEM.

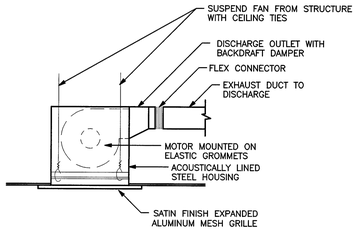

B CEILING MOUNTED EXHAUST FAN

SCALE: NTS

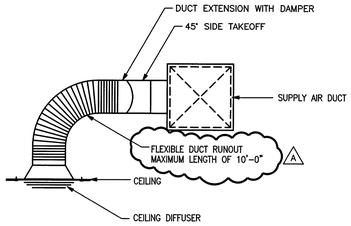

NOTE:
ALL FLEXIBLE DUCT CONNECTIONS SHALL BE IN ACCORDANCE WITH UL 181 AND SMACNA INSTALLATION GUIDELINES.

C DIFFUSER CONNECTIONS

SCALE: NTS

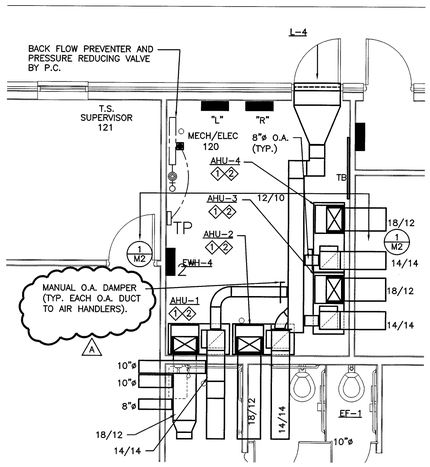

ENLARGED MECH/ELEC FLOOR PLAN - HVAC

SCALE: 1/4" = 1'-0"

MECHANICAL LEGEND

SYMBOL	DESCRIPTION
	SUPPLY AIR DIFFUSER
	RETURN AIR GRILLE OR REGISTER
	EXHAUST AIR GRILLE OR REGISTER
	DUCTWORK
	FLEXIBLE DUCT
	MANUAL VOLUME DAMPER
	TRANSITION RECTANGULAR TO RECTANGULAR
	TRANSITION RECTANGULAR TO ROUND
	ELBOW W/SINGLE THICKNESS VANES
	ADJUSTABLE SPLITTER TEE WITH TURNING VANES (SUPPLY AIR ONLY)
T	THERMOSTAT
FD	FIRE DAMPER – VERTICAL
FD	FIRE DAMPER – HORIZONTAL
	PIPE RISER
	PIPE DROP
	CAP ON END OF MAIN OR PLUGGED TEE
AHU	AIR HANDLING UNIT
AFF	ABOVE FINISHED FLOOR
CU	CONDENSING UNIT
DN	DOWN
E.A. ; E/A	EXHAUST AIR
O.A. ; O/A	OUTSIDE AIR
OBD	OPPOSED BLADE DAMPER
RG	RETURN GRILLE
R.A. ; R/A	RETURN AIR
S.A. ; S/A	SUPPLY AIR
SF	SUPPLY FAN
TYP	TYPICAL
S	MANUAL MOTOR RATED TOGGLE SWITCH

MECHANICAL SYSTEMS, SERVICE SYSTEMS AND EQUIPMENT
METHOD OF COMPLIANCE

Prescriptive ● Energy Cost Budget ____

Climate Zone 4A
Exterior design conditions
winter dry bulb 22.9° F
summer dry bulb 90.3° F DB/75.2° F WB
Interior design conditions
winter dry bulb 72° F
summer dry bulb 75° F
relative humidity 50%
Building heating load 168.3 MBH
Building cooling load 125.37 MBH
Mechanical Spacing Conditioning System
Unitary
description of unit SPLIT SYSTEM HEAT PUMPS
heating efficiency SEE SCHEDULES
cooling efficiency SEE SCHEDULES
heat output of unit SEE SCHEDULES
cooling output of unit SEE SCHEDULES
boiler
total boiler output. If oversized, state reason. N/A
chiller
total chiller capacity. If oversized, state reason. N/A
List equipment efficiencies N/A

Equipment schedules with motors (mechanical systems)
motor horsepower SEE SCHEDULES
number of phases SEE SCHEDULES
minimum efficiency PER NEMA STD MG 1-2003, TABLES 12-10 & 11
motor type ODP
# of poles 4

DESIGNER STATEMENT: [1]
To the best of my knowledge and belief, the design of this building complies with the mechanical systems, service systems and equipments of the North Carolina State Building Code, Energy Conservation Code, 2012 Edition.
SIGNED:
NAME: DONALD R. BRITTAIN
TITLE: NC PROFESSIONAL ENGINEER # 7883

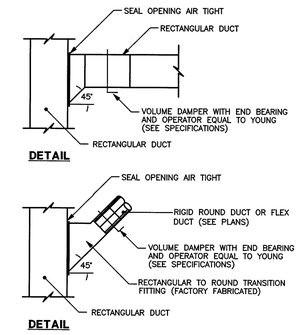

D DUCT TAKE-OFFS

SCALE: NTS

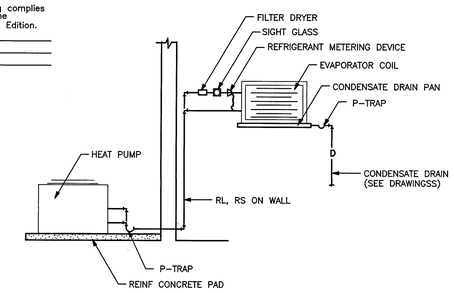

E CONDENSING UNIT ON GROUND PIPING DIAGRAM

SCALE: NTS

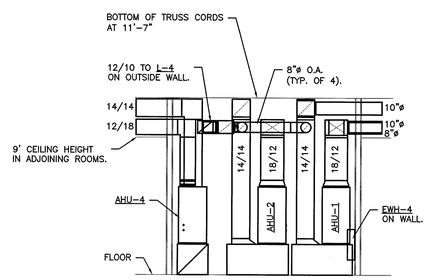

1 ENLARGED MECH/ELEC SECTION - HVAC

SCALE: 1/4" = 1'-0"

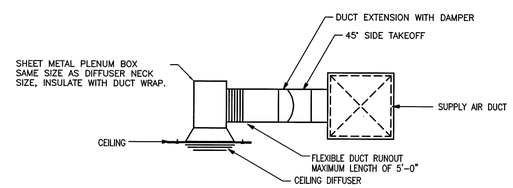

NOTE:
ALL FLEXIBLE DUCT CONNECTIONS SHALL BE IN ACCORDANCE WITH UL 181 AND SMACNA INSTALLATION GUIDELINES.

F DIFFUSER CONNECTIONS

STANDARD FOR ALL SUPPLY AND RETURN GRILLES IN AREAS WITH 10' CEILINGS. 10' CEILINGS ALLOW 1'-2" OF CEILING SPACE.

SCALE: NTS

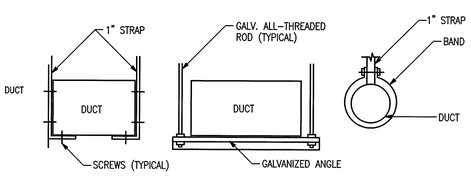

LOW PRESSURE DUCTWORK

G DUCTWORK HANGERS

OR PROVIDE SUPPORTS PER SMACNA TABLES 4-1 AND 7-2, HVAC DUCT CONSTRUCTION STANDARDS

SCALE: NTS

060815RB151500

adwarchitects
environmentsforlife
architecture planning interiors
101 WEST WORTHINGTON AVENUE
CHARLOTTE, NORTH CAROLINA 28203
P704.379.1919
F704.379.1920
www.adwarchitects.com

BRITTAIN ENGINEERING, INC.
CONSULTING MECHANICAL AND ELECTRICAL ENGINEERS
PO BOX 998 HICKORY, NC 28603
TEL. (828) 326-1813 FAX. (828) 326-1814

NCDOT Division 7: Roadside Environmental & Bituminous Unit Support Facility

Alamance County
Graham, NC

Construction Documents
Submittal SCO
#13-10060-01A

DETAILS
HVAC

DATE March 10, 2015
PROJECT NO 13070

REVISIONS

NO	DATE	DESCRIPTION:
1	05.08.15	SCO Review Comments

THIS DRAWING IS THE PROPERTY OF ADW ARCHITECTS, PA, AND SHALL NOT BE REPRODUCED OR COPIED IN WHOLE OR IN PART. IT SHALL NOT BE USED ON ANY OTHER PROJECT OR GIVEN TO ANY OTHER COMPANY OR AGENCY WITHOUT THE CONSENT OF ADW ARCHITECTS, PA.

NORTH CAROLINA PROFESSIONAL SEAL 7883 ENGINEER DONALD R. BRITTAIN 05/08/15

SHEET NUMBER M2

ELECTRICAL SYSTEM AND EQUIPMENT

METHOD OF COMPLIANCE:

Energy Code: Prescriptive ● Performance ____

ASHRAE 90.1: Prescriptive ____ Performance ____

Lighting schedule

lamp type required in fixture	See Fixture Schedule
number of lamps in fixture	See Fixture Schedule
ballast type used in the fixture	See Fixture Schedule
number of ballasts in fixture	See Fixture Schedule
total wattage per fixture	See Fixture Schedule
total interior wattage specified vs allowed	5896 / 6955
total exterior wattage specified vs allowed	1249 / 1805

Additional Prescriptive Compliance

506.2.1 More Efficient Mechanical Equipment ____

506.2.2 Reduced Lighting Power Density ●

506.2.3 Energy Recovery Ventilation Systems ____

506.2.4 Higher Efficiency Service Water Heating ____

506.2.5 On-Site Supply of Renewable Energy ____

506.2.6 Automatic Daylighting Control Systems ____

DESIGNER STATEMENT:[1]
To the best of my knowledge and belief, the design of this building complies with the electrical system and equipment requirements of the North Carolina State Building Code: Energy Conservation Code 2012.

SIGNED: ____

NAME: Donald R. Brittain

TITLE: North Carolina Professional Engineer #7883

ELECTRICAL LEGEND

SYMBOL	DESCRIPTION
	CONDUIT
	CONDUIT UNDERFLOOR OR UNDERGROUND
	ARROW INDICATES HOMERUN, TICKMARKS: NEUTRAL,PHASE,GND.
	POWER PANEL
	EXISTING PANEL
T	TELEPHONE BOARD
T	TELEPHONE CONDUIT
	TELEPHONE OUTLET
J	JUNCTION BOX
	DISCONNECT SWITCH; FUSED; NONFUSED
FPN	FUSE PER NAMEPLATE
S_m	MOTOR TOGGLE SWITCH
	MOTOR
	EXISTING OR BY OTHERS
	LIGHT FIXTURE
S, S_3, S_4	SINGLE POLE SWITCH , 3 WAY, 4 WAY
S_P , S_D	PILOT LIGHT , DIMMER
AFF	ABOVE FINISHED FLOOR
	DUPLEX RECEPT , ABOVE COUNTER
WP , GFI	WEATHERPROOF , GROUND FAULT
	QUAD-PLEX RECEPTACLE
	TELEPHONE/COMPUTER COMBINATION OUTLET
	T.V. OUTLET
	DUPLEX RECEPT TV OUTLET HEIGHT
F	PULL STATION

LIGHTING FIXTURE SCHEDULE

MARK	TYPE	MOUNTING	MANUFACTURER NO.1 CATALOG NO.	MANUFACTURER NO.2 CATALOG NO.	MANUFACTURER NO.3 CATALOG NO.	BALLAST QTY/TYPE	LAMPS QTY/TYPE	TOTAL WATTS	VOLTAGE	REMARKS
A	2' x 4' PARABLOIC	LAY-IN	LITHONIA 2ESBP 2 32 MVOLT BINP L841 HT8	NULITE PBG-12C-232-UNV-IS-SD	PRUDENTIAL PB0245-2T8-12PL-S-SD	1) ELECTRONIC	2) F32T8/841	55W	MVOLT	
D	6" DOWNLIGHT EMERG. EGRESS	RECESSED	LITHONIA EVO VR 4118 6 AR FOL 120 ELR DDB	KENALL TDL6VL213L40K5BR9EL	BEGA 6650LEDEL	–	LED	29W	MVOLT	PROVIDE 90 MIN. BATTERY BACKUP.
D2	SHOWER DOWNLIGHT	RECESSED	GOTHOM EVO 41/14 6 DFR MVOLT	KENALL TDL6VL1213L40K5BR9	BEGA 6647LED	–	LED	18W	MVOLT	
D1	4" DOWNLIGHT	RECESSED	GOTHAM EVO 41/06 4 AR MD MVOLT	KENALL TDL6VL1206L40K5BR9	BEGA 6604LED	–	LED	14W	MVOLT	
E	EMERGENCY	UNIVERSAL	LITHONIA ELM2 LED	KENALL METELHC-24N-MW	SIGNTEX MLW-BB-10L2-W	–	LED	–	120V/277V	PROVIDE 90 MIN. BATTERY BACKUP.
S	48" EXTERIOR SCONCE	UNIVERSAL	BEGA LIGHTING 4312 LED	KENALL MLAS850-AS-BR-LED	SELUX M125-1L35-M1-W-004-SP DK BRONZE-120	–	LED	40W	MVOLT	
WP	WALL PACK	WALL	LITHONIA CSXW LED 30C 700 50K T2M MVOLT DDBXD	BEGA 3242LED	INTENSE IWP30035-BZ	–	LED	69W	MVOLT	
X	EXIT	UNIVERSAL	LITHONIA LQM S W 3 R	KENALL METDU-MW-R-EL	CONTECH EXONRKRED-P	–	LED	–	120V/277V	90 MIN. BATTERY BACKUP. NUMBER OF FACES AND ARROWS AS SHOWN.
XM	EXIT/ EMERG./ EGRESS	UNIVERSAL	LITHONIA LHQM S W 3 R HO W/ ELA AFNR REMOTE HEADS	KENALL METDU-MW-R-EC-EL	CONTECH EXR2HRLEML-P	–	EXIT) LED EMERGENCY HEADS 2) 6W XENON	–	MVOLT	90 MIN. BATTERY BACKUP. NUMBER OF FACES AND ARROWS AS SHOWN.
XM1	EXIT / EMERGENCY	UNIVERSAL	LITHONIA LHQM S W 3 R	KENALL METEC-24N-MW-R-65L	CONTECH EX2HRLEDEM-P	–	LED	–	120V/277V	90 MIN. BATTERY BACKUP. NUMBER OF FACES AND ARROWS AS SHOWN.
Z	4' STRIP	SURFACE	LITHONIA Z 2 32 MVOLT GEB10IS WGZ48	NULITE SA-232T8-UNV-IS-WG	PRUDENTIAL PSM102-2T8-WG	1) ELECTRONIC	2) F32T8/841	64W	MVOLT	PROVIDE WIRE GUARD

NOTES: WHERE NEW LIGHTING IS BEING INSTALLED IN THE SAME GENERAL LOCATION AS EXISTING LIGHTING, THE ELECTRICAL CONTRACTOR SHALL MATCH THE COLOR (KELVIN TEMPERATURE) OF THE NEW LAMPS TO THE EXISTING LAMPS.

LIGHTING FIXTURE SCHEDULE ALTERNATE BID NO.2

MARK	TYPE	MOUNTING	MANUFACTURER NO.1 CATALOG NO.	MANUFACTURER NO.2 CATALOG NO.	MANUFACTURER NO.3 CATALOG NO.	BALLAST QTY/TYPE	LAMPS QTY/TYPE	TOTAL WATTS	VOLTAGE	REMARKS
A	2' x 4' LED TROFFER	LAY-IN	CREE LIGHTING CR24 50L 40K S	LITHONIA 2FSL4-48L-EZ1-L840	FOCAL POINT FARL-24-SA-LL1-40K-UNV	–	LED	50W	MVOLT	

NOTES: ALTERNATE BID NO. 2 SHALL INCLUDE THE ALTERNATE FIXTURES INCLUDED IN THIS LIGHTING FIXTURE SCHEDULE PLUS ALL OTHER FIXTURES NOT LISTED HERE BUT THAT ARE INCLUDED IN THE BASE BID LIGHTING FIXTURE SCHEDULE.

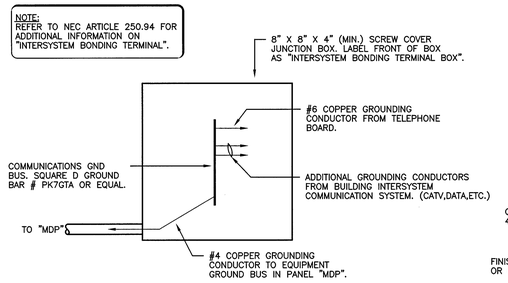

INTERSYSTEM BONDING TERMINAL BOX DETAIL

NTS

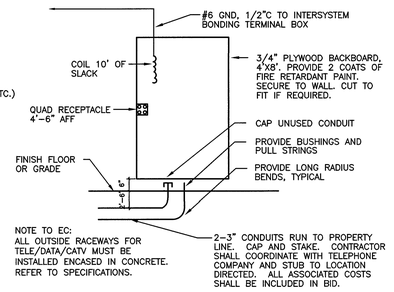

TELEPHONE SERVICE DETAIL

NTS

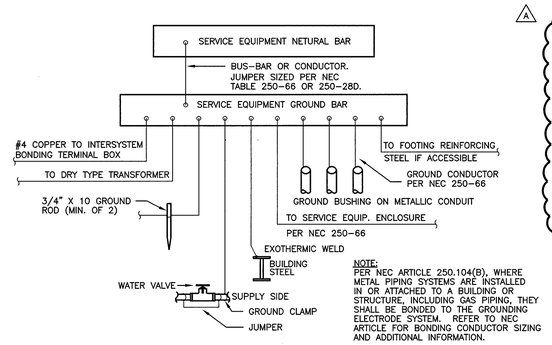

SERVICE EQUIPMENT GROUNDING DETAIL

NTS

ESTIMATED LOAD TABULATION FOR POWER CO.

LOADS IN KVA	EXISTING DEMAND		NEW CONNECTED		DIVERSITY FACTOR	NEW DEMAND		TOTAL KVA EXISTING & NEW DEMAND
	SINGLE PHASE	THREE PHASE	SINGLE PHASE	THREE PHASE		SINGLE PHASE	THREE PHASE	
LIGHTING	–	–	7.29	–	100%	7.29	–	7.29
RECEPTACLES	–	–	28.52	–	70%	19.96	–	19.96
HVAC	–	–	18.05	114.37	80%	14.44	91.50	105.94
MISCELLANEOUS	–	–	14.56	–	50%	7.28	–	7.28
TOTAL	–	–	68.42	–		48.97	91.50	140.47

WHERE THE "CONDITIONS" ARE AS FOLLOWS

1. EXPOSED LIVE PARTS ON ONE SIDE AND NO LIVE OR GROUNDED PARTS ON THE OTHER SIDE OF THE WORKING SPACE, OR EXPOSED LIVE PARTS ON BOTH SIDES EFFECTIVELY GUARDED BY SUITABLE WOOD OR INSULATING MATERIALS. INSULATED WIRE OR INSULATED BUSBARS OPERATING AT NOT OVER 300V SHALL NOT BE CONSIDERED LIVE PARTS.
2. EXPOSED LIVE PARTS ON ONE AND GROUNDED PARTS ON THE OTHER.
3. EXPOSED LIVE PARTS ON BOTH SIDES OF THE WORKSPACE (NOT GUARDED AS PROVIDED IN CONDITION 1) WITH THE OPERATOR BETWEEN.

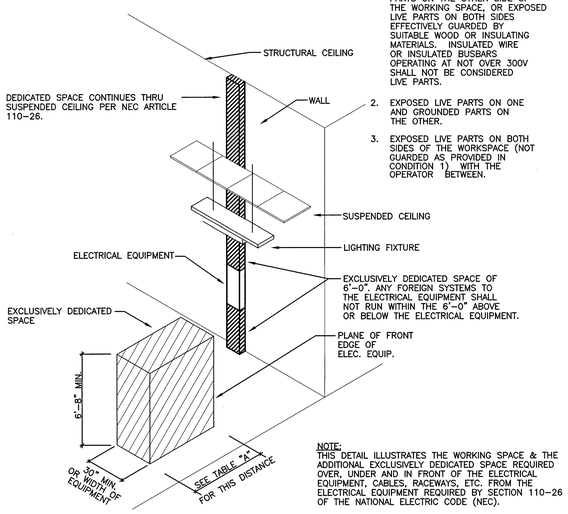

NOTE:
THIS DETAIL ILLUSTRATES THE WORKING SPACE & THE ADDITIONAL EXCLUSIVELY DEDICATED SPACE REQUIRED OVER, UNDER AND IN FRONT OF THE ELECTRICAL EQUIPMENT, CABLES, RACEWAYS, ETC. FROM THE ELECTRICAL EQUIPMENT REQUIRED BY SECTION 110-26 OF THE NATIONAL ELECTRIC CODE (NEC).

TABLE A – CLEARANCES

VOLTAGE TO GROUNDED NOMINAL	MINIMUM CLEAR DISTANCE (FEET)		
CONDITION:	1	2	3
0 – 150	3	3	3
151 – 600	3	3.5	4

CLEARANCE FOR ELEC. EQUIPMENT

NTS

POWER RISER NOTES:

1. SERVICE BY UTILITY. REFER TO SPECIFICATIONS FOR UNDERGROUND RACEWAYS/DUCTBANKS. REFER ALSO TO SITE PLAN. VERIFY UTILITY REQUIREMENTS. INCLUDE ALL COSTS ASSOC W/ SERVICE IN BID.
2. EC SHALL PROVIDE CT CAN AND METERING REQUIRED BY UTILITY.
3. (2) PARALLEL RUNS OF 4 #3/0, EACH IN 2"C.
4. 240/400/3/3R ENCLOSED CIRCUIT BREAKER, ULSE LABEL. IT MUST BE 3RD PARTY LISTED FOR SERVICE ENTRANCE.
5. #6, ¾"C TO GND RODS (MIN OF 2).
6. #1/0, ¾"C PER NEC 250 TO BLDG GND.
7. GENERATOR (NON-AUTOMATIC) 4-POLE MANUAL TRANSFER SWITCH (MTS) SHALL BE PROVIDED BY EC. 208V/400A/3ø.
8. (2) PARALLEL RUNS OF 4 #3/0, #3 GND, 2"C.
9. 160KA SURGE SUPPRESSION DEVICE. DESIGN BASED ON INNOVATIVE TECHNOLOGY PTX160-3Y101 W/ A MINIMUM WIRING DISTANCE AND NUMBER OF BENDS. INCLUDE A MINIMUM OF 3 TWISTS IN WIRING.
10. INTERSYSTEM BONDING TERMINAL BOX. (REFER TO DETAIL). #4, ¾"C FOR CONNECTION.
11. 240/300/3/3R ENCLOSED CIRCUIT BREAKER, ULSE LABEL. IT MUST BE 3RD PARTY LISTED FOR SERVICE ENTRANCE. BREAKER LUGS SHALL ACCOMMODATE #350 KCMIL FOR CONNECTION TO PORTABLE GENERATOR BY OTHERS.
12. 4 #350 KCMIL, #4 GND, 3"C.

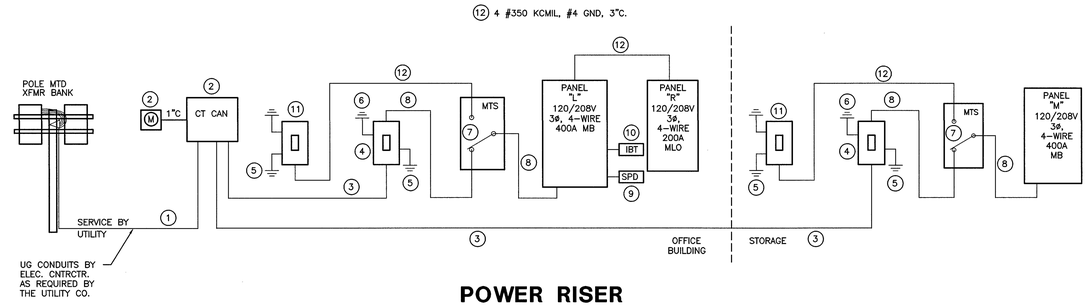

POWER RISER

NTS

012115DR151500

adwarchitects
environmentsforlife
architecture planning interiors
101 WEST WORTHINGTON AVENUE
CHARLOTTE, NORTH CAROLINA 28203
P704.379.1919
F704.379.1920
www.adwarchitects.com

BRITTAIN ENGINEERING, INC.
CONSULTING MECHANICAL AND ELECTRICAL ENGINEERS
PO BOX 999 HICKORY, NC 28603
TEL. (828) 326-1613 FAX. (828) 326-1614

NCDOT Division 7: Roadside Environmental & Bituminous Unit Support Facility

Alamance County
Graham, NC

Construction Documents
Submittal SCO
#13-10060-01A

FLOOR PLAN ELECTRICAL

DATE March 10, 2015

PROJECT NO 13070

REVISIONS

NO	DATE	DESCRIPTION:
A	05.08.15	SCO Review Comments

THIS DRAWING IS THE PROPERTY OF ADW ARCHITECTS, PA. AND SHALL NOT BE REPRODUCED OR COPIED IN WHOLE OR IN PART. IT SHALL NOT BE USED ON ANY OTHER PROJECT OR GIVEN TO ANY OTHER COMPANY OR AGENCY WITHOUT THE CONSENT OF ADW ARCHITECTS, PA.

NORTH CAROLINA PROFESSIONAL SEAL 7883 ENGINEER DONALD R. BRITTAIN 05/09/15

SHEET NUMBER E1

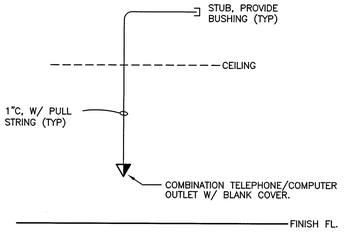

TYPICAL COMBINATION TELEPHONE / COMPUTER OUTLET

NTS

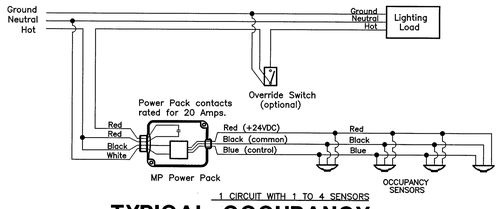

TYPICAL OCCUPANCY SENSOR WIRING DIAGRAMS

NTS

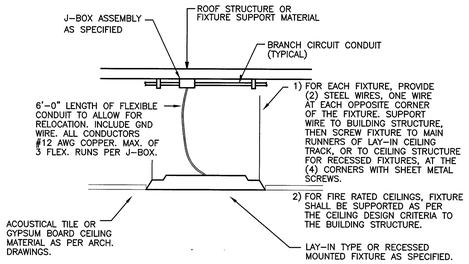

TYPICAL LIGHTING FIXTURE MOUNTING DETAIL

NTS

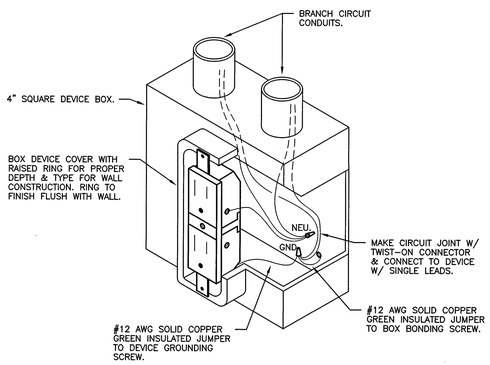

RECEPTACLE GROUNDING DETAIL

NTS

OCCUPANCY SENSOR LEGEND

SYMBOL	DESCRIPTION
S	REFER TO SPECIFICATION 26 09 25 WALL SWITCH SENSOR – PASSIVE INFRARED (PIR)
CP	REFER TO SPECIFICATION 26 09 25 CEILING MOUNTED SENSOR, STANDARD RANGE 360°, LOW VOLTAGE, DUAL TECHNOLOGY (PDT)
C10	REFER TO SPECIFICATION 26 09 25 CEILING MOUNTED SENSOR, EXTENDED RANGE 360°, LOW VOLTAGE, PASSIVE INFRARED (PIR)
P	REFER TO SPECIFICATION 26 09 25: 20A RATED, 120V/277, POWER PACK

GENERAL NOTES:

- CEILING MOUNTED SENSORS SHALL BE INSTALLED A MINIMUM OF 6'-0" FROM ALL HVAC SUPPLY, RETURN & EXHAUST GRILLES.
- FINAL PLACEMENT OF POWER PACKS SHALL BE BY THE EC.
- CEILING MOUNTED EXTENDED RANGE 360° SENSORS: FOR MAXIMUM DISTANCE ROTATE SENSOR CLOCKWISE SO THAT THE SCREW AXIS IS POSITIONED APPROX 7.5° OFF THE ENTRANCE AXIS.
- CONTRACTOR SHALL INSTALL ALL DEVICES AS PER THE MANUFACTURER'S RECOMMENDATIONS.
- IF AN ALTERNATE DEVICE MANUFACTURER IS USED, THE CONTRACTOR SHALL BE RESPONSIBLE FOR OBTAINING A LAYOUT FROM THE MANUFACTURER AND SUBMITTING IT TO THE ENGINEER FOR APPROVAL. IF ADDITIONAL DEVICES ARE REQUIRED IT SHALL BE AT THE EXPENSE OF THE CONTRACTOR. AUTOCAD DRAWINGS MAY BE OBTAINED FROM THE ENGINEER.

NOTES:

1. 240/30/3, FUSE FOR EQUIP.
2. 3 #10, #10 GND, 1"C.
3. EC SHALL PROVIDE 120V CIRCUITRY FOR CIRCULATING PUMP. CONNECT AS REQUIRED. COORDINATE INSTALLATION W/ PC.
4. RECEPTACLE FOR UNDERCOUNTER REFRIGERATOR. VERIFY EXACT LOCATION AND REQUIREMENTS.
5. 240/400/3/3R, 3RD PARTY SE RATED DISCONNECT FOR OFFICE SECTION OF BUILDING.
6. 240/400/3/3R, 3RD PARTY SE RATED DISCONNECT FOR STORAGE SECTION OF BUILDING.
7. 240/400/3/3R, 3RD PARTY RATED DISCONNECT FOR OFFICE GENERATOR CONNECT.
8. 240/400/3/3R, 3RD PARTY RATED DISCONNECT FOR OFFICE GENERATOR CONNECT.
9. "OFFICE" TRANSFER SWITCH. REFER TO POWER RISER AND SPECIFICATIONS.
10. "STORAGE" TRANSFER SWITCH. REFER TO POWER RISER AND SPECIFICATIONS.
11. COORD INSTALLATION W/ PC.
12. PROVIDE WHILE-IN-USE COVER FOR GFI/WP RECEPTACLE.
13. 240/30/1, FUSE FOR EQUIP.
14. EC SHALL PROVIDE CONDUIT FOR CONTROL WIRING. COORD INSTALLATION W/ OH DOOR INSTALLER.
15. CONNECTION FOR HAND DRYER. EC SHALL CONNECT COMPLETE. VERIFY REQUIREMENTS PRIOR TO ROUGH-IN.
16. EC SHALL PROVIDE (2) CIRCUITS FOR HEAT TAPE TO BE INSTALLED IN THE PRV BOX. ROUTE CIRCUITRY FROM BUILDING WITH WATERLINE TO BOX APPROXIMATELY 250'. VERIFY EXACT REQUIREMENTS AND LOCATION. PROVIDE CIRCUITRY, BOXES, AND DEVICES AS REQUIRED. COORDINATE INSTALLATION W/ PC.

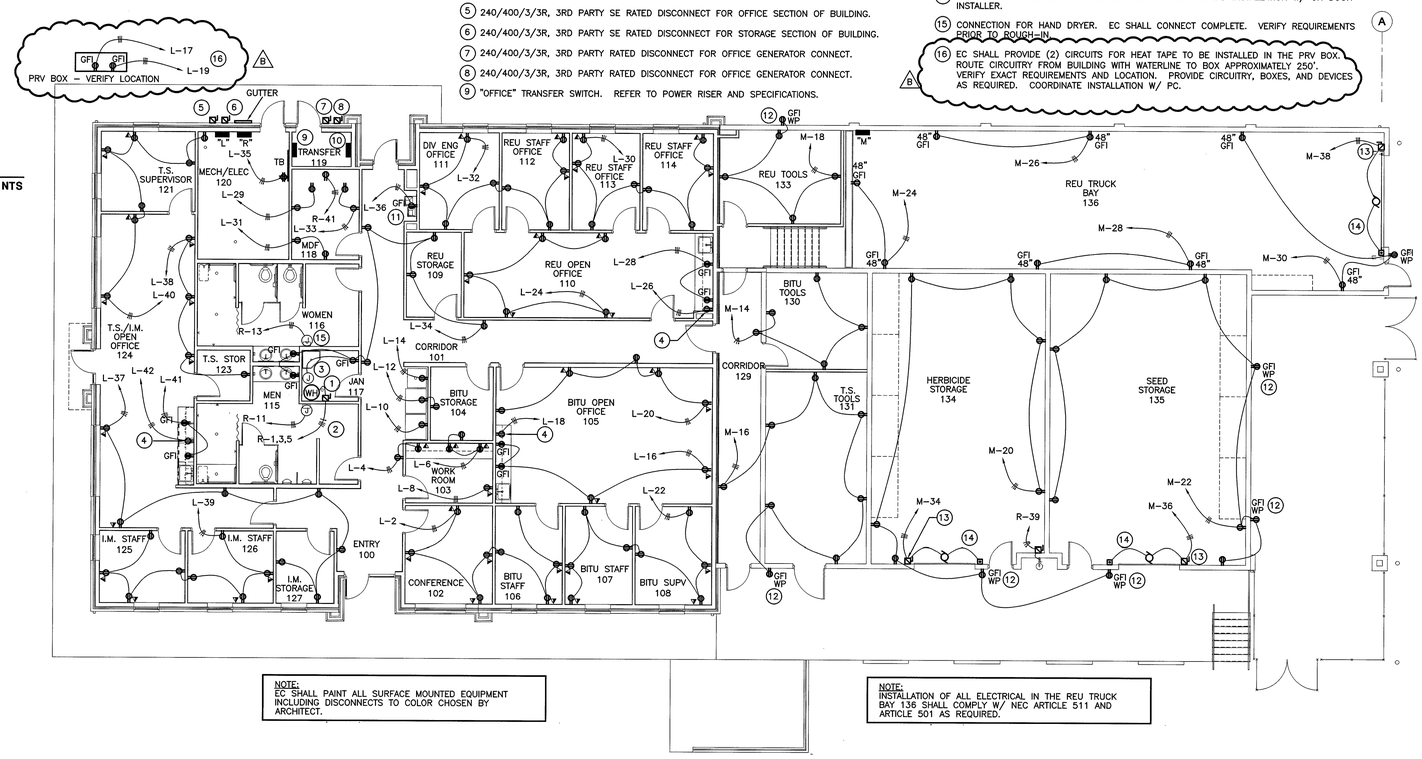

NOTE:
EC SHALL PAINT ALL SURFACE MOUNTED EQUIPMENT INCLUDING DISCONNECTS TO COLOR CHOSEN BY ARCHITECT.

NOTE:
INSTALLATION OF ALL ELECTRICAL IN THE REU TRUCK BAY 136 SHALL COMPLY W/ NEC ARTICLE 511 AND ARTICLE 501 AS REQUIRED.

FLOOR PLAN - POWER

SCALE: 1/8" = 1'-0"

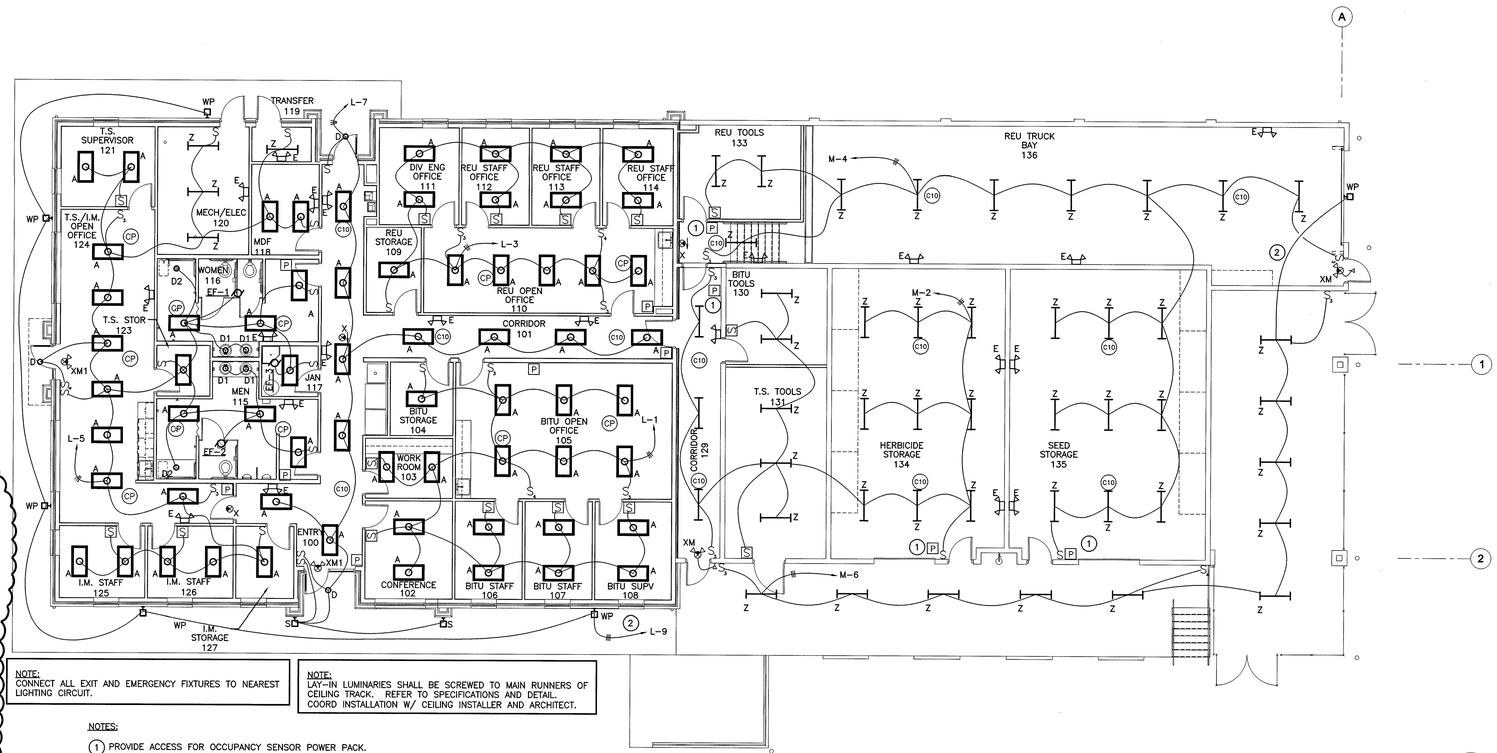

NOTE:
CONNECT ALL EXIT AND EMERGENCY FIXTURES TO NEAREST LIGHTING CIRCUIT.

NOTE:
LAY-IN LUMINARIES SHALL BE SCREWED TO MAIN RUNNERS OF CEILING TRACK. REFER TO SPECIFICATIONS AND DETAIL. COORD INSTALLATION W/ CEILING INSTALLER AND ARCHITECT.

NOTES:

1. PROVIDE ACCESS FOR OCCUPANCY SENSOR POWER PACK.
2. VIA LINE VOLTAGE PHOTOCELL. PLACE PHOTOCELL ON NORTH SIDE OF BLDG. VERIFY MOUNTING HEIGHT W/ ARCHITECT.

FLOOR PLAN - LIGHTING

SCALE: 1/8" = 1'-0"

GRAPHIC SCALE

NORTH

012215DR151500

adwarchitects
environmentsforlife
architecture planning interiors
101 WEST WORTHINGTON AVENUE
CHARLOTTE, NORTH CAROLINA 28203
P704.379.1919
F704.379.1920
www.adwarchitects.com

BEI
BRITTAIN ENGINEERING, INC.
CONSULTING MECHANICAL AND ELECTRICAL ENGINEERS
PO BOX 999 HICKORY, NC 28603
TEL: (828) 326-1813 FAX: (828) 326-1814

NCDOT Division 7: Roadside Environmental & Bituminous Unit Support Facility

Alamance County
Graham, NC

Construction Documents
Submittal SCO
#13-10060-01A

FLOOR PLAN ELECTRICAL

DATE March 10, 2015
PROJECT NO 13070

REVISIONS

NO	DATE	DESCRIPTION:
1	05.08.15	SCO Review Comments
2	05.29.15	City of Graham Revisions

THIS DRAWING IS THE PROPERTY OF ADW ARCHITECTS, PA, AND SHALL NOT BE REPRODUCED OR COPIED IN WHOLE OR IN PART. IT SHALL NOT BE USED ON ANY OTHER PROJECT OR GIVEN TO ANY OTHER COMPANY OR AGENCY WITHOUT THE CONSENT OF ADW ARCHITECTS, PA.

NORTH CAROLINA PROFESSIONAL SEAL 7883 ENGINEER DONALD R. BRITTAIN 06/09/15

SHEET NUMBER E2

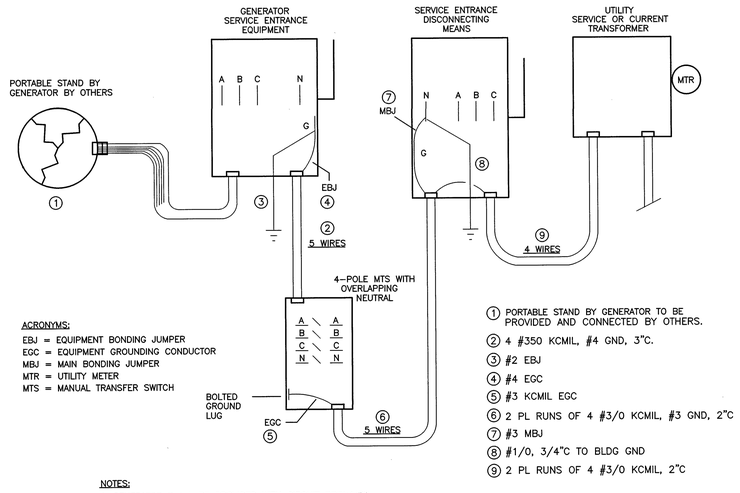

ACRONYMS:

EBJ = EQUIPMENT BONDING JUMPER
EGC = EQUIPMENT GROUNDING CONDUCTOR
MBJ = MAIN BONDING JUMPER
MTR = UTILITY METER
MTS = MANUAL TRANSFER SWITCH

1. PORTABLE STAND BY GENERATOR TO BE PROVIDED AND CONNECTED BY OTHERS.
2. 4 #350 KCMIL, #4 GND, 3"C.
3. #2 EBJ
4. #4 EGC
5. #3 KCMIL EGC
6. 2 PL RUNS OF 4 #3/0 KCMIL, #3 GND, 2"C
7. #3 MBJ
8. #1/0, 3/4"C TO BLDG GND
9. 2 PL RUNS OF 4 #3/0 KCMIL, 2"C

NOTES:

1. GENERATOR SHALL BE PROVIDED WITH CIRCUIT BREAKERS.
2. EQUIPMENT BONDING JUMPER (EBJ) PER NEC ARTICLE 250.102C FOR GREATER THAN 1100 KCMIL TOTAL CONDUCTOR AREA OR TABLE 250.66 FOR LESS THAN 1100 KCMIL.
3. ⏚ SYMBOL DENOTES GROUNDING ELECTRODE TO THE BUILDING STEEL WHERE PROVEN TO BE SUITABLY GROUNDED, THE METALLIC WATER MAIN & GROUND RODS.
4. BATTERY CHARGER & BLOCK HEATER SHALL BE FED FROM PANEL "B".
5. EQUIPMENT SHALL BE GROUNDED PER NEC ARTICLE 250.32(B) AND TABLE 250.122.

GENERATOR GROUNDING DETAIL

208/120V/3 PH NTS

ELECTRICAL NOTES

1. EQUIPMENT OF TRADES OTHER THAN ELECTRICAL
2. CONDUIT & WIRING BY HVAC, PLUMBING CONTRACTOR OR OTHER TRADES
3. IF AN ADDITIONAL DISCONNECT IS REQUIRED BY NEC, IT SHALL BE PROVIDED AND INSTALLED BY THE EQUIPMENT CONTRACTOR.
4. A COMBINATION STARTER OR VFD MAY BE USED IN LIEU OF A SEPARATE DISCONNECT SWITCH AND STARTER. LOCATE ADJACENT TO EQUIPMENT.
5. FEEDER CIRCUIT WIRING AND CONDUIT IN ELECTRICAL WORK. SEE PANELBOARD SHCEDULES FOR WIRE AND BREAKER SIZES.
6. JUNCTION BOX MAY BE SHOWN ON ELECTRICAL PLANS FOR SOME EQUIPMENT. IF NO STARTER OR DISCONNECT IS SUPPLIED, A JUNCTION BOX SHALL BE INSTALLED ADJACENT TO EQUIPMENT. THE ELECTRICAL CONTRACTOR SHALL PROVIDE LINE SIDE WIRING TO THE JUNCTION BOX. LOAD SIDE WIRING WILL BE PROVIDED BY THE MECHANICAL CONTRACTOR OR OTHER TRADES.
7. PROJECTS UTILIZING AN MCC, THE STARTER, CB, OR VFD IN THE MCC ARE PROVIDED BY THE ELECTRICAL CONTRACTOR.
8. IN ALL CASES, THE EQUIPMENT CONTRACTOR SHALL MAKE FINAL CONNECTIONS, START UP AND TEST EQUIPMENT.
9. IF THE ROOF TOP EQUIPMENT IS NOT PROVIDED WITH A BUILT-IN SWITCH, THE ELECTRICAL CONTRACTOR SHALL PROVIDE A DISCONNECT SWITCH.
10. WHERE ELECTRICAL WIRING IS REQUIRED BY TRADES OTHER THAN COVERED BY DIVISION 16, THE INSTALLER SHALL REFER TO THE WIRING MATERIALS AND METHODS AS SPECIFIED UNDER DIVISION 16, NO EXCEPTIONS.

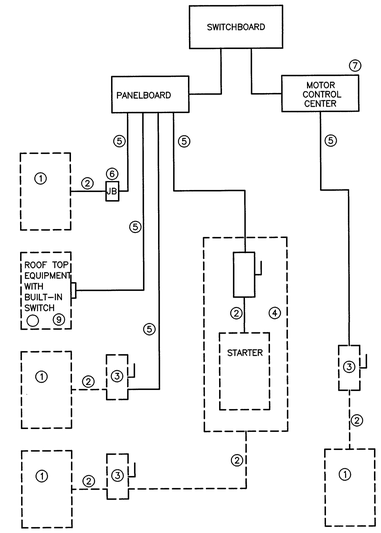

TYPICAL EQUIPMENT CONNECTION

NTS

NOTES:

1. 240/30/1/3R, FUSE FOR EQUIP.
2. 2 #10, #10 GND, ¾"C.
3. 240V, 15A, 1ø MOTOR RATED SWITCH.
4. 240/30/1, FUSE FOR EQUIP.
5. 240/60/3, FUSE FOR EQUIP.
6. 3 #8, #10 GND, ¾"C.
7. 240/100/3, FUSE FOR EQUIP.
8. 3 #2, #8 GND, 1¼"C.
9. EC SHALL PROVIDE POWER AND INTERLOCK CIRCUITRY BETWEEN FAN AND LOUVER COMPLETE. ALL CIRCUITRY SHALL BE INSTALLED IN CONDUIT.
10. EC SHALL PROVIDE INTERCONNECT CIRCUITRY BETWEEN FAN AND CO SENSOR COMPLETE. COORDINATE INSTALLATION W/ MC. ALL CIRCUITRY SHALL BE IN CONDUIT.

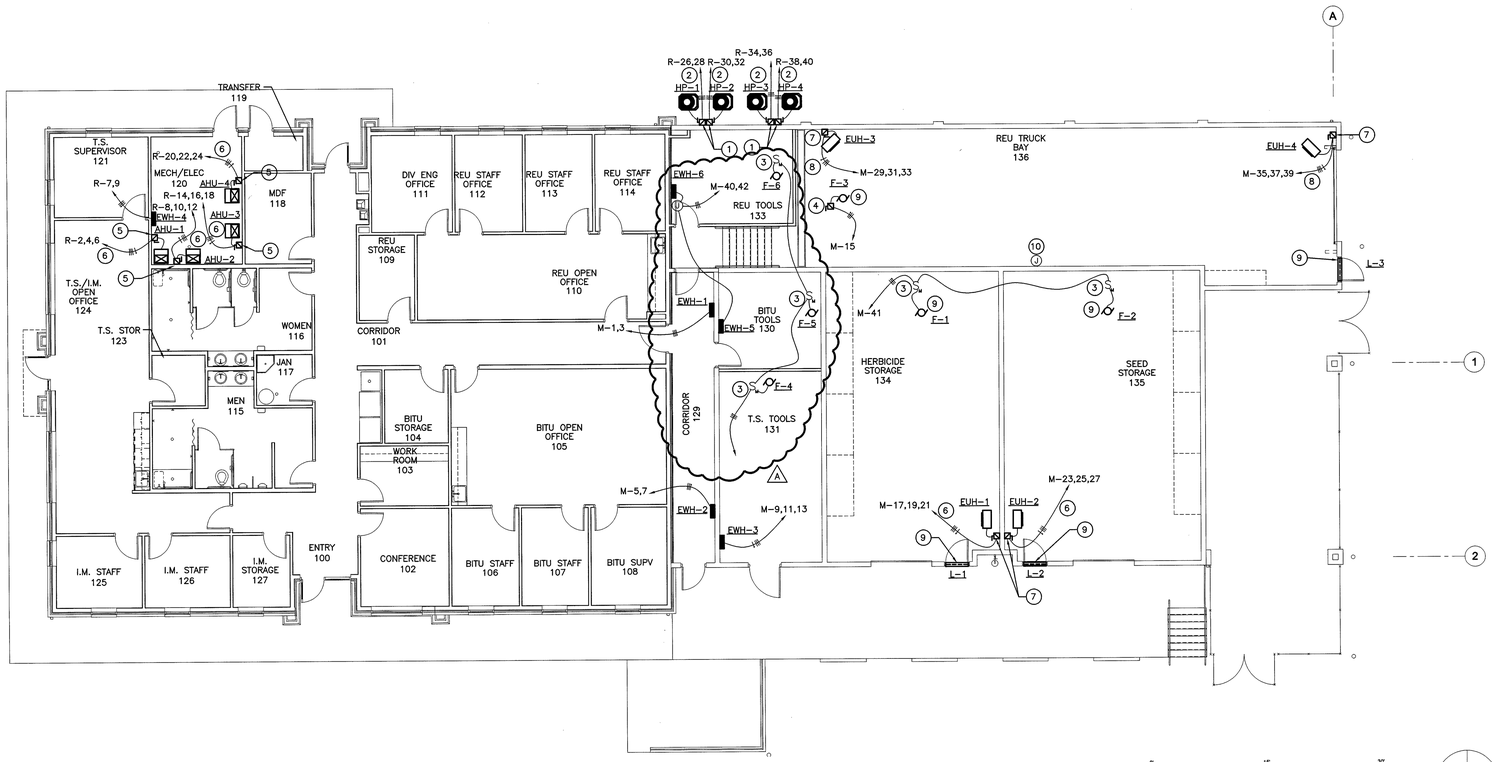

FLOOR PLAN - HVAC POWER

SCALE: 1/8" = 1'-0"

GRAPHIC SCALE

NORTH

0122150R151500

adwarchitects
environmentsforlife
architecture planning interiors
101 WEST WORTHINGTON AVENUE
CHARLOTTE, NORTH CAROLINA 28203
P704.379.1919
F704.379.1920
www.adwarchitects.com

BRITTAIN ENGINEERING, INC.
CONSULTING MECHANICAL AND ELECTRICAL ENGINEERS
PO BOX 939 HICKORY, NC 28603
TEL. (828) 328-1813 FAX. (828) 328-1814

NCDOT Division 7: Roadside Environmental & Bituminous Unit Support Facility

Alamance County
Graham, NC

Construction Documents
Submittal SCO
#13-10060-01A

FLOOR PLAN
FIRE ALARM & HVAC POWER

DATE March 10, 2015
PROJECT NO 13070

REVISIONS

NO	DATE	DESCRIPTION:
A	05.08.15	SCO Review Comments

THIS DRAWING IS THE PROPERTY OF ADW ARCHITECTS, PA. AND SHALL NOT BE REPRODUCED OR COPIED IN WHOLE OR IN PART. IT SHALL NOT BE USED ON ANY OTHER PROJECT OR GIVEN TO ANY OTHER COMPANY OR AGENCY WITHOUT THE CONSENT OF ADW ARCHITECTS, PA.

NORTH CAROLINA REGISTERED ARCHITECT SEAL 7883 DONALD R BRITTAIN 05/07/15

SHEET NUMBER E3

LOAD KVA OR KW A	B	C	DESIGNATION TYPED ON DIRECTORY	COND (")	GND	WIRE SIZE	BRKR RAT'G	CKT NO.
1.00				1/2	12	12		1
	1.00		EWH-1				20	3
		1.00						5
1.00			EWH-2				20	7
	1.33							9
		1.33	EWH-3				20	11
1.33								13
	1.66		FAN 3				20	15
		3.33		3/4	10	8		17
3.33			EUH-1				40	19
	3.33							21
		3.33						23
3.33			EUH-2				40	25
	3.33							27
		8.33		1 1/4	8	2		29
8.33			EUH-3				90	31
	8.33							33
		8.33						35
8.33			EUH-4				90	37
	8.33							39
		1.57	FAN 1, FAN 2	1/2	12	12	20	41

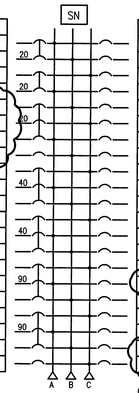

CKT NO.	BRKR RAT'G	WIRE SIZE	GND	COND (")	DESIGNATION TYPED ON DIRECTORY	LOAD KVA OR KW A	B	C
2	20	12	12	1/2	LIGHTING - 129, 132, 134	1.10		
4					- 133, 135, 136		1.22	
6					- DOCK			0.71
8					SPARE			
10								
12		12	12	1/2	FANS 4,5,6			1.50
14					RECEPTACLES - 192, 130	0.90		
16					- 131		1.44	
18					- 133			0.90
20					- 134	1.44		
22					- 135		1.44	
24					- 136			0.36
26					- 136	0.36		
28					- 136		0.36	
30					- 136			0.36
32					- SPARE			
34	25	10	10	1/2	- OH DOOR 134		1.84	
36					- OH DOOR 135			1.84
38					- OH DOOR 136	1.84		
40	20	12	12		EWH - 5,6		2.00	
42	20	12	12					2.00

CONNECTED LOAD (KVA)	GROSS	USE	NET
RECEPTACLES	7.56	100%	7.56
LIGHTING	3.03	85%	2.58
HVAC	81.18	100%	81.18
MISC.	5.32	50%	2.66
TOTAL	97.09		93.98

GROSS PHASE TOTALS (KVA) A = 32.09 B = 33.61 C = 31.39

SQUARE D TYPE NQOD, MOUNTED SURFACE
SUPPLY: 120/208 VOLT, 3-PHASE, 4 WIRE
BUSSES / NEUTRAL: 400A/400A
MAINS: 400A MAIN BREAKER
FEEDER: SEE POWER RISER DIAGRAM
PROVIDE COPPER GROUND BUS
MIN AIC RATING: 22,000
PANEL NOTES:

PANEL M

LOAD KVA OR KW A	B	C	DESIGNATION TYPED ON DIRECTORY	COND (")	GND	WIRE SIZE	BRKR RAT'G	CKT NO.
0.95			LIGHTING - 102-108	1/2	12	12	20	1
	0.78		- 109-114					3
		1.58	- 115-127					5
0.60			- 100-101					7
	0.35		- WALL PACKS					9
		17.22		2	6	3/0		11
20.10			PANEL "R"				200	13
	21.60							15
		0.09	PRV BOX HEAT TAPE	1/2	12	12	20	17
0.09			PRV BOX HEAT TAPE	1/2	12	12		19
			SPARE					21
								23
								25
								27
		0.36	RECEPTACLES - 118	1/2	12	12	20	29
0.36			- 118					31
	0.36		- 118					33
		0.36	- TB					35
1.26			- 124, 127					37
	1.44		- 125, 126					39
		0.36	- 124					41

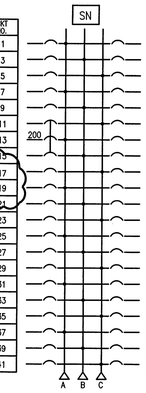

CKT NO.	BRKR RAT'G	WIRE SIZE	GND	COND (")	DESIGNATION TYPED ON DIRECTORY	LOAD KVA OR KW A	B	C
2	20	12	12	1/2	RECEPTACLES - 102, 106	1.44		
4					- 103		0.36	
6					- 103			0.54
8					- 103 COPY	0.18		
10					- VEND		0.50	
12					- VEND			0.50
14					- VEND	0.50		
16					- 105		0.54	
18					- 105 COPY			0.50
20					- 105	0.90		
22					- 107, 108		1.44	
24					- 110			0.90
26					- 110 COPY	0.50		
28					- 110		0.36	
30					- 113, 114			1.44
32					- 111, 112	1.44		
34					- 115, 117, 100, 101, 109		1.44	
36					- W/C			0.50
38					- 123, 124	0.72		
40					- 121, 124		1.26	
42					- 124 REF			0.50

CONNECTED LOAD (KVA)	GROSS	USE	NET
RECEPTACLES	20.96	70%	14.67
LIGHTING	4.26	85%	3.62
PANEL "R"	58.62	80%	47.00
TOTAL	84.20		65.29

GROSS PHASE TOTALS (KVA) A = 28.95 B = 30.13 C = 24.76

SQUARE D TYPE NQOD, MOUNTED SURFACE
SUPPLY: 120/208 VOLT, 3-PHASE, 4 WIRE
BUSSES / NEUTRAL: 400A/400A
MAINS: 400A MAIN BREAKER
FEEDER: SEE POWER RISER DIAGRAM
PROVIDE COPPER GROUND BUS
MIN AIC RATING: 22,000
PANEL NOTES:

PANEL L

LOAD KVA OR KW A	B	C	DESIGNATION TYPED ON DIRECTORY	COND (")	GND	WIRE SIZE	BRKR RAT'G	CKT NO.
2.00				1/2	10	10		1
	2.00		WATER HEATER				30	3
		2.00						5
1.50			EWH-4	1/2	12	12		7
	1.50						20	9
		1.50	HAND DRYER					11
1.50			HAND DRYER					13
			SPARE					15
								17
								19
								21
								23
								25
			SPACE					27
								29
								31
								33
								35
								37
	1.20		EYEWASH	1/2	12	12	20	39
		0.18	RECEPTACLES - 119					41

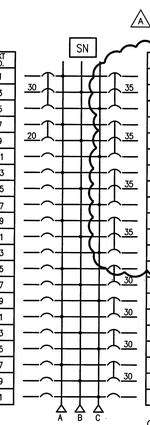

CKT NO.	BRKR RAT'G	WIRE SIZE	GND	COND (")	DESIGNATION TYPED ON DIRECTORY	LOAD KVA OR KW A	B	C
2		8	10	3/4		2.98		
4	35				AHU-1		2.98	
6								2.98
8						2.98		
10	35				AHU-2		2.98	
12								2.98
14						2.98		
16	35				AHU-3		2.98	
18								2.98
20						2.98		
22	35				AHU-4		2.98	
24								2.98
26		10		1/2		1.56		
28	30				HP-1		1.56	
30								1.56
32	30				HP-2	1.56		
34							1.56	
36	30				HP-3			1.56
38						1.56		
40	30				HP-4		1.56	
42					SPARE			

CONNECTED LOAD (KVA)	GROSS	USE	NET
RECEPTACLES	0.18	70%	0.13
HVAC	51.24	80%	41.00
MISC.	10.20	80%	8.16
TOTAL	61.62		49.29

GROSS PHASE TOTALS (KVA) A = 21.60 B = 21.30 C = 18.72

SQUARE D TYPE NQOD, MOUNTED SURFACE
SUPPLY: 120/208 VOLT, 3-PHASE, 4 WIRE
BUSSES / NEUTRAL: 200A/200A
MAINS: 300A, MAIN LUGS ONLY
FEEDER: SEE POWER RISER DIAGRAM
PROVIDE COPPER GROUND BUS
MIN AIC RATING: 22,000
PANEL NOTES:

PANEL R

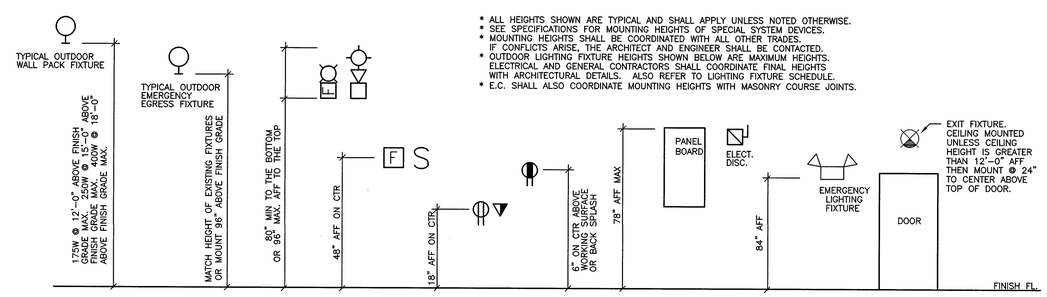

* ALL HEIGHTS SHOWN ARE TYPICAL AND SHALL APPLY UNLESS NOTED OTHERWISE.
* SEE SPECIFICATIONS FOR MOUNTING HEIGHTS OF SPECIAL SYSTEM DEVICES.
* MOUNTING HEIGHTS SHALL BE COORDINATED WITH ALL OTHER TRADES. IF CONFLICTS ARISE, THE ARCHITECT AND ENGINEER SHALL BE CONTACTED.
* OUTDOOR LIGHTING FIXTURE HEIGHTS SHOWN BELOW ARE MAXIMUM HEIGHTS. ELECTRICAL AND GENERAL CONTRACTORS SHALL COORDINATE FINAL HEIGHTS WITH ARCHITECTURAL DETAILS. ALSO REFER TO LIGHTING FIXTURE SCHEDULE.
* E.C. SHALL ALSO COORDINATE MOUNTING HEIGHTS WITH MASONRY COURSE JOINTS.

MOUNTING HEIGHT DETAILS

NTS

1000614DR151500

adwarchitects
environmentsforlife
architecture planning interiors
101 WEST WORTHINGTON AVENUE
CHARLOTTE, NORTH CAROLINA 28203
P704.379.1919
F704.379.1920
www.adwarchitects.com

BRITTAIN ENGINEERING, INC.
CONSULTING MECHANICAL AND ELECTRICAL ENGINEERS
PO BOX 998 HICKORY, NC 28603
TEL. (828) 326-1813 FAX. (828) 326-1814

NCDOT Division 7: Roadside Environmental & Bituminous Unit Support Facility

Alamance County
Graham, NC

Construction Documents
Submittal SCO
#13-10060-01A

SCHEDULES

DATE March 10, 2015
PROJECT NO 13070

REVISIONS

NO	DATE	DESCRIPTION:
1	05.08.15	SCO Review Comments
2	05.29.15	City of Graham Revisions

THIS DRAWING IS THE PROPERTY OF ADW ARCHITECTS, PA. AND SHALL NOT BE REPRODUCED OR COPIED IN WHOLE OR IN PART. IT SHALL NOT BE USED ON ANY OTHER PROJECT OR GIVEN TO ANY OTHER COMPANY OR AGENCY WITHOUT THE CONSENT OF ADW ARCHITECTS, PA.

NORTH CAROLINA REGISTERED LICENSE SEAL 7883 ARCHITECT
05/29/15

SHEET NUMBER E4