DocuSign Envelope ID: 2F1CB6A3-77F1-459E-AD87-A7F4E4A6A63B

PROJECT: 17BP.7.R.33

See Sheet 1-A For Index of Sheets
See Sheet 1-B For Conventional Symbols

STATE	STATE PROJECT REFERENCE NO.	SHEET NO.	TOTAL SHEETS
N.C.	17BP.7.R.33	1	

STATE PROJ. NO.	F.A. PROJ. NO.	DESCRIPTION

STATE OF NORTH CAROLINA
DIVISION OF HIGHWAYS

GUILFORD COUNTY

LOCATION: BRIDGE NO. 338 OVER WEST FORK OF DEEP RIVER (TRIBUTARY 1) ON SR 1859 (BOYLSTON ROAD)

TYPE OF WORK: GRADING, PAVING, DRAINAGE, AND STRUCTURE

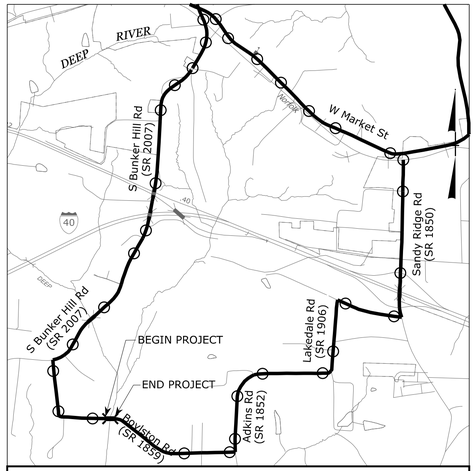

VICINITY MAP

OFF SITE DETOUR ROUTE

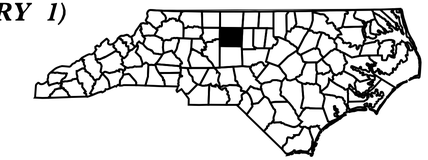

NC GRID
NAD 83/NSRS 2007

4

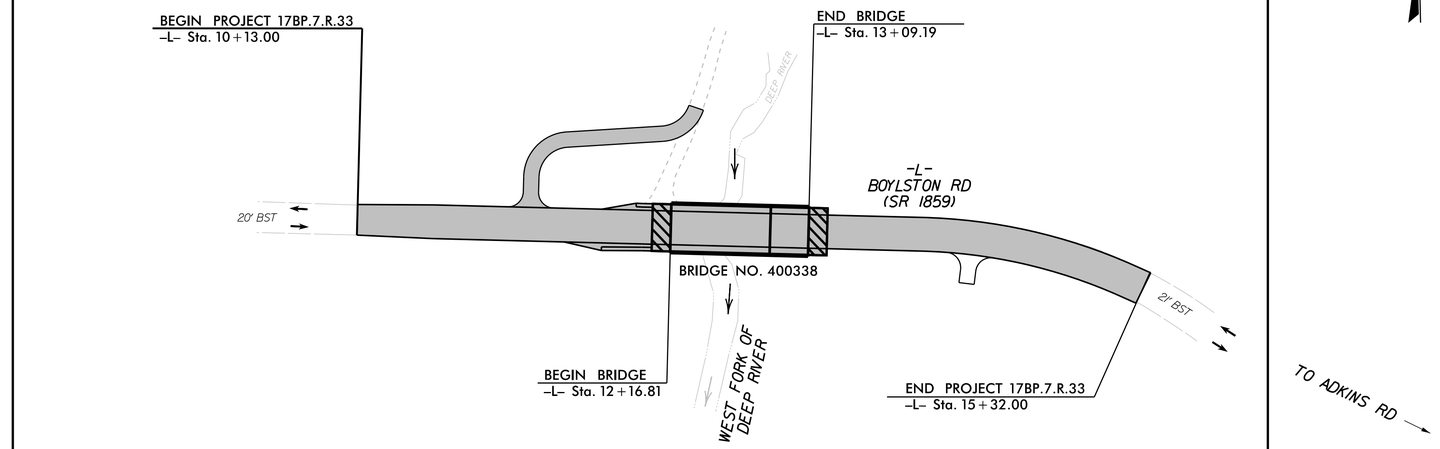

* DESIGN EXCEPTION
VERTICAL CURVE K
VERTICAL SSD

NCDOT CONTACT:

TIM POWERS, P.E.
DIVISION BRIDGE PROGRAM MANAGER
DIVISION 7

CLEARING ON THIS PROJECT SHALL BE PERFORMED TO THE LIMITS ESTABLISHED BY METHOD II
THIS PROJECT IS NOT WITHIN ANY MUNICIPAL BOUNDARIES.

CONTRACT:

GRAPHIC SCALES

50 25 0 50 100
PLANS

50 25 0 50 100
PROFILE (HORIZONTAL)

10 5 0 10 20
PROFILE (VERTICAL)

DESIGN DATA

ADT 2013 = 1340 VPD
ADT 2033 = 2450 VPD
DHV =
D =
T = 6%
V = 60 MPH

FUNC CLASS = LOCAL RURAL

SUB-REGIONAL TIER

PROJECT LENGTH

LENGTH ROADWAY PROJECT	=	0.081 MILES
LENGTH STRUCTURE PROJECT	=	0.017 MILES
TOTAL LENGTH OF PROJECT	=	0.098 MILES

PLANS PREPARED FOR THE NCDOT BY: Kimley-Horn and Associates, Inc.
© 2013 Post Office Box 33068 Raleigh, North Carolina 27636 PE NO. F-0102

2012 STANDARD SPECIFICATIONS

RIGHT OF WAY DATE:

LETTING DATE:

JEFFREY W. MOORE, P.E.
PROJECT ENGINEER

ELIZABETH LYNCH, P.E.
PROJECT DESIGN ENGINEER

HYDRAULICS ENGINEER
NORTH CAROLINA PROFESSIONAL SEAL 026480 ENGINEER LARRY D. ROBINSON, JR.
DocuSigned by: CE178297105643E...
6/22/2015
SIGNATURE: P.E.

ROADWAY DESIGN ENGINEER
NORTH CAROLINA PROFESSIONAL SEAL 022458 ENGINEER JEFFREY W. MOORE
DocuSigned by: Jeff Moore 2D0C49E...
6/22/2015
SIGNATURE: P.E.

STATE OF NORTH CAROLINA • DEPARTMENT OF TRANSPORTATION

K:\RAL_Roadway\01\036\93 - 400338\Roadway\Proj\400338_rdy_1shdgn
6/19/2015

DocuSign Envelope ID: 6F16CB68-8755-4C03-B561-56C7684F2972

Kimley-Horn
and Associates, Inc.

P.O. BOX 33068
RALEIGH, N.C. 27636–3068

PROJECT REFERENCE NO.	SHEET NO.
17BP.7.R.33	1–A

ROADWAY DESIGN ENGINEER

NORTH CAROLINA PROFESSIONAL ENGINEER SEAL 024436 JEFFREY W. MOORE 6/19/2015

REVISIONS

INDEX OF SHEETS

SHEET NUMBER	DESCRIPTION
1	TITLE SHEET
1–A	INDEX OF SHEETS, GENERAL NOTES, AND LIST OF STANDARD DRAWINGS
1–B	CONVENTIONAL SYMBOLS
2	PAVEMENT SCHEDULE AND TYPICAL SECTIONS
3	GUARDRAIL SUMMARY, DRAINAGE SUMMARY, AND SUMMARY OF EARTHWORK
4	PLAN AND PROFILE SHEET
TMP–1 THRU TMP–2	TRAFFIC CONTROL PLANS
EC–1 THRU EC–5	EROSION CONTROL PLANS
RF–1	REFORESTATION PLAN
UO–1 THRU UO–2	UTILITY BY OTHERS PLANS
X–1 THRU X–5	CROSS–SECTIONS
S–1 THRU S–18	STRUCTURE PLANS

GENERAL NOTES: 2012 SPECIFICATIONS

EFFECTIVE: 01–17–12
REVISED: 07–30–12

GRADE LINE:
GRADING AND SURFACING:

THE GRADE LINES SHOWN DENOTE THE FINISHED ELEVATION OF THE PROPOSED SURFACING AT GRADE POINTS SHOWN ON THE TYPICAL SECTIONS. GRADE LINES MAY BE ADJUSTED AT THEIR BEGINNING AND ENDING AND AT STRUCTURES AS DIRECTED BY THE ENGINEER IN ORDER TO SECURE A PROPER TIE–IN.

CLEARING:

CLEARING ON THIS PROJECT SHALL BE PERFORMED TO THE LIMITS ESTABLISHED BY METHOD II.

SUPERELEVATION:

ALL CURVES ON THIS PROJECT SHALL BE SUPERELEVATED IN ACCORDANCE WITH STD. NO. 225.04 USING THE RATE OF SUPERELEVATION AND RUNOFF SHOWN ON THE PLANS. SUPERELEVATION IS TO BE REVOLVED ABOUT THE GRADE POINTS SHOWN ON THE TYPICAL SECTIONS.

SHOULDER CONSTRUCTION:

ASPHALT, EARTH, AND CONCRETE SHOULDER CONSTRUCTION ON THE HIGH SIDE OF SUPERELEVATED CURVES SHALL BE IN ACCORDANCE WITH STD. NO. 560.01.

GUARDRAIL:

THE GUARDRAIL LOCATIONS SHOWN ON THE PLANS MAY BE ADJUSTED DURING CONSTRUCTION AS DIRECTED BY THE ENGINEER. THE CONTRACTOR SHOULD CONSULT WITH THE ENGINEER PRIOR TO ORDERING GUARDRAIL MATERIAL.

SUBSURFACE PLANS:

NO SUBSURFACE PLANS ARE AVAILABLE ON THIS PROJECT. THE CONTRACTOR SHOULD MAKE HIS OWN INVESTIGATION AS TO THE SUBSURFACE CONDITIONS.

UTILITIES:

UTILITY OWNERS ON THIS PROJECT ARE DUKE ENERGY AND AT&T.

ANY RELOCATION OF EXISTING UTILITIES WILL BE ACCOMPLISHED BY OTHERS.

2012 ROADWAY ENGLISH STANDARD DRAWINGS

EFFECTIVE: 01–17–12
REVISED: 07–30–12

The following Roadway Standards as appear in "Roadway Standard Drawings" Highway Design Branch – N. C. Department of Transportation – Raleigh, N. C., Dated January, 2012 are applicable to this project and by reference hereby are considered a part of these plans:

STD.NO.	TITLE
DIVISION 2 – EARTHWORK	
200.02	Method of Clearing – Method II
225.02	Guide for Grading Subgrade – Secondary and Local
225.04	Method of Obtaining Superelevation – Two Lane Pavement
DIVISION 3 – PIPE CULVERTS	
300.01	Method of Pipe Installation
DIVISION 8 – INCIDENTALS	
840.29	Frames and Narrow Slot Flat Grates
840.35	Traffic Bearing Grated Drop Inlet – for Cast Iron Double Frame and Grates
846.04	Drop Inlet Installation in Shoulder Berm Gutter
862.01	Guardrail Placement
862.02	Guardrail Installation
862.03	Structure Anchor Units
876.01	Rip Rap in Channels
876.02	Guide for Rip Rap at Pipe Outlets
876.04	Drainage Ditches with Class 'B' Rip Rap

PROJECT REFERENCE NO.	SHEET NO.
17BP.7.R.33	1-B

Note: Not to Scale

****S.U.E. = Subsurface Utility Engineering***

STATE OF NORTH CAROLINA
DIVISION OF HIGHWAYS

CONVENTIONAL PLAN SHEET SYMBOLS

BOUNDARIES AND PROPERTY:

- State Line
- County Line
- Township Line
- City Line
- Reservation Line
- Property Line
- Existing Iron Pin — EIP
- Property Corner
- Property Monument — ECM
- Parcel/Sequence Number — 123
- Existing Fence Line
- Proposed Woven Wire Fence
- Proposed Chain Link Fence
- Proposed Barbed Wire Fence
- Existing Wetland Boundary — WLB
- Proposed Wetland Boundary — WLB
- Existing Endangered Animal Boundary — EAB
- Existing Endangered Plant Boundary — EPB
- Known Soil Contamination: Area or Site
- Potential Soil Contamination: Area or Site

BUILDINGS AND OTHER CULTURE:

- Gas Pump Vent or U/G Tank Cap
- Sign — S
- Well — W
- Small Mine
- Foundation
- Area Outline
- Cemetery
- Building
- School
- Church
- Dam

HYDROLOGY:

- Stream or Body of Water
- Hydro, Pool or Reservoir
- Jurisdictional Stream — JS
- Buffer Zone 1 — BZ 1
- Buffer Zone 2 — BZ 2
- Flow Arrow
- Disappearing Stream
- Spring
- Wetland
- Proposed Lateral, Tail, Head Ditch — FLOW
- False Sump

RAILROADS:

- Standard Gauge — CSX TRANSPORTATION
- RR Signal Milepost — MILEPOST 35
- Switch — SWITCH
- RR Abandoned
- RR Dismantled

RIGHT OF WAY:

- Baseline Control Point
- Existing Right of Way Marker
- Existing Right of Way Line
- Proposed Right of Way Line — RW
- Proposed Right of Way Line with Iron Pin and Cap Marker — RW
- Proposed Right of Way Line with Concrete or Granite R/W Marker — RW
- Proposed Control of Access Line with Concrete C/A Marker — CA
- Existing Control of Access — CA
- Proposed Control of Access — CA
- Existing Easement Line — E
- Proposed Temporary Construction Easement — E
- Proposed Temporary Drainage Easement — TDE
- Proposed Permanent Drainage Easement — PDE
- Proposed Permanent Drainage / Utility Easement — DUE
- Proposed Permanent Utility Easement — PUE
- Proposed Temporary Utility Easement — TUE
- Proposed Aerial Utility Easement — AUE
- Proposed Permanent Easement with Iron Pin and Cap Marker

ROADS AND RELATED FEATURES:

- Existing Edge of Pavement
- Existing Curb
- Proposed Slope Stakes Cut — C
- Proposed Slope Stakes Fill — F
- Proposed Curb Ramp — CR
- Existing Metal Guardrail
- Proposed Guardrail
- Existing Cable Guiderail
- Proposed Cable Guiderail
- Equality Symbol
- Pavement Removal

VEGETATION:

- Single Tree
- Single Shrub
- Hedge
- Woods Line
- Orchard
- Vineyard — Vineyard

EXISTING STRUCTURES:

MAJOR:

- Bridge, Tunnel or Box Culvert — CONC
- Bridge Wing Wall, Head Wall and End Wall — CONC WW

MINOR:

- Head and End Wall — CONC HW
- Pipe Culvert
- Footbridge
- Drainage Box: Catch Basin, DI or JB — CB
- Paved Ditch Gutter
- Storm Sewer Manhole — S
- Storm Sewer — S

UTILITIES:

POWER:

- Existing Power Pole
- Proposed Power Pole
- Existing Joint Use Pole
- Proposed Joint Use Pole
- Power Manhole — P
- Power Line Tower
- Power Transformer
- U/G Power Cable Hand Hole
- H-Frame Pole
- Recorded U/G Power Line — P
- Designated U/G Power Line (S.U.E.*) — P

TELEPHONE:

- Existing Telephone Pole
- Proposed Telephone Pole
- Telephone Manhole — T
- Telephone Booth
- Telephone Pedestal — T
- Telephone Cell Tower
- U/G Telephone Cable Hand Hole — HH
- Recorded U/G Telephone Cable — T
- Designated U/G Telephone Cable (S.U.E.*) — T
- Recorded U/G Telephone Conduit — TC
- Designated U/G Telephone Conduit (S.U.E.*) — TC
- Recorded U/G Fiber Optics Cable — T FO
- Designated U/G Fiber Optics Cable (S.U.E.*) — T FO

WATER:

- Water Manhole — W
- Water Meter
- Water Valve
- Water Hydrant
- Recorded U/G Water Line — W
- Designated U/G Water Line (S.U.E.*) — W
- Above Ground Water Line — A/G Water

TV:

- TV Satellite Dish
- TV Pedestal — C
- TV Tower
- U/G TV Cable Hand Hole — HH
- Recorded U/G TV Cable — TV
- Designated U/G TV Cable (S.U.E.*) — TV
- Recorded U/G Fiber Optic Cable — TV FO
- Designated U/G Fiber Optic Cable (S.U.E.*) — TV FO

GAS:

- Gas Valve
- Gas Meter
- Recorded U/G Gas Line — G
- Designated U/G Gas Line (S.U.E.*) — G
- Above Ground Gas Line — A/G Gas

SANITARY SEWER:

- Sanitary Sewer Manhole
- Sanitary Sewer Cleanout
- U/G Sanitary Sewer Line — SS
- Above Ground Sanitary Sewer — A/G Sanitary Sewer
- Recorded SS Forced Main Line — FSS
- Designated SS Forced Main Line (S.U.E.*) — FSS

MISCELLANEOUS:

- Utility Pole
- Utility Pole with Base
- Utility Located Object
- Utility Traffic Signal Box — S
- Utility Unknown U/G Line — ?UTL
- U/G Tank; Water, Gas, Oil
- Underground Storage Tank, Approx. Loc. — UST
- A/G Tank; Water, Gas, Oil
- Geoenvironmental Boring
- U/G Test Hole (S.U.E.*)
- Abandoned According to Utility Records — AATUR
- End of Information — E.O.I.

DocuSign Envelope ID: 6F16CB68-8755-4C03-B561-56C7684F2972

REVISIONS

PROJECT REFERENCE NO.	SHEET NO.
17BP.7.R.33	2

Kimley-Horn and Associates, Inc.
P.O. BOX 33068
RALEIGH, N.C. 27636-3068

ROADWAY DESIGN ENGINEER

NORTH CAROLINA PROFESSIONAL SEAL 024436 ENGINEER JEFFREY W. MOORE
6/19/2015

-L- SR 1859 (BOYLSTON RD)

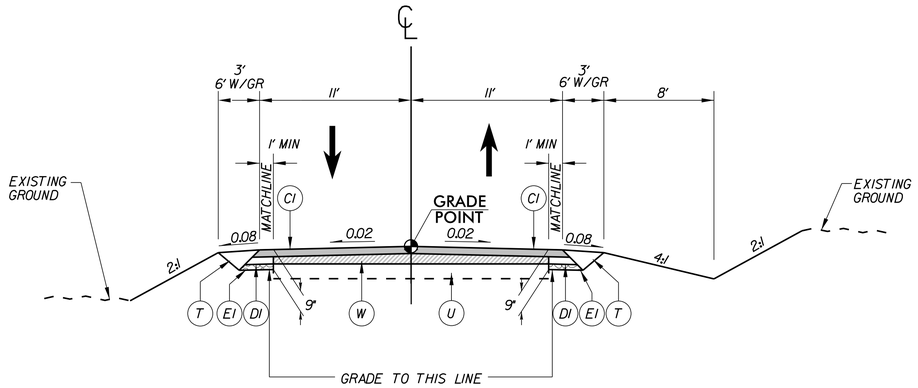

TYPICAL SECTION NO. 1

-L- STA 10+13.00 TO STA 12+16.81 (BEGIN BRIDGE)
-L- STA 13+09.19 (END BRIDGE) TO STA 15+32.00

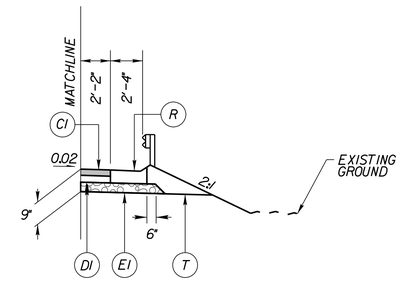

TYPICAL SECTION NO. 1A

USE IN CONJUNCTION WITH TYPICAL SECTION 1

-L- STA 11+73.00 TO 12+05.00 (RT)
-L- STA 11+95.00 TO 12+05.00 (LT)

PAVEMENT SCHEDULE

C1	PROP. APPROX. 2" ASPHALT CONCRETE SURFACE COURSE TYPE S9.5B, AT AN AVERAGE RATE OF 224 LBS. PER SQ.YD.
C2	PROP. VAR. DEPTH ASPHALT CONCRETE SURFACE COURSE, TYPE S9.5B, AT AN AVERAGE RATE OF 112 LBS. PER SQ.YD. PER 1" DEPTH. TO BE PLACED IN LAYERS NOT LESS THAN 1.5" IN DEPTH OR GREATER THAN 2" IN DEPTH.
D1	PROP. APPROX. 3" ASPHALT CONCRETE BASE COURSE TYPE I19.0B, AT AN AVERAGE RATE OF 342 LBS. PER SQ.YD.
D2	PROP. VAR. DEPTH ASPHALT CONCRETE BASE COURSE, TYPE I19.0B, AT AN AVERAGE RATE OF 114 LBS. PER SQ.YD. PER 1" DEPTH TO BE PLACED IN LAYERS NOT LESS THAN 3" OR GREATER THAN 5.5" DEPTH
E1	PROP. APPROX. 4" ASPHALT CONCRETE BASE COURSE TYPE B25.0B, AT AN AVERAGE RATE OF 456 LBS. PER SQ.YD.
E2	PROP. VAR. DEPTH ASPHALT CONCRETE BASE COURSE, TYPE B25.0B, AT AN AVERAGE RATE OF 114 LBS. PER SQ.YD. PER 1" DEPTH TO BE PLACED IN LAYERS NOT LESS THAN 3" OR GREATER THAN 5.5" DEPTH
J1	PROPOSED 8" AGGREGATE BASE COURSE
R	PROPOSED SHOULDER BERM GUTTER
T	EARTH MATERIAL
U	EXISTING PAVEMENT
W	VARIABLE DEPTH ASPHALT PAVEMENT (SEE DETAIL W)

NOTES
1. MILL NOTCH TO KEY-IN S9.5B FROM
   -L- STA 10+13.00 TO STA 10+38.00
   AND -L- STA 15+07.00 TO STA 15+32.00
2. PAVEMENT EDGE SLOPES ARE 1:1 UNLESS OTHERWISE INDICATED

-L- SR 1859 (BOYLSTON RD)

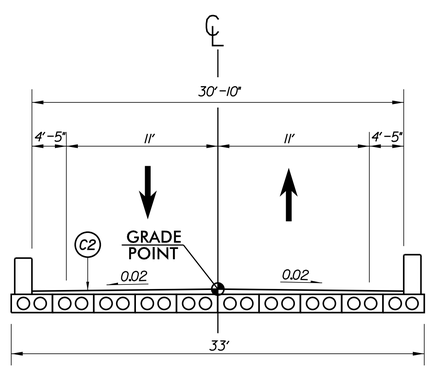

BRIDGE TYPICAL SECTION NO. 1

-L- STA 12+16.81 TO STA 13+09.19

-DI- DRIVEWAY

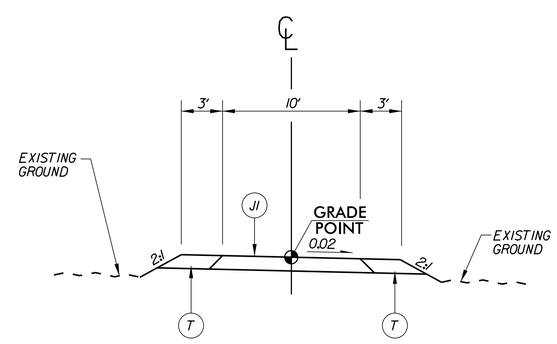

DRIVEWAY TYPICAL SECTION NO. 1

-Y1- STA 10+00.00 TO STA 11+59.99

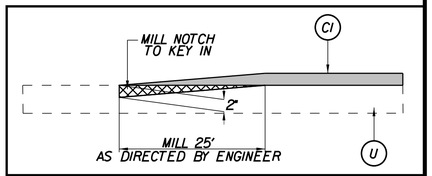

MILLING DETAIL

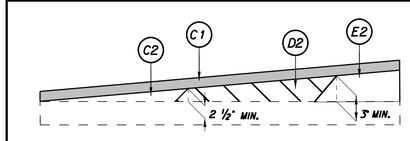

DETAIL W SHOWING METHOD OF WEDGING

K:\RAL_Roadway\011036193 - 400338\Roadway\Proj\400338_rdy_typdgn

6/19/2015

COMPUTED BY: MTH	DATE: 02-13-2013
CHECKED BY: JWM	DATE: 02-13-2013

PROJECT REFERENCE NO.	SHEET NO.
17BP.7.R.33	3

GUARDRAIL SUMMARY

G = GATING IMPACT ATTENUATOR TYPE 350
NG = NON-GATING IMPACT ATTENUATOR TYPE 350

SURVEY LINE	BEG. STA.	END STA.	LOCATION	LENGTH: STRAIGHT	LENGTH: SHOP CURVED	LENGTH: DOUBLE FACED	WARRANT POINT: APPROACH END	WARRANT POINT: TRAILING END	ANCHORS: GRAU 350	ANCHORS: TYPE III	ANCHORS: CAT-1	ANCHORS: AT-1	IMPACT ATTENUATOR TYPE 350: EA	G	NG				REMARKS
-L-	11+36.75	12+18.00	LT	81.25			11+95		1	1									
-L-	11+11.75	12+18.00	RT	106.25			11+61		1	1									
-L-	13+08.00	13+89.25	LT	81.25			13+40		1	1									
-L-	13+08.00	13+89.25	RT	81.25			13+26		1	1									
		SUBTOTAL		350															
		LESS ANCHOR DEDUCTIONS																	
		GRAU 350 4 @ 50.00′ =		200															
		TYPE III 4 @ 18.75′ =		75															
		TOTAL		75															
		SAY		75															

ADDITIONAL GUARDRAIL POSTS = 5 EA

SUB-REGIONAL & REGIONAL
LIST OF PIPE, ENDWALLS, ETC. (FOR PIPES 48" & UNDER)

STATION	LOCATION (LT, RT, OR CL)'	STRUCTURE NO. FROM	STRUCTURE NO. TO	TOP ELEVATION	INVERT ELEVATION	INVERT ELEVATION	SLOPE CRITICAL
11+26 -L-	LT	405			841.2	840.3	
10+67 -D1-	LT	406			837.0	836.9	
12+00 -L-	LT	404		844.4	841.4		
12+00 -L-	CL	404	403		841.4	840.7	
12+00 -L-	RT	403		844.5	840.7		
12+00 -L-	RT	403	402		840.7	840.26	
11+78 -L-	RT	402		844.4	840.3		
11+78 -L-	RT	402	401		840.3	839.81	
SHEET TOTALS							

DRAINAGE PIPE (RCP, CSP, CAAP, HDPE, or PVC); C.S. PIPE (THICKNESS OR GAUGE: .064, .064, .064, .064, .079, .079, .109, .109); R.C. PIPE CLASS III; R.C. PIPE CLASS IV

STATION	DRAINAGE PIPE 12"	15"	18"	24"	30"	36"	42"	48"	DO NOT USE RCP	DO NOT USE CSP	DO NOT USE CAAP	DO NOT USE HDPE	C.S. PIPE 12"–48"	R.C. PIPE CLASS III 12"–48"	R.C. PIPE CLASS IV 12"	15"	18"	24"	30"	36"	42"	48"
11+26 -L-																	24					
10+67 -D1-																						28
12+00 -L- (LT)																						
12+00 -L- (CL)																	28					
12+00 -L- (RT 403)																						
12+00 -L- (RT 403–402)																	20					
11+78 -L- (RT 402)																						
11+78 -L- (RT 402–401)			20							X	X											
SHEET TOTALS			20														72					28

STATION	** " R.C. PIPE (CLASS V)	*** RC PIPE CULVERTS, CONTRACTOR DESIGN	*** RC PIPE CULVERTS, CONTRACTOR DESIGN	15" SIDE DRAIN PIPE	18" SIDE DRAIN PIPE	ENDWALLS STD. 838.01 OR STD. 838.11 (UNLESS NOTED OTHERWISE) CU. YARDS R.C.P.	C.S.P.	QUANTITIES FOR DRAINAGE STRUCTURES PER EACH (0' THRU 5.0')	*TOTAL L.F. FOR PAY QUANTITY SHALL BE COL. 'A' + (1.3 X COL.'B') LIN. FT. A 5.0' THRU 10.0'	B 10.0' AND ABOVE	C.B. STD. 840.01 OR STD. 840.02	FRAME, GRATES, AND HOOD STANDARD 840.03 TYPE OF GRATE E	F	G	CONCRETE TRANSITIONAL SECTION DROP INLET	CATCH BASIN	D.I. STD. 840.14 OR STD. 840.15	D.I. FRAME AND GRATE STD. 840.16	G.D.I. TYPE "A" STD. 840.17 OR 840.26	G.D.I. TYPE "B" STD. 840.18 OR 840.27	G.D.I. TYPE "D" STD. 840.19 OR 840.28	G.D.I. FRAME WITH GRATE STD. 840.20	G.D.I. FRAME WITH TWO GRATES STD. 840.22	G.D.I. (N.S.) FRAME WITH TWO GRATES STD. 840.29	G.D.I. (N.S.) FRAME WITH TWO GRATES STD. 840.24	J.B. STD. 840.31 OR 840.32	TRAFFIC BEARING G.D.I. STD. 840.35	STEEL GRATE AND FRAME STD. 840.37	TRAFFIC BEARING J.B. STD. 840.34	PARALLEL PIPE END SECTION STD. 310.02	DRAINAGE PIPE ELBOWS NO. & SIZE	CONC. & BRICK PIPE PLUG, C.Y. STD. 840.71	CONC. COLLARS CL. "B" C.Y. STD. 840.72	PIPE REMOVAL LIN. FT.	REMARKS
11+26 -L-																																				
10+67 -D1-						1.56																													25	BURY 10", REMOVE DOWNSTREAM 48"
12+00 -L- (LT)								1																	1			1								
12+00 -L- (CL)																																				
12+00 -L- (RT 403)								1																	1			1								
12+00 -L- (RT 403–402)																																				
11+78 -L- (RT 402)								1																	1			1								
11+78 -L- (RT 402–401)																																				
SHEET TOTALS						2		3																	3			3							25	

ABBREVIATIONS

C.B.	CATCH BASIN
N.D.I.	NARROW DROP INLET
D.I.	DROP INLET
G.D.I.	GRATED DROP INLET
G.D.I.(N.S.)	(NARROW SLOT)
J.B.	JUNCTION BOX
M.H.	MANHOLE
T.B.D.I.	TRAFFIC BEARING DROP INLET
T.B.J.B.	TRAFFIC BEARING JUNCTION BOX

SUMMARY OF EARTHWORK
IN CUBIC YARDS

LOCATION	UNCLASSIFIED EXCAVATION	UNDERCUT	EMBT+%	BORROW	WASTE
-L- STA 10+13.00 TO STA 12+16.81	39		146	107	0
-L- STA 13+09.19 TO STA 15+32.00	1		100	99	0
TOTALS	40		246	206	0
WASTE TO REPLACE BORROW				0	0
PROJECT TOTALS	40		246	206	0
REPLACE TOPSOIL ON BORROW (5%)				10	
GRAND TOTALS	40		246	216	0
SAY	50			250	

NOTE: "QUANTITIES ARE APPROXIMATE ONLY. THE RESIDENT ENGINEER WILL RE-CROSS-SECTION THE WORK ACCURATELY WHEN THE PROJECT IS STAKED OUT. THESE CROSS-SECTION NOTES WILL BE USED IN COMPUTING THE FINAL QUANTITIES FOR WHICH THE CONTRACTOR WILL BE PAID."

NOTE: EARTHWORK QUANTITIES ARE CALCULATED BY THE ROADWAY DESIGN UNIT. THESE QUANTITIES ARE BASED IN PART ON SUBSURFACE DATA PROVIDED BY THE GEOTECHNICAL ENGINEERING UNIT.

DocuSign Envelope ID: 2F1CB6A3-77F1-459E-AD87-A7F4E4A6A63B

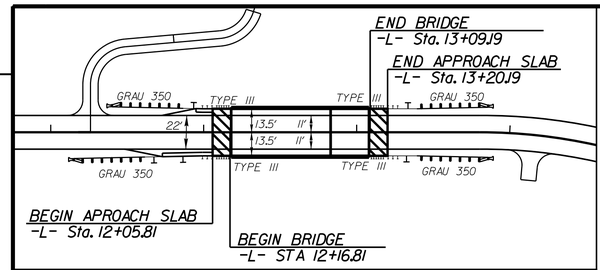

SKETCH SHOWING BRIDGE /PAVEMENT RELATIONSHIP

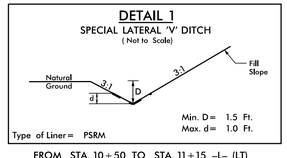

FROM STA. 10+50 TO STA. 11+15 -L- (LT)
FROM STA. 11+00 TO STA. 12+06 -L- (RT)
FROM STA. 13+20 TO STA. 15+00 -L- (RT)

* DESIGN EXCEPTION
SAG VERTICAL CURVE K
VERTICAL SSD

DATUM DESCRIPTION

THE LOCALIZED COORDINATE SYSTEM DEVELOPED FOR THIS PROJECT IS BASED ON THE STATE PLANE COORDINATES ESTABLISHED BY NCDOT FOR MONUMENT "B4536-2"
WITH NAD 83 STATE PLANE GRID COORDINATES OF
NORTHING: 850654.555(ft) EASTING: 1696750.947(ft)
ELEVATION: 906.10'(ft)
THE AVERAGE COMBINED GRID FACTOR USED ON THIS PROJECT (GROUND TO GRID) IS: 0.9999394514
THE N.C. LAMBERT GRID BEARING AND LOCALIZED HORIZONTAL GROUND DISTANCE FROM "B4536-2" TO -L- STATION 9+50.00 IS
S 88° 09' 51" E 1022.86'
ALL LINEAR DIMENSIONS ARE LOCALIZED HORIZONTAL DISTANCES
VERTICAL DATUM USED IS NGVD 88

REVISIONS

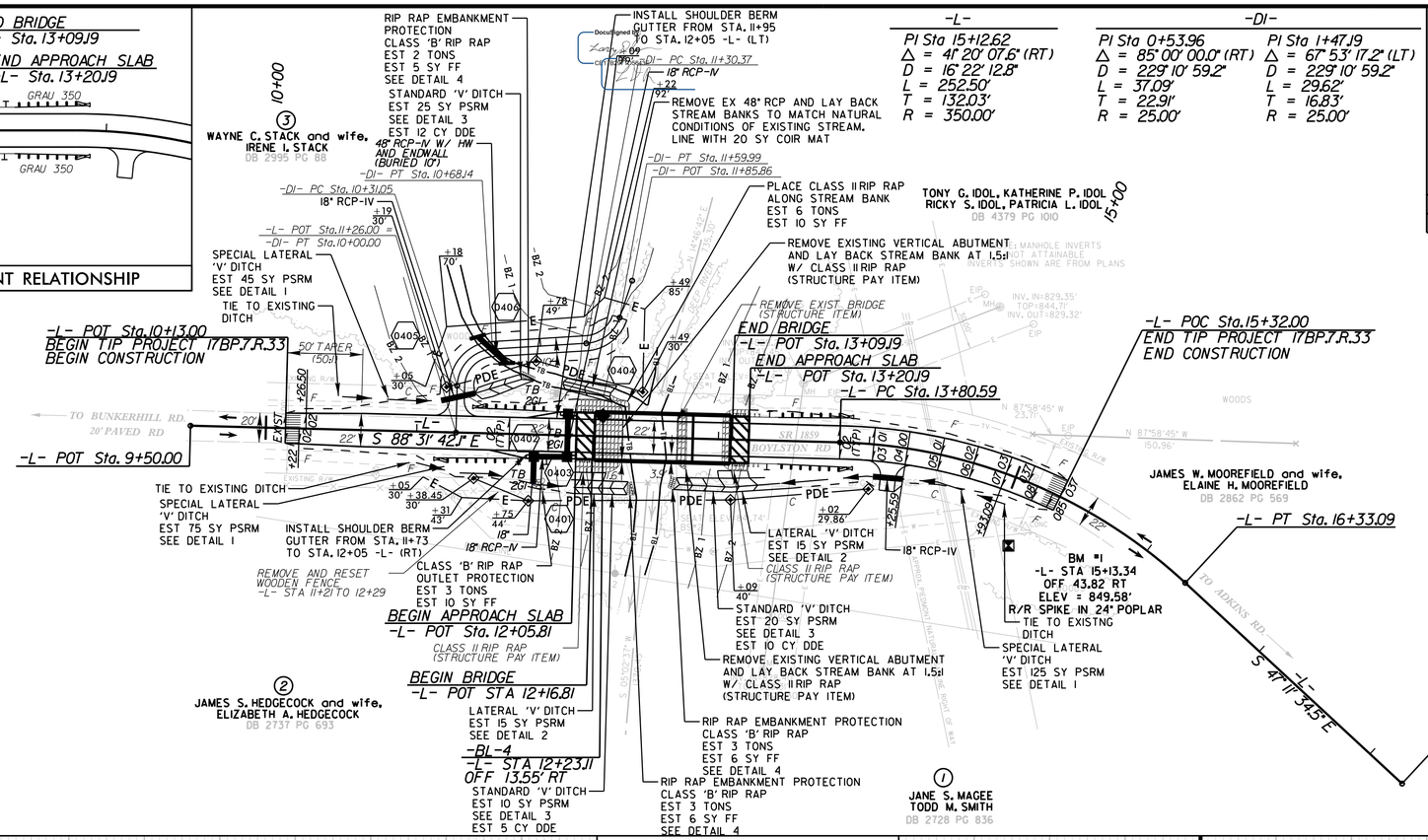

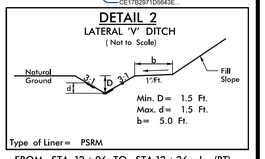

FROM STA. 12+06 TO STA. 12+26 -L- (RT)
FROM STA. 13+00 TO STA. 13+20 -L- (RT)

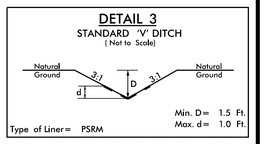

FROM STA. 11+38 TO STA. 11+70 -L- (LT)
FROM STA. 12+26 TO STA. 12+40 -L- (RT)
FROM STA. 12+70 TO STA. 13+00 -L- (RT)

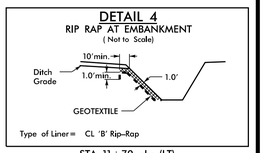

STA. 11+70 -L- (LT)
STA. 12+40 -L- (RT)
STA. 12+70 -L- (RT)

PROJECT REFERENCE NO.	SHEET NO.
17BP.7.R.33	4
R/W SHEET NO.	

Kimley-Horn and Associates, Inc.
P.O. BOX 33068
RALEIGH, N.C. 27636-3068

RIGHT-OF-WAY REV.
CONST. REV.

ROADWAY DESIGN ENGINEER
NORTH CAROLINA PROFESSIONAL SEAL 024436 ENGINEER JEFFREY W. MOORE
6/22/2015

HYDRAULICS ENGINEER
NORTH CAROLINA PROFESSIONAL SEAL 026480 ENGINEER LARRY D. ROBINSON, JR.
DocuSigned by: Larry D. Robinson
CE1FB297105643E...
8/22/2015

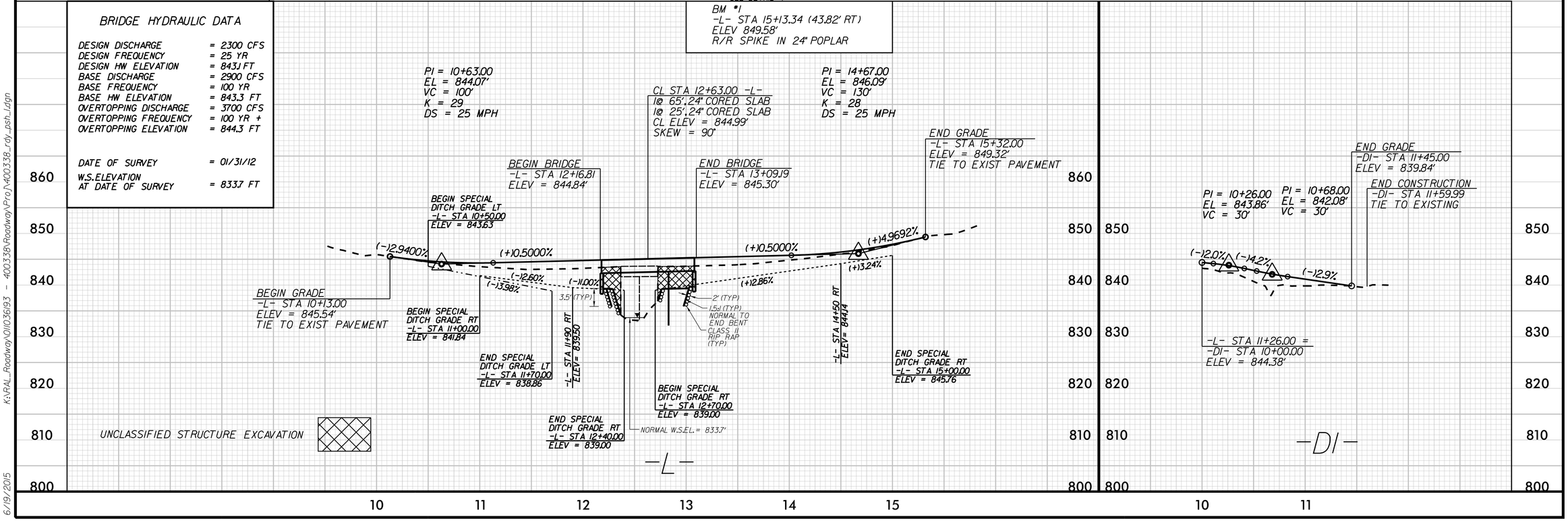

K:\RAL_Roadway\01036193 - 400338\Roadway\Proj\400338_rdy_psh_1.dgn
6/19/2015

DocuSign Envelope ID: 6F16CB68-8755-4C03-B561-56C7684F2972

PROJ. REFERENCE NO.	SHEET NO.
17BP.7.R.33	TMP-1

ROADWAY STANDARD DRAWINGS

THE FOLLOWING ROADWAY STANDARDS AS SHOWN IN "ROADWAY STANDARD DRAWINGS" - PROJECT SERVICES UNIT - N.C. DEPARTMENT OF TRANSPORTATION - RALEIGH, N.C., DATED JANAUARY 2012 ARE APPLICABLE TO THIS PROJECT AND BY REFERENCE HEREBY ARE CONSIDERED A PART OF THESE PLANS:

STD. NO.	TITLE
1101.03	TEMPORARY ROAD CLOSURES
1110.01	STATIONARY WORK ZONE SIGNS
1145.01	BARRICADES

MANAGEMENT STRATEGIES

CONSTRUCTION SUMMARY:
PROPOSED BRIDGE REPLACEMENT WILL BE CONSTRUCTED AWAY FROM TRAFFIC USING A ROAD CLOSURE AND DETOUR ROUTE.

GENERAL NOTES

CHANGES MAY BE REQUIRED WHEN PHYSICAL DIMENSIONS IN THE DETAIL DRAWINGS, STANDARD DETAILS AND ROADWAY DETAILS ARE NOT ATTAINABLE TO MEET FIELD CONDITIONS, OR RESULT IN DUPLICATE, OR UNDESIRED OVERLAPPING OF DEVICES. MODIFICATION MAY INCLUDE: MOVING, SUPPLEMENTING, COVERING OR REMOVAL OF DEVICES, AS DIRECTED BY THE ENGINEER.

THE FOLLOWING GENERAL NOTES APPLY AT ALL TIMES FOR THE DURATION OF THE CONSTRUCTION PROJECT, EXCEPT WHEN OTHERWISE NOTED IN THE PLAN, OR DIRECTED BY THE ENGINEER.

TRAFFIC PATTERN ALTERATIONS

A) NOTIFY THE ENGINEER TWENTY ONE (21) CALENDAR DAYS PRIOR TO ANY TRAFFIC PATTERN ALTERATION.

SIGNING

B) INSTALL ADVANCE WORK ZONE WARNING SIGNS WHEN WORK IS WITHIN 40 FT FROM THE EDGE OF TRAVEL LANE AND NO MORE THAN THREE (3) DAYS PRIOR TO THE BEGINNING OF CONSTRUCTION.

C) PROVIDE PERMANENT SIGNING AND DEVICES REQUIRED TO CLOSE THE ROAD ACCORDING TO THE ROADWAY STANDARD DRAWINGS AND TRAFFIC CONTROL PLANS.

D) PROVIDE SIGNING REQUIRED FOR THE OFF-SITE DETOUR ROUTES AS SHOWN IN THE TRAFFIC CONTROL PLANS.

E) COVER OR REMOVE ALL SIGNS REQUIRED FOR THE OFF-SITE DETOUR WHEN THE DETOUR IS NOT IN OPERATION.

F) ENSURE ALL NECESSARY SIGNING IS IN PLACE PRIOR TO ALTERING ANY TRAFFIC PATTERN.

TRAFFIC CONTROL DEVICES

G) PLACE TYPE III BARRICADES, WITH "ROAD CLOSED" SIGN R11-2 ATTACHED, OF SUFFICIENT LENGTH TO CLOSE ENTIRE ROADWAY.

PAVEMENT MARKINGS AND MARKERS

H) TIE PROPOSED PAVEMENT MARKING LINES TO EXISTING PAVEMENT MARKING LINES.

PHASING

STEP 1: USING ROADWAY STANDARD DRAWING NUMBER 1101.03, SHEET 1 OF 9, AND SHEET TMP-2, PERFORM THE FOLLOWING:

- INSTALL ALL ROAD CLOSURE AND DETOUR SIGNING, INCLUDING BARRICADES
- IMPLEMENT A TEMPORARY CLOSURE OF SR 1859 (BOYLSTON RD) USING A DETOUR ALONG SR 2007 (BUNKER HILL RD), SR 1008 (WEST MARKET ST), SR 1850 (SANDY RIDGE RD), SR 1906 (LAKEDALE RD), AND SR 1852 (ADKINS RD). ALLOW LOCAL TRAFFIC ACCESS ALONG SR 1859 TO APPROXIMATELY 0.12 MILES WEST AND 0.09 MILES EAST OF BRIDGE #338 (JUST AFTER THE FINAL DRIVEWAYS PRIOR TO THE BRIDGE.)

STEP 2: REMOVE EXISTING BRIDGE #338 AND CONSTRUCT THE PROPOSED BRIDGE AND APPROACHES AS SHOWN IN THE CONSTRUCTION PLANS.

STEP 3: INSTALL ALL FINAL PAVEMENT MARKINGS.

STEP 4: REMOVE ALL TRAFFIC CONTROL SIGNING AND DEVICES AND RE-OPEN 1859 (BOYLSTON RD) TO THE FINAL TRAFFIC PATTERN.

Kimley-Horn and Associates, Inc.

APPROVED: _____ DATE: _____

SEAL

NORTH CAROLINA PROFESSIONAL SEAL 024436 ENGINEER JEFFREY W. MOORE

6/19/2015

DIVISION OF HIGHWAYS STATE OF NORTH CAROLINA DEPARTMENT OF TRANSPORTATION WORK ZONE TRAFFIC CONTROL

K:\RAL_Roadway\0\I036\93 - 40033B\Traffic\TrafficControl\TCP\TMP01.dgn

6/19/2015

DocuSign Envelope ID: 6F16CB68-8755-4C03-B561-56C7684F2972

PROJ. REFERENCE NO.	SHEET NO.
17BP.7.R.33	TMP-2

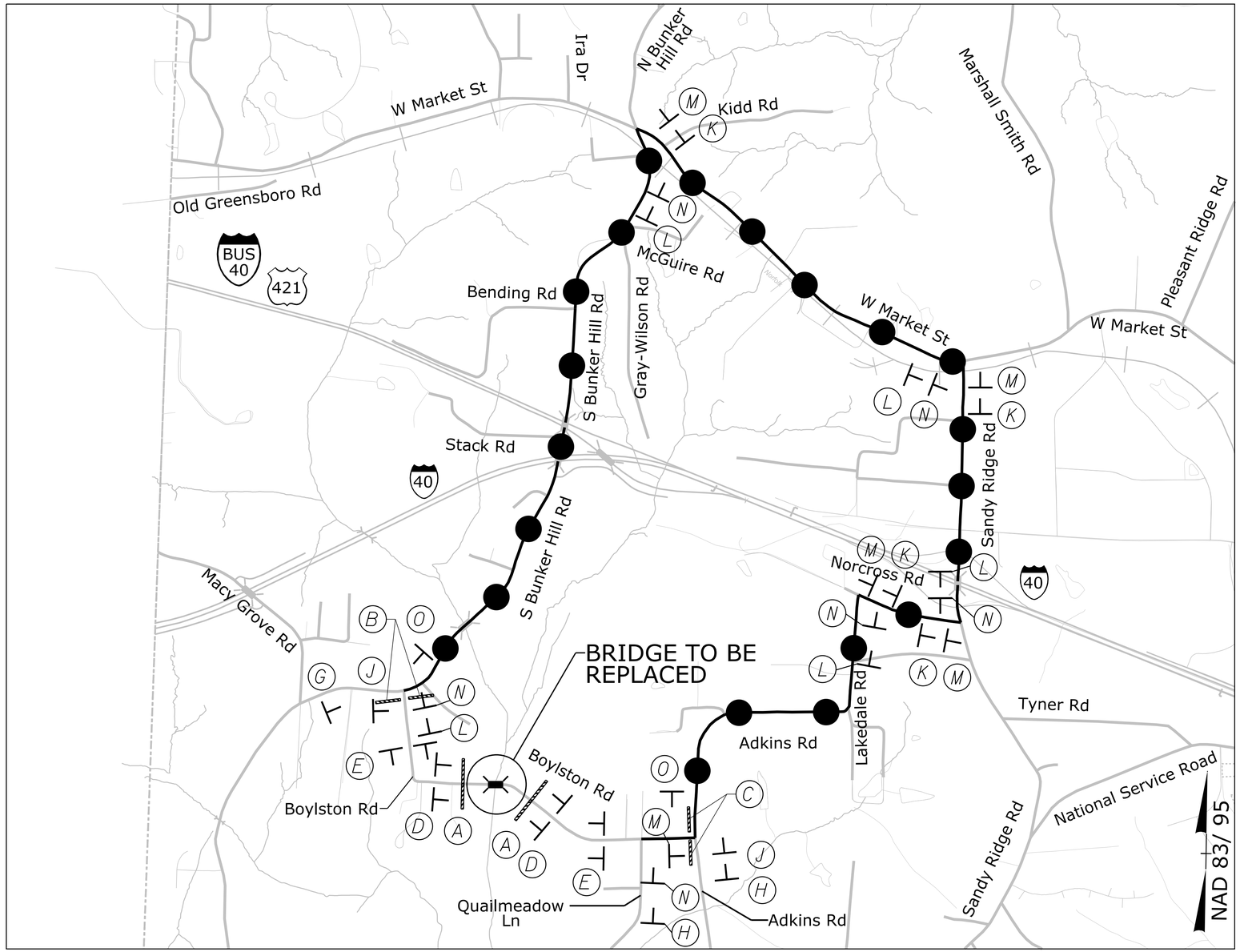

SCALE: 1" = 1000'

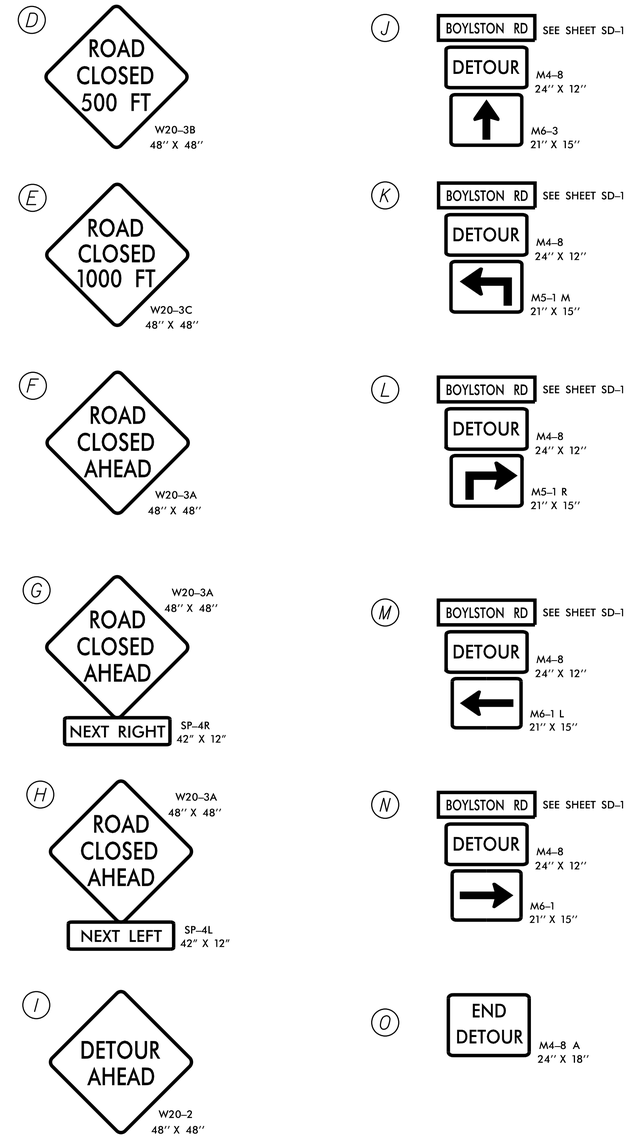

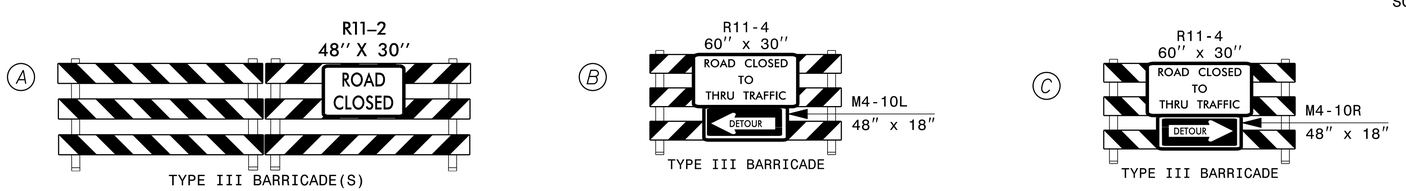

LEGEND

DETOUR ROUTE

STATIONARY SIGN

Kimley-Horn and Associates, Inc.

APPROVED:_____ DATE:_____

SEAL

NORTH CAROLINA PROFESSIONAL SEAL 024436 ENGINEER JEFFREY W. MOORE

6/19/2015

DIVISION OF HIGHWAYS STATE OF NORTH CAROLINA DEPARTMENT OF TRANSPORTATION WORK ZONE TRAFFIC CONTROL

K:\RAL_Roadway\01\036\93 - 40033B\Traffic\TrafficControl\TCP\TMP02.dgn

6/19/2015

PROJECT: 17BP.7.R.33

STATE	STATE PROJECT REFERENCE NO.	SHEET NO.	TOTAL SHEETS
N.C.	17BP.7.R.33	EC-1	

STATE PROJ. NO.	F.A. PROJ. NO.	DESCRIPTION

STATE OF NORTH CAROLINA
DIVISION OF HIGHWAYS

PLAN FOR PROPOSED
HIGHWAY EROSION CONTROL

GUILFORD COUNTY

LOCATION: BRIDGE NO. 338 OVER WEST FORK OF DEEP RIVER (TRIBUTARY 1) ON SR 1859 (BOYLSTON ROAD)

TYPE OF WORK: GRADING, PAVING, DRAINAGE, AND STRUCTURE

NC GRID
NAD 83/NSRS 2007

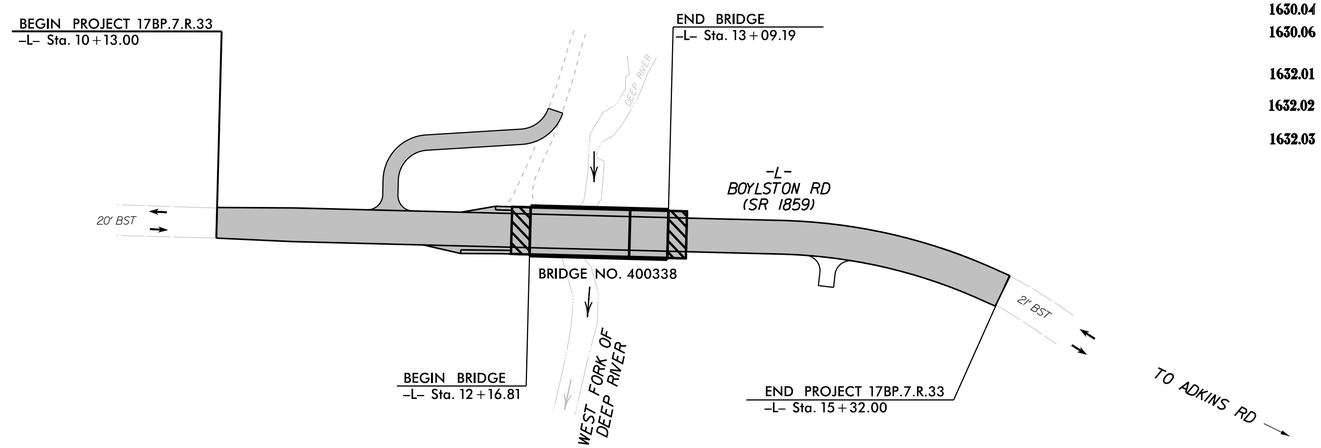

EROSION AND SEDIMENT CONTROL MEASURES

Std. #	Description	Symbol
1630.03	Temporary Silt Ditch	TSD
1630.05	Temporary Diversion	TD
1605.01	Temporary Silt Fence	
1606.01	Special Sediment Control Fence	
1622.01	Temporary Berms and Slope Drains	
1630.02	Silt Basin Type B	
1633.01	Temporary Rock Silt Check Type-A	
	Temporary Rock Silt Check Type-A with Matting and Polyacrylamide (PAM)	
1633.02	Temporary Rock Silt Check Type-B	
	Wattle / Coir Fiber Wattle	
	Wattle / Coir Fiber Wattle with Polyacrylamide (PAM)	
1634.01	Temporary Rock Sediment Dam Type-A	
1634.02	Temporary Rock Sediment Dam Type-B	
1635.01	Rock Pipe Inlet Sediment Trap Type-A	
1635.02	Rock Pipe Inlet Sediment Trap Type-B	
1630.04	Stilling Basin	
1630.06	Special Stilling Basin	
	Rock Inlet Sediment Trap:	
1632.01	Type A	A
1632.02	Type B	B
1632.03	Type C	C
	Skimmer Basin	
	Tiered Skimmer Basin	
	Infiltration Basin	

THIS PROJECT CONTAINS EROSION CONTROL PLANS FOR CLEARING AND GRUBBING PHASE OF CONSTRUCTION.

THIS PROJECT HAS BEEN DESIGNED TO SENSITIVE WATERSHED STANDARDS.

ENVIRONMENTALLY SENSITIVE AREA(S) EXIST ON THIS PROJECT

Refer To E. C. Special Provisions for Special Considerations.

ROADSIDE ENVIRONMENTAL UNIT
DEPARTMENT OF TRANSPORTATION
DIVISION OF HIGHWAYS
RALEIGH, N.C.

2012 STANDARD SPECIFICATIONS

Catherine A. Murrell
LEVEL IIIA NAME

706
LEVEL IIIA CERTIFICATION NO.

CONTRACT:

GRAPHIC SCALE

25 0 50
PLANS

25 0 50
PROFILE (HORIZONTAL)

5 0 10
PROFILE (VERTICAL)

ROADSIDE ENVIRONMENTAL UNIT
DIVISION OF HIGHWAYS
STATE OF NORTH CAROLINA

THESE EROSION AND SEDIMENT CONTROL PLANS COMPLY WITH THE REGULATIONS SET FORTH BY THE NCG-010000 GENERAL CONSTRUCTION PERMIT EFFECTIVE AUGUST 3, 2011 ISSUED BY THE NORTH CAROLINA DEPARTMENT OF ENVIRONMENT AND NATURAL RESOURCES DIVISION OF WATER QUALITY.

PLANS PREPARED FOR THE NCDOT BY:

Kimley-Horn and Associates,
© 2013
Post Office Box 33068
Raleigh, North Carolina 27636
PE NO. F-0102

2012 STANDARD SPECIFICATIONS

Roadway Standard Drawings

The following roadway english standards as appear in "Roadway Standard Drawings"– Roadway Design Unit – N. C. Department of Transportation – Raleigh, N. C., dated January 2012 and the latest revison thereto are applicable to this project and by reference hereby are considered a part of these plans.

1604.01	Railroad Erosion Control Detail	1632.01	Rock Inlet Sediment Trap Type A
1605.01	Temporary Silt Fence	1632.02	Rock Inlet Sediment Trap Type B
1606.01	Special Sediment Control Fence	1632.03	Rock Inlet Sediment Trap Type C
1607.01	Gravel Construction Entrance	1633.01	Temporary Rock Silt Check Type A
1622.01	Temporary Berms and Slope Drains	1633.02	Temporary Rock Silt Check Type B
1630.01	Riser Basin	1634.01	Temporary Rock Sediment Dam Type A
1630.02	Silt Basin Type B	1634.02	Temporary Rock Sediment Dam Type B
1630.03	Temporary Silt Ditch	1635.01	Rock Pipe Inlet Sediment Trap Type A
1630.04	Stilling Basin	1635.02	Rock Pipe Inlet Sediment Trap Type B
1630.05	Temporary Diversion	1640.01	Coir Fiber Baffle
1630.06	Special Stilling Basin	1645.01	Temporary Stream Crossing
1631.01	Matting Installation		

K:\RAL_Roadway\01\036\93 – 400338\Roadway\Proj\400338_rdy_ero_psh_tshdgn

6/19/2015

PROJECT REFERENCE NO.	SHEET NO.
17BP.7.R.33	EC-2

TEMPORARY ROCK SILT CHECK TYPE 'A' WITH EXCELSIOR MATTING AND POLYACRYLAMIDE (PAM)

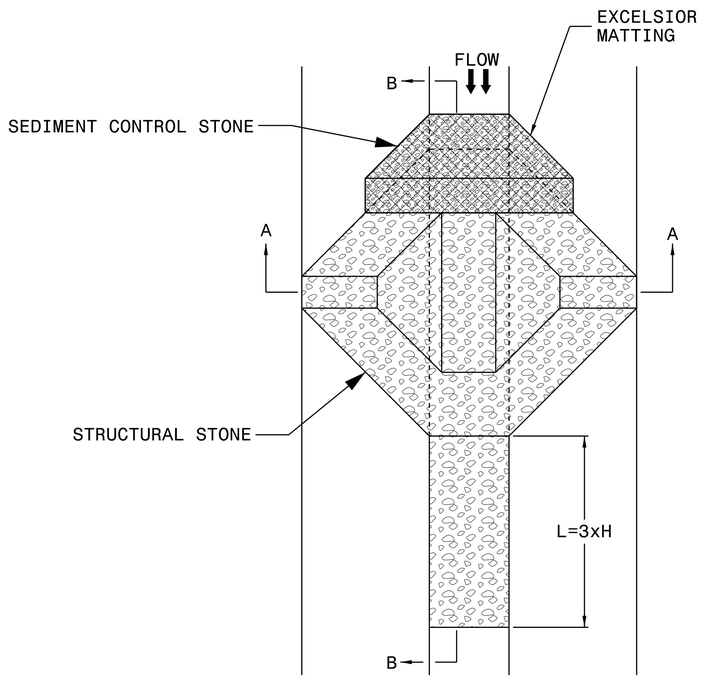

PLAN

NOTES

USE EXCELSIOR FOR MATTING MATERIAL AND ANCHOR MATTING SECTION AT TOP AND BOTTOM WITH CLASS B STONE.

PRIOR TO POLYACRYLAMIDE (PAM) APPLICATION, OBTAIN A SOIL SAMPLE FROM PROJECT LOCATION, AND FROM OFFSITE MATERIAL, AND ANALYZE FOR APPROPRIATE PAM FLOCCULANT TO BE APPLIED TO EACH ROCK SILT CHECK.

INITIALLY APPLY 3.5 OUNCES OF POLYACRYLAMIDE (PAM) TO TOP OF MATTING SECTION AND AFTER EVERY RAINFALL EVENT THAT EQUALS OR EXCEEDS 0.50 INCHES.

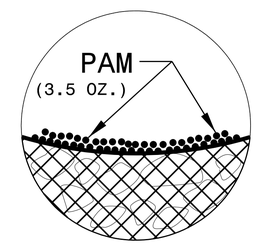

INSET A

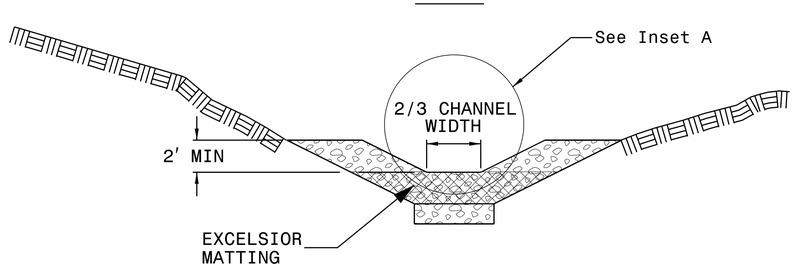

SECTION A-A

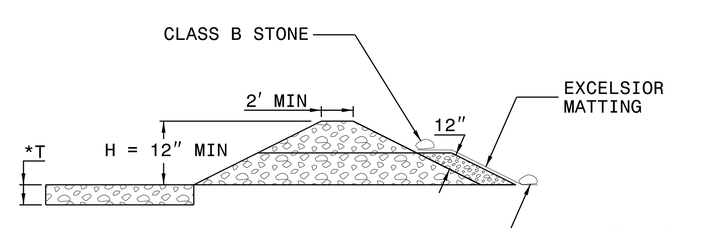

SECTION B-B

*T = 12" MIN., 18" MAX.

NOT TO SCALE

K:\RAL_Roadway\01\036/93 - 400338\Roadway\Proj\400338_rdy_ero_psh_2&3.dgn

6/19/2015

PROJECT REFERENCE NO.	SHEET NO.
17BP.7.R.33	EC-2A

WATTLE WITH POLYACRYLAMIDE (PAM) DETAIL

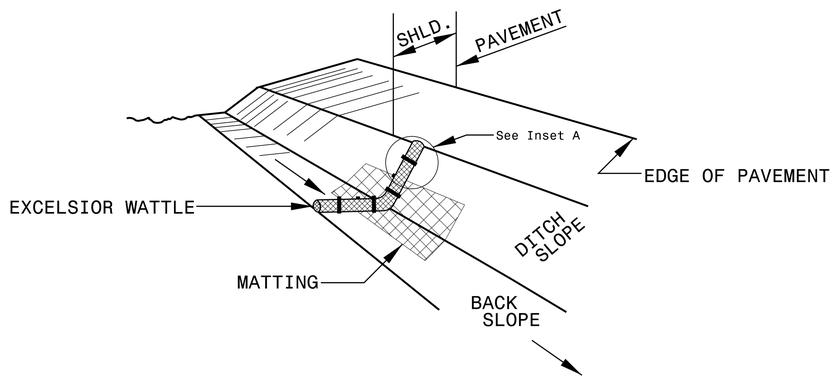

ISOMETRIC VIEW

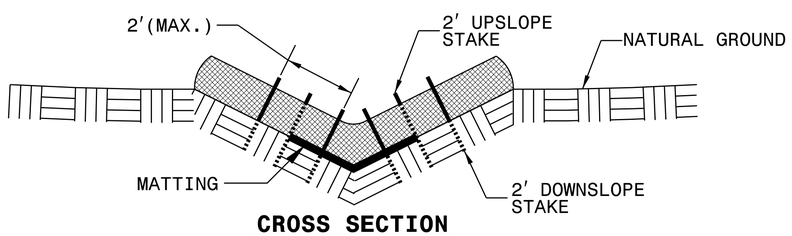

CROSS SECTION VEE DITCH

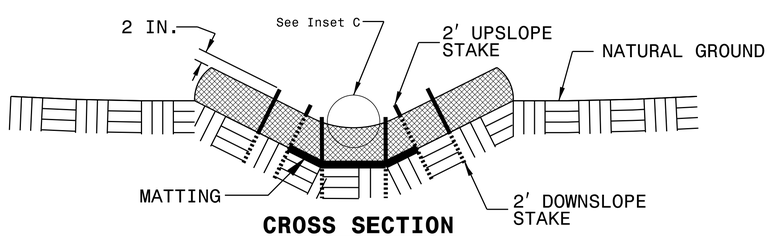

CROSS SECTION TRAPEZOIDAL DITCH

NOTES:

USE MINIMUM 12 IN. DIAMETER EXCELSIOR WATTLE.

USE 2 FT. WOODEN STAKES WITH A 2 IN. BY 2 IN. NOMINAL CROSS SECTION.

ONLY INSTALL WATTLE(S) TO A HEIGHT IN DITCH SO FLOW WILL NOT WASH AROUND WATTLE AND SCOUR DITCH SLOPES AND AS DIRECTED.

INSTALL A MINIMUM OF 2 UPSLOPE STAKES AND 4 DOWNSLOPE STAKES AT AN ANGLE TO WEDGE WATTLE TO BOTTOM OF DITCH.

PROVIDE STAPLES MADE OF 0.125 IN. DIAMETER STEEL WIRE FORMED INTO A U SHAPE NOT LESS THAN 12" IN LENGTH.

INSTALL STAPLES APPROXIMATELY EVERY 1 LINEAR FOOT ON BOTH SIDES OF WATTLE AND AT EACH END TO SECURE IT TO THE SOIL.

INSTALL MATTING IN ACCORDANCE WITH SECTION 1631 OF THE STANDARD SPECIFICATIONS.

PRIOR TO POLYACRYLAMIDE (PAM) APPLICATION, OBTAIN A SOIL SAMPLE FROM PROJECT LOCATION, AND FROM OFFSITE MATERIAL, AND ANALYZE FOR APPROPRIATE PAM FLOCCULANT TO BE APPLIED TO EACH WATTLE.

INITIALLY APPLY 2 OUNCES OF ANIONIC OR NEUTRALLY CHARGED PAM OVER WATTLE WHERE WATER WILL FLOW AND 1 OUNCE OF PAM ON MATTING ON EACH SIDE OF WATTLE. REAPPLY PAM AFTER EVERY RAINFALL EVENT THAT IS EQUAL TO OR EXCEEDS 0.50 IN.

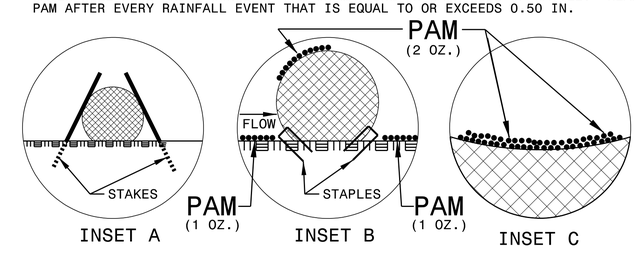

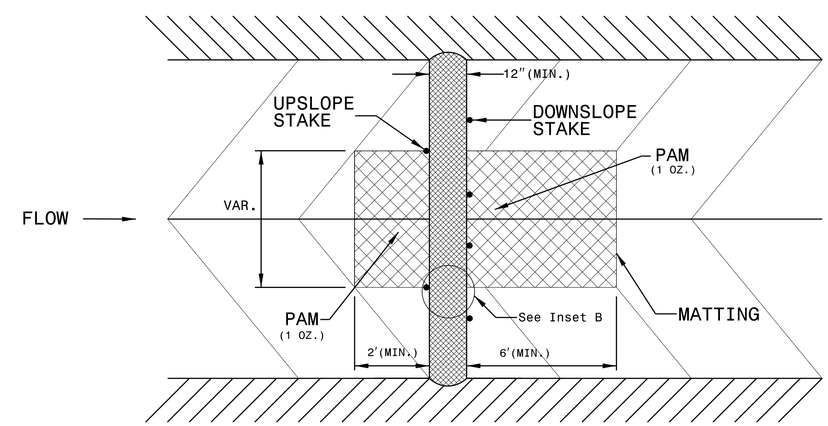

TOP VIEW

K:\RAL_Roadway\011036193 - 400338\Roadway\Proj\400338_rdy_ero_psh_2&3.dgn

6/19/2015

PROJECT REFERENCE NO.	SHEET NO.
17BP.7.R.33	EC-3

DIVISION OF HIGHWAYS
STATE OF NORTH CAROLINA

SOIL STABILIZATION SUMMARY SHEET

MATTING FOR EROSION CONTROL

CONST SHEET NO.	LINE	FROM STATION	TO STATION	SIDE	ESTIMATE (SY)

PERMANENT SOIL REINFORCEMENT MAT

CONST SHEET NO.	LINE	FROM STATION	TO STATION	SIDE	ESTIMATE (SY)
4	-L-	10+50	11+15	LT	45
4	-L-	11+00	12+06	RT	75
4	-L-	11+38	11+70	LT	25
4	-L-	12+06	12+26	RT	15
4	-L-	12+26	12+40	RT	10
4	-L-	12+70	13+00	RT	20
4	-L-	13+00	13+20	RT	15
4	-L-	13+20	15+00	RT	125
				SUBTOTAL	330
		ADDITIONAL PSRM TO BE INSTALLED			0
				TOTAL	330
				SAY	330

K:\RAL_Roadway\01I036193 - 400338\Roadway\Proj\400338_rdy_ero_psh_2&3.dgn

6/19/2015

DIVISION OF HIGHWAYS
STATE OF NORTH CAROLINA

SOIL STABILIZATION TIMEFRAMES

SITE DESCRIPTION	STABILIZATION TIME	TIMEFRAME EXCEPTIONS
PERIMETER DIKES, SWALES, DITCHES AND SLOPES	7 DAYS	NONE
HIGH QUALITY WATER (HQW) ZONES	7 DAYS	NONE
SLOPES STEEPER THAN 3:1	7 DAYS	IF SLOPES ARE 10' OR LESS IN LENGTH AND ARE NOT STEEPER THAN 2:1, 14 DAYS ARE ALLOWED.
SLOPES 3:1 OR FLATTER	14 DAYS	7 DAYS FOR SLOPES GREATER THAN 50' IN LENGTH.
ALL OTHER AREAS WITH SLOPES FLATTER THAN 4:1	14 DAYS	NONE, EXCEPT FOR PERIMETERS AND HQW ZONES.

K:\RAL_Roadway\01\036193 - 400338\Roadway\Proj\400338_rdy_ero_psh_2&3.dgn
6/19/2015

EROSION CONTROL PLAN

PROJECT REFERENCE NO.	SHEET NO.
17BP.7.R.33	EC-4/CONST.4
R/W SHEET NO.	
ROADWAY DESIGN ENGINEER	

Kimley-Horn and Associates, Inc.

P.O. BOX 33068
RALEIGH, N.C. 27636-3068

RIGHT-OF-WAY REV.

CONST. REV.

REVISIONS

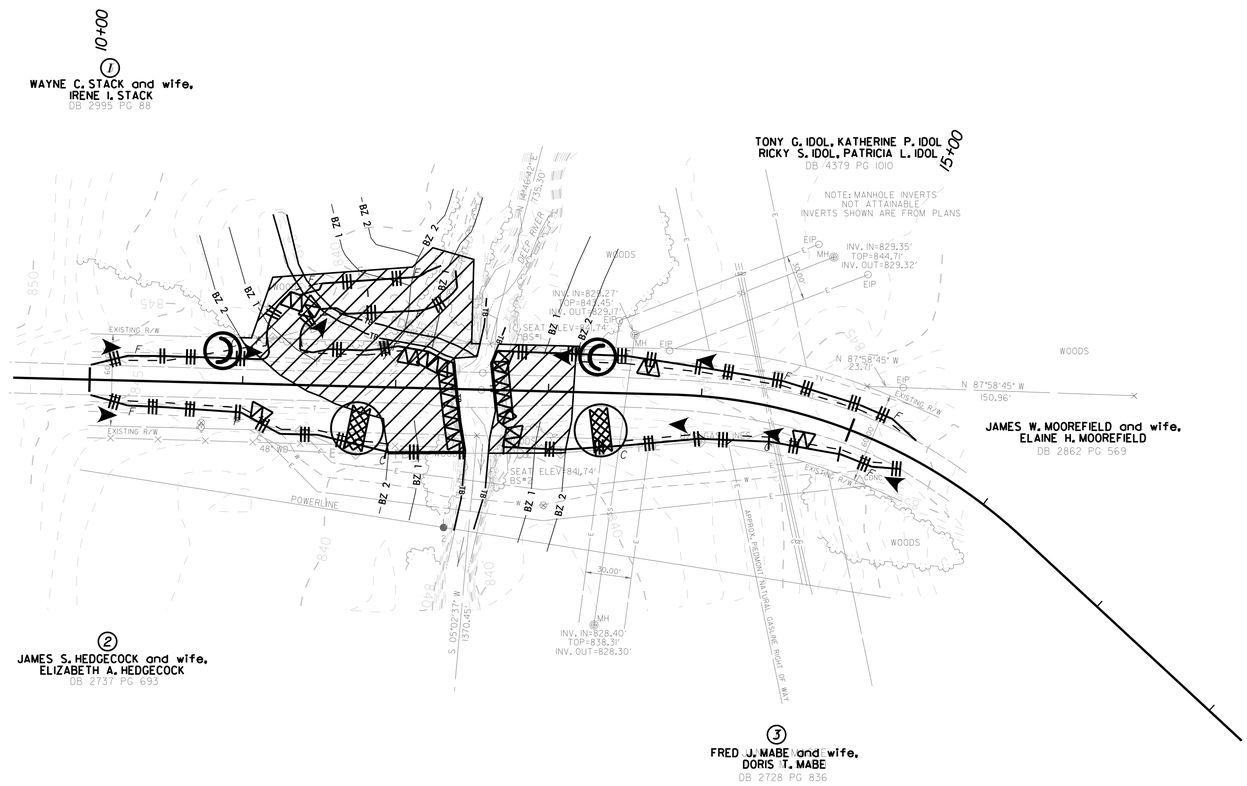

CLEARING AND GRUBBING
EROSION CONTROL FOR
CONSTRUCTION SHEET 4

NOTE: UTILIZE SPECIAL STILLING BASIN(S) WHERE APPLICABLE

NOTES: ANY DEVIATION FROM OPTIONS GIVEN WILL REQUIRE PRIOR APPROVAL BY ENGINEER.

ADDITIONAL EROSION CONTROL DEVICES MAY NEED TO BE INSTALLED AS DIRECTED BY THE ENGINEER.

ENVIRONMENTALLY SENSITIVE AREA
SEE PROJECT SPECIAL PROVISIONS

K:\RAL_Roadway\01\036193 - 400338\Roadway\Proj\400338_rdy_ero_psh_04.dgn

6/19/2015

EROSION CONTROL PLAN

PROJECT REFERENCE NO.	SHEET NO.
17BP.7.R.33	EC-5/CONST.4
R/W SHEET NO.	
ROADWAY DESIGN ENGINEER	

Kimley-Horn and Associates, Inc.

P.O. BOX 33068
RALEIGH, N.C. 27636-3068

RIGHT-OF-WAY REV.

CONST. REV.

REVISIONS

NC GRID NAD 83/NSRS 2007

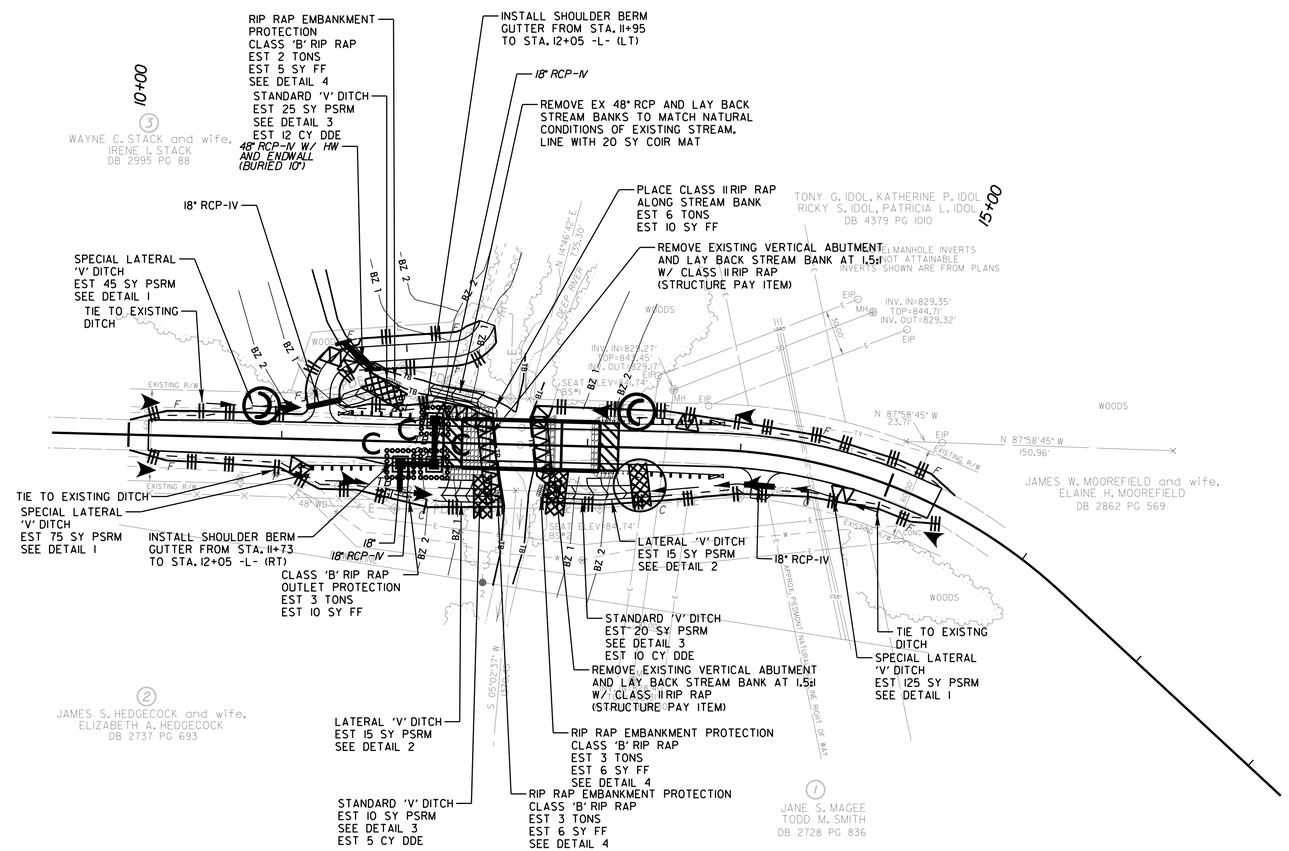

DETAIL 1
SPECIAL LATERAL 'V' DITCH
(Not to Scale)

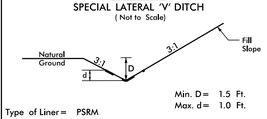

Min. D= 1.5 Ft.
Max. d= 1.0 Ft.

Type of Liner= PSRM

FROM STA. 10+50 TO STA. 11+15 -L- (LT)
FROM STA. 11+00 TO STA. 12+06 -L- (RT)
FROM STA. 13+20 TO STA. 15+00 -L- (RT)

DETAIL 2
LATERAL 'V' DITCH
(Not to Scale)

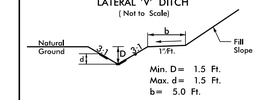

Min. D= 1.5 Ft.
Max. d= 1.5 Ft.
b= 5.0 Ft.

Type of Liner= PSRM

FROM STA. 12+06 TO STA. 12+26 -L- (RT)
FROM STA. 13+00 TO STA. 13+20 -L- (RT)

DETAIL 3
STANDARD 'V' DITCH
(Not to Scale)

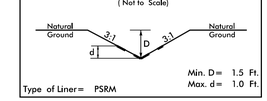

Min. D= 1.5 Ft.
Max. d= 1.0 Ft.

Type of Liner= PSRM

FROM STA. 11+38 TO STA. 11+70 -L- (LT)
FROM STA. 12+26 TO STA. 12+40 -L- (RT)
FROM STA. 12+70 TO STA. 13+00 -L- (RT)

DETAIL 4
RIP RAP AT EMBANKMENT
(Not to Scale)

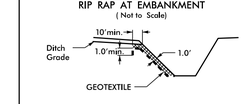

Type of Liner= CL 'B' Rip-Rap

STA. 11+70 -L- (LT)
STA. 12+40 -L- (RT)
STA. 12+70 -L- (RT)

NOTE: UTILIZE SPECIAL STILLING BASIN(S) WHERE APPLICABLE

NOTES: ANY DEVIATION FROM OPTIONS GIVEN WILL REQUIRE PRIOR APPROVAL BY ENGINEER.

ADDITIONAL EROSION CONTROL DEVICES MAY NEED TO BE INSTALLED AS DIRECTED BY THE ENGINEER.

PLANTING DETAILS

SEEDLING / LINER BAREROOT PLANTING DETAIL

HEALING IN

1. Locate a healing-in site in a shady, well protected area.
2. Excavate a flat bottom trench 12 inches deep and provide drainage.

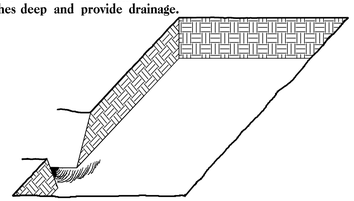

3. Backfill the trench with 2 inches well rotted sawdust. Place a 2 inch layer of well rotted sawdust at a sloping angle at one end of the trench.

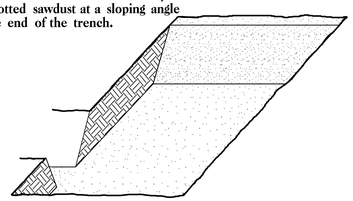

4. Place a single layer of plants against the sloping end so that the root collar is at ground level.

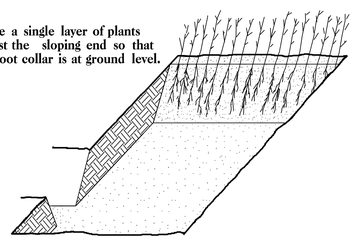

5. Place a 2 inch layer of well rotted sawdust over the roots maintaining a sloping angle.

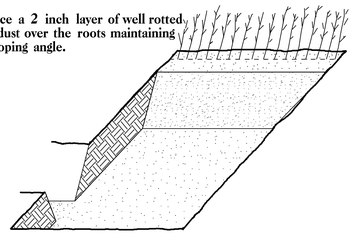

6. Repeat layers of plants and sawdust as necessary and water thoroughly.

DIBBLE PLANTING METHOD
USING THE KBC PLANTING BAR

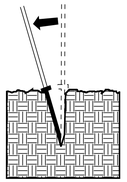

1. Insert planting bar as shown and pull handle toward planter.

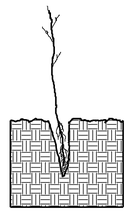

2. Remove planting bar and place seedling at correct depth.

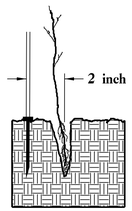

3. Insert planting bar 2 inches toward planter from seedling.

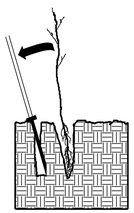

4. Pull handle of bar toward planter, firming soil at bottom.

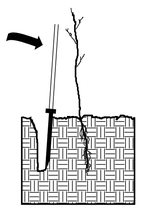

5. Push handle forward firming soil at top.

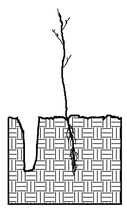

6. Leave compaction hole open. Water thoroughly.

PLANTING NOTES:

PLANTING BAG
During planting, seedlings shall be kept in a moist canvas bag or similar container to prevent the root systems from drying.

KBC PLANTING BAR
Planting bar shall have a blade with a triangular cross section, and shall be 12 inches long, 4 inches wide and 1 inch thick at center.

ROOT PRUNING
All seedlings shall be root pruned, if necessary, so that no roots extend more than 10 inches below the root collar.

REFORESTATION

☐ TREE REFORESTATION SHALL BE PLANTED 6 FT. TO 10 FT. ON CENTER, RANDOM SPACING, AVERAGING 8 FT. ON CENTER, APPROXIMATELY 680 PLANTS PER ACRE.

REFORESTATION

MIXTURE, TYPE, SIZE, AND FURNISH SHALL CONFORM TO THE FOLLOWING:

25%	LIRIODENDRON TULIPIFERA	TULIP POPLAR	12in - 18in BR
25%	PLATANUS OCCIDENTALIS	SYCAMORE	12in - 18in BR
25%	FRAXINUS PENNSYLVANICA	GREEN ASH	12in - 18in BR
25%	BETULA NIGRA	RIVER BIRCH	12in - 18in BR

REFORESTATION DETAIL SHEET

N.C.D.O.T. - ROADSIDE ENVIRONMENTAL UNIT

K:\RAL_Roadway\011036193 - 400338\Roadway\Proj\400338_rdy_rf_1.dgn
6/19/2015

09/08/99

TIP PROJECT: 17BP.7.R.33

T.I.P. NO.	SHEET NO.
17BP.7.R.33	UO-1

STATE OF NORTH CAROLINA
DIVISION OF HIGHWAYS

UTILITIES BY OTHERS PLANS
GUILFORD COUNTY

LOCATION: BRIDGE NO. 338 OVER MEARS FORK CREEK ON SR 2321

TYPE OF WORK: UTILITY BY OTHERS RELOCATION

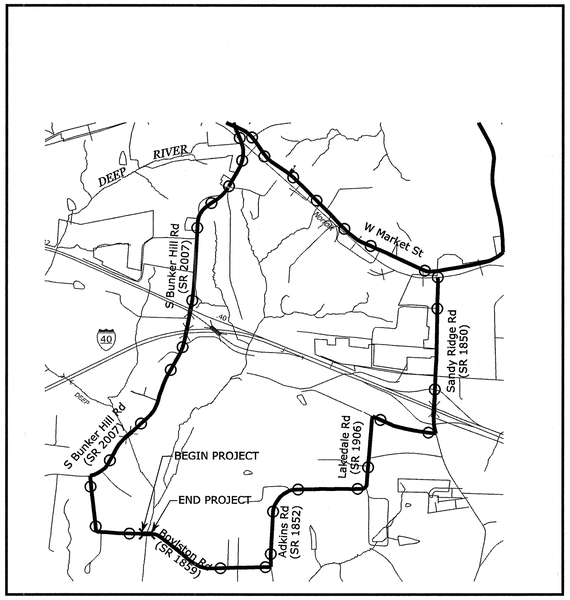

NC GRID
NAD 83/NSRS 2007

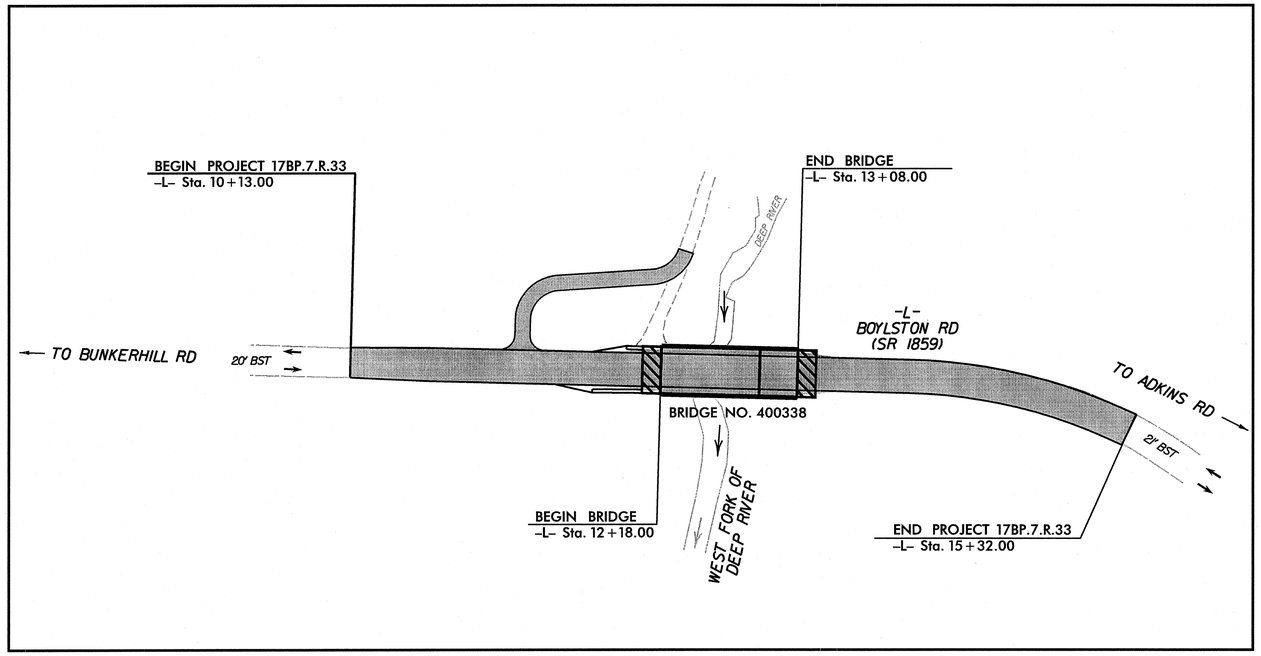

GRAPHIC SCALES

50 25 0 50 100
PLANS

50 25 0 50 100
PROFILE (HORIZONTAL)

10 5 0 10 20
PROFILE (VERTICAL)

INDEX OF SHEETS

SHEET NO.	*DESCRIPTION*
UO-1	*TITLE SHEET*
UO-2	*UTILITY BY OTHERS PLAN SHEETS*

UTILITY OWNERS ON PROJECT

(1) AT&T (PHONE)
(2) TIME WARNER (CABLE)

UTILITY PLANS BY:
MA Engineering CONSULTANTS, INC.
598 East Chatham Street Suite 137 Cary, NC 27511
Phone: 919 297 0220 Fax: 919 297 0221

NCDOT PROJECT ENGINEER:
TIM POWERS, P.E.
PREPARED FOR:
NORTH CAROLINA
DEPARTMENT OF TRANSPORTATION
DIVISION BRIDGE PROGRAM
DIVISION 7

$$$$SYSTIME$$$$
$$$$DGN$$$$
$$$$USERNAME$$$$

PROJECT REFERENCE NO.	SHEET NO.
17BP.7.R.33	UO-2

UTILITIES BY OTHERS

NOTE:
ALL PROPOSED UTILITY WORK SHOWN ON THIS SHEET WILL BE DONE BY OTHERS

MA Engineering CONSULTANTS, INC.
598 E. Chatham Street, Suite 137
Cary, N. C. 27511

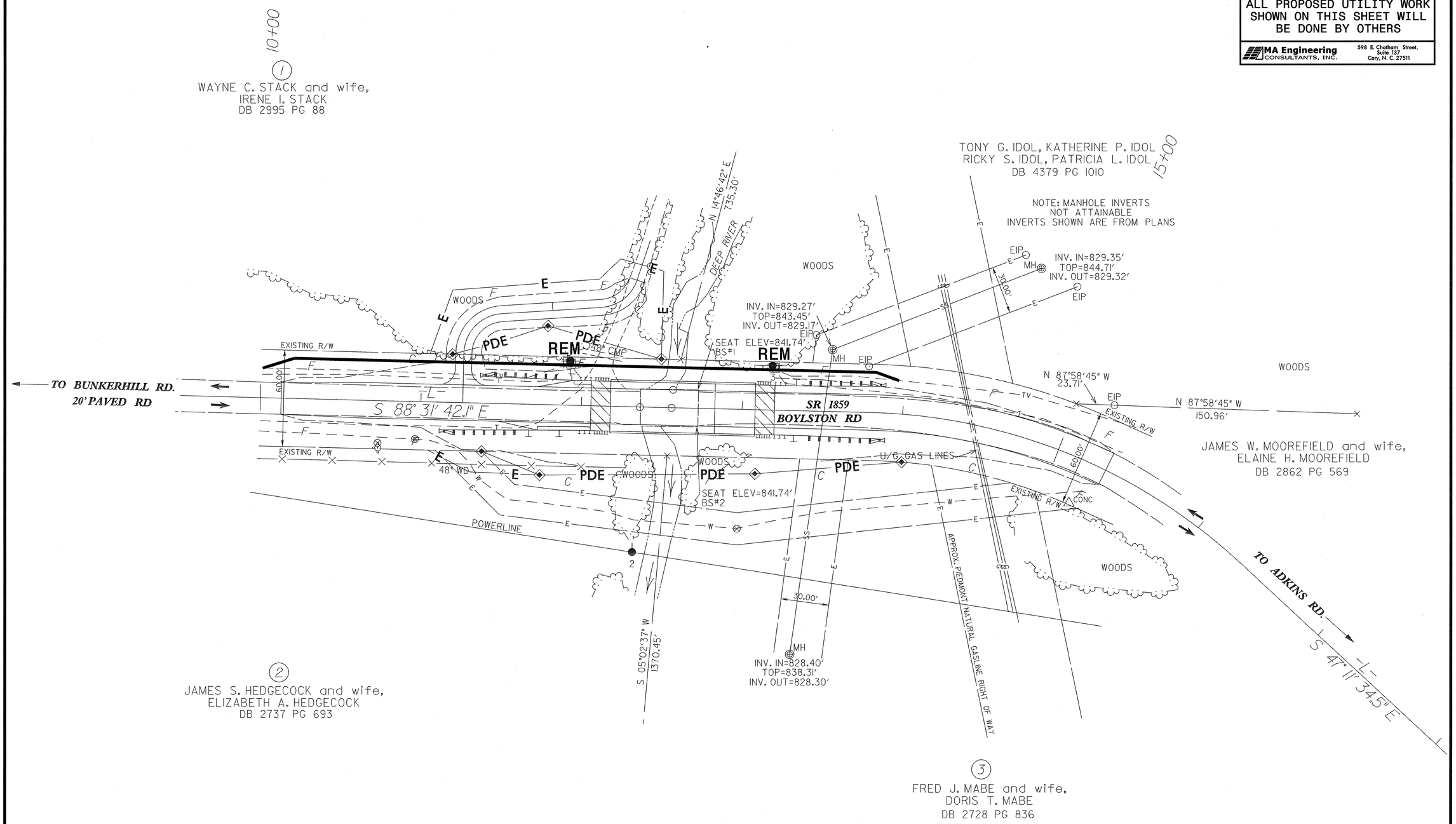

5/14/99

0 5 10	PROJ. REFERENCE NO.	SHEET NO.
	17BP.7.R.33	X-1

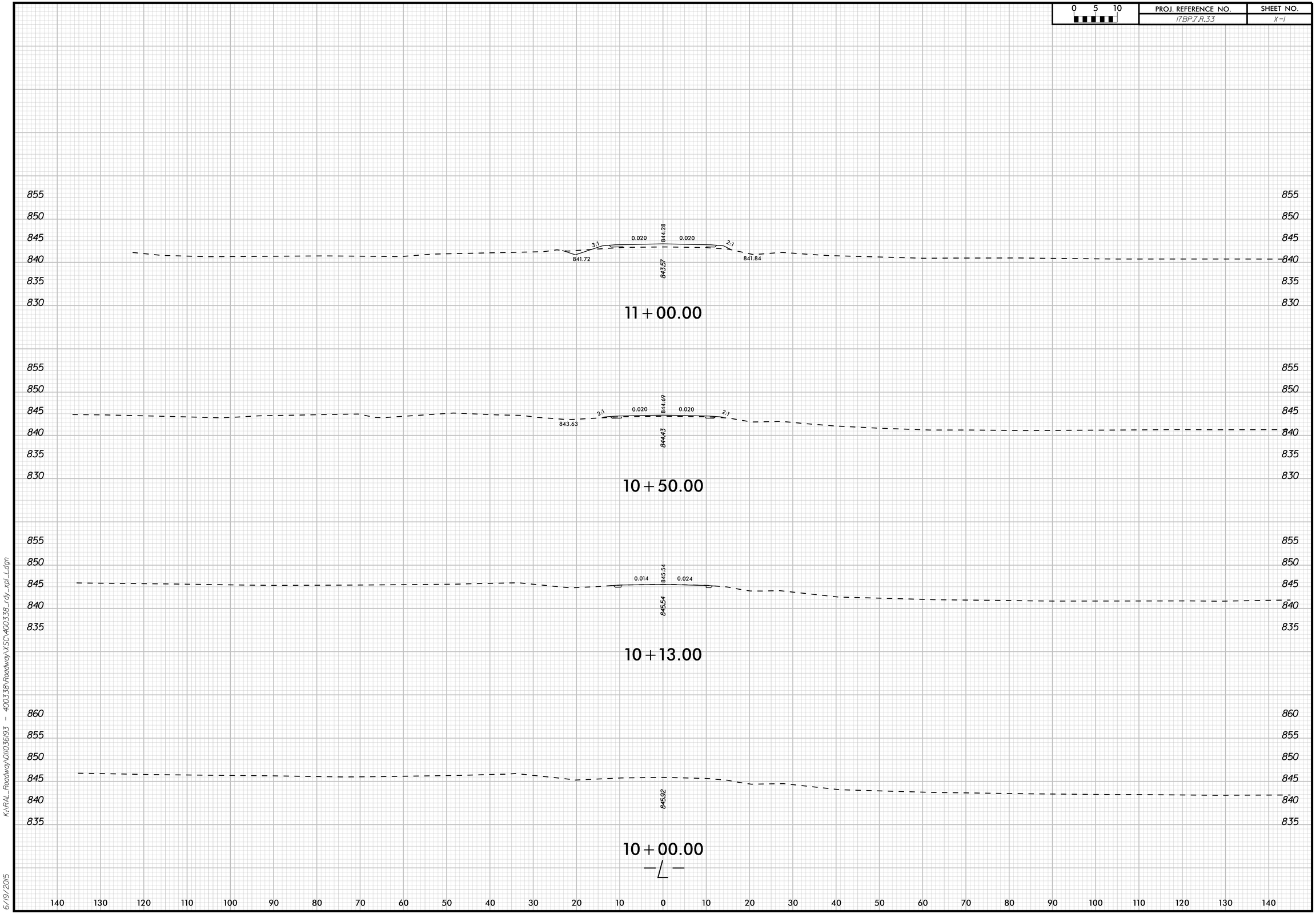

K:\RAL_Roadway\01\036193 - 400338\Roadway\XSC\400338_rdy_xpl_L.dgn

6/19/2015

0 5 10	PROJ. REFERENCE NO.	SHEET NO.
	17BP.7.R.33	X-2

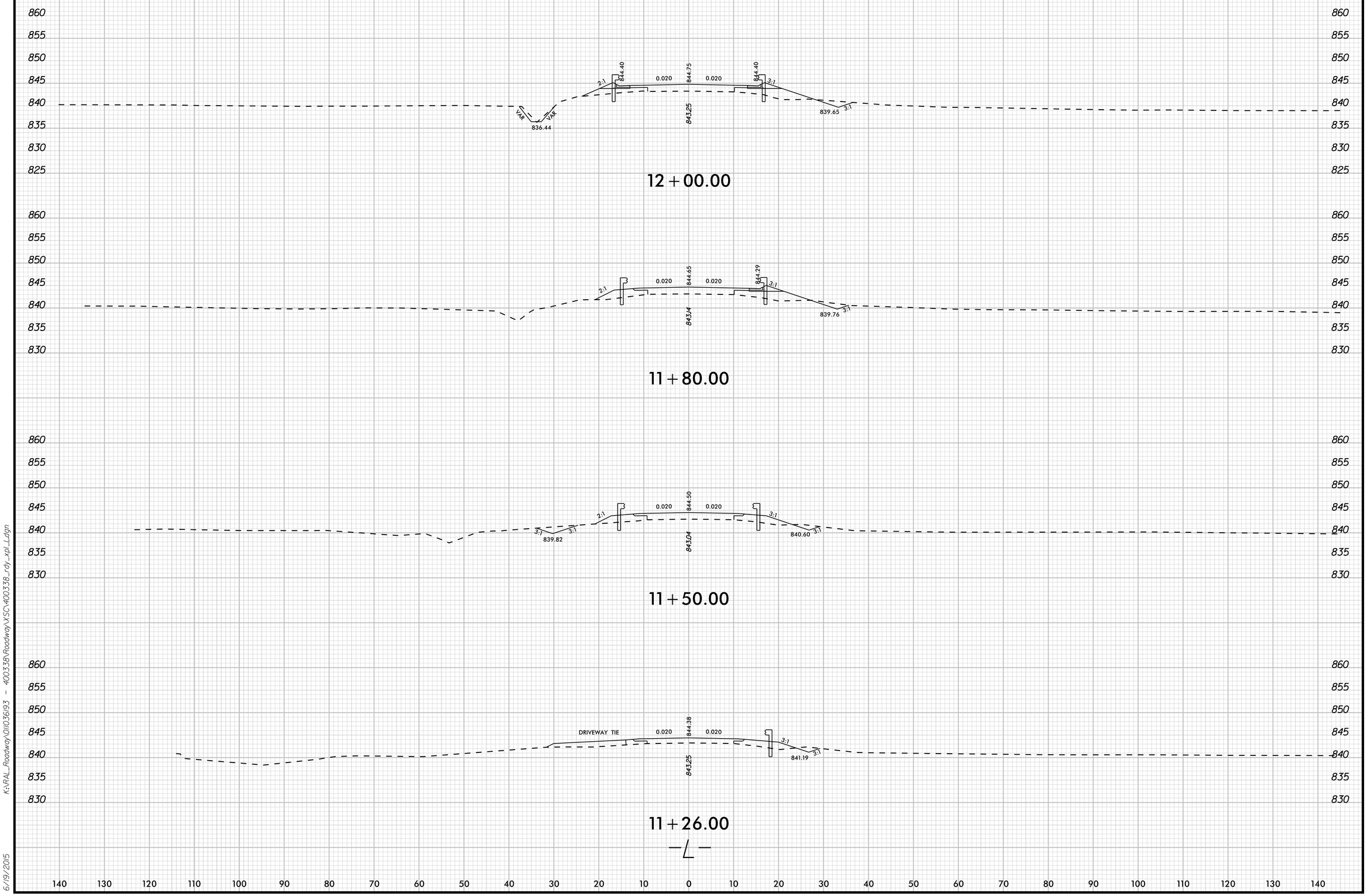

K:\RAL_Roadway\011036193 - 400338\Roadway\XSC\400338_rdy_xpl_Lagn

6/19/2015

0 5 10	PROJ. REFERENCE NO.	SHEET NO.
	17BP.7.R.33	X-3

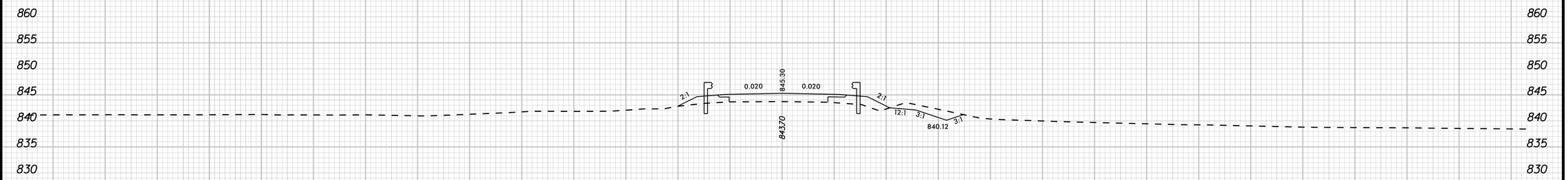

13+09.19

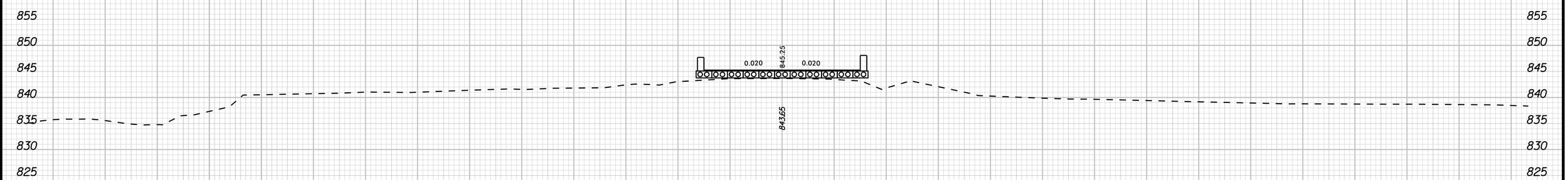

13+00.00

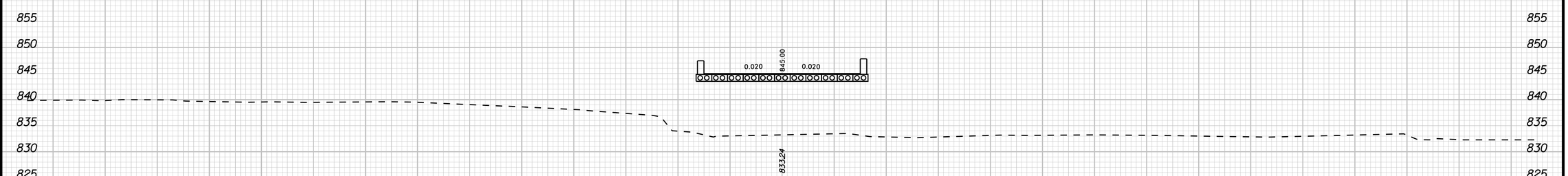

12+50.00

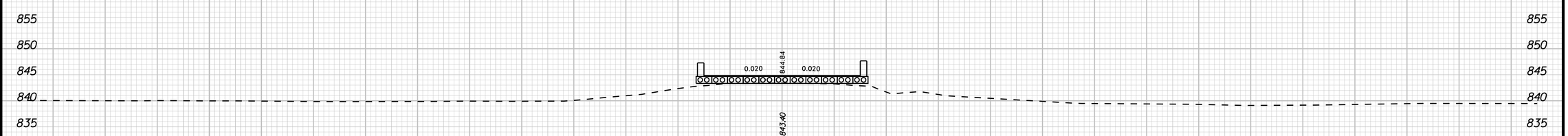

12+16.81

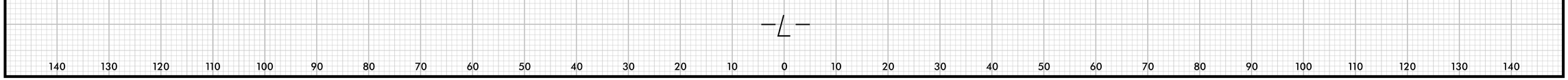

K:\RAL_Roadway\01\036193 - 400338\Roadway\XSC\400338_rdy_xpl_L.dgn

6/19/2015

0 5 10	PROJ. REFERENCE NO.	SHEET NO.
	17BP.7.R.33	X-4

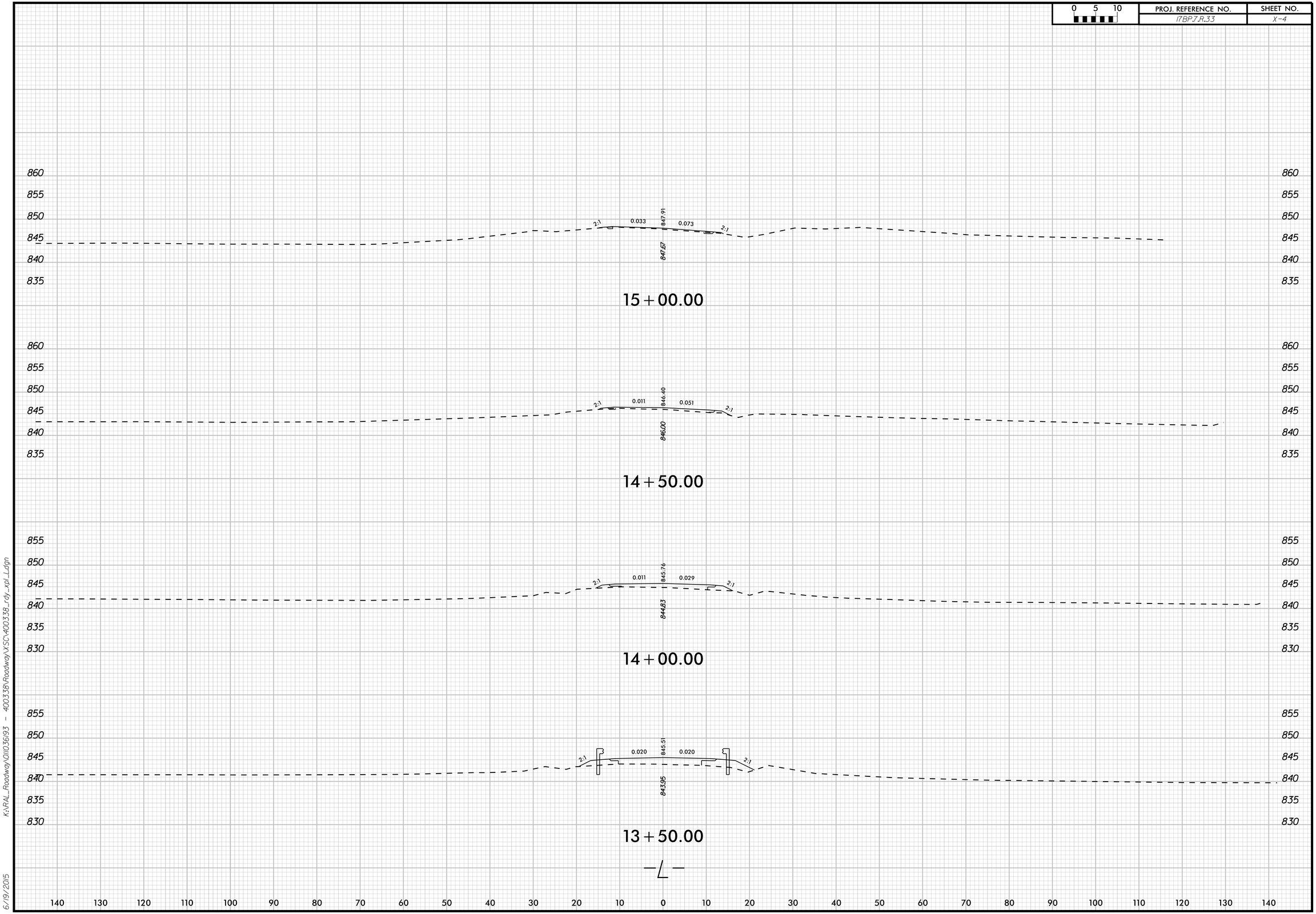

K:\RAL_Roadway\01\036193 - 400338\Roadway\XSC\400338_rdy_xpl_L.dgn

6/19/2015

0 5 10	PROJ. REFERENCE NO.	SHEET NO.
	17BP.7.R.33	X-5

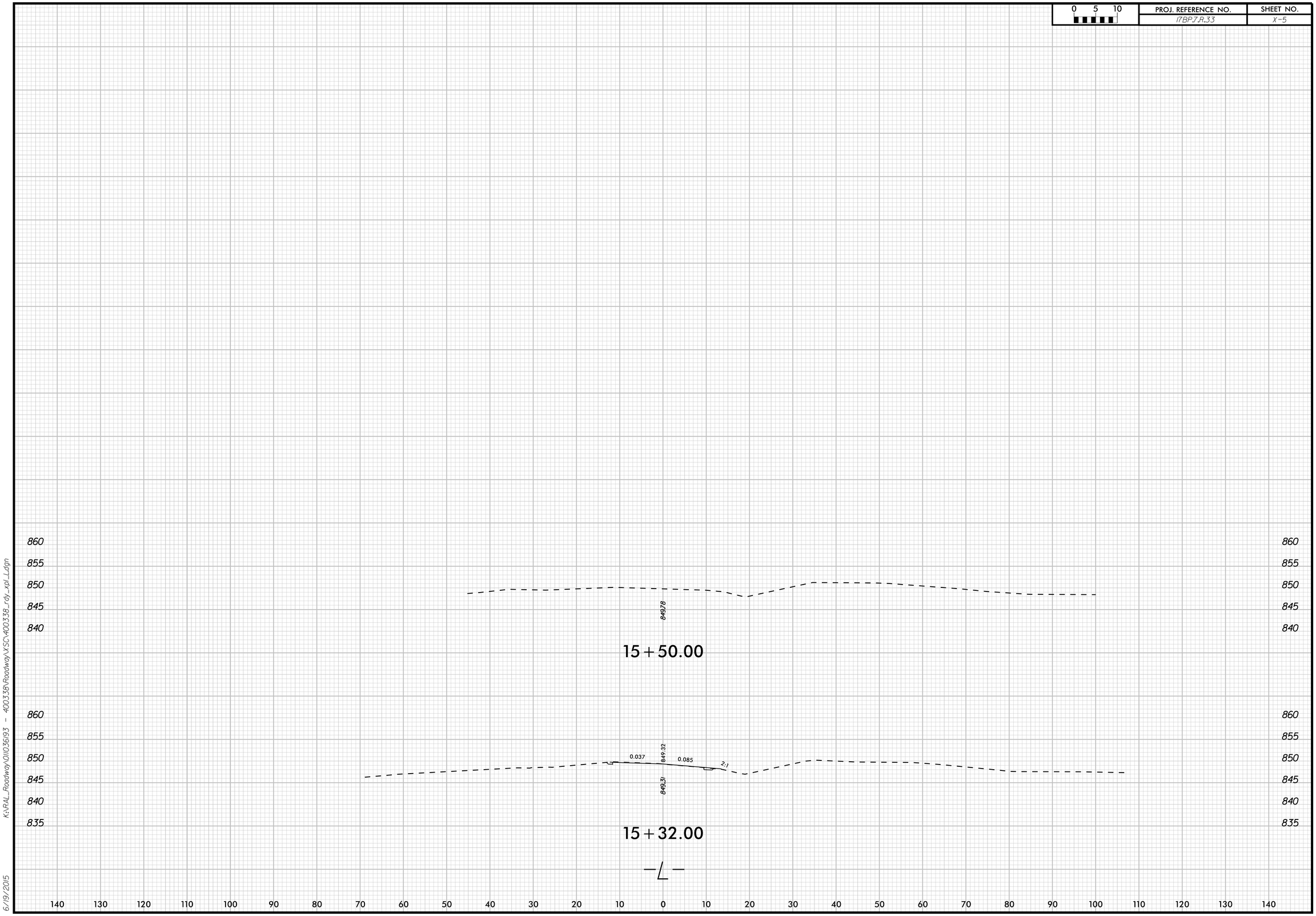

K:\RAL_Roadway\011036193 - 400338\Roadway\XSC\400338_rdy_xpl_L.dgn

6/19/2015

DocuSign Envelope ID: 31119006-74F2-42F7-A98A-E2761043138F

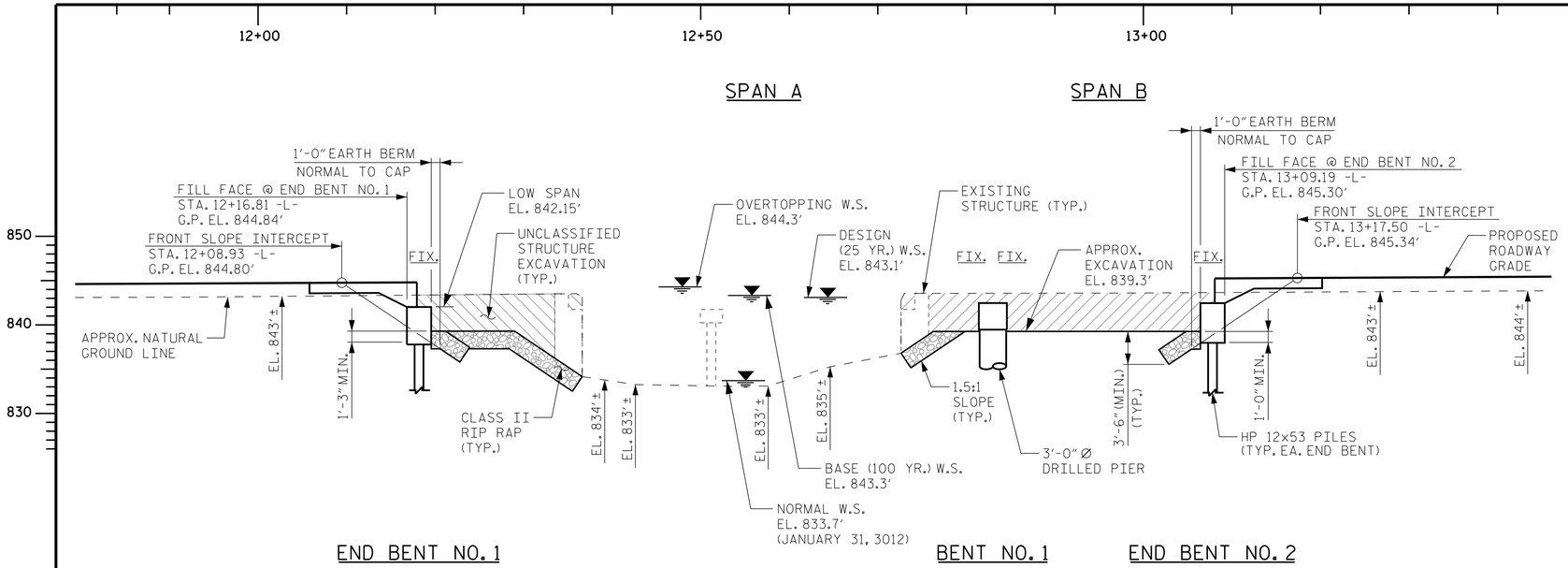

SECTION ALONG -L-

(-)2.9400% (+)0.5000% (+)4.9692%

-L- VERTICAL CURVE DATA

PVI STA. = 10+63.00
EL. = 844.07'
VC = 100'

PVI STA. = 14+67.00
EL. = 846.09'
VC = 130'

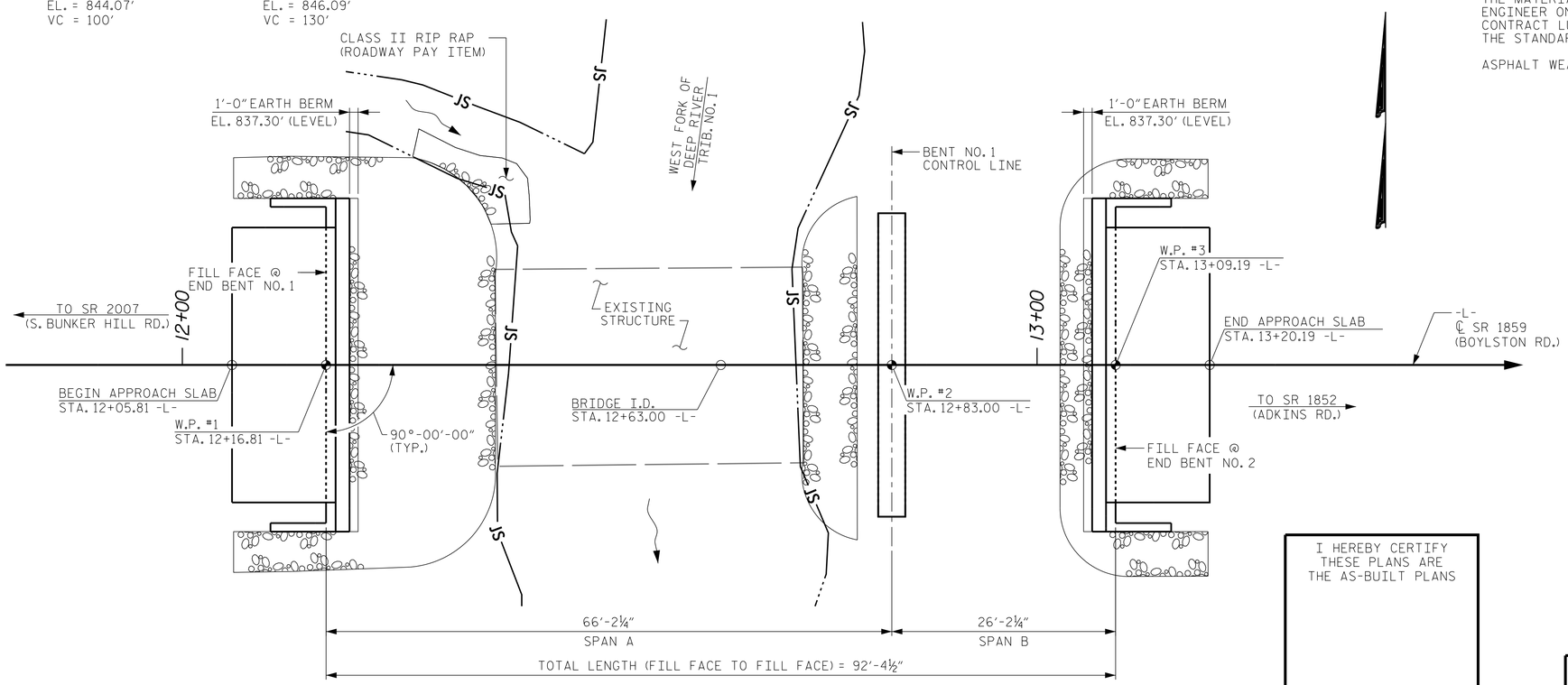

PLAN

(PILES AND DRILLED PIERS NOT SHOWN IN PLAN VIEW.)

NOTES

THIS BRIDGE HAS BEEN DESIGNED IN ACCORDANCE WITH THE REQUIREMENTS OF THE AASHTO LRFD BRIDGE DESIGN SPECIFICATIONS.

ASSUMED LIVE LOAD = HL-93 OR ALTERNATE LOADING.

THIS BRIDGE IS LOCATED IN SEISMIC ZONE 1.

FOR OTHER DESIGN DATA AND GENERAL NOTES, SEE SHEET SN.

FOR EROSION CONTROL MEASURES, SEE EROSION CONTROL PLANS.

FOR UTILITY INFORMATION, SEE UTILITY PLANS AND SPECIAL PROVISIONS.

FOR ADDITIONAL INFORMATION REGARDING DRAINAGE, GRADING, AND ROADWAY, SEE ROADWAY PLANS.

THIS STRUCTURE HAS BEEN DESIGNED IN ACCORDANCE WITH "HEC 18-EVALUATING SCOUR AT BRIDGES".

FOR CRANE SAFETY, SEE SPECIAL PROVISIONS.

FOR FALSEWORK AND FORMWORK, SEE SPECIAL PROVISIONS.

FOR GROUT FOR STRUCTURES, SEE SPECIAL PROVISIONS.

FOR SUBMITTAL OF WORKING DRAWINGS, SEE SPECIAL PROVISIONS.

THE EXISTING STRUCTURE CONSISTING OF (2) SPANS OF 18'-0" WITH TIMBER DECK AND STEEL GIRDERS, AND A CLEAR ROADWAY WIDTH OF 23' ON TIMBER PILES AND TIMBER BENTS TO BE REPLACED, IN PLACE, WITH THE PROPOSED STRUCTURE. THE EXISTING BRIDGE IS PRESENTLY POSTED BELOW THE LEGAL LIMIT. SHOULD THE STRUCTURAL INTEGRITY OF THE BRIDGE FURTHER DETERIORATE, THIS LOAD LIMITATION MAY BE REDUCED AS FOUND NECESSARY.

REMOVAL OF THE EXISTING BRIDGE SHALL BE PERFORMED SO AS NOT TO ALLOW DEBRIS TO FALL INTO THE WATER. THE CONTRACTOR SHALL REMOVE THE BRIDGE AND SUBMIT PLANS FOR THE DEMOLITION IN ACCORDANCE WITH ARTICLE 402-2 OF THE STANDARD SPECIFICATIONS.

THE SUBSTRUCTURE OF THE EXISTING BRIDGE INDICATED ON THE PLANS IS FROM THE BEST INFORMATION AVAILABLE. SINCE THIS INFORMATION IS SHOWN FOR THE CONVENIENCE OF THE CONTRACTOR, THE CONTRACTOR SHALL HAVE NO CLAIM WHATSOEVER AGAINST THE DEPARTMENT OF TRANSPORTATION FOR ANY DELAYS OR ADDITIONAL COST INCURRED BASED ON DIFFERENCES BETWEEN THE EXISTING BRIDGE SUBSTRUCTURE SHOW ON THE PLANS AND THE ACTUAL CONDITIONS AT THE PROJECT SITE. CUTTING OFF THE EXISTING PILES BELOW THE PROPOSED FINISHED GRADE WILL BE REQUIRED.

THE MATERIAL SHOWN IN THE CROSS-HATCHED AREA SHALL BE EXCAVATED AS DIRECTED BY THE ENGINEER ON THE ROADWAY AND STRUCTURES PLANS. THIS WORK WILL BE PAID FOR AT THE CONTRACT LUMP SUM PRICE FOR UNCLASSIFIED STRUCTURE EXCAVATION. SEE SECTION 412 OF THE STANDARD SPECIFICATIONS.

ASPHALT WEARING SURFACE IS INCLUDED IN ROADWAY QUANTITY ON ROADWAY PLANS.

HYDRAULIC DATA

DESIGN DISCHARGE	2,300 CFS
FREQUENCY OF DESIGN FLOOD	25 YR.
DESIGN HIGH WATER ELEVATION	843.1 FT.
DRAINAGE AREA	4.40 SQ. MI.
BASE DISCHARGE (0100)	2,900 CFS
BASE HIGH WATER ELEVATION	843.32 FT.

OVERTOPPING FLOOD DATA

OVERTOPPING DISCHARGE	3,700 CFS
FREQUENCY OF OVERTOPPING FLOOD	>100 YR.
OVERTOPPING FLOOD ELEVATION	844.28 FT.

PROJECT NO. 17BP.7.R.33
GUILFORD COUNTY
STATION: 12+63.00 -L-

SHEET 1 OF 2 REPLACES BRIDGE #400338

I HEREBY CERTIFY THESE PLANS ARE THE AS-BUILT PLANS

NORTH CAROLINA PROFESSIONAL SEAL 035762 ENGINEER JOSEPH J. PICCIRILLI

DocuSigned by: Joseph J Piccirilli 6/15/2015
5181266EC16C433...

Kimley-Horn and Associates, Inc.
333 Fayetteville Street, Suite 600
Raleigh, NC 27601-1772
Phone (919) 677-2042
Fax (919) 653-5847
NC LICENSE # F-0102

This document, together with the concepts and designs presented herein, as an instrument of services, is intended only for the specific purpose and client for which it was prepared. Reuse of and improper reliance on this document without written authorization and adaption by Kimley-Horn and Associates, Inc. shall be without liability to Kimley-Horn and Associates, Inc.
Copyright Kimley-Horn and Associates, Inc., 2013

STATE OF NORTH CAROLINA
DEPARTMENT OF TRANSPORTATION
RALEIGH

GENERAL DRAWING
FOR BRIDGE OVER WEST FORK OF DEEP RIVER TRIBUTARY NO. 1 ON SR 1859 (BOYLSTON RD.)

REVISIONS							SHEET NO.
NO.	BY:	DATE:	NO.	BY:	DATE:		S-1
1			3				TOTAL SHEETS
2			4				18

DRAWN BY: CRA DATE: 4/13
CHECKED BY: JCW DATE: 4/13

6/15/2015 K:\RDT_Structures_Bridge\NC\17BP Bridges - Group E\01036193.BR400338\Cad\dgn\S-1.dgn

DocuSign Envelope ID: 31119006-74F2-42F7-A98A-E2761043138F

BENCHMARK: BM #1 -L- STA. 15+13.34, OFFSET 43.82' RT, ELEV = 849.58', R/R SPIKE IN 24" POPLAR

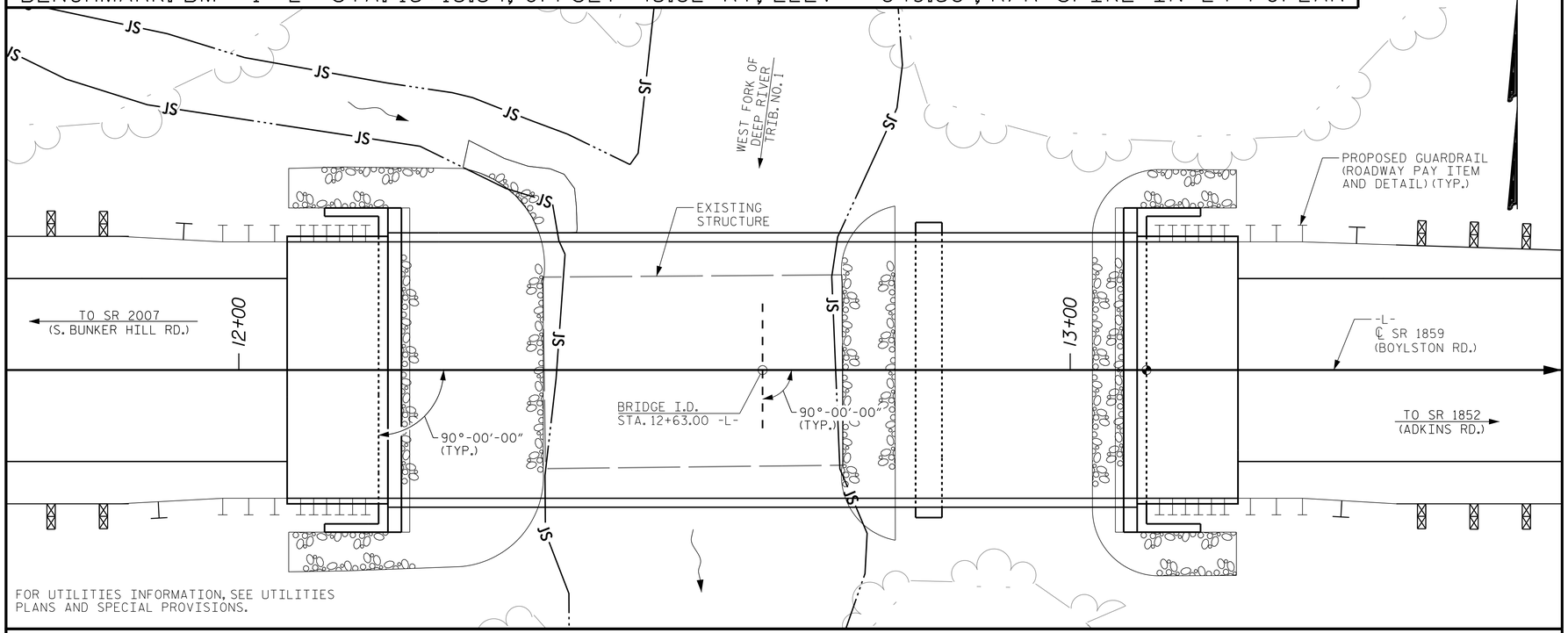

FOR UTILITIES INFORMATION, SEE UTILITIES PLANS AND SPECIAL PROVISIONS.

LOCATION SKETCH

NOTES

FOR PILES, SEE SECTION 450 OF THE STANDARD SPECIFICATIONS.

PILES AT END BENT NO. 1 ARE DESIGNED FOR A FACTORED RESISTANCE OF 80 TONS PER PILE.

PILES AT END BENT NO. 2 ARE DESIGNED FOR A FACTORED RESISTANCE OF 50 TONS PER PILE.

DRIVE PILES AT END BENT NO. 1 TO REQUIRED DRIVING RESISTANCE OF 135 TONS PER PILE.

DRIVE PILES AT END BENT NO. 2 TO REQUIRED DRIVING RESISTANCE OF 85 TONS PER PILE.

STEEL H-PILE POINTS ARE REQUIRED FOR STEEL H-PILES. FOR STEEL PILE POINTS, SEE SECTION 450 OF THE STANDARD SPECIFICATIONS.

FOR DRILLED PIERS, SEE SECTION 411 OF THE STANDARD SPECIFICATIONS.

DRILLED PIERS AT BENT NO. 1 ARE DESIGNED FOR A FACTORED RESISTANCE OF 360 TONS PER PIER. CHECK FIELD CONDITIONS FOR THE REQUIRED TIP RESISTANCE OF 115 TSF.

INSTALL DRILLED PIERS AT BENT NO. 1 TO A TIP ELEVATION NO HIGHER THAN 815 FEET FOR DRILLED PIER NOS. 1 & 2 (4 FEET INTO ROCK), AND 814 FEET FOR DRILLED PIER NO. 3 (1 FOOT INTO ROCK), WITH THE REQUIRED TIP RESISTANCE.

CSL TUBES ARE REQUIRED AND CSL TESTING MAY BE REQUIRED FOR DRILLED PIERS. THE ENGINEER WILL DETERMINE THE NEED FOR CSL TESTING. FOR CSL TESTING, SEE SECTION 411 OF THE STANDARD SPECIFICATIONS.

THE SCOUR CRITICAL ELEVATION FOR BENT NO. 1 IS ELEVATION 820.5 FEET AT DRILLED PIER NO. 1 AND 823 FEET AT DRILLED PIER NO. 3. SCOUR CRITICAL ELEVATIONS ARE USED TO MONITOR POSSIBLE SCOUR PROBLEMS DURING THE LIFE OF THE STRUCTURE.

TOTAL BILL OF MATERIALS

	REMOVAL OF EXISTING STRUCTURE @ STA. 12+63.00	FOUNDATION EXCAVATION FOR END BENT 1 & 2 @ STA. 12+63.00	UNCLASSIFIED STRUCTURE EXCAVATION @ STA. 12+63.00	3'-0" DIA. DRILLED PIERS IN SOIL	3'-0" DIA. DRILLED PIERS NOT IN SOIL	CROSSHOLE SONIC LOGGING	CLASS A CONCRETE	BRIDGE APPROACH SLABS	REINFORCING STEEL	SPIRAL COLUMN REINFORCING STEEL	HP 12x53 STEEL PILES		STEEL PILE POINTS	VERTICAL CONCRETE BARRIER RAIL	RIP RAP CLASS II (2'-0" THICK)	GEOTEXTILE FOR DRAINAGE	ELASTOMERIC BEARINGS	3'-0"x2'-0" PRESTRESSED CONCRETE CORED SLABS	
	LUMP SUM	LUMP SUM	LUMP SUM	LIN. FT.	LIN. FT.	EA.	C.Y.	LUMP SUM	LBS.	LBS.	NO.	LIN. FT.	EA.	LIN. FT.	TONS	S.Y.	LUMP SUM	NO.	LIN. FT.
SUPERSTRUCTURE								LUMP SUM						180.50			LUMP SUM	22	990
END BENT 1		LUMP SUM	LUMP SUM				21.8		2,645		7	210	7		125	135			
BENT 1				52	19	1	13.4		7,431	1,593					20	20			
END BENT 2		LUMP SUM	LUMP SUM				22.8		2,675		7	105	7		62	70			
TOTAL	LUMP SUM	LUMP SUM	LUMP SUM	52	19	1	58.0	LUMP SUM	12,751	1,593	14	315	14	180.50	207	225	LUMP SUM	22	990

PROJECT NO. 17BP.7.R.33

GUILFORD COUNTY

STATION: 12+63.00 -L-

SHEET 2 OF 2 REPLACES BRIDGE #400338

NORTH CAROLINA PROFESSIONAL SEAL 035762 ENGINEER JOSEPH J. PICCIRILLI

DocuSigned by: Joseph J Piccirilli 6/15/2015

518126BEC16C433

Kimley-Horn and Associates, Inc.
333 Fayetteville Street, Suite 600
Raleigh, NC 27601-1772
Phone (919) 677-2042
Fax (919) 653-5847
NC LICENSE # F-0102

This document, together with the concepts and designs presented herein, as an instrument of services, is intended only for the specific purpose and client for which it was prepared. Reuse of and improvements to this document without written authorization and adaption by Kimley-Horn and Associates, Inc. shall be without liability to Kimley-Horn and Associates, Inc.

Copyright Kimley-Horn and Associates, Inc., 2013

STATE OF NORTH CAROLINA
DEPARTMENT OF TRANSPORTATION
RALEIGH

GENERAL DRAWING
FOR BRIDGE OVER WEST FORK OF DEEP RIVER TRIBUTARY NO. 1 ON SR 1859 (BOYLSTON RD.)

REVISIONS						SHEET NO.
NO.	BY:	DATE:	NO.	BY:	DATE:	S-2
1			3			TOTAL SHEETS
2			4			18

DRAWN BY: CRA DATE: 4/13
CHECKED BY: JCW DATE: 4/13

6/15/2015 K:\RDT_Structures_Bridge\NC\17BP Bridges - Group EV011036193.BR400338\Cad\dgn\S-2.dgn

DocuSign Envelope ID: 31119006-74F2-42F7-A98A-E2761043138F

LOAD AND RESISTANCE FACTOR RATING (LRFD) SUMMARY FOR PRESTRESSED CONCRETE GIRDERS

LEVEL		VEHICLE	WEIGHT (W) (TONS)	CONTROLLING LOAD RATING	MINIMUM RATING FACTORS (RF)	TONS = W X RF	STRENGTH I LIMIT STATE											SERVICE III LIMIT STATE						COMMENT NUMBER
								MOMENT					SHEAR						MOMENT					
							LIVELOAD FACTORS	DISTRIBUTION FACTORS (DF)	RATING FACTOR	SPAN	GIRDER LOCATION	DISTANCE FROM LEFT END OF SPAN (ft)	DISTRIBUTION FACTORS (DF)	RATING FACTOR	SPAN	GIRDER LOCATION	DISTANCE FROM LEFT END OF SPAN (ft)	LIVELOAD FACTORS	DISTRIBUTION FACTORS (DF)	RATING FACTOR	SPAN	GIRDER LOCATION	DISTANCE FROM LEFT END OF SPAN (ft)	
DESIGN LOAD RATING		HL-93(Inv)	N/A	1	**1.018**	--	1.75	0.274	1.05	65'	EL	32	0.513	1.2	65'	EL	6.4	0.80	0.274	**1.02**	65'	EL	**32**	
		HL-93(Opr)	N/A	--	1.358	--	1.35	0.274	1.36	65'	EL	32	0.513	1.56	65'	EL	6.4	N/A	--	--	--	--	--	
		HS-20(Inv)	36.000	2	**1.306**	47.014	1.75	0.274	1.34	65'	EL	32	0.513	1.48	65'	EL	6.4	0.80	0.274	**1.31**	65'	EL	**32**	
		HS-20(Opr)	36.000	--	1.742	62.706	1.35	0.274	1.74	65'	EL	32	0.513	1.92	65'	EL	6.4	N/A	--	--	--	--	--	
LEGAL LOAD RATING	SV	SNSH	13.500	--	2.868	38.725	1.4	0.274	3.69	65'	EL	32	0.513	4.33	65'	EL	6.4	0.80	0.274	2.87	65'	EL	32	
		SNGARBS2	20.000	--	2.171	43.424	1.4	0.274	2.79	65'	EL	32	0.513	3.11	65'	EL	6.4	0.80	0.274	2.17	65'	EL	32	
		SNAGRIS2	22.000	--	2.071	45.552	1.4	0.274	2.66	65'	EL	32	0.513	2.89	65'	EL	6.4	0.80	0.274	2.07	65'	EL	32	
		SNCOTTS3	27.250	--	1.428	38.924	1.4	0.274	1.84	65'	EL	32	0.513	2.17	65'	EL	6.4	0.80	0.274	1.43	65'	EL	32	
		SNAGGRS4	34.925	--	1.206	42.136	1.4	0.274	1.55	65'	EL	32	0.513	1.81	65'	EL	6.4	0.80	0.274	1.21	65'	EL	32	
		SNS5A	35.550	--	1.179	41.911	1.4	0.274	1.52	65'	EL	32	0.513	1.85	65'	EL	6.4	0.80	0.274	1.18	65'	EL	32	
		SNS6A	39.950	--	1.087	43.43	1.4	0.274	1.4	65'	EL	32	0.513	1.69	65'	EL	6.4	0.80	0.274	1.09	65'	EL	32	
		SNS7B	42.000	--	1.035	43.489	1.4	0.274	1.33	65'	EL	32	0.513	1.67	65'	EL	6.4	0.80	0.274	1.04	65'	EL	32	
	TTST	TNAGRIT3	33.000	--	1.327	43.8	1.4	0.274	1.71	65'	EL	32	0.513	2.01	65'	EL	6.4	0.80	0.274	1.33	65'	EL	32	
		TNT4A	33.075	--	1.335	44.142	1.4	0.274	1.72	65'	EL	32	0.513	1.95	65'	EL	6.4	0.80	0.274	1.33	65'	EL	32	
		TNT6A	41.600	--	1.096	45.613	1.4	0.274	1.41	65'	EL	32	0.513	1.8	65'	EL	6.4	0.80	0.274	1.10	65'	EL	32	
		TNT7A	42.000	--	1.105	46.4	1.4	0.274	1.42	65'	EL	32	0.513	1.74	65'	EL	6.4	0.80	0.274	1.10	65'	EL	32	
		TNT7B	42.000	--	1.15	48.298	1.4	0.274	1.48	65'	EL	32	0.513	1.62	65'	EL	6.4	0.80	0.274	1.15	65'	EL	32	
		TNAGRIT4	43.000	--	1.089	46.815	1.4	0.274	1.4	65'	EL	32	0.513	1.57	65'	EL	6.4	0.80	0.274	1.09	65'	EL	32	
		TNAGT5A	45.000	--	1.024	46.084	1.4	0.274	1.32	65'	EL	32	0.513	1.57	65'	EL	6.4	0.80	0.274	1.02	65'	EL	32	
		TNAGT5B	45.000	3	**1.01**	45.431	1.4	0.274	1.3	65'	EL	32	0.513	1.49	65'	EL	6.4	0.80	0.274	**1.01**	65'	EL	**32**	

LOAD FACTORS:

DESIGN LOAD RATING FACTORS	LIMIT STATE	γ_{DC}	γ_{DW}
	STRENGTH I	1.25	1.50
	SERVICE III	1.00	1.00

NOTES:

MINIMUM RATING FACTORS ARE BASED ON THE STRENGTH I AND SERVICE III LIMIT STATES.

ALLOWABLE STRESSES FOR SERVICE III LIMIT STATE ARE AS REQUIRED FOR DESIGN.

COMMENTS:

1.
2.
3.
4.

(#) CONTROLLING LOAD RATING

(1) DESIGN LOAD RATING (HL-93)

(2) DESIGN LOAD RATING (HS-20)

(3) LEGAL LOAD RATING **

** SEE CHART FOR VEHICLE TYPE

GIRDER LOCATION

I - INTERIOR GIRDER
EL - EXTERIOR LEFT GIRDER
ER - EXTERIOR RIGHT GIRDER

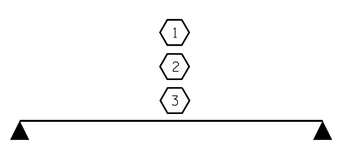

LRFR SUMMARY

FOR SPAN 'A'

PROJECT NO. 17BP.7.R.33

GUILFORD COUNTY

STATION: 12+63.00 -L-

SHEET 1 OF 2 REPLACES BRIDGE #400338

NORTH CAROLINA PROFESSIONAL SEAL 035762 ENGINEER JOSEPH J. PICCIRILLI

DocuSigned by: Joseph J Piccirilli 6/15/2015

Kimley-Horn and Associates, Inc.
333 Fayetteville Street, Suite 600
Raleigh, NC 27601-1772
Phone (919) 677-2042
Fax (919) 653-5847
NC LICENSE # F-0102

This document, together with the concepts and designs presented herein, as an instrument of service, is intended only for the specific purpose and client for which it was prepared. Reuse of and improper reliance on this document without written authorization and adoption by Kimley-Horn and Associates, Inc. shall be without liability to Kimley-Horn and Associates, Inc.

Copyright Kimley-Horn and Associates, Inc., 2013

STATE OF NORTH CAROLINA
DEPARTMENT OF TRANSPORTATION
RALEIGH

STANDARD
LRFR SUMMARY FOR 65' CORED SLAB UNIT 90° SKEW
(NON-INTERSTATE TRAFFIC)

REVISIONS						SHEET NO.
NO.	BY:	DATE:	NO.	BY:	DATE:	S-3
1			3			TOTAL SHEETS
2			4			18

ASSEMBLED BY : JCW DATE : 4/13
CHECKED BY : CRA DATE : 4/13
DRAWN BY : CVC 6/10
CHECKED BY : DNS 6/10

6/15/2015 K:\ROT_Structures_Bridge\NC\17BP Bridges - Group E\01103693_BR400338\Cad\dgn\S-3.dgn

STD. NO. 24LRFR1_90S_65L

DocuSign Envelope ID: 31119006-74F2-42F7-A98A-E2761043138F

LOAD AND RESISTANCE FACTOR RATING (LRFD) SUMMARY FOR PRESTRESSED CONCRETE GIRDERS

LEVEL		VEHICLE	WEIGHT (W) (TONS)	CONTROLLING LOAD RATING	MINIMUM RATING FACTORS (RF)	TONS = W X RF	STRENGTH I LIMIT STATE											SERVICE III LIMIT STATE						COMMENT NUMBER
								MOMENT					SHEAR						MOMENT					
							LIVELOAD FACTORS	DISTRIBUTION FACTORS (DF)	RATING FACTOR	SPAN	GIRDER LOCATION	DISTANCE FROM LEFT END OF SPAN (ft)	DISTRIBUTION FACTORS (DF)	RATING FACTOR	SPAN	GIRDER LOCATION	DISTANCE FROM LEFT END OF SPAN (ft)	LIVELOAD FACTORS	DISTRIBUTION FACTORS (DF)	RATING FACTOR	SPAN	GIRDER LOCATION	DISTANCE FROM LEFT END OF SPAN (ft)	
DESIGN LOAD RATING		HL-93(Inv)	N/A	**1**	**1.46**	--	1.75	0.323	1.93	25'	EL	12	0.632	1.84	25'	EL	2.000	0.80	0.323	**1.46**	25'	EL	**12**	
		HL-93(Opr)	N/A	--	2.50	--	1.35	0.323	2.50	25'	EL	12	0.632	2.71	25'	EL	2.500	N/A	--	--	--	--	--	
		HS-20(Inv)	36.000	**2**	**2.17**	78.12	1.75	0.323	2.86	25'	EL	12	0.632	2.46	25'	EL	2.500	0.80	0.323	**2.17**	25'	EL	**12**	
		HS-20(Opr)	36.000	--	3.21	115.56	1.35	0.323	3.71	25'	EL	12	0.632	3.21	25'	EL	2.500	N/A	--	--	--	--	--	
LEGAL LOAD RATING	SV	SNSH	13.500	--	2.52	34.02	1.40	0.323	4.04	25'	EL	12	0.632	4.39	25'	EL	2.500	0.80	0.323	2.52	25'	EL	12	
		SNGARBS2	20.000	--	2.36	47.20	1.40	0.323	3.79	25'	EL	12	0.632	3.56	25'	EL	2.500	0.80	0.323	2.36	25'	EL	12	
		SNAGRIS2	22.000	--	2.52	55.44	1.40	0.323	4.04	25'	EL	12	0.632	3.52	25'	EL	2.500	0.80	0.323	2.52	25'	EL	12	
		SNCOTTS3	27.250	--	1.32	35.97	1.40	0.323	2.12	25'	EL	12	0.632	2.06	25'	EL	2.000	0.80	0.323	1.32	25'	EL	12	
		SNAGGRS4	34.925	--	1.31	45.75	1.40	0.323	2.11	25'	EL	12	0.632	1.90	25'	EL	2.000	0.80	0.323	1.31	25'	EL	12	
		SNS5A	35.550	--	1.27	45.15	1.40	0.323	2.05	25'	EL	12	0.632	2.07	25'	EL	2.000	0.80	0.323	1.27	25'	EL	12	
		SNS6A	39.950	--	1.19	47.54	1.40	0.323	1.92	25'	EL	12	0.632	1.98	25'	EL	2.000	0.80	0.323	1.19	25'	EL	12	
		SNS7B	42.000	**3**	**1.19**	49.98	1.40	0.323	1.91	25'	EL	12	0.632	1.99	25'	EL	2.000	0.80	0.323	**1.19**	25'	EL	**12**	
	TTST	TNAGRIT3	33.000	--	1.68	55.44	1.40	0.323	2.70	25'	EL	12	0.632	2.71	25'	EL	2.500	0.80	0.323	1.68	25'	EL	12	
		TNT4A	33.075	--	1.46	48.29	1.40	0.323	2.34	25'	EL	12	0.632	2.34	25'	EL	2.500	0.80	0.323	1.46	25'	EL	12	
		TNT6A	41.600	--	1.37	56.99	1.40	0.323	2.20	25'	EL	12	0.632	2.09	25'	EL	2.000	0.80	0.323	1.37	25'	EL	12	
		TNT7A	42.000	--	1.42	59.64	1.40	0.323	2.27	25'	EL	12	0.632	2.13	25'	EL	2.000	0.80	0.323	1.42	25'	EL	12	
		TNT7B	42.000	--	1.28	53.76	1.40	0.323	2.05	25'	EL	12	0.632	1.99	25'	EL	2.000	0.80	0.323	1.28	25'	EL	12	
		TNAGRIT4	43.000	--	1.37	58.91	1.40	0.323	2.20	25'	EL	12	0.632	1.94	25'	EL	2.000	0.80	0.323	1.37	25'	EL	12	
		TNAGT5A	45.000	--	1.37	61.65	1.40	0.323	2.20	25'	EL	12	0.632	2.05	25'	EL	2.000	0.80	0.323	1.37	25'	EL	12	
		TNAGT5B	45.000	--	1.38	62.10	1.40	0.323	2.18	25'	EL	9.5	0.632	1.66	25'	EL	2.000	0.80	0.323	1.38	25'	EL	12	

LOAD FACTORS:

DESIGN LOAD RATING FACTORS	LIMIT STATE	γ_{DC}	γ_{DW}
	STRENGTH I	1.25	1.50
	SERVICE III	1.00	1.00

NOTES:

MINIMUM RATING FACTORS ARE BASED ON THE STRENGTH I AND SERVICE III LIMIT STATES.

ALLOWABLE STRESSES FOR SERVICE III LIMIT STATE ARE AS REQUIRED FOR DESIGN.

COMMENTS:

1.
2.
3.
4.

(#) CONTROLLING LOAD RATING

(1) DESIGN LOAD RATING (HL-93)

(2) DESIGN LOAD RATING (HS-20)

(3) LEGAL LOAD RATING **

** SEE CHART FOR VEHICLE TYPE

GIRDER LOCATION

I - INTERIOR GIRDER
EL - EXTERIOR LEFT GIRDER
ER - EXTERIOR RIGHT GIRDER

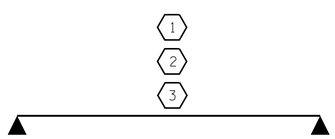

LRFR SUMMARY

FOR SPAN 'B'

PROJECT NO. 17BP.7.R.33

GUILFORD COUNTY

STATION: 12+63.00 -L-

SHEET 2 OF 2 REPLACES BRIDGE #400338

NORTH CAROLINA PROFESSIONAL SEAL 035762 ENGINEER JOSEPH J. PICCIRILLI

DocuSigned by: Joseph J Piccirilli 6/15/2015

518126EEC16C433

Kimley-Horn and Associates, Inc.
333 Fayetteville Street, Suite 600
Raleigh, NC 27601-1772
Phone (919) 677-2042
Fax (919) 653-5847
NC LICENSE # F-0102

This document, together with the concepts and designs presented herein, as an instrument of service, is intended only for the specific purpose and client for which it was prepared. Reuse of and improper reliance on this document without written authorization and adoption by Kimley-Horn and Associates, Inc. shall be without liability to Kimley-Horn and Associates, Inc.

Copyright Kimley-Horn and Associates, Inc., 2013

STATE OF NORTH CAROLINA
DEPARTMENT OF TRANSPORTATION
RALEIGH

LRFR SUMMARY FOR 25' CORED SLAB UNIT 90° SKEW (NON-INTERSTATE TRAFFIC)

REVISIONS						SHEET NO.
NO.	BY:	DATE:	NO.	BY:	DATE:	S-4
1			3			TOTAL SHEETS
2			4			18

DRAWN BY: CRA DATE: 4/13
CHECKED BY: JCW DATE: 4/13

6/15/2015 K:\RDI_Structures_Bridge\NC\17BP Bridges - Group E\01103193_BR400338\Cad\dgn\S-4.dgn

DocuSign Envelope ID: 31119006-74F2-42F7-A98A-E2761043138F

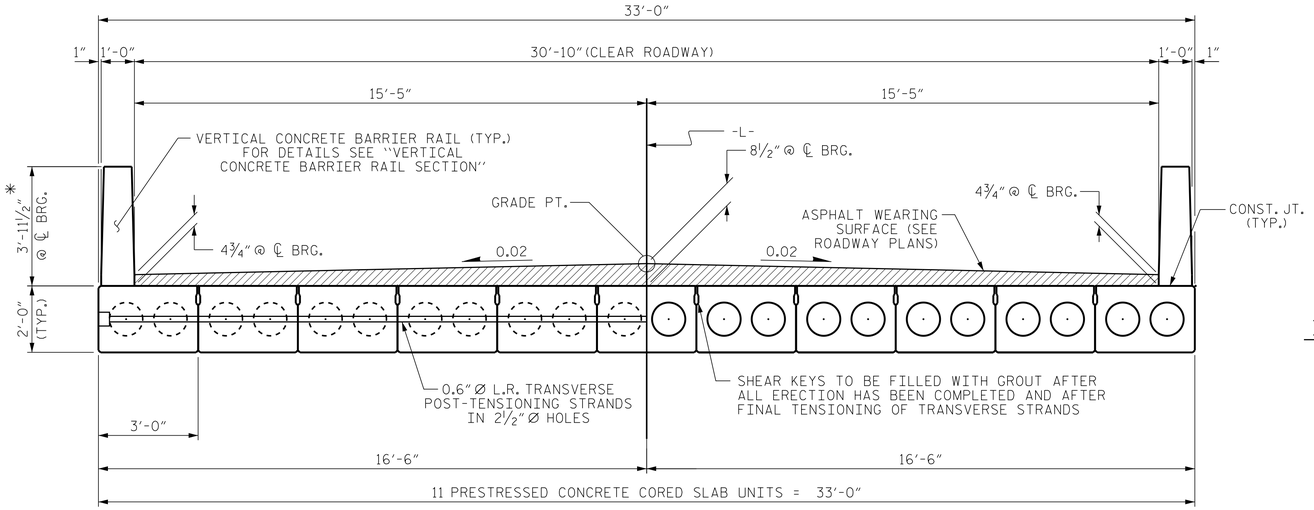

HALF SECTION
AT INTERMEDIATE DIAPHRAGMS

TYPICAL SECTION

HALF SECTION
THROUGH VOIDS

* - THE MAXIMUM BARRIER RAIL HEIGHT AND ASPHALT THICKNESS IS SHOWN. THE HEIGHT OF THE BARRIER RAIL AND ASPHALT THICKNESS VARIES WHILE THE TOP OF THE BARRIER RAIL FOLLOWS THE PROFILE OF THE GUTTERLINE. FOR RAIL HEIGHT DETAILS AND ASPHALT THICKNESS, SEE THE "VERTICAL CONCRETE BARRIER RAIL SECTION" DETAIL.

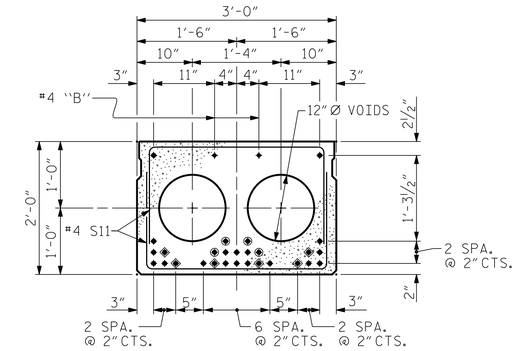

INTERIOR SLAB SECTION (65' UNIT, SPAN A)
(24 STRANDS REQUIRED)

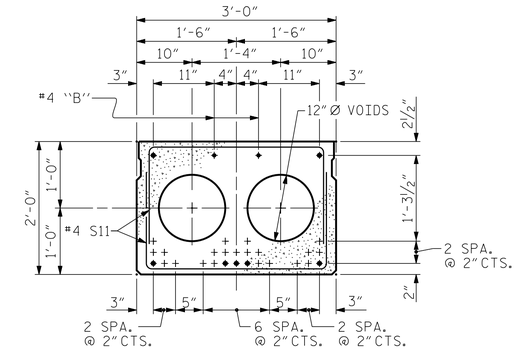

INTERIOR SLAB SECTION (25' UNIT, SPAN B)
(7 STRANDS REQUIRED)

0.6" Ø LOW RELAXATION STRAND LAYOUT

◈ BOND SHALL BE BROKEN ON THESE STRANDS FOR A DISTANCE OF 12'-0" FROM END OF CORED SLAB UNIT. SEE STANDARD SPECIFICATIONS, ARTICLE 1078-7.

◉ OPTIONAL FULL LENGTH DEBONDED STRANDS. THESE STRANDS ARE NOT REQUIRED. IF THE FABRICATOR CHOOSES TO INCLUDE THESE STRANDS IN THE CORED SLAB UNIT, THE STRANDS SHALL BE DEBONDED FOR THE FULL LENGTH OF THE UNIT AT NO ADDITIONAL COST. SEE STANDARD SPECIFICATIONS, ARTICLE 1078-7.

DEBONDING LEGEND

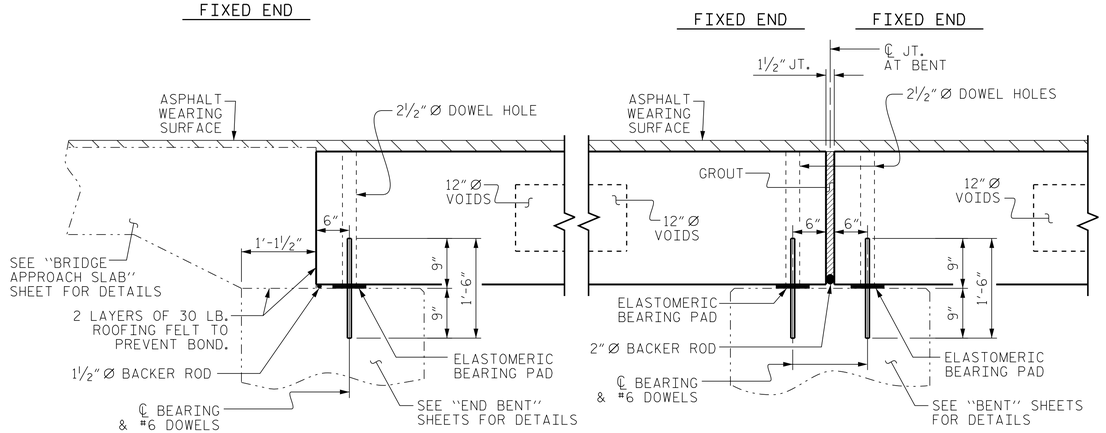

SECTION AT END BENT

SECTION AT BENT

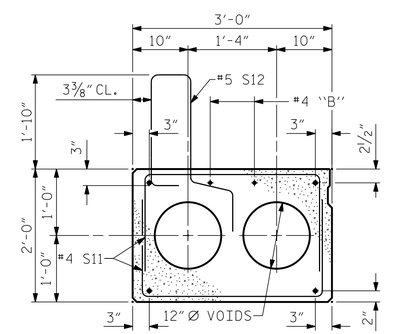

EXTERIOR SLAB SECTION
(FOR PRESTRESSED STRAND LAYOUT, SEE INTERIOR SLAB SECTION.)

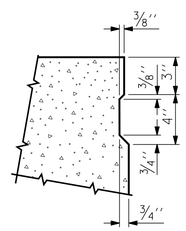

SHEAR KEY DETAIL

NOTE: OMIT SHEAR KEY ON OUTSIDE FACE OF EXTERIOR CORED SLABS.

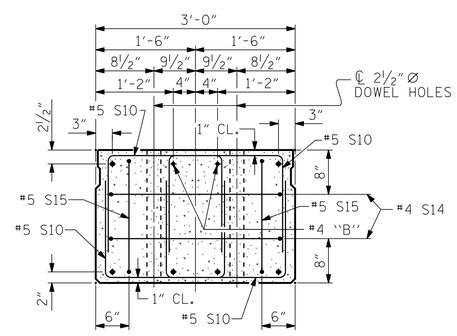

END ELEVATION

SHOWING PLACEMENT OF DOUBLE STIRRUPS AND LOCATION OF DOWEL HOLES. (STRAND LAYOUT NOT SHOWN.) INTERIOR SLAB UNIT SHOWN-EXTERIOR SLAB UNIT SIMILAR EXCEPT SHEAR KEY LOCATION.

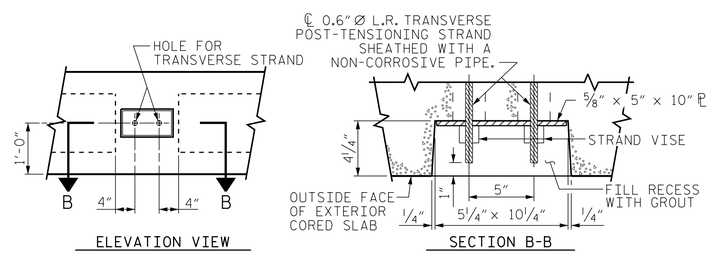

GROUTED RECESS AT END OF POST-TENSIONED STRAND-CORED SLABS

PROJECT NO. 17BP.7.R.33
GUILFORD COUNTY
STATION: 12+63.00 -L-

SHEET 1 OF 4 REPLACES BRIDGE #400338

STATE OF NORTH CAROLINA
DEPARTMENT OF TRANSPORTATION
RALEIGH

STANDARD
3'-0" X 2'-0"
PRESTRESSED CONCRETE
CORED SLAB UNIT
90° SKEW

NORTH CAROLINA PROFESSIONAL SEAL 035762 ENGINEER JOSEPH J. PICCIRILLI
DocuSigned by: Joseph J Piccirilli 6/15/2015
5181266FC16D433...

Kimley-Horn and Associates, Inc.
333 Fayetteville Street, Suite 600
Raleigh, NC 27601-1772
Phone (919) 677-2042
Fax (919) 653-5847
NC LICENSE # F-0102

This document, together with the concepts and designs presented herein, as an instrument of services, is intended only for the specific purpose and client for which it was prepared. Reuse of and improper reliance of this document without written authorization and adaption by Kimley-Horn and Associates, Inc. shall be without liability to Kimley-Horn and Associates, Inc.
Copyright Kimley-Horn and Associates, Inc., 2013

REVISIONS						SHEET NO.
NO.	BY:	DATE:	NO.	BY:	DATE:	S-5
1			3			TOTAL SHEETS
2			4			18

ASSEMBLED BY : JCW		DATE :	4/13
CHECKED BY : CRA		DATE :	4/13
DRAWN BY : MAA	6/10	REV. 12/11	MAA/AAC
CHECKED BY : MKT	7/10		

6/15/2015
K:\RDT_Structures_Bridge\NC\17BP Bridges - Group E\01103619 3_BR400338\Cad\dgn\S-5.dgn

STD. NO. 24PCS4_33_90S

DocuSign Envelope ID: 31119006-74F2-42F7-A98A-E2761043138F

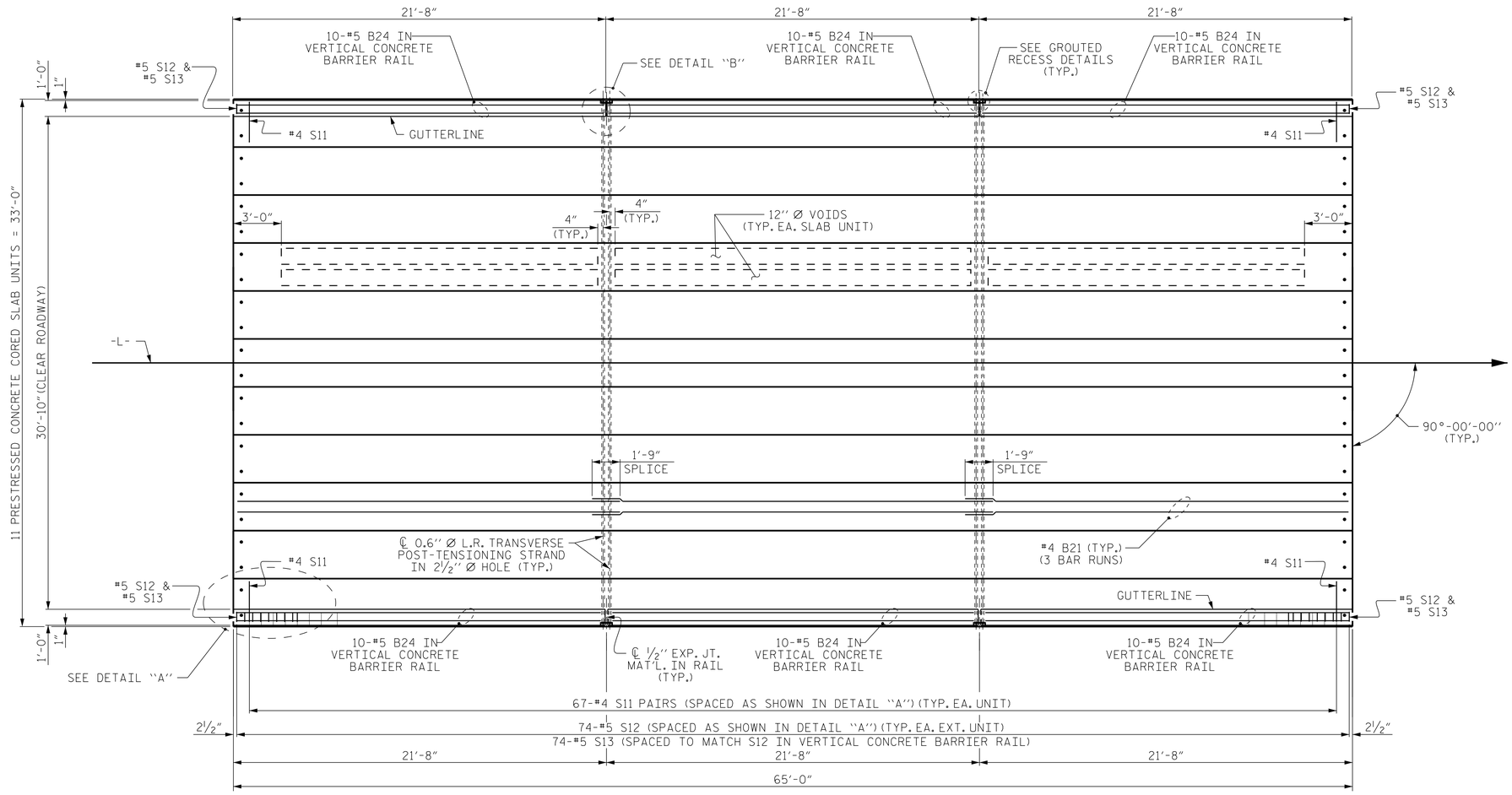

PLAN OF UNIT

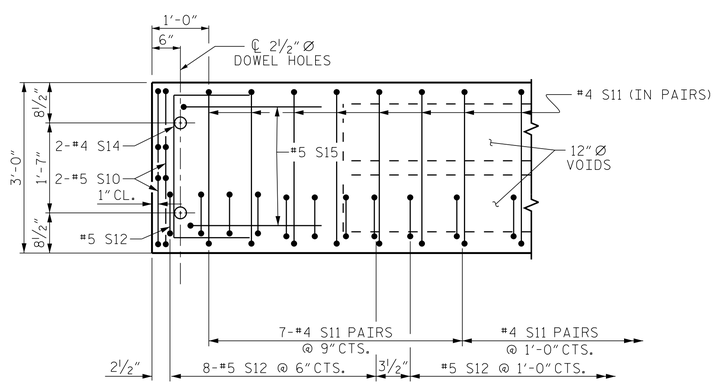

DETAIL "A"

NOTE: EXTERIOR UNIT SHOWN - INTERIOR UNIT SIMILAR EXCEPT OMIT #5 S12 BARS.

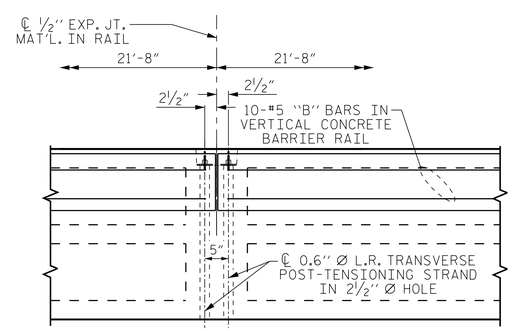

DETAIL "B"

#4 S11 BARS MAY BE SHIFTED AS NECESSARY TO MAINTAIN 1" CLEAR TO GROUTED RECESS AND 2½" Ø TRANSVERSE POST-TENSIONING STRAND HOLES

PROJECT NO. 17BP.7.R.33

GUILFORD COUNTY

STATION: 12+63.00 -L-

SHEET 2 OF 4 REPLACES BRIDGE #400338

STATE OF NORTH CAROLINA
DEPARTMENT OF TRANSPORTATION
RALEIGH

STANDARD

PLAN OF 65' UNIT
30'-10" CLEAR ROADWAY
90° SKEW (SPAN A)

NORTH CAROLINA PROFESSIONAL SEAL 035762 ENGINEER JOSEPH J. PICCIRILLI

DocuSigned by: Joseph J Piccirilli 6/15/2015
5181266EC18C433...

Kimley-Horn and Associates, Inc.
333 Fayetteville Street, Suite 600
Raleigh, NC 27601-1772
Phone (919) 677-2042
Fax (919) 653-5847
NC LICENSE # F-0102

This document, together with the concepts and designs presented herein, as an instrument of services, is intended only for the specific purpose and client for which it was prepared. Reuse of and improper reliance of this document without written consent by Kimley-Horn and Associates, Inc. shall be without liability to Kimley-Horn and Associates, Inc.

Copyright Kimley-Horn and Associates, Inc., 2013

REVISIONS						SHEET NO.
NO.	BY:	DATE:	NO.	BY:	DATE:	S-6
1			3			TOTAL SHEETS
2			4			18

ASSEMBLED BY : JCW		DATE : 4/13	
CHECKED BY : CRA		DATE : 4/13	
DRAWN BY : MAA	6/10	REV. 12/5/11	MAA/AAC
CHECKED BY : MKT	7/10		

6/15/2015

K:\RDT_Structures_Bridge\NC\17BP Bridges - Group E\01036193.BR400338\Cad\dgn\S-6.dgn

STD. NO. 24PCS_33_90S_65L

DocuSign Envelope ID: 31119006-74F2-42F7-A98A-E2761043138F

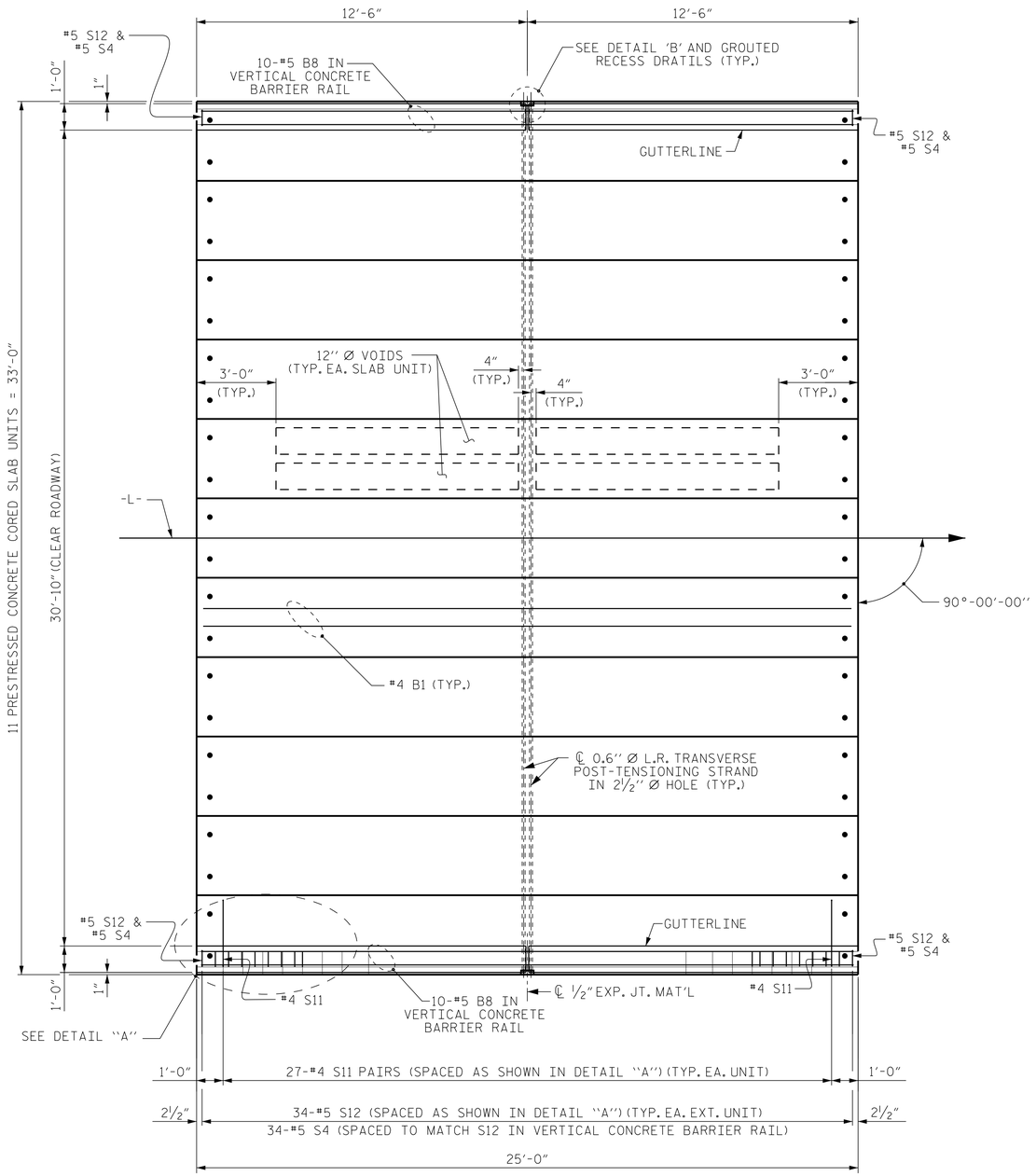

PLAN OF UNIT

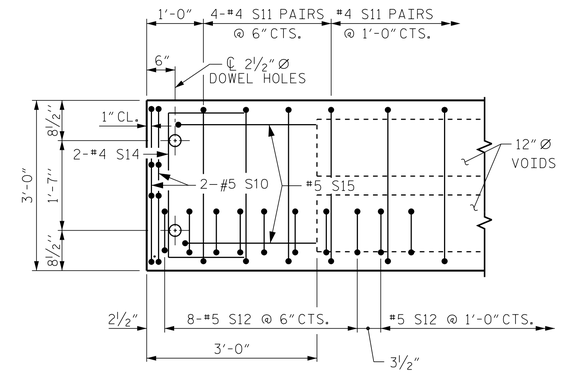

DETAIL "A"

NOTE: EXTERIOR UNIT SHOWN - INTERIOR UNIT SIMILAR EXCEPT OMIT #5 S12 BARS.

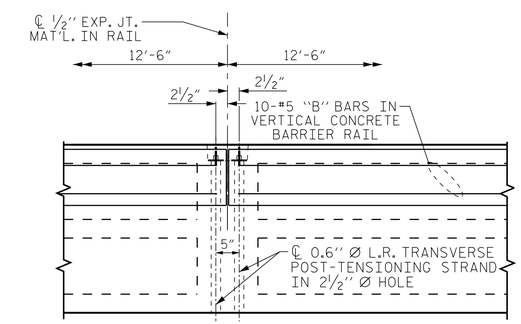

DETAIL "B"

#4 S11 BARS MAY BE SHIFTED AS NECESSARY TO MAINTAIN 1" CLEAR TO GROUTED RECESS AND 2½" Ø TRANSVERSE POST-TENSIONING STRAND HOLES

PROJECT NO. 17BP.7.R.33

GUILFORD COUNTY

STATION: 12+63.00 -L-

SHEET 3 OF 4 REPLACES BRIDGE #400338

STATE OF NORTH CAROLINA
DEPARTMENT OF TRANSPORTATION
RALEIGH

PLAN OF 25' UNIT
30'-10" CLEAR ROADWAY
90° SKEW (SPAN B)

NORTH CAROLINA PROFESSIONAL SEAL 035762 ENGINEER JOSEPH J. PICCIRILLI

DocuSigned by: Joseph J Piccirilli 6/15/2015
5181266EC16C433...

Kimley-Horn and Associates, Inc.
333 Fayetteville Street, Suite 600
Raleigh, NC 27601-1772
Phone (919) 677-2042
Fax (919) 653-5847
NC LICENSE # F-0102

This document, together with the concepts and designs presented herein, as an instrument of services, is intended only for the specific purpose and client for which it was prepared. Reuse of and improper reliance of this document without written authorization and adoption by Kimley-Horn and Associates, Inc. shall be without liability to Kimley-Horn and Associates, Inc.

Copyright Kimley-Horn and Associates, Inc., 2013

REVISIONS						
NO.	BY:	DATE:	NO.	BY:	DATE:	
1			3			
2			4			

SHEET NO. S-7

TOTAL SHEETS 18

DRAWN BY: CRA DATE: 4/13
CHECKED BY: JCW DATE: 4/13

6/15/2015 K:\RDT_Structures_Bridge\NC\17BP Bridges - Group E\01036193.BR400338\Cad\dgn\S-7.dgn

DocuSign Envelope ID: 31119006-74F2-42F7-A98A-E2761043138F

GUTTERLINE ASPHALT THICKNESS & RAIL HEIGHT

	ASPHALT OVERLAY THICKNESS @ MID-SPAN	RAIL HEIGHT @ MID-SPAN
65′ UNIT	1⅞″	3′-8⅝″
25′ UNIT	4⅝″	3′-11⅜″

GRADE 270 STRANDS

	0.6″ Ø L.R.
AREA (SQUARE INCHES)	0.217
ULTIMATE STRENGTH (LBS. PER STRAND)	58,600
APPLIED PRESTRESS (LBS. PER STRAND)	43,950

CORED SLABS REQUIRED

	NUMBER	LENGTH	TOTAL LENGTH
25′ UNIT			
EXTERIOR C.S.	2	25′-0″	50′-0″
INTERIOR C.S.	9	25′-0″	225′-0″
TOTAL	11		275′-0″

CORED SLABS REQUIRED

	NUMBER	LENGTH	TOTAL LENGTH
65′ UNIT			
EXTERIOR C.S.	2	65′-0″	130′-0″
INTERIOR C.S.	9	65′-0″	585′-0″
TOTAL	11		715′-0″

BAR TYPES

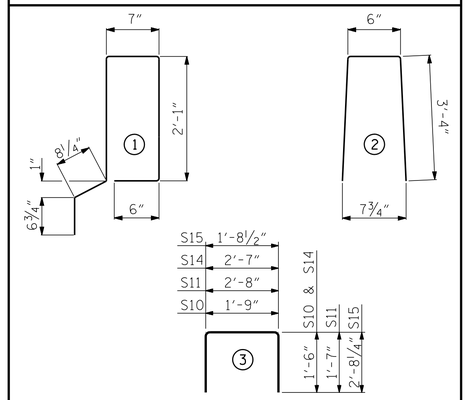

ALL BAR DIMENSIONS ARE OUT TO OUT

NOTES

ALL PRESTRESSING STRANDS SHALL BE 7-WIRE LOW RELAXATION GRADE 270 STRANDS AND SHALL CONFORM TO AASHTO M203 EXCEPT FOR SAMPLING REQUIREMENTS WHICH SHALL BE IN ACCORDANCE WITH THE STANDARD SPECIFICATIONS.

ALL REINFORCING STEEL CAST WITH THE CORED SLAB SECTIONS SHALL BE GRADE 60 AND SHALL BE INCLUDED IN THE UNIT PRICE BID FOR PRESTRESSED CONCRETE CORED SLABS.

RECESSES FOR TRANSVERSE STRANDS SHALL BE GROUTED AFTER THE TENSIONING OF THE STRANDS.

THE 2½″ Ø DOWEL HOLES AT FIXED ENDS OF SLAB SECTIONS SHALL BE FILLED WITH NON-SHRINK GROUT.

THE 2″ Ø BACKER ROD SHALL CONFORM TO THE REQUIREMENTS OF TYPE M BOND BREAKER. SEE SECTION 1028 OF THE STANDARD SPECIFICATIONS.

WHEN CORED SLABS ARE CAST, AN INTERNAL HOLD-DOWN SYSTEM SHALL BE EMPLOYED TO PREVENT VOIDS FROM RISING OR MOVING SIDEWAYS. AT LEAST SIX WEEKS PRIOR TO CASTING CORED SLABS, THE CONTRACTOR SHALL SUBMIT TO THE ENGINEER FOR REVIEW AND COMMENT, DETAILED DRAWINGS OF THE PROPOSED HOLD-DOWN SYSTEM. IN ADDITION TO STRUCTURAL DETAILS, LOCATION AND SPACING OF THE HOLD-DOWNS SHALL BE INDICATED.

THE TRANSFER OF LOAD FROM THE ANCHORAGES TO THE CORED SLAB UNIT SHALL BE DONE WHEN THE CONCRETE HAS REACHED A COMPRESSIVE STRENGTH OF NOT LESS THAN THE REQUIRED STRENGTH SHOWN IN THE "CONCRETE RELEASE STRENGTH" TABLE.

ALL REINFORCING STEEL IN VERTICAL CONCRETE BARRIER RAILS SHALL BE EPOXY COATED.

PRESTRESSING STRANDS SHALL BE CUT FLUSH WITH THE CORED SLAB UNIT ENDS.

APPLY EPOXY PROTECTIVE COATING TO CORED SLAB UNIT ENDS.

GROOVED CONTRACTION JOINTS, ½″ IN DEPTH, SHALL BE TOOLED IN ALL EXPOSED FACES OF THE BARRIER RAIL AND IN ACCORDANCE WITH ARTICLE 825-10(B) OF THE STANDARD SPECIFICATIONS. A CONTRACTION JOINT SHALL BE LOCATED AT EACH THIRD POINT BETWEEN BARRIER RAIL EXPANSION JOINTS. ONLY ONE CONTRACTION JOINT IS REQUIRED AT MIDPOINT OF BARRIER RAIL SEGMENTS LESS THAN 20 FEET IN LENGTH AND NO CONTRACTION JOINTS ARE REQUIRED FOR THOSE SEGMENTS LESS THAN 10 FEET IN LENGTH.

TRANSVERSE POST TENSIONING OF THE CORED SLAB UNITS SHALL BE DONE IN ACCORDANCE WITH THE STANDARD SPECIFICATIONS.

MAINTAIN A SYMMETRIC TENSION FORCE BETWEEN EACH PAIR OF TRANSVERSE POST TENSIONING STRANDS IN THE DIAPHRAGM.

THE #4 S11 STIRRUPS MAY BE SHIFTED AS NECESSARY TO MAINTAIN 1″ CLEAR TO THE GROUTED RECESS.

FOR GROUT FOR STRUCTURES, SEE SPECIAL PROVISIONS.

SEE "GUARDRAIL ANCHORAGE DETAILS" SHEET FOR "END OF RAIL DETAILS".

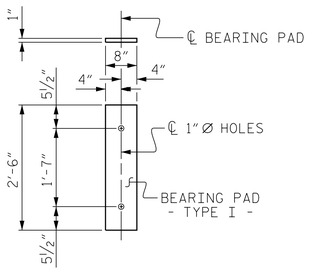

FIXED END
(TYPE I - 44 REQ'D)

ELASTOMERIC BEARING DETAILS

ELASTOMER IN ALL BEARINGS SHALL BE 60 DUROMETER HARDNESS.

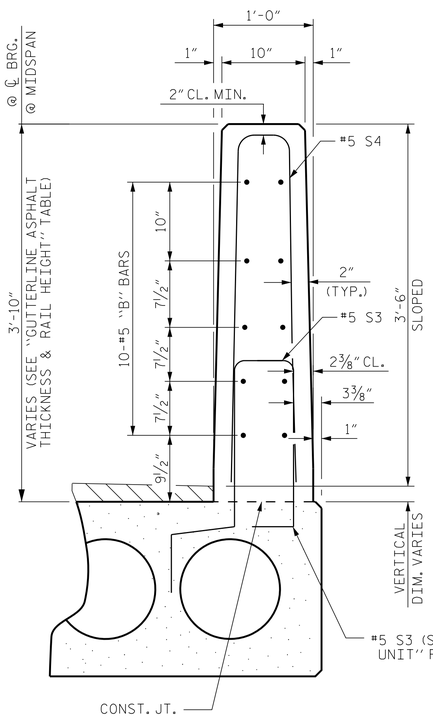

VERTICAL CONCRETE BARRIER RAIL SECTION

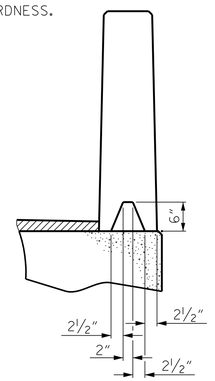

SECTION S-S
AT DAM IN OPEN JOINT
(THIS IS TO BE USED ONLY WHEN SLIP FORM IS USED)

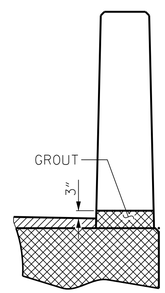

SECTION T-T
AT OPEN JOINT AT BENT
(THIS IS TO BE USED WHERE FOAM JOINT IS NOT USED)

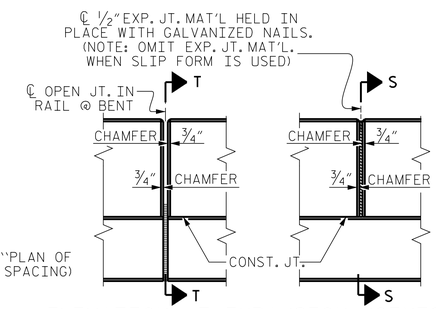

ELEVATION AT EXPANSION JOINTS

BILL OF MATERIAL FOR VERTICAL CONCRETE BARRIER RAIL

BAR	BARS PER PAIR OF EXTERIOR UNITS	TOTAL NO.	SIZE	TYPE	LENGTH	WEIGHT
	25′ UNIT					
✳ B8	20	1	#5	STR	24′-7″	513
✳ S4	68	1	#5	2	7′-2″	508
✳ EPOXY COATED REINFORCING STEEL				LBS.		1021
CLASS AA CONCRETE				CU.YDS.		6.6
TOTAL VERTICAL CONCRETE BARRIER RAIL				LN. FT.		50.25

BILL OF MATERIAL FOR VERTICAL CONCRETE BARRIER RAIL

BAR	BARS PER PAIR OF EXTERIOR UNITS	TOTAL NO.	SIZE	TYPE	LENGTH	WEIGHT
	65′ UNIT					
✳ B24	60	1	#5	STR	21′-3″	1330
✳ S13	148	1	#5	2	7′-2″	1106
✳ EPOXY COATED REINFORCING STEEL				LBS.		2436
CLASS AA CONCRETE				CU.YDS.		17.6
TOTAL VERTICAL CONCRETE BARRIER RAIL				LN. FT.		130.25

BILL OF MATERIAL FOR ONE 25′ CORED SLAB UNIT

				EXTERIOR UNIT		INTERIOR UNIT	
BAR	NUMBER	SIZE	TYPE	LENGTH	WEIGHT	LENGTH	WEIGHT
B1	2	#4	STR	24′-8″	33	24′-8″	33
S10	8	#5	3	4′-9″	40	4′-9″	40
S11	54	#4	3	5′-10″	210	5′-10″	210
✳ S12	34	#5	1	6′-6″	231		
S14	4	#4	3	5′-7″	15	5′-7″	15
S15	4	#5	3	7′-1″	30	7′-1″	30
REINFORCING STEEL			LBS.		327		327
✳ EPOXY COATED REINFORCING STEEL			LBS.		231		
5000 P.S.I. CONCRETE			CU. YDS.		4.5		4.5
0.6″ Ø L.R. STRANDS			No.		7		7

BILL OF MATERIAL FOR ONE 65′ CORED SLAB UNIT

				EXTERIOR UNIT		INTERIOR UNIT	
BAR	NUMBER	SIZE	TYPE	LENGTH	WEIGHT	LENGTH	WEIGHT
B21	6	#4	STR	22′-10″	92	22′-10″	92
S10	8	#5	3	4′-9″	40	4′-9″	40
S11	134	#4	3	5′-10″	522	5′-10″	522
✳ S12	74	#5	1	6′-6″	502		
S14	4	#4	3	5′-7″	15	5′-7″	15
S15	4	#5	3	7′-1″	30	7′-1″	30
REINFORCING STEEL			LBS.		699		699
✳ EPOXY COATED REINFORCING STEEL			LBS.		502		
6000 P.S.I. CONCRETE			CU. YDS.		11.0		11.0
0.6″ Ø L.R. STRANDS			No.		24		24

DEAD LOAD DEFLECTION AND CAMBER

	3′-0″ × 2′-0″
25′ CORED SLAB UNIT	0.6″ Ø L.R. STRAND
CAMBER (SLAB ALONE IN PLACE)	⅛″ ↑
DEFLECTION DUE TO SUPERIMPOSED DEAD LOAD✳✳	0″ ↓
FINAL CAMBER	⅛″ ↑

✳✳ INCLUDES FUTURE WEARING SURFACE

DEAD LOAD DEFLECTION AND CAMBER

	3′-0″ × 2′-0″
65′ CORED SLAB UNIT	0.6″ Ø L.R. STRAND
CAMBER (SLAB ALONE IN PLACE)	3⅜″ ↑
DEFLECTION DUE TO SUPERIMPOSED DEAD LOAD✳✳	½″ ↓
FINAL CAMBER	2⅞″ ↑

✳✳ INCLUDES FUTURE WEARING SURFACE

CONCRETE RELEASE STRENGTH

UNIT	PSI
65′ UNIT	4800
25′ UNIT	4000

PROJECT NO. 17BP.7.R.33
GUILFORD COUNTY
STATION: 12+63.00 -L-

SHEET 4 OF 4 REPLACES BRIDGE #400338

NORTH CAROLINA PROFESSIONAL SEAL 035762 ENGINEER JOSEPH J. PICCIRILLI

DocuSigned by: Joseph J Piccirilli 6/15/2015
51812666C18C433

Kimley-Horn and Associates, Inc.
333 Fayetteville Street, Suite 600
Raleigh, NC 27601-1772
Phone (919) 677-2042
Fax (919) 653-5847
NC LICENSE # F-0102

This document, together with the concepts and designs presented herein, as an instrument of services, is intended only for the specific purpose and client for which it was prepared. Reuse of and improper reliance on this document without written authorization and adaptation by Kimley-Horn and Associates, Inc. shall be without liability to Kimley-Horn and Associates, Inc.
Copyright Kimley-Horn and Associates, Inc., 2013

STATE OF NORTH CAROLINA
DEPARTMENT OF TRANSPORTATION
RALEIGH

STANDARD
3′-0″ X 2′-0″
PRESTRESSED CONCRETE
CORED SLAB UNIT
90° SKEW

REVISIONS						SHEET NO.
NO.	BY:	DATE:	NO.	BY:	DATE:	S-8
1			3			TOTAL SHEETS
2			4			18

STD. NO. 24PCS3_33_90S

ASSEMBLED BY : JCW		DATE : 4/13	
CHECKED BY : CRA		DATE : 4/13	
DRAWN BY : MAA 6/10	REV. 12/11	MAA/AAC	
CHECKED BY : MKT 7/10			

6/15/2015

K:\RDT_Structures_Bridge\NC\17BP Bridges - Group E\01036193.BR400338\Cad\dgn\S-8.dgn

DocuSign Envelope ID: 31119006-74F2-42F7-A98A-E2761043138F

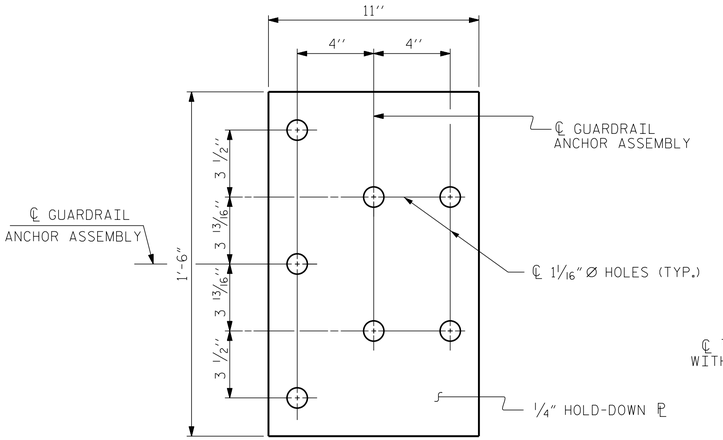

PLAN

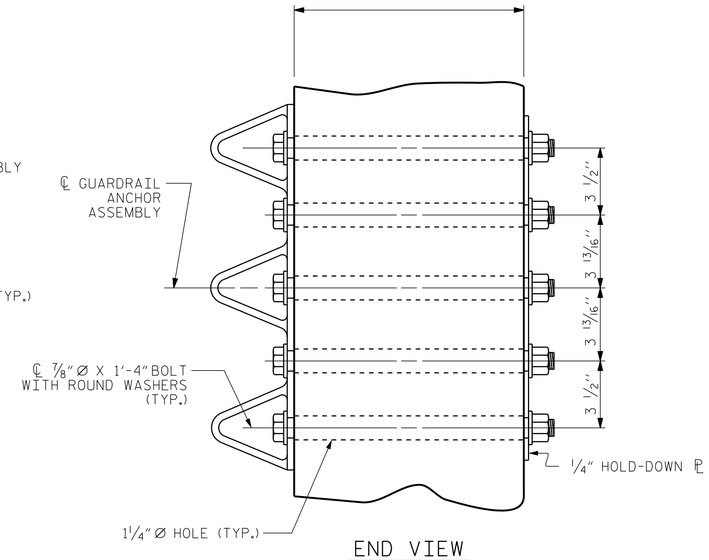

END VIEW

GUARDRAIL ANCHOR ASSEMBLY DETAILS

NOTES

THE GUARDRAIL ANCHOR ASSEMBLY SHALL CONSIST OF A 1/4'' HOLD DOWN PLATE AND 7 - 7/8'' Ø BOLTS WITH NUTS AND WASHERS.

THE HOLD-DOWN PLATE SHALL CONFORM TO AASHTO M270 GRADE 36. AFTER FABRICATION, THE HOLD-DOWN PLATE SHALL BE HOT-DIP GALVANIZED IN ACCORDANCE WITH AASHTO M111.

BOLTS SHALL CONFORM TO THE REQUIREMENTS OF ASTM A307 AND NUTS SHALL CONFORM TO THE REQUIREMENTS OF AASHTO M291. BOLTS, NUTS AND WASHERS SHALL BE GALVANIZED. (AT THE CONTRACTOR'S OPTION, STAINLESS STEEL BOLTS, NUTS AND WASHERS MAY BE USED AS AN ALTERNATE FOR THE 7/8'' Ø GALVANIZED BOLTS, NUTS AND WASHERS. THEY SHALL CONFORM TO OR EXCEED THE MECHANICAL REQUIREMENTS OF ASTM A307. THE USE OF THIS ALTERNATE SHALL BE APPROVED BY THE ENGINEER.)

THE GUARDRAIL ANCHOR ASSEMBLY IS REQUIRED AT ALL POINTS WHERE APPROACH GUARDRAIL IS TO BE ATTACHED TO THE END OF BARRIER RAIL. FOR POINTS OF ATTACHMENT, SEE SKETCH.

AFTER INSTALLATION, THE EXPOSED THREAD OF THE BOLT SHALL BE BURRED WITH A SHARP POINTED TOOL.

THE COST OF THE GUARDRAIL ANCHOR ASSEMBLY SHALL BE INCLUDED IN THE UNIT CONTRACT PRICE BID FOR VERTICAL CONCRETE BARRIER RAIL.

THE VERTICAL REINFORCING BARS MAY BE SHIFTED SLIGHTLY IN THE VERTICAL CONCRETE BARRIER RAIL TO CLEAR ASSEMBLY BOLTS.

THE 1 1/4'' Ø HOLES SHALL BE FORMED OR DRILLED WITH A CORE BIT. IMPACT TOOLS WILL NOT BE PERMITTED. ANY CONCRETE DAMAGED BY THIS WORK SHALL BE REPAIRED TO THE SATISFACTION OF THE ENGINEER.

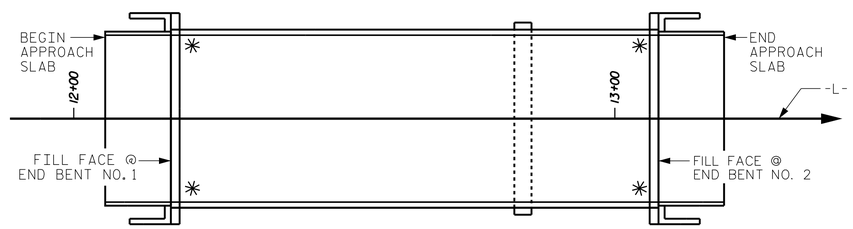

SKETCH SHOWING POINTS OF ATTACHMENT

✳ LOCATION OF GUARDRAIL ATTACHMENT

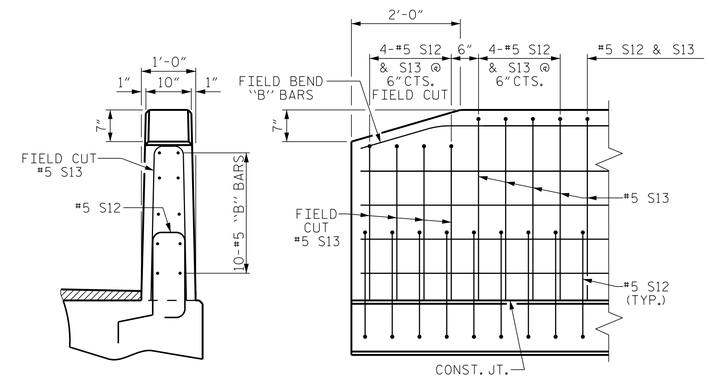

END VIEW

SIDE VIEW

END OF RAIL DETAILS

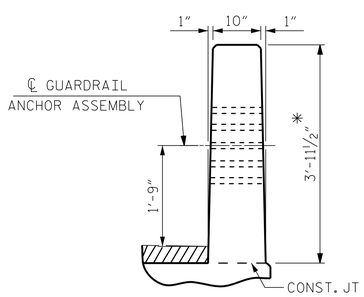

END VIEW

(VERTICAL CONCRETE BARRIER RAIL)

✳ BASED ON 4 3/4" WEARING SURFACE

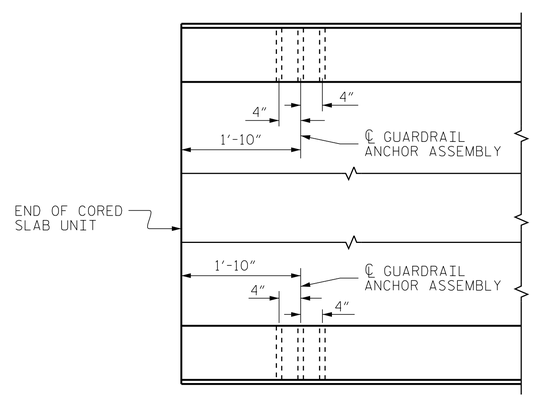

PLAN

(END BENT 1 SHOWN, END BENT 2 SIMILAR)

LOCATION OF GUARDRAIL ANCHOR AT END POST

PROJECT NO. 17BP.7.R.33

GUILFORD COUNTY

STATION: 12+63.00 -L-

REPLACES BRIDGE #400338

NORTH CAROLINA PROFESSIONAL SEAL 035762 ENGINEER JOSEPH J. PICCIRILLI

DocuSigned by: Joseph J Piccirilli 6/15/2015

Kimley-Horn and Associates, Inc.
333 Fayetteville Street, Suite 600
Raleigh, NC 27601-1772
Phone (919) 677-2042
Fax (919) 653-5847
NC LICENSE # F-0102

This document, together with the concepts and designs presented herein, as an instrument of services, is intended only for the specific purpose and client for which it was prepared. Reuse of and improper reliance of this document without written authorization and adoption by Kimley-Horn and Associates, Inc. shall be without liability to Kimley-Horn and Associates, Inc.

Copyright Kimley-Horn and Associates, Inc., 2013

STATE OF NORTH CAROLINA
DEPARTMENT OF TRANSPORTATION
RALEIGH

STANDARD
GUARDRAIL ANCHORAGE DETAILS FOR METAL RAILS & VERTICAL CONCRETE BARRIER RAIL

REVISIONS						SHEET NO.
NO.	BY:	DATE:	NO.	BY:	DATE:	S-9
1			3			TOTAL SHEETS
2			4			18

ASSEMBLED BY : JCW		DATE : 4/13	
CHECKED BY : CRA		DATE : 4/13	
DRAWN BY : MAA	5-10	ADDED 5/6/10	
CHECKED BY : GM	5-10	REV. 10/1/11	MAA/GM
		REV. 12/5/11	MAA/GM

6/15/2015 K:\RDT_Structures_Bridge\NC\17BP Bridges - Group E\01036193_BR400338\Cad\dgn\S-9.dgn

STD. NO. GRA3

DocuSign Envelope ID: 31119006-74F2-42F7-A98A-E2761043138F

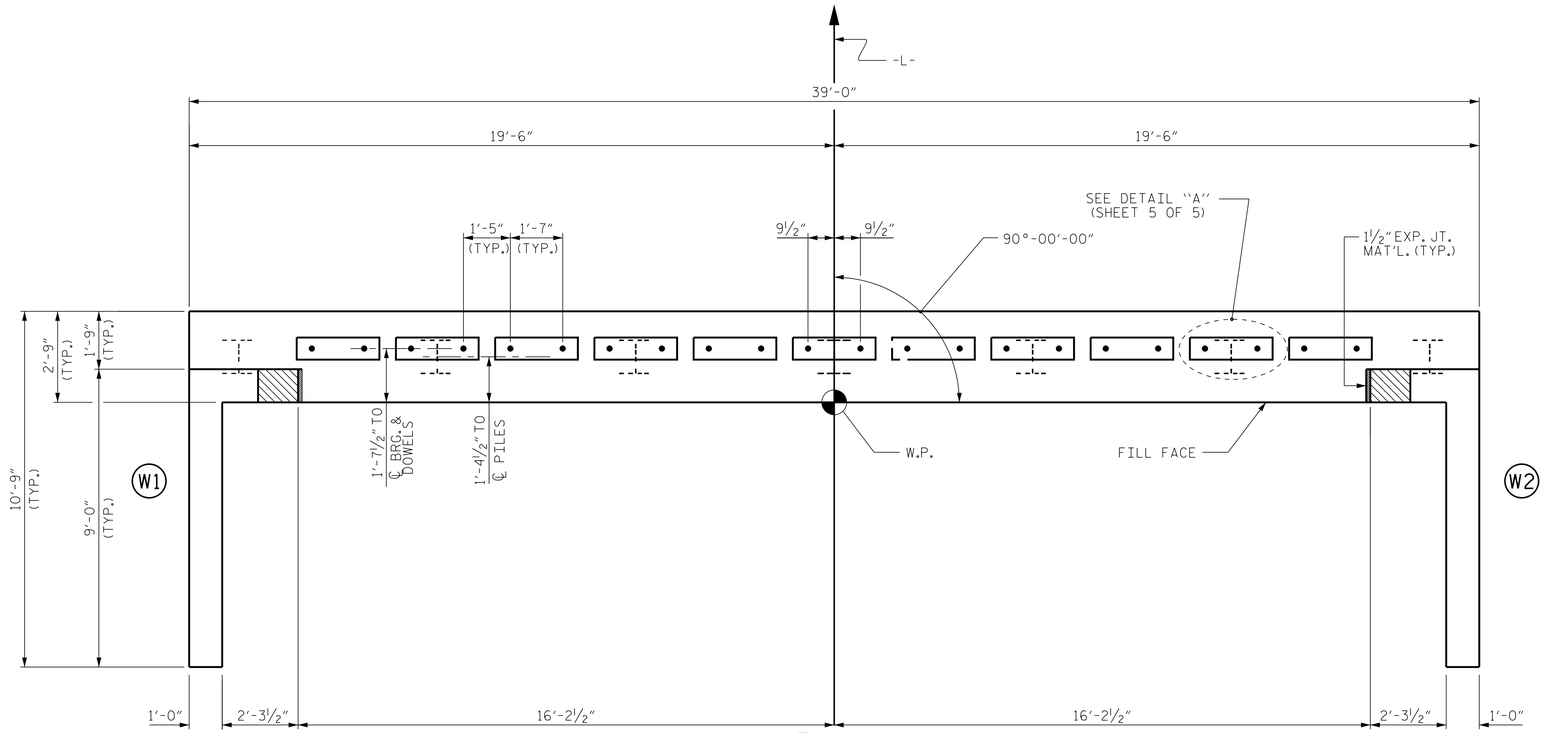

PLAN

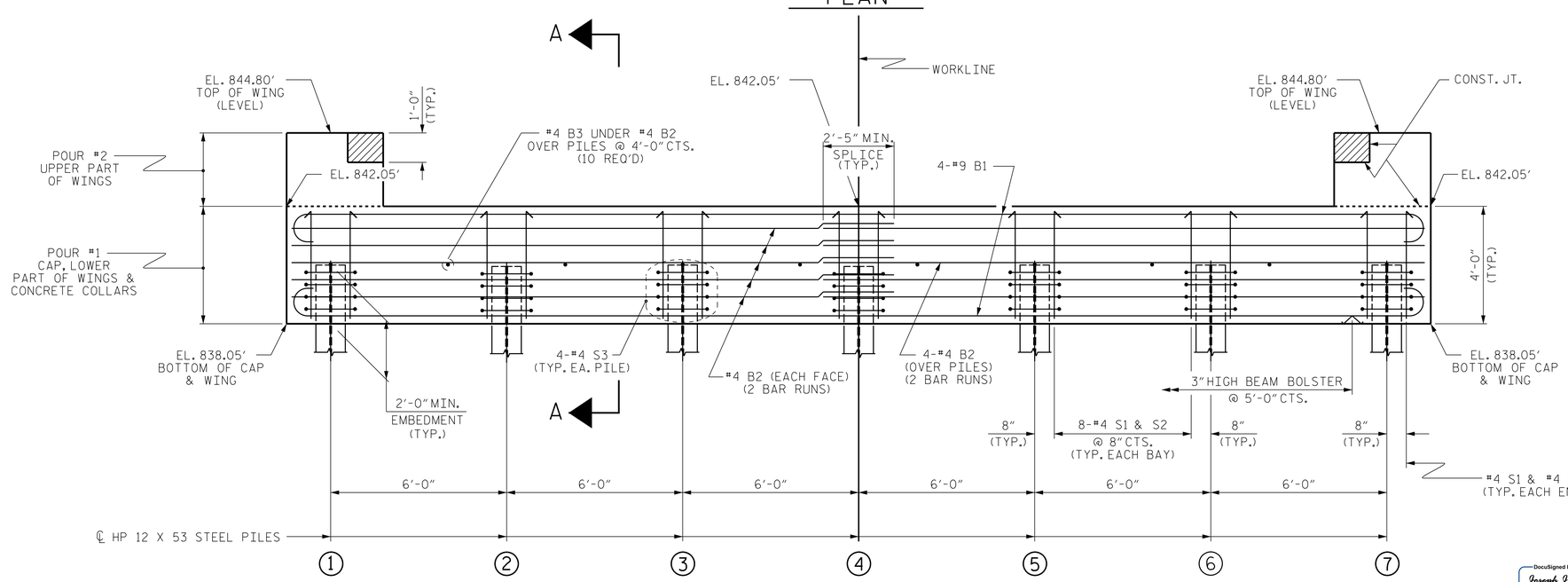

ELEVATION

WINGS NOT SHOWN FOR CLARITY.
FOR SECTION A-A, SEE SHEET 5 OF 5.
CONCRETE COLLARS FOR STEEL PILES NOT SHOWN IN PLAN AND ELEVATION VIEWS FOR CLARITY.
SEE "CORROSION PROTECTION FOR STEEL PILES DETAIL", SHEET 5 OF 5.

NOTES

STIRRUPS IN CAP MAY BE SHIFTED AS NECESSARY TO CLEAR DOWELS.

THE CONCRETE IN THE SHADED AREA OF THE WING SHALL BE POURED AFTER THE VERTICAL CONCRETE BARRIER RAIL IS CAST IF SLIP FORMING IS USED.

FOR PILE SPLICE DETAILS, SEE SHEET 5 OF 5.

FOR WING DETAILS, SEE SHEET 3 OF 5.

PROJECT NO. 17BP.7.R.33
GUILFORD COUNTY
STATION: 12+63.00 -L-

SHEET 1 OF 5 REPLACES BRIDGE #400338

STATE OF NORTH CAROLINA
DEPARTMENT OF TRANSPORTATION
RALEIGH

SUBSTRUCTURE

END BENT No. 1

NORTH CAROLINA PROFESSIONAL SEAL 035762 ENGINEER JOSEPH J. PICCIRILLI

DocuSigned by: Joseph J Piccirilli 6/15/2015
B1B126BEC16C433...

Kimley-Horn and Associates, Inc.
333 Fayetteville Street, Suite 600
Raleigh, NC 27601-1772
Phone (919) 677-2042
Fax (919) 653-5847
NC LICENSE # F-0102

This document, together with the concepts and designs presented herein, as an instrument of services, is intended only for the specific purpose and client for which it was prepared. Reuse of and improper reliance on this document without written consent by Kimley-Horn and Associates, Inc. and Associates, Inc. shall be without liability to Kimley-Horn and Associates, Inc.

Copyright Kimley-Horn and Associates, Inc., 2013

REVISIONS						
NO.	BY:	DATE:	NO.	BY:	DATE:	
1			3			
2			4			

SHEET NO. S-10
TOTAL SHEETS 18

ASSEMBLED BY : JCW DATE : 4/13
CHECKED BY : CRA DATE : 4/13
DRAWN BY : DGE 02/10
CHECKED BY : MKT 02/10

6/15/2015

K:\RDT_Structures_Bridge\NC\17BP Bridges - Group EX\01103613_BR400338\Cad\dgn\S-10.dgn

STD. NO. EB_33_90S4

DocuSign Envelope ID: 31119006-74F2-42F7-A98A-E2761043138F

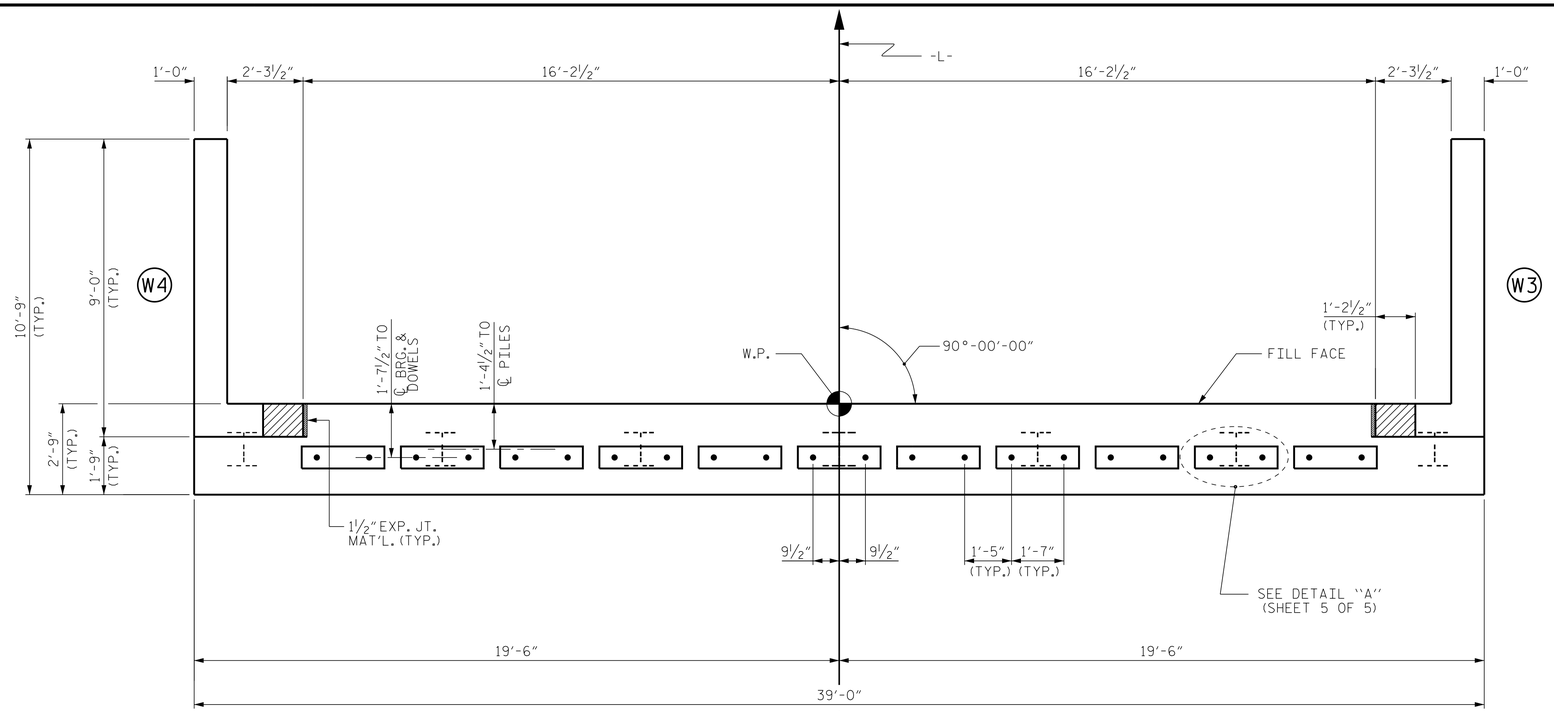

PLAN

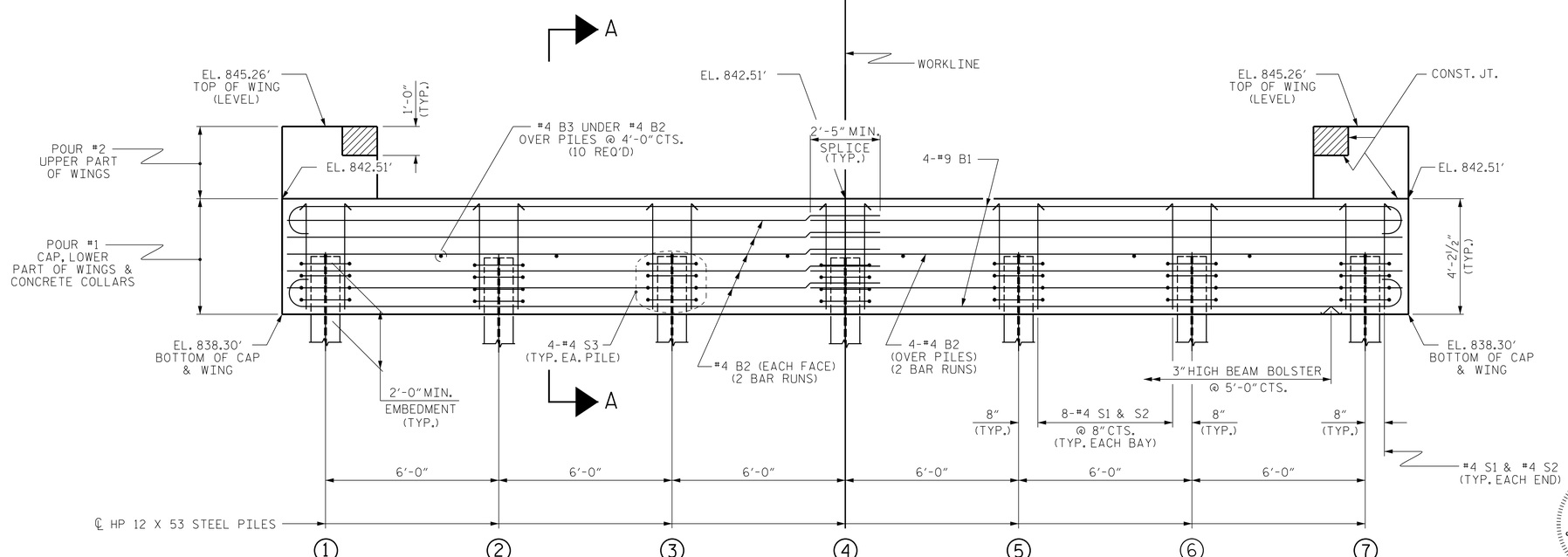

ELEVATION

WINGS NOT SHOWN FOR CLARITY.
FOR SECTION A-A, SEE SHEET 5 OF 5.
CONCRETE COLLARS FOR STEEL PILES NOT SHOWN IN PLAN AND ELEVATION VIEWS FOR CLARITY.
SEE "CORROSION PROTECTION FOR STEEL PILES DETAIL", SHEET 5 OF 5.

NOTES

STIRRUPS IN CAP MAY BE SHIFTED AS NECESSARY TO CLEAR DOWELS.

THE CONCRETE IN THE SHADED AREA OF THE WING SHALL BE POURED AFTER THE VERTICAL CONCRETE BARRIER RAIL IS CAST IF SLIP FORMING IS USED.

FOR PILE SPLICE DETAILS, SEE SHEET 5 OF 5.

FOR WING DETAILS, SEE SHEET 4 OF 5.

PROJECT NO. 17BP.7.R.33
GUILFORD COUNTY
STATION: 12+63.00 -L-

SHEET 2 OF 5 REPLACES BRIDGE #400338

STATE OF NORTH CAROLINA
DEPARTMENT OF TRANSPORTATION
RALEIGH

SUBSTRUCTURE

END BENT No. 2

NORTH CAROLINA PROFESSIONAL SEAL 035762 ENGINEER JOSEPH J. PICCIRILLI
DocuSigned by: Joseph J Piccirilli 5181266EC16C433... 6/15/2015

Kimley-Horn and Associates, Inc.
333 Fayetteville Street, Suite 600
Raleigh, NC 27601-1772
Phone (919) 677-2042
Fax (919) 653-5847
NC LICENSE # F-0102

This document, together with the concepts and designs presented herein, as an instrument of service, is intended only for the specific purpose and client for which it was prepared. Reuse of and improper reliance on this document without written authorization and adoption by Kimley-Horn and Associates, Inc. shall be without liability to Kimley-Horn and Associates, Inc.

Copyright Kimley-Horn and Associates, Inc., 2013

REVISIONS							
NO.	BY:	DATE:	NO.	BY:	DATE:	SHEET NO.	S-11
1			3			TOTAL SHEETS	18
2			4				

ASSEMBLED BY : JCW		DATE :	4/13
CHECKED BY : CRA		DATE :	4/13
DRAWN BY : DGE	02/10		
CHECKED BY : MKT	02/10		

6/15/2015 K:\ROT_Structures_Bridge\NC\17BP Bridges - Group E\01103693_BR400338\Cad\dgn\S-11.dgn

STD. NO. EB_33_90S4

DocuSign Envelope ID: 31119006-74F2-42F7-A98A-E2761043138F

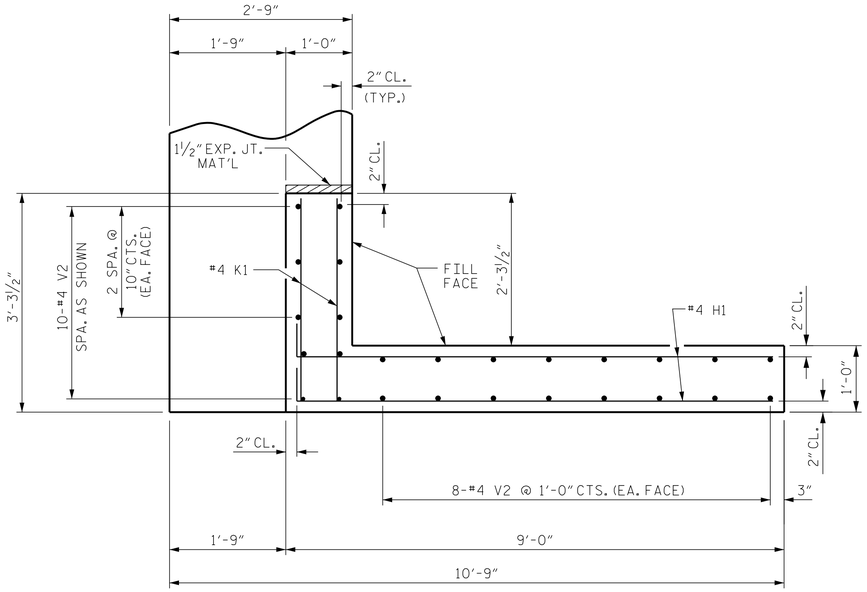

PLAN OF WING (W1)

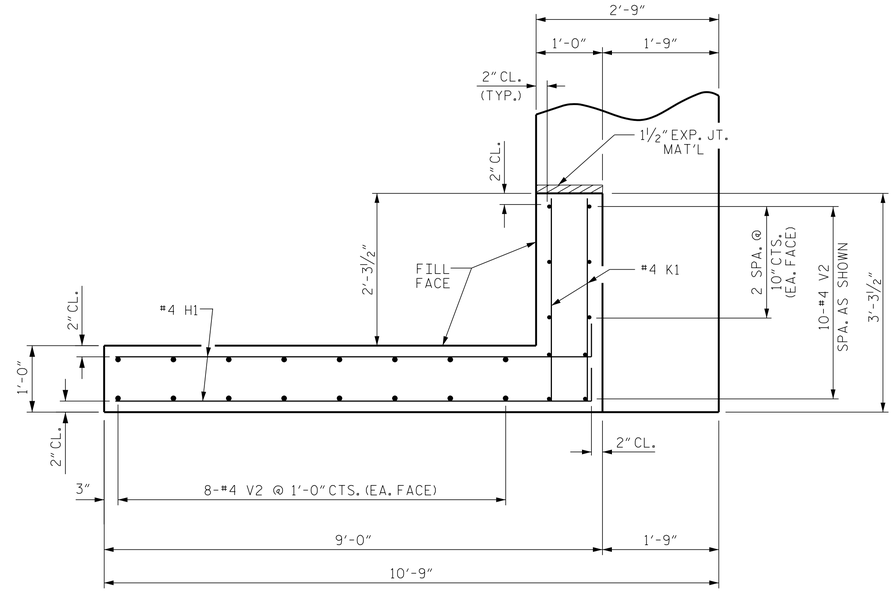

PLAN OF WING (W2)

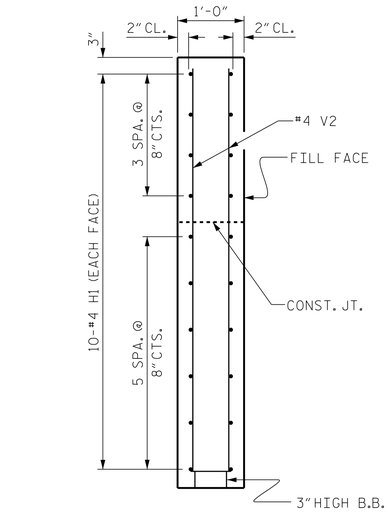

SECTION X-X

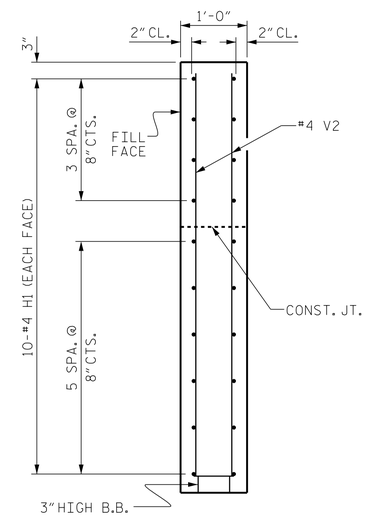

SECTION Y-Y

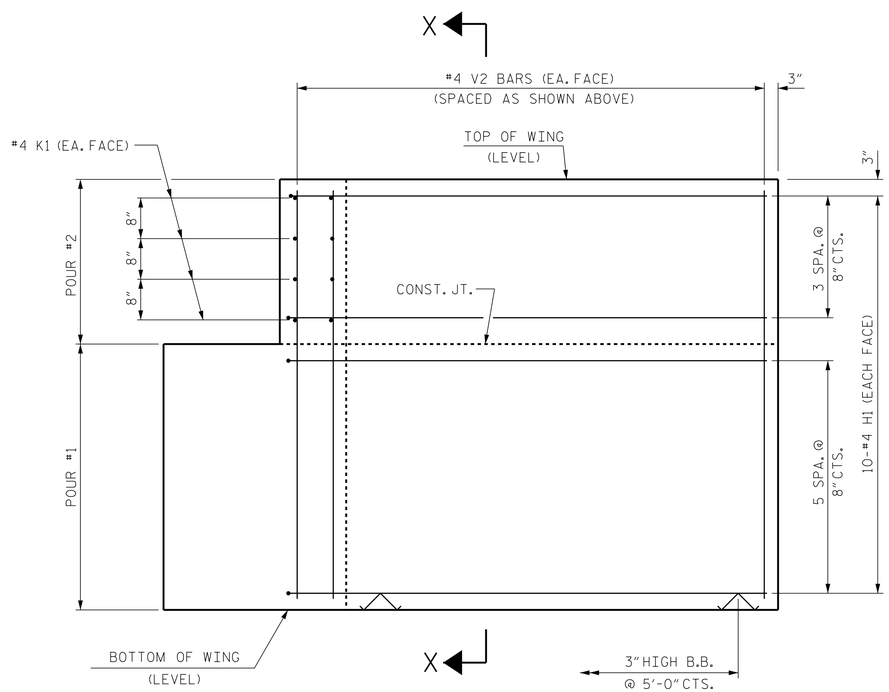

ELEVATION OF WING (W1)

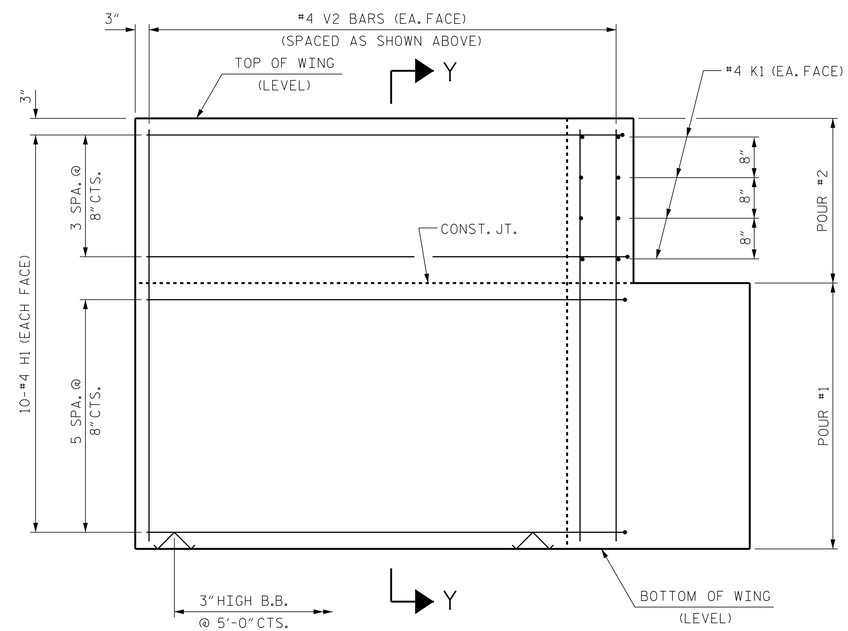

ELEVATION OF WING (W2)

WING DETAILS

PROJECT NO. 17BP.7.R.33

GUILFORD COUNTY

STATION: 12+63.00 -L-

SHEET 3 OF 5 REPLACES BRIDGE #400338

NORTH CAROLINA PROFESSIONAL SEAL 035762 ENGINEER JOSEPH J. PICCIRILLI

DocuSigned by: Joseph J Piccirilli 6/15/2015

Kimley-Horn and Associates, Inc.
333 Fayetteville Street, Suite 600
Raleigh, NC 27601-1772
Phone (919) 677-2042
Fax (919) 653-5847
NC LICENSE # F-0102

This document, together with the concepts and designs presented herein, as an instrument of services, is intended only for the specific purpose and client for which it was prepared. Reuse of and improper reliance of this document without written authorization and adaption by Kimley-Horn and Associates, Inc. shall be without liability to Kimley-Horn and Associates, Inc.
Copyright Kimley-Horn and Associates, Inc., 2013

STATE OF NORTH CAROLINA
DEPARTMENT OF TRANSPORTATION
RALEIGH

SUBSTRUCTURE

END BENT No. 1
WING DETAILS

REVISIONS						SHEET NO.
NO.	BY:	DATE:	NO.	BY:	DATE:	S-12
1			3			TOTAL SHEETS
2			4			18

ASSEMBLED BY : JCW		DATE : 4/13	
CHECKED BY : CRA		DATE : 4/13	
DRAWN BY : DGE	02/10		
CHECKED BY : MKT	02/10		

6/15/2015

k:\RDT_Structures_Bridge\NC\17BP Bridges - Group EV01036193_BR400338\Cad\dgn\S-12.dgn

STD. NO. EB_33_90S4

DocuSign Envelope ID: 31119006-74F2-42F7-A98A-E2761043138F

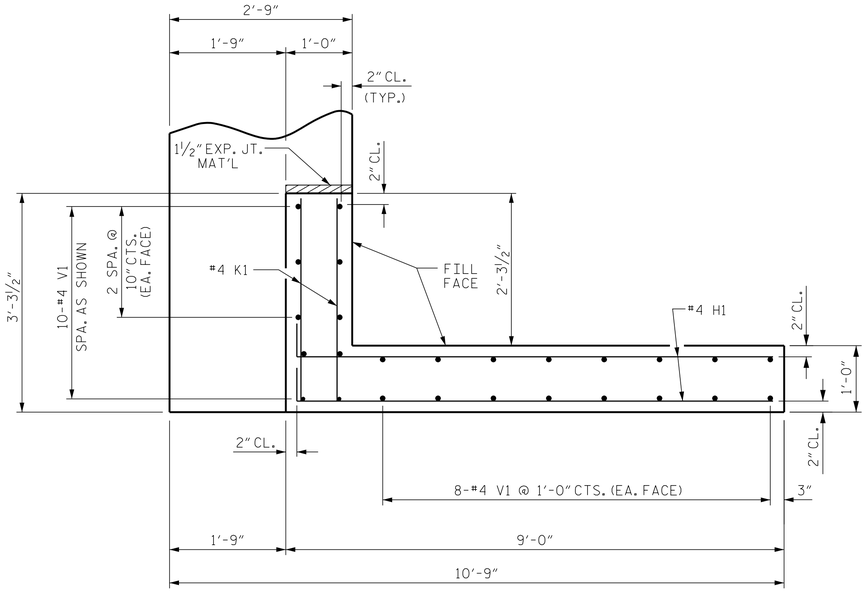

PLAN OF WING (W3)

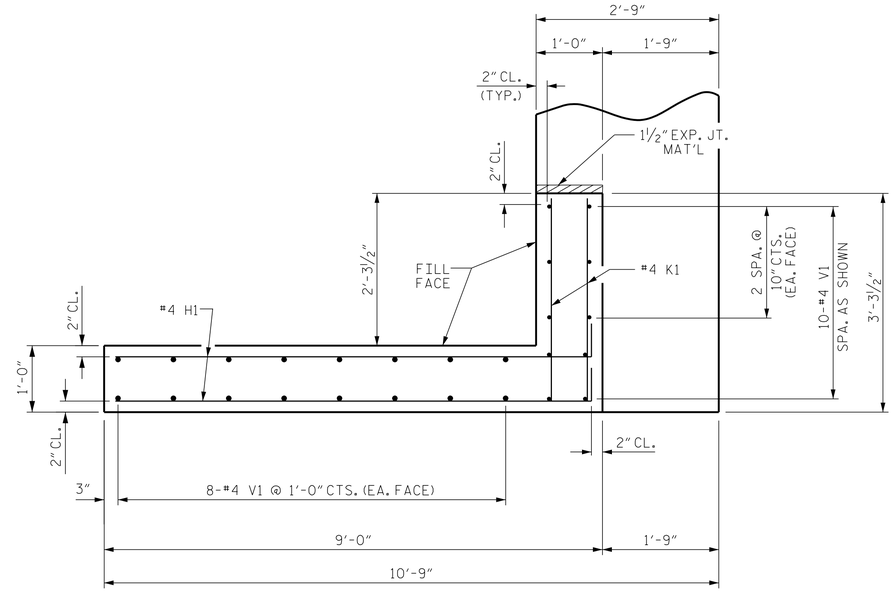

PLAN OF WING (W4)

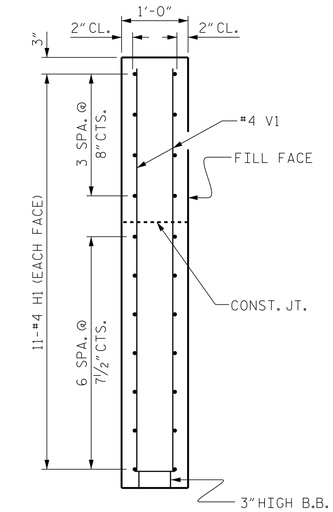

SECTION X-X

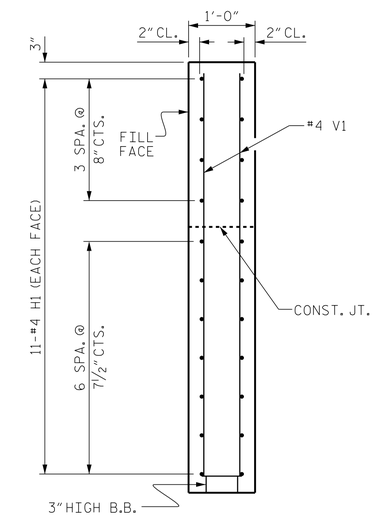

SECTION Y-Y

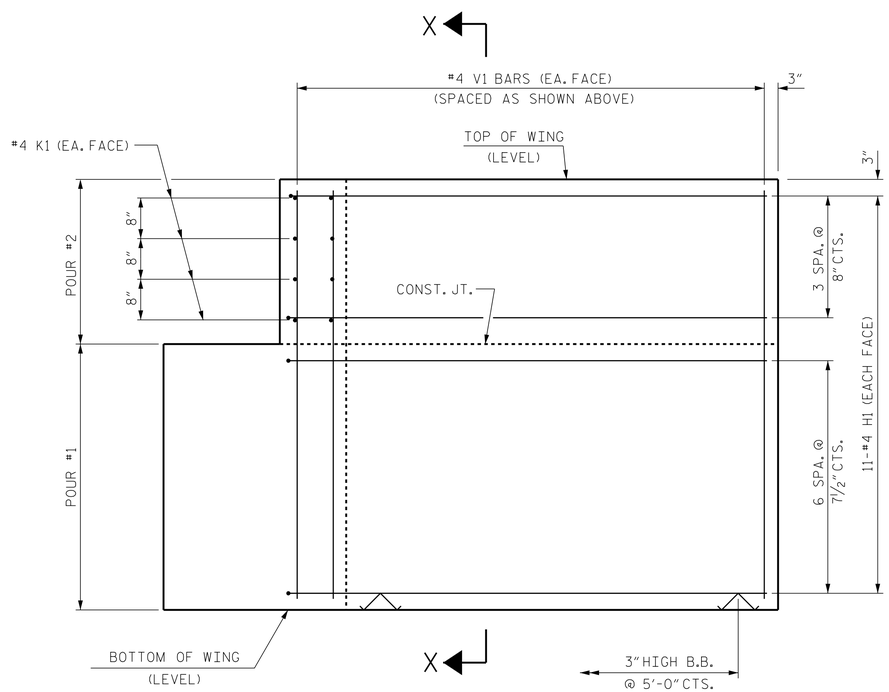

ELEVATION OF WING (W3)

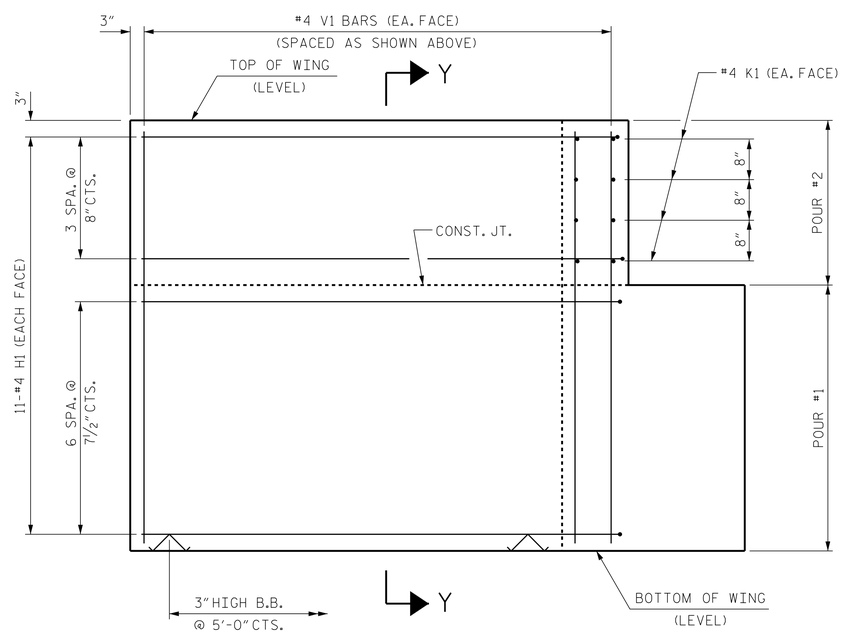

ELEVATION OF WING (W4)

WING DETAILS

PROJECT NO. 17BP.7.R.33

GUILFORD COUNTY

STATION: 12+63.00 -L-

SHEET 4 OF 5 REPLACES BRIDGE #400338

NORTH CAROLINA PROFESSIONAL SEAL 035762 ENGINEER JOSEPH J. PICCIRILLI

DocuSigned by: Joseph J Piccirilli 5181266F0C8C433... 6/15/2015

Kimley-Horn and Associates, Inc.
333 Fayetteville Street, Suite 600
Raleigh, NC 27601-1772
Phone (919) 677-2042
Fax (919) 653-5847
NC LICENSE # F-0102

This document, together with the concepts and designs presented herein, as an instrument of services, is intended only for the specific purpose and client for which it was prepared. Reuse of and improper reliance of this document without written authorization and adoption by Kimley-Horn and Associates, Inc. shall be without liability to Kimley-Horn and Associates, Inc.

Copyright Kimley-Horn and Associates, Inc., 2013

STATE OF NORTH CAROLINA
DEPARTMENT OF TRANSPORTATION
RALEIGH

SUBSTRUCTURE

END BENT No. 2
WING DETAILS

REVISIONS						
NO.	BY:	DATE:	NO.	BY:	DATE:	
1			3			
2			4			

SHEET NO. S-13

TOTAL SHEETS 18

ASSEMBLED BY : JCW	DATE : 4/13	
CHECKED BY : CRA	DATE : 4/13	
DRAWN BY : DGE 02/10		
CHECKED BY : MKT 02/10		

6/15/2015

k:\RDT_Structures_Bridge\NC\17BP Bridges - Group EV01036193_BR400338\Cad\dgn\S-13.dgn

STD. NO. EB_33_90S4

DocuSign Envelope ID: 31119006-74F2-42F7-A98A-E2761043138F

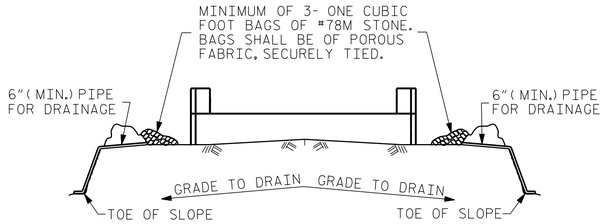

BAGGED STONE AND PIPE SHALL BE PLACED IMMEDIATELY AFTER COMPLETION OF END BENT EXCAVATION. PIPE MAY BE EITHER CONCRETE, CORRUGATED STEEL, CORRUGATED ALUMINUM ALLOY, OR CORRUGATED PLASTIC. PERFORATED PIPE WILL NOT BE ALLOWED.

BAGGED STONE SHALL REMAIN IN PLACE UNTIL THE ENGINEER DIRECTS THAT IT BE REMOVED. THE CONTRACTOR SHALL REMOVE AND DISPOSE OF SILT ACCUMULATIONS AT BAGGED STONE WHEN SO DIRECTED BY THE ENGINEER. BAGS SHALL BE REMOVED AND REPLACED WHENEVER THE ENGINEER DETERMINES THAT THEY HAVE DETERIORATED AND LOST THEIR EFFECTIVENESS.

NO SEPARATE PAYMENT WILL BE MADE FOR THIS WORK AND THE ENTIRE COST OF THIS WORK SHALL BE INCLUDED IN THE UNIT CONTRACT PRICE BID FOR THE SEVERAL PAY ITEMS.

TEMPORARY DRAINAGE AT END BENT

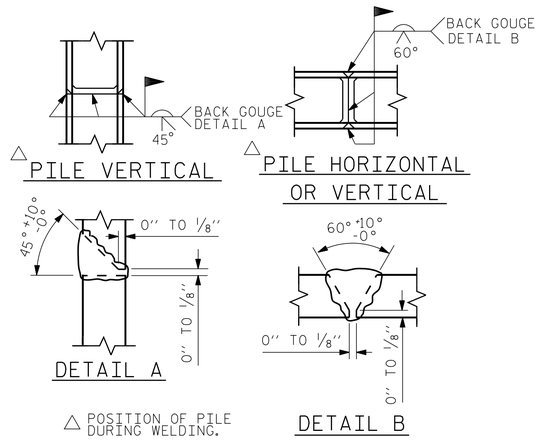

PILE SPLICE DETAILS

BAR TYPES

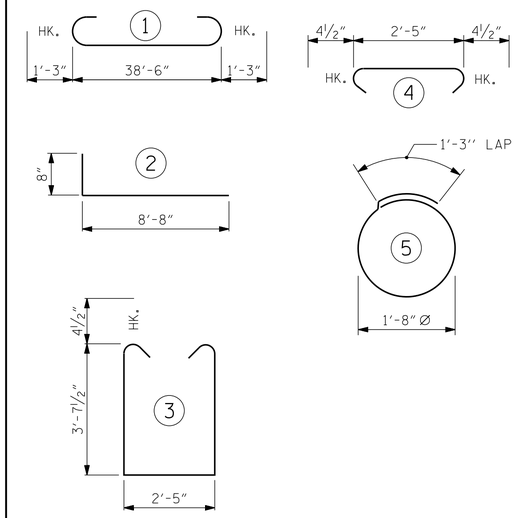

ALL BAR DIMENSIONS ARE OUT TO OUT.

END BENT No. 1	
HP 12 X 53 STEEL PILES	
NO: 7	LIN. FT.= 210

END BENT No. 2	
HP 12 X 53 STEEL PILES	
NO: 7	LIN. FT.= 105

BILL OF MATERIAL FOR END BENT 1

BAR	NO.	SIZE	TYPE	LENGTH	WEIGHT
B1	8	#9	1	41'-0"	1115
B2	28	#4	STR	20'-7"	385
B3	10	#4	STR	2'-5"	16
D1	22	#6	STR	1'-6"	50
H1	40	#4	2	9'-4"	249
K1	16	#4	STR	2'-11"	31
S1	50	#4	3	10'-5"	348
S2	50	#4	4	3'-2"	106
S3	28	#4	5	6'-6"	122
V2	52	#4	STR	6'-5"	223

REINFORCING STEEL (FOR END BENT 1) 2645 LBS.

CLASS A CONCRETE BREAKDOWN (FOR END BENT 1)

POUR #1 CAP, LOWER PART OF WINGS & COLLARS 19.5 C.Y.

POUR #2 UPPER PART OF WINGS 2.3 C.Y.

TOTAL CLASS A CONCRETE 21.8 C.Y.

BILL OF MATERIAL FOR END BENT 2

BAR	NO.	SIZE	TYPE	LENGTH	WEIGHT
B1	8	#9	1	41'-0"	1115
B2	28	#4	STR	20'-7"	385
B3	10	#4	STR	2'-5"	16
D1	22	#6	STR	1'-6"	50
H1	44	#4	2	9'-4"	274
K1	16	#4	STR	2'-11"	31
S1	50	#4	3	10'-5"	348
S2	50	#4	4	3'-2"	106
S3	28	#4	5	6'-6"	122
V1	52	#4	STR	6'-7"	229

REINFORCING STEEL (FOR END BENT 2) 2675 LBS.

CLASS A CONCRETE BREAKDOWN (FOR END BENT 2)

POUR #1 CAP, LOWER PART OF WINGS & COLLARS 20.5 C.Y.

POUR #2 UPPER PART OF WINGS 2.3 C.Y.

TOTAL CLASS A CONCRETE 22.8 C.Y.

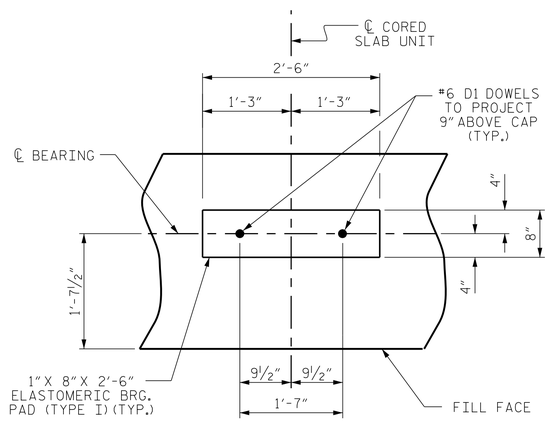

DETAIL "A"

(END BENT No. 1 SHOWN, END BENT No. 2 SIMILAR BY ROTATION)

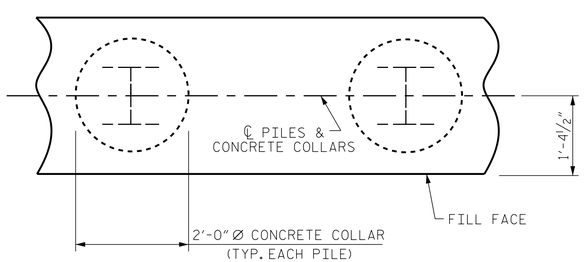

PLAN

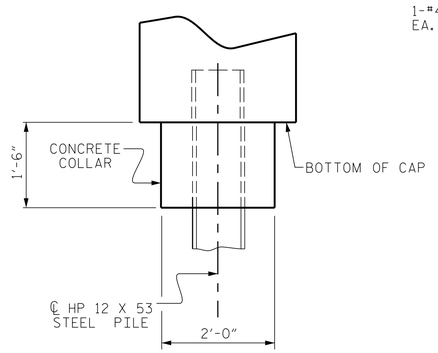

ELEVATION

CORROSION PROTECTION FOR STEEL PILES DETAIL

(END BENT No. 1 SHOWN, END BENT No. 2 SIMILAR BY ROTATION)

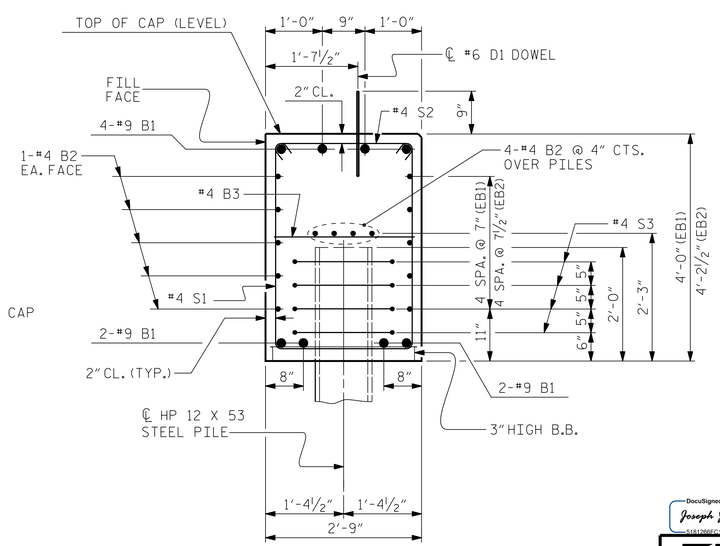

SECTION A-A

(CONCRETE COLLAR NOT SHOWN FOR CLARITY. SEE "CORROSION PROTECTION FOR STEEL PILES DETAIL.")

PROJECT NO. 17BP.7.R.33

GUILFORD COUNTY

STATION: 12+63.00 -L-

SHEET 5 OF 5 REPLACES BRIDGE #400338

STATE OF NORTH CAROLINA
DEPARTMENT OF TRANSPORTATION
RALEIGH

SUBSTRUCTURE

END BENT No. 1 & 2 DETAILS

NORTH CAROLINA PROFESSIONAL SEAL 035762 ENGINEER JOSEPH J. PICCIRILLI

DocuSigned by: Joseph J Piccirilli 6/15/2015

Kimley-Horn and Associates, Inc.
333 Fayetteville Street, Suite 600
Raleigh, NC 27601-1772
Phone (919) 677-2042
Fax (919) 653-5847
NC LICENSE # F-0102

This document, together with the concepts and designs presented herein, as an instrument of service, is intended only for the specific purpose and client for which it was prepared. Reuse of and improper reliance on this document without written authorization and adoption by Kimley-Horn and Associates, Inc. shall be without liability to Kimley-Horn and Associates, Inc.

Copyright Kimley-Horn and Associates, Inc., 2013

REVISIONS						
NO.	BY:	DATE:	NO.	BY:	DATE:	SHEET NO. S-14
1			3			TOTAL SHEETS 18
2			4			

ASSEMBLED BY : JCW		DATE : 4/13	
CHECKED BY : CRA		DATE : 4/13	
DRAWN BY : DGE	02/10		
CHECKED BY : MKT	02/10		

6/15/2015 K:\ROT_Structures_Bridge\NC\17BP Bridges - Group E\01I036193_BR400338\Cad\dgn\S-14.dgn

STD. NO. EB_33_90S4

DocuSign Envelope ID: 31119006-74F2-42F7-A98A-E2761043138F

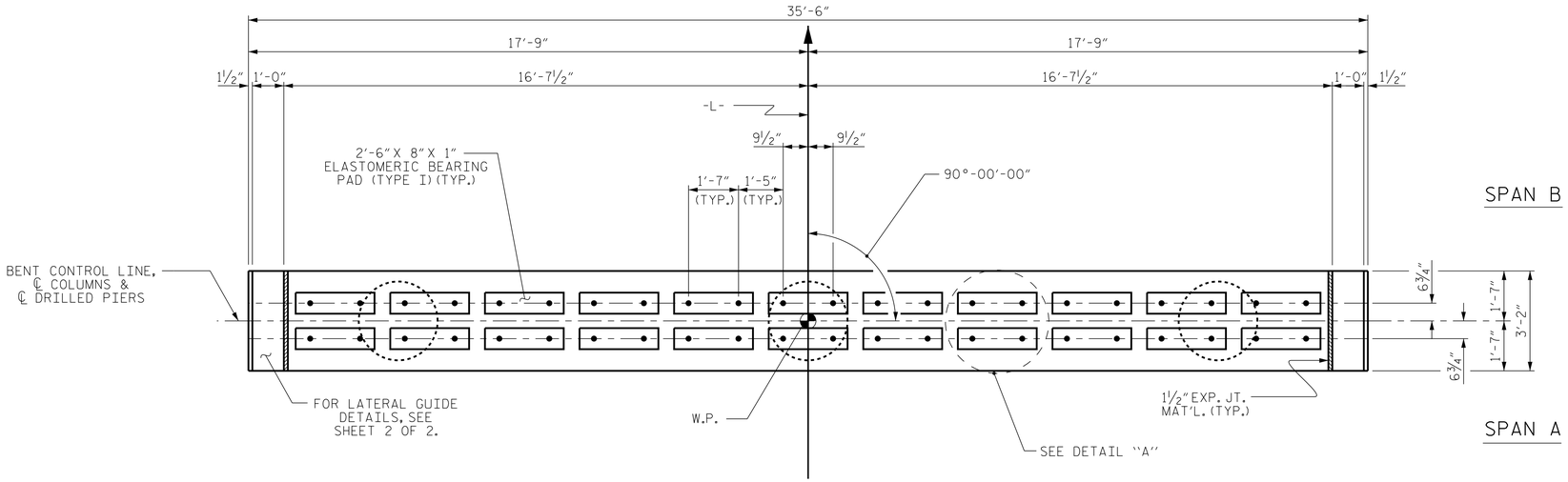

PLAN

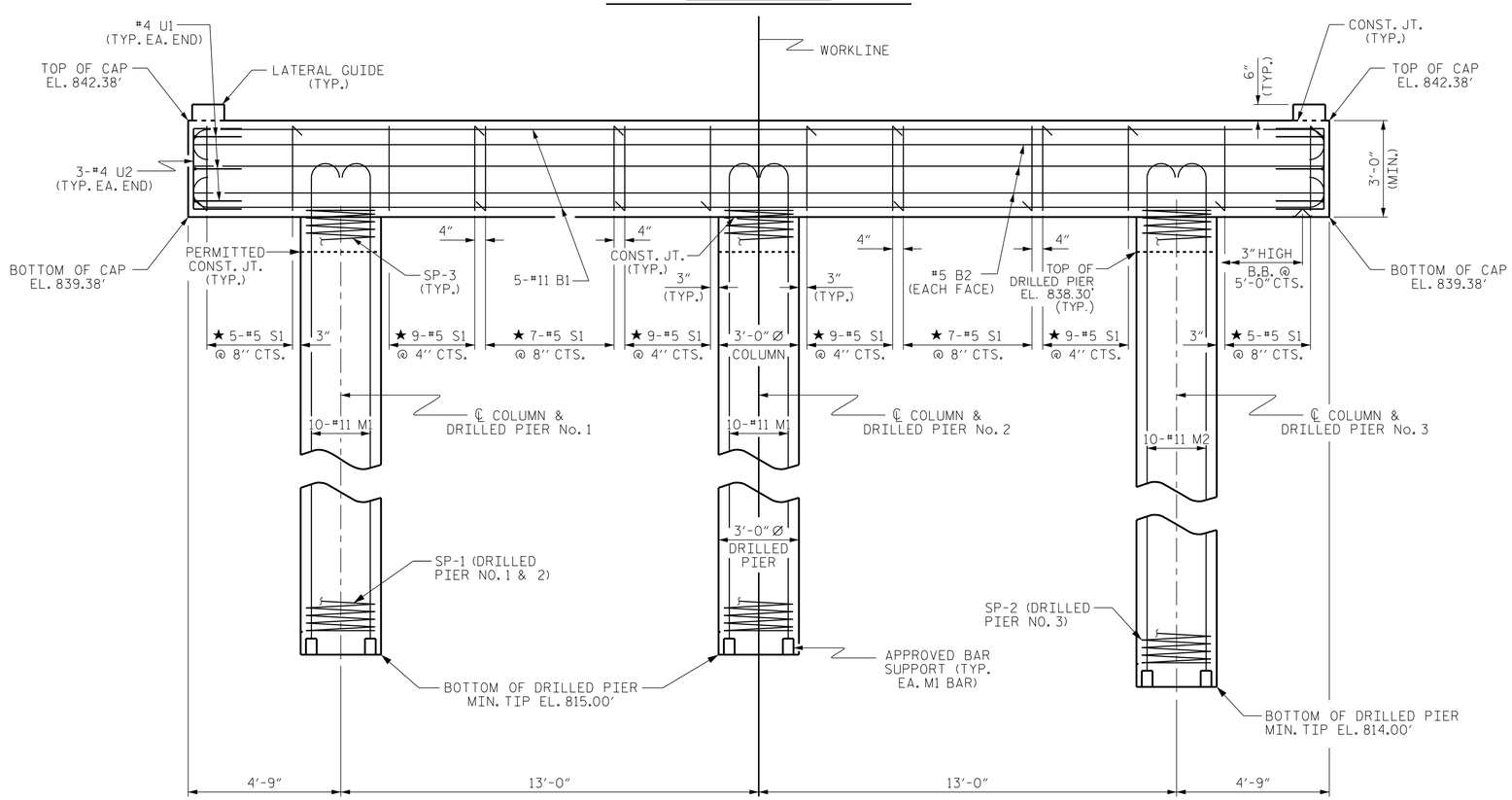

ELEVATION

DIMENSIONS & REINFORCING STEEL ARE TYPICAL FOR EACH COLUMN & DRILLED PIER UNLESS OTHERWISE NOTED.

NOTES

STIRRUPS IN CAP MAY BE SHIFTED AS NECESSARY TO CLEAR DOWELS.

HOOKS ON "V" BARS MAY BE TURNED AS NECESSARY FOR PLACING REINFORCING STEEL.

FOR DRILLED PIERS, SEE SPECIAL PROVISIONS.

ALL STEEL IN THE DRILLED PIERS IS INCLUDED IN THE PAY ITEMS FOR "REINFORCING STEEL" AND "SPIRAL COLUMN REINFORCING STEEL."

THE LATERAL GUIDES ARE NOT TO BE POURED UNTIL AFTER THE CORED SLAB UNITS ARE IN PLACE.

★ INVERT ALTERNATE STIRRUPS.

THE LOCATION OF THE CONSTRUCTION JOINT IN THE DRILLED PIERS IS BASED ON AN APPROXIMATE GROUND LINE ELEVATION. IF THE CONSTRUCTION JOINT IS ABOVE THE ACTUAL GROUND LINE ELEVATION, THE CONTRACTOR SHALL PLACE THE CONSTRUCTION JOINT ONE FOOT BELOW THE GROUND LINE.

FOR PERMANENT STEEL CASING, SEE DRILLED PIER SPECIAL PROVISIONS.

THE CONTRACTOR HAS THE OPTION TO OMIT THE LATERAL GUIDE IF APPROVED BY THE ENGINEER.

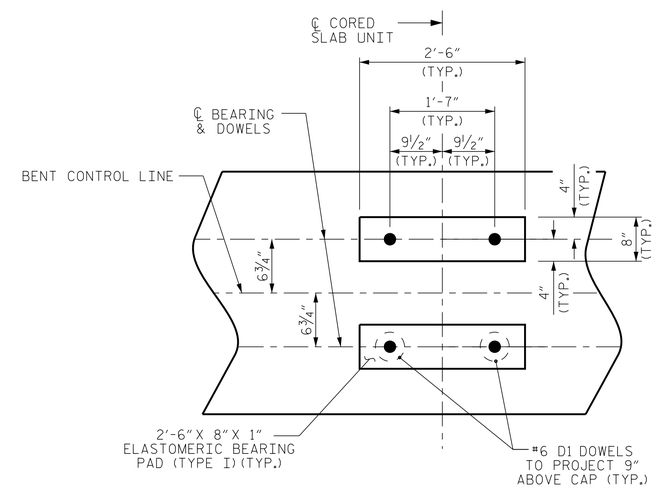

DETAIL "A"

(DIMENSIONS ARE TYPICAL EACH BEARING)

PROJECT NO. 17BP.7.R.33

GUILFORD COUNTY

STATION: 12+63.00 -L-

SHEET 1 OF 2 REPLACES BRIDGE #400338

NORTH CAROLINA PROFESSIONAL SEAL 035762 ENGINEER JOSEPH J. PICCIRILLI

DocuSigned by: Joseph J Piccirilli 6/15/2015

518126EEC16C433

Kimley-Horn and Associates, Inc.
333 Fayetteville Street, Suite 600
Raleigh, NC 27601-1772
Phone (919) 677-2042
Fax (919) 653-5847
NC LICENSE # F-0102

This document, together with the concepts and designs presented herein, as an instrument of services, is intended only for the specific purpose and client for which it was prepared. Reuse of and improper reliance of this document without written authorization and adaption by Kimley-Horn and Associates, Inc. shall be without liability to Kimley-Horn and Associates, Inc.

Copyright Kimley-Horn and Associates, Inc., 2013

STATE OF NORTH CAROLINA
DEPARTMENT OF TRANSPORTATION
RALEIGH

SUBSTRUCTURE

BENT No. 1

REVISIONS						
NO.	BY:	DATE:	NO.	BY:	DATE:	
1			3			
2			4			

SHEET NO. S-15

TOTAL SHEETS 18

ASSEMBLED BY : JCW	DATE : 4/13	
CHECKED BY : CRA	DATE : 4/13	
DRAWN BY : DGE	03/10	
CHECKED BY : MKT	03/10	

K:\RDT_Structures_Bridge\NC\17BP Bridges - Group EV01\036193_BR400338\Cad\dgn\S-15.dgn

6/15/2015

STD. NO. DP_BT_33_90S_<50'

DocuSign Envelope ID: 31119006-74F2-42F7-A98A-E2761043138F

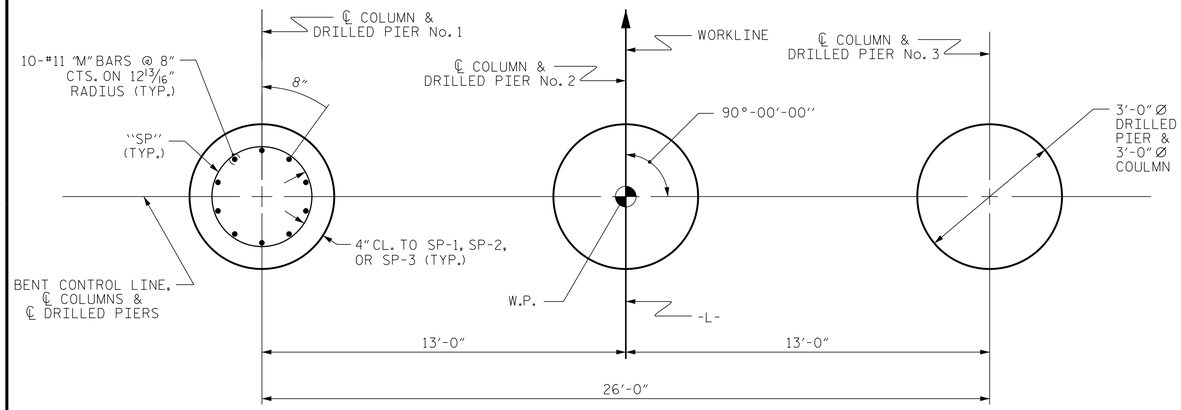

PLAN OF DRILLED PIERS & COLUMNS

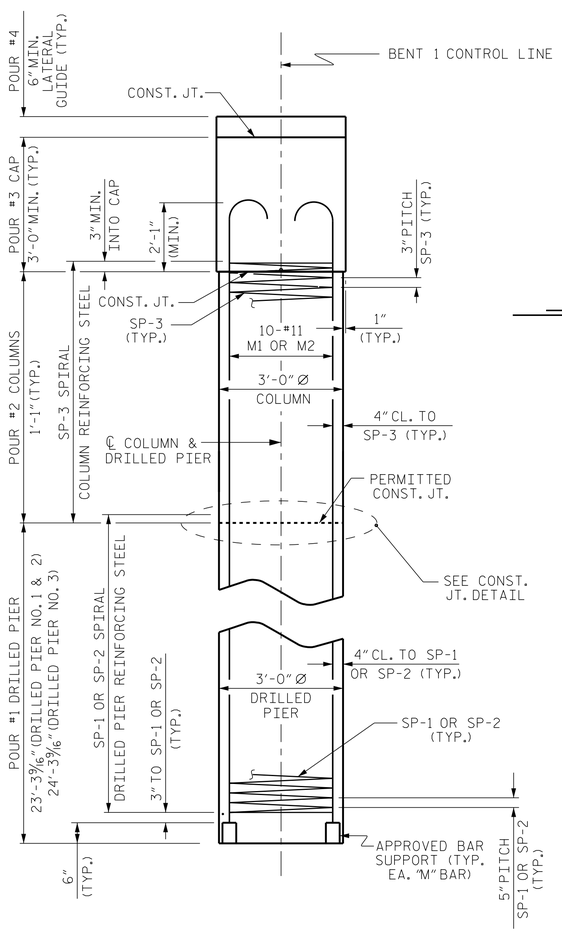

END ELEVATION

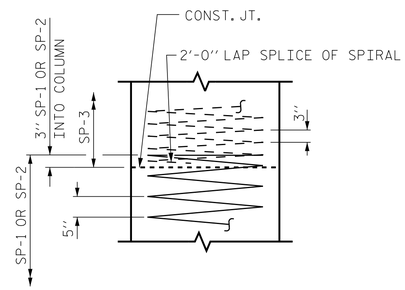

CONSTRUCTION JOINT DETAIL

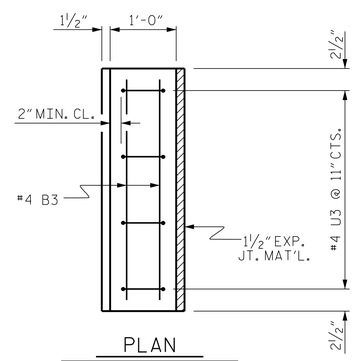

PLAN

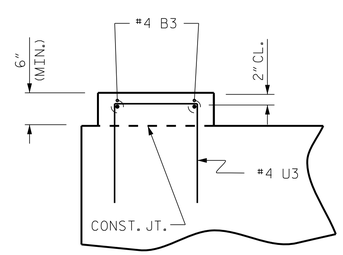

ELEVATION

LATERAL GUIDE DETAILS

(LEFT LATERAL GUIDE SHOWN, RIGHT SIDE SIMILAR)

BAR TYPES

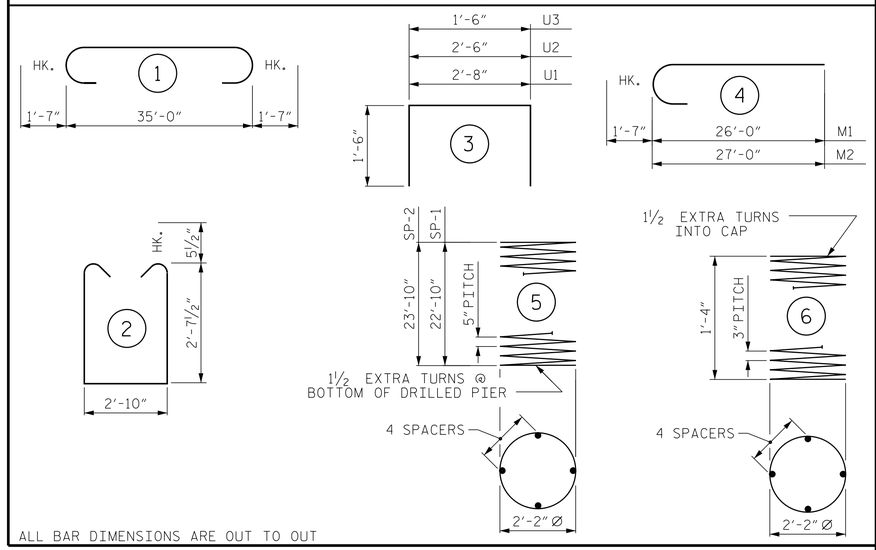

ALL BAR DIMENSIONS ARE OUT TO OUT

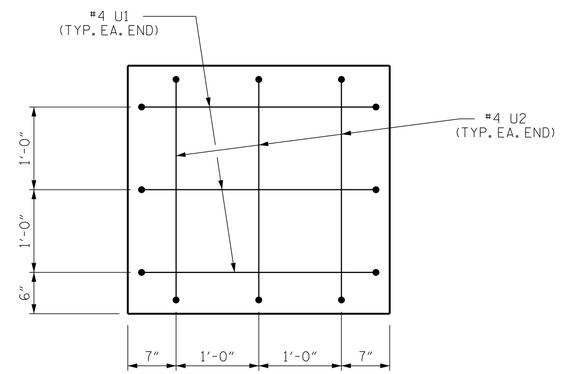

END OF CAP VIEW

(TYPICAL BOTH ENDS)

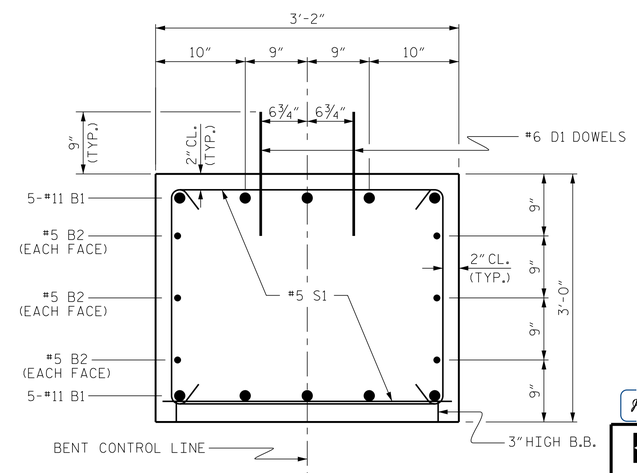

SECTION THRU CAP

BILL OF MATERIAL

FOR ONE BENT

BAR	NO.	SIZE	TYPE	LENGTH	WEIGHT
B1	10	#11	1	38'-2"	2028
B2	6	#5	STR	35'-2"	220
B3	4	#4	STR	2'-10"	8
D1	44	#6	STR	1'-6"	99
M1	20	#11	4	27'-7"	2931
M2	10	#11	4	28'-7"	1519
S1	60	#5	2	9'-0"	563
U1	6	#4	3	5'-8"	23
U2	6	#4	3	5'-6"	22
U3	8	#4	3	3'-6"	19

REINFORCING STEEL (FOR ONE BENT) 7,431 LBS.

SP-1	2	✳	5	466'-2"	973
SP-2	1	✳	5	482'-8"	504
SP-3	3	✳✳	6	57'-9"	116

SPIRAL COLUMN REINFORCING STEEL (FOR ONE BENT) 1,593 LBS.

✳ THE SP-1 AND SP-2 SPIRAL REINFORCING STEEL SHALL BE W31 OR D-31 COLD DRAWN WIRE OR #5 PLAIN OR DEFORMED BAR

✳✳ THE SP-3 SPIRAL REINFORCING STEEL SHALL BE W20 OR D-20 COLD DRAWN WIRE OR #4 PLAIN OR DEFORMED BAR

CLASS A CONCRETE BREAKDOWN (FOR ONE BENT)

POUR #2 (COLUMNS)	0.9 C.Y.
POUR #3 (CAP)	12.5 C.Y.
TOTAL CLASS A CONCRETE	13.4 C.Y.

DRILLED PIERS: (FOR ONE BENT)

DRILLED PIER CONCRETE
POUR #1 (DRILLED PIERS) 18.6 C.Y.

3'-0" Ø DRILLED PIER NOT IN SOIL 19 LIN. FT.

3'-0" Ø DRILLED PIER IN SOIL 52 LIN. FT.

PERMANENT STEEL CASING FOR 3'-0" Ø DRILLED PIER 0 LIN. FT.

CSL TUBES 302 LIN. FT.

PROJECT NO. 17BP.7.R.33
GUILFORD COUNTY
STATION: 12+63.00 -L-

SHEET 2 OF 2 REPLACES BRIDGE #400338

STATE OF NORTH CAROLINA
DEPARTMENT OF TRANSPORTATION
RALEIGH

SUBSTRUCTURE

BENT No. 1

NORTH CAROLINA PROFESSIONAL SEAL 035762 ENGINEER JOSEPH J. PICCIRILLI

DocuSigned by: Joseph J Piccirilli 6/15/2015
51812666C18C433

Kimley-Horn and Associates, Inc.
333 Fayetteville Street, Suite 600
Raleigh, NC 27601-1772
Phone (919) 677-2042
Fax (919) 653-5847
NC LICENSE # F-0102

This document, together with the concepts and designs presented herein, as an instrument of services, is intended only for the specific purpose and client for which it was prepared. Reuse of and improper reliance on this document without written authorization and adaptation by Kimley-Horn and Associates, Inc. shall be without liability to Kimley-Horn and Associates, Inc.
Copyright Kimley-Horn and Associates, Inc., 2013

REVISIONS						
NO.	BY:	DATE:	NO.	BY:	DATE:	SHEET NO. S-16
1			3			TOTAL SHEETS 18
2			4			

ASSEMBLED BY : JCW DATE : 4/13
CHECKED BY : CRA DATE : 4/13
DRAWN BY : DGE 03/10
CHECKED BY : MKT 03/10

6/15/2015
K:\RDT_Structures_Bridge\NC\17BP Bridges - Group E\01036193.BR400338\Cad\dgn\S-16.dgn

STD. NO. DP_BT_33_90S_<50'

DocuSign Envelope ID: 31119006-74F2-42F7-A98A-E2761043138F

NOTES :

FOR BERM WIDTH DIMENSIONS, SEE GENERAL DRAWING.

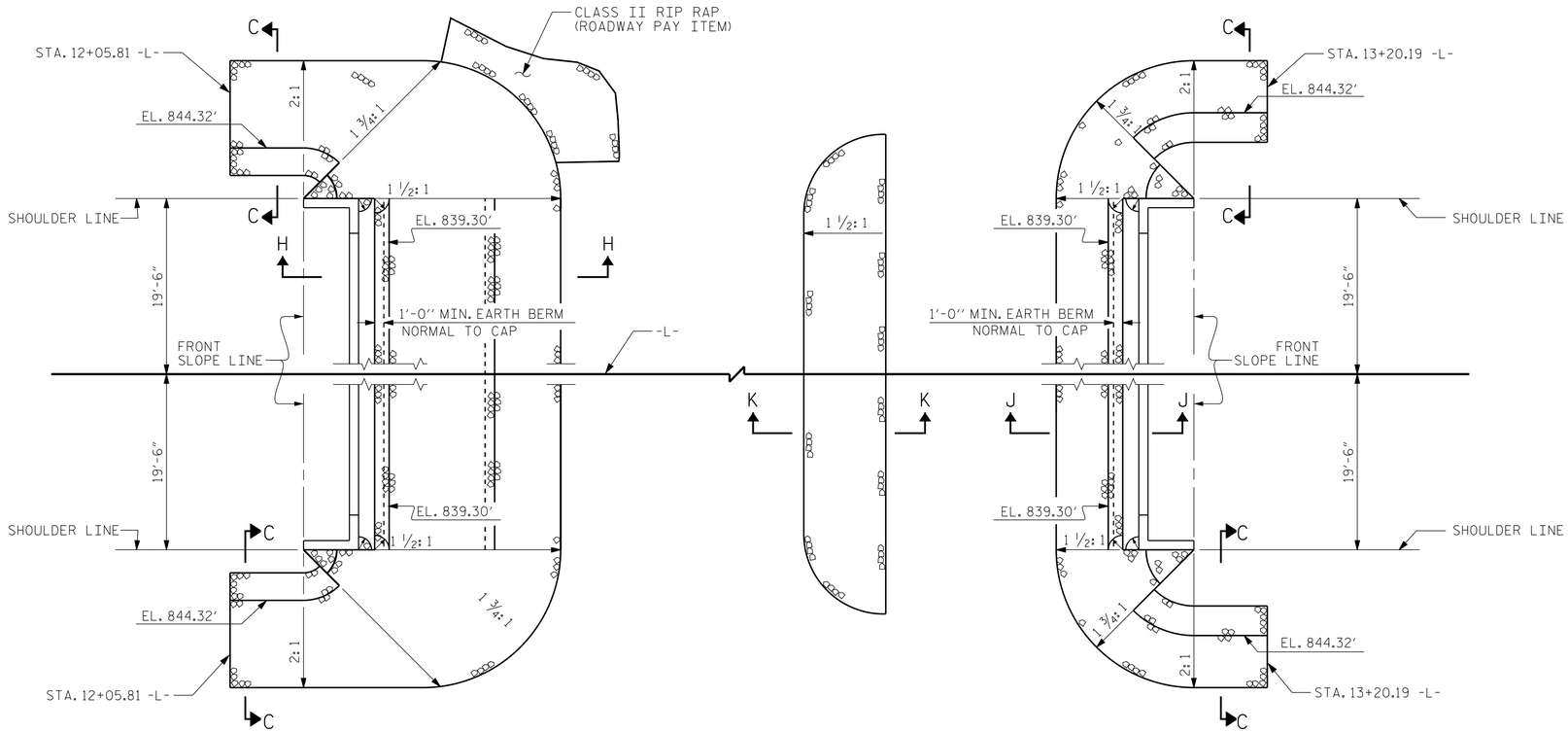

END BENT No. 1

END BENT No. 2

ESTIMATED QUANTITIES		
BRIDGE @ STA. 12+63.00 -L-	RIP RAP CLASS II (2'-0" THICK)	GEOTEXTILE FOR DRAINAGE
	TONS	SQUARE YARDS
END BENT 1	125	135
BENT 1	20	20
END BENT 2	62	70
TOTAL	207	225

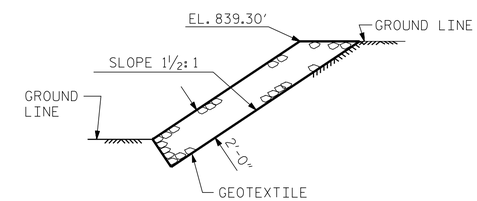

SECTION K-K

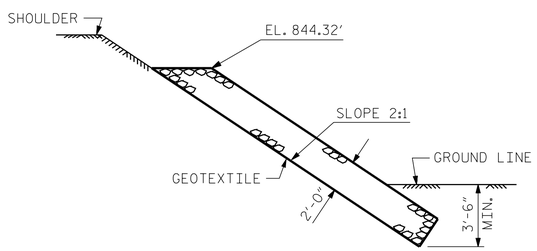

SECTION C-C

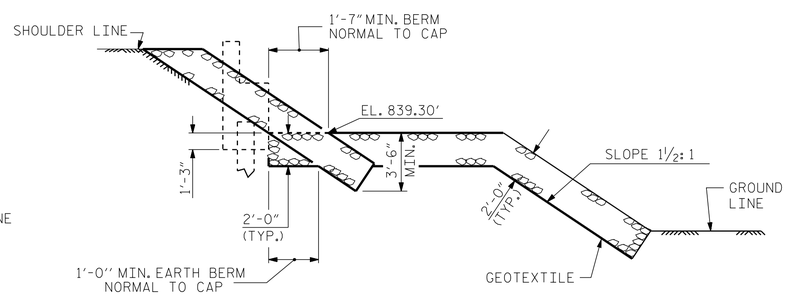

SECTION H-H

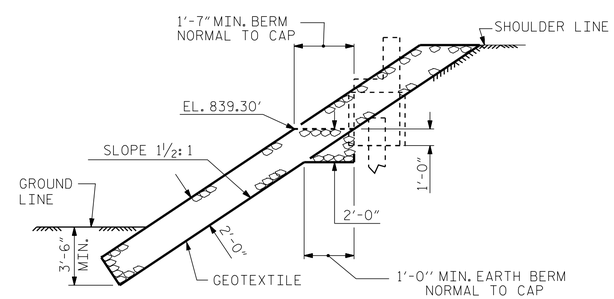

SECTION J-J

PROJECT NO. 17BP.7.R.33

GUILFORD COUNTY

STATION: 12+63.00 -L-

REPLACES BRIDGE #400338

STATE OF NORTH CAROLINA
DEPARTMENT OF TRANSPORTATION
RALEIGH

STANDARD

RIP RAP DETAILS

NORTH CAROLINA PROFESSIONAL SEAL 035762 ENGINEER JOSEPH J. PICCIRILLI

DocuSigned by: Joseph J Piccirilli 6/15/2015
518126EEC16C433

Kimley-Horn and Associates, Inc.
333 Fayetteville Street, Suite 600
Raleigh, NC 27601-1772
Phone (919) 677-2042
Fax (919) 653-5847
NC LICENSE # F-0102

This document, together with the concepts and designs presented herein, as an instrument of services, is intended only for the specific purpose and client for which it was prepared. Reuse of and improvements to this document without written authorization and adaption by Kimley-Horn and Associates, Inc. shall be without liability to Kimley-Horn and Associates, Inc.

Copyright Kimley-Horn and Associates, Inc., 2013

REVISIONS						
NO.	BY:	DATE:	NO.	BY:	DATE:	
1			3			
2			4			

SHEET NO. S-17

TOTAL SHEETS 18

STD. NO. RR1

ASSEMBLED BY : JCW		DATE : 4/13	
CHECKED BY : CRA		DATE : 4/13	
DRAWN BY : REK	1/84	REV. 5/1/06R	TLA/GM
CHECKED BY : RDU	1/84	REV. 10/1/11	MAA/GM
		REV. 12/21/11	MAA/GM

6/15/2015 k:\RDT_Structures_Bridge\NC\17BP Bridges - Group EV011036193.BR400338\Cad\dgn\S-17.dgn

DocuSign Envelope ID: 31119006-74F2-42F7-A98A-E2761043138F

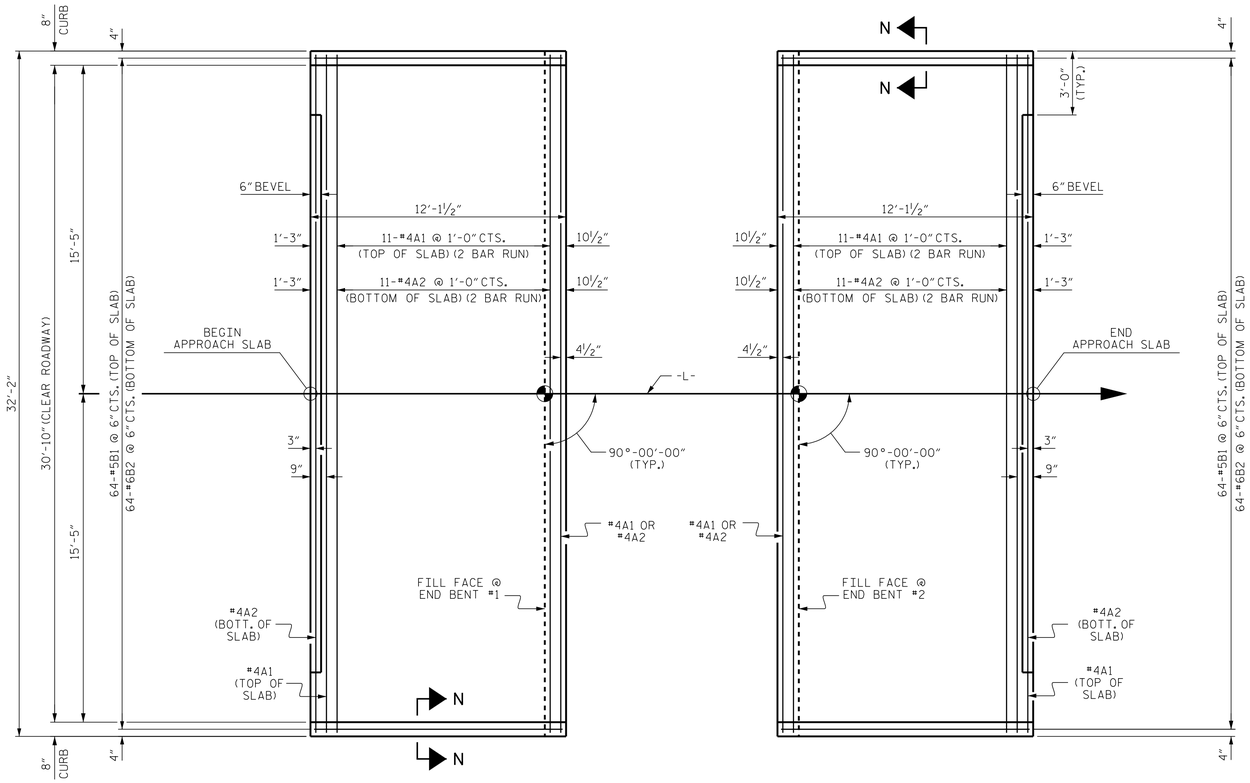

PLAN @ END BENT NO. 1

PLAN @ END BENT NO. 2

DIMENSIONS SHOWN ARE TYPICAL FOR BOTH APPROACH SLABS

NOTES

FOR BRIDGE APPROACH FILL INCLUDING GEOTEXTILE, 4" Ø DRAINAGE PIPE, AND #78M STONE BACKFILL, SEE ROADWAY PLANS.

GEOTEXTILE SHALL BE TYPE 1IN ACCORDANCE WITH THE STANDARD SPECIFICATIONS SECTION 1056.

#78M STONE BACKFILL (CLASS V SELECT MATERIAL) SHALL BE IN ACCORDANCE WITH STANDARD SPECIFICATIONS SECTION 1016.

#78M STONE BACKFILL IS TO BE CONTINUOUS ALONG FILL FACE OF BACKWALL FROM OUTSIDE EDGE TO OUTSIDE EDGE OF APPROACH SLAB.

FOR THE 4" Ø DRAINAGE PIPE OUTLET(S), SEE ROADWAY STANDARD DRAWINGS.

AREA BETWEEN THE WINGWALL AND APPROACH SLAB SHALL BE GRADED TO DRAIN THE WATER AWAY FROM THE FILL FACE OF THE BRIDGE AND SHALL BE PAVED. SEE ROADWAY PLANS.

APPROACH SLAB GROOVING IS NOT REQUIRED.

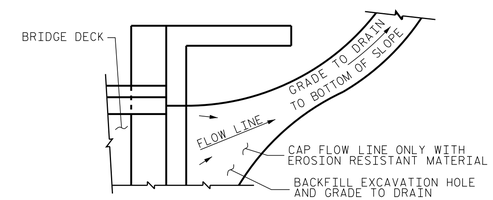

NOTE: IF THE APPROACH SLAB IS NOT CONSTRUCTED IMMEDIATELY AFTER THE BACKFILLING OF THE END BENT EXCAVATION, GRADE TO DRAIN TO THE BOTTOM OF THE SLOPE AND PROVIDE EROSION RESISTANT MATERIAL, SUCH AS FIBERGLASS ROVING OR AS DIRECTED BY THE ENGINEER TO PREVENT SOIL EROSION AND TO PROTECT THE AREA ADJACENT TO THE STRUCTURE. THE CONTRACTOR WILL BE REQUIRED TO REMOVE THESE MATERIALS PRIOR TO CONSTRUCTION OF THE APPROACH SLAB.

BILL OF MATERIAL

APPROACH SLAB AT EB #1

BAR	NO.	SIZE	TYPE	LENGTH	WEIGHT
* A1	26	#4	STR	16'-11"	294
A2	26	#4	STR	16'-9"	291
* B1	64	#5	STR	11'-2"	745
B2	64	#6	STR	11'-8"	1121
REINFORCING STEEL				LBS.	1412
* EPOXY COATED REINFORCING STEEL				LBS.	1039
CLASS AA CONCRETE				C. Y.	19.9

APPROACH SLAB AT EB #2

BAR	NO.	SIZE	TYPE	LENGTH	WEIGHT
* A1	26	#4	STR	16'-11"	294
A2	26	#4	STR	16'-9"	291
* B1	64	#5	STR	11'-2"	745
B2	64	#6	STR	11'-8"	1121
REINFORCING STEEL				LBS.	1412
* EPOXY COATED REINFORCING STEEL				LBS.	1039
CLASS AA CONCRETE				C. Y.	19.9

TEMPORARY DRAINAGE DETAIL

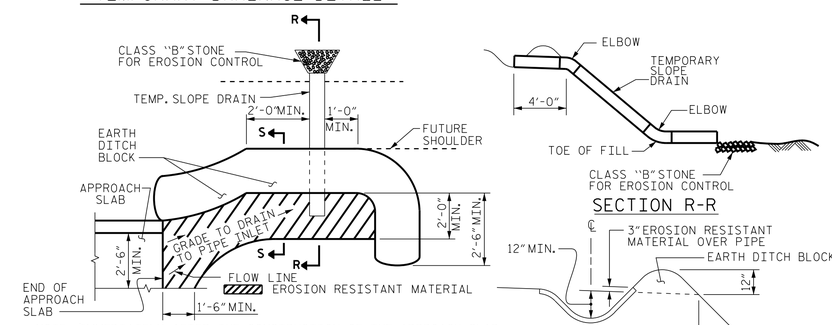

NOTE: IMMEDIATELY AFTER THE CONSTRUCTION OF THE APPROACH SLAB, THE CONTRACTOR SHALL PROVIDE TEMPORARY BERM AND SLOPE DRAIN. CONTRACTOR SHALL GRADE TO PIPE INLET AND PROVIDE EROSION RESISTANT MATERIAL AS SHOWN. THE EROSION RESISTANT MATERIAL SHALL BE EITHER 1) ASPHALT PLANT MIX, TYPE 1 OR TYPE 2, MIN. 2" DEPTH, 2) EROSION CONTROL MAT, OR 3) CONCRETE, AS DIRECTED BY THE ENGINEER. THE SLOPE DRAIN SHALL CONSIST OF A NON-PERFORATED TEMPORARY DRAINAGE PIPE, 12 INCHES IN DIAMETER.

PLAN VIEW

TEMPORARY BERM AND SLOPE DRAIN DETAILS

(TO BE USED WHEN SHOULDER BERM GUTTER IS REQUIRED)

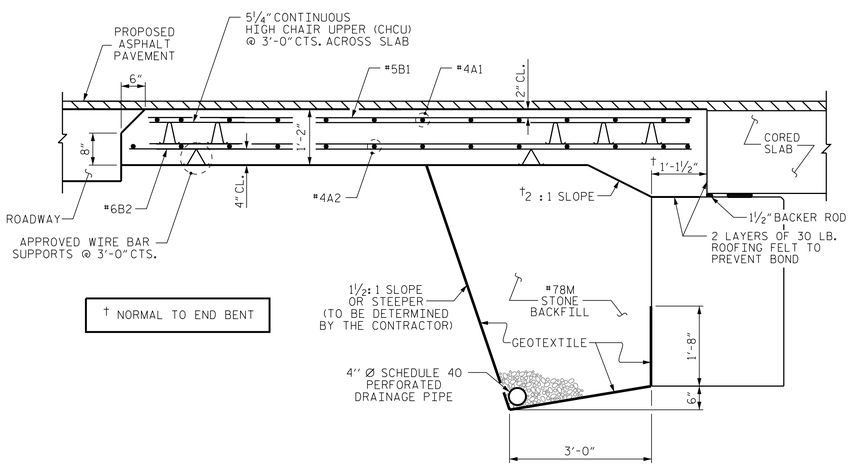

† NORMAL TO END BENT

SECTION THRU SLAB

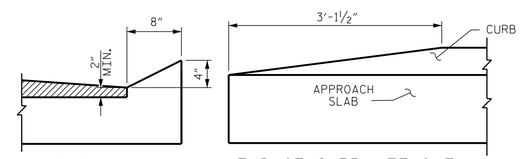

SECTION N-N

END OF CURB WITHOUT SHOULDER BERM GUTTER

CURB DETAILS

SPLICE LENGTHS		
BAR SIZE	EPOXY COATED	UNCOATED
#4	2'-0"	1'-9"
#5	2'-6"	2'-2"
#6	3'-10"	2'-7"

PROJECT NO. 17BP.7.R.33

GUILFORD COUNTY

STATION: 12+63.00 -L-

REPLACES BRIDGE #400338

NORTH CAROLINA PROFESSIONAL SEAL 035762 ENGINEER JOSEPH J. PICCIRILLI

DocuSigned by: Joseph J Piccirilli 6/15/2015

Kimley-Horn and Associates, Inc.
333 Fayetteville Street, Suite 600
Raleigh, NC 27601-1772
Phone (919) 677-2042
Fax (919) 653-5847
NC LICENSE # F-0102

This document, together with the concepts and designs presented herein, as an instrument of services, is intended only for the specific purpose and client for which it was prepared. Reuse of and improper reliance of this document without written consent by Kimley-Horn and Associates, Inc. shall be without liability to Kimley-Horn and Associates, Inc.

Copyright Kimley-Horn and Associates, Inc., 2013

STATE OF NORTH CAROLINA
DEPARTMENT OF TRANSPORTATION
RALEIGH

STANDARD
BRIDGE APPROACH SLAB
FOR PRESTRESSED CONCRETE
CORED SLAB UNIT
(SUB-REGIONAL TIER)
90° SKEW

REVISIONS						SHEET NO.
NO.	BY:	DATE:	NO.	BY:	DATE:	S-18
1			3			TOTAL SHEETS
2			4			18

STD. NO. BAS_33_90S

ASSEMBLED BY : JCW DATE : 4/13
CHECKED BY : CRA DATE : 4/13
DRAWN BY : SHS/MAA 5-09 REV. 12-11 MAA/AAC
CHECKED BY : BCH 5-09

6/15/2015 K:\RDT_Structures_Bridge\NC\17BP Bridges - Group E\01103693.BR400338\Cad\dgn\S-18.dgn