STATE	STATE PROJECT REFERENCE NO.	SHEET NO.	TOTAL SHEETS
N.C.	43658	1	

STATE PROJ. NO.	F. A. PROJ. NO.	DESCRIPTION
43658		PE
43658		ROW
43658		CONSTRUCTION

STATE OF NORTH CAROLINA
DIVISION OF HIGHWAYS

ROCKINGHAM

LOCATION: NC 65 – FROM SR 2460 (TYRE DODSON RD.) TO APPROX. 359 FT. SOUTHEAST OF SR 2460 (TYRE DODSON RD.).

TYPE OF WORK: GRADING, PAVING, CURB & GUTTER, DRAINAGE AND SIGNAGE.

See Sheet 1-A For Index of Sheets

VICINITY MAP

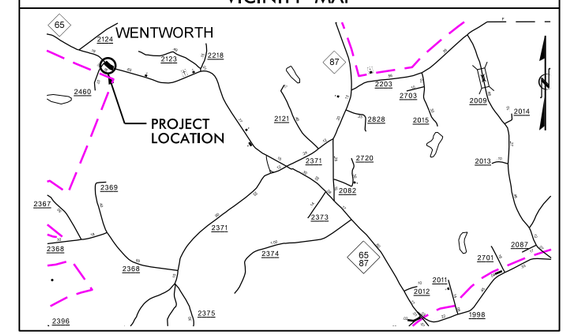

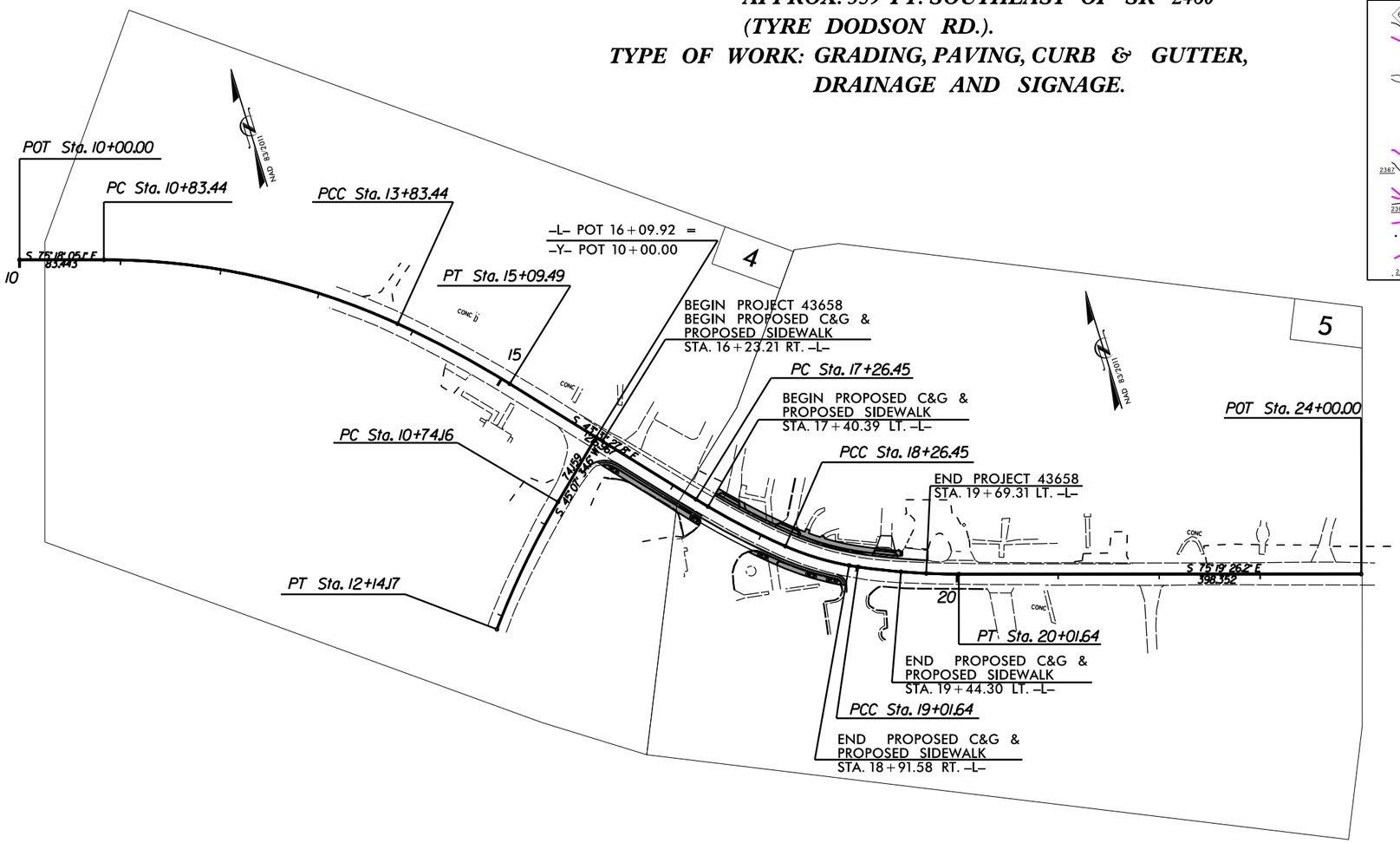

DocuSigned by:
Chris Smitherman
EA7926E3CDA446A...

10/29/2015

GRAPHIC SCALES

50 25 0 50 100
PLANS

50 25 0 50 100
PROFILE (HORIZONTAL)

5 2.5 0 5 10
PROFILE (VERTICAL)

DESIGN DATA

ADT 2012 = 6100
V = 25 MPH POSTED
* TTST = 2 DUAL 3
*ASSUMED

FUNC CLASS =

PROJECT LENGTH

LENGTH ROADWAY PROJECT 43658 = .066 Miles

Prepared in the Office of:
DIVISION OF HIGHWAYS
1584 YANCEVILLE STREE, GREENSBORO, NC 27405

2012 STANDARD SPECIFICATIONS

RIGHT OF WAY DATE: N/A

LETTING DATE: DEC, 2015

C.B. SMITHERMAN, P.E.
DDC ENGINEER

J.A. SOUR
PROJECT DESIGN TECHNICIAN

HYDRAULICS ENGINEER

SIGNATURE: P.E.

DDC ENGINEER

NORTH CAROLINA PROFESSIONAL SEAL 030995 ENGINEER CHRISTOPHER B. SMITHERMAN

SIGNATURE: P.E.

CONTRACT:

TIP PROJECT: 43658

09/08/99

29-OCT-2015 08:43
$:\DDC_Proj\Rockingham\43658 - NC65 @ Old Rock Crt house\Roadway\Proj\Opt 3_Minimum Impact_to Church Property_10_5_15\43658_Rdy_tsh.dgn
$$$USERNAME$$$

PROJECT REFERENCE NO.	SHEET NO.
43658	1–A

DIVISION DESIGN CONSTRUCT ENGINEER

NORTH CAROLINA PROFESSIONAL SEAL 030995 ENGINEER CHRISTOPHER B. SMITHERMAN

DocuSigned by:
Chris Smitherman
EA7920E3CDA440A...

10/29/2015

INDEX OF SHEETS

SHEET NUMBER	SHEET
1	TITLE SHEET
1-A	INDEX OF SHEETS, GENERAL NOTES, AND LIST OF STANDARD DRAWINGS
1-B	CONVENTIONAL SYMBOLS
2 - 2F	SURVEY CONTROL SHEET, PAVEMENT SCHEDULE, TYPICAL SECTIONS AND DETAILS
4 - 5	PLAN SHEETS
EC-1 THRU EC-5	EROSION CONTROL PLANS
X-1 THRU X-8	CROSS SECTIONS

GENERAL NOTES

2012 SPECIFICATIONS: EFFECTIVE: 01-17-12 REVISED: 07-30-2012

GRADING AND SURFACING OR RESURFACING AND WIDENING:
THE GRADE LINES SHOWN DENOTE THE FINISHED ELEVATION OF THE PROPOSED SURFACING AT GRADE POINTS SHOWN ON THE TYPICAL SECTIONS. WHERE NO GRADE LINES ARE SHOWN, THE PROFILES SHOWN DENOTE THE TOP ELEVATION OF THE EXISTING PAVEMENT ALONG THE CENTER LINE OF SURVEY ON WHICH THE PROPOSED RESURFACING WILL BE PLACED. GRADE LINES MAY BE ADJUSTED BY THE ENGINEER IN ORDER TO SECURE A PROPER TIE-IN.

SUPERELEVATION:
MAINTAIN EXISTING SUPERELEVATION .

SHOULDER CONSTRUCTION:
ASPHALT, EARTH, AND CONCRETE SHOULDER CONSTRUCTION ON THE HIGH SIDE OF SUPERELEVATED CURVES SHALL BE IN ACCORDANCE WITH STD. NO. 560.01.

SIDE ROADS:
THE CONTRACTOR WILL BE REQUIRED TO DO ALL NECESSARY WORK TO PROVIDE SUITABLE CONNECTIONS WITH ALL ROADS, STREETS AND DRIVES ENTERING THIS PROJECT. THIS WORK WILL BE PAID FOR AT THE CONTRACT UNIT PRICE FOR THE PARTICULAR ITEMS INVOLVED.

DRIVEWAYS:
DRIVEWAYS SHALL BE CONSTRUCTED IN ACCORDANCE WITH STD. NO. 848.03 AT LOCATIONS SHOWN ON THE PLANS OR AS DIRECTED BY THE ENGINEER.

STREET TURNOUT:
STREET RETURNS SHALL BE CONSTRUCTED IN ACCORDANCE WITH STD. NO. 848.01 USING THE RADII NOTED ON THE PLANS.

SUBSURFACE PLANS:
NO SUBSURFACE PLANS ARE AVAILABLE ON THIS PROJECT. THE CONTRACTOR SHOULD MAKE HIS OWN INVESTIGATION AS TO THE SUBSURFACE CONDITIONS.

UTILITIES:
UTILITY OWNERS ON THIS PROJECT ARE:

AT & T- TELEPHONE	DUKE ENERGY - POWER
TIME WARNER - CABLE	PIEDMONT NATURAL GAS - GAS

ANY RELOCATION OF EXISTING UTILITIES WILL BE ACCOMPLISHED BY OTHERS.

CURB RAMPS:

CURB RAMPS ARE SHOWN ON THE PLANS AT APPROXIMATE LOCATIONS. CONSTRUCT ALL CURB RAMPS IN ACCORDANCE WITH PLAN SHEET 2F AND NOTES ON STD. 848.05 SHEET 3 OF 3.

2012 ROADWAY STANDARD DRAWINGS

EFF. 01-17-12

The following Roadway Standards as appear in "Roadway Standard Drawings" Highway Design Branch - N. C. Department of Transportation - Raleigh, N. C., Dated January 2012, are applicable to this project and by reference hereby are considered a part of these plans:

STD.NO.	TITLE
DIVISION 2 - EARTHWORK	
225.02	Guide for Grading Subgrade - Secondary and Local
DIVISION 3 - PIPE CULVERTS	
300.01	Method of Pipe Installation
DIVISION 8 - INCIDENTALS	
840.00	Concrete Base Pad for Drainage Structures
840.01	Brick Catch Basin 12" thru 54 " Pipe
840.02	Concrete Catch Basin 12" thru 54" Pipe
840.03	Frames, Grates and Hood for Use on Standard Catch Basin
840.19	Concrete Grated Drop Inlet Type 'D' 12" thru 36"
840.24	Frames and Narrow Slot Sag Grates
846.01	Concrete Curb, Gutter and Curb & Gutter
848.01	Concrete Sidewalk
848.03	Driveway Turnout - Drop Curb Type
848.04	Street Turnout
848.05	Curb Ramp - Proposed Curb & Gutter
876.02	Guide for Rip Rap at Pipe Outlets
DIVISION 9 - SIGNING	
903.10	Ground Mounted Sign Supports
903.20	Mounting of Type 'D', 'E' and 'F' Signs on Wood Posts
904.10	Orientation of Ground Mounted Signs
904.50	Mounting of Type 'D', 'E' and 'F' Signs on 'U' Channel Posts
DIVISION 11 - WORK ZONE TRAFFIC CONTROL	
1101.01	Work Zone Warning Signs
1101.02	Temporary Lane Closures
1101.04	Temporary Shoulder Closures
1101.11	Traffic Control Design Tables
1110.01	Stationary Work Zone Signs
1110.02	Portable Work Zone Signs
1115.01	Flashing Arrow Boards
1130.01	Drums
1135.01	Cones
1150.01	Flagging Devices
1165.01	Work Vehicle Lighting Systems and TMA Delineation
1180.01	Skinny Drum
DIVISION 12 - PAVEMENT MARKINGS, MARKERS AND DELINEATION	
1205.01	Pavement Markings - Line Types and Offsets
1205.07	Pavement Markings - Pedestrian Crosswalks

DIVISION 16 - EROSION CONTROL AND ROADSIDE DEVELOPMENT
(SEE SHEET EC-1 FOR A LIST OF STANDARD DRAWINGS)

8/17/99
29-OCT-2015 08:43
S:\DOC\5_Rockingham\43658 - NC65 @ Old Rock Crt house\Roadway\Proj\Opt3_Minimum Impact_to Church Property_10.5_15\43658_rdy_pshlA.dgn
$$$$USERNAME$$$$

09/08/09

PROJECT REFERENCE NO.	SHEET NO.
43658	1B

Note: Not to Scale

****S.U.E. = Subsurface Utility Engineering***

STATE OF NORTH CAROLINA
DIVISION OF HIGHWAYS

CONVENTIONAL PLAN SHEET SYMBOLS

BOUNDARIES AND PROPERTY:

- State Line
- County Line
- Township Line
- City Line
- Reservation Line
- Property Line
- Existing Iron Pin — EIP
- Property Corner
- Property Monument — ECM
- Parcel/Sequence Number — 123
- Existing Fence Line
- Proposed Woven Wire Fence
- Proposed Chain Link Fence
- Proposed Barbed Wire Fence
- Existing Wetland Boundary — WLB
- Proposed Wetland Boundary — WLB
- Existing Endangered Animal Boundary — EAB
- Existing Endangered Plant Boundary — EPB

BUILDINGS AND OTHER CULTURE:

- Gas Pump Vent or U/G Tank Cap
- Sign — S
- Well — W
- Small Mine
- Foundation
- Area Outline
- Cemetery
- Building
- School
- Church
- Dam

HYDROLOGY:

- Stream or Body of Water
- Hydro, Pool or Reservoir
- Jurisdictional Stream — JS
- Buffer Zone 1 — BZ 1
- Buffer Zone 2 — BZ 2
- Flow Arrow
- Disappearing Stream
- Spring
- Wetland
- Proposed Lateral, Tail, Head Ditch — FLOW
- False Sump

RAILROADS:

- Standard Gauge — CSX TRANSPORTATION
- RR Signal Milepost — MILEPOST 35
- Switch — SWITCH
- RR Abandoned
- RR Dismantled

RIGHT OF WAY:

- Baseline Control Point
- Existing Right of Way Marker
- Existing Right of Way Line
- Proposed Right of Way Line — RW
- Proposed Right of Way Line with Iron Pin and Cap Marker — RW
- Proposed Right of Way Line with Concrete or Granite Marker — RW
- Existing Control of Access — CA
- Proposed Control of Access — CA
- Existing Easement Line — E
- Proposed Temporary Construction Easement — E
- Proposed Temporary Drainage Easement — TDE
- Proposed Permanent Drainage Easement — PDE
- Proposed Permanent Drainage / Utility Easement — DUE
- Proposed Permanent Utility Easement — PUE
- Proposed Temporary Utility Easement — TUE
- Proposed Permanent Easement with Iron Pin and Cap Marker

ROADS AND RELATED FEATURES:

- Existing Edge of Pavement
- Existing Curb
- Proposed Slope Stakes Cut — C
- Proposed Slope Stakes Fill — F
- Proposed Wheel Chair Ramp — WCR
- Existing Metal Guardrail
- Proposed Guardrail
- Existing Cable Guiderail
- Proposed Cable Guiderail
- Equality Symbol
- Pavement Removal

VEGETATION:

- Single Tree
- Single Shrub
- Hedge
- Woods Line
- Orchard
- Vineyard — Vineyard

EXISTING STRUCTURES:

MAJOR:

- Bridge, Tunnel or Box Culvert — CONC
- Bridge Wing Wall, Head Wall and End Wall — CONC WW

MINOR:

- Head and End Wall — CONC HW
- Pipe Culvert
- Footbridge
- Drainage Box: Catch Basin, DI or JB — CB
- Paved Ditch Gutter
- Storm Sewer Manhole — S
- Storm Sewer — S

UTILITIES:

POWER:

- Existing Power Pole
- Proposed Power Pole
- Existing Joint Use Pole
- Proposed Joint Use Pole
- Power Manhole — P
- Power Line Tower
- Power Transformer
- U/G Power Cable Hand Hole — HH
- H-Frame Pole
- Recorded U/G Power Line — P
- Designated U/G Power Line (S.U.E.*) — P

TELEPHONE:

- Existing Telephone Pole
- Proposed Telephone Pole
- Telephone Manhole — T
- Telephone Booth
- Telephone Pedestal — T
- Telephone Cell Tower
- U/G Telephone Cable Hand Hole — HH
- Recorded U/G Telephone Cable — T
- Designated U/G Telephone Cable (S.U.E.*) — T
- Recorded U/G Telephone Conduit — TC
- Designated U/G Telephone Conduit (S.U.E.*) — TC
- Recorded U/G Fiber Optics Cable — T FO
- Designated U/G Fiber Optics Cable (S.U.E.*) — T FO

WATER:

- Water Manhole — W
- Water Meter
- Water Valve
- Water Hydrant
- Recorded U/G Water Line
- Designated U/G Water Line (S.U.E.*)
- Above Ground Water Line — A/G Water

TV:

- TV Satellite Dish
- TV Pedestal — C
- TV Tower
- U/G TV Cable Hand Hole — HH
- Recorded U/G TV Cable — TV
- Designated U/G TV Cable (S.U.E.*) — TV
- Recorded U/G Fiber Optic Cable — TV FO
- Designated U/G Fiber Optic Cable (S.U.E.*) — TV FO

GAS:

- Gas Valve
- Gas Meter
- Recorded U/G Gas Line — G
- Designated U/G Gas Line (S.U.E.*) — G
- Above Ground Gas Line — A/G Gas

SANITARY SEWER:

- Sanitary Sewer Manhole
- Sanitary Sewer Cleanout
- U/G Sanitary Sewer Line — SS
- Above Ground Sanitary Sewer — A/G Sanitary Sewer
- Recorded SS Forced Main Line — FSS
- Designated SS Forced Main Line (S.U.E.*) — FSS

MISCELLANEOUS:

- Utility Pole
- Utility Pole with Base
- Utility Located Object
- Utility Traffic Signal Box — S
- Utility Unknown U/G Line — ?UTL
- U/G Tank; Water, Gas, Oil
- A/G Tank; Water, Gas, Oil
- U/G Test Hole (S.U.E.*)
- Abandoned According to Utility Records — AATUR
- End of Information — E.O.I.

PROJECT REFERENCE NO.	SHEET NO.
43658	2A

DIVISION DESIGN CONSTRUCT ENGINEER

NORTH CAROLINA PROFESSIONAL SEAL 030995 ENGINEER CHRISTOPHER B. SMITHERMAN

DocuSigned by: Chris Smitherman
EA7920E9CBA440A...
10/29/2015

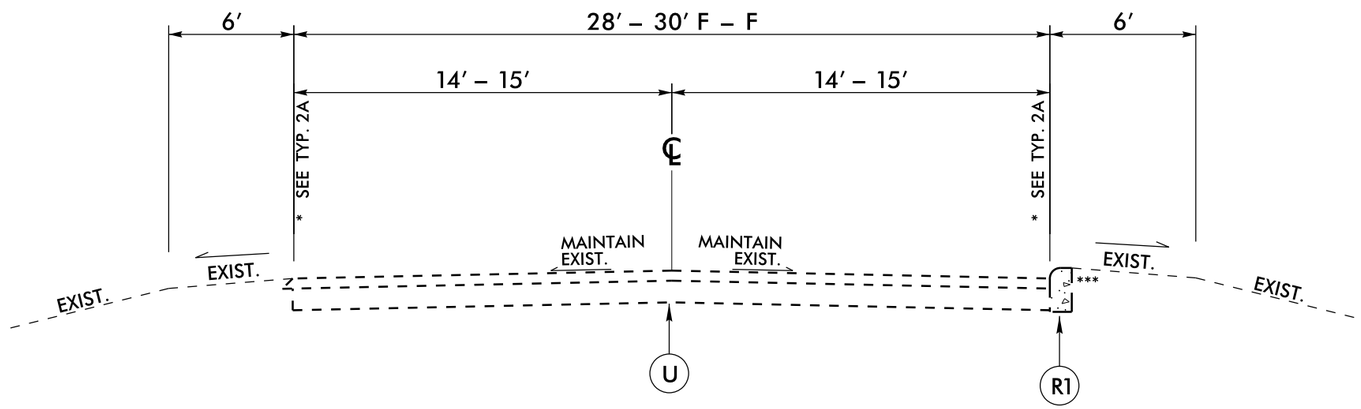

TYPICAL SECTION NO. 1

–L– STA. 16+23.21 RT. TO STA. 18+91.58 RT.
–L– STA. 17+40.39 LT TO STA. 19+44.30 LT.

NOTES:

1. SAWCUT AND REMOVE EXISTING PAVEMENT AND ASPHALT BST CURB AS NOTED ON PLANS.

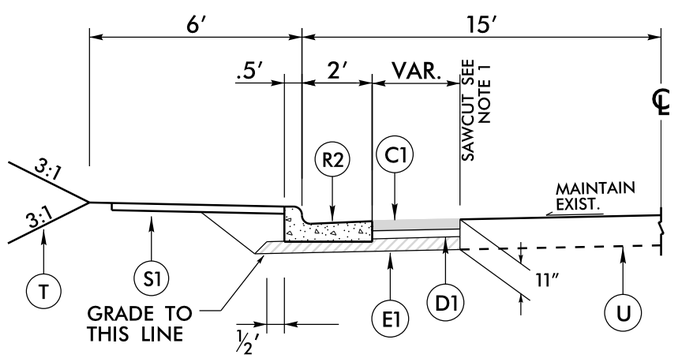

TYPICAL SECTION NO. 2A
–L– STA. 16+23.21 RT. TO STA. 18+91.58 RT.
–L– STA. 17+40.39 LT TO STA. 19+44.30 LT.

PAVEMENT SCHEDULE

C1	PROP. APPROX. 3″ ASPHALT CONCRETE SURFACE COURSE, TYPE SF 9.5A, AT AN AVERAGE RATE OF 165 LBS. PER SQ. YD. IN EACH OF TWO LAYERS.
D1	PROP. APPROX. 4″ ASPHALT CONCRETE INTERMEDIATE COURSE, TYPE I19.0B, AT AN AVERAGE RATE OF 456 LBS. PER SQ. YD.
E1	PROP. APPROX. 4″ ASPHALT CONCRETE BASE COURSE, TYPE B25.0B, AT AN AVERAGE RATE OF 456 LBS. PER SQ. YD.
R1	EXISTING BST OR CONCRETE CURB TO BE REMOVED
R2	PROPOSED 2′ - 6″ CONCRETE CURB & GUTTER
S1	PROPOSED 4″ CONCRETE SIDEWALK
T	EARTH MATERIAL
U	EXISTING PAVEMENT

5/14/99
29-OCT-2015 08:43
t_house\Roadway\Proj\Opt 3_Minimum Impact_to Church Property_10.5.15\43658_Rdy_typ.dgn
$$$$USERNAME$$$$

PROJECT REFERENCE NO.	SHEET NO.
43658	2

43658 SURVEY CONTROL SHEET

25′ 0′ 25′ 50′
12.5′
(ENGLISH)

-L- CURVE C4	-L- CURVE C5	-L- CURVE EL1	-L- CURVE EL2	-L- CURVE EL3	-Y- CURVE C7
PI Sta 12+35.78	PI Sta 14+46.55	PI Sta 17+76.54	PI Sta 18+64.28	PI Sta 19+51.73	PI Sta 11+44.33
Δ = 24° 33′ 19.2″ (RT)	Δ = 7° 13′ 18.1″ (RT)	Δ = 8° 11′ 06.4″ (LT)	Δ = 15° 23′ 10.3″ (LT)	Δ = 8° 11′ 06.4″ (LT)	Δ = 9° 33′ 45.9″ (LT)
D = 8° 11′ 06.4″	D = 5° 43′ 46.5″	D = 8° 11′ 06.4″	D = 20° 27′ 46.0″	D = 8° 11′ 06.4″	D = 6° 49′ 47.8″
L = 300.00′	L = 126.04′	L = 100.00′	L = 75.19′	L = 100.00′	L = 140.01′
T = 152.34′	T = 63.10′	T = 50.09′	T = 37.82′	T = 50.09′	T = 70.17′
R = 700.00′	R = 1,000.00′	R = 700.00′	R = 280.00′	R = 700.00′	R = 838.89′

DATUM DESCRIPTION

THE LOCALIZED COORDINATE SYSTEM DEVELOPED FOR THIS PROJECT IS BASED ON THE STATE PLANE COORDINATES ESTABLISHED BY NCDOT FOR MONUMENT "NC65-2 (NC136)"
WITH NAD 83/NA 2011 STATE PLANE GRID COORDINATES OF
NORTHING: 965215.673(ft) EASTING: 1772721.425(ft)
ELEVATION: 760.45(ft)
THE AVERAGE COMBINED GRID FACTOR USED ON THIS PROJECT (GROUND TO GRID) IS: 1.0000420725
THE N.C. LAMBERT GRID BEARING AND LOCALIZED HORIZONTAL GROUND DISTANCE FROM "NC65-2 (NC136)" TO -L- STATION 10+00 IS
S 73°18′44″ E 309.00′
ALL LINEAR DIMENSIONS ARE LOCALIZED HORIZONTAL DISTANCES
VERTICAL DATUM USED IS NAVD 88

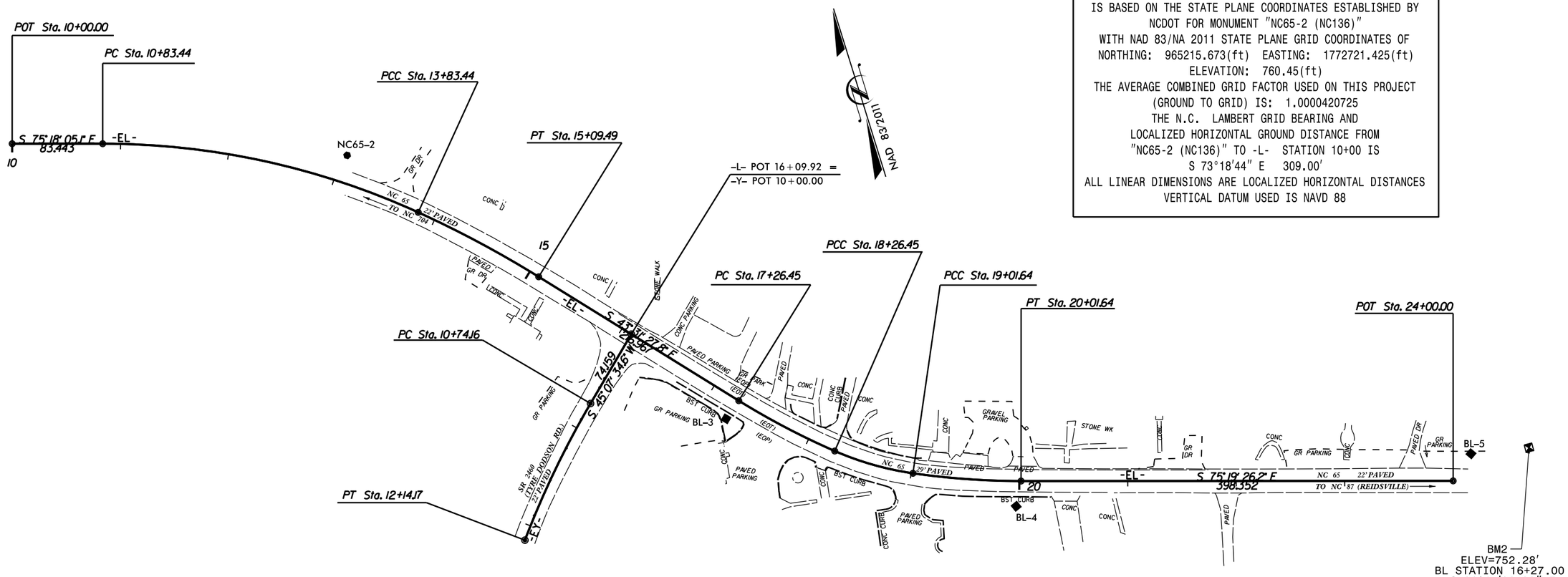

Description	North	East	Elevation	L Station	Offset
NC65-1	965485.6840	1771777.3200	729.7500	OUTSIDE PROJECT LIMITS	
NC65-2	965215.6730	1772721.4250	760.4500	13+04.65	25.18 LT
BL-3	964891.9728	1772997.6274	769.5900	17+25.29	20.40 RT
BL-4	964746.0852	1773235.8538	762.9200	19+97.29	23.29 RT
BL-5	964686.5572	1773653.7086	752.7800	OUTSIDE PROJECT LIMITS	

5/14/99

29-OCT-2015 08:43
r:\roadway\proj\3_Minimum Impact_to Church Property_10.5.15\43658_RDY_PSH2_SURVEYDATA.dgn
$$USERNAME$$

PROJECT REFERENCE NO.	SHEET NO.
43658	2B

DIVISION DESIGN CONSTRUCT ENGINEER

NORTH CAROLINA PROFESSIONAL SEAL 030995 ENGINEER CHRISTOPHER B. SMITHERMAN

DocuSigned by: Chris Smitherman
EA7926E3CDA446A...
10/29/2015

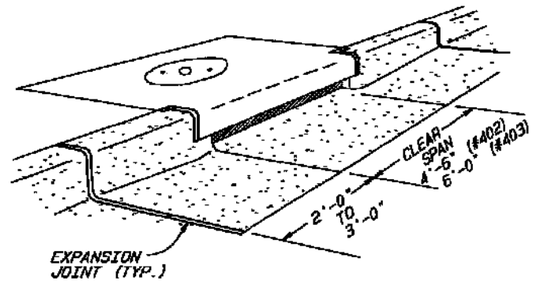

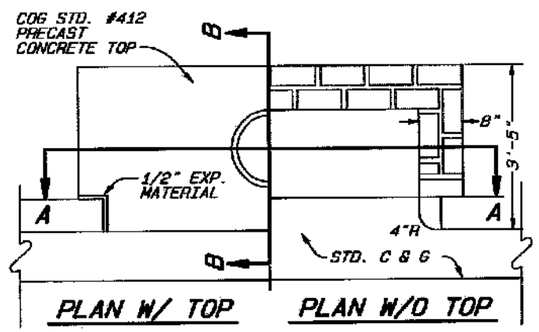

NOTES:

ALL MORTAR JOINTS ARE TO BE 1/2" ± 1/8".

BRICK MASONRY CAN BE STANDARD CLAY BRICK, JUMBO BRICK OR CONCRETE BRICK.

FOR DEPTHS OVER 3'-6" USE STEPS ON 16" CENTERS. STEPS SHALL BE IN ACCORDANCE WITH COG STD. #414.

WHEN CONSTRUCTING THE STRUCTURE OVER AN EXISTING PIPE LINE, SAW CUT AND REMOVE A SECTION OF PIPE EQUAL TO THE INSIDE DIAMETER OF THE STRUCTURE. POUR A NEW BOTTOM AS SHOWN AND CONSTRUCT THE NEW STRUCTURE. NEW STRUCTURES ARE NOT TO BE BUILT ON TOP OF THE PIPE.

THIS STANDARD DRAWING ALSO APPLIES TO PRECAST CONCRETE CURB INLETS. THE USE OF PRECAST CONCRETE INLETS IS SUBJECT TO THE "POLICY STATEMENT FOR THE USE OF PRECAST CONCRETE DRAINAGE STRUCTURES IN CITY MAINTAINED STORM SEWER SYSTEMS" AVAILABLE IN THE REVISED "2007 STORM DRAINAGE DESIGN MANUAL" ON THE STORMWATER MANAGEMENT WEBSITE.

FOR PRECAST CONCRETE MODELS OF THIS STRUCTURE, THE MANUFACTURER SHALL STAMP OR STENCIL ITS LOGO OR NAME ON THE INSIDE AND OUTSIDE OF THE STRUCTURE.

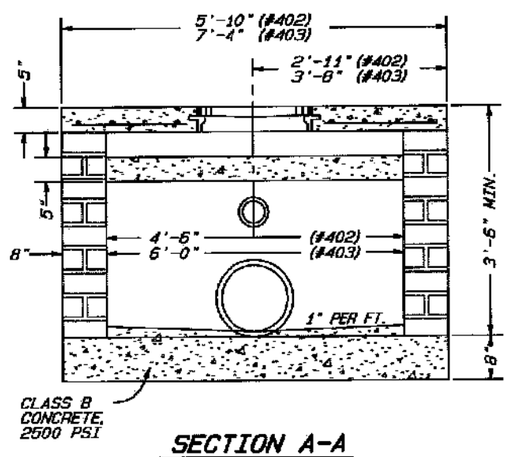

SECTION A-A

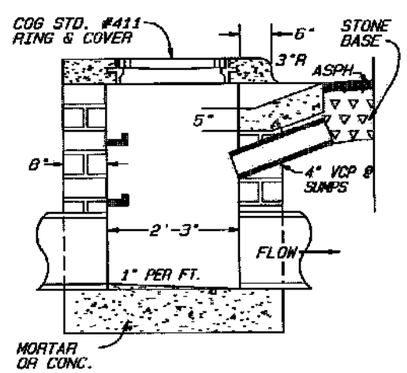

SECTION B-B

3

1 OF 2

C I T Y O F G R E E N S B O R O

STANDARD BRICK MASONRY CURB INLET	STD. NO.	REV.
	402/403	06-99 12-07 08-02 3-08 06-07 12-09

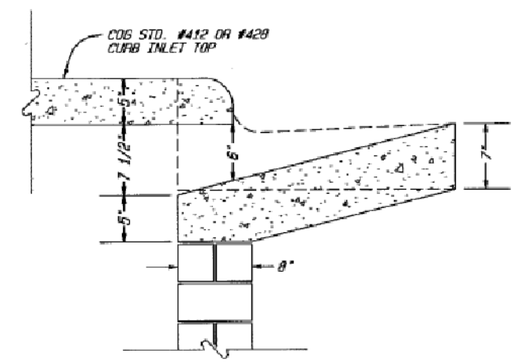

STANDARD CURB INLET THROAT
FOR 2'-6" CURB & GUTTER

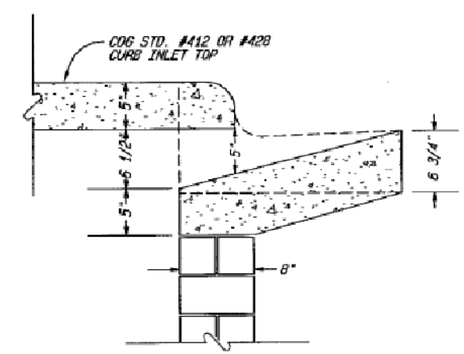

STANDARD CURB INLET THROAT
FOR 2'-0" CURB & GUTTER

3

2 OF 2

C I T Y O F G R E E N S B O R O

STANDARD BRICK MASONRY CURB INLET (THROAT)	STD. NO.	REV.
	402/403	06-99 12-07 08-02 3-08 06-07 12-09

5/14/99
* DIGITAL FILE 23 Dec 2009
G:\Standard Drawings\Roadway\D09402-403.dgn
29-OCT-2015 08:43
G:\Roadway\Proj\Opt 3.Minimum Impact to Church Property.10.5.15\43658.Rdy.psh2details.2B.dgn
$$$$USERNAME$$$$

PROJECT REFERENCE NO.	SHEET NO.
43658	2C

DIVISION DESIGN CONSTRUCT ENGINEER

NORTH CAROLINA PROFESSIONAL SEAL 030995 ENGINEER CHRISTOPHER B. SMITHERMAN

DocuSigned by: Chris Smitherman
EA7926E3CDA446A...
10/29/2015

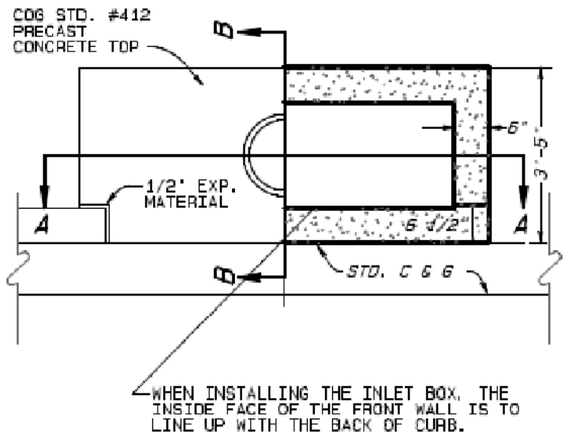

NOTES:

THE USE OF PRECAST CONCRETE CURB INLETS IS SUBJECT TO THE "POLICY STATEMENT FOR THE USE OF PRECAST CONCRETE DRAINAGE STRUCTURES IN CITY MAINTAINED STORM DRAINAGE SYSTEMS" AVAILABLE IN THE REVISED "2007 STORM DRAINAGE DESIGN MANUAL" ON THE STORMWATER MANAGEMENT WEBSITE.

CONSTRUCTION AND USE OF PRECAST CONCRETE STRUCTURES SHALL ADHERE TO ALL PERTINENT REQUIREMENTS OF THE STANDARD #402/403 BRICK MASONRY STRUCTURES.

STEEL DESIGN IS NOT SHOWN ON THIS DRAWING. STEEL DESIGN IS THE RESPONSIBILITY OF THE MANUFACTURERS ENGINEER AND SHALL BE SHOWN ON SEALED SHOP DRAWINGS SUBMITTED FOR APPROVAL FOR USE IN THE CITY OF GREENSBORO DRAINAGE INFRASTRUCTURE.

FOR PRECAST CONCRETE MODELS OF THIS STRUCTURE, THE MANUFACTURER SHALL STAMP OR STENCIL ITS LOGO OR NAME ON THE INSIDE AND OUTSIDE OF THE STRUCTURE.

PRECAST STRUCTURE SHOULD BE SET APPROXIMATELY 2 FT LOW AND BROUGHT UP TO FINAL GRADE USING BRICK MASONRY.

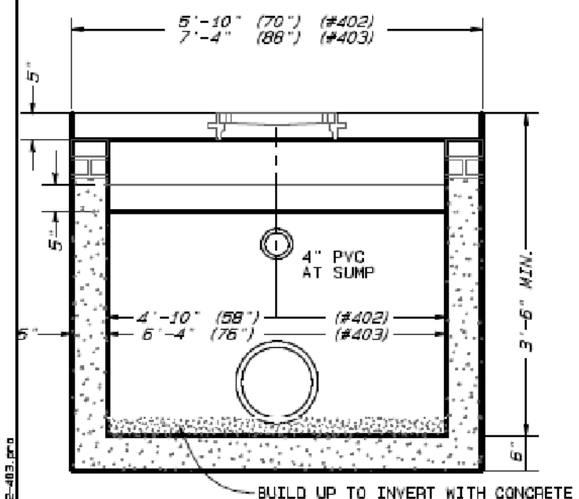

SECTION A-A

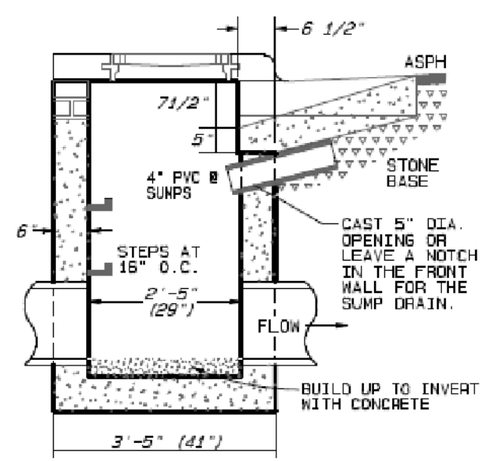

SECTION B-B

3 OF 3

CITY OF GREENSBORO		
STANDARD PRECAST CONCRETE CURB INLET	STD. NO. 402/403	REV. 06-99 12-07 08-02 3-08 06-07 12-09

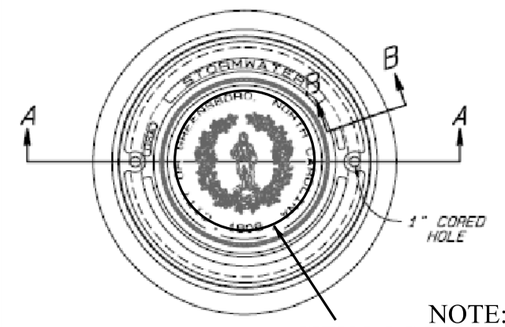

NOTE:
CITY LOGO NOT REQUIRED

PLAN

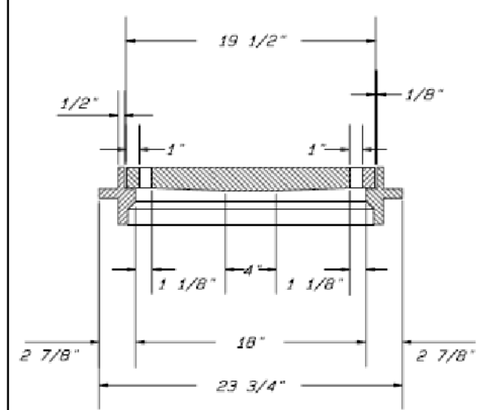

SECTION A-A

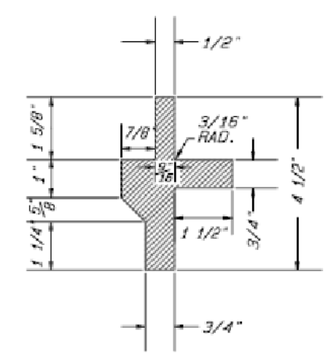

SECTION B-B

MH-RCR 47L
CAPITAL - 1662L
US FOUNDRY A5098
US FOUNDRY A5117

NOTE:
~~THE CITY OF GREENSBORO LOGO SHALL BE CAST INTO ALL LIDS~~
CITY LOGO NOT REQUIRED

CITY OF GREENSBORO		
STANDARD INLET RING AND COVER	STD. NO. 411	REV. 03-97 06-99 10-97 03-01 03-98 03-08

5/14/99
* DIGITAL FILE 23 Sep 2010
* DIGITAL FILE 28 Mar 2008
S:\Standard Drawings\Roadway\D3402-403.pro
S:\Standard Drawings\Roadway\D411.pro
29-OCT-2015 08:43
S:\Roadway\Projects\Opt 3_Minimum Impact_to Church Property_10.5.15\43658_Rdy_psh2details_2C.dgn
$$$$USERNAME$$$$

PROJECT REFERENCE NO.	SHEET NO.
43658	2D

DIVISION DESIGN CONSTRUCT ENGINEER

NORTH CAROLINA PROFESSIONAL SEAL 030995 ENGINEER CHRISTOPHER B. SMITHERMAN

DocuSigned by: Chris Smitherman EA7926E3CDA446A...

10/29/2015

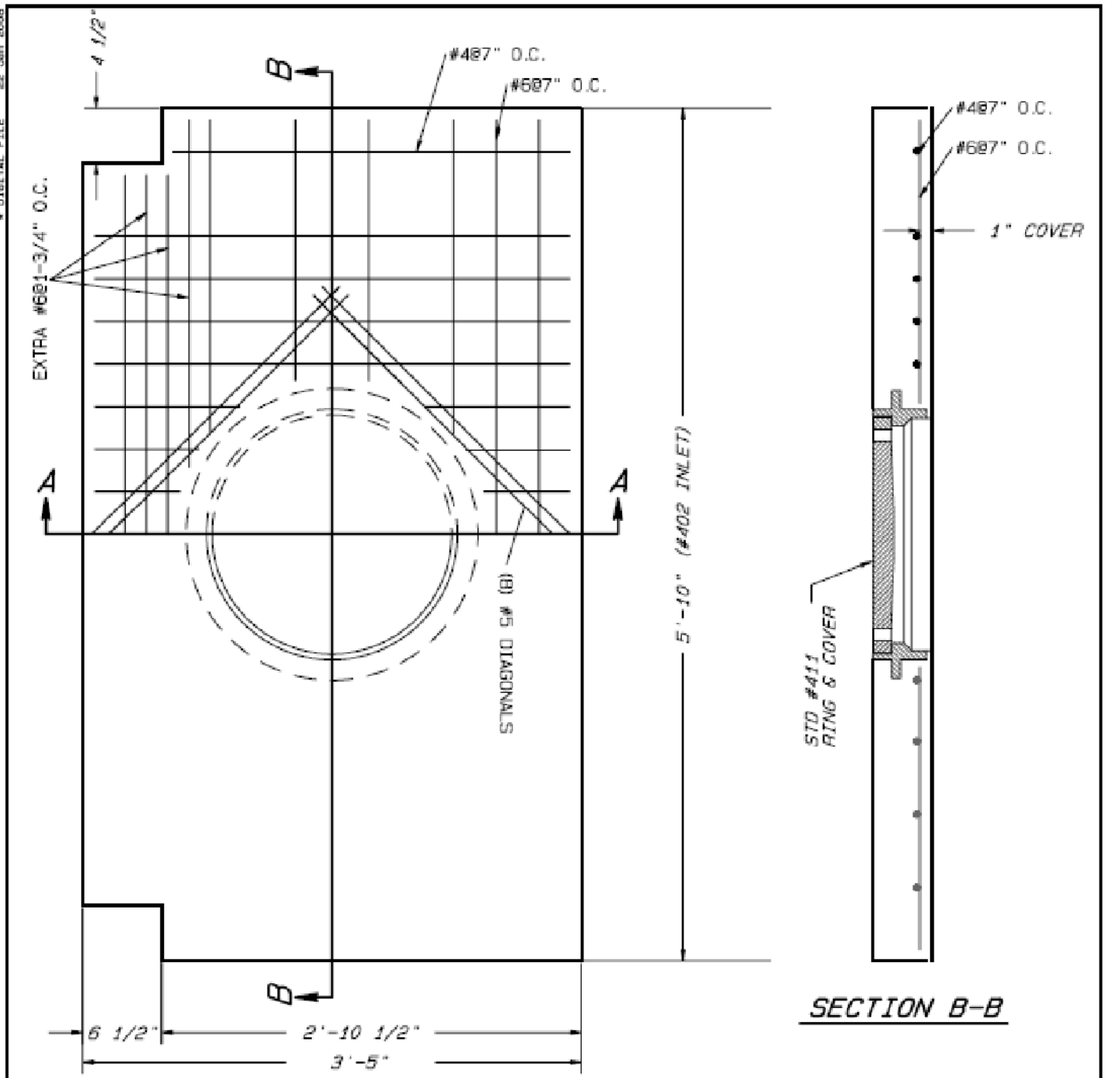

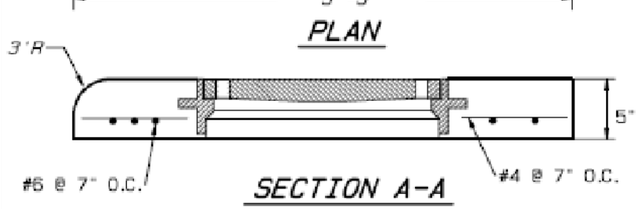

NOTES:
1. CONCRETE: 28 DAY COMPRESSIVE STRENGTH f'c = 4,500 psi
2. REINFORCING: ASTM A-615, GRADE 60
3. ALL COVER TO REINFORCING IS 1"
4. ALL STEEL CUT OUT FOR OPENINGS WILL BE REPLACED, 1/2 THE REINFORCING ON EACH SIDE OF OPENING.
5. ~~FOR COMMERCIAL AND INDUSTRIAL INTERSECTIONS USE STD. #412-H~~

THE MANUFACTURER SHALL STAMP OR STENCIL ITS LOGO OR NAME IN TWO LOCATIONS ON THE SIDE OR REAR EDGES OF THE TOP.

FOR USE ON #402 INLET BOX

1 OF 2

CITY OF GREENSBORO

STANDARD PRECAST CONCRETE CURB INLET TOP FOR STD. #402 CURB INLET	STD. NO.	REV.
	412	12-07 03-08 08-08

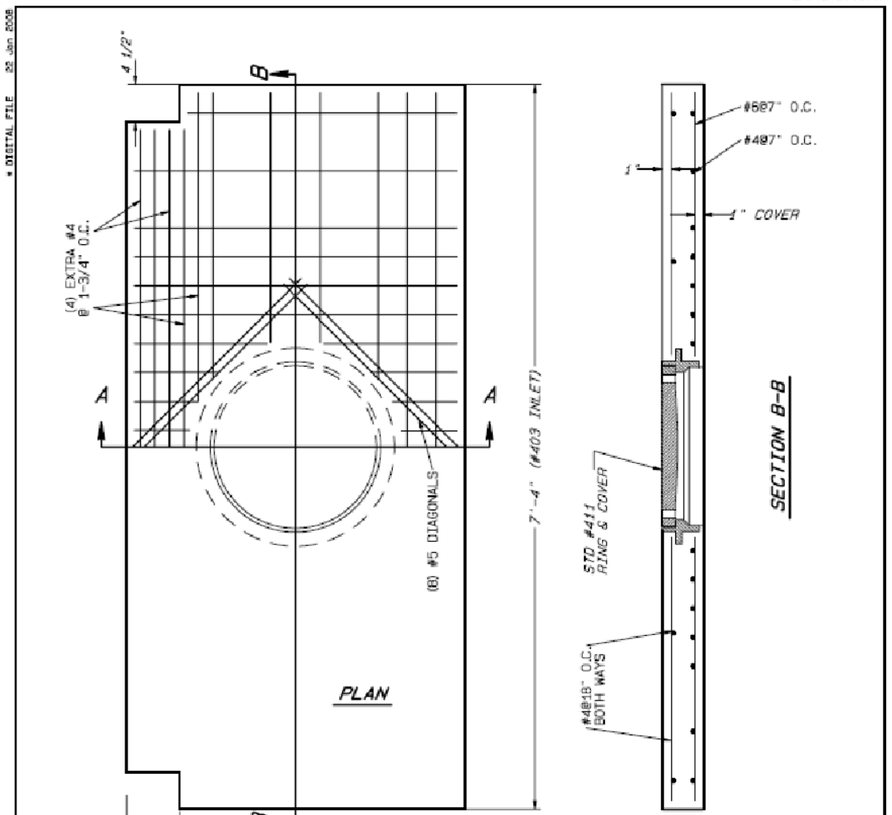

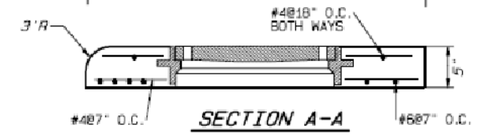

NOTES:
1. CONCRETE: 28 DAY COMPRESSIVE
2. STRENGTH f'c = 4,500 psi
3. REINFORCING: ASTM A-615, GRADE 60
4. ALL COVER TO REINFORCING IS 1" ALL STEEL CUT OUT FOR OPENINGS WILL BE REPLACED, 1/2 THE REINFORCING ON EACH SIDE OF OPENING.
5. ~~FOR COMMERCIAL AND INDUSTRIAL INTERSECTIONS USE STD. #412-H.~~
6. STD. #403 IS NOT ALLOWED AT COMMERCIAL AND INDUSTRIAL INTERSECTIONS.

THE MANUFACTURER SHALL STAMP OR STENCIL ITS LOGO OR NAME IN TWO LOCATIONS ON THE SIDE OR REAR EDGES OF THE TOP.

FOR USE ON #403 INLET BOX

2 OF 2

CITY OF GREENSBORO

STANDARD PRECAST CONCRETE CURB INLET TOP FOR STD. #403 CURB INLET	STD. NO.	REV.
	412	12-07 03-08 08-08

5/14/99 * DIGITAL FILE 22 Jan 2008
H:\osborne\COVERSHEET\C0641B-H.pro
29-OCT-2015 08:43
se\Roadway\Proj\Opt 3.Minimum Impact.to Church Property.10.5.15\43658.Rdy.psh2details.2D.dgn
ASSISTERNAME$$$$

PROJECT REFERENCE NO.	SHEET NO.
43658	2E

DIVISION DESIGN CONSTRUCT ENGINEER

NORTH CAROLINA PROFESSIONAL SEAL 030995 ENGINEER CHRISTOPHER B. SMITHERMAN

DocuSigned by: Chris Smitherman
EA7926E3CDA446A...
10/29/2015

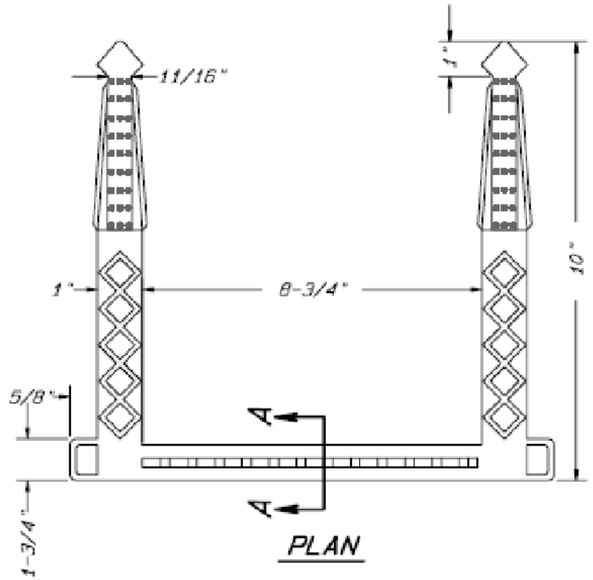

PLAN

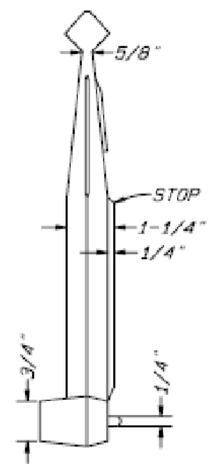

SIDE ELEVATION
COMPOSITE

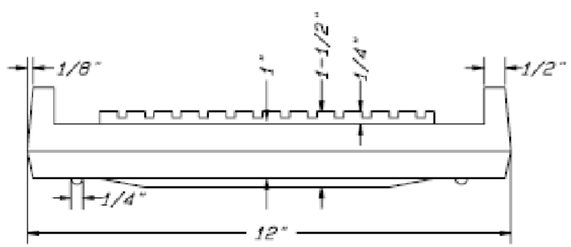

ELEVATION

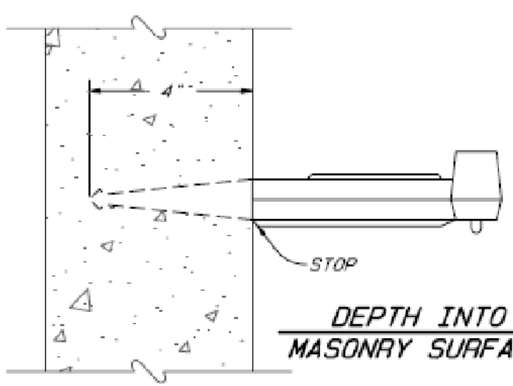

DEPTH INTO
MASONRY SURFACE

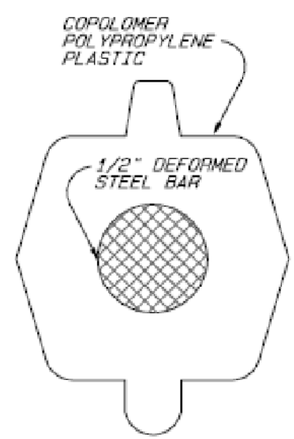

SECTION A-A

CITY OF GREENSBORO

STANDARD PLASTIC STEP FOR BRICK MASONRY STRUCTURES	STD. NO.	REV.
	414	03-01

5/14/99
27 Aug 2002
DIGITAL FILE
29-OCT-2015 08:43

PROJECT REFERENCE NO.	SHEET NO.
43658	2F

PAY LIMITS FOR 1 CURB RAMP

1. *8.33% (12:1) MAX RAMP SLOPE*
2. *CROSS SLOPE: 2.00%*
3. *CURB RAMPS REQUIRE A (4'-0") MINIMUM LANDING WITH A MAXIMUM CROSS SLOPE AND LONGITUDINAL SLOPE OF 2.00% WHERE PEDESTRIANS PERFORM TURNING MANEUVERS. SLOPE TO DRAIN TO CURB.*

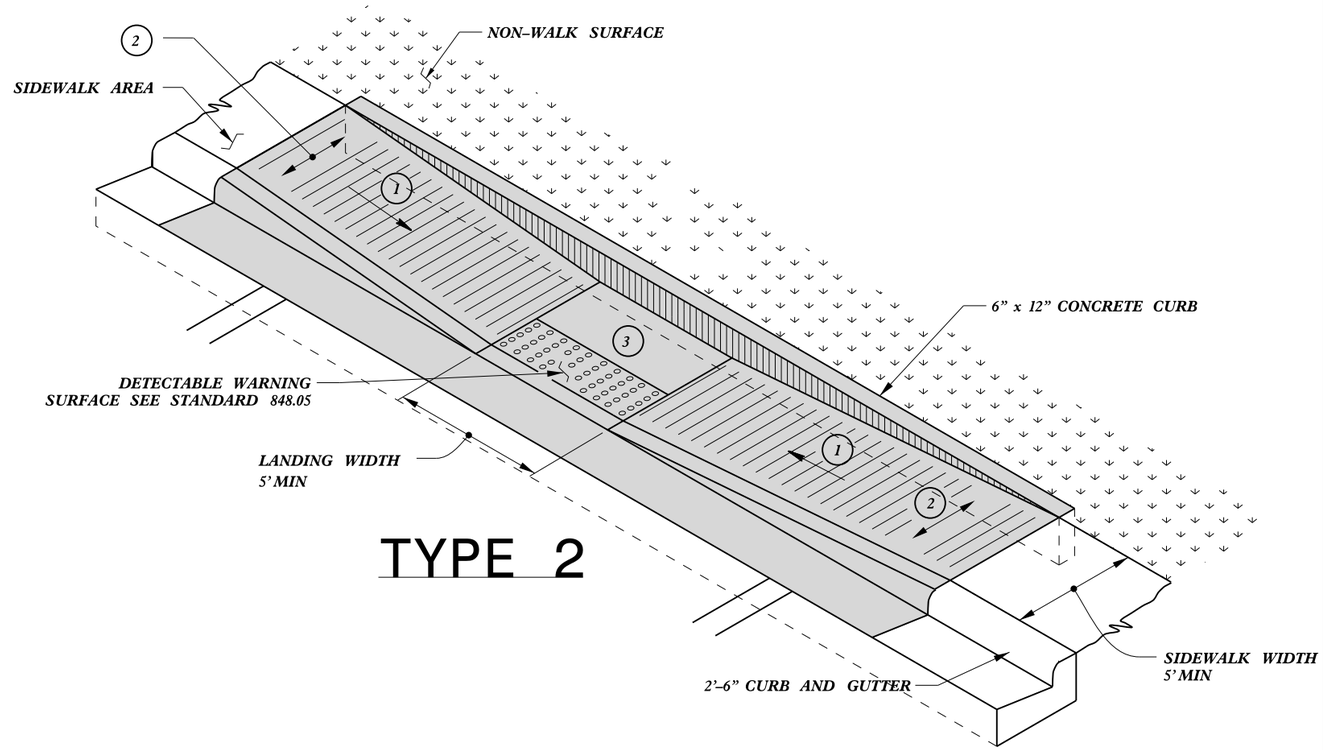

TYPE 2

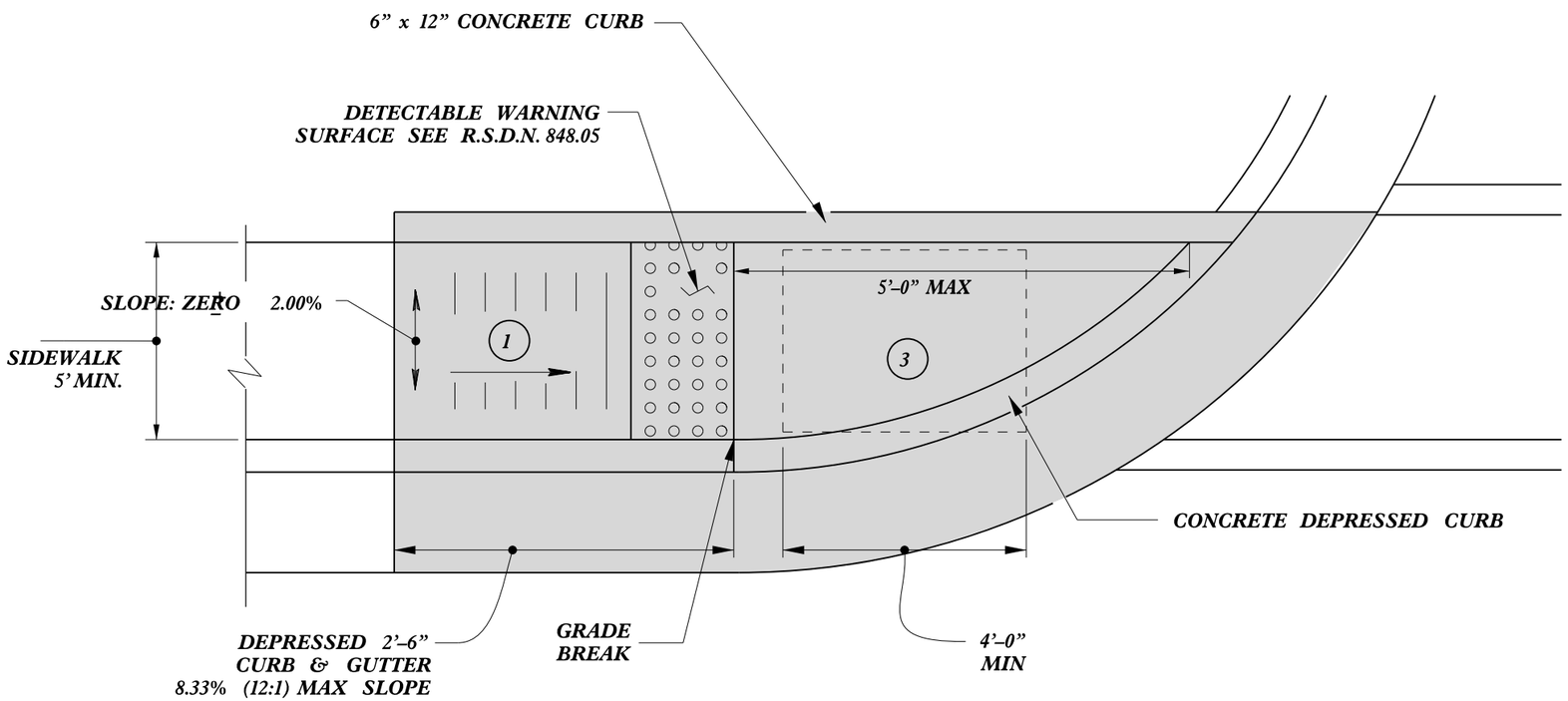

TYPE 1

REFER TO ROADWAY STANDARD DRAWING NUMBER 848.05 SHEET 3 OF 3 FOR ALL RAMP NOTES

NORTH CAROLINA PROFESSIONAL SEAL 022966 ENGINEER Joel S. Howerton

DocuSigned by: Joel Howerton 873F3D17DCDC45F...

10/29/2015

CONTRACT STANDARDS AND DEVELOPMENT UNIT
Office 919-707-6950 FAX 919-250-4119

CURB RAMPS

Directional Ramps

ORIGINAL BY: J.S. HOWERTON DATE: 7/7/11
MODIFIED BY: DATE:
CHECKED BY: DATE:
FILE SPEC.: stds/2012CurbRamp/CurbRampDetails.dgn

PROJECT REFERENCE NO.	SHEET NO.
43658	4

DIVISION DESIGN ENGINEER
NORTH CAROLINA PROFESSIONAL SEAL 030995 ENGINEER CHRISTOPHER A. SMITHERMAN

DocuSigned by: Christopher A. Smitherman
EA792653CDA446A...
10/29/2015

NOTE:
* PRIOR TO INSTALLATION THE DIVISION TRAFFIC OFFICE TO REVIEW THE LOCATION OF ALL PEDESTRIAN SIGNS & MARKINGS ASSOCIATED WITH THE CROSSWALK.
* ALL PROPOSED WCR'S ARE TYPE 1 UNLESS OTHERWISE NOTED

25' 0' 25' 50'
12.5'
(ENGLISH)

NAD 83/2011

BEGIN PROJECT 43658
BEGIN PROPOSED C&G &
PROPOSED SIDEWALK
STA. 16+23.21 RT. -L-

-L- POT 16+09.92 =
-Y- POT 10+00.00

ROBERT L. PERDUE
and wife AMY S. PERDUE
DB 1042 PG 770

MICHAEL E. PERDUE
and W. TODD PERDUE
DB 1309 PG 2135

MELISSA ANN SEILER
DB 1305 PG 1956

SHIRLEY B. ANGEL
DB 803 PG 2249

LEON L. JONES, WILLIAM B. JONES
and TIFFANY L. JONES
DB 1453 PG 685

ROCKINGHAM COUNTY
DB 769 PG 2434

ROCKINGHAM COUNTY
DB 713 PG 633

THOMAS S. HARRINGTON
DB 1033 PG 1834

NC 65 -L-
SR 2460 (TYRE DODSON RD) -Y-
MATCH LINE STA.17+13

EXISTING R/W
6.57' EIP TO R/W
5.28' R/W TO EIP
40.00'
7 5/8" BK WALL
WOOD PLANTER
GR DR
CONC
ISFD
PLAY HOUSE
15
3' MTL POLE
SIDE WALK
CONC PARKING
0.77' EIP TO R/W
ISFBUS
PAVED PARKING
0.61' R/W TO EIP
WOODS
PAVED
2SBK ARTS COUNCIL
BST CUR
GR PARKING
PROPOSED SIGNING
+40.68
32.00
WCR
S 47°52'36" W 151.19'
S 25°54'36" W 77.75'
S 73°39'36" W 33.00'
N 48°51'20" W 13.80'
S 42°47'44" W 139.09'
N 44°24'36" E 83.36'
60.00'
S 70°50'24" W 41.90'
S 47°06'38" W 51.92'
S 89°26'11" W 29.46'
N 48°45'08" W 15.38'
0.22' EIP TO R/W
N 01°41'59" E 61.84'
N 84°17'53" W 105.94'
N 84°38'23" W 42.19'
N 84°02'00" W 19.05'
EIP

REVISIONS
8/17/99

29-OCT-2015 08:44
S:\OPC_Rockingham\43658 - NC65 @ Old Rock Crt house\Roadway\Proj\Opt 3_Minimum Impact_to Church Property_10.5.15\43658_RDY_PSH4.dgn
$$$$USERNAME$$$$

PROJECT REFERENCE NO.	SHEET NO.
43658	5

DIVISION DESIGN ENGINEER

NORTH CAROLINA PROFESSIONAL SEAL 030995 ENGINEER CHRISTOPHER R. SMITHERMAN

DocuSigned by: Chris Smitherman EA7926E3CDA446A...

10/29/2015

25' 0' 25' 50'
12.5'
(ENGLISH)

NAD 83/2011

NOTE:
* PRIOR TO INSTALLATION THE DIVISION TRAFFIC OFFICE TO REVIEW THE LOCATION OF ALL PEDESTRIAN SIGNS & MARKINGS ASSOCIATED WITH THE CROSSWALK.
* ALL PROPOSED WCR'S ARE TYPE 1 UNLESS OTHERWISE NOTED

STANLEY L. ALLEN
DB 1043 PG 555

ROCKINGHAM COUNTY
DB 200
PG 558

ROCKINGHAM COUNTY HISTORICAL SOCIETY, INC
DB 680 PG 701

WENTWORTH PRESBYTERIAN CHURCH
DB 1453 PG 1147
DB 819 PG 1218

WENTWORTH PRESBYTERIAN CHURCH
DB 1005 PG 355

DANIEL K. BAILEY
DB 1096 PG 21

IRIS SMITH POWELL
DB 474 PG 226

TRUETTE C. PARLEIR and MOZELLE PARLEIR
DB 709 PG 912

ROCKINGHAM COUNTY
DB 713 PG 633

S 35°39'34" W 380.07'
S 25°15'38" W 267.99'
N 30°58'18" E 397.21'
S 14°43'18" W 400.13'
N 14°43'17" E 410.94'
2°47'44" W 139.09'
S 35°40'32" E 142.47'
N 16°10'04" E 95.12'
S 05°51'34" W 142.28'
N 05°51'34" E 176.34'
S 05°21'34" W 301.23'
S 84°08'26" E 4.00'
S 01°26'26" E 57.20'
S 84°18'26" E 132.40'
N 05°28'52" E 40.33'

+38.07
-33.00

BEGIN PROPOSED C&G & PROPOSED SIDEWALK
STA. 17+40.39 LT. -L-

+33.25
-32.95

+25.33
-33.00

PROPOSED SIGNING & SOLAR POWERED FLASHER
W11-2
W16-7pL

+37.21
-45.44

PROPOSED WCR, TYPE 1 FLUSH WITH ASHPALT DRWY.

END PROPOSED C&G & PROPOSED SIDEWALK
STA. 19+44.30 LT. -L-

END PROJECT 43658
STA. 19+69.31 LT. -L-

PROPOSED SIGNING

+32.02
-43.01

+08.50
-25.05

+59.64
-25.00

MATCH LINE STA.17+13

NC 65 -L-

REMOVE EX. PIPE

CB
12" RCP, CL IV
69 LF

+38.17
32.10

+90.82
28.00

+90.25
28.00

END PROPOSED C&G & PROPOSED SIDEWALK
STA. 18+91.58 RT. -L-

PROPOSED SIGNING & SOLAR POWERED FLASHER
W11-2
W16-7pL

10' PROPOSED CROSSWALK & TYPE 2 WCR EACH SIDE

0.77' EIP TO R/W

3SBK OLD JAIL
7⅛" CONC WALL
ABANDONED WELL
2SFBUS
2SF POST OFFICE
1-1/2SFD
2SFD
PARKING LOT
WOOD HANDYCAP RAMP
GRAVEL PARKING
STONE WK
CONC. MON
FLAG POLE
WV VAULT
PAVED PARKING
MONUMENT
2SBK OLD COURT HOUSE
HISTORICAL ROCK TABLE
HITCHING POST
F/O BOX
PLANTER
RR SPIKE
15" RCP DIRECTION ONLY
EXISTING R/W
40.00' R/W
GR PARKING
PAVED DR
12" RCP
12" CMP
BST CURB
CONC CURB
CONC RAMP
PAVED RAMP
30.07' EIP TO R/W N 35°40'32" E 142.47'

REVISIONS

8/17/99

29-OCT-2015 08:44
S:\DOC_B-Rockingham\43658 - NC65 @ Old Rock Crt house\Roadway\Proj\Opt 3_Minimum Impact_to Church Property_10_5_15\43658_RDY_PSH5.dgn
$$$$USERNAME$$$$

PROJ. REFERENCE NO.	SHEET NO.
43658	X-1

0 2.5 5

Note: Approximate quantities only. Unclassified Excavation, Borrow Excavation, Shoulder Borrow, Fine Grading, Clearing and Grubbing, Breaking of Existing Pavement, and Removal of Existing Pavement will be paid for at the contract lump sum price for "Grading."

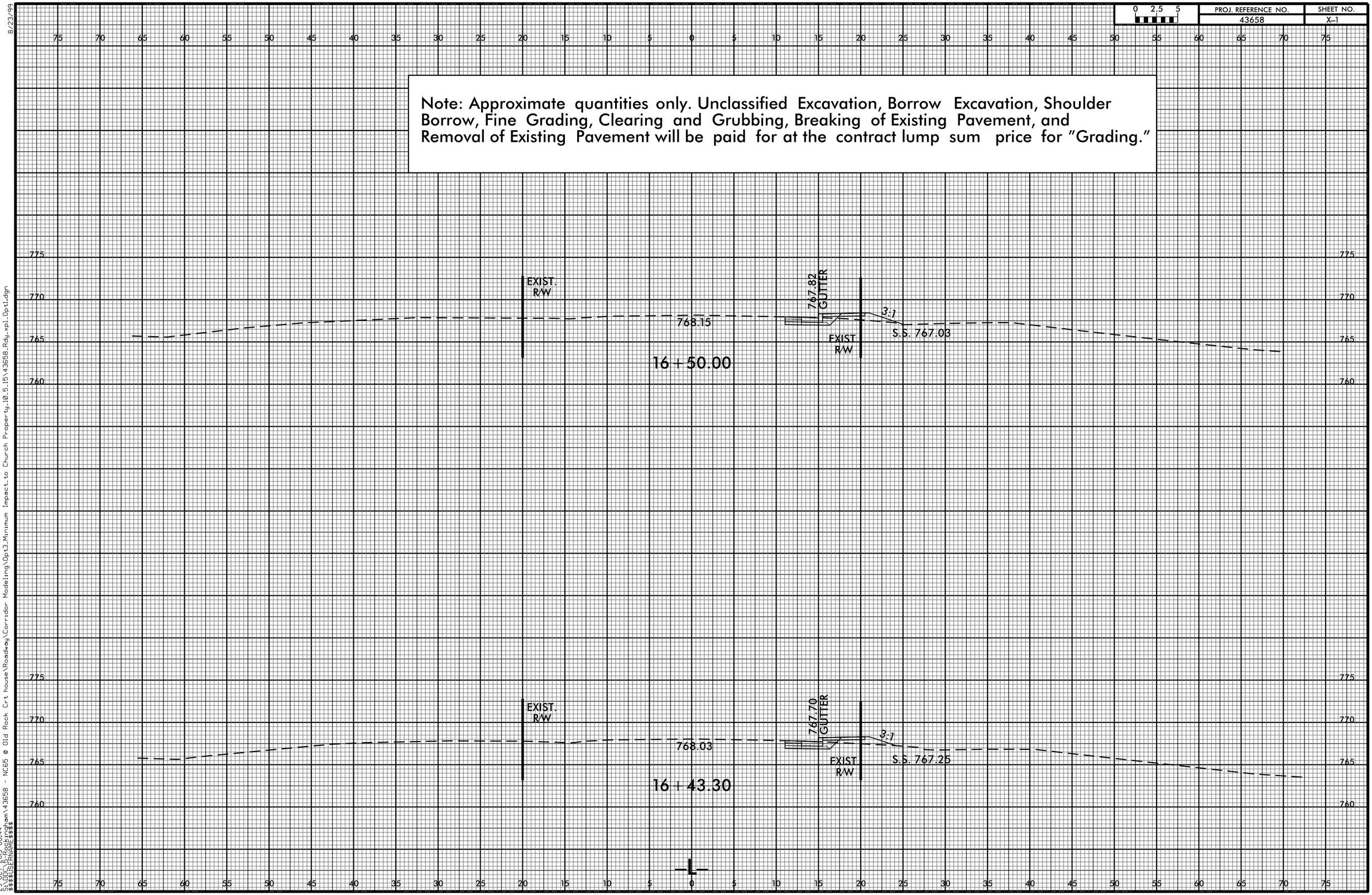

8/23/99
29-OCT-2015 08:44
S:\DOC_&_Rockingham\43658 - NC65 @ Old Rock Crt house\Roadway\Corridor Modeling\Opt3_Minimum Impact to Church Property_10.5_15\43658_Rdy_xpl_Opt1.dgn
$$$$USERNAME$$$$

0 2.5 5	PROJ. REFERENCE NO.	SHEET NO.
	43658	X-2

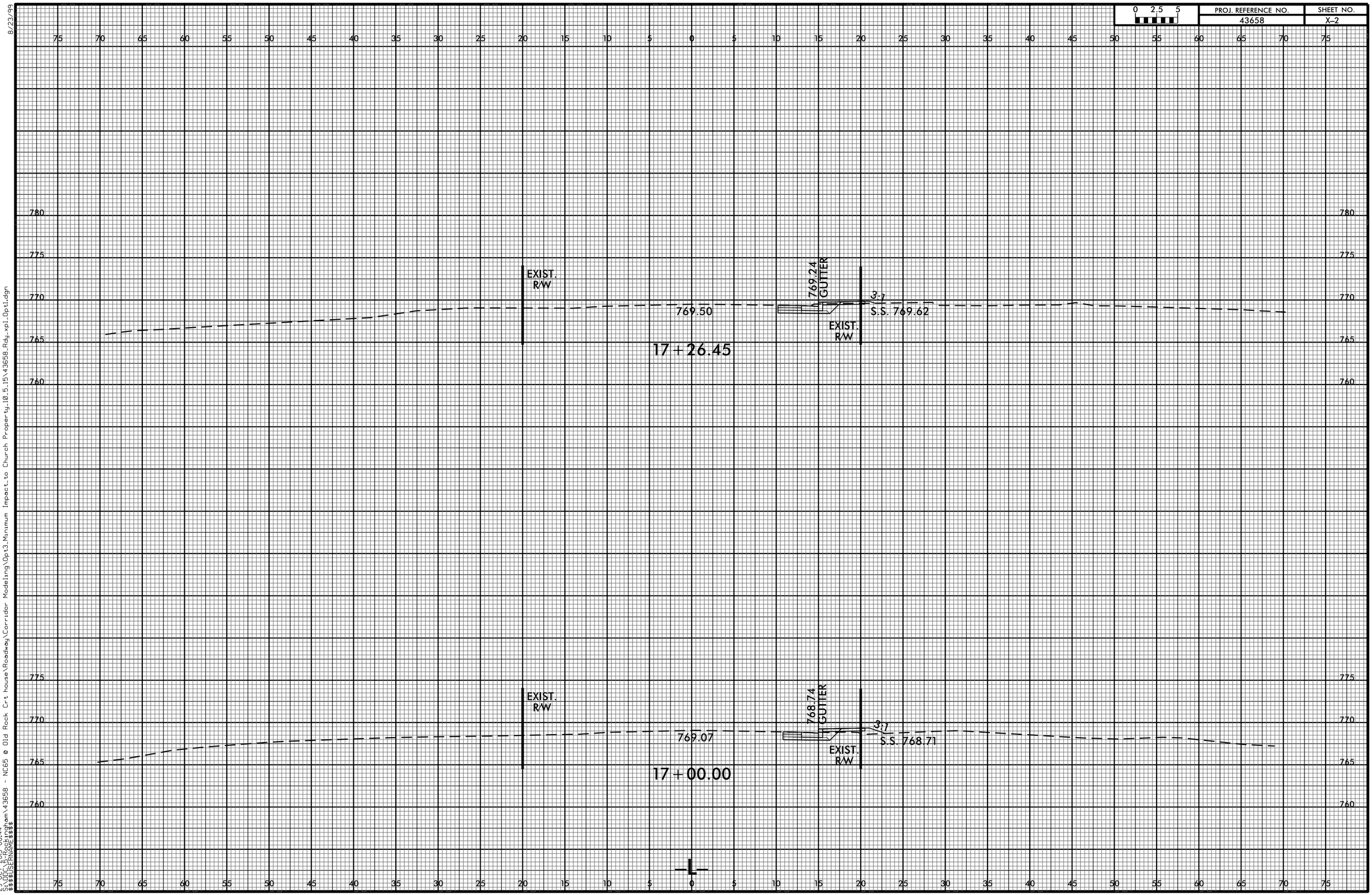

8/23/99
29-OCT-2015 08:44
S:\DOC_&_Rockingham\43658 - NC65 @ Old Rock Crt house\Roadway\Corridor Modeling\Opt3_Minimum Impact to Church Property_10.5_15\43658_Rdy_xpl_Opt1.dgn
$$$$USERNAME$$$$

0 2.5 5	PROJ. REFERENCE NO.	SHEET NO.
	43658	X-3

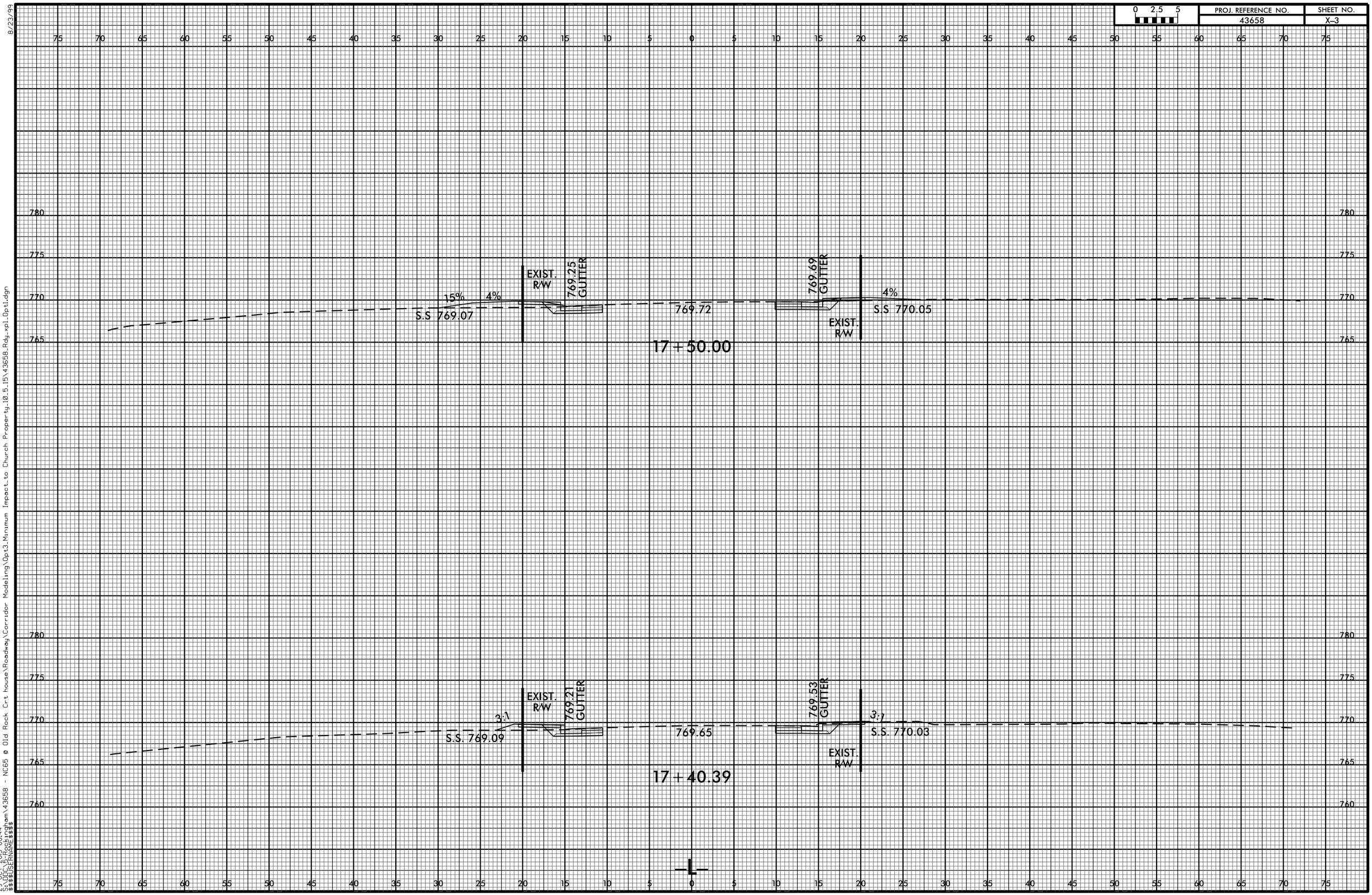

8/23/99

29-OCT-2015 08:44
S:\DOC_&_Rockingham\43658 - NC65 @ Old Rock Crt house\Roadway\Corridor Modeling\Opt3_Minimum Impact to Church Property_10.5_15\43658_Rdy_xpl_Opt1.dgn
$$$$USERNAME$$$$

0 2.5 5	PROJ. REFERENCE NO.	SHEET NO.
	43658	X-4

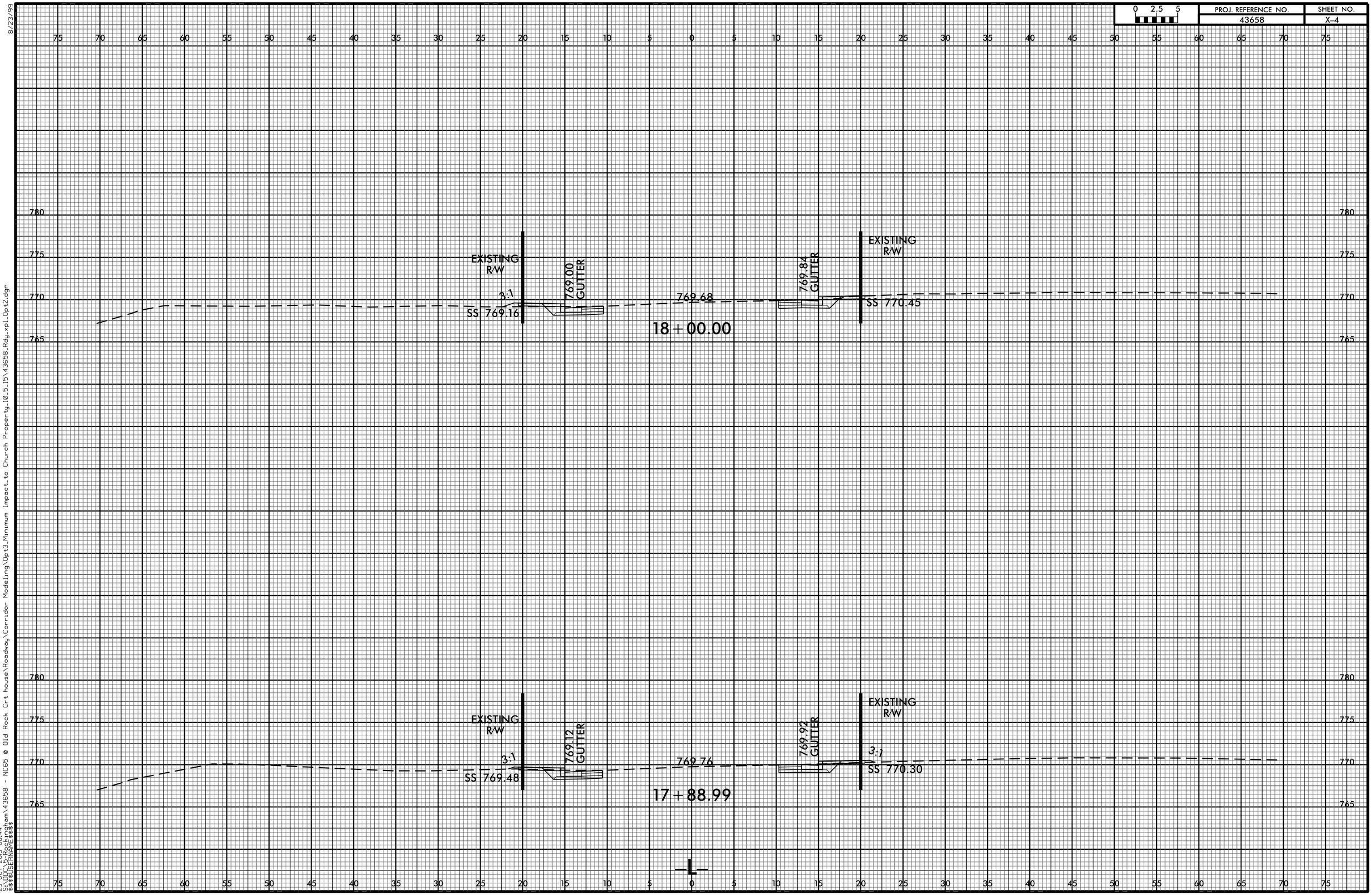

8/23/99
29-OCT-2015 08:44
S:\DOC_&_Rockingham\43658 - NC65 @ Old Rock Crt house\Roadway\Corridor Modeling\Opt3_Minimum Impact to Church Property_10.5_15\43658_Rdy_xpl_Opt2.dgn
$$$$USERNAME$$$$

0 2.5 5	PROJ. REFERENCE NO.	SHEET NO.
	43658	X-5

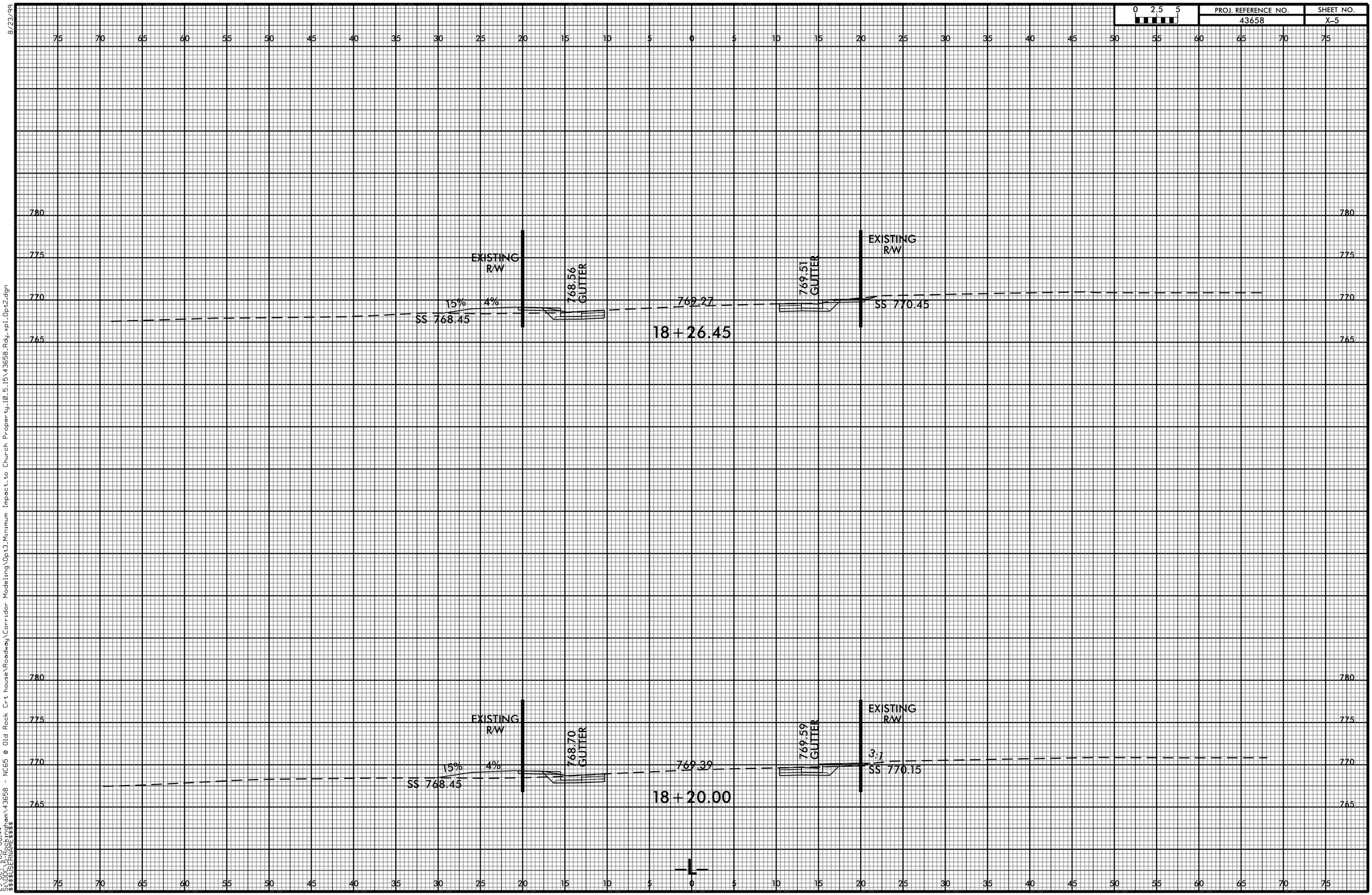

8/23/99

29-OCT-2015 08:44
S:\DOC_&_Rockingham\43658 - NC65 @ Old Rock Crt house\Roadway\Corridor Modeling\Opt3_Minimum Impact to Church Property\10_5_15\43658_Rdy_xpl_Opt2.dgn
$$$$USERNAME$$$$

0 2.5 5	PROJ. REFERENCE NO.	SHEET NO.
	43658	X-6

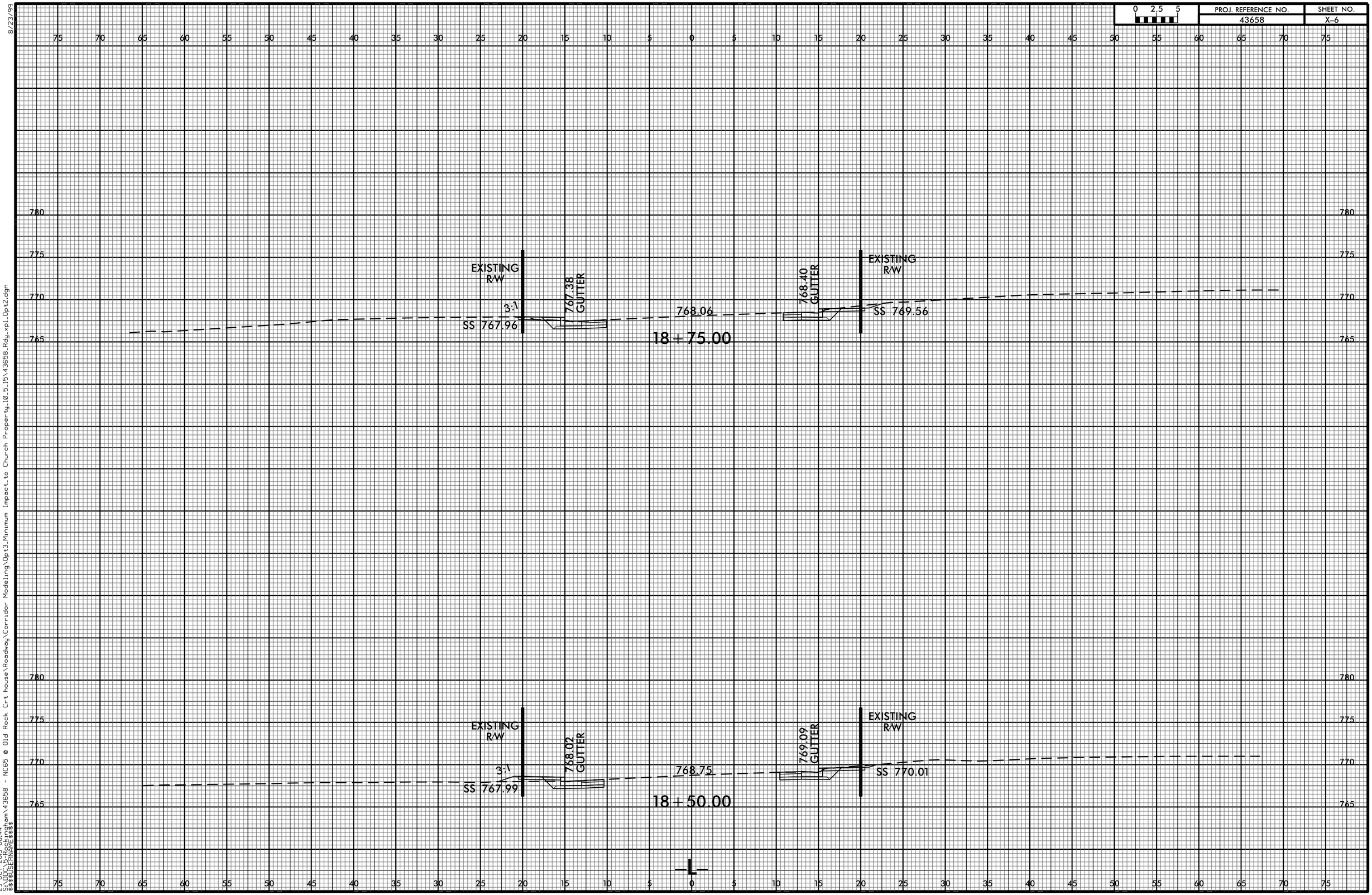

8/23/99

29-OCT-2015 08:44
S:\DOC_E-Rockingham\43658 - NC65 @ Old Rock Crt house\Roadway\Corridor Modeling\Opt3_Minimum Impact to Church Property_10.5_15\43658_Rdy_xpl_Opt2.dgn
$$$$USERNAME$$$$

0 2.5 5	PROJ. REFERENCE NO.	SHEET NO.
	43658	X-7

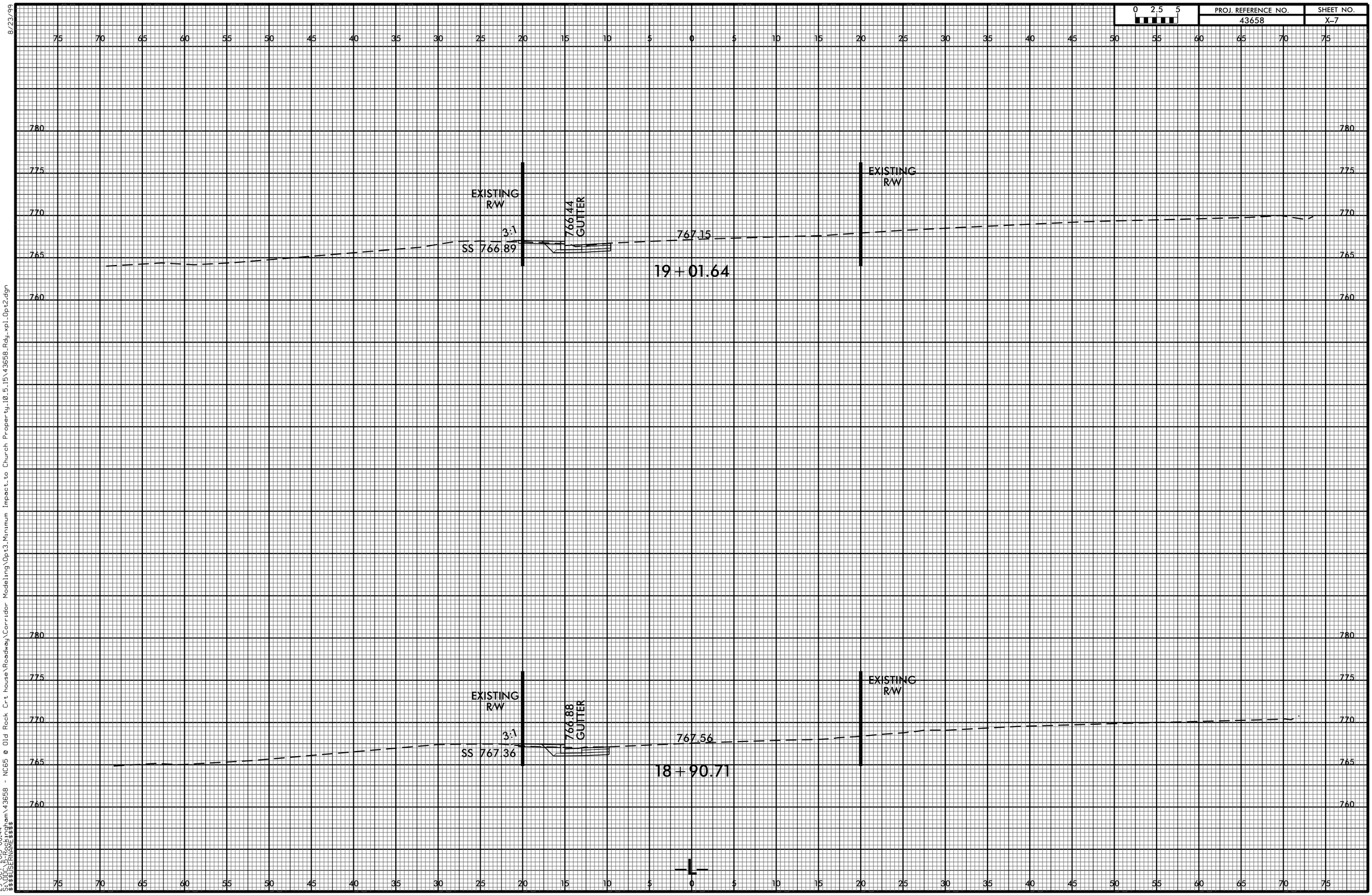

8/23/99

29-OCT-2015 08:44
S:\DOC_&_Rockingham\43658 - NC65 @ Old Rock Crt house\Roadway\Corridor Modeling\Opt3_Minimum Impact to Church Property_10.5_15\43658_Rdy_xpl_Opt2.dgn
$$$$USERNAME$$$$

PROJ. REFERENCE NO.	SHEET NO.
43658	X-8

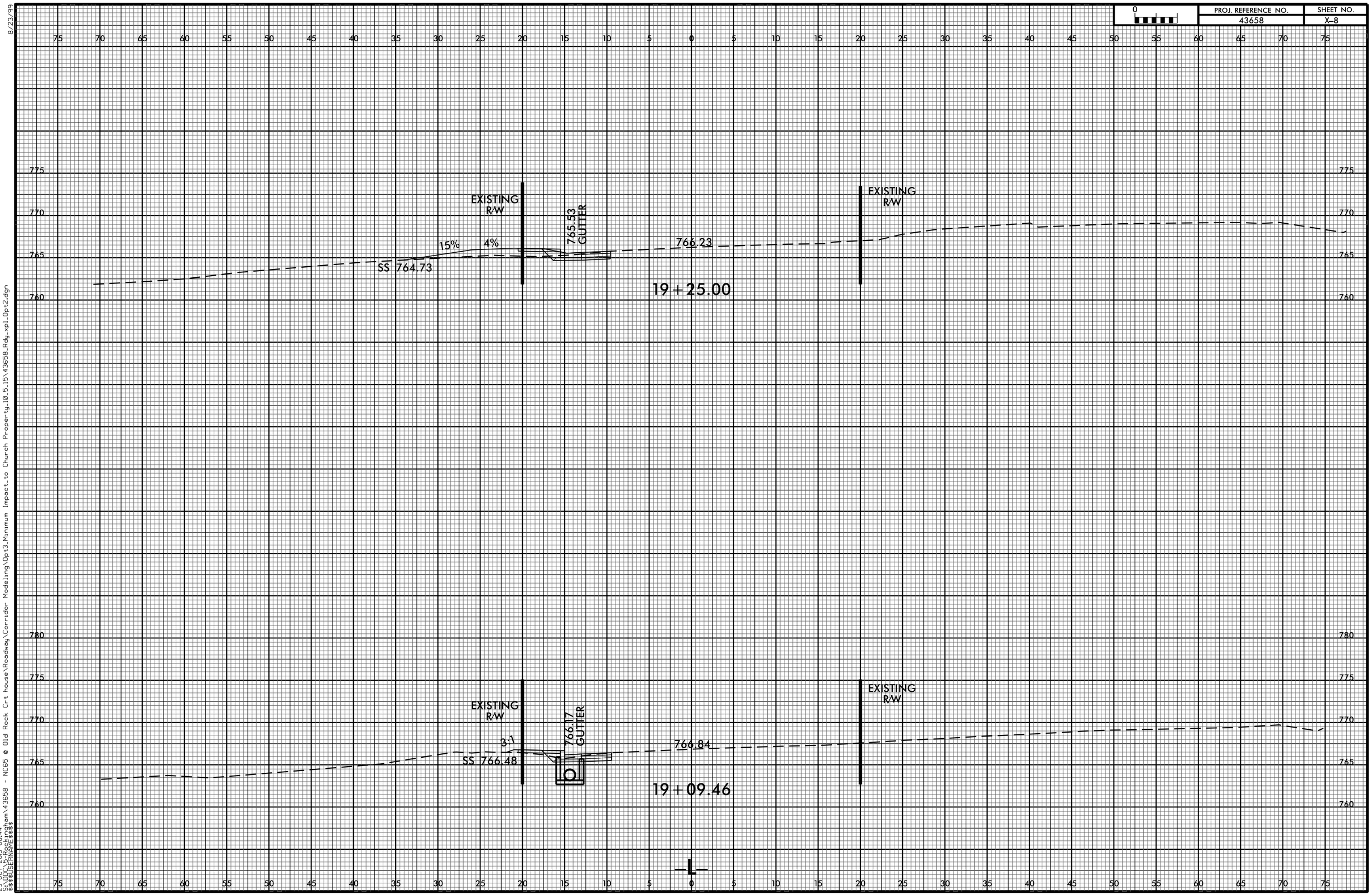

8/23/99

29-OCT-2015 08:44
S:\DOC_E-Rockingham\43658 - NC65 @ Old Rock Crt house\Roadway\Corridor Modeling\Opt3_Minimum Impact to Church Property_10.5_15\43658_Rdy_xpl_Opt2.dgn
$$$$USERNAME$$$$

STATE	STATE PROJECT REFERENCE NO.	SHEET NO.	TOTAL SHEETS
N.C.	43658	EC–1	6

STATE PROJ. NO.	F. A. PROJ. NO.	DESCRIPTION
43658		P.E.
43658		R/W
43658		UTILITIES
43658		CONSTRUCTION

STATE OF NORTH CAROLINA
DIVISION OF HIGHWAYS

PLAN FOR PROPOSED HIGHWAY EROSION CONTROL

ROCKINGHAM COUNTY

LOCATION: *NC 65 – FROM SR 2460 (TYRE DODSON RD.) TO APPROX. 479 FT. SOUTHEAST OF SR 2460 (TYRE DODSON RD.)*

TYPE OF WORK: *GRADING, PAVING, CURB & GUTTER, DRAINAGE AND SIGNAGE*

THESE EROSION AND SEDIMENT CONTROL PLANS COMPLY WITH THE REGULATIONS SET FORTH BY THE NCG–010000 GENERAL CONSTRUCTION PERMIT EFFECTIVE AUGUST 3, 2011 ISSUED BY THE NORTH CAROLINA DEPARTMENT OF ENVIRONMENT AND NATURAL RESOURCES DIVISION OF WATER QUALITY.

EROSION CONTROL MUST BE STABILIZED WITHIN 30 DAYS FROM THE TIME CLEARING & GRUBBING BEGINS.

NOTES:
ANY DEVIATION FROM OPTIONS GIVEN WILL REQUIRE PRIOR APPROVAL BY ENGINEER.

ADDITIONAL EROSION CONTROL DEVICES MAY NEED TO BE INSTALLED AS DIRECTED BY THE ENGINEER.

EROSION AND SEDIMENT CONTROL MEASURES

Std. #	Description	Symbol
1630.03	Temporary Silt Ditch	TSD
1630.05	Temporary Diversion	TD
1605.01	Temporary Silt Fence	
1606.01	Special Sediment Control Fence	
1622.01	Temporary Berms and Slope Drains	
	Silt Basin Type B	
1633.01	Temporary Rock Silt Check Type–A	
	Temporary Rock Silt Check Type–A with Matting and Polyacrylamide (PAM)	
1633.02	Temporary Rock Silt Check Type–B	
	Wattle/Coir Fiber Wattle	SW CFW
	Wattle/Coir Fiber Wattle with Polyacrylamide (PAM)	
1634.01	Temporary Rock Sediment Dam Type–A	
1634.02	Temporary Rock Sediment Dam Type–B	
1635.01	Rock Pipe Inlet Sediment Trap Type–A	C
1635.02	Rock Pipe Inlet Sediment Trap Type–B	C
1630.04	Stilling Basin	
1630.06	Special Stilling Basin	
	Rock Inlet Sediment Trap:	
1632.01	Type A	A
1632.02	Type B	B
1632.03	Type C	C
	Skimmer Basin	
	Tiered Skimmer Basin	
	Infiltration Basin	

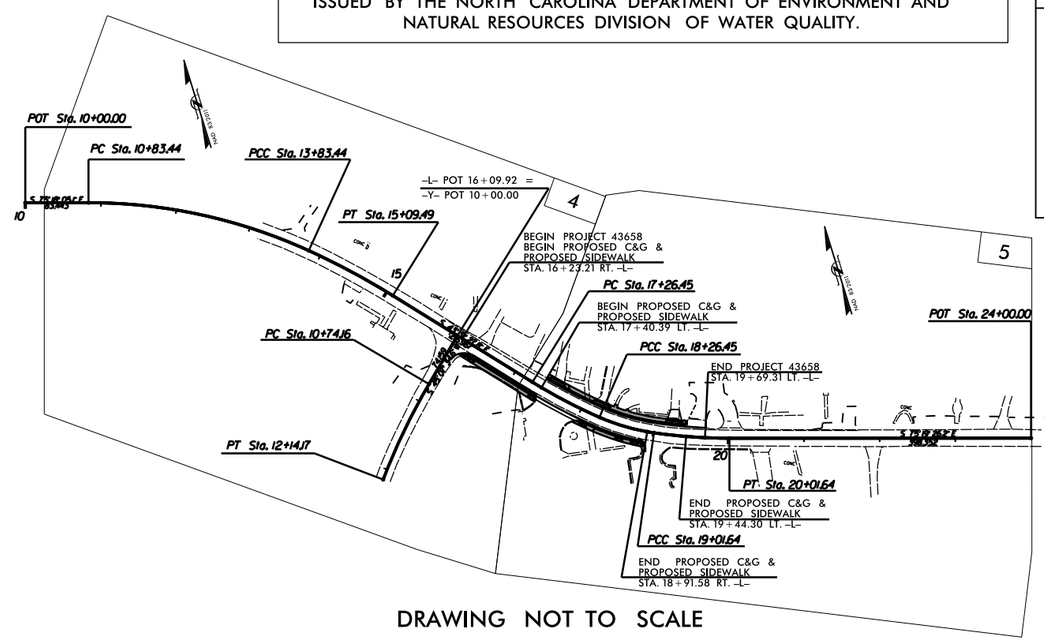

DRAWING NOT TO SCALE

VICINITY MAP

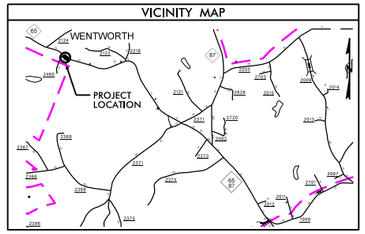

GRAPHIC SCALES

25 12.5 0 25 50
PLANS

50 25 0 50 100
PROFILE (HORIZONTAL)

5 2.5 0 5 10
PROFILE (VERTICAL)

Roadway Standard Drawings: The following roadway english standards as appear in "Roadway Standard Drawings"- Roadway Design Unit - N. C. Department of Transportation - Raleigh, N. C., dated January 2012 and the latest revision thereto are applicable to this project and by reference hereby are considered a part of these plans.

1605.01	Temporary Silt Fence	1632.01	Rock Inlet Sediment Trap Type A
1606.01	Special Sediment Control Fence	1632.02	Rock Inlet Sediment Trap Type B
1607.01	Gravel Construction Entrance	1632.03	Rock Inlet Sediment Trap Type C
1622.01	Guide for Temporary Berms & Slope Drains	1633.01	Temporary Rock Silt Check Type A
1630.01	Riser Basin	1633.02	Temporary Rock Silt Check Type B
1630.02	Silt Basin Type B	1634.01	Temporary Rock Sediment Dam Type A
1630.03	Temporary Silt Ditch	1634.02	Temporary Rock Sediment Dam Type B
1630.04	Stilling Basin for Pumped Effluent	1635.01	Rock Pipe Inlet Sediment Trap Type A
1630.05	Temporary Diversion	1635.02	Rock Pipe Inlet Sediment Trap Type B
1630.06	Special Stilling Basin	1640.01	Coir Fiber Baffle
1631.33	Matting Installation	1645.01	Temporary Stream Crossing

Prepared In the Office of:
DIVISION OF HIGHWAYS
1584 YANCEYVILLE STREET, GREENSBORO, NC 27405

2012 STANDARD SPECIFICATIONS

RIGHT OF WAY DATE: N/A

LETTING DATE: DEC, 2015

C.B. SMITHERMAN
DDC ENGINEER

J.A. SOUR
PROJECT DESIGN TECHNICIAN
LEVEL III – A
CERTIFICATION # 658

CONTRACT:

TIP PROJECT: 43658

09/08/99

29-OCT-2015 08:44
S:\DDC\5-Rockingham\43658 - NC65 @ Old Rock Crt house\Environmental\Op13_Minimum Impact _to Church Property_10_5_15\43658_EC_TSH.dgn
$$$$USERNAME$$$$

PROJECT REFERENCE NO.	SHEET NO.
43658	EC – 2

SILT FENCE WATTLE BREAK DETAIL

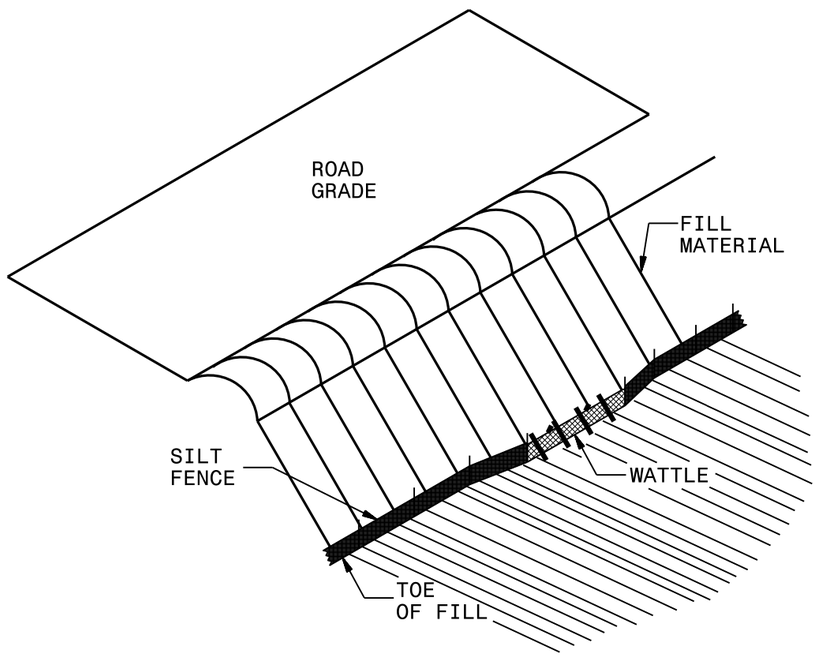

ISOMETRIC VIEW

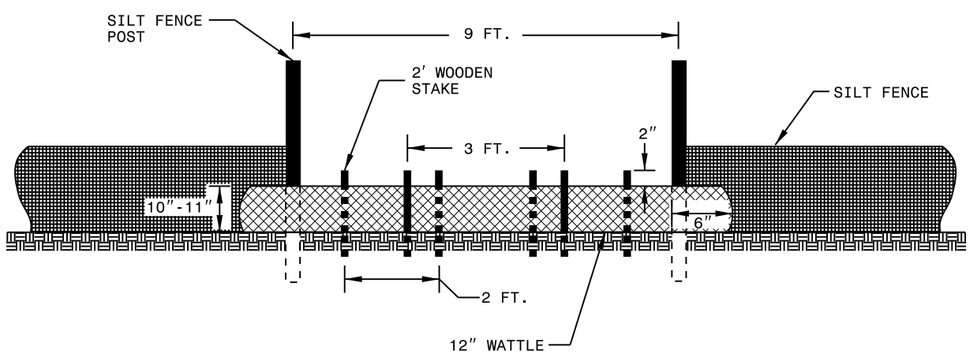

VIEW FROM SLOPE

NOTES:

USE MINIMUM 12 IN. DIAMETER EXCELSIOR WATTLE AND LENGTH OF 10 FT.

EXCAVATE A 1 TO 2 INCH TRENCH FOR WATTLE TO BE PLACED.

DO NOT PLACE WATTLE ON TOE OF SLOPE.

USE 2 FT. WOODEN STAKES WITH A 2 IN. BY 2 IN. NOMINAL CROSS SECTION.

INSTALL A MINIMUM OF 2 UPSLOPE STAKES AND 4 DOWNSLOPE STAKES AT AN ANGLE TO WEDGE WATTLE TO GROUND.

PROVIDE STAPLES MADE OF 0.125 IN. DIAMETER STEEL WIRE FORMED INTO A U SHAPE NOT LESS THAN 12″ IN LENGTH.

INSTALL STAPLES APPROXIMATELY EVERY 1 LINEAR FOOT ON BOTH SIDES OF WATTLE AND AT EACH END TO SECURE IT TO THE SOIL.

WATTLE INSTALLATION CAN BE ON OUTSIDE OF THE SILT FENCE AS DIRECTED.

INSTALL TEMPORARY SILT FENCE IN ACCORDANCE WITH SECTION 1605 OF THE STANDARD SPECIFICATIONS.

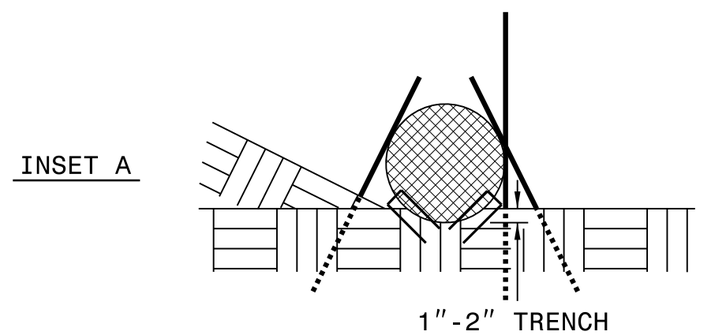

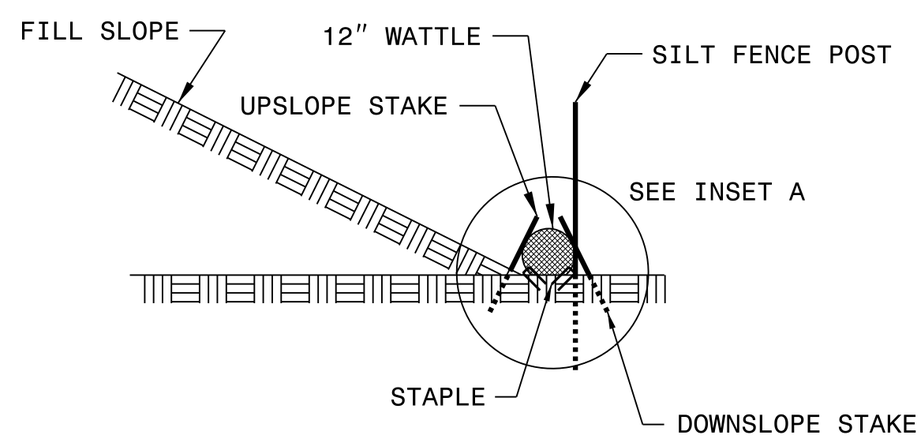

SIDE VIEW

PROJECT REFERENCE NO.	SHEET NO.
43658	EC – 2A

WATTLE WITH POLYACRYLAMIDE (PAM) DETAIL

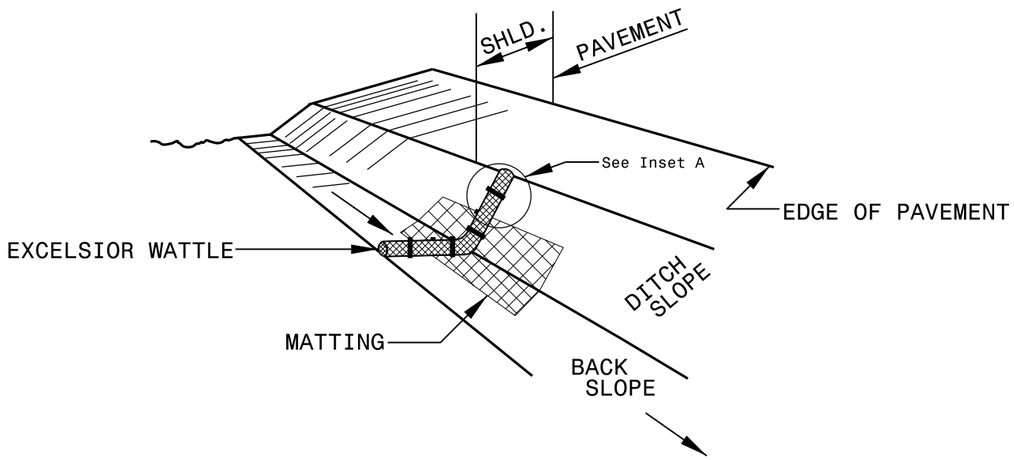

ISOMETRIC VIEW

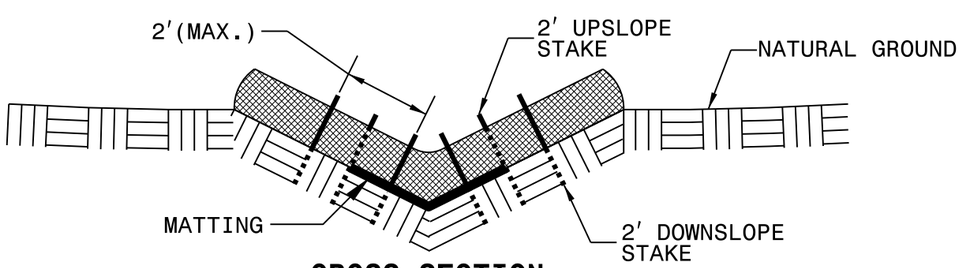

CROSS SECTION VEE DITCH

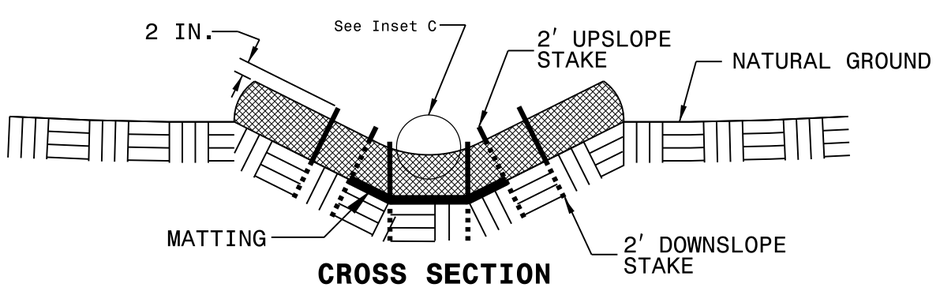

CROSS SECTION TRAPEZOIDAL DITCH

NOTES:

USE MINIMUM 12 IN. DIAMETER EXCELSIOR WATTLE.

USE 2 FT. WOODEN STAKES WITH A 2 IN. BY 2 IN. NOMINAL CROSS SECTION.

ONLY INSTALL WATTLE(S) TO A HEIGHT IN DITCH SO FLOW WILL NOT WASH AROUND WATTLE AND SCOUR DITCH SLOPES AND AS DIRECTED.

INSTALL A MINIMUM OF 2 UPSLOPE STAKES AND 4 DOWNSLOPE STAKES AT AN ANGLE TO WEDGE WATTLE TO BOTTOM OF DITCH.

PROVIDE STAPLES MADE OF 0.125 IN. DIAMETER STEEL WIRE FORMED INTO A U SHAPE NOT LESS THAN 12″ IN LENGTH.

INSTALL STAPLES APPROXIMATELY EVERY 1 LINEAR FOOT ON BOTH SIDES OF WATTLE AND AT EACH END TO SECURE IT TO THE SOIL.

INSTALL MATTING IN ACCORDANCE WITH SECTION 1631 OF THE STANDARD SPECIFICATIONS.

PRIOR TO POLYACRYLAMIDE (PAM) APPLICATION, OBTAIN A SOIL SAMPLE FROM PROJECT LOCATION, AND FROM OFFSITE MATERIAL, AND ANALYZE FOR APPROPRIATE PAM FLOCCULANT TO BE APPLIED TO EACH WATTLE.

INITIALLY APPLY 2 OUNCES OF ANIONIC OR NEUTRALLY CHARGED PAM OVER WATTLE WHERE WATER WILL FLOW AND 1 OUNCE OF PAM ON MATTING ON EACH SIDE OF WATTLE. REAPPLY PAM AFTER EVERY RAINFALL EVENT THAT IS EQUAL TO OR EXCEEDS 0.50 IN.

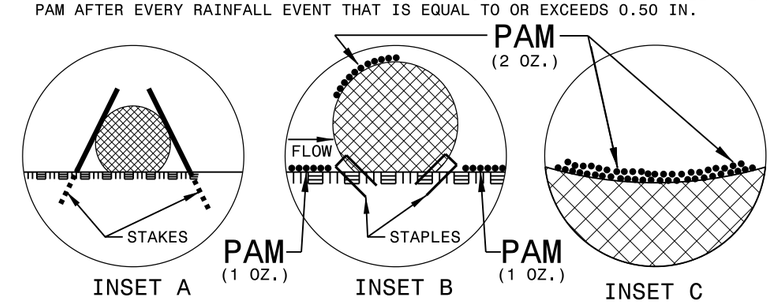

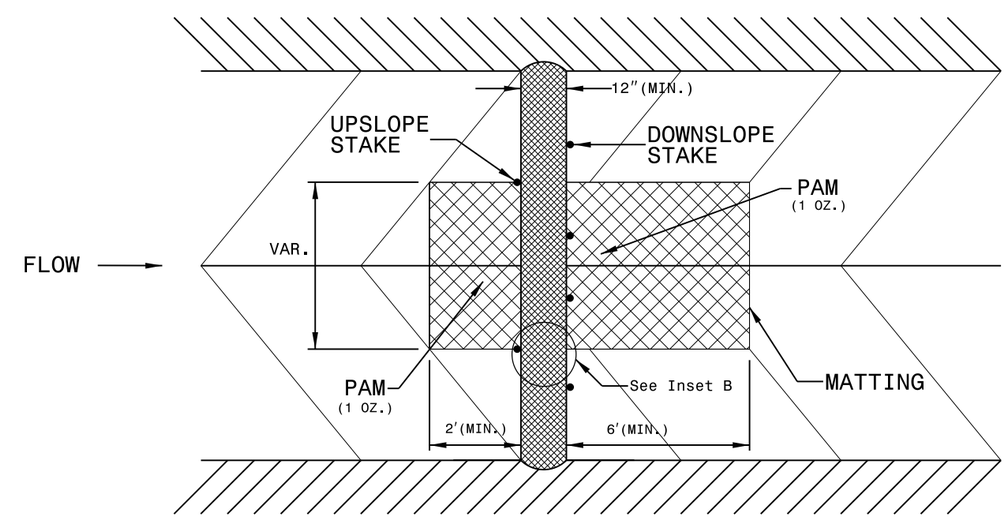

TOP VIEW

5/14/99

29-OCT-2015 08:44
house\Environmental\Opt3_Minimum Impact _to Church Property_10_5_15\43658_EC_PSH2A.dgn
$$$$USERNAME$$$$

PROJECT REFERENCE NO.	SHEET NO.
43658	EC – 2B

WATTLE DETAIL

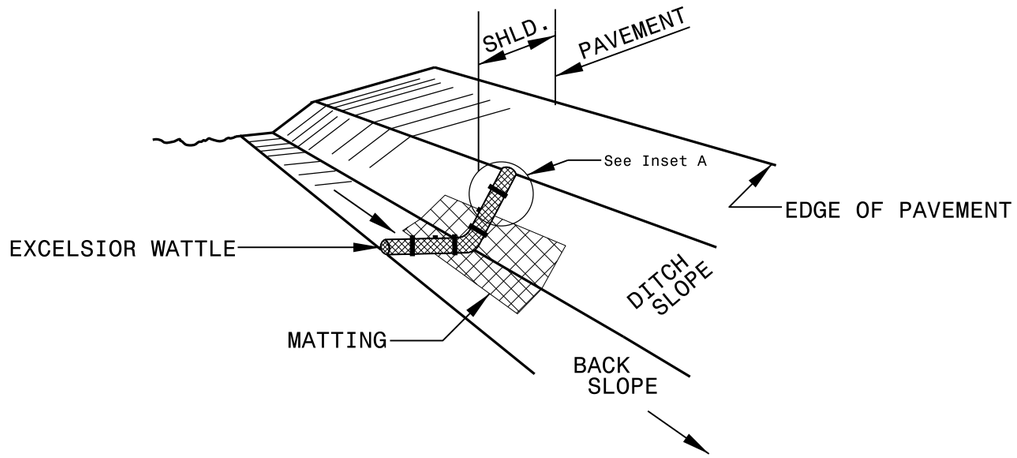

ISOMETRIC VIEW

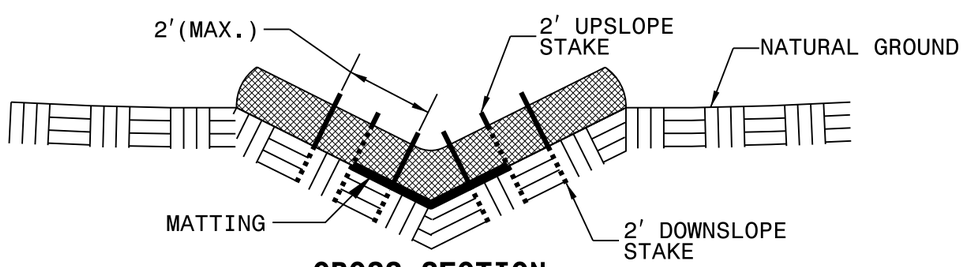

CROSS SECTION VEE DITCH

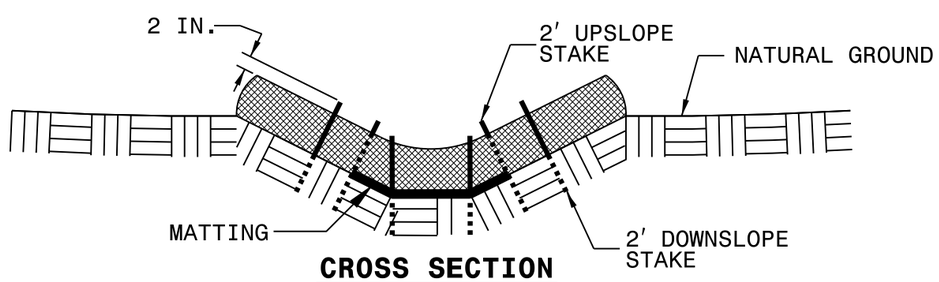

CROSS SECTION TRAPEZOIDAL DITCH

NOTES:

USE MINIMUM 12 IN. DIAMETER EXCELSIOR WATTLE.

USE 2 FT. WOODEN STAKES WITH A 2 IN. BY 2 IN. NOMINAL CROSS SECTION.

ONLY INSTALL WATTLE(S) TO A HEIGHT IN DITCH SO FLOW WILL NOT WASH AROUND WATTLE AND SCOUR DITCH SLOPES AND AS DIRECTED.

INSTALL A MINIMUM OF 2 UPSLOPE STAKES AND 4 DOWNSLOPE STAKES AT AN ANGLE TO WEDGE WATTLE TO BOTTOM OF DITCH.

PROVIDE STAPLES MADE OF 0.125 IN. DIAMETER STEEL WIRE FORMED INTO A U SHAPE NOT LESS THAN 12″ IN LENGTH.

INSTALL STAPLES APPROXIMATELY EVERY 1 LINEAR FOOT ON BOTH SIDES OF WATTLE AND AT EACH END TO SECURE IT TO THE SOIL.

INSTALL MATTING IN ACCORDANCE WITH SECTION 1631 OF THE STANDARD SPECIFICATIONS.

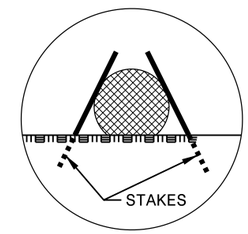

INSET A

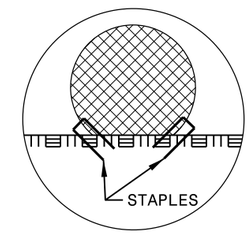

INSET B

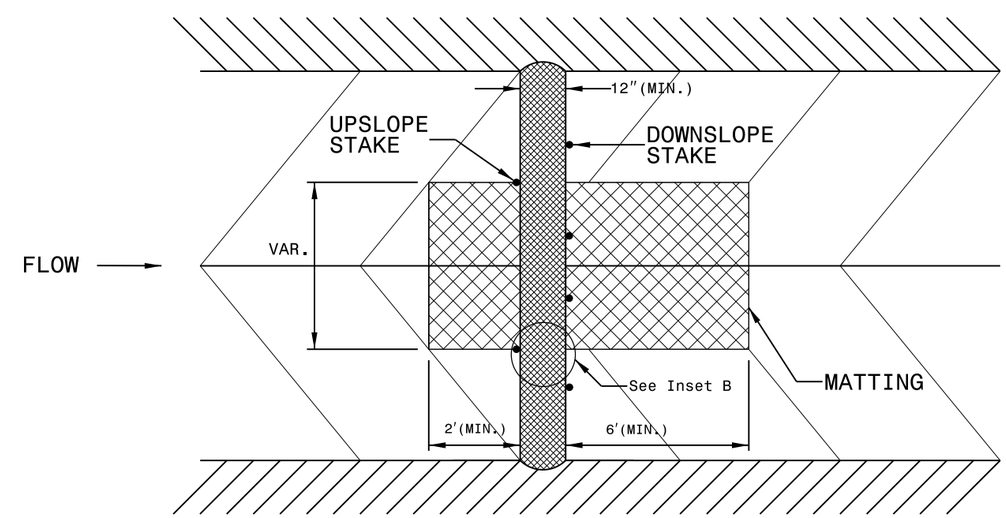

TOP VIEW

5/14/99
29-OCT-2015 08:44
house\Environmental\Opt3.Minimum Impact .to Church Property.10.5.15\43658.EC.PSH2B.dgn
$$$$USERNAME$$$$

PROJECT REFERENCE NO.	SHEET NO.
43658	EC – 2C

DIVISION OF HIGHWAYS
STATE OF NORTH CAROLINA

SOIL STABILIZATION TIMEFRAMES

SITE DESCRIPTION	STABILIZATION TIME	TIMEFRAME EXCEPTIONS
PERIMETER DIKES, SWALES, DITCHES AND SLOPES	7 DAYS	NONE
HIGH QUALITY WATER (HQW) ZONES	7 DAYS	NONE
SLOPES STEEPER THAN 3:1	7 DAYS	IF SLOPES ARE 10′ OR LESS IN LENGTH AND ARE NOT STEEPER THAN 2:1, 14 DAYS ARE ALLOWED.
SLOPES 3:1 OR FLATTER	14 DAYS	7 DAYS FOR SLOPES GREATER THAN 50′ IN LENGTH.
ALL OTHER AREAS WITH SLOPES FLATTER THAN 4:1	14 DAYS	NONE, EXCEPT FOR PERIMETERS AND HQW ZONES.

PROJECT REFERENCE NO.	SHEET NO.
43658	EC – 4

NOTE:
* PRIOR TO INSTALLATION THE DIVISION TRAFFIC OFFICE TO REVIEW THE LOCATION OF ALL PEDESTRIAN SIGNS & MARKINGS ASSOCIATED WITH THE CROSSWALK.
* ALL PROPOSED WCR'S ARE TYPE 1 UNLESS OTHERWISE NOTED

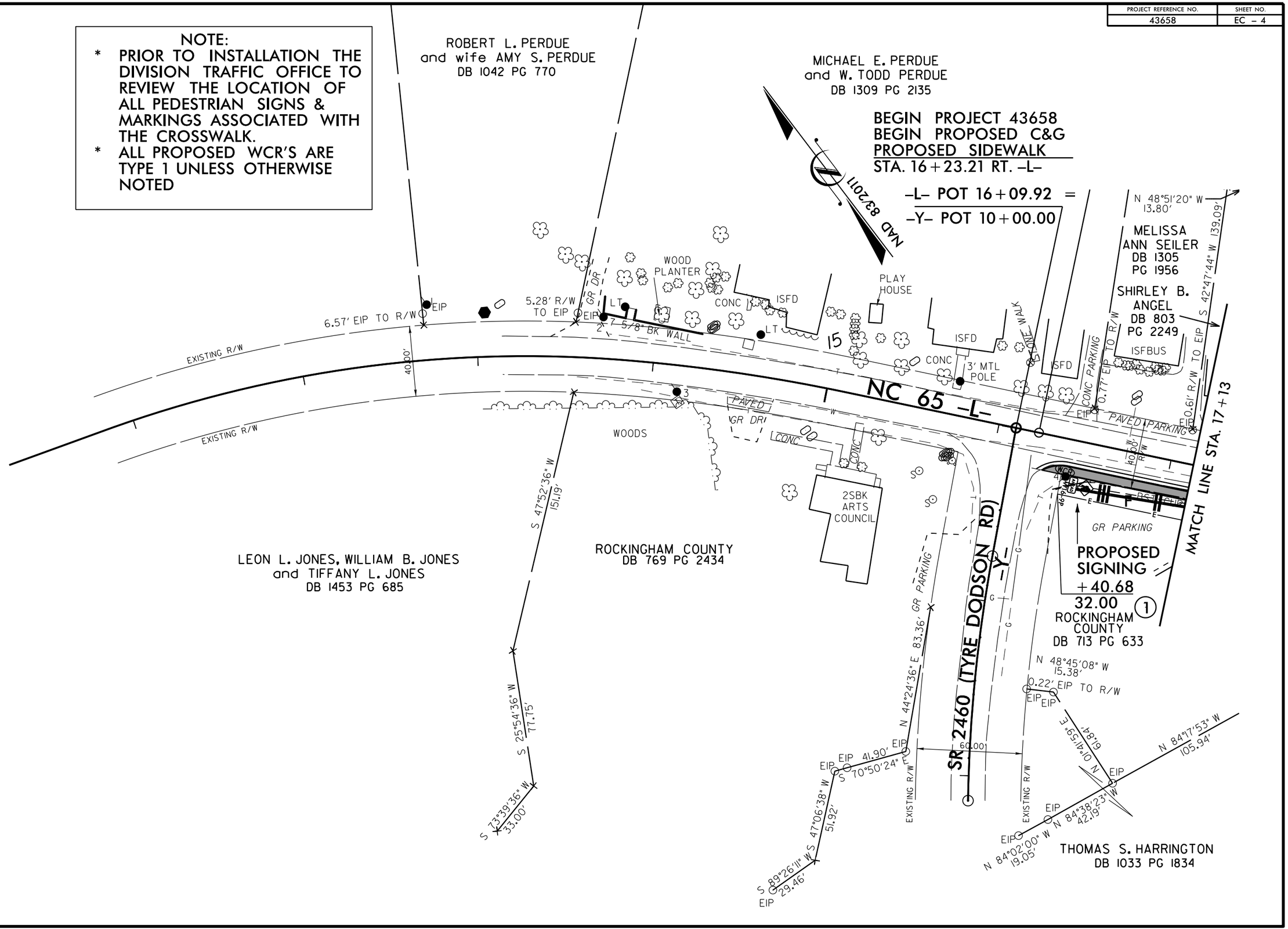

REVISIONS

8/17/99

29-OCT-2015 08:44
S:\DOC_S\Rockingham\43658 - NC65 @ Old Rock Crt house\Environmental\Opt3_Minimum Impact _to Church Property_10_5_15\43658_EC_PSH4.dgn
$$$$USERNAME$$$$

PROJECT REFERENCE NO.	SHEET NO.
43658	EC – 5

25' 0' 25' 50'
12.5'
(ENGLISH)

NAD 83/2011

STANLEY L. ALLEN
DB 1043 PG 555

ROCKINGHAM COUNTY
DB 200
PG 558

ROCKINGHAM COUNTY HISTORICAL SOCIETY, INC
DB 680 PG 701

WENTWORTH PRESBYTERIAN CHURCH
DB 1453 PG 1147
DB 819 PG 1218

WENTWORTH PRESBYTERIAN CHURCH
DB 1005 PG 355

S 35°39'34" W 380.07'
S 25°15'38" W 267.99'
N 30°58'18" E 397.21'
S 14°43'18" W 400.13'
N 14°43'17" E 410.94'
N 16°10'04" E 95.12'
S 05°51'34" W 142.28'
N 05°51'34" E 176.34'
S 05°21'34" W 301.23'
S 84°08'26" E 4.00'
S 01°26'26" E 51.20'
S 84°18'26" E 132.40'
N 05°28'52" E 40.33'
N 35°40'32" E 142.47'

+38.07
-33.00

BEGIN PROPOSED C&G & PROPOSED SIDEWALK
STA. 17+40.39 LT. -L-

+33.25
-32.95

+25.33
-33.00

PROPOSED SIGNING & SOLAR POWERED FLASHER
W11-2
W16-7pL

+32.02
-43.01

+08.50
-25.05

+59.64
-25.00

+37.21
-45.44

PROPOSED WCR, TYPE 1 FLUSH WITH ASHPALT DRWY.

END PROPOSED C&G & PROPOSED SIDEWALK
STA. 19+44.30 LT. -L-

END PROJECT 43658
STA. 19+69.31 LT. -L-

PROPOSED SIGNING

NOTE:
* PRIOR TO INSTALLATION THE DIVISION TRAFFIC OFFICE TO REVIEW THE LOCATION OF ALL PEDESTRIAN SIGNS & MARKINGS ASSOCIATED WITH THE CROSSWALK.
* ALL PROPOSED WCR'S ARE TYPE 1 UNLESS OTHERWISE NOTED

MATCH LINE STA. 17+13

3SBK OLD JAIL
7⅛" CONC WALL
ABANDONED WELL
CONC RAMP
PAVED
CONC
CONC CURB
RAMP
2SFBUS
ISFD
W/LT
GR PARKING
(EOP)
(EOT)
EIP
MH
WV VAULT
FLAG POLE
PAVED PARKING
MONUMENT
30.07' EIP TO R/W
80' F-F
BST CURB
GRAVEL PARKING
CONC. MON.
2SF POST OFFICE
STONE WK
CONC. MON
12" RCP
GR DR
12" CMP
REMOVE EX. PIPE
12" RCP, CL IV
69 LF
20
PAVED PARKING
PLANTER
F/O BOX
HITCHING POST
HISTORICAL ROCK TABLE
2SBK OLD COURT HOUSE
RR SPIKE
1-1/2SFD
2SFD
PARKING LOT
WOOD HANDICAP RAMP
15" RCP
PAVED DR
GR PARKING
15" RCP DIRECTION ONLY
EXISTING R/W
40.00' R/W
NC 65 -L-
0.77' EIP TO R/W
CONC

+38.17
32.10

+90.82
28.00

END PROPOSED C&G & PROPOSED SIDEWALK
STA. 18+91.58 RT. -L-

+90.25
28.00

PROPOSED SIGNING & SOLAR POWERED FLASHER
W11-2
W16-7pL

10' PROPOSED CROSSWALK & TYPE 2 WCR EACH SIDE

1 ROCKINGHAM COUNTY
DB 713 PG 633

IRIS SMITH POWELL
DB 474 PG 226

DANIEL K. BAILEY
DB 1096 PG 21

TRUETTE C. PARLEIR and MOZELLE PARLEIR
DB 709 PG 912

REVISIONS

8/17/99

29-OCT-2015 08:44
S:\DOC_&_R\Rockingham\43658 - NC65 @ Old Rock Crt house\Environmental\Opt3_Minimum Impact - to Church Property_10.5.15\43658_EC_PSH5.dgn
$$$$USERNAME$$$$