PROJECT: 17BP.7.R.28

STATE	STATE PROJECT REFERENCE NO.	SHEET NO.	TOTAL SHEETS
N.C.	17BP.7.R.28	1	

STATE PROJ. NO.	F.A. PROJ. NO.	DESCRIPTION

See Sheet 1-A For Index of Sheets
See Sheet 1-B For Conventional Symbols

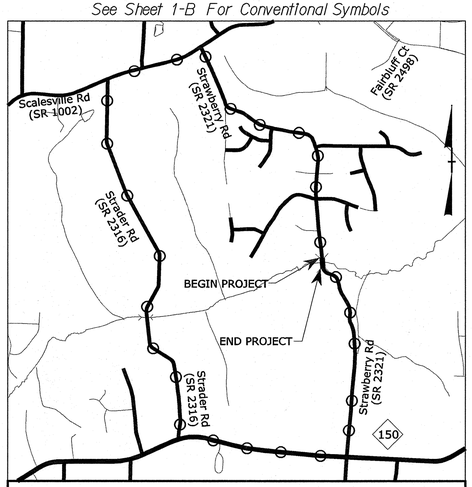

VICINITY MAP

OFF SITE DETOUR ROUTE

STATE OF NORTH CAROLINA
DIVISION OF HIGHWAYS

GUILFORD COUNTY

LOCATION: BRIDGE NO. 330 OVER MEARS FORK CREEK ON SR 2321 (STRAWBERRY ROAD)

TYPE OF WORK: GRADING, PAVING, DRAINAGE, AND STRUCTURE

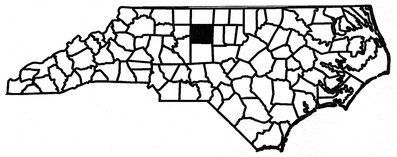

NC GRID
NAD 83/NSRS 2007

4

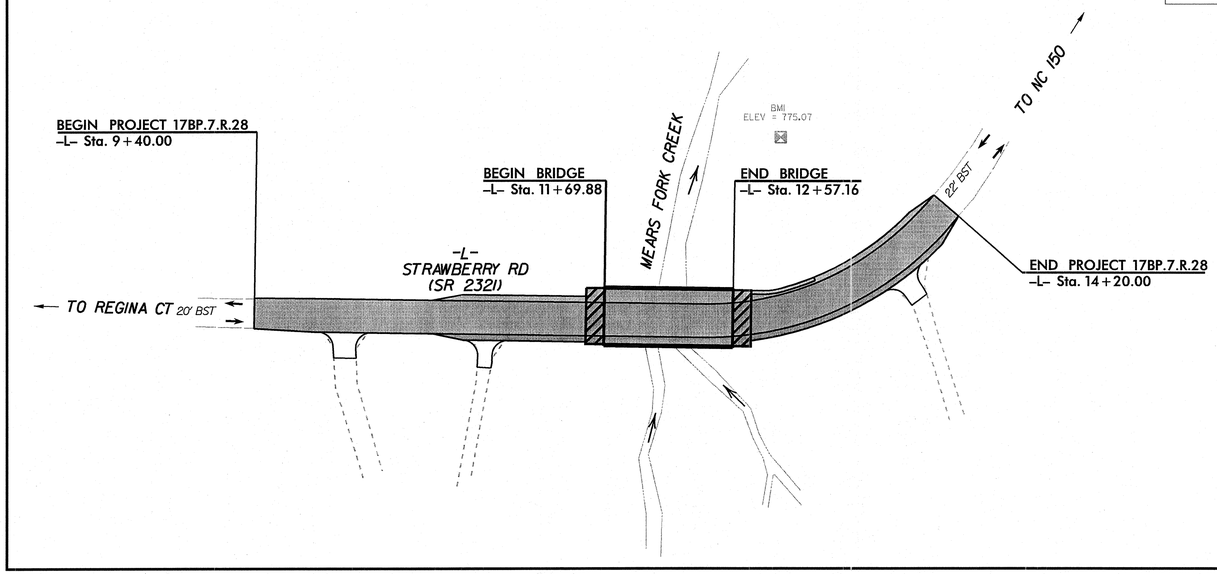

CLEARING ON THIS PROJECT SHALL BE PERFORMED TO THE LIMITS ESTABLISHED BY METHOD II
THIS PROJECT IS NOT WITHIN ANY MUNICIPAL BOUNDARIES

NCDOT CONTACT:

TIM POWERS, P.E.
DIVISION BRIDGE PROGRAM MANAGER
DIVISION 7

CONTRACT:

K:\RAL_Roadway\01\036192 - 400330\Roadway\Proj\400330_rdy_1shdgn

4/18/2014

GRAPHIC SCALES

50 25 0 50 100
PLANS

50 25 0 50 100
PROFILE (HORIZONTAL)

10 5 0 10 20
PROFILE (VERTICAL)

DESIGN DATA

ADT 2013 = 6630 VPD
ADT 2033 = 12250 VPD
DHV =
D =
T = 6%
V = 40 MPH

FUNC CLASS = LOCAL RURAL
SUB-REGIONAL TIER

PROJECT LENGTH

LENGTH ROADWAY PROJECT	=	0.074 MILES
LENGTH STRUCTURE PROJECT	=	0.017 MILES
TOTAL LENGTH OF PROJECT	=	0.091 MILES

PLANS PREPARED FOR THE NCDOT BY:

Kimley-Horn and Associates, Inc.
© 2012
Post Office Box 33068
Raleigh, North Carolina 27636
PE NO. F-0102

2012 STANDARD SPECIFICATIONS

RIGHT OF WAY DATE:

LETTING DATE:

JEFFREY W. MOORE, P.E.
PROJECT ENGINEER

ELIZABETH LYNCH, P.E.
PROJECT DESIGN ENGINEER

HYDRAULICS ENGINEER

NORTH CAROLINA PROFESSIONAL SEAL 0326 15 ENGINEER JASON D. LAWRENCE
4/21/14
SIGNATURE: P.E.

ROADWAY DESIGN ENGINEER

NORTH CAROLINA PROFESSIONAL SEAL 024436 ENGINEER JEFFREY W. MOORE
4-21-14
SIGNATURE: P.E.

STATE OF NORTH CAROLINA DEPARTMENT OF TRANSPORTATION

PROJECT REFERENCE NO.	SHEET NO.
17BP.7.R.28	1-A

Kimley-Horn and Associates, Inc.

P.O. BOX 33068
RALEIGH, N.C. 27636-3068

ROADWAY DESIGN ENGINEER

NORTH CAROLINA PROFESSIONAL SEAL 024436 4-21-14 ENGINEER JEFFREY W. MOORE

HYDRAULICS ENGINEER

REVISIONS

INDEX OF SHEETS

SHEET NUMBER	DESCRIPTION
1	TITLE SHEET
1-A	INDEX OF SHEETS, GENERAL NOTES, AND LIST OF STANDARD DRAWINGS
1-B	CONVENTIONAL SYMBOLS
2	PAVEMENT SCHEDULE AND TYPICAL SECTIONS
3	GUARDRAIL SUMMARY, DRAINAGE SUMMARY, AND SUMMARY OF EARTHWORK
4	PLAN AND PROFILE SHEET
TMP-1 THRU TMP-2	TRAFFIC CONTROL PLANS
EC-1 THRU EC-5	EROSION CONTROL PLANS
RF-1	REFORESTATION PLAN
X-1 THRU X-3	CROSS-SECTIONS
S-1 THRU S-18	STRUCTURE PLANS

GENERAL NOTES: 2012 SPECIFICATIONS

EFFECTIVE: 01-17-12
REVISED: 07-30-12

GRADE LINE:
GRADING AND SURFACING:

THE GRADE LINES SHOWN DENOTE THE FINISHED ELEVATION OF THE PROPOSED SURFACING AT GRADE POINTS SHOWN ON THE TYPICAL SECTIONS. GRADE LINES MAY BE ADJUSTED AT THEIR BEGINNING AND ENDING AND AT STRUCTURES AS DIRECTED BY THE ENGINEER IN ORDER TO SECURE A PROPER TIE-IN.

CLEARING:

CLEARING ON THIS PROJECT SHALL BE PERFORMED TO THE LIMITS ESTABLISHED BY METHOD II.

SUPERELEVATION:

ALL CURVES ON THIS PROJECT SHALL BE SUPERELEVATED IN ACCORDANCE WITH STD. NO. 225.04 USING THE RATE OF SUPERELEVATION AND RUNOFF SHOWN ON THE PLANS. SUPERELEVATION IS TO BE REVOLVED ABOUT THE GRADE POINTS SHOWN ON THE TYPICAL SECTIONS.

SHOULDER CONSTRUCTION:

ASPHALT, EARTH, AND CONCRETE SHOULDER CONSTRUCTION ON THE HIGH SIDE OF SUPERELEVATED CURVES SHALL BE IN ACCORDANCE WITH STD. NO. 560.01.

GUARDRAIL:

THE GUARDRAIL LOCATIONS SHOWN ON THE PLANS MAY BE ADJUSTED DURING CONSTRUCTION AS DIRECTED BY THE ENGINEER. THE CONTRACTOR SHOULD CONSULT WITH THE ENGINEER PRIOR TO ORDERING GUARDRAIL MATERIAL.

SUBSURFACE PLANS:

NO SUBSURFACE PLANS ARE AVAILABLE ON THIS PROJECT. THE CONTRACTOR SHOULD MAKE HIS OWN INVESTIGATION AS TO THE SUBSURFACE CONDITIONS.

UTILITIES:

UTILITY OWNERS ON THIS PROJECT ARE DUKE ENERGY AND AT&T.

ANY RELOCATION OF EXISTING UTILITIES WILL BE ACCOMPLISHED BY OTHERS.

2012 ROADWAY ENGLISH STANDARD DRAWINGS

EFFECTIVE: 01-17-12
REVISED: 07-30-12

The following Roadway Standards as appear in "Roadway Standard Drawings" Highway Design Branch – N. C. Department of Transportation – Raleigh, N. C., Dated January, 2012 are applicable to this project and by reference hereby are considered a part of these plans:

STD.NO.	TITLE
DIVISION 2 – EARTHWORK	
200.02	Method of Clearing – Method II
225.02	Guide for Grading Subgrade – Secondary and Local
225.04	Method of Obtaining Superelevation – Two Lane Pavement
DIVISION 3 – PIPE CULVERTS	
300.01	Method of Pipe Installation
DIVISION 8 – INCIDENTALS	
840.29	Frames and Narrow Slot Flat Grates
840.35	Traffic Bearing Grated Drop Inlet – for Cast Iron Double Frame and Grates
846.04	Drop Inlet Installation in Shoulder Berm Gutter
862.01	Guardrail Placement
862.02	Guardrail Installation
862.03	Structure Anchor Units
876.01	Rip Rap in Channels
876.02	Guide for Rip Rap at Pipe Outlets
876.04	Drainage Ditches with Class 'B' Rip Rap

4/18/2014 K:\RAL_Roadway\011036192 – 400330\Roadway\Proj\400330_rdy_psh_1A.dgn

PROJECT REFERENCE NO.	SHEET NO.
17BP.7.R.28	1-B

Note: Not to Scale

S.U.E. = Subsurface Utility Engineering

STATE OF NORTH CAROLINA
DIVISION OF HIGHWAYS

CONVENTIONAL PLAN SHEET SYMBOLS

BOUNDARIES AND PROPERTY:

- State Line
- County Line
- Township Line
- City Line
- Reservation Line
- Property Line
- Existing Iron Pin — EIP
- Property Corner
- Property Monument — ECM
- Parcel/Sequence Number — 123
- Existing Fence Line
- Proposed Woven Wire Fence
- Proposed Chain Link Fence
- Proposed Barbed Wire Fence
- Existing Wetland Boundary — WLB
- Proposed Wetland Boundary — WLB
- Existing Endangered Animal Boundary — EAB
- Existing Endangered Plant Boundary — EPB
- Known Soil Contamination: Area or Site
- Potential Soil Contamination: Area or Site

BUILDINGS AND OTHER CULTURE:

- Gas Pump Vent or U/G Tank Cap
- Sign — S
- Well — W
- Small Mine
- Foundation
- Area Outline
- Cemetery
- Building
- School
- Church
- Dam

HYDROLOGY:

- Stream or Body of Water
- Hydro, Pool or Reservoir
- Jurisdictional Stream — JS
- Buffer Zone 1 — BZ 1
- Buffer Zone 2 — BZ 2
- Flow Arrow
- Disappearing Stream
- Spring
- Wetland
- Proposed Lateral, Tail, Head Ditch — FLOW
- False Sump

RAILROADS:

- Standard Gauge — CSX TRANSPORTATION
- RR Signal Milepost — MILEPOST 35
- Switch — SWITCH
- RR Abandoned
- RR Dismantled

RIGHT OF WAY:

- Baseline Control Point
- Existing Right of Way Marker
- Existing Right of Way Line
- Proposed Right of Way Line — RW
- Proposed Right of Way Line with Iron Pin and Cap Marker — RW
- Proposed Right of Way Line with Concrete or Granite R/W Marker — RW
- Proposed Control of Access Line with Concrete C/A Marker — CA
- Existing Control of Access — CA
- Proposed Control of Access — CA
- Existing Easement Line — E
- Proposed Temporary Construction Easement — E
- Proposed Temporary Drainage Easement — TDE
- Proposed Permanent Drainage Easement — PDE
- Proposed Permanent Drainage / Utility Easement — DUE
- Proposed Permanent Utility Easement — PUE
- Proposed Temporary Utility Easement — TUE
- Proposed Aerial Utility Easement — AUE
- Proposed Permanent Easement with Iron Pin and Cap Marker

ROADS AND RELATED FEATURES:

- Existing Edge of Pavement
- Existing Curb
- Proposed Slope Stakes Cut — C
- Proposed Slope Stakes Fill — F
- Proposed Curb Ramp — CR
- Existing Metal Guardrail
- Proposed Guardrail
- Existing Cable Guiderail
- Proposed Cable Guiderail
- Equality Symbol
- Pavement Removal

VEGETATION:

- Single Tree
- Single Shrub
- Hedge
- Woods Line
- Orchard
- Vineyard — Vineyard

EXISTING STRUCTURES:

MAJOR:

- Bridge, Tunnel or Box Culvert — CONC
- Bridge Wing Wall, Head Wall and End Wall — CONC WW

MINOR:

- Head and End Wall — CONC HW
- Pipe Culvert
- Footbridge
- Drainage Box: Catch Basin, DI or JB — CB
- Paved Ditch Gutter
- Storm Sewer Manhole — S
- Storm Sewer — S

UTILITIES:

POWER:

- Existing Power Pole
- Proposed Power Pole
- Existing Joint Use Pole
- Proposed Joint Use Pole
- Power Manhole — P
- Power Line Tower
- Power Transformer
- U/G Power Cable Hand Hole
- H-Frame Pole
- Recorded U/G Power Line — P
- Designated U/G Power Line (S.U.E.*) — P

TELEPHONE:

- Existing Telephone Pole
- Proposed Telephone Pole
- Telephone Manhole — T
- Telephone Booth
- Telephone Pedestal — T
- Telephone Cell Tower
- U/G Telephone Cable Hand Hole — HH
- Recorded U/G Telephone Cable — T
- Designated U/G Telephone Cable (S.U.E.*) — T
- Recorded U/G Telephone Conduit — TC
- Designated U/G Telephone Conduit (S.U.E.*) — TC
- Recorded U/G Fiber Optics Cable — T FO
- Designated U/G Fiber Optics Cable (S.U.E.*) — T FO

WATER:

- Water Manhole — W
- Water Meter
- Water Valve
- Water Hydrant
- Recorded U/G Water Line
- Designated U/G Water Line (S.U.E.*)
- Above Ground Water Line — A/G Water

TV:

- TV Satellite Dish
- TV Pedestal — C
- TV Tower
- U/G TV Cable Hand Hole — HH
- Recorded U/G TV Cable — TV
- Designated U/G TV Cable (S.U.E.*) — TV
- Recorded U/G Fiber Optic Cable — TV FO
- Designated U/G Fiber Optic Cable (S.U.E.*) — TV FO

GAS:

- Gas Valve
- Gas Meter
- Recorded U/G Gas Line — G
- Designated U/G Gas Line (S.U.E.*) — G
- Above Ground Gas Line — A/G Gas

SANITARY SEWER:

- Sanitary Sewer Manhole
- Sanitary Sewer Cleanout
- U/G Sanitary Sewer Line — SS
- Above Ground Sanitary Sewer — A/G Sanitary Sewer
- Recorded SS Forced Main Line — FSS
- Designated SS Forced Main Line (S.U.E.*) — FSS

MISCELLANEOUS:

- Utility Pole
- Utility Pole with Base
- Utility Located Object
- Utility Traffic Signal Box — S
- Utility Unknown U/G Line — ?UTL
- U/G Tank; Water, Gas, Oil
- Underground Storage Tank, Approx. Loc. — UST
- A/G Tank; Water, Gas, Oil
- Geoenvironmental Boring
- U/G Test Hole (S.U.E.*)
- Abandoned According to Utility Records — AATUR
- End of Information — E.O.I.

PROJECT REFERENCE NO.	SHEET NO.
17BP.7.R.28	2

Kimley-Horn and Associates, Inc.
P.O. BOX 33068
RALEIGH, N.C. 27636-3068

ROADWAY DESIGN ENGINEER

NORTH CAROLINA PROFESSIONAL SEAL 024436 ENGINEER JEFFREY W. MOORE 4-21-14

HYDRAULICS ENGINEER

REVISIONS

-L- SR 2321 (STRAWBERRY RD)

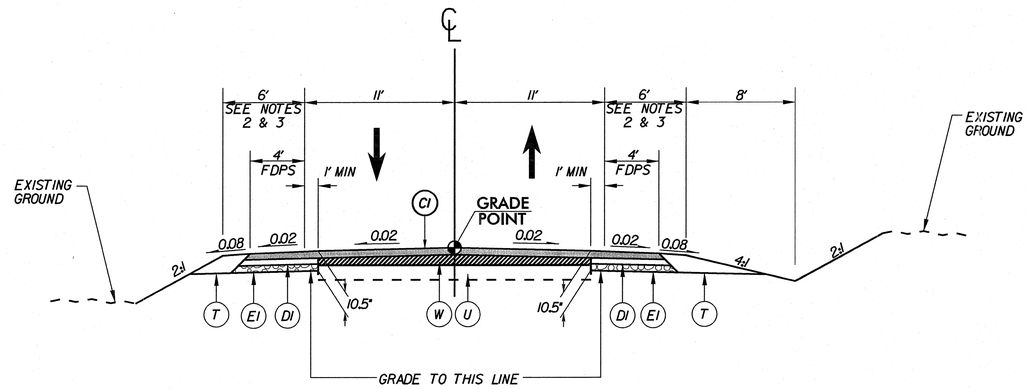

TYPICAL SECTION NO. 1

-L- STA 9+40.00 TO STA 11+69.88 (BEGIN BRIDGE)
-L- STA 12+57.16 (END BRIDGE) TO STA 14+20.00

NOTES
1. MILL NOTCH TO KEY-IN S9.5B FROM
   -L- STA 9+40.00 TO STA 9+90.00
   AND -L- STA 13+60.00 TO STA 14+10.00
2. WIDEN SHOULDER WIDTH BY 3' AT GUARDRAIL LOCATIONS
3. USE 4' SHOULDER FROM -L- STA 9+40 TO 10+20 LT/RT
4. PAVEMENT EDGE SLOPES ARE 1:1 UNLESS OTHERWISE INDICATED

-L- SR 2321 (STRAWBERRY RD)

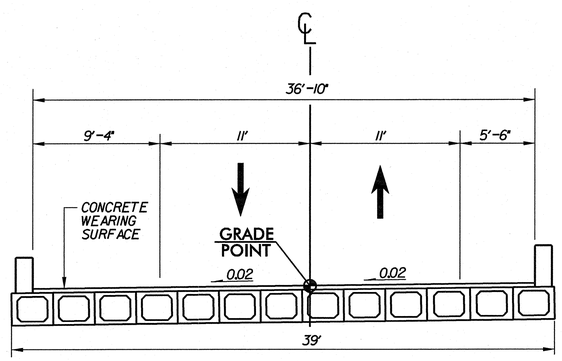

BRIDGE TYPICAL SECTION NO. 1

-L- STA 11+69.88 TO STA 12+57.16

PAVEMENT SCHEDULE

C1	PROP. APPROX. 2" ASPHALT CONCRETE SURFACE COURSE TYPE S9.5B, AT AN AVERAGE RATE OF 224 LBS. PER SQ. YD.
C2	PROP. VAR. DEPTH ASPHALT CONCRETE SURFACE COURSE, TYPE S9.5B, AT AN AVERAGE RATE OF 112 LBS. PER SQ. YD. PER 1" DEPTH. TO BE PLACED IN LAYERS NOT TO EXCEED 2" IN DEPTH.
D1	PROP. APPROX. 3" ASPHALT CONCRETE INTERMEDIATE COURSE TYPE I19.0B, AT AN AVERAGE RATE OF 342 LBS. PER SQ. YD. IN EACH OF TWO LAYERS.
D2	PROP. VAR. DEPTH ASPHALT CONCRETE INTERMEDIATE COURSE, TYPE I19.0B, AT AN AVERAGE RATE OF 114 LBS. PER SQ. YD. PER 1" DEPTH. TO BE PLACED IN LAYERS NOT LESS THAN 2.5" IN DEPTH OR GREATER THAN 4" IN DEPTH.
E1	PROP. APPROX. 5.5" ASPHALT CONCRETE BASE COURSE TYPE B25.0B, AT AN AVERAGE RATE OF 627 LBS. PER SQ. YD.
E2	PROP. VAR. DEPTH ASPHALT CONCRETE BASE COURSE, TYPE B25.0B, AT AN AVERAGE RATE OF 114 LBS. PER SQ. YD. PER 1" DEPTH TO BE PLACED IN LAYERS NOT LESS THAN 3" OR GREATER THAN 5.5" DEPTH
T	EARTH MATERIAL
U	EXISTING PAVEMENT
W	VARIABLE DEPTH ASPHALT PAVEMENT (SEE DETAIL W)

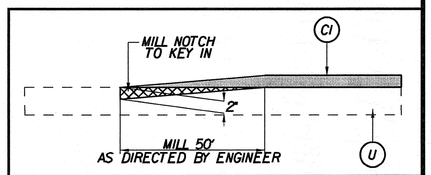

MILLING DETAIL

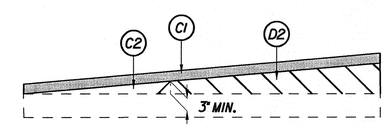

DETAIL W SHOWING METHOD OF WEDGING

K:\RAL_Roadway\011036192 - 400330\Roadway\Proj\400330_rdy_typ.dgn

4/21/2014

COMPUTED BY: MTH	DATE: 02-28-2013
CHECKED BY: JWM	DATE: 02-28-2013

PROJECT REFERENCE NO.	SHEET NO.
17BP.7.R.28	3

DIVISION OF HIGHWAYS
STATE OF NORTH CAROLINA

NORTH CAROLINA PROFESSIONAL SEAL 024436 ENGINEER JEFFREY W. MOORE 4-21-14

GUARDRAIL SUMMARY

G = GATING IMPACT ATTENUATOR TYPE 350
NG = NON-GATING IMPACT ATTENUATOR TYPE 350

SURVEY LINE	BEG. STA.	END STA.	LOCATION	LENGTH STRAIGHT	LENGTH SHOP CURVED	LENGTH DOUBLE FACED	WARRANT POINT APPROACH END	WARRANT POINT TRAILING END	ANCHORS GRAU 350	ANCHORS TYPE III	ANCHORS CAT-1	ANCHORS AT-1	IMPACT ATTENUATOR TYPE 350 EA	G	NG				REMARKS
-L-	10+89.75	11+71.00	LT	81.25			11+71.00		1	1		1							
-L-	11+08.50	11+71.00	RT	50.00	12.50			11+71.00		1									
-L-	12+56.03	13+74.78	LT	118.75				12+56.03	1	1									
-L-	12+56.03	13+27.28	RT	81.25			12+56.03		1	1									
		SUBTOTAL		331.25	12.50														
		LESS ANCHOR DEDUCTIONS																	
		GRAU 350 3 @ 50.00' =		150.00															
		AT-1 1 @ 6.25' =		6.25															
		TYPE III 4 @ 18.75' =		75.00															
			TOTAL	100	12.50														
			SAY	100	12.5														

ADDITIONAL GUARDRAIL POSTS = 5 EA

SUB-REGIONAL & REGIONAL LIST OF PIPE, ENDWALLS, ETC. (FOR PIPES 48" & UNDER)

STATION / SIZE / THICKNESS OR GAUGE	LOCATION (LT, RT, OR CL)	STRUCTURE NO. FROM	STRUCTURE NO. TO	TOP ELEVATION	INVERT ELEVATION	INVERT ELEVATION	SLOPE CRITICAL	DRAINAGE PIPE (RCP, CSP, CAAP, HDPE, or PVC) 12"	15"	18"	24"	30"	36"	42"	48"	DO NOT USE RCP	DO NOT USE CSP	DO NOT USE CAAP	DO NOT USE HDPE
10+00 -L-	RT	406			778.5	777.9													
11+00 -L-	RT	403			776.3	774.8													
12+90.63 -L-	LT	405		779.8	777.0														
13+00 -L-	LT	405	402		777.0	776.0													
13+11.74 -L-	LT	402		779.7	776.0														
13+11.74 -L-	LT	402	401		776.0	775.0			20										
13+75 -L-	RT	404			777.7	776.4													
SHEET TOTALS									20										

STATION	C.S. PIPE 12" (.064)	15" (.064)	18" (.064)	24" (.064)	30" (.079)	36" (.079)	42" (.109)	48" (.109)	R.C. PIPE CLASS III 12"	15"	18"	24"	30"	36"	42"	48"	R.C. PIPE CLASS IV 12"	15"	18"	24"	30"	36"	42"	48"
10+00 -L-																				28				
11+00 -L-																				48				
12+90.63 -L-																								
13+00 -L-																		16						
13+11.74 -L-																								
13+11.74 -L-																								
13+75 -L-																		28						
SHEET TOTALS																		44		76				

STATION	** " R.C. PIPE (CLASS V)	***" RC PIPE CULVERTS, CONTRACTOR DESIGN	***" RC PIPE CULVERTS, CONTRACTOR DESIGN	15" SIDE DRAIN PIPE	18" SIDE DRAIN PIPE	ENDWALLS STD. 838.01 OR STD. 838.11 (UNLESS NOTED OTHERWISE) CU. YARDS R.C.P.	C.S.P.	QUANTITIES FOR DRAINAGE STRUCTURES PER EACH (0' THRU 5.0')	"TOTAL L.F. FOR PAY QUANTITY SHALL BE COL. 'A' + (1.3 X COL 'B')" LIN. FT. A 5.0' THRU 10.0'	B 10.0' AND ABOVE	C.B. STD. 840.01 OR STD. 840.02	FRAME, GRATES, AND HOOD STANDARD 840.03 TYPE OF GRATE E	F	G	CONCRETE TRANSITIONAL SECTION DROP INLET	CATCH BASIN	D.I. STD. 840.14 OR STD. 840.15	D.I. FRAME AND GRATE STD. 840.16	G.D.I. TYPE "A" STD. 840.17 OR 840.26	G.D.I. TYPE "B" STD. 840.18 OR 840.27	G.D.I. TYPE "D" STD. 840.19 OR 840.28	G.D.I. FRAME WITH GRATE STD. 840.20	G.D.I. FRAME WITH TWO GRATES STD. 840.22	G.D.I. (N.S.) FRAME WITH TWO GRATES STD. 840.29	G.D.I. (N.S.) FRAME WITH TWO GRATES STD. 840.24	J.B. STD. 840.31 OR 840.32	TRAFFIC BEARING G.D.I. STD. 840.35	STEEL GRATE AND FRAME STD. 840.37	TRAFFIC BEARING J.B. STD. 840.34	PARALLEL PIPE END SECTION STD. 310.02	DRAINAGE PIPE ELBOWS NO. & SIZE	CONC. & BRICK PIPE PLUG, C.Y. STD. 840.71	CONC. COLLARS CL. "B" C.Y. STD. 840.72	PIPE REMOVAL LIN. FT.	REMARKS
10+00 -L-																																		22	REMOVE EXIST 18" RCP
11+00 -L-																																		25	REMOVE EXIST 18" RCP
12+90.63 -L-								1																1			1								
13+00 -L-																																			
13+11.74 -L-								1																1			1								
13+11.74 -L-																																			
13+75 -L-																																		25	REMOVE EXIST 15" RCP
SHEET TOTALS								2																2			2							72	

ABBREVIATIONS

C.B.	CATCH BASIN
N.D.I.	NARROW DROP INLET
D.I.	DROP INLET
G.D.I.	GRATED DROP INLET
G.D.I.(N.S.)	(NARROW SLOT)
J.B.	JUNCTION BOX
M.H.	MANHOLE
T.B.D.I.	TRAFFIC BEARING DROP INLET
T.B.J.B.	TRAFFIC BEARING JUNCTION BOX

SUMMARY OF EARTHWORK
IN CUBIC YARDS

LOCATION	UNCLASSIFIED EXCAVATION	UNDERCUT	EMBT+%	BORROW	WASTE
-L- STA 9+40.00 TO STA 11+69.88	97		271	174	
-L- STA 12+57.16 TO STA 14+20.00	27		178	151	
TOTALS	124		449	325	
WASTE TO REPLACE BORROW					
PROJECT TOTALS	124		449	325	0
REPLACE TOPSOIL ON BORROW (5%)				16	
GRAND TOTALS	124		449	341	0
SAY	125				

NOTE: "QUANTITIES ARE APPROXIMATE ONLY. THE RESIDENT ENGINEER WILL RE-CROSS-SECTION THE WORK ACCURATELY WHEN THE PROJECT IS STAKED OUT. THESE CROSS-SECTION NOTES WILL BE USED IN COMPUTING THE FINAL QUANTITIES FOR WHICH THE CONTRACTOR WILL BE PAID."

NOTE: EARTHWORK QUANTITIES ARE CALCULATED BY THE ROADWAY DESIGN UNIT. THESE QUANTITIES ARE BASED IN PART ON SUBSURFACE DATA PROVIDED BY THE GEOTECHNICAL ENGINEERING UNIT.

PROJECT REFERENCE NO.	SHEET NO.
17BP.7.R.28	4
R/W SHEET NO.	

Kimley-Horn and Associates, Inc.
P.O. BOX 33068
RALEIGH, N.C. 27636-3068

RIGHT-OF-WAY REV.
CONST. REV.

ROADWAY DESIGN ENGINEER — NORTH CAROLINA PROFESSIONAL SEAL 024436 ENGINEER JEFFREY W. MOORE 4-21-14

HYDRAULICS ENGINEER — NORTH CAROLINA PROFESSIONAL SEAL 032615 ENGINEER JASON D. LANKFORD 4/21/14

REVISIONS

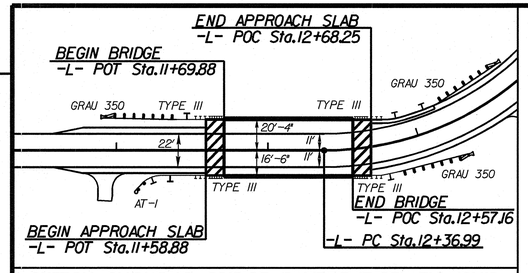

SKETCH SHOWING BRIDGE /PAVEMENT RELATIONSHIP

DETAIL 1
PREFORMED SCOUR HOLE

*NOT TO SCALE

PLAN VIEW

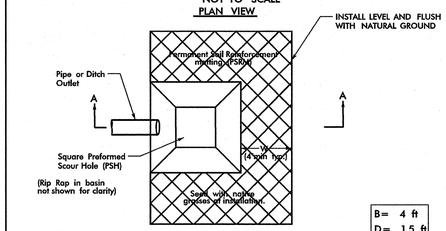

SECTION A-A

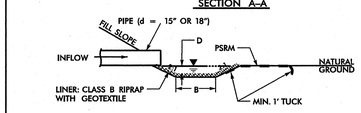

3/08

STA. 12+80 -L- (RT)
STA. 13+11 -L- (LT)

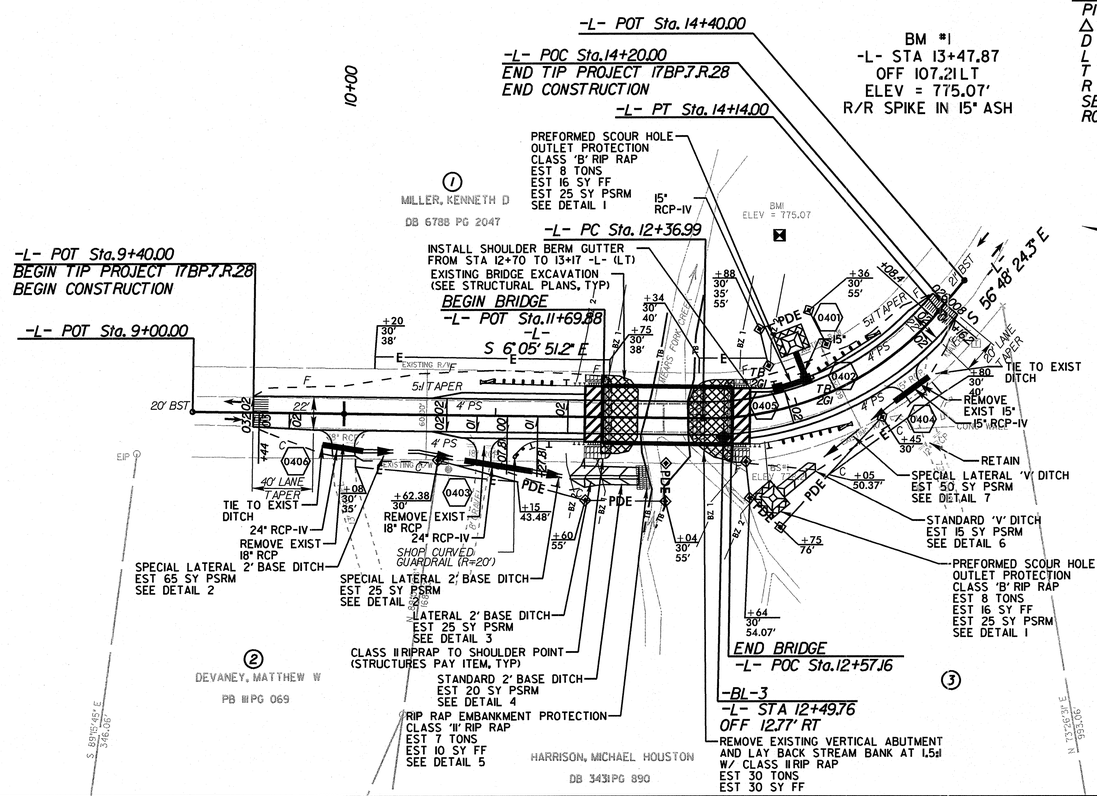

-L-
PI Sta 13+31.76
Δ = 50° 42' 33.1" (LT)
D = 28° 38' 52.4"
L = 177.01'
T = 94.77'
R = 200.00'
SE = SEE PLANS
RO = SEE PLANS

NC GRID
NAD 83/NSRS 2007

DETAIL 2
SPECIAL LATERAL BASE DITCH
(Not to Scale)

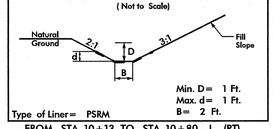

Min. D = 1 Ft.
Max. d = 1 Ft.
B = 2 Ft.

Type of Liner = PSRM

FROM STA. 10+13 TO STA. 10+80 -L- (RT)
FROM STA. 11+25 TO STA. 11+50 -L- (RT)

DETAIL 3
LATERAL BASE DITCH
(Not to Scale)

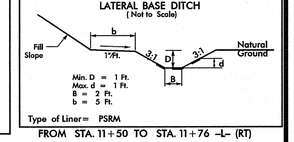

Min. D = 1 Ft.
Max. d = 1 Ft.
B = 2 Ft.
b = 3 Ft.

Type of Liner = PSRM

FROM STA. 11+50 TO STA. 11+76 -L- (RT)

DETAIL 4
STANDARD BASE DITCH
(Not to Scale)

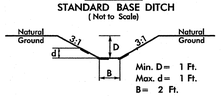

Min. D = 1 Ft.
Max. d = 1 Ft.
B = 2 Ft.

Type of Liner = PSRM

FROM STA. 11+76 TO STA. 11+95 -L- (RT)

DETAIL 5
RIP RAP AT EMBANKMENT
(Not to Scale)

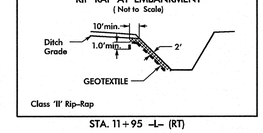

Class 'II' Rip-Rap

STA. 11+95 -L- (RT)

DETAIL 6
STANDARD 'V' DITCH
(Not to Scale)

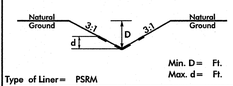

Min. D = Ft.
Max. d = Ft.

Type of Liner = PSRM

FROM STA. 12+80 TO STA. 13+00 -L- (RT)

DETAIL 7
SPECIAL LATERAL 'V' DITCH
(Not to Scale)

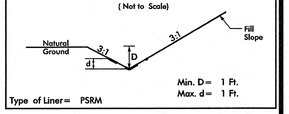

Min. D = 1 Ft.
Max. d = 1 Ft.

Type of Liner = PSRM

FROM STA. 13+00 TO STA. 13+55 -L- (RT)

BRIDGE HYDRAULIC DATA

DESIGN DISCHARGE	= 1600 CFS
DESIGN FREQUENCY	= 25 YR
DESIGN HW ELEVATION	= 777.1 FT
BASE DISCHARGE	= 2100 CFS
BASE FREQUENCY	= 100 YR
BASE HW ELEVATION	= 777.50 FT
OVERTOPPING DISCHARGE	= 4200 CFS
OVERTOPPING FREQUENCY	= >500 YR
OVERTOPPING ELEVATION	= 780.26 FT
DATE OF SURVEY	= 01/31/12
W.S.ELEVATION AT DATE OF SURVEY	= 770.0 FT

BM #1
-L- STA 13+47.87 (107.21' LT)
ELEV 775.07'
R/R SPIKE IN 15" ASH

DATUM DESCRIPTION

THE LOCALIZED COORDINATE SYSTEM DEVELOPED FOR THIS PROJECT IS BASED ON THE STATE PLANE COORDINATES ESTABLISHED BY NCDOT FOR MONUMENT "400330-2"
WITH NAD 83/NSRS 2007 STATE PLANE GRID COORDINATES OF
NORTHING: 896749.8040(ft) EASTING: 1745070.0030(ft)
ELEVATION: 810.8170(ft)
THE AVERAGE COMBINED GRID FACTOR USED ON THIS PROJECT (GROUND TO GRID) IS: 0.999978910
THE N.C. LAMBERT GRID BEARING AND LOCALIZED HORIZONTAL GROUND DISTANCE FROM "400330-2" TO -L- STATION 10+00.00 IS
S 6° 50' 45" E 556.13'
ALL LINEAR DIMENSIONS ARE LOCALIZED HORIZONTAL DISTANCES
VERTICAL DATUM USED IS NAVD 88

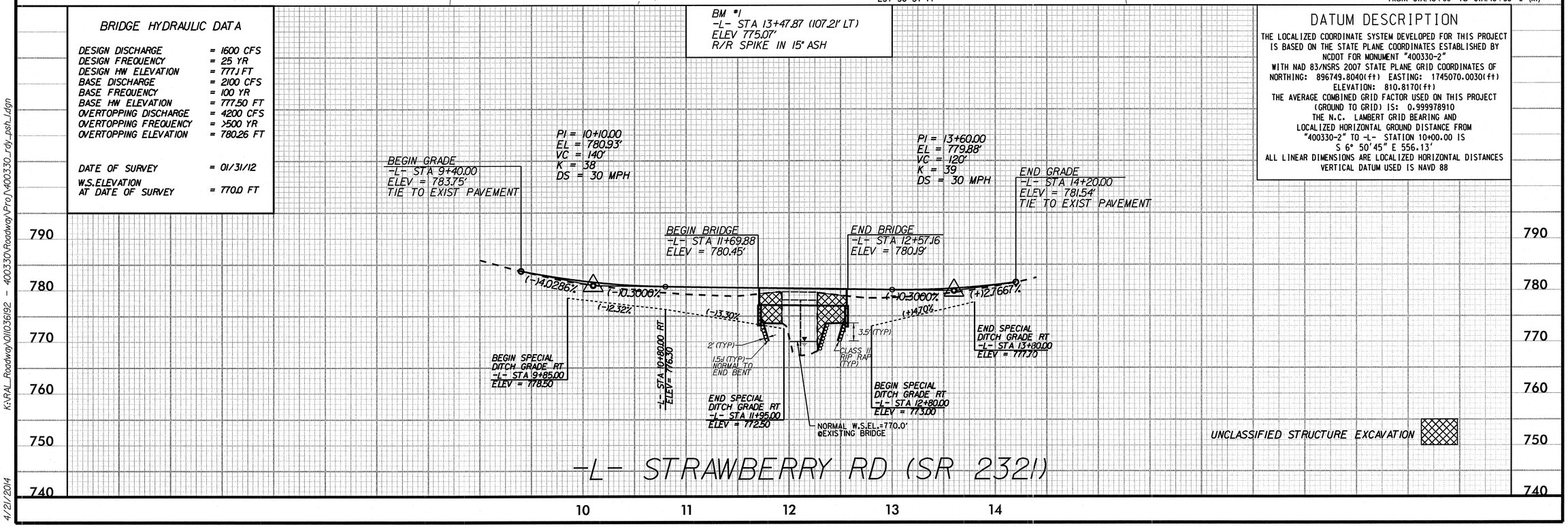

K:\RAL_Roadway\01\036192 - 400330\Roadway\Proj\400330_rdy_psh_1.dgn

4/21/2014

PROJ. REFERENCE NO.	SHEET NO.
17BP.7.R.28	TMP-1

ROADWAY STANDARD DRAWINGS

THE FOLLOWING ROADWAY STANDARDS AS SHOWN IN "ROADWAY STANDARD DRAWINGS" - PROJECT SERVICES UNIT - N.C. DEPARTMENT OF TRANSPORTATION - RALEIGH, N.C., DATED JANAUARY 2012 ARE APPLICABLE TO THIS PROJECT AND BY REFERENCE HEREBY ARE CONSIDERED A PART OF THESE PLANS:

STD. NO.	TITLE
1101.03	TEMPORARY ROAD CLOSURES
1110.01	STATIONARY WORK ZONE SIGNS
1145.01	BARRICADES

MANAGEMENT STRATEGIES

CONSTRUCTION SUMMARY:
PROPOSED BRIDGE REPLACEMENT WILL BE CONSTRUCTED AWAY FROM TRAFFIC USING A ROAD CLOSURE AND DETOUR ROUTE.

GENERAL NOTES

CHANGES MAY BE REQUIRED WHEN PHYSICAL DIMENSIONS IN THE DETAIL DRAWINGS, STANDARD DETAILS AND ROADWAY DETAILS ARE NOT ATTAINABLE TO MEET FIELD CONDITIONS, OR RESULT IN DUPLICATE, OR UNDESIRED OVERLAPPING OF DEVICES. MODIFICATION MAY INCLUDE: MOVING, SUPPLEMENTING, COVERING OR REMOVAL OF DEVICES, AS DIRECTED BY THE ENGINEER.

THE FOLLOWING GENERAL NOTES APPLY AT ALL TIMES FOR THE DURATION OF THE CONSTRUCTION PROJECT, EXCEPT WHEN OTHERWISE NOTED IN THE PLAN, OR DIRECTED BY THE ENGINEER.

TRAFFIC PATTERN ALTERATIONS

A) NOTIFY THE ENGINEER TWENTY ONE (21) CALENDAR DAYS PRIOR TO ANY TRAFFIC PATTERN ALTERATION.

SIGNING

B) INSTALL ADVANCE WORK ZONE WARNING SIGNS WHEN WORK IS WITHIN 40 FT FROM THE EDGE OF TRAVEL LANE AND NO MORE THAN THREE (3) DAYS PRIOR TO THE BEGINNING OF CONSTRUCTION.

C) PROVIDE PERMANENT SIGNING AND DEVICES REQUIRED TO CLOSE THE ROAD ACCORDING TO THE ROADWAY STANDARD DRAWINGS AND TRAFFIC CONTROL PLANS.

D) PROVIDE SIGNING REQUIRED FOR THE OFF-SITE DETOUR ROUTES AS SHOWN IN THE TRAFFIC CONTROL PLANS.

E) COVER OR REMOVE ALL SIGNS REQUIRED FOR THE OFF-SITE DETOUR WHEN THE DETOUR IS NOT IN OPERATION.

F) ENSURE ALL NECESSARY SIGNING IS IN PLACE PRIOR TO ALTERING ANY TRAFFIC PATTERN.

TRAFFIC CONTROL DEVICES

G) PLACE TYPE III BARRICADES, WITH "ROAD CLOSED" SIGN R11-2 ATTACHED, OF SUFFICIENT LENGTH TO CLOSE ENTIRE ROADWAY.

PAVEMENT MARKINGS AND MARKERS

H) TIE PROPOSED PAVEMENT MARKING LINES TO EXISTING PAVEMENT MARKING LINES.

PHASING

STEP 1: USING ROADWAY STANDARD DRAWING NUMBER 1101.03, SHEET 1 OF 9, AND SHEET TMP-2, PERFORM THE FOLLOWING:

- INSTALL ALL ROAD CLOSURE AND DETOUR SIGNING, INCLUDING BARRICADES
- IMPLEMENT A TEMPORARY CLOSURE OF SR 2321 (STRAWBERRY RD) USING A DETOUR ALONG SR 1002 (SCALESVILLE RD), SR 2316 (STRADER RD), AND NC 150. ALLOW LOCAL TRAFFIC ACCESS ALONG SR 2321 TO APPROXIMATELY 0.02 MILES NORTH AND 0.04 MILES SOUTH OF BRIDGE #330 (JUST AFTER THE FINAL DRIVEWAYS PRIOR TO THE BRIDGE.)

STEP 2: REMOVE EXISTING BRIDGE #330 AND CONSTRUCT THE PROPOSED BRIDGE AND APPROACHES AS SHOWN IN THE CONSTRUCTION PLANS.

STEP 3: INSTALL ALL FINAL PAVEMENT MARKINGS.

STEP 4: REMOVE ALL TRAFFIC CONTROL SIGNING AND DEVICES AND RE-OPEN SR 2321 (STRAWBERRY RD) TO THE FINAL TRAFFIC PATTERN.

Kimley-Horn and Associates, Inc.

APPROVED:_____ DATE:_____

SEAL

NORTH CAROLINA PROFESSIONAL SEAL 024436 ENGINEER JEFFREY W. MOORE 4-21-14

DIVISION OF HIGHWAYS STATE OF NORTH CAROLINA DEPARTMENT OF TRANSPORTATION WORK ZONE TRAFFIC CONTROL

K:\RAL_Roadway\0\I036\92 - 400330\Traffic\Traffic Control\TCP\TMP01.dgn

4/21/2014

PROJ. REFERENCE NO.	SHEET NO.
17BP.7.R.28	TMP-2

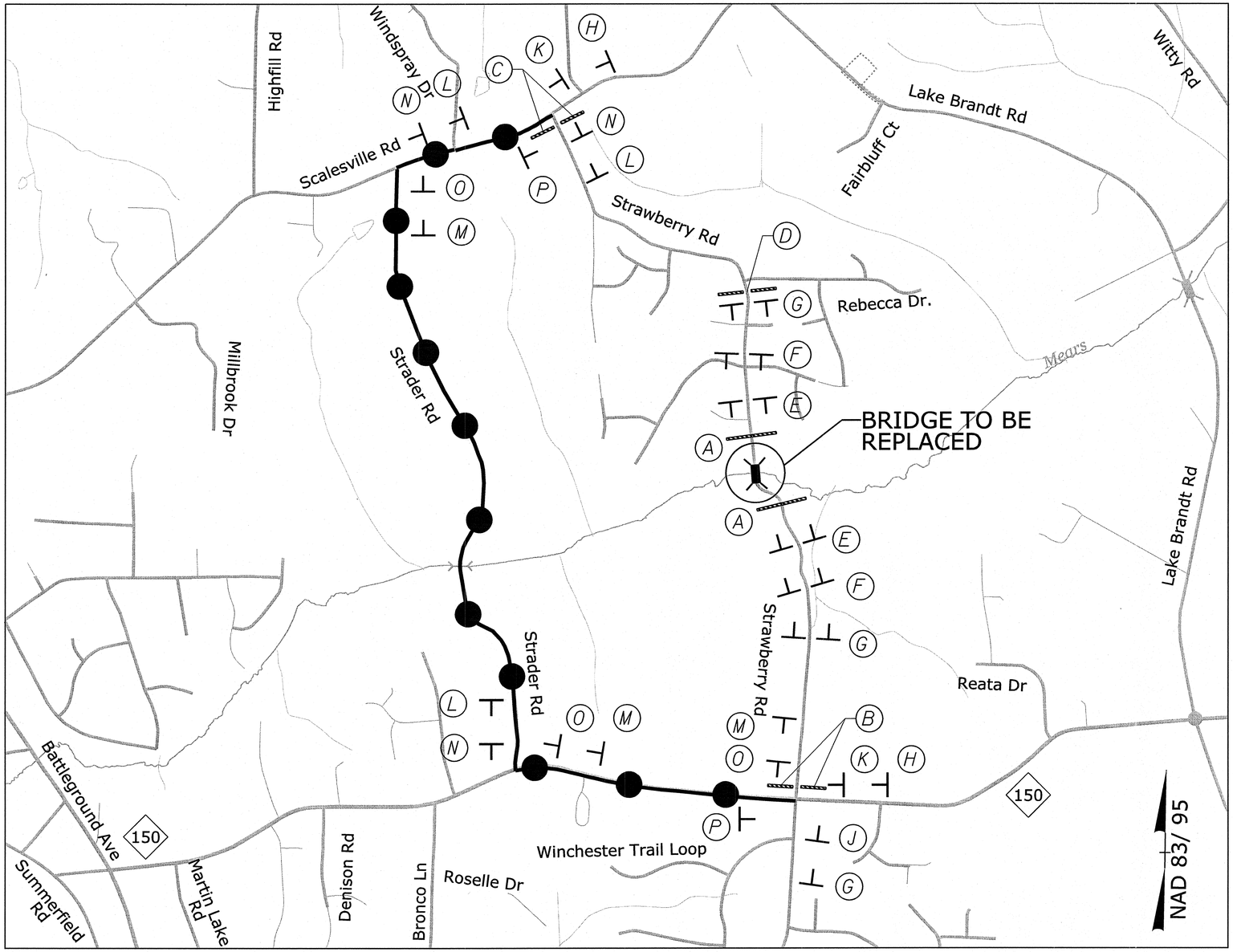

SCALE: 1" = 800'

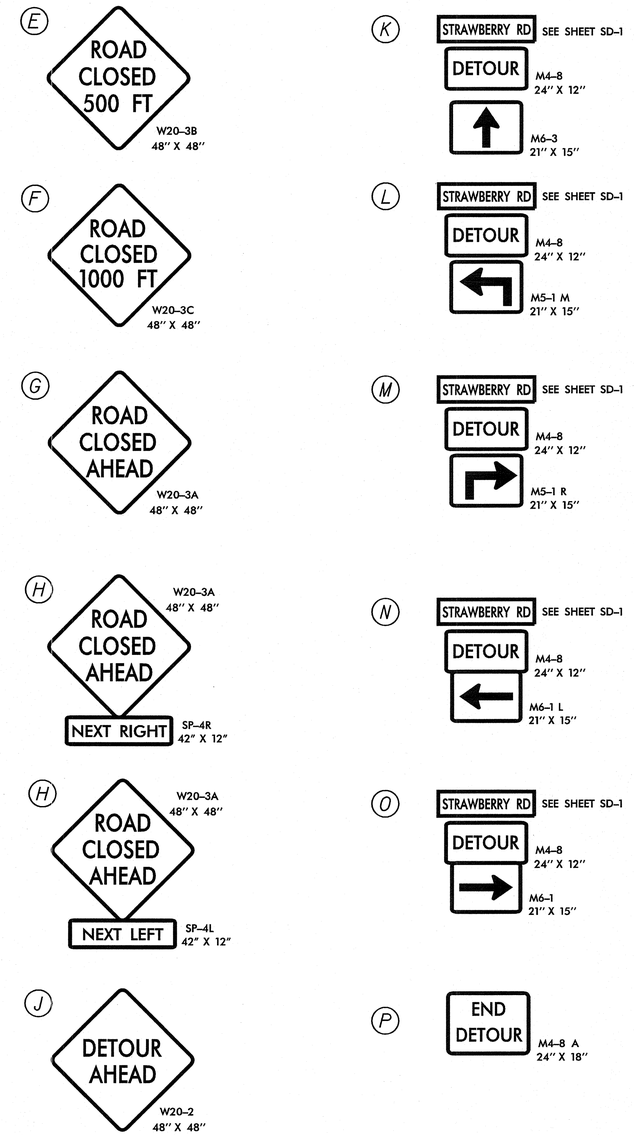

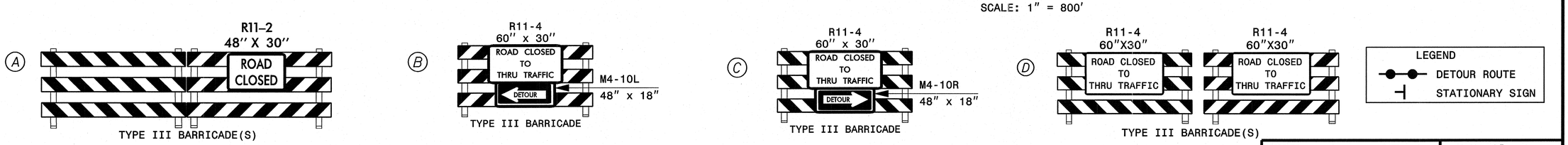

APPROVED:_____ DATE:_____

SEAL

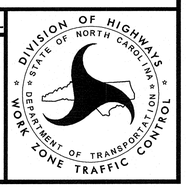

Kimley-Horn and Associates, Inc.

K:\RAL_Roadway\011036192 - 400330\Traffic\TrafficControl\TCP\TMP02.dgn

4/21/2014

STATE	STATE PROJECT REFERENCE NO.	SHEET NO.	TOTAL SHEETS
N.C.	17BP.7.R.28	EC-1	

STATE PROJ. NO.	F. A. PROJ. NO.	DESCRIPTION

PROJECT: 17BP.7.R.28

90% PLANS

STATE OF NORTH CAROLINA
DIVISION OF HIGHWAYS

PLAN FOR PROPOSED
HIGHWAY EROSION CONTROL

GUILFORD COUNTY

LOCATION: BRIDGE NO. 330 OVER MEARS FORK CREEK ON SR 2321 (STRAWBERRY ROAD)

TYPE OF WORK: GRADING, PAVING, DRAINAGE, AND STRUCTURE

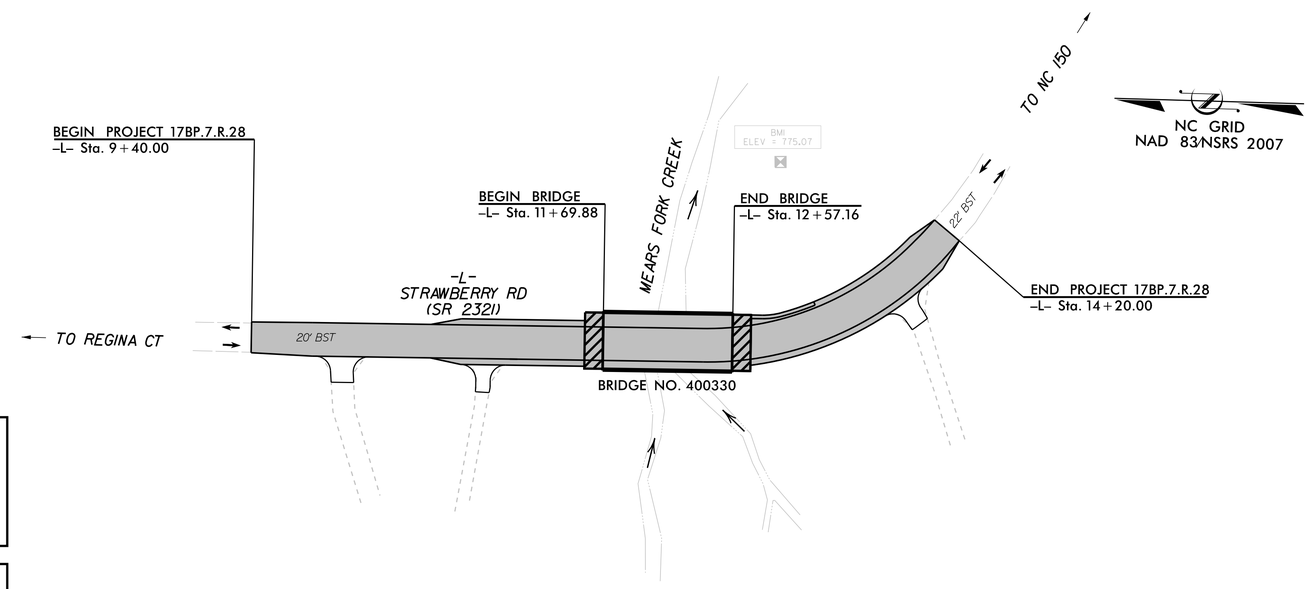

EROSION AND SEDIMENT CONTROL MEASURES

Std. #	Description	Symbol
1630.03	Temporary Silt Ditch	TSD
1630.05	Temporary Diversion	TD
1605.01	Temporary Silt Fence	
1606.01	Special Sediment Control Fence	
1622.01	Temporary Berms and Slope Drains	
1630.02	Silt Basin Type B	
1633.01	Temporary Rock Silt Check Type-A	
	Temporary Rock Silt Check Type-A with Matting and Polyacrylamide (PAM)	
1633.02	Temporary Rock Silt Check Type-B	
	Wattle / Coir Fiber Wattle	
	Wattle / Coir Fiber Wattle with Polyacrylamide (PAM)	
1634.01	Temporary Rock Sediment Dam Type-A	
1634.02	Temporary Rock Sediment Dam Type-B	
1635.01	Rock Pipe Inlet Sediment Trap Type-A	
1635.02	Rock Pipe Inlet Sediment Trap Type-B	
1630.04	Stilling Basin	
1630.06	Special Stilling Basin	
	Rock Inlet Sediment Trap:	
1632.01	Type A	A
1632.02	Type B	B
1632.03	Type C	C
	Skimmer Basin	
	Tiered Skimmer Basin	
	Infiltration Basin	

THIS PROJECT CONTAINS EROSION CONTROL PLANS FOR CLEARING AND GRUBBING PHASE OF CONSTRUCTION.

THIS PROJECT HAS BEEN DESIGNED TO SENSITIVE WATERSHED STANDARDS.

ENVIRONMENTALLY SENSITIVE AREA(S) EXIST ON THIS PROJECT

Refer To E. C. Special Provisions for Special Considerations.

ROADSIDE ENVIRONMENTAL UNIT
DEPARTMENT OF TRANSPORTATION
DIVISION OF HIGHWAYS
RALEIGH, N.C.

2012 STANDARD SPECIFICATIONS

Catherine A. Murrell
LEVEL IIIA NAME

706
LEVEL IIIA CERTIFICATION NO.

CONTRACT:

GRAPHIC SCALE

25 0 50
PLANS

25 0 50
PROFILE (HORIZONTAL)

5 0 10
PROFILE (VERTICAL)

ROADSIDE ENVIRONMENTAL UNIT
DIVISION OF HIGHWAYS
STATE OF NORTH CAROLINA

THESE EROSION AND SEDIMENT CONTROL PLANS COMPLY WITH THE REGULATIONS SET FORTH BY THE NCG-010000 GENERAL CONSTRUCTION PERMIT EFFECTIVE AUGUST 3, 2011 ISSUED BY THE NORTH CAROLINA DEPARTMENT OF ENVIRONMENT AND NATURAL RESOURCES DIVISION OF WATER QUALITY.

PLANS PREPARED FOR THE NCDOT BY:

Kimley-Horn and Associates,
© , 2013
Post Office Box 33068
Raleigh, North Carolina 27636
PE NO. F-0102

2012 STANDARD SPECIFICATIONS

Roadway Standard Drawings

The following roadway english standards as appear in "Roadway Standard Drawings"– Roadway Design Unit – N. C. Department of Transportation – Raleigh, N. C., dated January 2012 and the latest revison thereto are applicable to this project and by reference hereby are considered a part of these plans.

1604.01	Railroad Erosion Control Detail	1632.01	Rock Inlet Sediment Trap Type A
1605.01	Temporary Silt Fence	1632.02	Rock Inlet Sediment Trap Type B
1606.01	Special Sediment Control Fence	1632.03	Rock Inlet Sediment Trap Type C
1607.01	Gravel Construction Entrance	1633.01	Temporary Rock Silt Check Type A
1622.01	Temporary Berms and Slope Drains	1633.02	Temporary Rock Silt Check Type B
1630.01	Riser Basin	1634.01	Temporary Rock Sediment Dam Type A
1630.02	Silt Basin Type B	1634.02	Temporary Rock Sediment Dam Type B
1630.03	Temporary Silt Ditch	1635.01	Rock Pipe Inlet Sediment Trap Type A
1630.04	Stilling Basin	1635.02	Rock Pipe Inlet Sediment Trap Type B
1630.05	Temporary Diversion	1640.01	Coir Fiber Baffle
1630.06	Special Stilling Basin	1645.01	Temporary Stream Crossing
1631.01	Matting Installation		

4/21/2014 K:\RAL_Roadway\OI\036192 – 400330\Roadway\Proj\400330_rdy_ero_1stdgn

PROJECT REFERENCE NO.	SHEET NO.
17BP.7.RJO	EC-2

TEMPORARY ROCK SILT CHECK TYPE 'A' WITH EXCELSIOR MATTING AND POLYACRYLAMIDE (PAM)

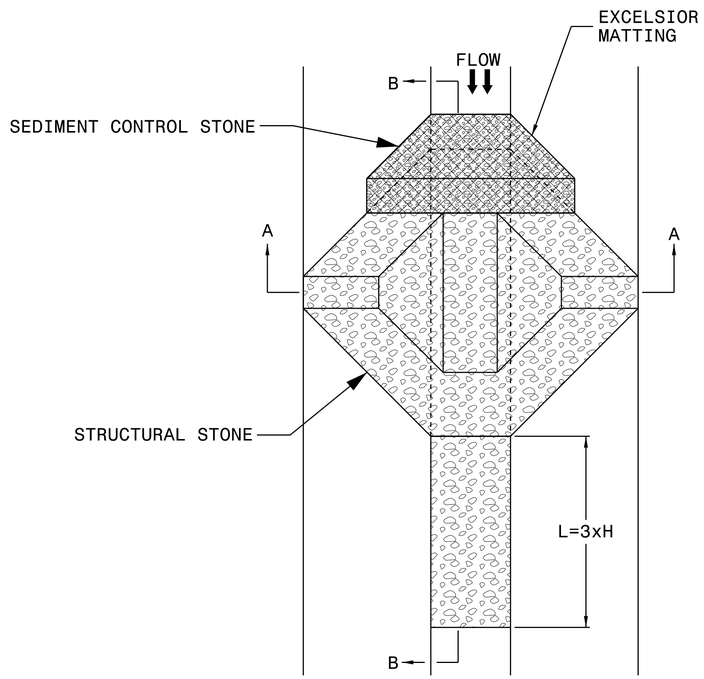

PLAN

NOTES

USE EXCELSIOR FOR MATTING MATERIAL AND ANCHOR MATTING SECTION AT TOP AND BOTTOM WITH CLASS B STONE.

PRIOR TO POLYACRYLAMIDE (PAM) APPLICATION, OBTAIN A SOIL SAMPLE FROM PROJECT LOCATION, AND FROM OFFSITE MATERIAL, AND ANALYZE FOR APPROPRIATE PAM FLOCCULANT TO BE APPLIED TO EACH ROCK SILT CHECK.

INITIALLY APPLY 3.5 OUNCES OF POLYACRYLAMIDE (PAM) TO TOP OF MATTING SECTION AND AFTER EVERY RAINFALL EVENT THAT EQUALS OR EXCEEDS 0.50 INCHES.

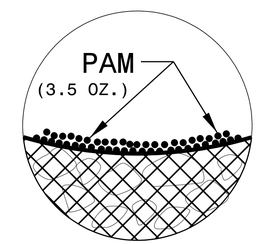

INSET A

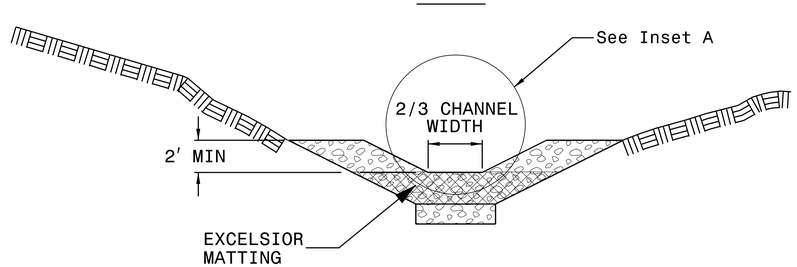

SECTION A-A

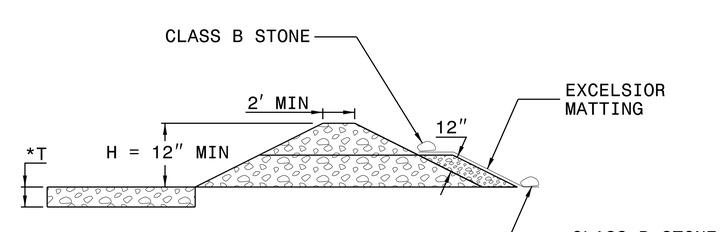

SECTION B-B

*T = 12" MIN., 18" MAX.

NOT TO SCALE

K:\RAL_Roadway\01\036/92 - 400330\Roadway\Proj\400330_rdy_ero_psh_2&3.dgn

4/18/2014

PROJECT REFERENCE NO.	SHEET NO.
17BP.7.RJ0	EC-2A

WATTLE WITH POLYACRYLAMIDE (PAM) DETAIL

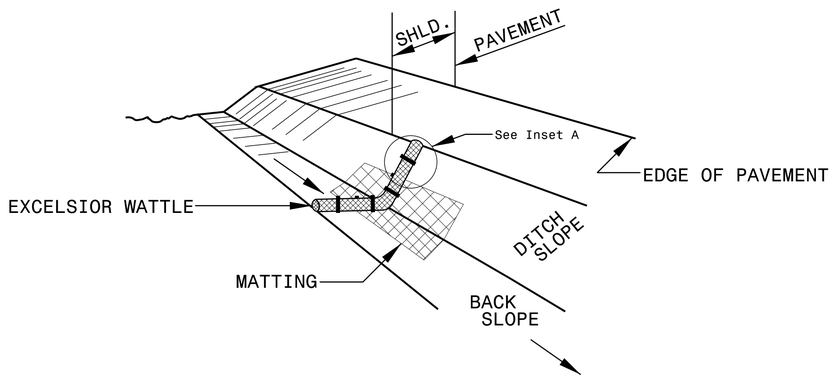

ISOMETRIC VIEW

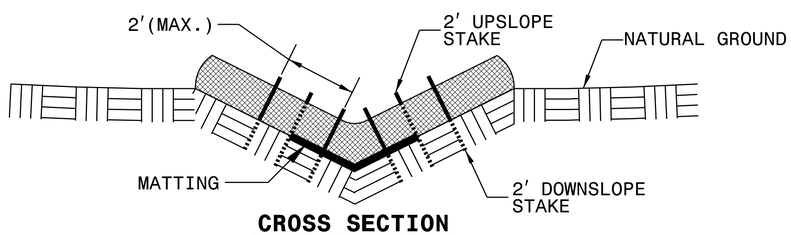

CROSS SECTION VEE DITCH

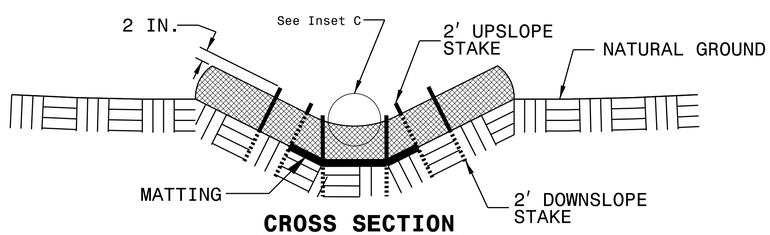

CROSS SECTION TRAPEZOIDAL DITCH

NOTES:

USE MINIMUM 12 IN. DIAMETER EXCELSIOR WATTLE.

USE 2 FT. WOODEN STAKES WITH A 2 IN. BY 2 IN. NOMINAL CROSS SECTION.

ONLY INSTALL WATTLE(S) TO A HEIGHT IN DITCH SO FLOW WILL NOT WASH AROUND WATTLE AND SCOUR DITCH SLOPES AND AS DIRECTED.

INSTALL A MINIMUM OF 2 UPSLOPE STAKES AND 4 DOWNSLOPE STAKES AT AN ANGLE TO WEDGE WATTLE TO BOTTOM OF DITCH.

PROVIDE STAPLES MADE OF 0.125 IN. DIAMETER STEEL WIRE FORMED INTO A U SHAPE NOT LESS THAN 12" IN LENGTH.

INSTALL STAPLES APPROXIMATELY EVERY 1 LINEAR FOOT ON BOTH SIDES OF WATTLE AND AT EACH END TO SECURE IT TO THE SOIL.

INSTALL MATTING IN ACCORDANCE WITH SECTION 1631 OF THE STANDARD SPECIFICATIONS.

PRIOR TO POLYACRYLAMIDE (PAM) APPLICATION, OBTAIN A SOIL SAMPLE FROM PROJECT LOCATION, AND FROM OFFSITE MATERIAL, AND ANALYZE FOR APPROPRIATE PAM FLOCCULANT TO BE APPLIED TO EACH WATTLE.

INITIALLY APPLY 2 OUNCES OF ANIONIC OR NEUTRALLY CHARGED PAM OVER WATTLE WHERE WATER WILL FLOW AND 1 OUNCE OF PAM ON MATTING ON EACH SIDE OF WATTLE. REAPPLY PAM AFTER EVERY RAINFALL EVENT THAT IS EQUAL TO OR EXCEEDS 0.50 IN.

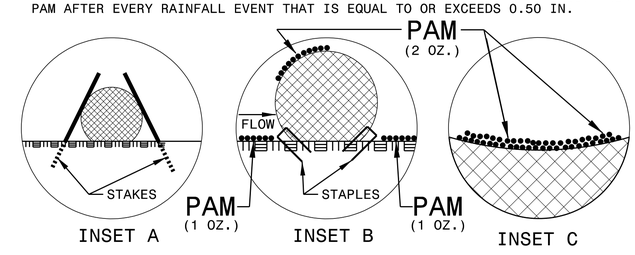

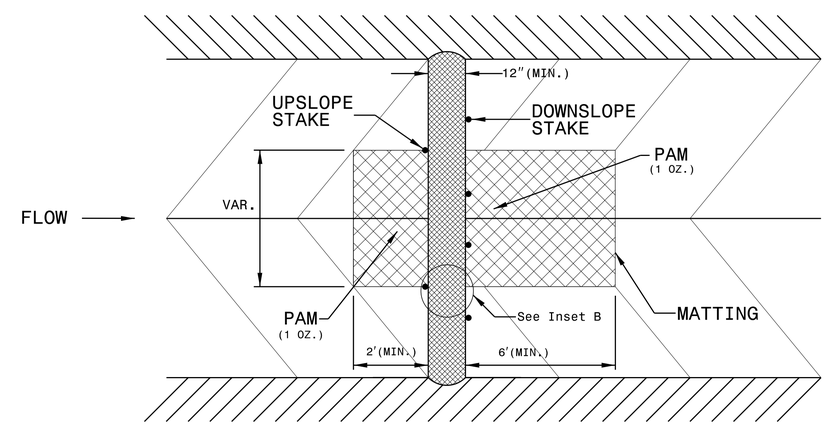

TOP VIEW

K:\RAL_Roadway\01\036192 - 400330\Roadway\Proj\400330_rdy_ero_psh_2&3.dgn

4/18/2014

PROJECT REFERENCE NO.	SHEET NO.
17BP.7.R.10	EC-3

DIVISION OF HIGHWAYS
STATE OF NORTH CAROLINA

SOIL STABILIZATION SUMMARY SHEET

MATTING FOR EROSION CONTROL

CONST SHEET NO.	LINE	FROM STATION	TO STATION	SIDE	ESTIMATE (SY)
			SUBTOTAL		0
MISCELLANEOUS MATTING TO BE INSTALLED AS DIRECTED BY THE ENGINEER					6295
				TOTAL	6295
				SAY	6300

PERMANENT SOIL REINFORCEMENT MAT

CONST SHEET NO.	LINE	FROM STATION	TO STATION	SIDE	ESTIMATE (SY)
4	-L-	10+13	13+55	RT	225
4	-L-	12+95	13+25	LT	25
			SUBTOTAL		250
		ADDITIONAL PSRM TO BE INSTALLED			0
				TOTAL	250
				SAY	250

K:\RAL_Roadway\DII036192 - 400330\Roadway\Proj\400330_rdy_ero_psh_2&3.dgn

4/18/2014

PROJECT REFERENCE NO.	SHEET NO.
17BP.7.R.10	EC-3A

DIVISION OF HIGHWAYS
STATE OF NORTH CAROLINA

SOIL STABILIZATION TIMEFRAMES

SITE DESCRIPTION	STABILIZATION TIME	TIMEFRAME EXCEPTIONS
PERIMETER DIKES, SWALES, DITCHES AND SLOPES	7 DAYS	NONE
HIGH QUALITY WATER (HQW) ZONES	7 DAYS	NONE
SLOPES STEEPER THAN 3:1	7 DAYS	IF SLOPES ARE 10' OR LESS IN LENGTH AND ARE NOT STEEPER THAN 2:1, 14 DAYS ARE ALLOWED.
SLOPES 3:1 OR FLATTER	14 DAYS	7 DAYS FOR SLOPES GREATER THAN 50' IN LENGTH.
ALL OTHER AREAS WITH SLOPES FLATTER THAN 4:1	14 DAYS	NONE, EXCEPT FOR PERIMETERS AND HQW ZONES.

K:\RAL_Roadway\01103692 - 400330\Roadway\Proj\400330_rdy_ero_psh_2&3.dgn
4/18/2014

EROSION CONTROL PLAN

PROJECT REFERENCE NO.	SHEET NO.
17BP.7.R.28	EC-4/CONST.4
R/W SHEET NO.	
ROADWAY DESIGN ENGINEER	HYDRAULICS ENGINEER

Kimley-Horn and Associates, Inc.

P.O. BOX 33068
RALEIGH, N.C. 27636-3068

NORTH CAROLINA PROFESSIONAL SEAL 024436 ENGINEER JEFFREY W. MOORE 4-21-14

RIGHT-OF-WAY REV.

CONST. REV.

REVISIONS

CLEARING AND GRUBBING
EROSION CONTROL FOR
CONSTRUCTION SHEET 4

NOTE: UTILIZE SPECIAL STILLING BASIN(S) WHERE APPLICABLE

NOTES: ANY DEVIATION FROM OPTIONS GIVEN WILL REQUIRE PRIOR APPROVAL BY ENGINEER.

ADDITIONAL EROSION CONTROL DEVICES MAY NEED TO BE INSTALLED AS DIRECTED BY THE ENGINEER.

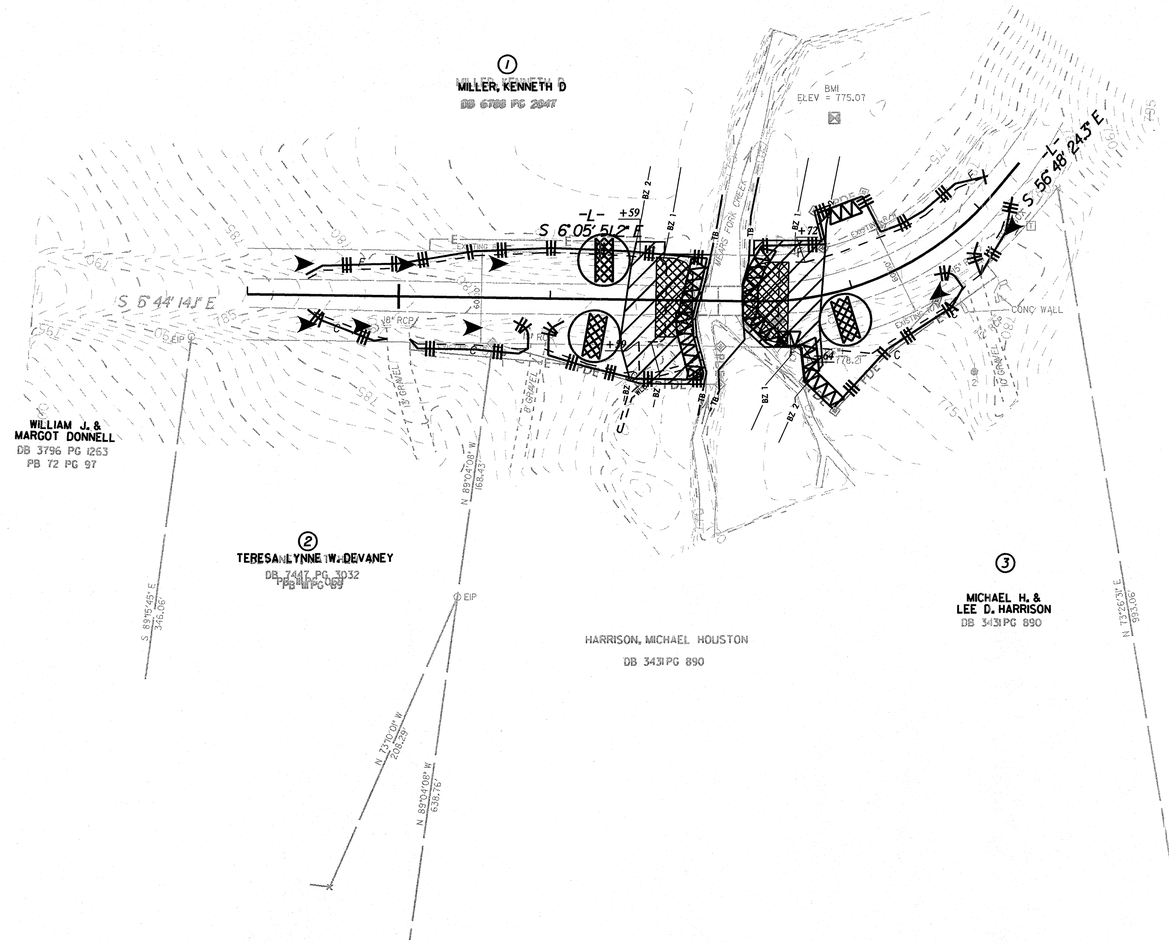

ENVIRONMENTALLY SENSITIVE AREA
SEE PROJECT SPECIAL PROVISIONS

K:\RAL_Roadway\01\036192 – 400330\Roadway\Proj\400330_rdy_ero_psh_4.dgn

4/21/2014

EROSION CONTROL PLAN

PROJECT REFERENCE NO.	SHEET NO.
17BP.7.R.28	EC-5/CONST.4
R/W SHEET NO.	
ROADWAY DESIGN ENGINEER	HYDRAULICS ENGINEER

Kimley-Horn and Associates, Inc.
P.O. BOX 33068
RALEIGH, N.C. 27636-3068

NORTH CAROLINA PROFESSIONAL SEAL 024436 ENGINEER JEFFREY W. HOOKS 4-21-14

RIGHT-OF-WAY REV.

CONST. REV.

REVISIONS

NC GRID NAD 83/NSRS 2007

NOTES: ANY DEVIATION FROM OPTIONS GIVEN WILL REQUIRE PRIOR APPROVAL BY ENGINEER.

ADDITIONAL EROSION CONTROL DEVICES MAY NEED TO BE INSTALLED AS DIRECTED BY THE ENGINEER.

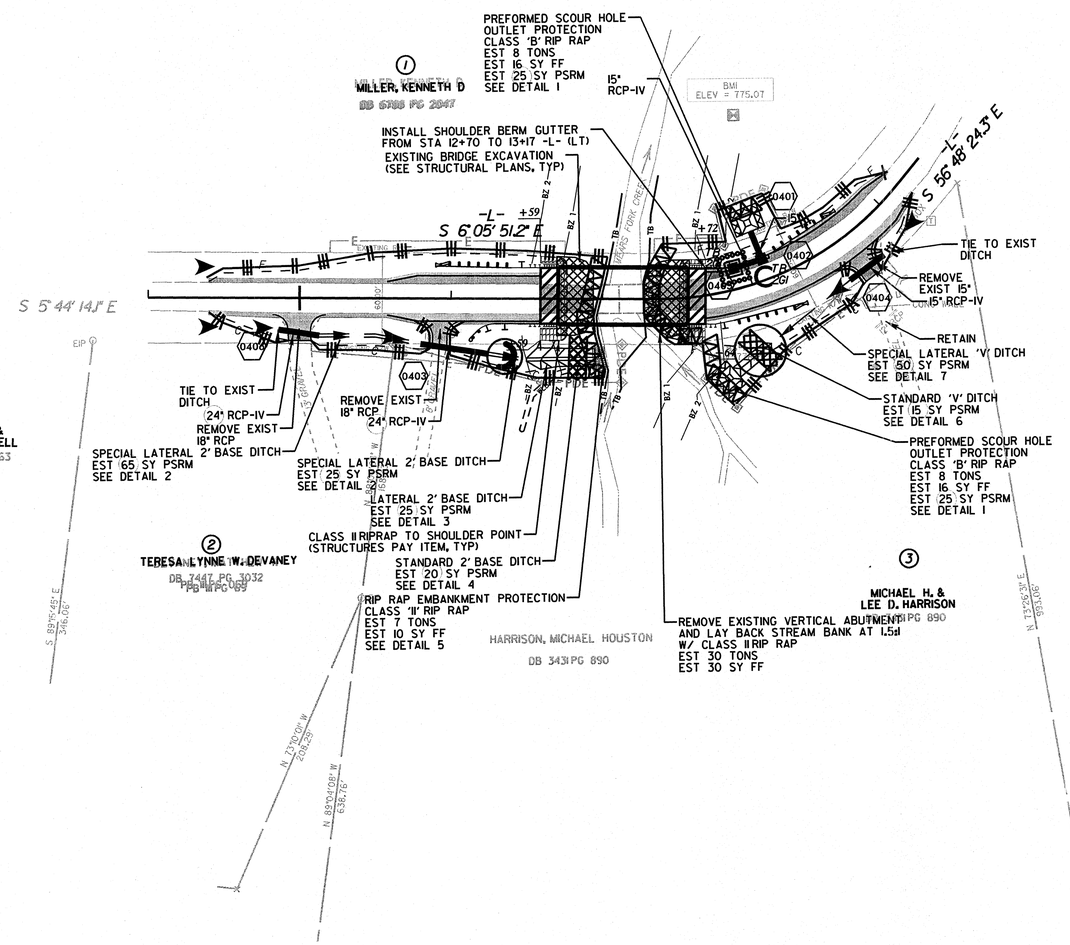

DETAIL 1
PREFORMED SCOUR HOLE
*NOT TO SCALE

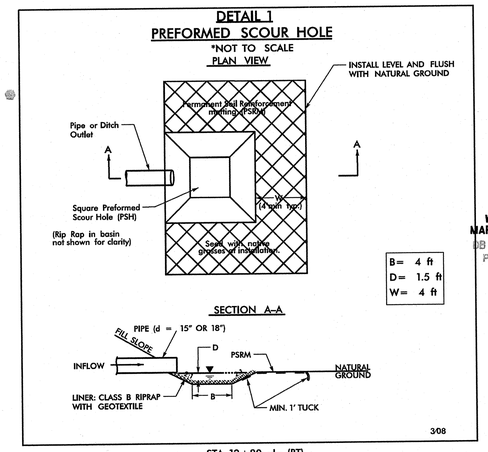

STA. 12+80 -L- (RT)
STA. 13+11 -L- (LT)

DETAIL 2
SPECIAL LATERAL BASE DITCH
(Not to Scale)

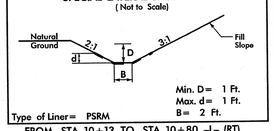

FROM STA. 10+13 TO STA. 10+80 -L- (RT)
FROM STA. 11+25 TO STA. 11+50 -L- (RT)

DETAIL 3
LATERAL BASE DITCH
(Not to Scale)

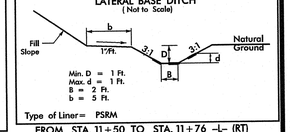

FROM STA. 11+50 TO STA. 11+76 -L- (RT)

DETAIL 4
STANDARD BASE DITCH
(Not to Scale)

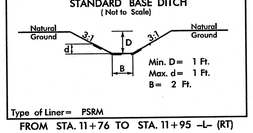

FROM STA. 11+76 TO STA. 11+95 -L- (RT)

DETAIL 5
RIP RAP AT EMBANKMENT
(Not to Scale)

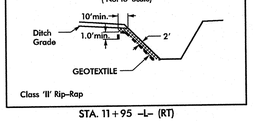

STA. 11+95 -L- (RT)

DETAIL 6
STANDARD 'V' DITCH
(Not to Scale)

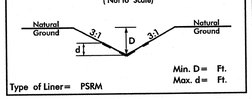

FROM STA. 12+80 TO STA. 13+00 -L- (RT)

DETAIL 7
SPECIAL LATERAL 'V' DITCH
(Not to Scale)

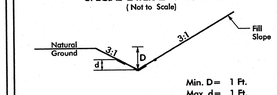

FROM STA. 13+00 TO STA. 13+55 -L- (RT)

K:\RAL_Roadway\01103192 - 400330\Roadway\Proj\400330_rdy_ero_psh_5.dgn
4/21/2014

PLANTING DETAILS

SEEDLING / LINER BAREROOT PLANTING DETAIL

HEALING IN

1. Locate a healing-in site in a shady, well protected area.
2. Excavate a flat bottom trench 12 inches deep and provide drainage.

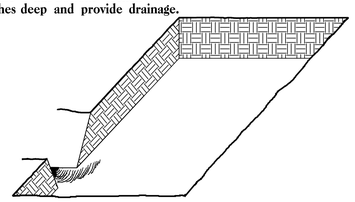

3. Backfill the trench with 2 inches well rotted sawdust. Place a 2 inch layer of well rotted sawdust at a sloping angle at one end of the trench.

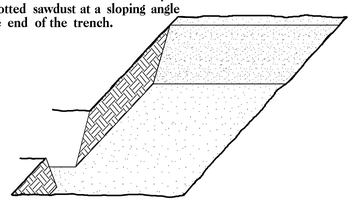

4. Place a single layer of plants against the sloping end so that the root collar is at ground level.

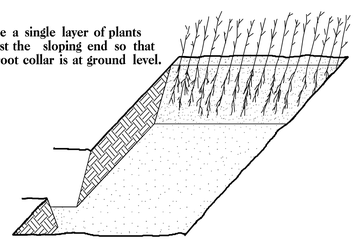

5. Place a 2 inch layer of well rotted sawdust over the roots maintaining a sloping angle.

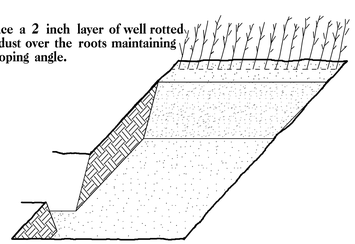

6. Repeat layers of plants and sawdust as necessary and water thoroughly.

DIBBLE PLANTING METHOD
USING THE KBC PLANTING BAR

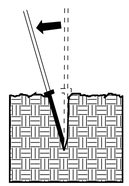

1. Insert planting bar as shown and pull handle toward planter.

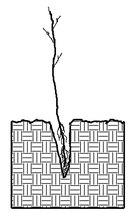

2. Remove planting bar and place seedling at correct depth.

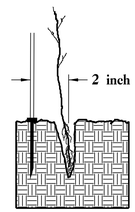

3. Insert planting bar 2 inches toward planter from seedling.

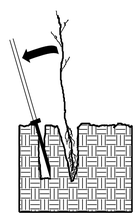

4. Pull handle of bar toward planter, firming soil at bottom.

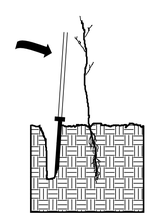

5. Push handle forward firming soil at top.

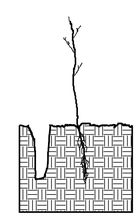

6. Leave compaction hole open. Water thoroughly.

PLANTING NOTES:

PLANTING BAG
During planting, seedlings shall be kept in a moist canvas bag or similar container to prevent the root systems from drying.

KBC PLANTING BAR
Planting bar shall have a blade with a triangular cross section, and shall be 12 inches long, 4 inches wide and 1 inch thick at center.

ROOT PRUNING
All seedlings shall be root pruned, if necessary, so that no roots extend more than 10 inches below the root collar.

REFORESTATION

☐ TREE REFORESTATION SHALL BE PLANTED 6 FT. TO 10 FT. ON CENTER, RANDOM SPACING, AVERAGING 8 FT. ON CENTER, APPROXIMATELY 680 PLANTS PER ACRE.

REFORESTATION

MIXTURE, TYPE, SIZE, AND FURNISH SHALL CONFORM TO THE FOLLOWING:

25%	LIRIODENDRON TULIPIFERA	TULIP POPLAR	12in - 18in BR
25%	PLATANUS OCCIDENTALIS	SYCAMORE	12in - 18in BR
25%	FRAXINUS PENNSYLVANICA	GREEN ASH	12in - 18in BR
25%	BETULA NIGRA	RIVER BIRCH	12in - 18in BR

REFORESTATION DETAIL SHEET

N.C.D.O.T. - ROADSIDE ENVIRONMENTAL UNIT

K:\RAL_Roadway\011036(9) - 400300\Roadway\Pro\400300_rdy_rf_1.dgn
4/18/2014

0 5 10	PROJ. REFERENCE NO.	SHEET NO.
	17BP.7.R.28	X-1

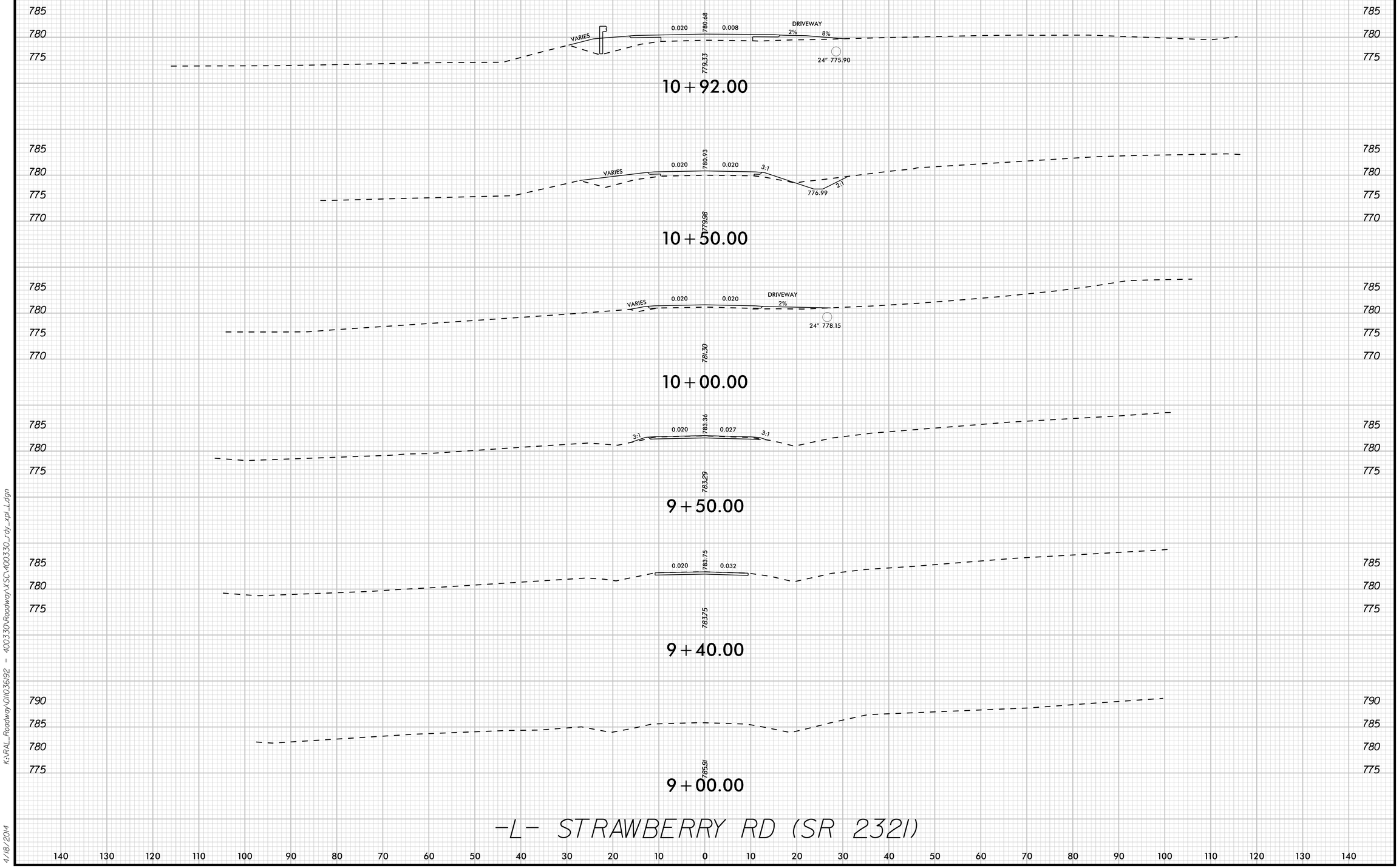

K:\RAL_Roadway\011036192 - 400330\Roadway\XSC\400330_rdy_xpl_L.dgn

4/18/2014

0 5 10	PROJ. REFERENCE NO.	SHEET NO.
	17BP.7.R.28	X-2

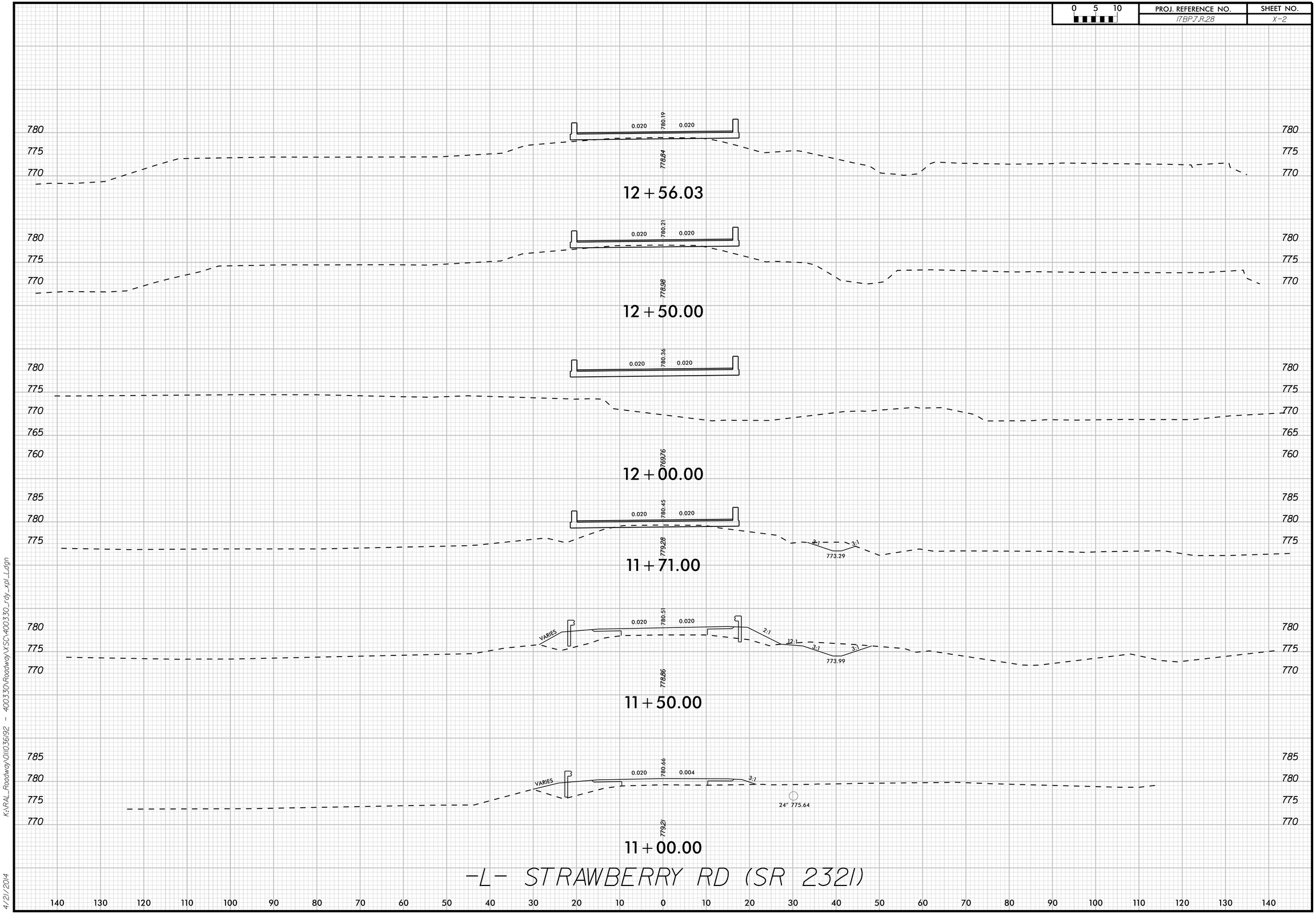

K:\RAL_Roadway\011036192 - 400330\Roadway\XSC\400330_rdy_xpl_L.dgn

4/21/2014

0 5 10	PROJ. REFERENCE NO.	SHEET NO.
	17BP.7.R.28	X-3

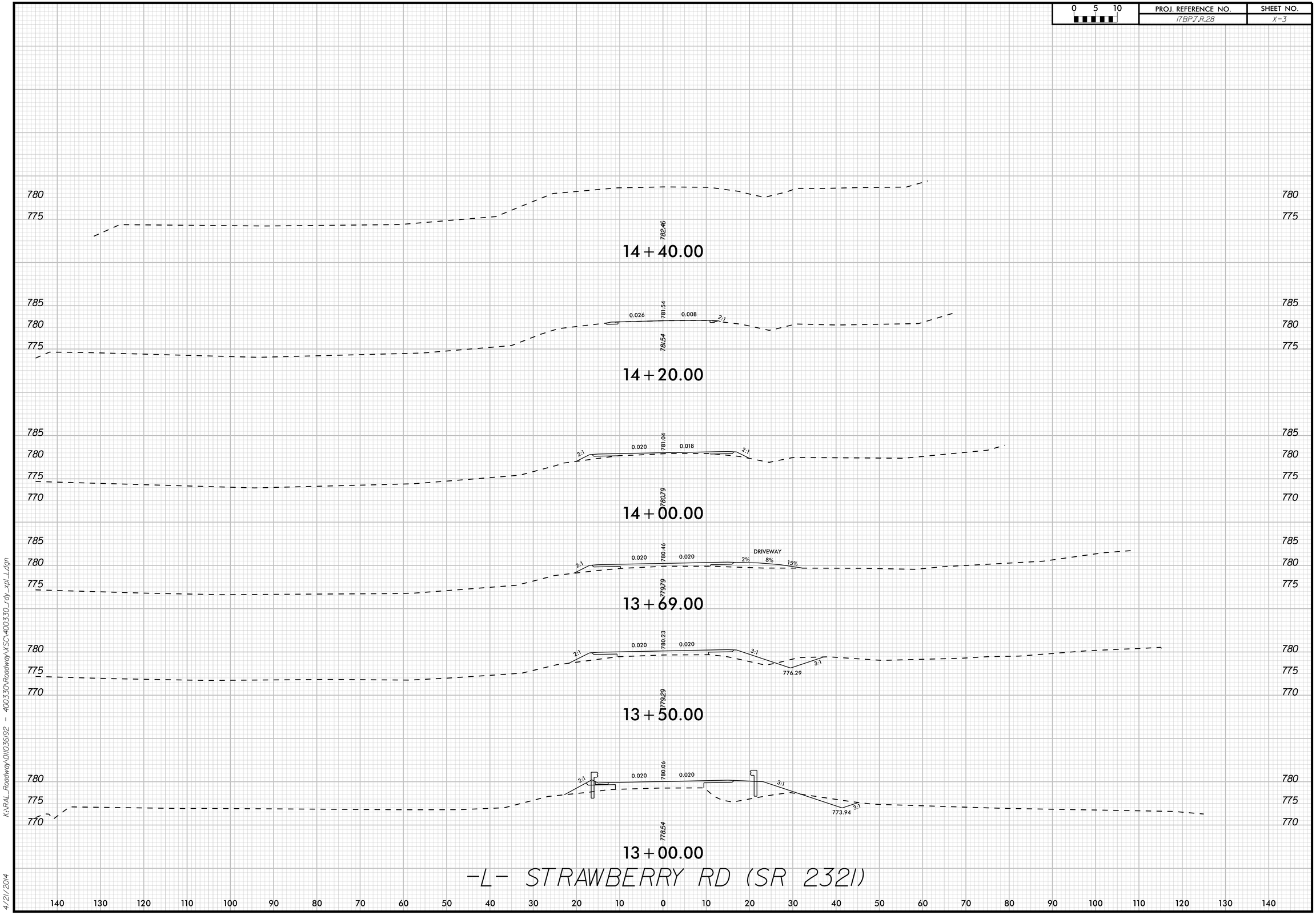

K:\RAL_Roadway\01103619.2 - 400330\Roadway\XSC\400330_rdy_xpl_L.dgn

4/21/2014

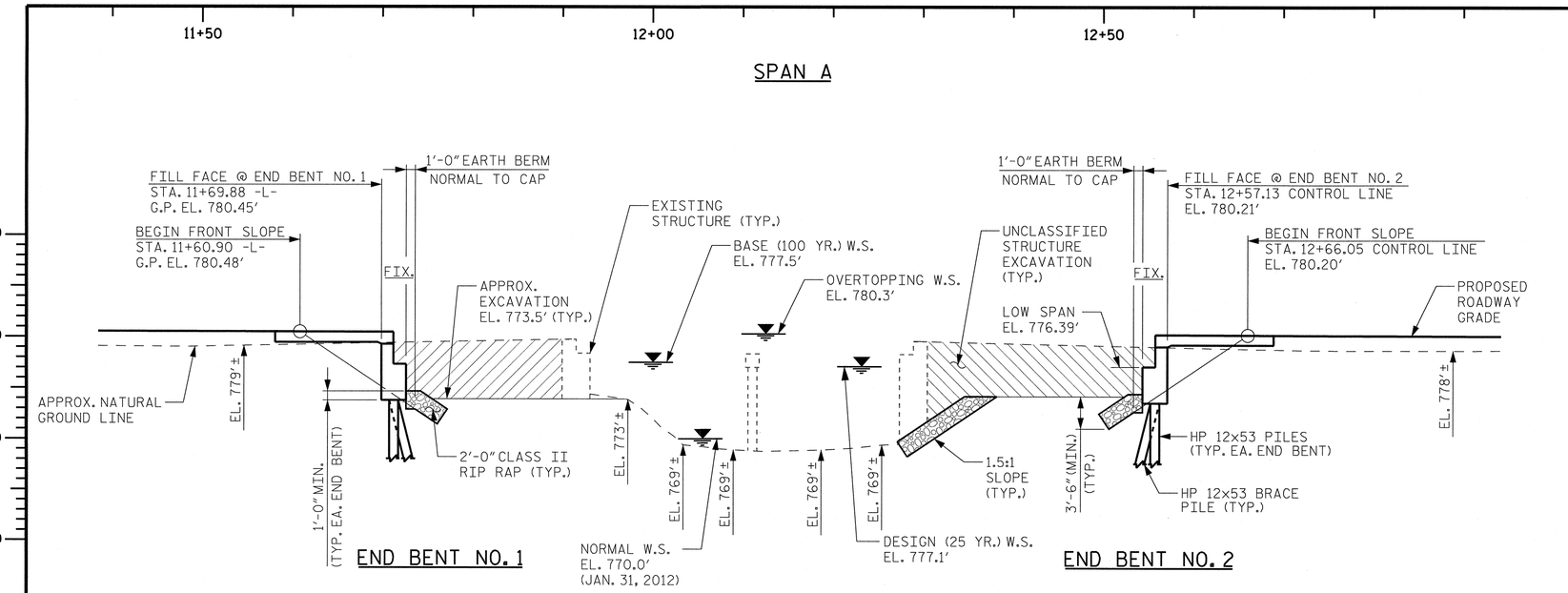

SECTION ALONG CONTROL LINE

(-)4.0286% △ (-)0.3000% △ (+)2.7667%

-L- VERTICAL CURVE DATA

PVI STA. = 10+10.00
EL. = 780.93'
VC = 140'

PVI STA. = 13+60.00
EL. = 779.88'
VC = 120'

-L- HORIZONTAL CURVE DATA

PI STA. 13+31.76
△ = 50°-42'-33.1' (LT)
D = 28°-38'-52.4'
L = 177.01'
T = 94.77'
R = 200.00'

NOTES

THIS BRIDGE HAS BEEN DESIGNED IN ACCORDANCE WITH THE REQUIREMENTS OF THE AASHTO LRFD BRIDGE DESIGN SPECIFICATIONS.

ASSUMED LIVE LOAD = HL-93 OR ALTERNATE LOADING.

THIS BRIDGE IS LOCATED IN SEISMIC ZONE 1.

FOR OTHER DESIGN DATA AND GENERAL NOTES, SEE SHEET SN.

FOR EROSION CONTROL MEASURES, SEE EROSION CONTROL PLANS.

FOR ADDITIONAL INFORMATION REGARDING DRAINAGE, GRADING, AND ROADWAY, SEE ROADWAY PLANS.

THIS STRUCTURE HAS BEEN DESIGNED IN ACCORDANCE WITH "HEC 18-EVALUATING SCOUR AT BRIDGES".

FOR CRANE SAFETY, SEE SPECIAL PROVISIONS.

FOR FALSEWORK AND FORMWORK, SEE SPECIAL PROVISIONS.

FOR GROUT FOR STRUCTURES, SEE SPECIAL PROVISIONS.

FOR SUBMITTAL OF WORKING DRAWINGS, SEE SPECIAL PROVISIONS.

THE EXISTING STRUCTURE CONSISTING OF (2) SPANS OF 17'-6" WITH TIMBER DECK AND GIRDERS, AND A CLEAR ROADWAY WIDTH OF 19' ON TIMBER VERTICAL ABUTMENTS WITH STEEL CRUTCH BENT TO BE REPLACED, IN PLACE, WITH THE PROPOSED STRUCTURE. THE EXISTING BRIDGE IS PRESENTLY NOT POSTED BELOW THE LEGAL LIMIT. SHOULD THE STRUCTURAL INTEGRITY OF THE BRIDGE DETERIORATE, A LOAD LIMIT MAY BE POSTED AND REDUCED AS FOUND NECESSARY.

REMOVAL OF THE EXISTING BRIDGE SHALL BE PERFORMED SO AS NOT TO ALLOW DEBRIS TO FALL INTO THE WATER. THE CONTRACTOR SHALL REMOVE THE BRIDGE AND SUBMIT PLANS FOR THE DEMOLITION IN ACCORDANCE WITH ARTICLE 402-2 OF THE STANDARD SPECIFICATIONS.

THE SUBSTRUCTURE OF THE EXISTING BRIDGE INDICATED ON THE PLANS IS FROM THE BEST INFORMATION AVAILABLE. SINCE THIS INFORMATION IS SHOWN FOR THE CONVENIENCE OF THE CONTRACTOR, THE CONTRACTOR SHALL HAVE NO CLAIM WHATSOEVER AGAINST THE DEPARTMENT OF TRANSPORTATION FOR ANY DELAYS OR ADDITIONAL COST INCURRED BASED ON DIFFERENCES BETWEEN THE EXISTING BRIDGE SUBSTRUCTURE SHOW ON THE PLANS AND THE ACTUAL CONDITIONS AT THE PROJECT SITE. CUTTING OFF THE EXISTING PILES BELOW THE PROPOSED FINISHED GRADE WILL BE REQUIRED.

THE MATERIAL SHOWN IN THE CROSS-HATCHED AREA SHALL BE EXCAVATED AS DIRECTED BY THE ENGINEER ON THE ROADWAY AND STRUCTURES PLANS. THIS WORK WILL BE PAID FOR AT THE CONTRACT LUMP SUM PRICE FOR UNCLASSIFIED STRUCTURE EXCAVATION. SEE SECTION 412 OF THE STANDARD SPECIFICATIONS.

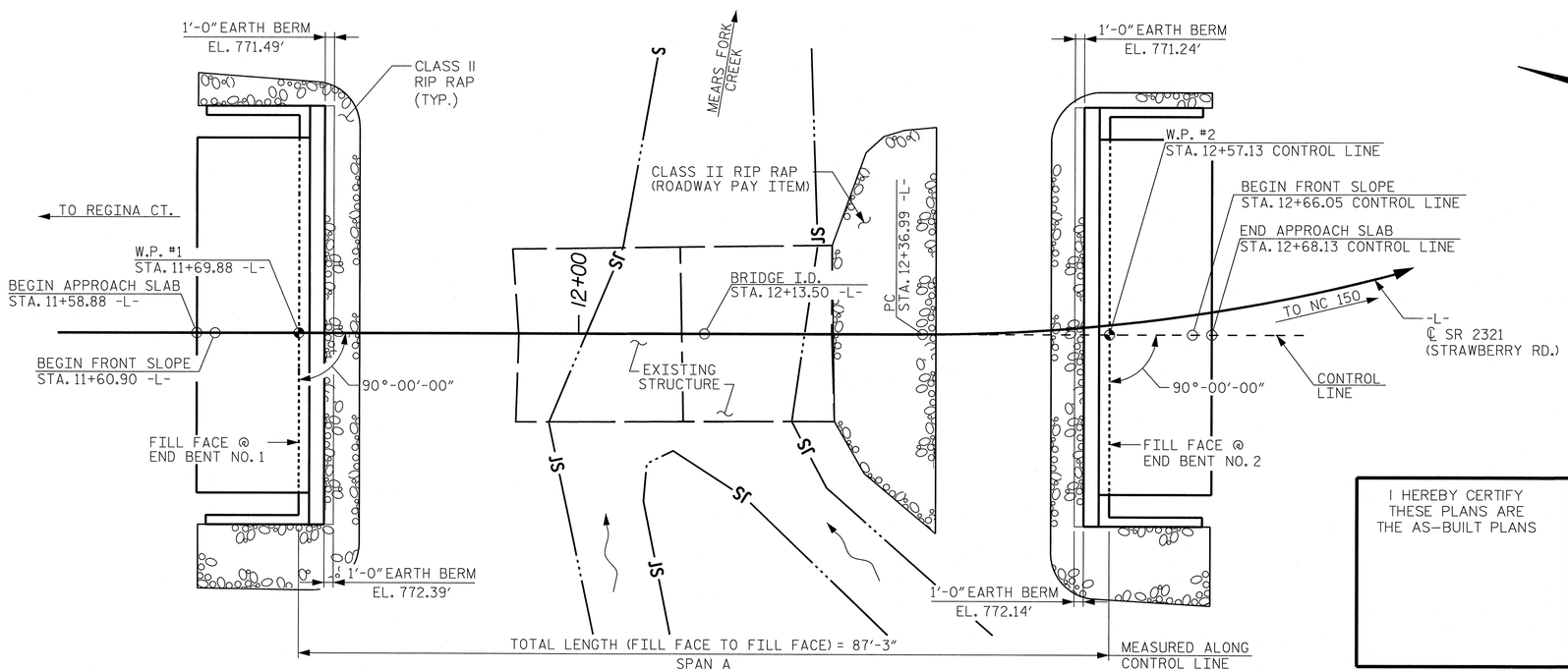

PLAN

(PILES NOT SHOWN IN PLAN VIEW.)

HYDRAULIC DATA

DESIGN DISCHARGE ----------1,600 CFS
FREQUENCY OF DESIGN FLOOD -------25 YR.
DESIGN HIGH WATER ELEVATION-----777.10 FT.
DRAINAGE AREA ----------3.0 SQ. MI.
BASE DISCHARGE (Q100) ----------2,100 CFS
BASE HIGH WATER ELEVATION ------777.50 FT.

OVERTOPPING FLOOD DATA

OVERTOPPING DISCHARGE ----------4,200 CFS
FREQUENCY OF OVERTOPPING FLOOD --->500 YR.
OVERTOPPING FLOOD ELEVATION ------780.26 FT.

I HEREBY CERTIFY THESE PLANS ARE THE AS-BUILT PLANS

NORTH CAROLINA PROFESSIONAL SEAL 035762 ENGINEER JOSEPH J. PICCIRILLI 03/14/14

PROJECT NO. 17BP.7.R.28
GUILFORD COUNTY
STATION: 12+13.50 -L-

SHEET 1 OF 3 REPLACES BRIDGE #400330

STATE OF NORTH CAROLINA
DEPARTMENT OF TRANSPORTATION
RALEIGH

GENERAL DRAWING
FOR BRIDGE OVER MEARS FORK CREEK ON SR 2321 (STRAWBERRY RD.)

Kimley-Horn and Associates, Inc.
333 Fayetteville Street, Suite 600
Raleigh, NC 27601-1772
Phone (919) 835-1494
NC LICENSE # F-0102

This document, together with the concepts and designs presented herein, as an instrument of services, is intended only for the specific purpose and client for which it was prepared. Reuse of and improper reliance of this document, without written authorization and adaption by Kimley-Horn and Associates, Inc. shall be without liability to Kimley-Horn and Associates, Inc.
Copyright Kimley-Horn and Associates, Inc., 2014

REVISIONS						SHEET NO.
NO.	BY:	DATE:	NO.	BY:	DATE:	S-1
1			3			TOTAL SHEETS
2			4			18

DRAWN BY: JFP DATE: 3/14
CHECKED BY: JCW DATE: 3/14

3/14/2014 K:\RDT_Structures\Bridge\NC\17BP Bridges - Group E\01\035192_BR400330\Cad\dgn\S-1.dgn

BENCHMARK: BM #1 -L- STA. 13+47.87, OFFSET 107.21' RT, ELEV = 775.07', R/R SPIKE IN 15" ASH

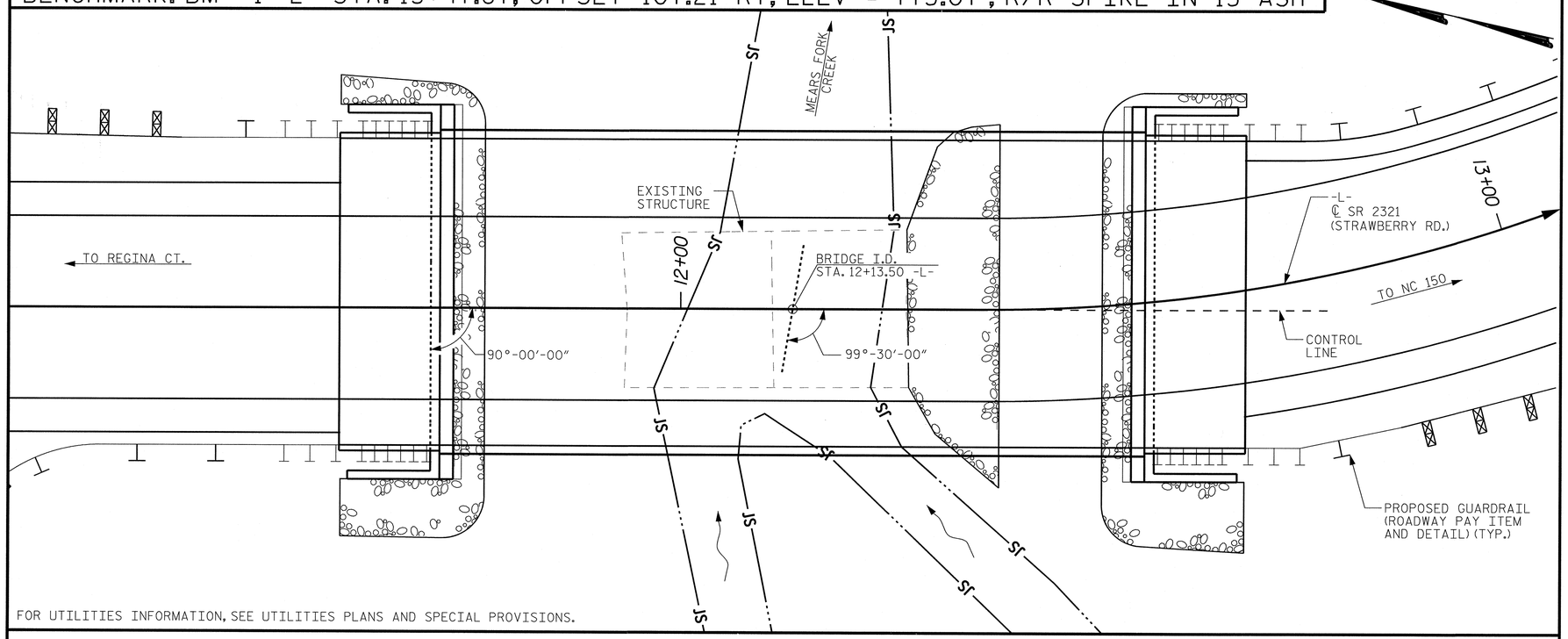

FOR UTILITIES INFORMATION, SEE UTILITIES PLANS AND SPECIAL PROVISIONS.

LOCATION SKETCH

NOTES

FOR PILES, SEE SECTION 450 OF THE STANDARD SPECIFICATIONS.

PILES AT END BENT NO. 1 AND NO. 2 ARE DESIGNED FOR A FACTORED RESISTANCE OF 115 TONS PER PILE.

DRIVE PILES AT END BENT NO. 1 AND NO. 2 TO A REQUIRED DRIVING RESISTANCE OF 195 TONS PER PILE.

STEEL H-PILE POINTS ARE REQUIRED FOR STEEL H-PILES. FOR STEEL PILE POINTS. SEE SECTION 450 OF THE STANDARD SPECIFICATIONS.

TOTAL BILL OF MATERIALS

	REMOVAL OF EXISTING STRUCTURE @ STA. 12+13.50	FOUNDATION EXCAVATION FOR END BENT 1 & 2 @ STA. 12+13.50	UNCLASSIFIED STRUCTURE EXCAVATION @ STA. 12+13.50	CONCRETE WEARING SURFACE	GROOVING BRIDGE FLOORS	CLASS A CONCRETE	BRIDGE APPROACH SLABS	REINFORCING STEEL	HP 12x53 STEEL PILES		STEEL PILE POINTS	VERTICAL CONCRETE BARRIER RAIL	RIP RAP CLASS II (2'-0" THICK)	GEOTEXTILE FOR DRAINAGE	ELAST. BEARINGS	3'-0"x2'-9" PRESTRESSED CONCRETE BOX BEAMS	
	LUMP SUM	LUMP SUM	LUMP SUM	SQ. FT.	SQ. FT.	C.Y.	LUMP SUM	LBS.	NO.	LIN. FT.	EA.	LIN. FT.	TONS	S.Y.	LUMP SUM	NO.	LIN. FT.
SUPERSTRUCTURE				3,131	3.697		LUMP SUM					170.0			LUMP SUM	13	1,105
END BENT 1		LUMP SUM	LUMP SUM			28.8		3,972	7	245	7		70	80			
END BENT 2		LUMP SUM	LUMP SUM			28.8		3,972	7	245	7		70	80			
TOTAL	LUMP SUM	LUMP SUM	LUMP SUM	3,131	3,697	57.6	LUMP SUM	7,944	14	490	14	170.0	140	160	LUMP SUM	13	1,105

PROJECT NO. 17BP.7.R.28

GUILFORD COUNTY

STATION: 12+13.50 -L-

SHEET 2 OF 3 REPLACES BRIDGE #400330

NORTH CAROLINA PROFESSIONAL SEAL 035762 ENGINEER JOSEPH J. PICCIRILLI 03/14/14

Kimley-Horn and Associates, Inc.
333 Fayetteville Street, Suite 600
Raleigh, NC 27601-1772
Phone (919) 835-1494
NC LICENSE # F-0102

This document, together with the concepts and designs presented herein, as an instrument of service, is intended only for the specific purpose and client for which it was prepared. Reuse of and improper reliance on this document without written authorization and adoption by Kimley-Horn and Associates, Inc. shall be without liability to Kimley-Horn and Associates, Inc.

Copyright Kimley-Horn and Associates, Inc., 2014

STATE OF NORTH CAROLINA
DEPARTMENT OF TRANSPORTATION
RALEIGH

GENERAL DRAWING
FOR BRIDGE OVER MEARS FORK CREEK ON SR 2321 (STRAWBERRY RD.)

REVISIONS							
NO.	BY:	DATE:	NO.	BY:	DATE:		
1			3				
2			4				

SHEET NO. S-2

TOTAL SHEETS 18

DRAWN BY: JFP DATE: 3/14
CHECKED BY: JCW DATE: 3/14

3/14/2014 K:\RDT_Structures_Bridge\NC\17BP Bridges - Group EX01\036192_BR400330\Cad\dgn\S-2.dgn

NOTES

BRIDGE WILL BE BUILT ON TANGENT. EDGES OF TRAVEL LANE AND ROADWAY CENTERLINE SHALL BE STRIPED ALONG -L-.

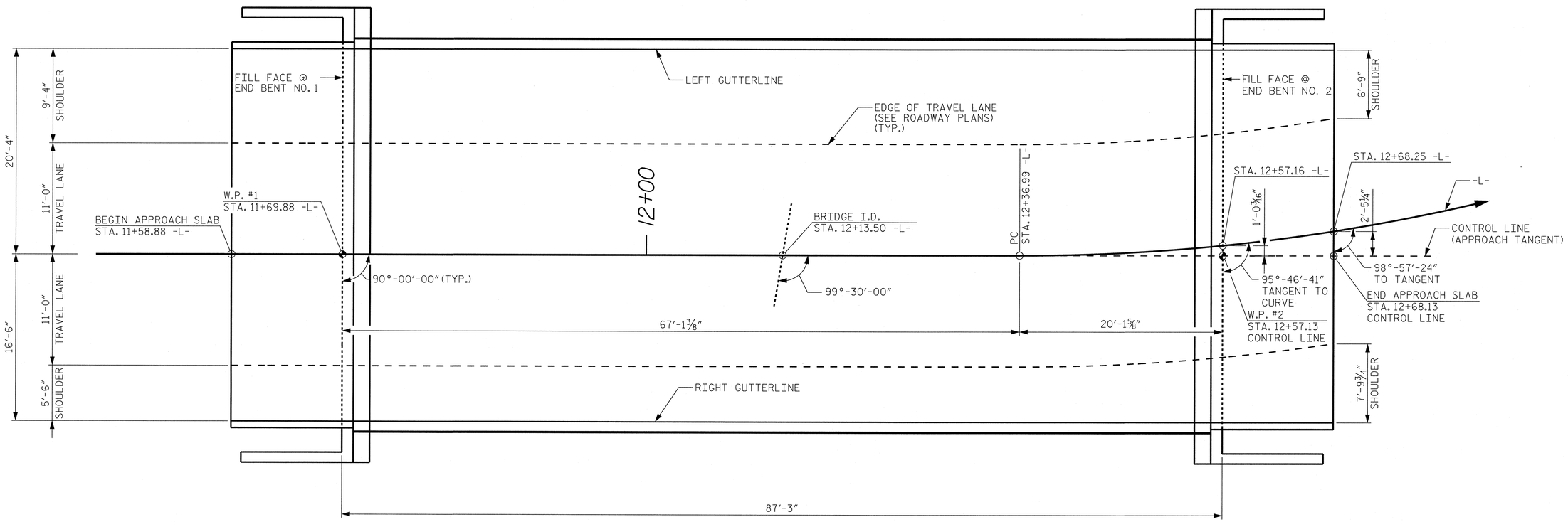

BRIDGE LAYOUT

PROJECT NO. 17BP.7.R.28

GUILFORD COUNTY

STATION: 12+13.50 -L-

SHEET 3 OF 3 REPLACES BRIDGE #400330

STATE OF NORTH CAROLINA
DEPARTMENT OF TRANSPORTATION
RALEIGH

GENERAL DRAWING
FOR BRIDGE OVER MEARS FORK CREEK ON SR 2321 (STRAWBERRY RD.)

NORTH CAROLINA PROFESSIONAL SEAL 035762 ENGINEER JOSEPH J. PICCIRILLI 03/14/14

Kimley-Horn and Associates, Inc.
333 Fayetteville Street, Suite 600
Raleigh, NC 27601-1772
Phone (919) 835-1494
NC LICENSE # F-0102

This document, together with the concepts and designs presented herein, as an instrument of services, is intended only for the specific purpose and client for which it was prepared. Reuse of and improper reliance of this document, without written authorization and adoption by Kimley-Horn and Associates, Inc. shall be without liability to Kimley-Horn and Associates, Inc.

Copyright Kimley-Horn and Associates, Inc., 2014

REVISIONS						SHEET NO.
NO.	BY:	DATE:	NO.	BY:	DATE:	S-3
1			3			TOTAL SHEETS
2			4			18

DRAWN BY: JFP DATE: 3/14
CHECKED BY: JCW DATE: 3/14

3/14/2014 K:\RDT_Structures_Bridges\NC\17BP Bridges - Group EV\01036192_BR400330\Cad\dgn\S-3.dgn

LOAD AND RESISTANCE FACTOR RATING (LRFD) SUMMARY FOR PRESTRESSED CONCRETE GIRDERS

LEVEL		VEHICLE	WEIGHT (W) (TONS)	CONTROLLING LOAD RATING	MINIMUM RATING FACTORS (RF)	TONS = W X RF	STRENGTH I LIMIT STATE											SERVICE III LIMIT STATE						COMMENT NUMBER
								MOMENT					SHEAR						MOMENT					
							LIVELOAD FACTORS	DISTRIBUTION FACTORS (DF)	RATING FACTOR	SPAN	GIRDER LOCATION	DISTANCE FROM LEFT END OF SPAN (ft)	DISTRIBUTION FACTORS (DF)	RATING FACTOR	SPAN	GIRDER LOCATION	DISTANCE FROM LEFT END OF SPAN (ft)	LIVELOAD FACTORS	DISTRIBUTION FACTORS (DF)	RATING FACTOR	SPAN	GIRDER LOCATION	DISTANCE FROM LEFT END OF SPAN (ft)	
DESIGN LOAD RATING		HL-93(Inv)	N/A	**1**	1.401	--	1.75	0.273	1.73	A	EL	41.75	0.497	1.54	A	EL	8.35	0.80	0.273	**1.40**	A	EL	**41.75**	
		HL-93(Opr)	N/A	--	1.994	--	1.35	0.273	2.25	A	EL	41.75	0.497	1.99	A	EL	8.35	N/A	--	--	--	--	--	
		HS-20(Inv)	36.000	**2**	1.882	67.762	1.75	0.273	2.33	A	EL	41.75	0.497	1.99	A	EL	8.35	0.80	0.273	**1.88**	A	EL	**41.75**	
		HS-20(Opr)	36.000	--	2.584	93.027	1.35	0.273	3.02	A	EL	41.75	0.497	2.58	A	EL	8.35	N/A	--	--	--	--	--	
LEGAL LOAD RATING	SV	SNSH	13.500	--	4.355	58.789	1.4	0.273	6.74	A	EL	41.75	0.497	6.03	A	EL	8.35	0.80	0.273	4.35	A	EL	41.75	
		SNGARBS2	20.000	--	3.199	63.989	1.4	0.273	4.95	A	EL	41.75	0.497	4.26	A	EL	8.35	0.80	0.273	3.20	A	EL	41.75	
		SNAGRIS2	22.000	--	3.011	66.245	1.4	0.273	4.66	A	EL	41.75	0.497	3.94	A	EL	8.35	0.80	0.273	3.01	A	EL	41.75	
		SNCOTTS3	27.250	--	2.166	59.016	1.4	0.273	3.35	A	EL	41.75	0.497	3.01	A	EL	8.35	0.80	0.273	2.17	A	EL	41.75	
		SNAGGRS4	34.925	--	1.792	62.595	1.4	0.273	2.77	A	EL	41.75	0.497	2.47	A	EL	8.35	0.80	0.273	1.79	A	EL	41.75	
		SNS5A	35.550	--	1.754	62.349	1.4	0.273	2.71	A	EL	41.75	0.497	2.49	A	EL	8.35	0.80	0.273	1.75	A	EL	41.75	
		SNS6A	39.950	--	1.602	63.995	1.4	0.273	2.48	A	EL	41.75	0.497	2.27	A	EL	8.35	0.80	0.273	1.60	A	EL	41.75	
		SNS7B	42.000	--	1.525	64.059	1.4	0.273	2.36	A	EL	41.75	0.497	2.22	A	EL	8.35	0.80	0.273	1.53	A	EL	41.75	
	TTST	TNAGRIT3	33.000	--	1.951	64.392	1.4	0.273	3.02	A	EL	41.75	0.497	2.7	A	EL	8.35	0.80	0.273	1.95	A	EL	41.75	
		TNT4A	33.075	--	1.958	64.758	1.4	0.273	3.03	A	EL	41.75	0.497	2.64	A	EL	8.35	0.80	0.273	1.96	A	EL	41.75	
		TNT6A	41.600	--	1.594	66.309	1.4	0.273	2.47	A	EL	41.75	0.497	2.34	A	EL	8.35	0.80	0.273	1.59	A	EL	41.75	
		TNT7A	42.000	--	1.598	67.128	1.4	0.273	2.47	A	EL	41.75	0.497	2.3	A	EL	8.35	0.80	0.273	1.60	A	EL	41.75	
		TNT7B	42.000	--	1.645	69.07	1.4	0.273	2.54	A	EL	41.75	0.497	2.17	A	EL	8.35	0.80	0.273	1.64	A	EL	41.75	
		TNAGRIT4	43.000	--	1.571	67.556	1.4	0.273	2.43	A	EL	41.75	0.497	2.11	A	EL	8.35	0.80	0.273	1.57	A	EL	41.75	
		TNAGT5A	45.000	--	1.484	66.8	1.4	0.273	2.3	A	EL	41.75	0.497	2.08	A	EL	8.35	0.80	0.273	1.48	A	EL	41.75	
		TNAGT5B	45.000	**3**	1.469	66.118	1.4	0.273	2.27	A	EL	41.75	0.497	2	A	EL	8.35	0.80	0.273	**1.47**	A	EL	**41.75**	

LOAD FACTORS:

DESIGN LOAD RATING FACTORS	LIMIT STATE	γ_{DC}	γ_{DW}
	STRENGTH I	1.25	1.50
	SERVICE III	1.00	1.00

NOTES:

MINIMUM RATING FACTORS ARE BASED ON THE STRENGTH I AND SERVICE III LIMIT STATES.

ALLOWABLE STRESSES FOR SERVICE III LIMIT STATE ARE AS REQUIRED FOR DESIGN.

COMMENTS:

1.
2.
3.
4.

(#) CONTROLLING LOAD RATING

(1) DESIGN LOAD RATING (HL-93)

(2) DESIGN LOAD RATING (HS-20)

(3) LEGAL LOAD RATING **

** SEE CHART FOR VEHICLE TYPE

GIRDER LOCATION

I - INTERIOR GIRDER
EL - EXTERIOR LEFT GIRDER
ER - EXTERIOR RIGHT GIRDER

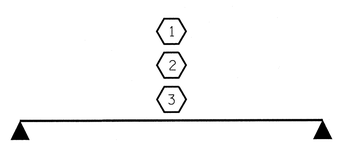

PROJECT NO. 17BP.7.R.28

GUILFORD COUNTY

STATION: 12+13.50 -L-

REPLACES BRIDGE #400330

Kimley-Horn and Associates, Inc.
333 Fayetteville Street, Suite 600
Raleigh, NC 27601-1772
Phone (919) 835-1494
NC LICENSE # F-0102

This document, together with the concepts and designs presented herein, as an instrument of services, is intended only for the specific purpose and client for which it was prepared. Reuse of and improper reliance of this document without written authorization and adoption by Kimley-Horn and Associates, Inc. shall be without liability to Kimley-Horn and Associates, Inc.

Copyright Kimley-Horn and Associates, Inc., 2014

STATE OF NORTH CAROLINA
DEPARTMENT OF TRANSPORTATION
RALEIGH

STANDARD

LRFR SUMMARY FOR
85' BOX BEAM UNIT
90° SKEW
(NON-INTERSTATE TRAFFIC)

REVISIONS						SHEET NO.
NO.	BY:	DATE:	NO.	BY:	DATE:	S-4
1			3			TOTAL SHEETS
2			4			18

ASSEMBLED BY : JFP	DATE : 3/14
CHECKED BY : JCW	DATE : 3/14
DRAWN BY: TMG II/II	
CHECKED BY: AAC II/II	

STD. NO. 33LRFR1_90S_85L

K:\RDT_Structures_Bridge\NC\17BP Bridges - Group 1\01036192_BR400330\Cad\dgn\S-4.dgn
3/14/2014

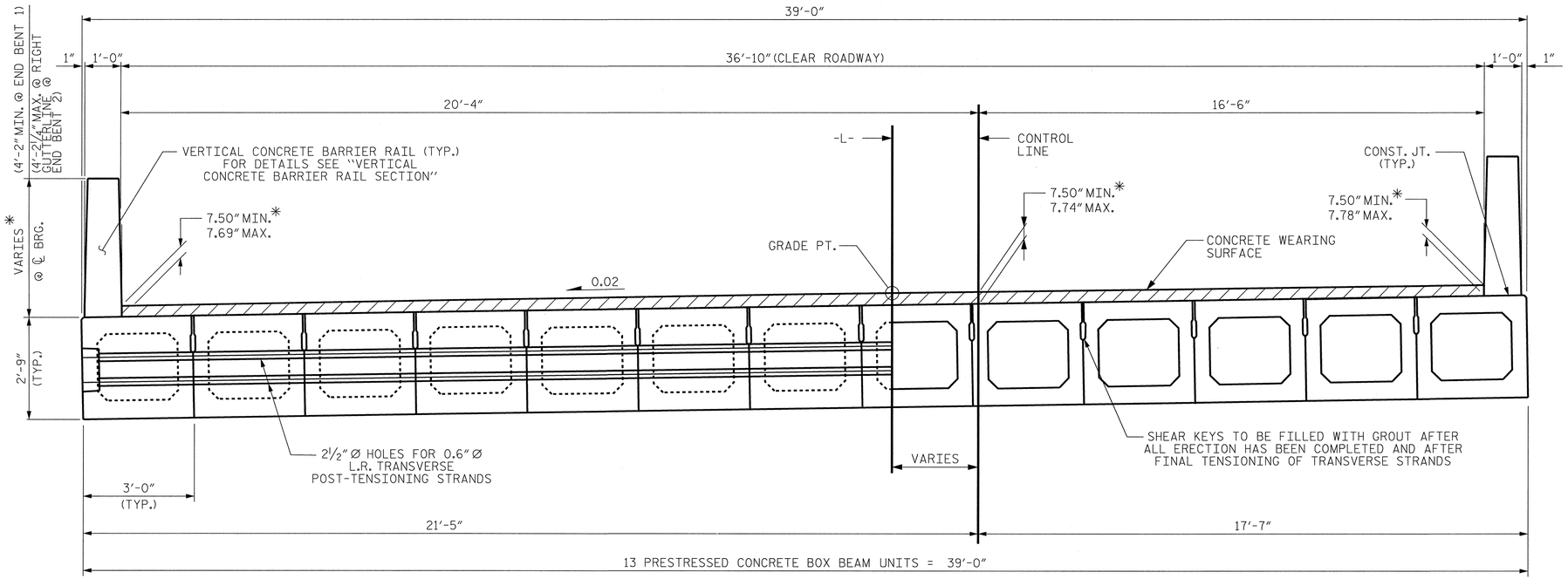

HALF SECTION
AT INTERMEDIATE DIAPHRAGMS

HALF SECTION
THROUGH VOIDS

TYPICAL SECTION

* - THE MAXIMUM AND MINIMUM BARRIER RAIL HEIGHT AND CONCRETE WEARING SURFACE THICKNESS IS SHOWN. THE HEIGHT OF THE BARRIER RAIL AND CONCRETE WEARING SURFACE THICKNESS VARIES WHILE THE TOP OF THE BARRIER RAIL FOLLOWS THE PROFILE OF THE GUTTERLINE. FOR RAIL HEIGHT DETAILS AND CONCRETE WEARING SURFACE THICKNESS, SEE THE "VERTICAL CONCRETE BARRIER RAIL SECTION" DETAIL AND "CONCRETE WEARING SURFACE DEPTH" SHEETS.

FIXED END

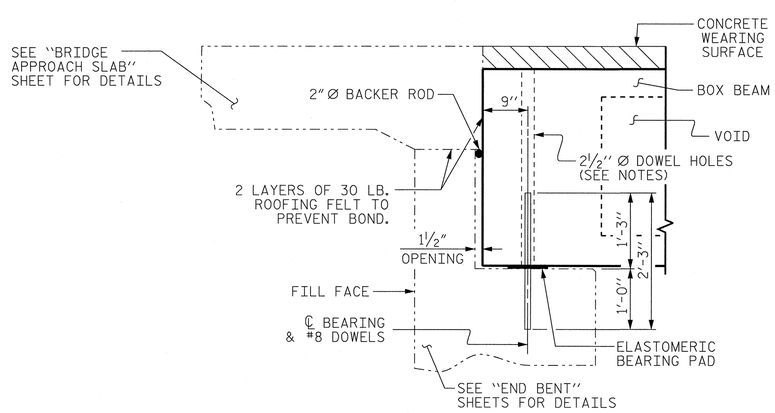

SECTION AT END BENT

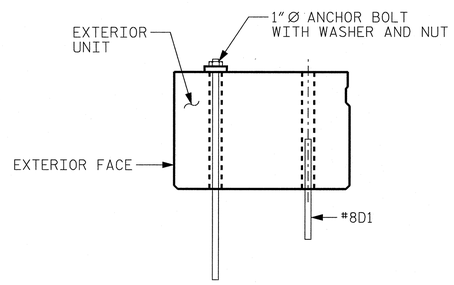

ELEVATION VIEW
(VERTICAL CONCRETE BARRIER NOT SHOWN FOR CLARITY.)

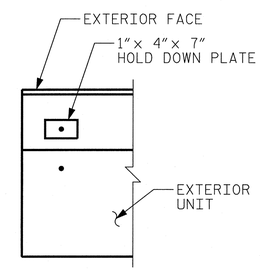

PLAN VIEW

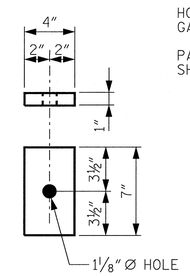

HOLD DOWN PLATE DETAIL

EXTERIOR BOX BEAM ANCHOR DETAILS

NOTES

ALL PRESTRESSING STRANDS SHALL BE 7-WIRE LOW RELAXATION GRADE 270 STRANDS AND SHALL CONFORM TO AASHTO M203 EXCEPT FOR SAMPLING REQUIREMENTS WHICH SHALL BE IN ACCORDANCE WITH THE STANDARD SPECIFICATIONS.

ALL REINFORCING STEEL CAST WITH THE BOX BEAM SECTIONS SHALL BE GRADE 60 AND SHALL BE INCLUDED IN THE UNIT PRICE BID FOR PRESTRESSED CONCRETE BOX BEAMS.

RECESSES FOR TRANSVERSE STRANDS SHALL BE GROUTED AFTER THE TENSIONING OF THE STRANDS.

THE 2½" Ø DOWEL HOLES AT FIXED ENDS OF BOX BEAM SECTIONS SHALL BE FILLED WITH NON-SHRINK GROUT.

THE BACKER RODS SHALL CONFORM TO THE REQUIREMENTS OF TYPE M BOND BREAKER. SEE SECTION 1028 OF THE STANDARD SPECIFICATIONS.

THE TRANSFER OF LOAD FROM THE ANCHORAGES TO THE BOX BEAM UNIT SHALL BE DONE WHEN THE CONCRETE HAS REACHED A COMPRESSIVE STRENGTH OF NOT LESS THAN 6,000 PSI.

ALL REINFORCING STEEL IN VERTICAL CONCRETE BARRIER RAILS SHALL BE EPOXY COATED.

PRESTRESSING STRANDS SHALL BE CUT FLUSH WITH THE BOX BEAM UNIT ENDS.

APPLY EPOXY PROTECTIVE COATING TO BOX BEAM UNIT ENDS.

VERTICAL GROOVED CONTRACTION JOINTS, ½" IN DEPTH, SHALL BE TOOLED IN ALL EXPOSED FACES OF THE BARRIER RAIL AND IN ACCORDANCE WITH ARTICLE 825-10(B) OF THE STANDARD SPECIFICATIONS. A VERTICAL CONTRACTION JOINT SHALL BE LOCATED AT EACH THIRD POINT BETWEEN BARRIER RAIL EXPANSION JOINTS. ONLY ONE CONTRACTION JOINT IS REQUIRED AT MIDPOINT OF BARRIER RAIL SEGMENTS LESS THAN 20 FEET IN LENGTH AND NO CONTRACTION JOINTS ARE REQUIRED FOR THOSE SEGMENTS LESS THAN 10 FEET IN LENGTH.

THE LOCATION OF THE VOID DRAINS MAY BE SHIFTED SLIGHTLY WHERE NECESSARY TO CLEAR PRESTRESSING STRANDS OR TRANSVERSE REINFORCING STEEL.

FOR GROUT FOR STRUCTURES, SEE SPECIAL PROVISIONS.

WHEN A CONCRETE WEARING SURFACE IS DETAILED ON THE BOX BEAM BRIDGE TYPICAL SECTION. THE TOP SURFACE OF THE BOX BEAM UNITS SHALL HAVE A ⅜" RAKED FINISH.

PLACEMENT OF THE CONCRETE WEARING SURFACE SHALL OCCUR AFTER CASTING THE VERTICAL CONCRETE BARRIER RAIL. THE COST OF THE REINFORCING STEEL CAST WITH THE CONCRETE WEARING SURFACE SHALL BE INCLUDED IN THE UNIT PRICE BID FOR CONCRETE WEARING SURFACE. FOR CONCRETE WEARING SURFACE, SEE SPECIAL PROVISION.

BOX BEAM UNITS SHALL BE ANCHORED AT THE CORNERS OF EACH SPAN WITH 1" Ø ANCHOR BOLTS. 2 HOLD DOWNS REQUIRED EACH END BENT.

ANCHOR BOLTS SHALL BE TIGHTENED FINGER TIGHT AND THEN BACKED OFF ½ TURN. THE THREAD OF THE NUT AND BOLT SHALL THEN BE BURRED WITH A SHARP POINTED TOOL.

HOLD DOWN PLATES, ANCHOR BOLTS, NUTS, AND WASHERS SHALL BE GALVANIZED IN ACCORDANCE WITH THE STANDARD SPECIFICATIONS.

PAYMENT FOR HOLD DOWN PLATES, ANCHOR BOLTS, NUTS, AND WASHERS SHALL BE INCLUDED IN THE BOX BEAM PAY ITEM.

PROJECT NO. 17BP.7.R.28
GUILFORD COUNTY
STATION: 12+13.50 -L-

SHEET 1 OF 5 REPLACES BRIDGE #400330

NORTH CAROLINA PROFESSIONAL SEAL 035762 ENGINEER JOSEPH J. PICCIRILLI 03/14/14

Kimley-Horn and Associates, Inc.
333 Fayetteville Street, Suite 600
Raleigh, NC 27601-1772
Phone (919) 835-1494
NC LICENSE # F-0102

This document, together with the concepts and designs presented herein, as an instrument of services, is intended only for the specific purpose and client for which it was prepared. Reuse of and improper reliance of this document without written authorization and adoption by Kimley-Horn and Associates, Inc. shall be without liability to Kimley-Horn and Associates, Inc.
Copyright Kimley-Horn and Associates, Inc., 2014

STATE OF NORTH CAROLINA
DEPARTMENT OF TRANSPORTATION
RALEIGH
STANDARD

3'-0" X 2'-9"
PRESTRESSED CONCRETE
BOX BEAM UNIT

REVISIONS								SHEET NO.
NO.	BY:	DATE:	NO.	BY:	DATE:			S-5
1			3					TOTAL SHEETS
2			4					18

ASSEMBLED BY : JFP	DATE : 3/14	
CHECKED BY : JCW	DATE : 3/14	
DRAWN BY : DGE 8/11		
CHECKED BY : TMG 11/11		

3/14/2014
K:\RDT-Structures_Bridges\NC17BP Bridges - Group EV01\036192.BR400330\Cad\dgn\S-5.dgn

STD. NO. STD.33PCBB1_39

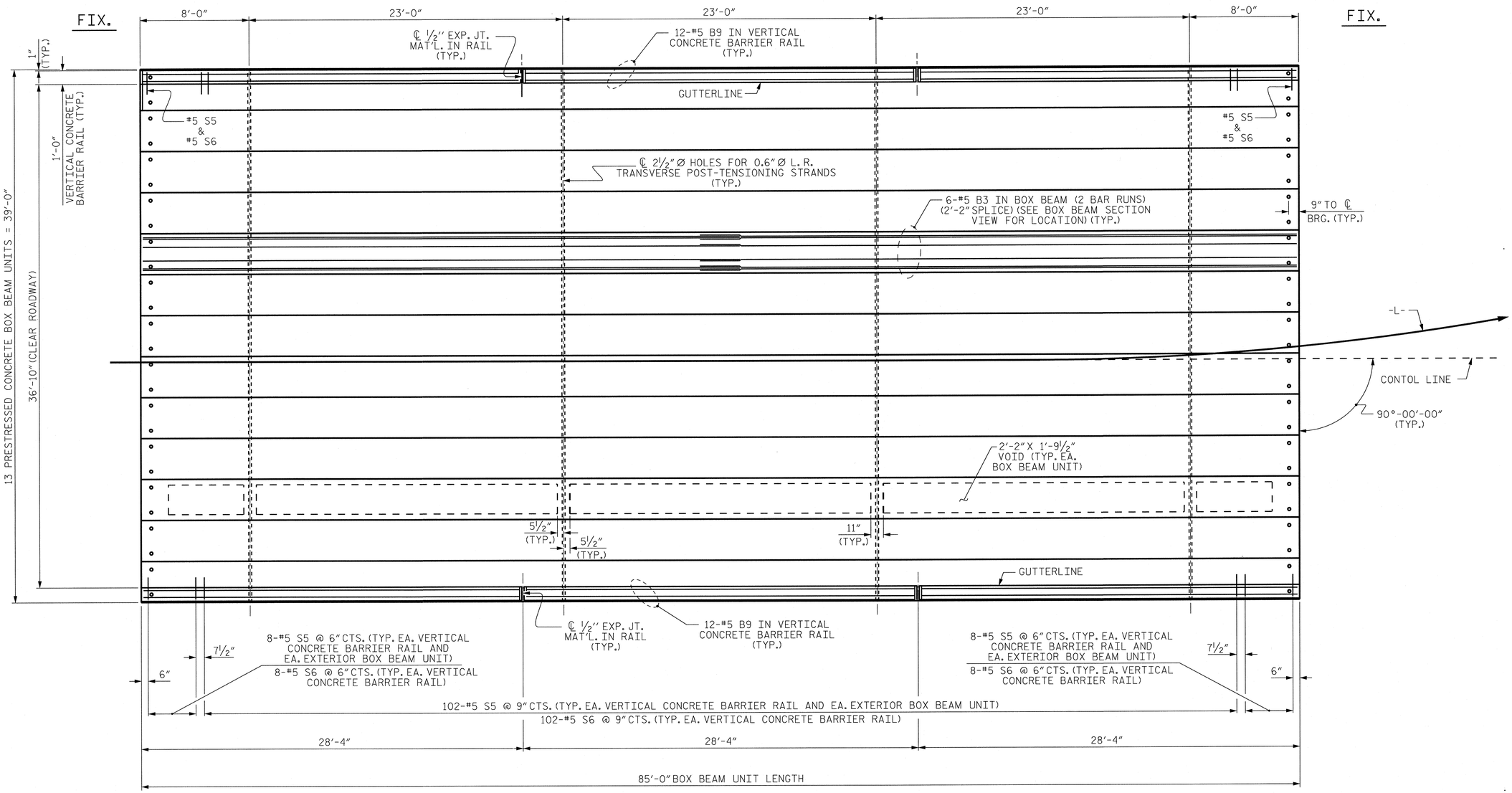

PLAN OF UNIT

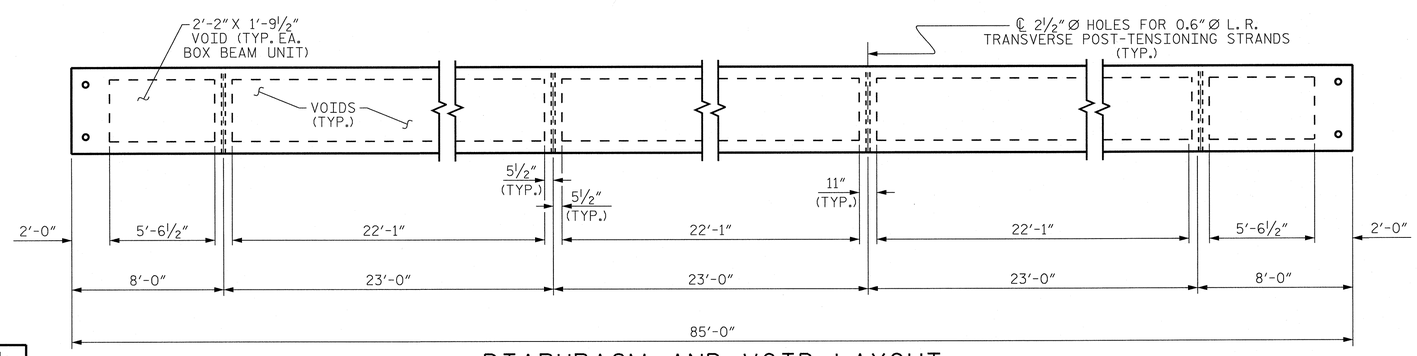

DIAPHRAGM AND VOID LAYOUT

PROJECT NO. 17BP.7.R.28

GUILFORD COUNTY

STATION: 12+13.50 -L-

SHEET 2 OF 5 REPLACES BRIDGE #400330

STATE OF NORTH CAROLINA
DEPARTMENT OF TRANSPORTATION
RALEIGH

STANDARD

PLAN OF 85' UNIT
36'-10" CLEAR ROADWAY
90° SKEW

NORTH CAROLINA PROFESSIONAL SEAL 035762 ENGINEER JOSEPH J. PICCIRILLI 03/14/14

Kimley-Horn and Associates, Inc.
333 Fayetteville Street, Suite 600
Raleigh, NC 27601-1772
Phone (919) 835-1494
NC LICENSE # F-0102

This document, together with the concepts and designs presented herein, as an instrument of service, is intended only for the specific purpose and client for which it was prepared. Reuse of and improper reliance on this document without written authorization and adaptation by Kimley-Horn and Associates, Inc. shall be without liability to Kimley-Horn and Associates, Inc.

Copyright Kimley-Horn and Associates, Inc., 2014

REVISIONS							SHEET NO.
NO.	BY:	DATE:	NO.	BY:	DATE:		S-6
1			3				TOTAL SHEETS
2			4				18

ASSEMBLED BY : JFP	DATE : 3/14
CHECKED BY : JCW	DATE : 3/14
DRAWN BY: DGE 8/11	
CHECKED BY: TMG 11/11	

3/14/2014 K:\RDT Structures_Bridge\NC\17BP Bridges - Group E\01103619Z_BR400330\Cad\dgn\S-6.dgn

STD. NO. 33PCBB_39_90S_85L

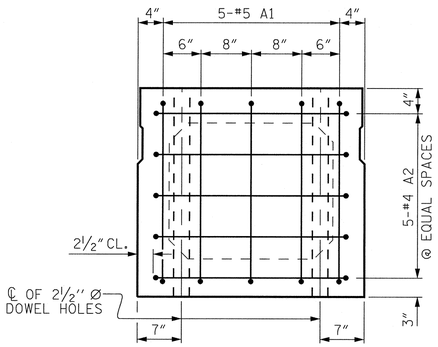

END ELEVATION

SHOWING PLACEMENT OF #5 & #4 "A" BARS AND LOCATION OF DOWEL HOLES. (INTERIOR BOX BEAM SECTION SHOWN-EXTERIOR SECTION SIMILAR EXCEPT SHEAR KEY LOCATION. STRAND LAYOUT NOT SHOWN.)

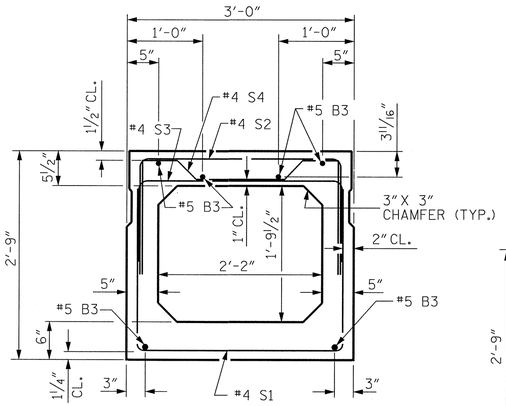

INTERIOR BOX BEAM SECTION

(STRAND LAYOUT NOT SHOWN)

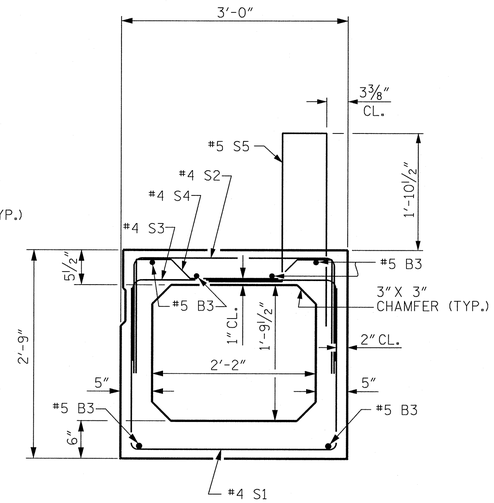

EXTERIOR BOX BEAM SECTION

(STRAND LAYOUT NOT SHOWN)

0.6" Ø LOW RELAXATION STRAND LAYOUT

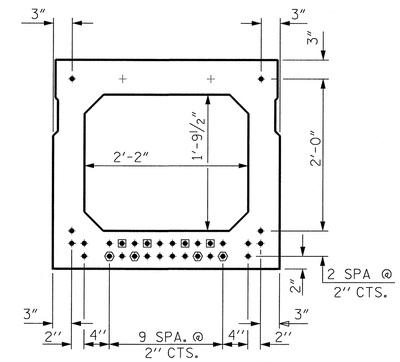

TYPICAL STRAND LOCATION

(30 STRANDS REQUIRED)

DEBONDING LEGEND

- ● FULLY BONDED STRANDS
- ◉ STRANDS DEBONDED FOR 4'-0" FROM END OF GIRDER
- ⬢ STRANDS DEBONDED FOR 12'-0" FROM END OF GIRDER

BOND SHALL BE BROKEN ON STRANDS AS SHOWN FOR THE SPECIFIED LENGTH FROM EACH END OF THE BOX BEAM. SEE STANDARD SPECIFICATIONS ARTICLE 1078-7.

BAR TYPES

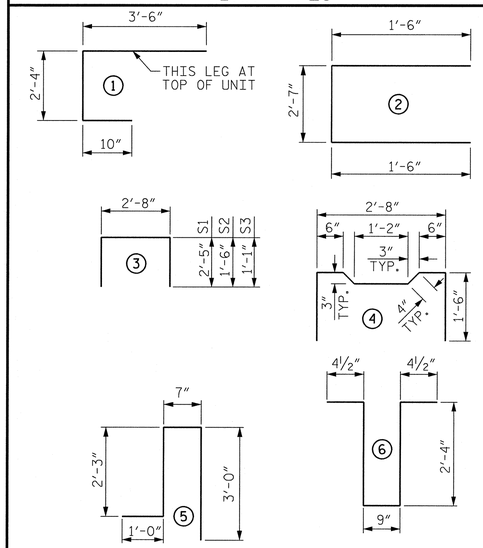

ALL BAR DIMENSIONS ARE OUT TO OUT

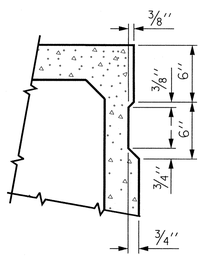

SHEAR KEY DETAIL

NOTE: OMIT SHEAR KEY ON OUTSIDE FACE OF EXTERIOR BOX BEAMS.

GRADE 270 STRANDS	
	0.6" Ø L.R.
AREA (SQUARE INCHES)	0.217
ULTIMATE STRENGTH (LBS. PER STRAND)	58,600
APPLIED PRESTRESS (LBS. PER STRAND)	43,950

BILL OF MATERIAL FOR ONE BOX BEAM SECTION

BAR	NUMBER	SIZE	TYPE	EXTERIOR UNIT LENGTH	EXTERIOR UNIT WEIGHT	INTERIOR UNIT LENGTH	INTERIOR UNIT WEIGHT
A1	10	#5	1	6'-8"	70	6'-8"	70
A2	34	#4	2	5'-7"	127	5'-7"	127
B3	12	#5	STR	43'-5"	543	43'-5"	543
K1	12	#4	6	6'-2"	49	6'-2"	49
K2	8	#4	STR	2'-7"	14	2'-7"	14
S1	71	#4	3	7'-6"	356	7'-6"	356
S2	71	#4	3	5'-8"	269	5'-8"	269
S3	121	#4	3	4'-10"	391	4'-10"	391
S4	50	#4	4	5'-10"	195	5'-10"	195
✳ S5	118	#5	5	6'-10"	841	--	--
REINFORCING STEEL					2014 LBS.		2014 LBS.
✳ EPOXY COATED REINF. STEEL					841 LBS.		
8000 P.S.I. CONCRETE					15.1 CU. YDS.		15.0 CU. YDS.
0.6" Ø L.R. STRANDS					No. 30		No. 30

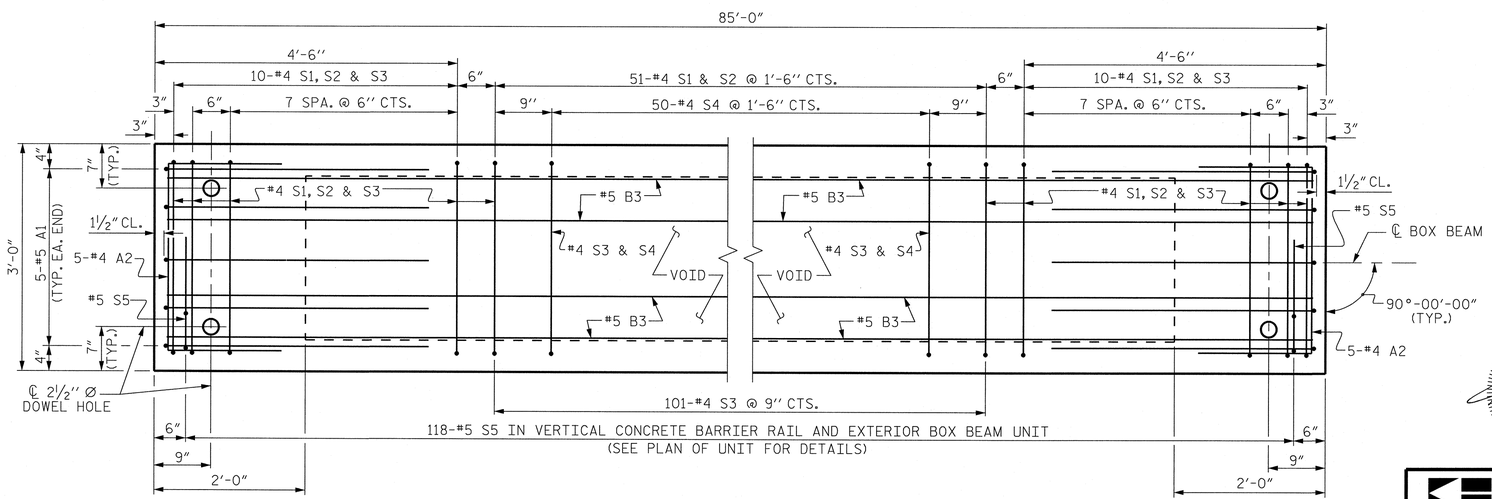

PLAN OF BOX BEAM

EXTERIOR UNIT SHOWN, INTERIOR UNIT SIMILAR EXCEPT OMIT #5 S5 BARS.
FOR LOCATION OF DIAPHRAGMS, SEE PLAN OF UNIT.
FOR REINFORCING STEEL IN DIAPHRAGMS, SEE DIAPHRAGM DETAILS.

PROJECT NO. 17BP.7.R.28
GUILFORD COUNTY
STATION: 12+13.50 -L-

SHEET 3 OF 5 REPLACES BRIDGE #400330

NORTH CAROLINA PROFESSIONAL SEAL 035762 ENGINEER JOSEPH J. PICCIRILLI 03/14/14

Kimley-Horn and Associates, Inc.
333 Fayetteville Street, Suite 600
Raleigh, NC 27601-1772
Phone (919) 835-1494
NC LICENSE # F-0102

This document, together with the concepts and designs presented herein, as an instrument of services, is intended only for the specific purpose and client for which it was prepared. Reuse of and improper reliance on this document without written authorization and adaption by Kimley-Horn and Associates, Inc. shall be without liability to Kimley-Horn and Associates, Inc.
Copyright Kimley-Horn and Associates, Inc., 2014

STATE OF NORTH CAROLINA
DEPARTMENT OF TRANSPORTATION
RALEIGH

STANDARD

3'-0" X 2'-9" PRESTRESSED CONCRETE BOX BEAM UNIT

REVISIONS						SHEET NO.
NO.	BY:	DATE:	NO.	BY:	DATE:	S-7
1			3			TOTAL SHEETS
2			4			18

ASSEMBLED BY : JFP	DATE : 3/14
CHECKED BY : JCW	DATE : 3/14
DRAWN BY : DGE 10/11	
CHECKED BY : TMG 11/11	

3/14/2014

K:\RDT_Structures_Bridge\NC\17BP Bridges - Group E\01036192_BR400330\Cad\dgn\S-7.dgn

STD. NO. 33PCBB4_90S_85L

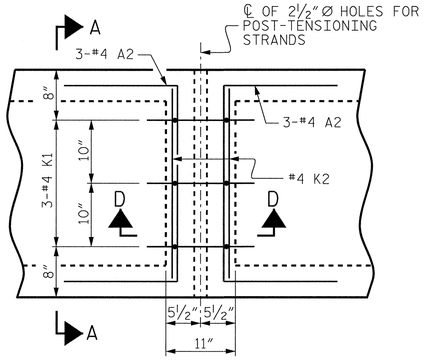

PLAN

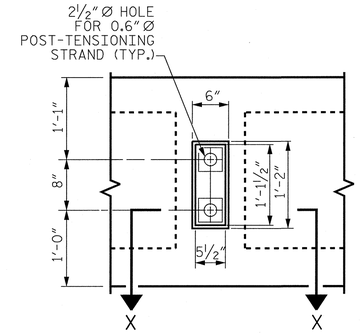

VIEW Y-Y

SHOWING ELEVATION VIEW OF GROUTED RECESS

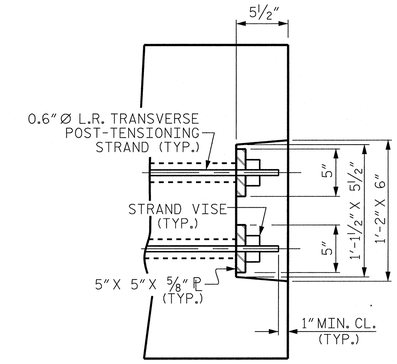

DETAIL "C"

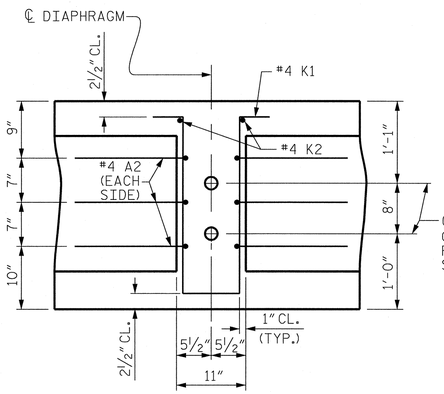

SECTION D-D

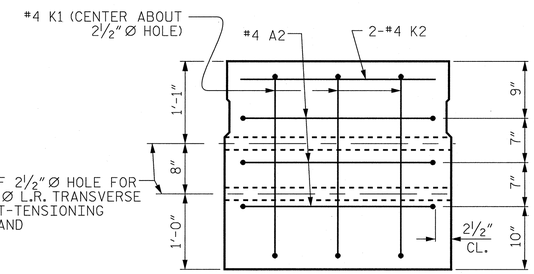

SECTION A-A

VOIDS NOT SHOWN

DOUBLE DIAPHRAGM DETAILS

#4 "S" BARS NOT SHOWN. #4 "S" BARS MAY BE SHIFTED SLIGHTLY TO CLEAR 2" Ø HOLE.

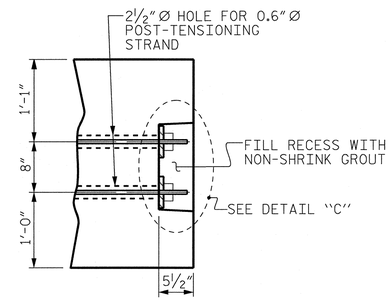

PART SECTION AT RECESS

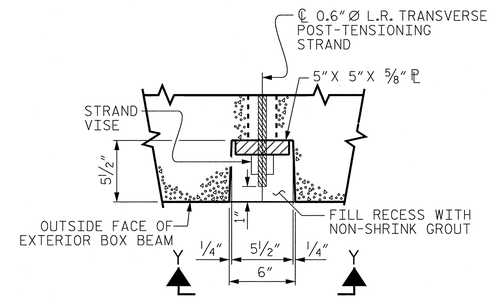

SECTION X-X

SHOWING PLAN VIEW OF GROUTED RECESS

GROUTED RECESS DETAIL AT END OF POST-TENSIONED STRANDS OF EXTERIOR BOX BEAM

DEAD LOAD DEFLECTION AND CAMBER	
	3'-0" x 2'-9"
85' BOX BEAM UNIT	0.6"Ø L.R. STRAND
CAMBER (SLAB ALONE IN PLACE)	4 7/16" ↑
DEFLECTION DUE TO SUPERIMPOSED DEAD LOAD	½" ↓
FINAL CAMBER	3 15/16" ↑

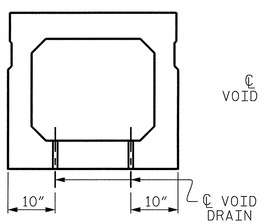

SECTION B-B

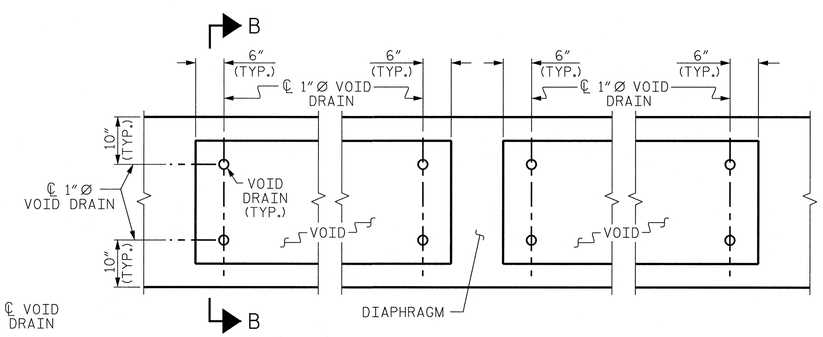

PART PLAN

VOID DRAIN DETAILS

(DIMENSIONS SHOWN ARE TYPICAL FOR EACH VOID)

PROJECT NO. 17BP.7.R.28

GUILFORD COUNTY

STATION: 12+13.50 -L-

SHEET 4 OF 5 REPLACES BRIDGE #400330

STATE OF NORTH CAROLINA
DEPARTMENT OF TRANSPORTATION
RALEIGH

STANDARD

3'-0" X 2'-9"
PRESTRESSED CONCRETE
BOX BEAM UNIT

NORTH CAROLINA PROFESSIONAL SEAL 035762 ENGINEER JOSEPH J. PICCIRILLI 03/14/14

Kimley-Horn and Associates, Inc.
333 Fayetteville Street, Suite 600
Raleigh, NC 27601-1772
Phone (919) 835-1494
NC LICENSE # F-0102

This document, together with the concepts and designs presented herein, as an instrument of service, is intended only for the specific purpose and client for which it was prepared. Reuse of and improper reliance on this document without written authorization and adaption by Kimley-Horn and Associates, Inc. shall be without liability to Kimley-Horn and Associates, Inc.

Copyright Kimley-Horn and Associates, Inc., 2014

REVISIONS							
NO.	BY:	DATE:	NO.	BY:	DATE:		
1			3				
2			4				

SHEET NO. S-8

TOTAL SHEETS 18

ASSEMBLED BY : JFP		DATE :	3/14
CHECKED BY : JCW		DATE :	3/14
DRAWN BY : DGE	10/11		
CHECKED BY : TMG	11/11		

3/14/2014

K:\RDT_Structures_Bridges\NC\17BP Bridges - Group EV01\036192_BR400330\Cad\dgn\S-8.dgn

STD.NO.33PCBB5_90S

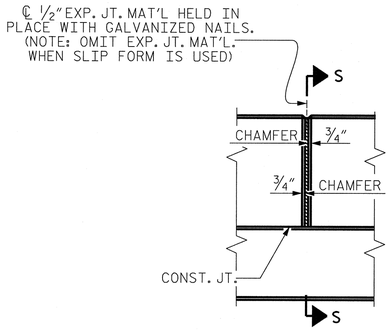

ELEVATION AT EXPANSION JOINTS

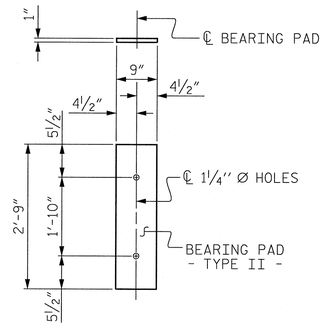

FIXED END
(TYPE II - 26 REQ'D)

ELASTOMERIC BEARING DETAILS

ELASTOMER IN ALL BEARINGS SHALL BE 60 DUROMETER HARDNESS.

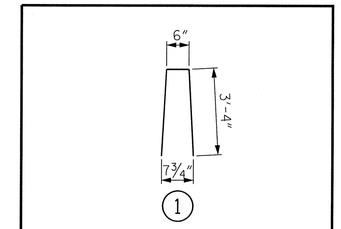

BAR TYPE
BAR DIMENSIONS ARE OUT TO OUT

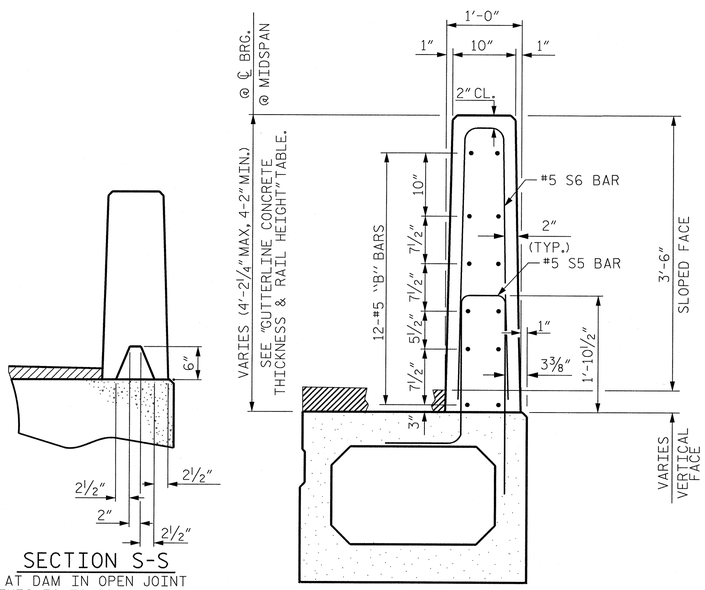

SECTION S-S
AT DAM IN OPEN JOINT
(THIS IS TO BE USED ONLY WHEN SLIP FORM IS USED)

SECTION THRU RAIL

VERTICAL CONCRETE BARRIER RAIL DETAILS

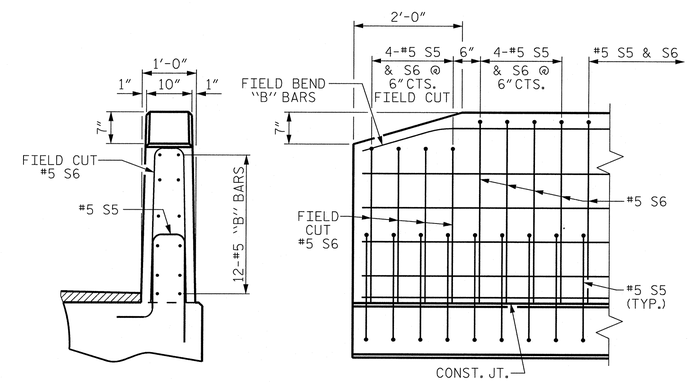

END VIEW

SIDE VIEW

END OF RAIL DETAILS

BOX BEAM UNITS REQUIRED			
	NUMBER	LENGTH	TOTAL LENGTH
EXTERIOR B.B.	2	85'-0"	170'-0"
INTERIOR B.B.	11	85'-0"	935'-0"
TOTAL	13	———	1105'-0"

BILL OF MATERIAL FOR VERTICAL CONCRETE BARRIER RAIL					
BAR	BARS PER PAIR OF EXTERIOR UNITS	SIZE	TYPE	LENGTH	WEIGHT
	85' UNIT				
✳ B9	72	#5	STR	27'-11"	2096
✳ S6	236	#5	1	7'-2"	1764
✳ EPOXY COATED REINFORCING STEEL			LBS.		3860
CLASS AA CONCRETE			CU.YDS.		27.3
TOTAL VERTICAL CONCRETE BARRIER RAIL			LN. FT.		170.0

GUTTERLINE CONCRETE THICKNESS & RAIL HEIGHT		
	CONCRETE OVERLAY THICKNESS @ MID-SPAN	RAIL HEIGHT @ MID-SPAN
85' UNIT	3 1/2"	3'-10"

PROJECT NO. 17BP.7.R.28
GUILFORD COUNTY
STATION: 12+13.50 -L-

SHEET 5 OF 5 REPLACES BRIDGE #400330

NORTH CAROLINA PROFESSIONAL SEAL 035762 ENGINEER JOSEPH J. PICCIRILLI 03/14/14

Kimley-Horn and Associates, Inc.
333 Fayetteville Street, Suite 600
Raleigh, NC 27601-1772
Phone (919) 835-1494
NC LICENSE # F-0102

This document, together with the concepts and designs presented herein, as an instrument of service, is intended only for the specific purpose and client for which it was prepared. Reuse of and improper reliance on this document without written authorization and adaption by Kimley-Horn and Associates, Inc. shall be without liability to Kimley-Horn and Associates, Inc.
Copyright Kimley-Horn and Associates, Inc., 2014

STATE OF NORTH CAROLINA
DEPARTMENT OF TRANSPORTATION
RALEIGH

STANDARD

3'-0" X 2'-9"
PRESTRESSED CONCRETE
BOX BEAM UNIT

REVISIONS						SHEET NO.
NO.	BY:	DATE:	NO.	BY:	DATE:	S-9
1			3			TOTAL SHEETS
2			4			18

ASSEMBLED BY : JFP	DATE : 3/14
CHECKED BY : JCW	DATE : 3/14
DRAWN BY : DGE 10/11	
CHECKED BY : TMG 11/11	

3/14/2014 K:\RDT_Structures_Bridges\NC\17BP Bridges - Group EX\01036192_BR400330\Cad\dgn\S-9.dgn

STD. NO. 33PCBB8_90S

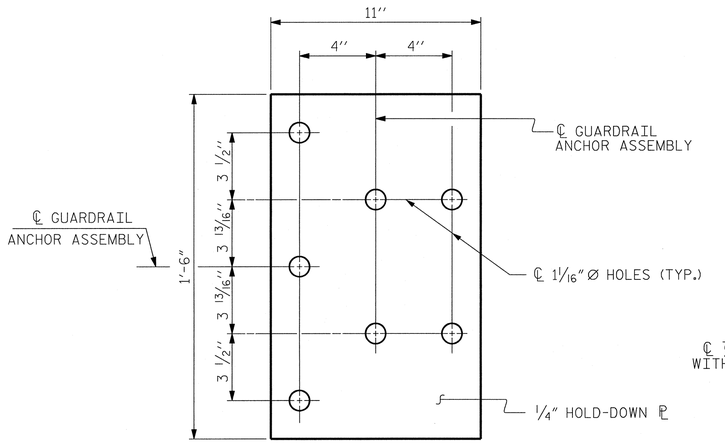

PLAN

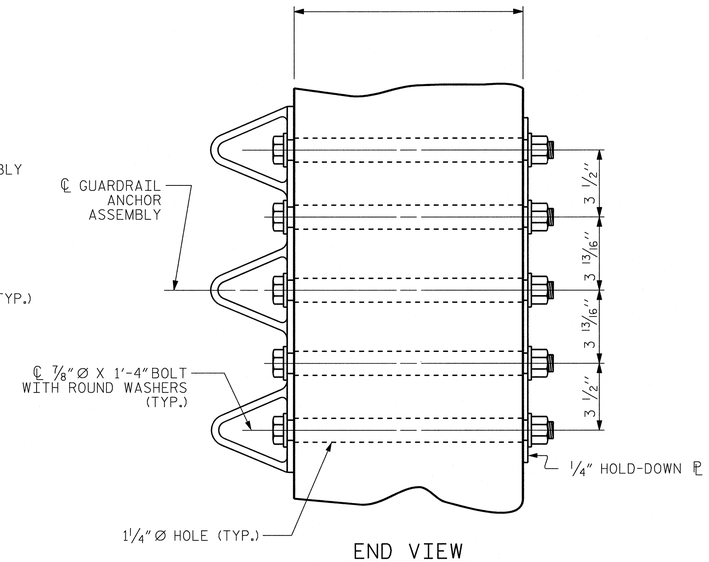

END VIEW

GUARDRAIL ANCHOR ASSEMBLY DETAILS

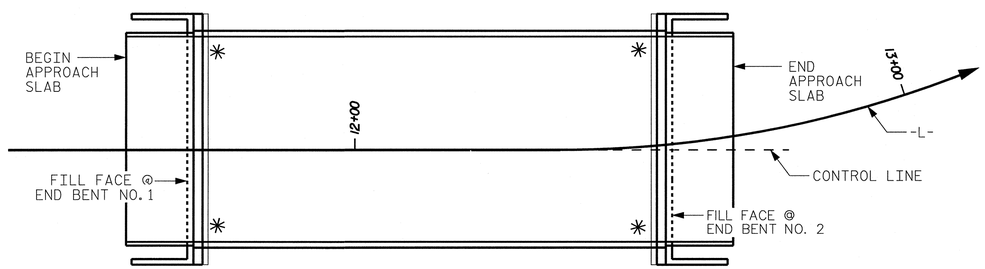

SKETCH SHOWING POINTS OF ATTACHMENT

✳ LOCATION OF GUARDRAIL ATTACHMENT

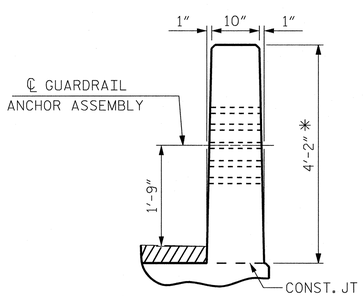

END VIEW

(VERTICAL CONCRETE BARRIER RAIL)

✳ BASED ON 7 1/2" WEARING SURFACE

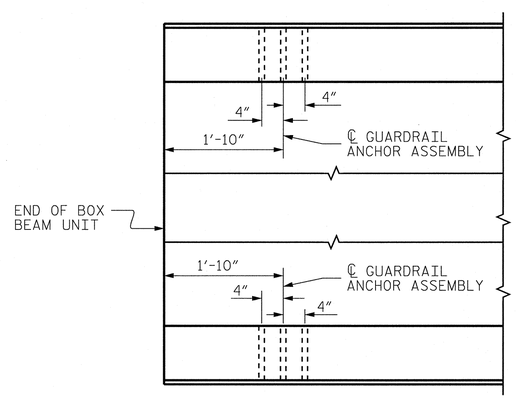

PLAN

(END BENT 1 SHOWN, END BENT 2 SIMILAR)

LOCATION OF GUARDRAIL ANCHOR AT END POST

NOTES

THE GUARDRAIL ANCHOR ASSEMBLY SHALL CONSIST OF A 1/4'' HOLD DOWN PLATE AND 7 - 7/8'' Ø BOLTS WITH NUTS AND WASHERS.

THE HOLD-DOWN PLATE SHALL CONFORM TO AASHTO M270 GRADE 36. AFTER FABRICATION, THE HOLD-DOWN PLATE SHALL BE HOT-DIP GALVANIZED IN ACCORDANCE WITH AASHTO M111.

BOLTS SHALL CONFORM TO THE REQUIREMENTS OF ASTM A307 AND NUTS SHALL CONFORM TO THE REQUIREMENTS OF AASHTO M291. BOLTS, NUTS AND WASHERS SHALL BE GALVANIZED. (AT THE CONTRACTOR'S OPTION, STAINLESS STEEL BOLTS, NUTS AND WASHERS MAY BE USED AS AN ALTERNATE FOR THE 7/8'' Ø GALVANIZED BOLTS, NUTS AND WASHERS. THEY SHALL CONFORM TO OR EXCEED THE MECHANICAL REQUIREMENTS OF ASTM A307. THE USE OF THIS ALTERNATE SHALL BE APPROVED BY THE ENGINEER.)

THE GUARDRAIL ANCHOR ASSEMBLY IS REQUIRED AT ALL POINTS WHERE APPROACH GUARDRAIL IS TO BE ATTACHED TO THE END OF BARRIER RAIL. FOR POINTS OF ATTACHMENT, SEE SKETCH.

AFTER INSTALLATION, THE EXPOSED THREAD OF THE BOLT SHALL BE BURRED WITH A SHARP POINTED TOOL.

THE COST OF THE GUARDRAIL ANCHOR ASSEMBLY SHALL BE INCLUDED IN THE UNIT CONTRACT PRICE BID FOR VERTICAL CONCRETE BARRIER RAIL.

THE VERTICAL REINFORCING BARS MAY BE SHIFTED SLIGHTLY IN THE VERTICAL CONCRETE BARRIER RAIL TO CLEAR ASSEMBLY BOLTS.

THE 1 1/4'' Ø HOLES SHALL BE FORMED OR DRILLED WITH A CORE BIT. IMPACT TOOLS WILL NOT BE PERMITTED. ANY CONCRETE DAMAGED BY THIS WORK SHALL BE REPAIRED TO THE SATISFACTION OF THE ENGINEER.

PROJECT NO. 17BP.7.R.28

GUILFORD COUNTY

STATION: 12+13.50 -L-

REPLACES BRIDGE #400330

NORTH CAROLINA PROFESSIONAL SEAL 035762 ENGINEER JOSEPH J. PICCIRILLI 03/14/14

Kimley-Horn and Associates, Inc.
333 Fayetteville Street, Suite 600
Raleigh, NC 27601-1772
Phone (919) 835-1494
NC LICENSE # F-0102

This document, together with the concepts and designs presented herein, as an instrument of service, is intended only for the specific purpose and client for which it was prepared. Reuse of and improper reliance on this document without written authorization and adaptation by Kimley-Horn and Associates, Inc. shall be without liability to Kimley-Horn and Associates, Inc.

Copyright Kimley-Horn and Associates, Inc., 2014

STATE OF NORTH CAROLINA
DEPARTMENT OF TRANSPORTATION
RALEIGH

STANDARD

GUARDRAIL ANCHORAGE DETAILS FOR METAL RAILS & VERTICAL CONCRETE BARRIER RAIL

REVISIONS						SHEET NO.
NO.	BY:	DATE:	NO.	BY:	DATE:	S-10
1			3			TOTAL SHEETS
2			4			18

STD. NO. GRA3

ASSEMBLED BY : JFP		DATE :	3/14
CHECKED BY : JCW		DATE :	3/14
DRAWN BY: MAA 5/10	REV: 10/1/11		MAA/GM
CHECKED BY : GM 5/10	REV: 12/5/11		MAA/GM
	REV: 6/13		MAA/GM

3/14/2014

K:\RDT-Structures_Bridges\NC\17BP Bridges - Group EV01\036192.BR400330\Cad\dgn\S-10.dgn

SPAN A

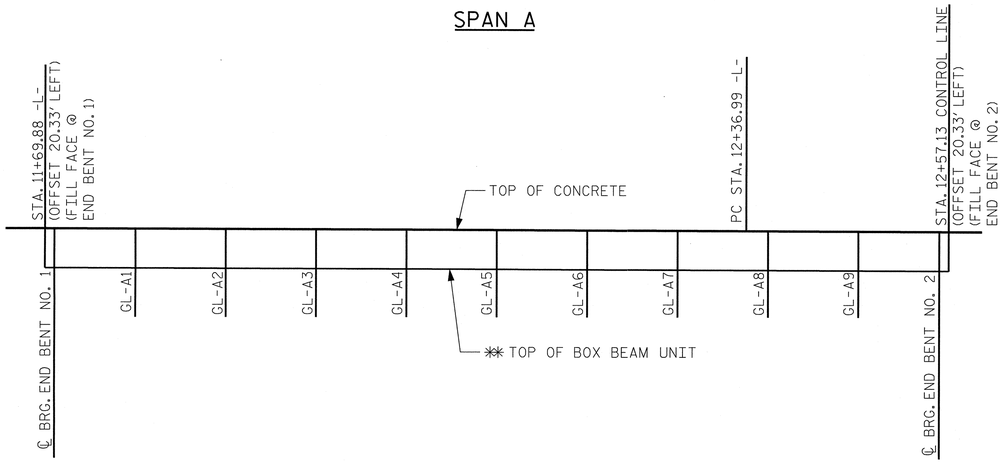

CONCRETE DEPTH ALONG LEFT GUTTERLINE

CONCRETE DEPTH ALONG LEFT GUTTERLINE					
POINT	STATION ALONG -L-	OFFSET	PGL ELEV. ALONG -L-	POI ELEV.	CONCRETE DEPTH (IN)✱
FF EB1	11+69.88	20.33 (LT)	780.45	780.04	7.50
CL BRG EB1	11+71.76	20.33 (LT)	780.44	780.04	7.50
GL-A1	11+78.61	20.33 (LT)	780.42	780.02	7.50
GL-A2	11+87.33	20.33 (LT)	780.40	779.99	7.50
GL-A3	11+96.06	20.33 (LT)	780.37	779.97	7.50
GL-A4	12+04.78	20.33 (LT)	780.35	779.94	7.50
GL-A5	12+13.05	20.33 (LT)	780.32	779.91	7.50
GL-A6	12+22.23	20.33 (LT)	780.29	779.89	7.50
GL-A7	12+30.96	20.33 (LT)	780.27	779.86	7.50
GL-A8	12+39.98	20.31 (LT)	780.24	779.83	7.49
GL-A9	12+49.68	19.97 (LT)	780.21	779.81	7.54
CL BRG EB2	12+57.25	19.41 (LT)	780.19	779.80	7.65
FF EB2	12+59.32	19.21 (LT)	780.18	779.80	7.69

✱ CONCRETE DEPTHS SHOWN HAVE NOT BEEN ADJUSTED FOR BOX BEAM CAMBER.

CONCRETE DEPTH ALONG RIGHT GUTTERLINE					
POINT	STATION ALONG -L-	OFFSET	PGL ELEV. ALONG -L-	POI ELEV.	CONCRETE DEPTH (IN)✱
FF EB1	**1169.88**	16.50 (RT)	780.45	780.78	7.50
CL BRG EB1	**1171.76**	16.50 (RT)	780.44	780.77	7.50
GR-A1	**1178.61**	16.50 (RT)	780.42	780.75	7.50
GR-A2	**1187.33**	16.50 (RT)	780.40	780.73	7.50
GR-A3	**1196.06**	16.50 (RT)	780.37	780.70	7.50
GR-A4	**1204.78**	16.50 (RT)	780.35	780.68	7.50
GR-A5	**1213.05**	16.50 (RT)	780.32	780.65	7.50
GR-A6	**1222.23**	16.50 (RT)	780.29	780.62	7.50
GR-A7	**1230.96**	16.50 (RT)	780.27	780.60	7.50
GR-A8	**1239.47**	16.52 (RT)	780.24	780.57	7.51
GR-A9	**1247.53**	16.80 (RT)	780.22	780.55	7.60
CL BRG EB2	**1253.82**	17.27 (RT)	780.20	780.54	7.73
FF EB2	**1255.54**	17.43 (RT)	780.19	780.54	7.78

✱ CONCRETE DEPTHS SHOWN HAVE NOT BEEN ADJUSTED FOR BOX BEAM CAMBER.

SPAN A

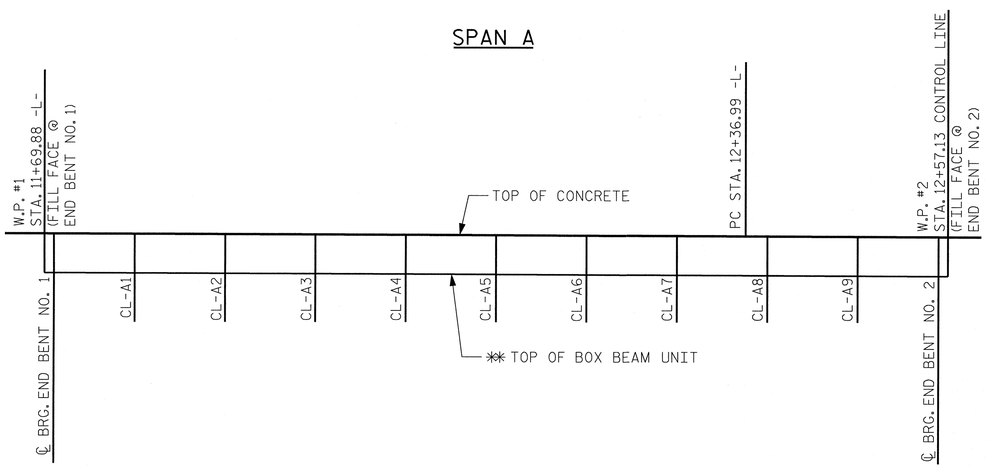

CONCRETE DEPTH ALONG CONTROL LINE

CONCRETE DEPTH ALONG CONTROL LINE					
POINT	STATION ALONG -L-	OFFSET	PGL ELEV. ALONG -L-	POI ELEV.	CONCRETE DEPTH (IN)✱
FF EB1	11+69.88	0.00	780.45	780.45	7.50
CL BRG EB1	11+71.76	0.00	780.44	780.44	7.50
CL-A1	11+78.61	0.00	780.42	780.42	7.50
CL-A2	11+87.33	0.00	780.40	780.40	7.50
CL-A3	11+96.06	0.00	780.37	780.37	7.50
CL-A4	12+04.78	0.00	780.35	780.35	7.50
CL-A5	12+13.05	0.00	780.32	780.32	7.50
CL-A6	12+22.23	0.00	780.29	780.29	7.50
CL-A7	12+30.96	0.00	780.27	780.27	7.50
CL-A8	12+39.68	0.01 (RT)	780.24	780.24	7.50
CL-A9	12+48.39	0.33 (RT)	780.21	780.22	7.58
CL BRG EB2	12+55.20	0.83 (RT)	780.19	780.21	7.70
FF EB2	12+57.06	1.01 (RT)	780.19	780.21	7.74

✱ CONCRETE DEPTHS SHOWN HAVE NOT BEEN ADJUSTED FOR BOX BEAM CAMBER.

SPAN A

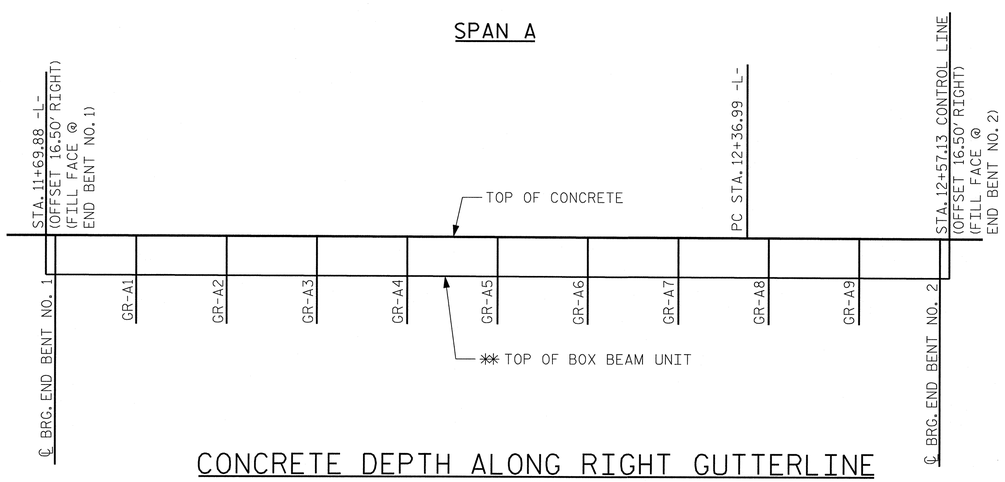

CONCRETE DEPTH ALONG RIGHT GUTTERLINE

✱✱ TOP OF BOX BEAM UNIT IS SHOWN AS A STRAIGHT LINE FROM BEARING TO BEARING

PROJECT NO. 17BP.7.R.28
GUILFORD COUNTY
STATION: 12+13.50 -L-

SHEET 1 OF 2 REPLACES BRIDGE #400330

NORTH CAROLINA PROFESSIONAL SEAL 035762 ENGINEER JOSEPH J. PICCIRILLI 03/14/14

Kimley-Horn and Associates, Inc.
333 Fayetteville Street, Suite 600
Raleigh, NC 27601-1772
Phone (919) 835-1494
NC LICENSE # F-0102

This document, together with the concepts and designs presented herein, as an instrument of services, is intended only for the specific purpose and client for which it was prepared. Reuse of and improper reliance on this document without written authorization and adaption by Kimley-Horn and Associates, Inc. shall be without liability to Kimley-Horn and Associates, Inc.
Copyright Kimley-Horn and Associates, Inc., 2014

STATE OF NORTH CAROLINA
DEPARTMENT OF TRANSPORTATION
RALEIGH

CONCRETE WEARING SURFACE DEPTH

REVISIONS						SHEET NO.
NO.	BY:	DATE:	NO.	BY:	DATE:	S-11
1			3			TOTAL SHEETS
2			4			18

DRAWN BY: JFP DATE: 3/14
CHECKED BY: JCW DATE: 3/14

3/14/2014 K:\RDT_Structures_Bridge\NC\17BP Bridges - Group E\01036192-BR400330\Cad\dgn\S-11.dgn

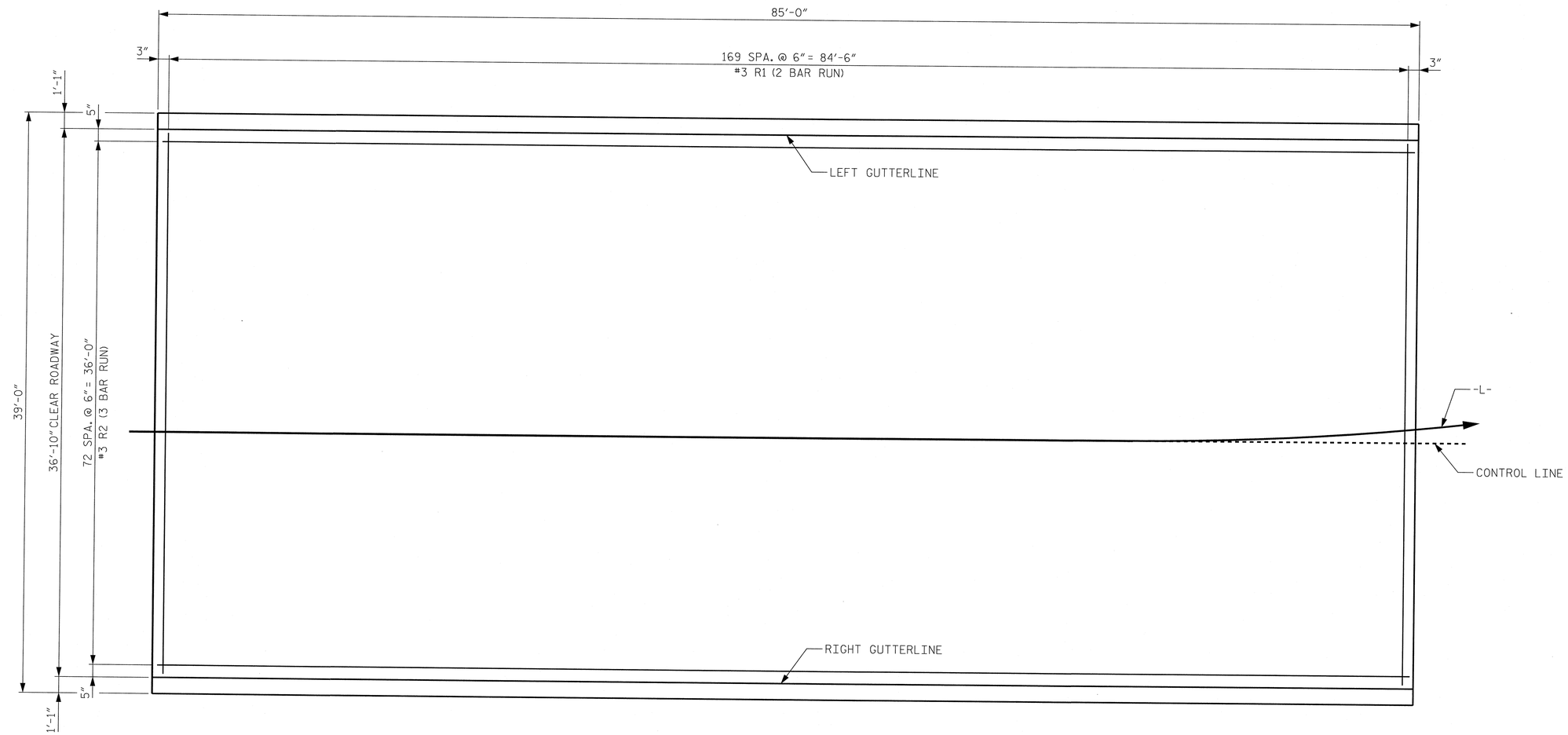

CONCRETE WEARING SURFACE PLAN

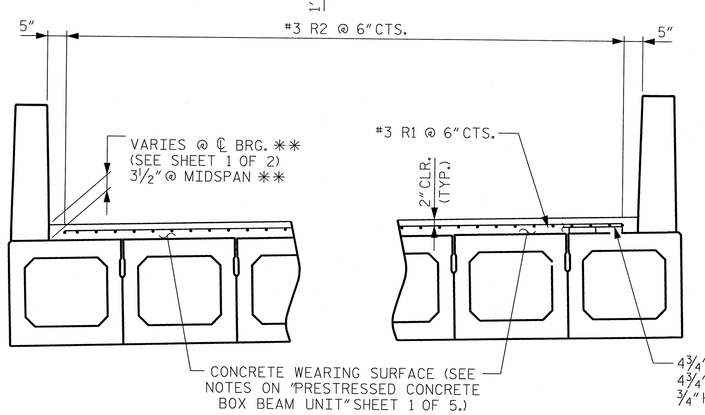

CONCRETE WEARING SURFACE TYPICAL SECTION

** BASED ON PREDICTED FINAL CAMBER.

*** BEAM BOLSTERS (B.B.) SHALL BE SPACED AT 2'-0" CENTERS SET 1'-0" FROM GUTTERLINE.

BILL OF MATERIAL FOR CONCRETE WEARING SURFACE

BAR	NUMBER	SIZE	TYPE	LENGTH	WEIGHT
* R1	340	#3	STR	19'-0"	2,429
* R2	219	#3	STR	29'-3"	2,409
* EPOXY COATED REINFORCING STEEL				LBS.	4,838
CONCRETE WEARING SURFACE				SQ. FT.	3,131

GROOVING BRIDGE FLOORS

APPROACH SLABS	821	SQ.FT.
BRIDGE DECK	2,876	SQ.FT.
TOTAL	3,697	SQ.FT.

SPLICE LENGTH CHART

BAR SIZE	EPOXY COATED
#3	1'-6"

PROJECT NO. 17BP.7.R.28

GUILFORD COUNTY

STATION: 12+13.50 -L-

SHEET 2 OF 2 REPLACES BRIDGE #400330

STATE OF NORTH CAROLINA
DEPARTMENT OF TRANSPORTATION
RALEIGH

CONCRETE WEARING SURFACE DETAILS

NORTH CAROLINA PROFESSIONAL SEAL 035762 ENGINEER JOSEPH J. PICCIRILLI 03/14/14

Kimley-Horn and Associates, Inc.
333 Fayetteville Street, Suite 600
Raleigh, NC 27601-1772
Phone (919) 835-1494
NC LICENSE # F-0102

This document, together with the concepts and designs presented herein, as an instrument of service, is intended only for the specific purpose and client for which it was prepared. Reuse of and improper reliance on this document without written authorization and adaption by Kimley-Horn and Associates, Inc. shall be without liability to Kimley-Horn and Associates, Inc.

Copyright Kimley-Horn and Associates, Inc., 2014

REVISIONS						
NO.	BY:	DATE:	NO.	BY:	DATE:	
1			3			
2			4			

SHEET NO. S-12

TOTAL SHEETS 18

DRAWN BY: JFP DATE: 3/14
CHECKED BY: JCW DATE: 3/14

3/14/2014 K:\RDT_Structures_Bridges\NC\17BP Bridges - Group E\01036192_BR400330\Cad\dgn\S-12.dgn

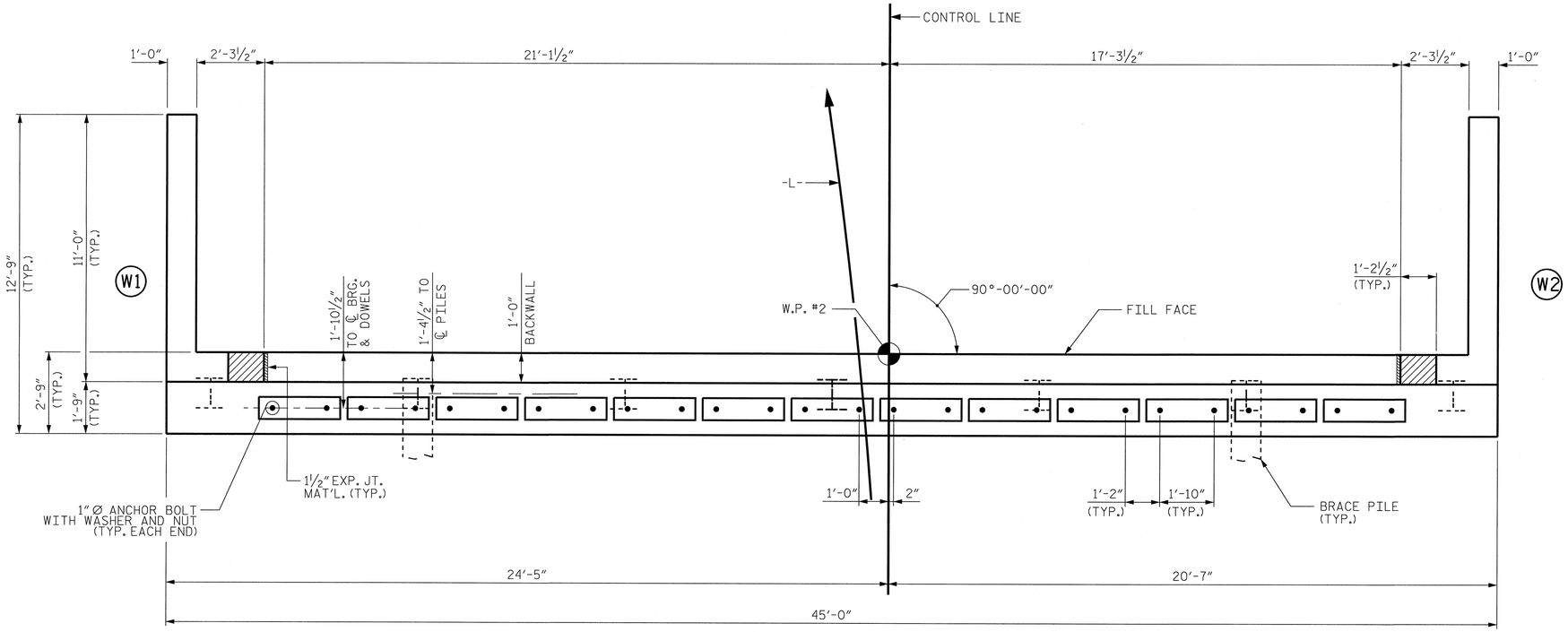

PLAN

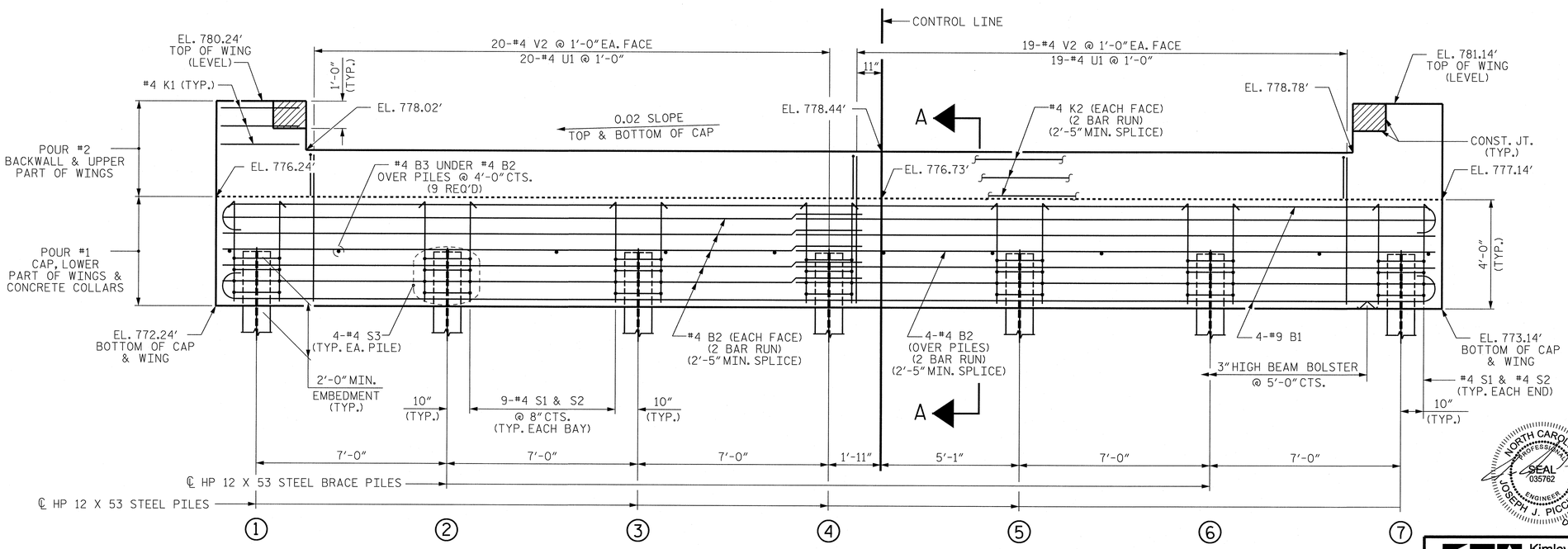

ELEVATION

WINGS NOT SHOWN FOR CLARITY.
FOR SECTION A-A, SEE SHEET 4 OF 4.
CONCRETE COLLARS FOR STEEL PILES NOT SHOWN IN PLAN AND ELEVATION VIEWS FOR CLARITY.
SEE "CORROSION PROTECTION FOR STEEL PILES DETAIL", SHEET 4 OF 4.

NOTES

STIRRUPS IN CAP MAY BE SHIFTED AS NECESSARY TO CLEAR DOWELS.

THE CONCRETE IN THE SHADED AREA OF THE WING SHALL BE POURED AFTER THE VERTICAL CONCRETE BARRIER RAIL IS CAST IF SLIP FORMING IS USED.

FOR PILE SPLICE DETAILS, SEE SHEET 4 OF 4.

FOR WING DETAILS, SEE SHEET 3 OF 4.

TOP OF PILE ELEVATIONS	
1	774.27'
2	774.41'
3	774.55'
4	774.69'
5	774.83'
6	774.97'
7	775.11'

PROJECT NO. 17BP.7.R.28
GUILFORD COUNTY
STATION: 12+13.50 -L-

SHEET 2 OF 4 REPLACES BRIDGE #400330

STATE OF NORTH CAROLINA
DEPARTMENT OF TRANSPORTATION
RALEIGH

SUBSTRUCTURE

END BENT No. 2

NORTH CAROLINA PROFESSIONAL SEAL 035762 ENGINEER JOSEPH J. PICCIRILLI 09/14/14

Kimley-Horn and Associates, Inc.
333 Fayetteville Street, Suite 600
Raleigh, NC 27601-1772
Phone (919) 835-1494
NC LICENSE # F-0102

This document, together with the concepts and designs presented herein, as an instrument of service is intended only for the specific purpose and client for which it was prepared. Reuse of and improper reliance on this document without written authorization and adoption by Kimley-Horn and Associates, Inc. shall be without liability to Kimley-Horn and Associates, Inc.
Copyright Kimley-Horn and Associates, Inc., 2014

ASSEMBLED BY : JFP	DATE : 3/14		
CHECKED BY : JCW	DATE : 3/14		
DRAWN BY : WJH	12/11		
CHECKED BY : AAC	12/11		

REVISIONS						SHEET NO.
NO.	BY:	DATE:	NO.	BY:	DATE:	S-14
1			3			TOTAL SHEETS
2			4			18

STD. NO. EB_39_90S4_39BB

K:\RDT_Structures_Bridge\NC\17BP Bridges - Group E\01103619Z_BR400330\Cad\dgn\S-14.dgn
3/14/2014

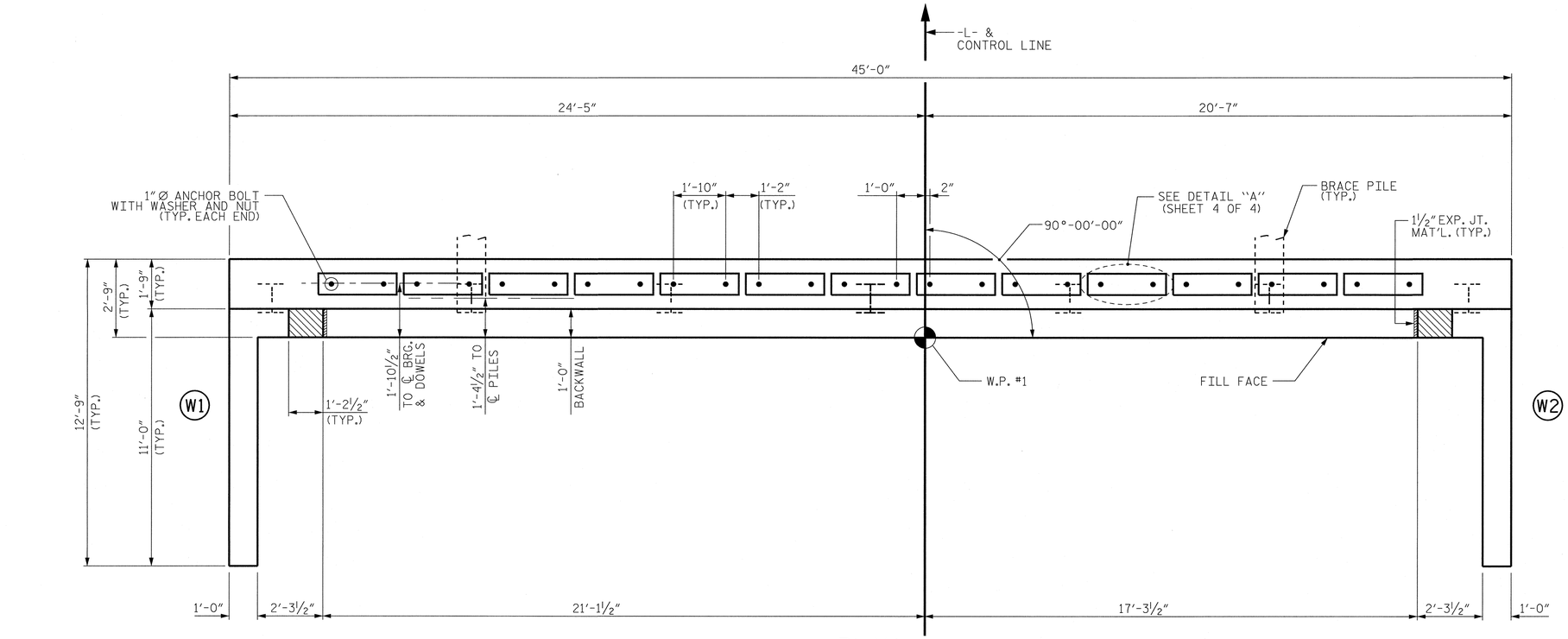

PLAN

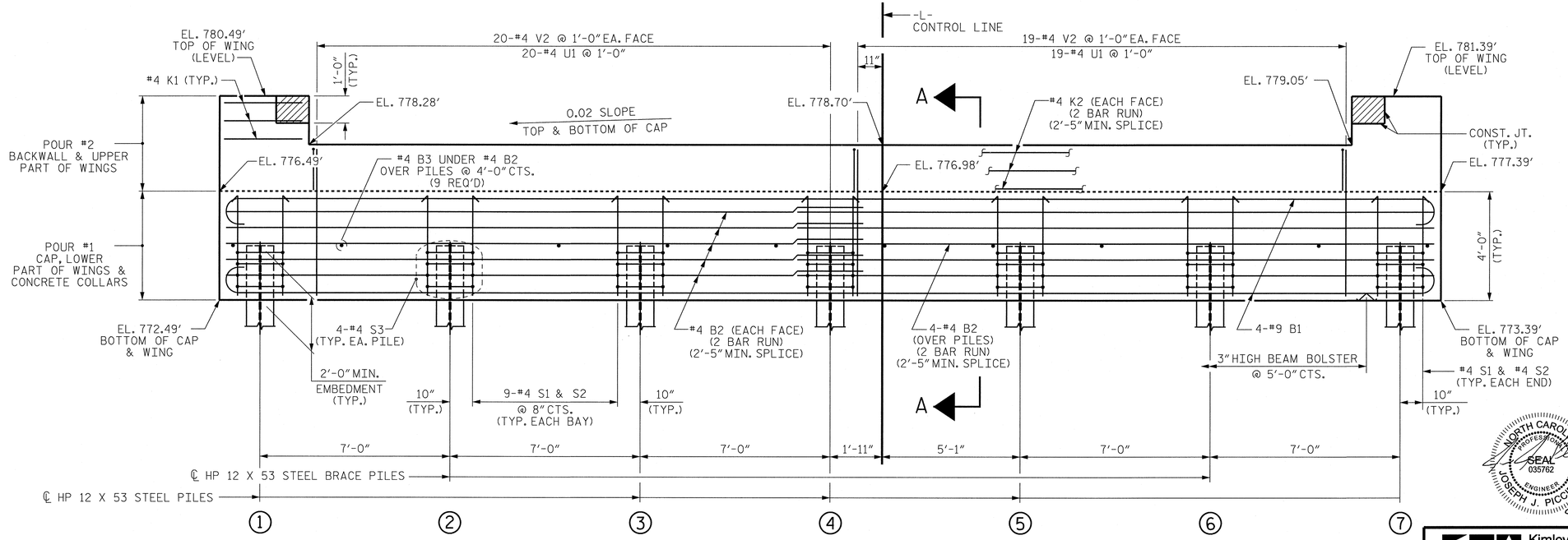

ELEVATION

WINGS NOT SHOWN FOR CLARITY.
FOR SECTION A-A, SEE SHEET 4 OF 4.
CONCRETE COLLARS FOR STEEL PILES NOT SHOWN IN PLAN AND ELEVATION VIEWS FOR CLARITY.
SEE "CORROSION PROTECTION FOR STEEL PILES DETAIL", SHEET 4 OF 4.

NOTES

STIRRUPS IN CAP MAY BE SHIFTED AS NECESSARY TO CLEAR DOWELS.

THE CONCRETE IN THE SHADED AREA OF THE WING SHALL BE POURED AFTER THE VERTICAL CONCRETE BARRIER RAIL IS CAST IF SLIP FORMING IS USED.

FOR PILE SPLICE DETAILS, SEE SHEET 4 OF 4.

FOR WING DETAILS, SEE SHEET 3 OF 4.

TOP OF PILE ELEVATIONS	
1	774.52'
2	774.66'
3	774.80'
4	774.94'
5	775.08'
6	775.22'
7	775.36'

PROJECT NO. 17BP.7.R.28
GUILFORD COUNTY
STATION: 12+13.50 -L-

SHEET 1 OF 4 REPLACES BRIDGE #400330

STATE OF NORTH CAROLINA
DEPARTMENT OF TRANSPORTATION
RALEIGH

SUBSTRUCTURE

END BENT No. 1

NORTH CAROLINA PROFESSIONAL SEAL 035762 ENGINEER JOSEPH J. PICCIRILLI 03/14/14

Kimley-Horn and Associates, Inc.
333 Fayetteville Street, Suite 600
Raleigh, NC 27601-1772
Phone (919) 835-1494
NC LICENSE # F-0102

This document, together with the concepts and designs presented herein, as an instrument of service, is intended only for the specific purpose and client for which it was prepared. Reuse of and improper reliance on this document without written authorization and adaptation by Kimley-Horn and Associates, Inc. shall be without liability to Kimley-Horn and Associates, Inc.
Copyright Kimley-Horn and Associates, Inc., 2014

REVISIONS						SHEET NO.
NO.	BY:	DATE:	NO.	BY:	DATE:	S-13
1			3			TOTAL SHEETS
2			4			18

ASSEMBLED BY : JFP DATE : 3/14
CHECKED BY : JCW DATE : 3/14
DRAWN BY : WJH 12/11
CHECKED BY : AAC 12/11

3/14/2014 K:\RDT_Structures\Bridge\NC\17BP Bridges - Group EV01\036192_BR400330\Cad\dgn\S-13.dgn

STD. NO. EB_39_90S4_39BB

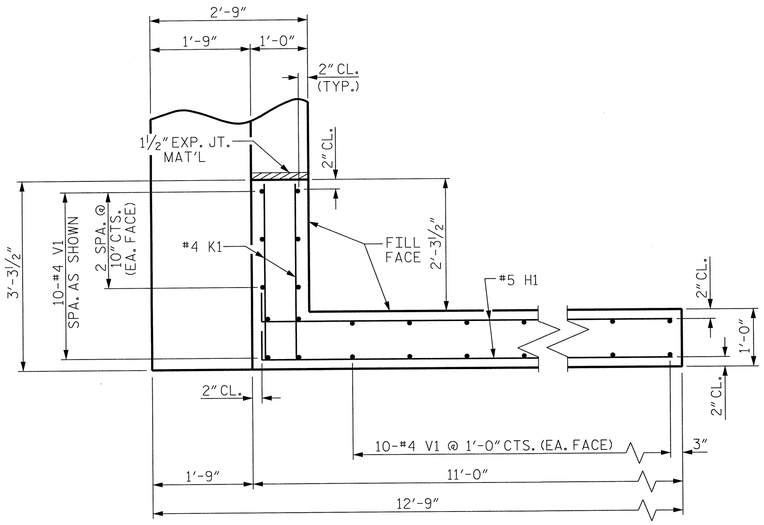

PLAN OF WING (W1)

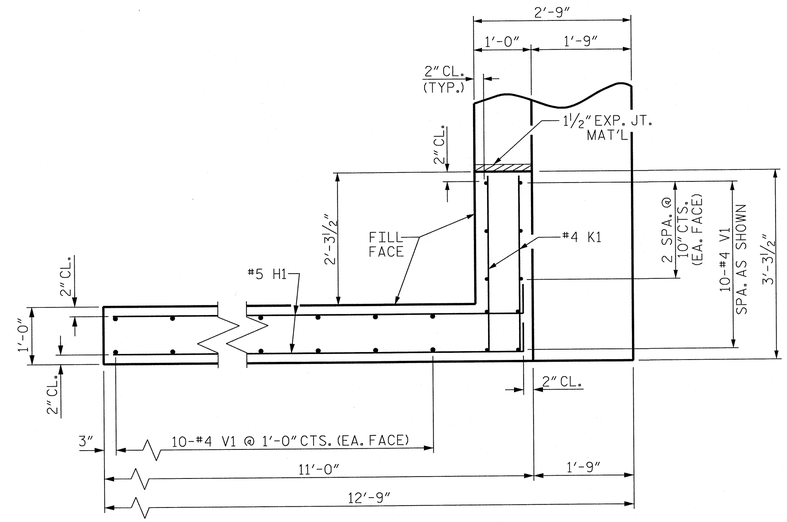

PLAN OF WING (W2)

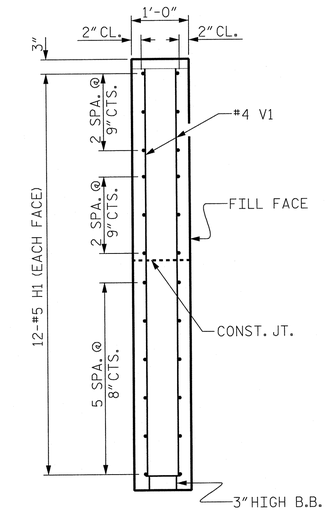

SECTION X-X

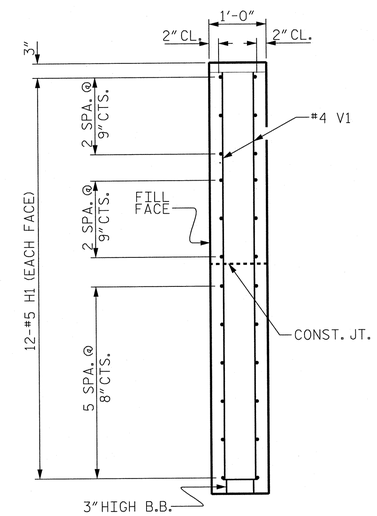

SECTION Y-Y

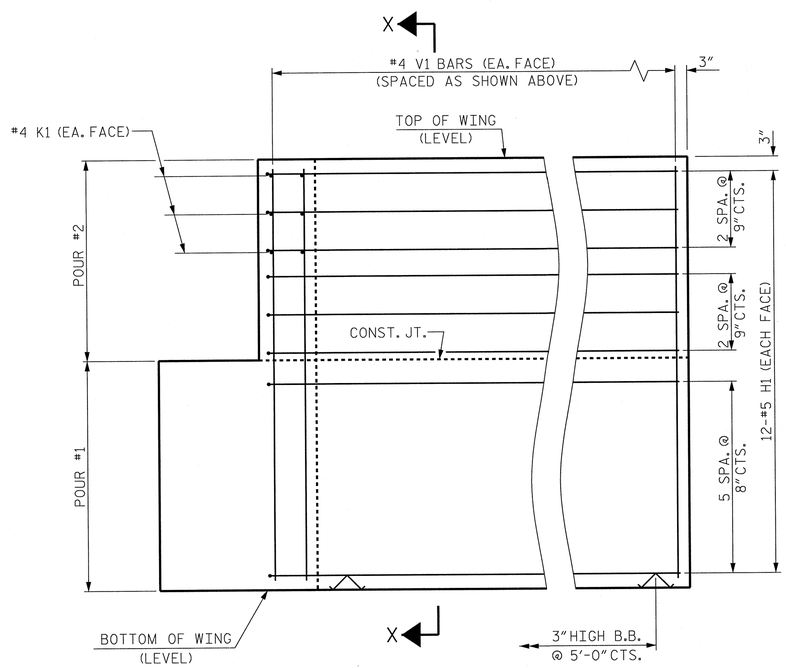

ELEVATION OF WING (W1)

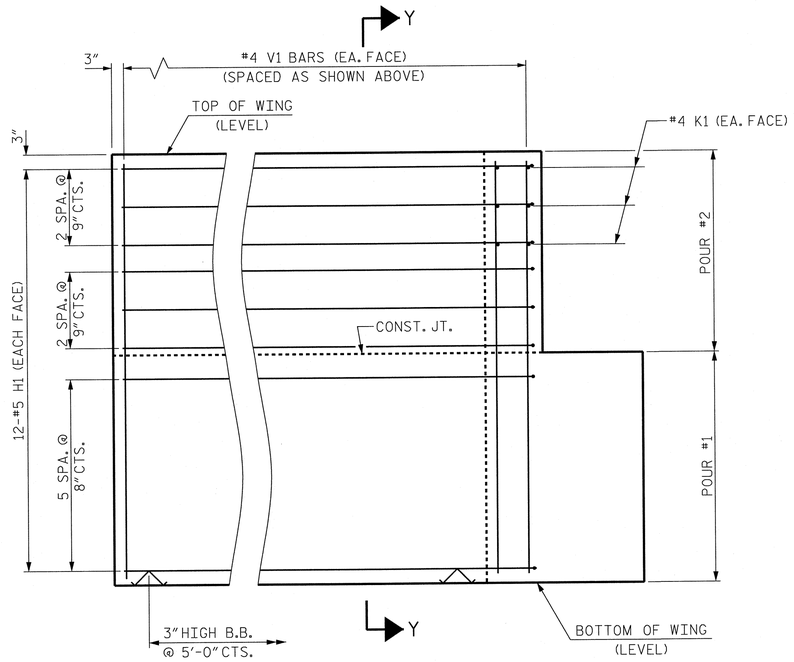

ELEVATION OF WING (W2)

WING DETAILS

PROJECT NO. 17BP.7.R.28

GUILFORD COUNTY

STATION: 12+13.50 -L-

SHEET 3 OF 4 REPLACES BRIDGE #400330

STATE OF NORTH CAROLINA
DEPARTMENT OF TRANSPORTATION
RALEIGH

SUBSTRUCTURE

END BENT
WING DETAILS

NORTH CAROLINA PROFESSIONAL SEAL 035762 ENGINEER JOSEPH J. PICCIRILLI 03/14/14

Kimley-Horn and Associates, Inc.
333 Fayetteville Street, Suite 600
Raleigh, NC 27601-1772
Phone (919) 835-1494
NC LICENSE # F-0102

This document, together with the concepts and designs presented herein, as an instrument of service, is intended only for the specific purpose and client for which it was prepared. Reuse of and improper reliance on this document without written authorization and adaption by Kimley-Horn and Associates, Inc. shall be without liability to Kimley-Horn and Associates, Inc.

Copyright Kimley-Horn and Associates, Inc., 2014

REVISIONS							
NO.	BY:	DATE:	NO.	BY:	DATE:	SHEET NO.	S-15
1			3			TOTAL SHEETS	18
2			4				

ASSEMBLED BY : JFP		DATE :	3/14
CHECKED BY : JCW		DATE :	3/14
DRAWN BY : WJH	12/11		
CHECKED BY : AAC	12/11		

3/14/2014 K:\RDT_Structures_Bridge\NC\17BP Bridges - Group E\01036192_BR400330\Cad\dgn\S-15.dgn

STD. NO. EB_39_90S4_39BB

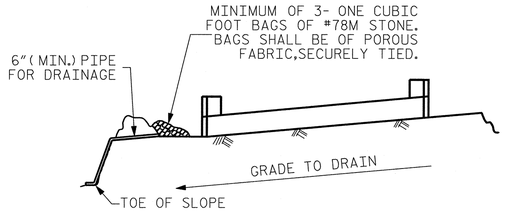

BAGGED STONE AND PIPE SHALL BE PLACED IMMEDIATELY AFTER COMPLETION OF END BENT EXCAVATION. PIPE MAY BE EITHER CONCRETE, CORRUGATED STEEL, CORRUGATED ALUMINUM ALLOY, OR CORRUGATED PLASTIC. PERFORATED PIPE WILL NOT BE ALLOWED.

BAGGED STONE SHALL REMAIN IN PLACE UNTIL THE ENGINEER DIRECTS THAT IT BE REMOVED. THE CONTRACTOR SHALL REMOVE AND DISPOSE OF SILT ACCUMULATIONS AT BAGGED STONE WHEN SO DIRECTED BY THE ENGINEER. BAGS SHALL BE REMOVED AND REPLACED WHENEVER THE ENGINEER DETERMINES THAT THEY HAVE DETERIORATED AND LOST THEIR EFFECTIVENESS.

NO SEPARATE PAYMENT WILL BE MADE FOR THIS WORK AND THE ENTIRE COST OF THIS WORK SHALL BE INCLUDED IN THE UNIT CONTRACT PRICE BID FOR THE SEVERAL PAY ITEMS.

TEMPORARY DRAINAGE AT END BENT

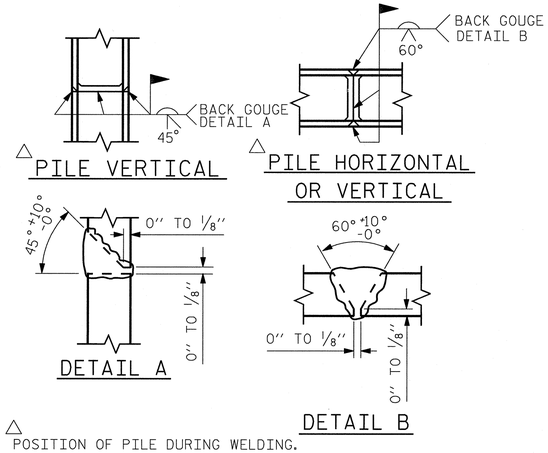

PILE SPLICE DETAILS

BAR TYPES

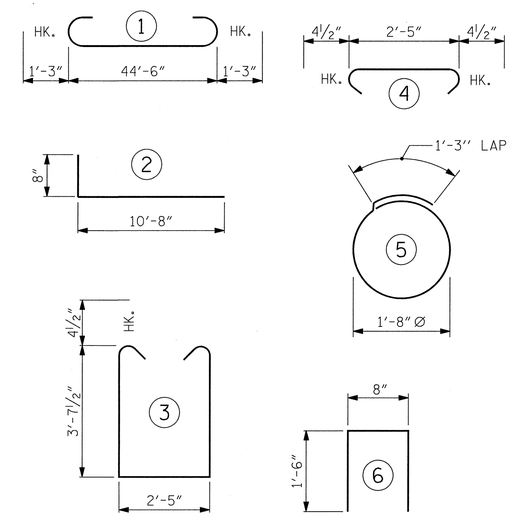

ALL BAR DIMENSIONS ARE OUT TO OUT.

END BENT No. 1	
HP 12 X 53 STEEL PILES	
NO: 7	LIN. FT.= 245
NO: 7	STEEL PILE POINTS

END BENT No. 2	
HP 12 X 53 STEEL PILES	
NO: 7	LIN. FT.= 245
NO: 7	STEEL PILE POINTS

BILL OF MATERIAL FOR ONE END BENT

BAR	NO.	SIZE	TYPE	LENGTH	WEIGHT
B1	8	#9	1	47'-0"	1278
B2	28	#4	STR	23'-7"	441
B3	12	#4	STR	2'-5"	19
D1	24	#8	STR	2'-3"	144
H1	48	#5	2	11'-4"	567
K1	12	#4	STR	2'-11"	23
K2	12	#4	STR	23'-7"	189
S1	56	#4	3	10'-5"	390
S2	56	#4	4	3'-2"	118
S3	28	#4	5	6'-6"	122
U1	39	#4	6	3'-8"	96
V1	60	#4	STR	7'-8"	307
V2	78	#4	STR	5'-4"	278

REINFORCING STEEL (FOR ONE END BENT) 3972 LBS.

CLASS A CONCRETE BREAKDOWN (FOR ONE END BENT)

POUR #1 CAP, LOWER PART OF WINGS & COLLARS 22.5 C.Y.

POUR #2 BACKWALL & UPPER PART OF WINGS 6.3 C.Y.

TOTAL CLASS A CONCRETE 28.8 C.Y.

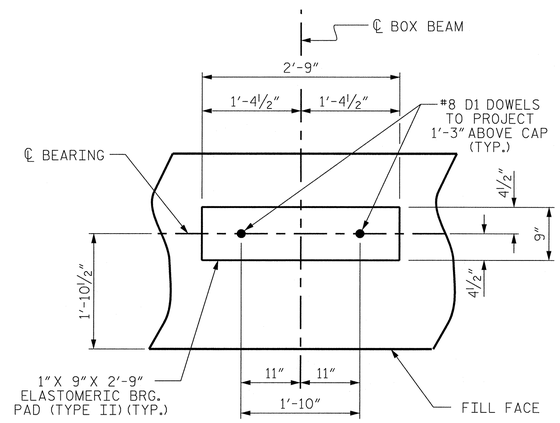

DETAIL "A"

(END BENT No. 1 SHOWN, END BENT No. 2 SIMILAR BY ROTATION)

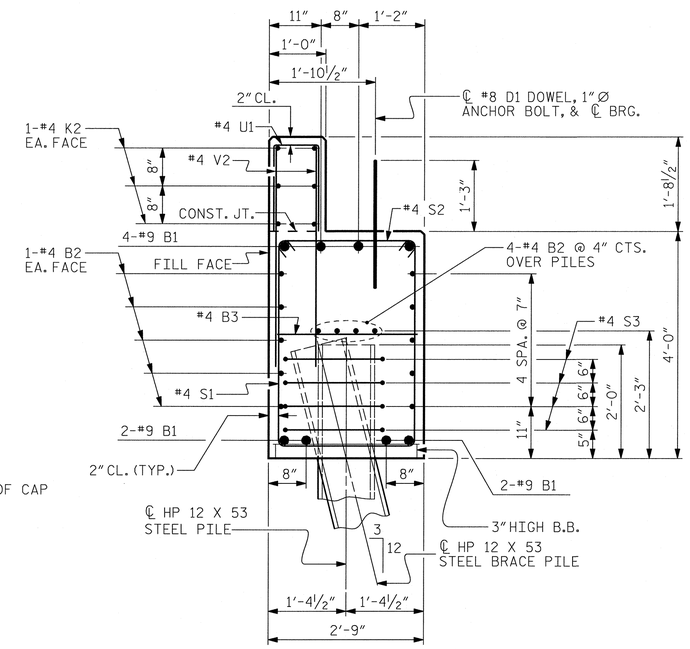

SECTION A-A

(CONCRETE COLLAR NOT SHOWN FOR CLARITY. SEE "CORROSION PROTECTION FOR STEEL PILES DETAIL.")

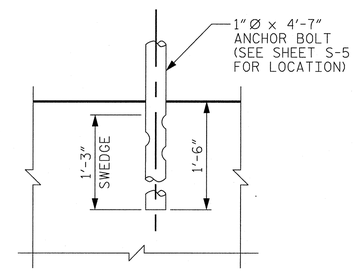

ANCHOR BOLT DETAIL

(REINFORCING NOT SHOWN FOR CLARITY.)

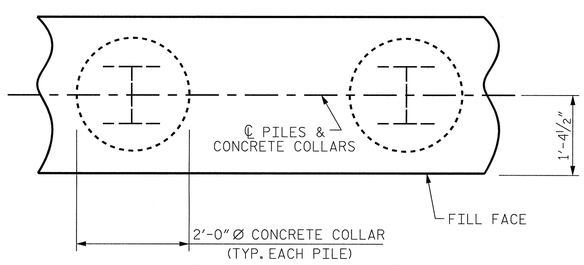

PLAN

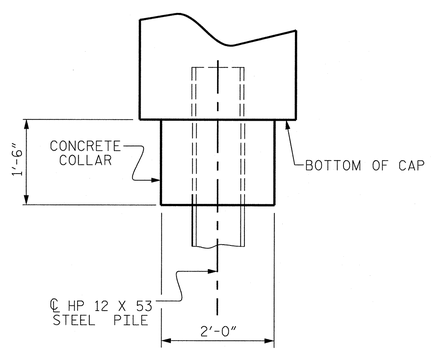

ELEVATION

CORROSION PROTECTION FOR STEEL PILES DETAIL

(END BENT No. 1 SHOWN, END BENT No. 2 SIMILAR BY ROTATION)

PROJECT NO. 17BP.7.R.28

GUILFORD COUNTY

STATION: 12+13.50 -L-

SHEET 4 OF 4 REPLACES BRIDGE #400330

STATE OF NORTH CAROLINA
DEPARTMENT OF TRANSPORTATION
RALEIGH

SUBSTRUCTURE

END BENT No. 1 & 2 DETAILS

NORTH CAROLINA PROFESSIONAL SEAL 035762 ENGINEER JOSEPH J. PICCIRILLI 03/14/14

Kimley-Horn and Associates, Inc.
333 Fayetteville Street, Suite 600
Raleigh, NC 27601-1772
Phone (919) 835-1494
NC LICENSE # F-0102

This document, together with the concepts and designs presented herein, as an instrument of services, is intended only for the specific purpose and client for which it was prepared. Reuse of and improper reliance of this document, without written authorization and adoption by Kimley-Horn and Associates, Inc. shall be without liability to Kimley-Horn and Associates, Inc.

Copyright Kimley-Horn and Associates, Inc., 2014

REVISIONS							
NO.	BY:	DATE:	NO.	BY:	DATE:		
1			3				
2			4				

SHEET NO. S-16

TOTAL SHEETS 18

ASSEMBLED BY : JFP		DATE :	3/14
CHECKED BY : JCW		DATE :	3/14
DRAWN BY : WJH	12/11		
CHECKED BY : AAC	12/11		

3/14/2014

K:\RDT-Structures_Bridge\NC\17BP Bridges - Group E\01036192 BR400330\Cad\dgn\S-16.dgn

STD. NO. EB_39_90S4_39BB

NOTES :

FOR BERM WIDTH DIMENSIONS, SEE GENERAL DRAWING.

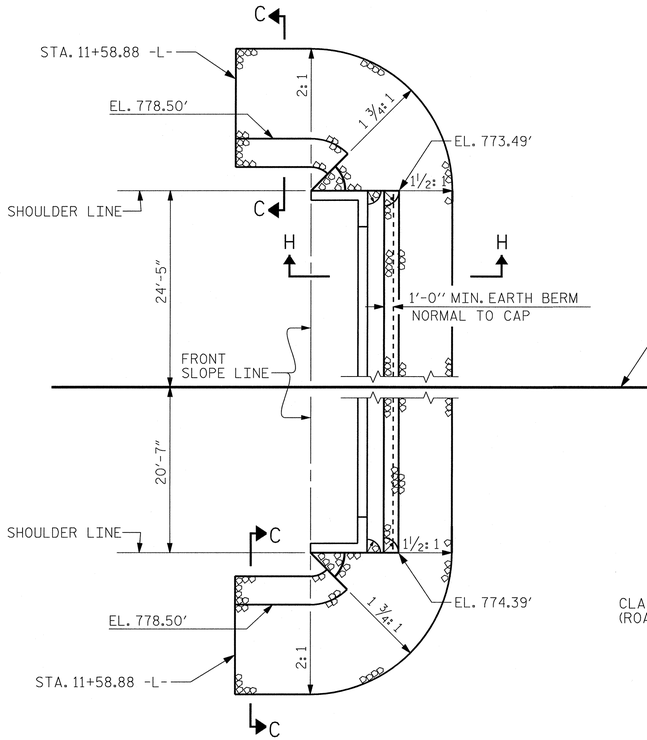

END BENT No. 1

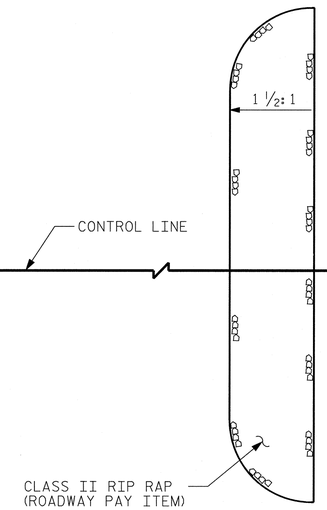

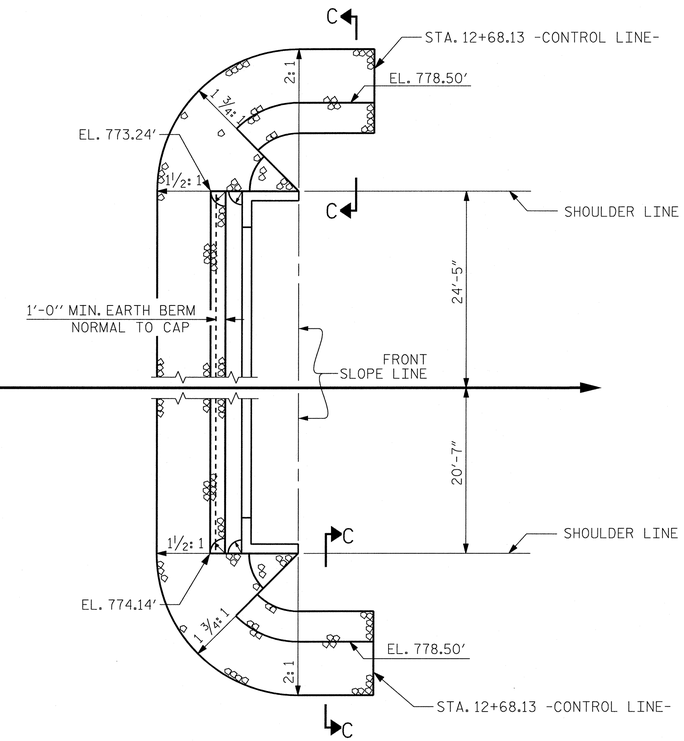

END BENT No. 2

ESTIMATED QUANTITIES		
BRIDGE @ STA. 12+13.50 -L-	RIP RAP CLASS II (2'-0" THICK)	GEOTEXTILE FOR DRAINAGE
	TONS	SQUARE YARDS
END BENT 1	70	80
END BENT 2	70	80
TOTAL	140	160

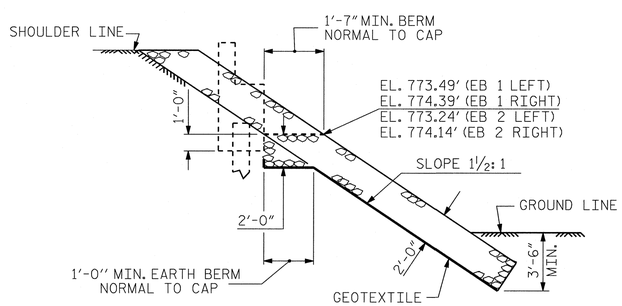

SECTION H-H

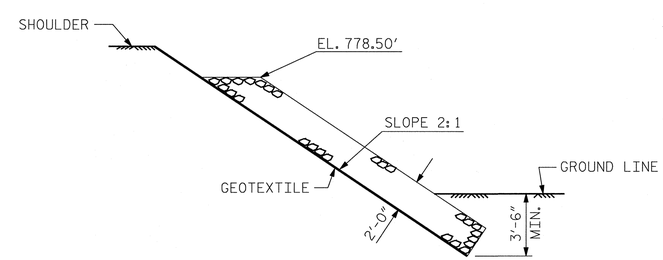

SECTION C-C

PROJECT NO. 17BP.7.R.28

GUILFORD COUNTY

STATION: 12+13.50 -L-

REPLACES BRIDGE #400330

STATE OF NORTH CAROLINA
DEPARTMENT OF TRANSPORTATION
RALEIGH

STANDARD

RIP RAP DETAILS

NORTH CAROLINA PROFESSIONAL SEAL 035762 ENGINEER JOSEPH J. PICCIRILLI 03/14/14

Kimley-Horn and Associates, Inc.
333 Fayetteville Street, Suite 600
Raleigh, NC 27601-1772
Phone (919) 835-1494
NC LICENSE # F-0102

This document, together with the concepts and designs presented herein, as an instrument of services, is intended only for the specific purpose and client for which it was prepared. Reuse of and improper reliance of this document without written authorization and adaption by Kimley-Horn and Associates, Inc. shall be without liability to Kimley-Horn and Associates, Inc.

Copyright Kimley-Horn and Associates, Inc., 2014

REVISIONS							SHEET NO.
NO.	BY:	DATE:	NO.	BY:	DATE:		S-17
1			3				TOTAL SHEETS
2			4				18

ASSEMBLED BY : JFP		DATE : 3/14	
CHECKED BY : JCW		DATE : 3/14	
DRAWN BY : REK	1/84	REV. 5/1/06R	TLA/GM
CHECKED BY : RDU	1/84	REV. 10/1/11	MAA/GM
		REV. 12/21/11	MAA/GM

3/14/2014 K:\RDT_Structures_Bridges\NC\17BP Bridges - Group EV01035192.BR400330\Cad\dgn\S-17.dgn

ST STD. NO. RR1

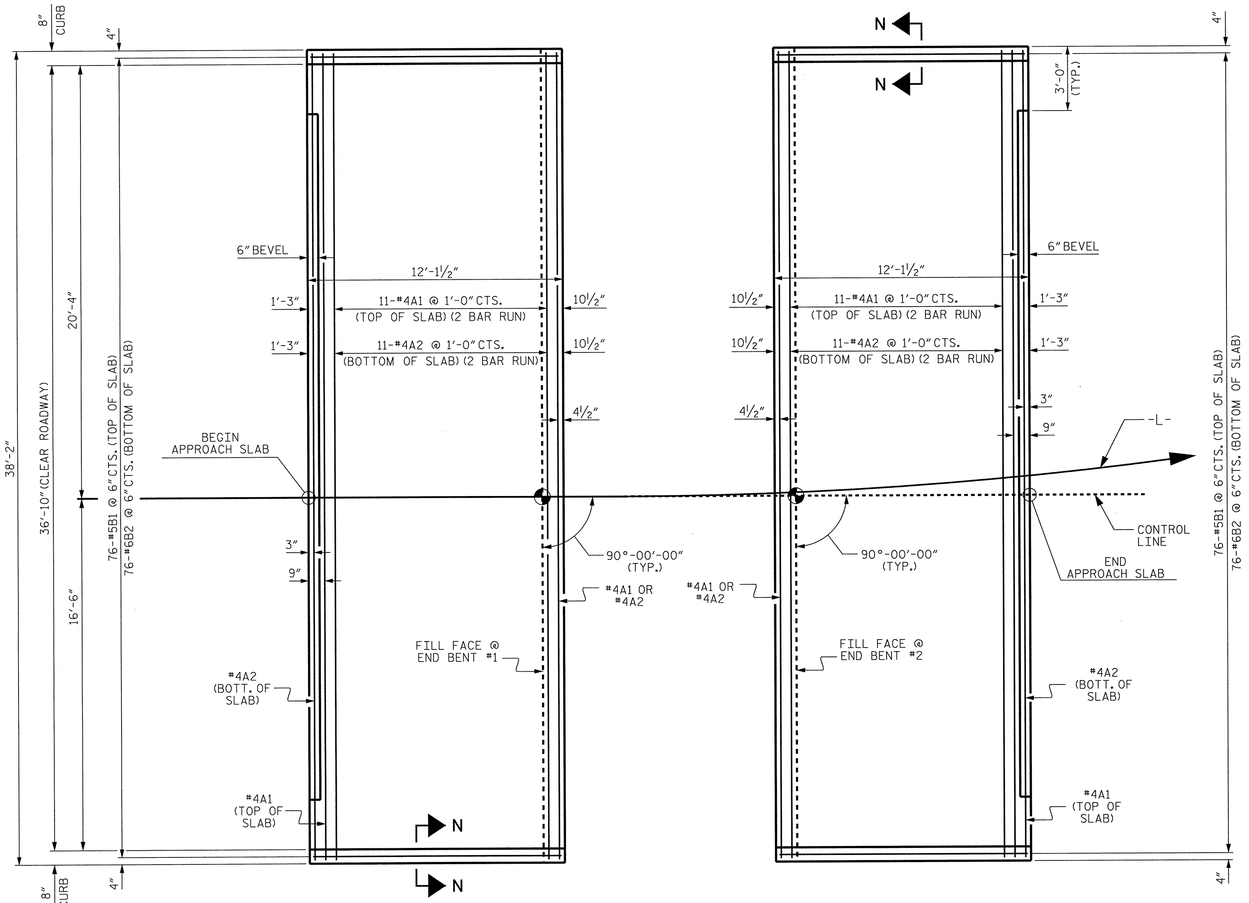

PLAN @ END BENT #1

PLAN @ END BENT #2

DIMENSIONS SHOWN ARE TYPICAL FOR BOTH APPROACH SLABS

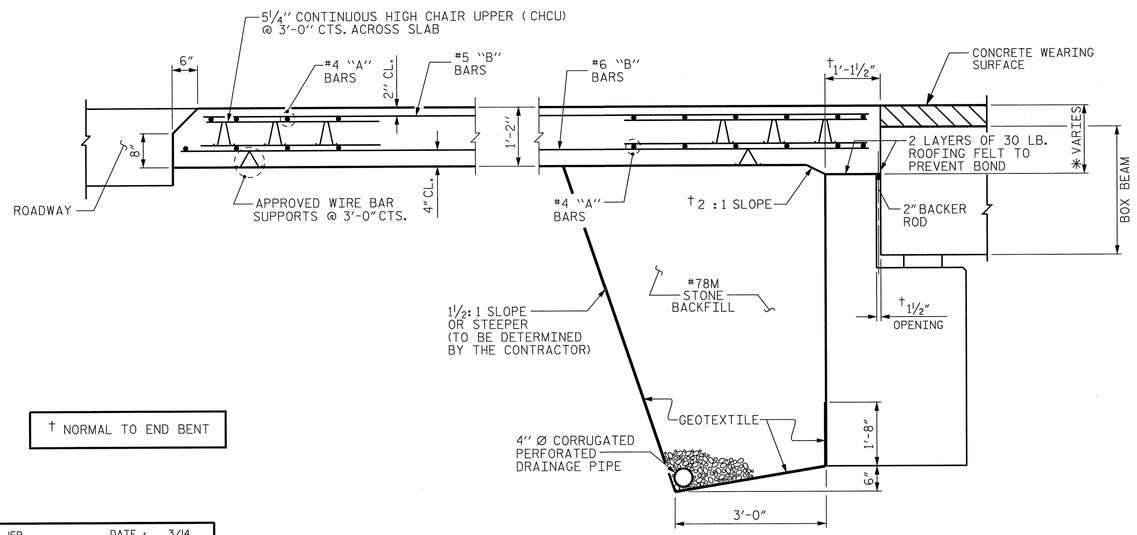

✳1'-9" @ EB1
1'-9¼" MAX, 1'-9" MIN. @ EB2

† NORMAL TO END BENT

SECTION THRU SLAB

NOTES

FOR BRIDGE APPROACH FILL INCLUDING GEOTEXTILE, 4" Ø DRAINAGE PIPE, AND #78M STONE BACKFILL, SEE ROADWAY PLANS.

GEOTEXTILE SHALL BE TYPE 1IN ACCORDANCE WITH THE STANDARD SPECIFICATIONS SECTION 1056.

#78M STONE BACKFILL (CLASS V SELECT MATERIAL) SHALL BE IN ACCORDANCE WITH STANDARD SPECIFICATIONS SECTION 1016.

#78M STONE BACKFILL IS TO BE CONTINUOUS ALONG FILL FACE OF BACKWALL FROM OUTSIDE EDGE TO OUTSIDE EDGE OF APPROACH SLAB.

FOR THE 4" Ø DRAINAGE PIPE OUTLET(S), SEE ROADWAY STANDARD DRAWINGS.

AREA BETWEEN THE WINGWALL AND APPROACH SLAB SHALL BE GRADED TO DRAIN THE WATER AWAY FROM THE FILL FACE OF THE BRIDGE AND SHALL BE PAVED. SEE ROADWAY PLANS.

REFER TO "CONCRETE WEARING SURFACE DETAILS" SHEET FOR APPROACH SLAB GROOVING.

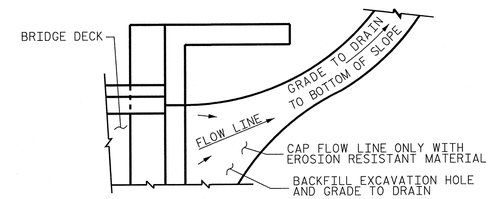

NOTE: IF THE APPROACH SLAB IS NOT CONSTRUCTED IMMEDIATELY AFTER THE BACKFILLING OF THE END BENT EXCAVATION, GRADE TO DRAIN TO THE BOTTOM OF THE SLOPE AND PROVIDE EROSION RESISTANT MATERIAL, SUCH AS FIBERGLASS ROVING OR AS DIRECTED BY THE ENGINEER TO PREVENT SOIL EROSION AND TO PROTECT THE AREA ADJACENT TO THE STRUCTURE. THE CONTRACTOR WILL BE REQUIRED TO REMOVE THESE MATERIALS PRIOR TO CONSTRUCTION OF THE APPROACH SLAB.

TEMPORARY DRAINAGE DETAIL

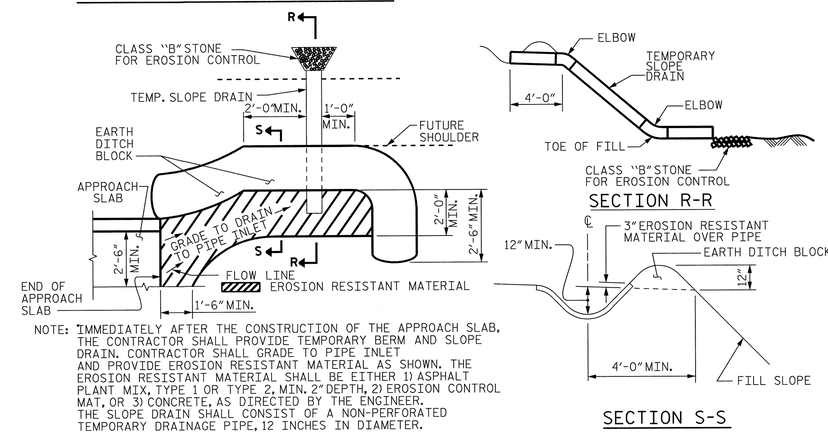

NOTE: IMMEDIATELY AFTER THE CONSTRUCTION OF THE APPROACH SLAB, THE CONTRACTOR SHALL PROVIDE TEMPORARY BERM AND SLOPE DRAIN. CONTRACTOR SHALL GRADE TO PIPE INLET AND PROVIDE EROSION RESISTANT MATERIAL AS SHOWN. THE EROSION RESISTANT MATERIAL SHALL BE EITHER 1) ASPHALT PLANT MIX, TYPE 1 OR TYPE 2, MIN. 2" DEPTH, 2) EROSION CONTROL MAT, OR 3) CONCRETE, AS DIRECTED BY THE ENGINEER. THE SLOPE DRAIN SHALL CONSIST OF A NON-PERFORATED TEMPORARY DRAINAGE PIPE, 12 INCHES IN DIAMETER.

PLAN VIEW

SECTION S-S

TEMPORARY BERM AND SLOPE DRAIN DETAILS

(TO BE USED WHEN SHOULDER BERM GUTTER IS REQUIRED)

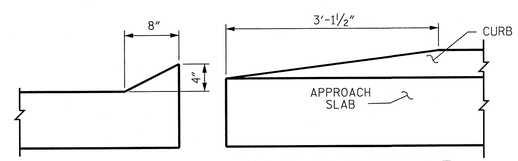

SECTION N-N

END OF CURB WITHOUT SHOULDER BERM GUTTER

CURB DETAILS

SPLICE LENGTHS		
BAR SIZE	EPOXY COATED	UNCOATED
#4	2'-0"	1'-9"
#5	2'-6"	2'-2"
#6	3'-10"	2'-7"

BILL OF MATERIAL

APPROACH SLAB AT EB #1

BAR	NO.	SIZE	TYPE	LENGTH	WEIGHT
✳ A1	26	#4	STR	19'-11"	346
A2	26	#4	STR	19'-10"	344
✳ B1	76	#5	STR	11'-2"	885
B2	76	#6	STR	11'-8"	1332
REINFORCING STEEL				LBS.	1676
✳ EPOXY COATED REINFORCING STEEL				LBS.	1231
CLASS AA CONCRETE				C. Y.	21.5

APPROACH SLAB AT EB #2

BAR	NO.	SIZE	TYPE	LENGTH	WEIGHT
✳ A1	26	#4	STR	19'-11"	346
A2	26	#4	STR	19'-10"	344
✳ B1	76	#5	STR	11'-2"	885
B2	76	#6	STR	11'-8"	1332
REINFORCING STEEL				LBS.	1676
✳ EPOXY COATED REINFORCING STEEL				LBS.	1231
CLASS AA CONCRETE				C. Y.	21.5

PROJECT NO. 17BP.7.R.28

GUILFORD COUNTY

STATION: 12+13.50 -L-

REPLACES BRIDGE #400330

STATE OF NORTH CAROLINA
DEPARTMENT OF TRANSPORTATION
RALEIGH

STANDARD

BRIDGE APPROACH SLAB FOR PRESTRESSED CONCRETE BOX BEAM UNIT (SUB-REGIONAL TIER) 90° SKEW

NORTH CAROLINA PROFESSIONAL SEAL 035762 ENGINEER JOSEPH J. PICCIRILLI 03/14/14

Kimley-Horn and Associates, Inc.
333 Fayetteville Street, Suite 600
Raleigh, NC 27601-1772
Phone (919) 835-1494
NC LICENSE # F-0102

This document, together with the concepts and designs presented herein, as an instrument of services, is intended only for the specific purpose and client for which it was prepared. Reuse of and improper reliance of this document without written authorization and adaption by Kimley-Horn and Associates, Inc. shall be without liability to Kimley-Horn and Associates, Inc.

Copyright Kimley-Horn and Associates, Inc., 2014

REVISIONS						
NO.	BY:	DATE:	NO.	BY:	DATE:	SHEET NO. S-18
1			3			TOTAL SHEETS 18
2			4			

STD. NO. BAS_BB_39_90S

ASSEMBLED BY : JFP	DATE : 3/14	
CHECKED BY : JCW	DATE : 3/14	
DRAWN BY : SHS/MAA 5-09	REV. 12-11	MAA/AAC
CHECKED BY : BCH 5-09		

3/14/2014 K:\RDT_Structures_Bridge\NCV17BP Bridges - Group E\01036192_BR400330\Cad\dgn\S-18.dgn