09/08/99

STATE PROJECT: 41665.3B

FINAL PLANS

See Sheet 1-A For Index of Sheets
See Sheet 1-B for Conventional Symbols

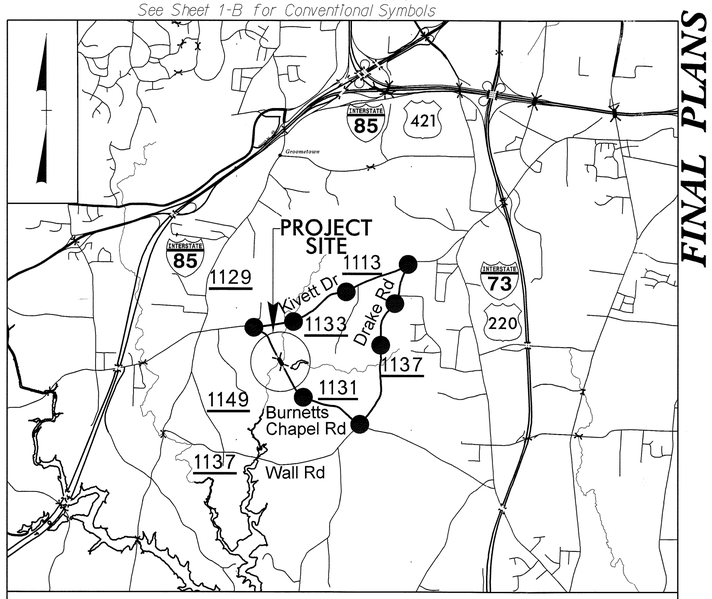

VICINITY MAP

DETOUR ROUTE

STATE OF NORTH CAROLINA
DIVISION OF HIGHWAYS

GUILFORD COUNTY

STATE	STATE PROJECT REFERENCE NO.	SHEET NO.	TOTAL SHEETS
N.C.	41665.3B	1	

STATE PROJ. NO.	F.A. PROJ. NO.	DESCRIPTION
41665.3B		PE
41665.3B		R/W & UTIL.
41665.3B		CONST.

LOCATION: BRIDGE NO. 400027 OVER HICKORY CREEK ON SR 1131 (BURNETTS CHAPEL ROAD)

TYPE OF WORK: GRADING, DRAINAGE, PAVING, AND STRUCTURE

4

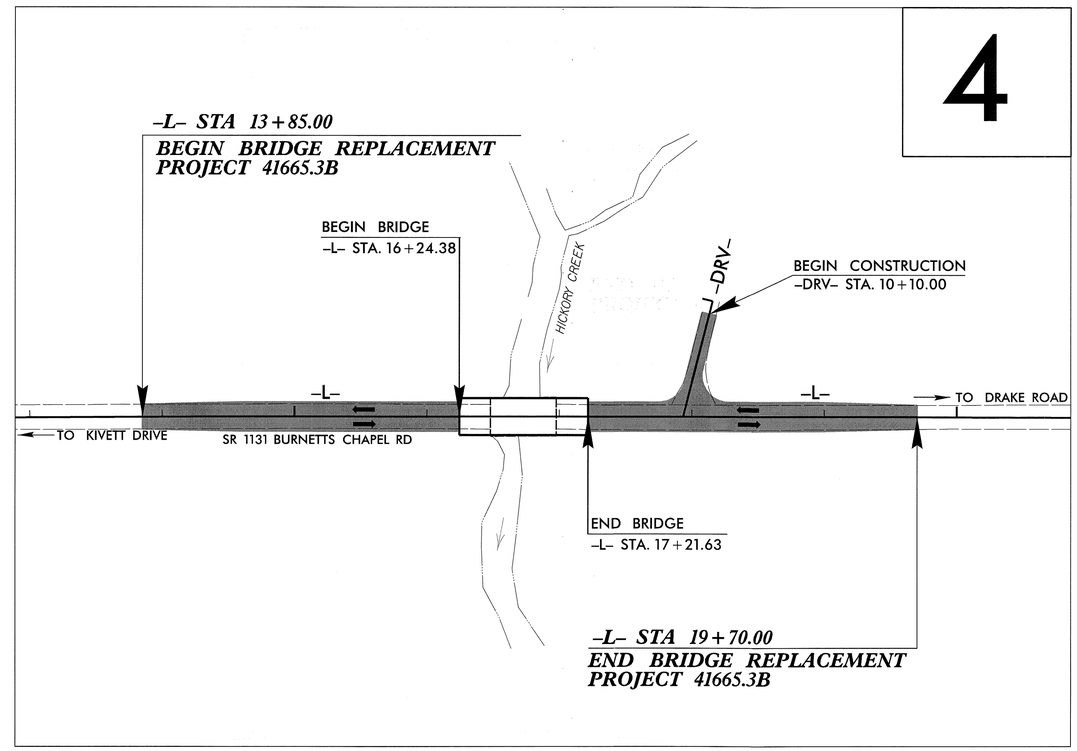

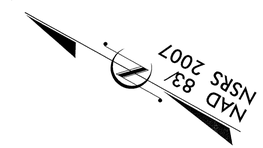

CONTRACT:

GRAPHIC SCALES

50 25 0 50 100
PLANS

50 25 0 50 100
PROFILE (HORIZONTAL)

10 5 0 10 20
PROFILE (VERTICAL)

DESIGN DATA

ADT 2011 = 1300
ADT 2014 = 1300
DHV = %
D = 50 %
T = 7 % *
V = 50 MPH
* TTST = 7% DUAL
FUNC CLASS =
RURAL LOCAL
SUB-REGIONAL TIER

PROJECT LENGTH

LENGTH OF ROADWAY PROJECT 17BP.13.R.82 = 0.093 MILES
LENGTH OF STRUCTURE PROJECT 17BP.13.R.82 = 0.018 MILES
TOTAL LENGTH OF PROJECT 17BP.13.R.82 = 0.111 MILES

Prepared In the Office of:
KCI Associates of N.C., P.A.
4601 Six Forks Road
Landmark Center II, Suite 220
Raleigh, NC 27609
Phone (919) 783-9214
Fax (919) 783-9266
KCI
http://www.kci.com

2012 STANDARD SPECIFICATIONS

RIGHT OF WAY DATE:
APRIL 1, 2014

LETTING DATE:

NCDOT CONTACT: TIM POWERS, PE

Plans Prepared For:
DIVISION OF HIGHWAYS
1584 Yanceyville St.
Greensboro, NC 27415

CHARLES L. FLOWE, P.E.
PROJECT ENGINEER

BARRY C. SMITH, P.E.
PROJECT DESIGN ENGINEER

HYDRAULICS ENGINEER
NORTH CAROLINA PROFESSIONAL SEAL 022000 ENGINEER W. GALEN CAIL
SIGNATURE: W. Galen Cail 5/23/14

ROADWAY DESIGN ENGINEER
NORTH CAROLINA PROFESSIONAL SEAL 034375 ENGINEER BARRY C. SMITH
SIGNATURE: Barry C. Smith P.E.

STATE OF NORTH CAROLINA DEPARTMENT OF TRANSPORTATION

05-MAY-2014 14:29
M:\2013\22133395.01\NCDOT Guilford Bridge 27\Roadway\Proj\027_Rdy_tsh_sl.dgn
$$$$USERNAME$$$$

PROJECT REFERENCE NO.	SHEET NO.
41665.3B	1-A

ROADWAY DESIGN ENGINEER

INDEX OF SHEETS

SHEET NUMBER	SHEET
1	TITLE SHEET
1-A	INDEX OF SHEETS, GENERAL NOTES, AND LIST OF STANDARD DRAWINGS
1-B	CONVENTIONAL SYMBOLS
2	TYPICAL SECTIONS, PAVEMENT SCHEDULE, AND WEDGING DETAIL
3	SUMMARY OF QUANTITIES
3-A	SUMMARY OF EARTHWORK, SUMMARY OF PAVEMENT REMOVAL, SUMMARY OF PAVEMENT BREAKUP, OF DRAINAGE QUANTITIES, SUMMARY OF RIP RAP, AND GUARDRAIL SUMMARY
4	PLAN SHEET
5	PROFILE SHEET
TMP-1 TO TMP-4	TRANSPORTATION MANAGEMENT PLANS
PMP-1 TO PMP-2	PAVEMENT MARKING PLANS
EC-1 TO EC-5	EROSION CONTROL PLANS
RF-1	REFORESTATION DETAIL SHEET
X-1A	CROSS SECTION SUMMARY SHEET
X-1 TO X-4	-L- CROSS-SECTIONS
X-5 TO X-7	-DET- CROSS SECTIONS
S-1 TO S-16	STRUCTURE PLANS

GENERAL NOTES:

2012 SPECIFICATIONS
EFFECTIVE: 01-17-2012
REVISED: 07-30-2012

GRADING AND SURFACING OR RESURFACING AND WIDENING:

THE GRADE LINES SHOWN DENOTE THE FINISHED ELEVATION OF THE PROPOSED SURFACING AT GRADE POINTS SHOWN ON THE TYPICAL SECTIONS. WHERE NO GRADE LINES ARE SHOWN, THE PROFILES SHOWN DENOTE THE TOP ELEVATION OF THE EXISTING PAVEMENT ALONG THE CENTER LINE OF SURVEY ON WHICH THE PROPOSED RESURFACING WILL BE PLACED. GRADE LINES MAY BE ADJUSTED BY THE ENGINEER IN ORDER TO SECURE A PROPER TIE-IN.

CLEARING:

CLEARING ON THIS PROJECT SHALL BE PERFORMED TO THE LIMITS ESTABLISHED BY METHOD II.

SUPERELEVATION:

ALL CURVES ON THIS PROJECT SHALL BE SUPERELEVATED IN ACCORDANCE WITH STD. NO. 225.04 USING THE RATE OF SUPERELEVATION AND RUNOFF SHOWN ON THE PLANS. SUPERELEVATION IS TO BE REVOLVED ABOUT THE GRADE POINTS SHOWN ON THE TYPICAL SECTIONS.

SHOULDER CONSTRUCTION:

ASPHALT, EARTH, AND CONCRETE SHOULDER CONSTRUCTION ON THE HIGH SIDE OF SUPERELEVATED CURVES SHALL BE IN ACCORDANCE WITH STD. NO. 560.01

GUARDRAIL:

THE GUARDRAIL LOCATIONS SHOWN ON THE PLANS MAY BE ADJUSTED DURING CONSTRUCTION AS DIRECTED BY THE ENGINEER. THE CONTRACTOR SHOULD CONSULT WITH THE ENGINEER PRIOR TO ORDERING GUARDRAIL MATERIAL.

END BENTS:

THE ENGINEER SHALL CHECK THE STRUCTURE END BENT PLANS, DETAILS, AND CROSS-SECTION PRIOR TO SETTING OF THE SLOPE STAKES FOR THE EMBANKMENT OR EXCAVATION APPROACHING A BRIDGE.

UTILITIES:

UTILITY OWNERS ON THIS PROJECT ARE DUKE ENERGY AND TIME WARNER.

ANY RELOCATION OF EXISTING UTILITIES WILL BE ACCOMPLISHED BY OTHERS.

RIGHT-OF-WAY MARKERS:

ALL RIGHT-OF-WAY MARKERS ON THIS PROJECT SHALL BE PLACED BY OTHERS.

EFF. 01-17-2012
REV. 10-30-2012

2012 ROADWAY ENGLISH STANDARD DRAWINGS

The following Roadway Standards as appear in "Roadway Standard Drawings" Highway Design Branch - N. C. Department of Transportation - Raleigh, N. C., Dated January, 2012 are applicable to this project and by reference hereby are considered a part of these plans:

STD.NO.	TITLE
DIVISION 2 - EARTHWORK	
200.02	Method of Clearing - Method II
225.02	Guide for Grading Subgrade - Secondary and Local
225.04	Method of Obtaining Superelevation - Two Lane Pavement
DIVISION 3 - PIPE CULVERTS	
300.01	Method of Pipe Installation
DIVISION 4 - MAJOR STRUCTURES	
422.11	Bridge Approach Fills - Sub Regional Tier
DIVISION 5 - SUBGRADE, BASES AND SHOULDERS	
560.01	Method of Shoulder Construction - High Side of Superelevated Curve - Method I
DIVISION 8 - INCIDENTALS	
840.29	Frames and Narrow Slot Flat Grates
840.35	Traffic Bearing Grated Drop Inlet - for Cast iron Double Frame and Grates
846.01	Concrete Curb, Gutter and Curb & Gutter
846.04	Drop Inlet Installation in Shoulder Berm Gutter
862.01	Guardrail Placement
862.02	Guardrail Installation
862.03	Structure Anchor Units (Details in Lieu of Standard Drawing as March 2013 Letting)
876.01	Rip Rap in Channels
876.02	Guide for Rip Rap at Pipe Outlets
876.04	Drainage Ditches with Class 'B' Rip Rap

8/17/99
17-JUN-2014 09:23
R:\2013\2013365.01 NCDOT Guilford Bridge 27\Roadway\Proj\027_Rdy_tsh_sl1A.dgn
$$$$USERNAME$$$$

04/16/11

PROJECT REFERENCE NO.	SHEET NO.
41665.3B	1-B

Note: Not to Scale

****S.U.E. = Subsurface Utility Engineering***

STATE OF NORTH CAROLINA
DIVISION OF HIGHWAYS

CONVENTIONAL PLAN SHEET SYMBOLS

BOUNDARIES AND PROPERTY:

- State Line
- County Line
- Township Line
- City Line
- Reservation Line
- Property Line
- Existing Iron Pin — EIP
- Property Corner
- Property Monument — ECM
- Parcel/Sequence Number — 123
- Existing Fence Line
- Proposed Woven Wire Fence
- Proposed Chain Link Fence
- Proposed Barbed Wire Fence
- Existing Wetland Boundary — WLB
- Proposed Wetland Boundary — WLB
- Existing Endangered Animal Boundary — EAB
- Existing Endangered Plant Boundary — EPB
- Known Soil Contamination: Area or Site
- Potential Soil Contamination: Area or Site

BUILDINGS AND OTHER CULTURE:

- Gas Pump Vent or U/G Tank Cap
- Sign — S
- Well — W
- Small Mine
- Foundation
- Area Outline
- Cemetery
- Building
- School
- Church
- Dam

HYDROLOGY:

- Stream or Body of Water
- Hydro, Pool or Reservoir
- Jurisdictional Stream — JS
- Buffer Zone 1 — BZ 1
- Buffer Zone 2 — BZ 2
- Flow Arrow
- Disappearing Stream
- Spring
- Wetland
- Proposed Lateral, Tail, Head Ditch — FLOW
- False Sump

RAILROADS:

- Standard Gauge — CSX TRANSPORTATION
- RR Signal Milepost — MILEPOST 35
- Switch — SWITCH
- RR Abandoned
- RR Dismantled

RIGHT OF WAY:

- Baseline Control Point
- Existing Right of Way Marker
- Existing Right of Way Line
- Proposed Right of Way Line — RW
- Proposed Right of Way Line with Iron Pin and Cap Marker — RW
- Proposed Right of Way Line with Concrete or Granite R/W Marker — RW
- Proposed Control of Access Line with Concrete C/A Marker — CA
- Existing Control of Access — CA
- Proposed Control of Access — CA
- Existing Easement Line — E
- Proposed Temporary Construction Easement — E
- Proposed Temporary Drainage Easement — TDE
- Proposed Permanent Drainage Easement — PDE
- Proposed Permanent Drainage / Utility Easement — DUE
- Proposed Permanent Utility Easement — PUE
- Proposed Temporary Utility Easement — TUE
- Proposed Aerial Utility Easement — AUE
- Proposed Permanent Easement with Iron Pin and Cap Marker

ROADS AND RELATED FEATURES:

- Existing Edge of Pavement
- Existing Curb
- Proposed Slope Stakes Cut — C
- Proposed Slope Stakes Fill — F
- Proposed Curb Ramp — CR
- Existing Metal Guardrail
- Proposed Guardrail
- Existing Cable Guiderail
- Proposed Cable Guiderail
- Equality Symbol
- Pavement Removal

VEGETATION:

- Single Tree
- Single Shrub
- Hedge
- Woods Line
- Orchard
- Vineyard — Vineyard

EXISTING STRUCTURES:

MAJOR:

- Bridge, Tunnel or Box Culvert — CONC
- Bridge Wing Wall, Head Wall and End Wall — CONC WW

MINOR:

- Head and End Wall — CONC HW
- Pipe Culvert
- Footbridge
- Drainage Box: Catch Basin, DI or JB — CB
- Paved Ditch Gutter
- Storm Sewer Manhole — S
- Storm Sewer — S

UTILITIES:

POWER:

- Existing Power Pole
- Proposed Power Pole
- Existing Joint Use Pole
- Proposed Joint Use Pole
- Power Manhole — P
- Power Line Tower
- Power Transformer
- U/G Power Cable Hand Hole
- H-Frame Pole
- Recorded U/G Power Line — P
- Designated U/G Power Line (S.U.E.*) — P

TELEPHONE:

- Existing Telephone Pole
- Proposed Telephone Pole
- Telephone Manhole — T
- Telephone Booth
- Telephone Pedestal — T
- Telephone Cell Tower
- U/G Telephone Cable Hand Hole — HH
- Recorded U/G Telephone Cable — T
- Designated U/G Telephone Cable (S.U.E.*) — T
- Recorded U/G Telephone Conduit — TC
- Designated U/G Telephone Conduit (S.U.E.*) — TC
- Recorded U/G Fiber Optics Cable — T FO
- Designated U/G Fiber Optics Cable (S.U.E.*) — T FO

WATER:

- Water Manhole — W
- Water Meter
- Water Valve
- Water Hydrant
- Recorded U/G Water Line
- Designated U/G Water Line (S.U.E.*)
- Above Ground Water Line — A/G Water

TV:

- TV Satellite Dish
- TV Pedestal — C
- TV Tower
- U/G TV Cable Hand Hole — HH
- Recorded U/G TV Cable — TV
- Designated U/G TV Cable (S.U.E.*) — TV
- Recorded U/G Fiber Optic Cable — TV FO
- Designated U/G Fiber Optic Cable (S.U.E.*) — TV FO

GAS:

- Gas Valve
- Gas Meter
- Recorded U/G Gas Line — G
- Designated U/G Gas Line (S.U.E.*) — G
- Above Ground Gas Line — A/G Gas

SANITARY SEWER:

- Sanitary Sewer Manhole
- Sanitary Sewer Cleanout
- U/G Sanitary Sewer Line — SS
- Above Ground Sanitary Sewer — A/G Sanitary Sewer
- Recorded SS Forced Main Line — FSS
- Designated SS Forced Main Line (S.U.E.*) — FSS

MISCELLANEOUS:

- Utility Pole
- Utility Pole with Base
- Utility Located Object
- Utility Traffic Signal Box — S
- Utility Unknown U/G Line — ?UTL
- U/G Tank; Water, Gas, Oil
- Underground Storage Tank, Approx. Loc. — UST
- A/G Tank; Water, Gas, Oil
- Geoenvironmental Boring
- U/G Test Hole (S.U.E.*)
- Abandoned According to Utility Records — AATUR
- End of Information — E.O.I.

PROJECT REFERENCE NO.	SHEET NO.
41665.3B	2
R/W SHEET NO.	

ROADWAY DESIGN ENGINEER

NORTH CAROLINA PROFESSIONAL SEAL 034375 ENGINEER BARRY C. SMITH

6-18-14

KCI Engineers • Planners • Scientists • Construction Managers
4601 Six Forks Road, Landmark Center II, Suite 220
Raleigh, NC 27609-5210
http://www.kci.com Phone (919) 783-9214 • Fax (919) 783-9266

PAVEMENT SCHEDULE
PRELIMINARY DESIGN

C1	PROP. APPROX. 1½" ASPHALT CONCRETE SURFACE COURSE, TYPE S9.5B, AT AN AVERAGE RATE OF 168 LBS. PER SQ. YD.
C2	PROP. APPROX. 3" ASPHALT CONCRETE SURFACE COURSE, TYPE S9.5B, AT AN AVERAGE RATE OF 168 LBS. PER SQ. YD. IN EACH OF TWO LAYERS.
C3	PROP. VAR. DEPTH ASPHALT CONCRETE SURFACE COURSE, TYPE S9.5B, AT AN AVERAGE RATE OF 112 LBS. PER SQ. YD. PER 1" DEPTH. TO BE PLACED IN LAYERS NOT TO EXCEED 2" IN DEPTH.
D1	PROP. APPROX. 3" ASPHALT CONCRETE INTERMEDIATE COURSE, TYPE I19.0B, AT AN AVERAGE RATE OF 342 LBS. PER SQ. YD.
D2	PROP. VAR. DEPTH ASPHALT CONCRETE INTERMEDIATE COURSE, TYPE I19.0B, AT AN AVERAGE RATE OF 114 LBS. PER SQ. YD. PER 1" DEPTH TO BE PLACED IN LAYERS NOT LESS THAN 2½" OR GREATER THAN 4" IN DEPTH.
E1	PROP. APPROX. 3½" ASPHALT CONCRETE BASE COURSE, TYPE B25.0B, AT AN AVERAGE RATE OF 399 LBS. PER SQ. YD.
E2	PROP. VAR. DEPTH ASPHALT CONCRETE BASE COURSE, TYPE B25.0B, AT AN AVERAGE RATE OF 114 LBS. PER SQ. YD. PER 1" DEPTH. TO BE PLACED IN LAYERS NOT LESS THAN 3" IN DEPTH OR GREATER THAN 5½" IN DEPTH.
S	8" CONCRETE DRIVEWAY WITH WIRE MESH.
T	EARTH MATERIAL.
U	EXISTING PAVEMENT.
W	VARIABLE DEPTH ASPHALT PAVEMENT (SEE STANDARD WEDGING DETAIL THIS SHEET).

ALL PAVEMENT EDGE SLOPES ARE 1:1

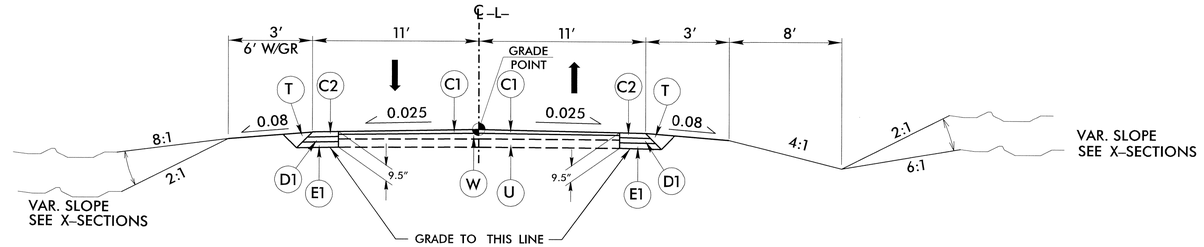

ROADWAY TYPICAL SECTION 1

ROADWAY TYPICAL SECTION 1
-L- STA. 13+85.00 TO STA. 14+60.00
-L- STA. 18+60.00 TO STA. 19+70.00

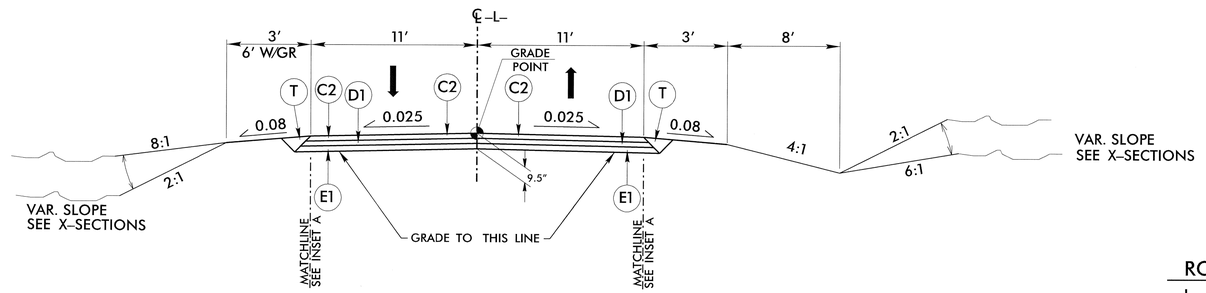

ROADWAY TYPICAL SECTION 2

ROADWAY TYPICAL SECTION 2
-L- STA. 14+60.00 TO STA. 16+24.38
-L- STA. 17+21.63 TO STA. 18+60.00

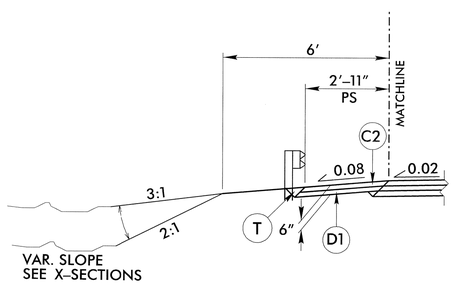

INSET A
USED IN GUARDRAIL LOCATIONS

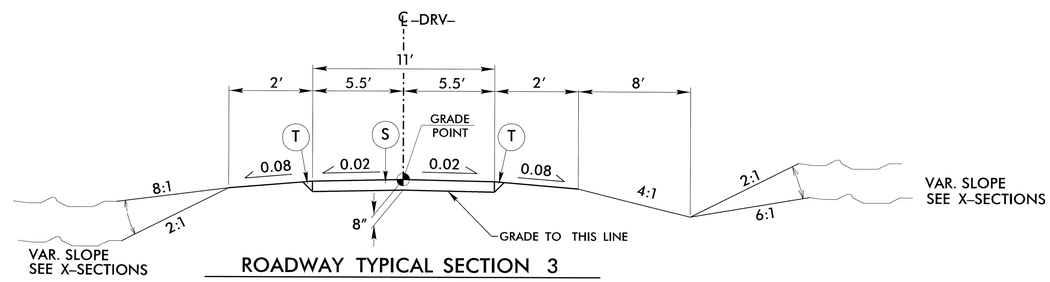

ROADWAY TYPICAL SECTION 3

ROADWAY TYPICAL SECTION 3
-DRV- STA. 10+10.00 TO STA. 10+78.65

8" CONCRETE DRIVEWAY DETAIL

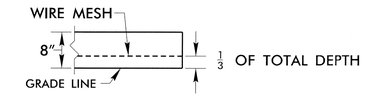

* REPLACE DRIVEWAY BACK TO EXISTING CONDITION

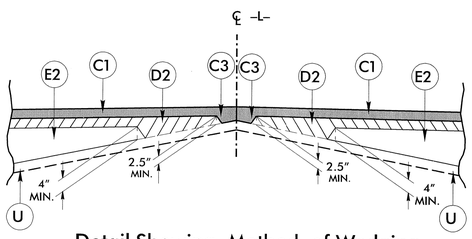

Detail Showing Method of Wedging

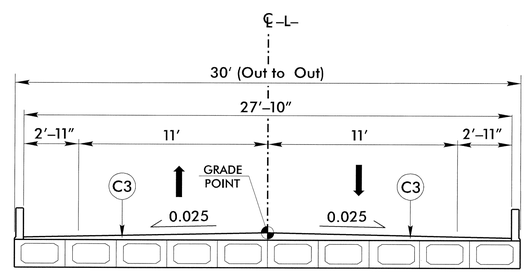

TYPICAL SECTION ON STRUCTURE

STRUCTURE TYPICAL SECTION
-L- STA. 16+24.38 TO STA. 17+21.63

8/17/99

18-JUN-2014 16:25
N:\Proj2014\041665.01 NCDOT Guilford Bridge 27\Roadway\Proj\027_Rdy_typ.dgn
$$$$USERNAME$$$$

STATE OF NORTH CAROLINA
DIVISION OF HIGHWAYS

SUMMARY OF QUANTITIES

STATE OF NORTH CAROLINA
DIVISION OF HIGHWAYS
ROADWAY SUMMARY OF QUANTITIES FOR CONTRACT ???

Item Number	Sec #	Quantity	Unit	Description
0000100000–N	800	1	LS	MOBILIZATION
0030000000–N	SP	1	LS	BRG. APPR. FILL – SUB REG TIER STA. 16+62.00
0050000000–E	226	1	ACR	SUPPLEMENTARY CLEARING & GRUBBING
0063000000–N	SP	1	LS	GRADING
0106000000–E	230	1650	CY	BORROW EXCAVATION
0318000000–E	300	10	TON	FOUNDATION CONDITIONING MATERIAL, MINOR STRUCTURES
0320000000–E	300	30	SY	FOUNDATION CONDITIONING GEOTEXTILE
0335200000–E	305	12	LF	15" DRAINAGE PIPE
0448200000–E	310	56	LF	15" RC PIPE, CLASS IV
1489000000–E	610	165	TON	ASPHALT CONC BASE COURSE, TYPE B25.0B
1498000000–E	610	180	TON	ASPHALT INTERMEDIATE COURSE, TYPE I19.0B
1519000000–E	610	315	TON	ASPHALT CONC SURFACE COURSE, TYPE S9.5B
1575000000–E	620	35	TON	ASPHALT BINDER FOR PLANT MIX
2738000000–E	SP	110	SY	8" CONCRETE DRIVEWAY
2286000000–N	840	3	EA	MASONARY DRAINAGE STRUCTURES
2367000000–N	840	3	EA	FRAME WITH TWO GRATES, STD 840.29
2556000000–E	846	50	LF	SHOULDER BERM GUTTER
3030000000–E	862	75	LF	STEEL BM GUARDRAIL
3045000000–E	862	25	LF	STEEL BM GUARDRAIL, SHOP CURVED
3150000000–N	862	5	EA	ADDITIONAL GUARDRAIL POST
3195000000–N	862	1	EA	GUARDRAIL ANCHOR UNITS, TYPE AT–1
3215000000–N	862	4	EA	GUARDRAIL ANCHOR UNITS, TYPE III
3270000000–N	SP	3	EA	GUARDRAIL ANCHOR UNITS, TYPE 350 TL–3

Item Number	Sec #	Quantity	Unit	Description
3635000000–E	876	40	TON	RIP RAP, CLASS II
3649000000–E	876	6	TON	RIP RAP, CLASS B
3656000000–E	876	471	SY	GEOTEXTILE FOR DRAINAGE
4400000000–E	1110	364	SF	STATIONARY WORK ZONE SIGNS
4410000000–E	1110	94	SF	BARRICADE MOUNTED WORK ZONE SIGNS
4445000000–E	1145	80	LF	BARRICADES (TYPE III)
4685000000–E	1205	1170	LF	THERMOPLASTIC (4", 90 MILS)
4686000000–E	1205	1170	LF	THERMOPLASTIC (4", 120 MILS)
6000000000–E	1605	715	LF	TEMPORARY SILT FENCE
6006000000–E	1610	150	TON	EROSION CONTROL STONE, CLASS A
6009000000–E	1610	150	TON	EROSION CONTROL STONE, CLASS B
6012000000–E	1610	115	TON	SEDIMENT CONTROL STONE
6015000000–E	1615	2.5	ACR	TEMPORARY MULCHING
6018000000–E	1620	200	LB	SEED FOR TEMPORARY SEEDING
6021000000–E	1620	1.0	TON	FERTILIZER FOR TEMPORARY SEEDING
6024000000–E	1622	200	LF	TEMPORARY SLOPE DRAINS
6029000000–E	SP	400	LF	SAFETY FENCE
6030000000–E	1630	40	CY	SILT EXCAVATION
6036000000–E	1631	5500	SY	MATTING FOR EROSION CONTROL
6037000000–E	SP	220	SY	COIR FIBER MAT
6038000000–E	SP	135	SY	PERMANENT SOIL REINFORCEMENT MATTING
6042000000–E	1632	390	LF	1/4" HARDWARE CLOTH
6071020000–E	SP	40	LB	POLYACRYLAMIDE (PAM)
6071030000–E	1640	15	LF	COIR FIBER BAFFLE
6084000000–E	1660	3	ACR	SEEDING AND MULCHING
6087000000–E	1660	3	ACR	MOWING
6090000000–E	1661	50	LB	SEED FOR REPAIR SEEDING

Item Number	Sec #	Quantity	Unit	Description
6093000000–E	1661	0.25	TON	FERTILIZER FOR REPAIR SEEDING
6096000000–E	1662	50	LB	SEED FOR SUPPLEMENTAL SEEDING
6108000000–E	1665	1.5	TON	FERTILIZER TOPDRESSING
6114500000–E	1667	10	MHR	SPECIALIZED HAND MOWING
6117000000–E	SP	25	EA	RESPONSE FOR EROSION CONTROL
6123000000–E	1670	0.10	ACR	REFORESTATION

5/28/99
13-JUN-2014 08:25
R:\Roadway\Proj\027_Rdy_sum.dgn
$$$$USERNAME$$$$

COMPUTED BY: T. CAREY DATE: 7/22/13
CHECKED BY: B. SMITH DATE: 7/23/13

4/04/06

PROJECT REFERENCE NO.	SHEET NO.
41665.3B	3–A

DIVISION OF HIGHWAYS
STATE OF NORTH CAROLINA

NOTE:
APPROXIMATE QUANTITIES ONLY. UNCLASSIFIED EXCAVATION, BORROW EXCAVATION, FINE GRADING, CLEARING AND GRUBBING, AND REMOVAL OF EXISTING PAVEMENT WILL BE PAID FOR AT THE LUM SUM PRICE FOR "GRADING".

SUMMARY OF EARTHWORK IN CUBIC YARDS

STATION	STATION	UNCL. EXCAV.	EMBANK. +%	BORROW	WASTE
–L– 13+85.00	16+24.38 (BR)	5	776	771	
–L– 17+21.63 (BR)	19+70.00	9	622	613	
SUBTOTAL:		14	1398	1384	
–DRV– 10+10.00	10+78.65	3	46	43	
SUBTOTAL:		3	46	43	
PROJECT TOTAL:		17	1444	1427	
EST 5% TO REPLACE TOP SOIL ON BORROW PIT				71	
GRAND TOTAL:		17		1498	
SAY:		20		1650	

Earthwork quantities are calculated by the Roadway Design Unit. These earthwork quantities are based in part on subsurface data provided by the Geotechnical Engineering Unit.

EXISTING PAVEMENT REMOVAL SUMMARY

SURVEY LINE	STATION	STATION	LOCATION LT/RT/CL	YD^2
–L–	14+75.00	15+05.00	CL	93
–L–	18+05.00	18+60.00	CL	116
			TOTAL:	209
			SAY:	220

EXISTING PAVEMENT BREAKUP SUMMARY

SURVEY LINE	STATION	STATION	LOCATION LT/RT/CL	YD^2
–L–	15+05.00	16+25.00	CL	247
–L–	17+20.00	18+05.00	CL	179
			TOTAL:	426
			SAY:	450

SUMMARY OF RIP RAP

LINE	STATION	STATION	LOC	RIP RAP CLASS I	II	A	B	RR (TON)	FF (SY)	PSRM (SY)	DDE (CY)	DETAIL	COMMENTS
–L–	14+50.00	15+56.00	RT							64		A	
–L–	14+50.00	15+60.00	LT							64		A	
–L–	15+55.00		LT				X	2	7				
–L–	15+57.00		RT				X	2	7				
–L–	16+40.00	16+57.00	C		X			40					
–L–	17+65.00		RT				X	2	7				

	TOTAL (TON)	SAY
CLASS I		
CLASS II	40	40
CLASS A		
CLASS B	6	6
SHOT ROCK		
DDE		
	TOTAL (SQ. YD)	SAY
FILTER FABRIC	21	21
PSRM	128	135

ABBREVIATIONS	
CY	CUBIC YARD
DDE	DRAINAGE DITCH EXCAVATION
FF	FILTER FABRIC
PSRM	PERMANENT SOIL REINFORCEMENT MATTING
LOC	LOCATION
RR	RIP RAP
SY	SQUARE YARD

NOTE: Invert Elevations are for Bid Purposes only and shall not be used for project construction stakeout. See "Standard Specifications For Roads and Structures, Section 300–5".

SUB–REGIONAL & REGIONAL LIST OF PIPES, ENDWALLS, ETC. (FOR PIPES 48" & UNDER)

STATION / SIZE / THICKNESS OR GAUGE	LOCATION (LT,RT, OR CL)	STRUCTURE NO. FROM	STRUCTURE NO. TO	TOP ELEVATION	INVERT ELEVATION	INVERT ELEVATION	SLOPE CRITICAL	DRAINAGE PIPE (RCP, CSP, CAAP, HDPE, or PVC) 12"	15"	18"	24"	30"	36"	42"	48"	DO NOT USE RCP	DO NOT USE CSP	DO NOT USE CAAP	DO NOT USE HDPE
–L– 17+35.00	LT	0401		704.7	702.0														
–L– 17+35.00	RT	0402		704.7	701.9														
–L– 17+35.00	CL	0401	0402		702.0	701.9													
–L– 17+65.00	RT	0403		704.9	701.8														
–L– 17+34.00	RT	0402	0403		701.9	701.8													
–L– 17+65.00	RT	0403	0404		701.8	700.9			12′										
SHEET TOTALS									12′										

STATION	C.S. PIPE 12" (.064)	15" (.064)	18" (.064)	24" (.064)	36" (.079)	42" (.109)	48" (.109)	R.C. PIPE (CLASS III) 15"	18"	24"	30"	36"	42"	48"	R.C. PIPE (CLASS IV) 12"	15"	18"	24"	30"	36"	42"	48"
–L– 17+35.00																						
–L– 17+35.00																						
–L– 17+35.00																24′						
–L– 17+65.00																						
–L– 17+34.00																32′						
–L– 17+65.00																						
SHEET TOTALS																56′						

STATION	**" R. C. PIPE (CLASS V)	**" R. C. PIPE CULVERTS, CONTRACTOR DESIGN PIPE	**" R. C. PIPE CULVERTS, CONTRACTOR DESIGN PIPE	15" SIDE DRAIN PIPE	18" SIDE DRAIN PIPE	ENDWALLS STD. 838.01, STD. 838.11 OR STD. 838.80 (UNLESS NOTED OTHERWISE) CU. YDS. R.C.P.	C.S.P.	QUANTITIES FOR DRAINAGE STRUCTURES PER EACH (0' THRU 5.0')	* TOTAL L.F. FOR PAY QUANTITY SHALL BE COL. 'A' + (1.3 X COL.'B') LIN. *FT. A 5.0' THRU 10.0'	B 10.0' AND ABOVE	C.B. STD. 840.01 OR STD. 840.02	FRAME, GRATES AND HOOD STANDARD 840.03 TYPE OF GRATE E	F	G		CONCRETE TRANSITIONAL SECTION CATCH BASIN	DROP INLET	G.D.I. FRAME WITH GRATE STD. 840.20	G.D.I. FRAME WITH GRATE STD. 840.22	G.D.I. FRAME WITH TWO GRATES STD. 840.20	G.D.I. (N.S.) FRAME WITH GRATE STD. 840.24	G.D.I. (N.S.) FRAME WITH TWO GRATES STD. 840.29	T.B.D.I. STD. 840.35	CORR. STEEL ELBOWS NO. & SIZE	CONC. COLLARS CL. "B" C.Y. STD 840.72	MODIFIED CONCRETE FLUME (SEE SHEET 2–B)	PIPE REMOVAL LIN.FT.	REMARKS
–L– 17+35.00								1														1	1					
–L– 17+35.00								1														1	1					
–L– 17+35.00																												
–L– 17+65.00								1														1	1					
–L– 17+34.00																												
–L– 17+65.00																												
SHEET TOTALS								3														3	3					

ABBREVIATIONS

C.B.	CATCH BASIN
N.D.I.	NARROW DROP INLET
D.I.	DROP INLET
G.D.I.	GRATED DROP INLET
G.D.I. (N.S.)	GRATED DROP INLET (NARROW SLOT)
J.B.	JUNCTION BOX
M.H.	MANHOLE
T.B.D.I.	TRAFFIC BEARING DROP INLET
T.B.J.B.	TRAFFIC BEARING JUNCTION BOX

"N" = DISTANCE FROM EDGE OF LANE TO FACE OF GUARDRAIL.
TOTAL SHOULDER WIDTH = DISTANCE FROM EDGE OF TRAVEL LANE TO SHOULDER BREAK POINT.
FLARE LENGTH = DISTANCE FROM LAST SECTION OF PARALLEL GUARDRAIL TO END OF GUARDRAIL.
W = TOTAL WIDTH OF FLARE FROM BEGINNING OF TAPER TO END OF GUARDRAIL.
G = GATING IMPACT ATTENUATOR TYPE 350
NG = NON–GATING IMPACT ATTENUATOR TYPE 350

GUARDRAIL SUMMARY

SURVEY LINE	BEG. STA.	END STA.	LOCATION	LENGTH STRAIGHT	SHOP CURVED	DOUBLE FACED	WARRANT POINT APPROACH END	TRAILING END	"N" DIST. FROM E.O.L.	TOTAL SHOUL. WIDTH	FLARE LENGTH APPROACH END	TRAILING END	W APPROACH END	TRAILING END
–L–	15+43.13	16+24.38 (Bridge)	RIGHT	81.25′			16+24.38 (Bridge)		3.00′	6.00′				
–L–	15+43.13	16+24.38 (Bridge)	LEFT	81.25′				16+24.38 (Bridge)	3.00′	6.00′				
–L–	17+21.63 (Bridge)	(–DRV–) 10+67.00	LEFT	49.62′	22.85′		17+21.63 (Bridge)		3.00′	6.00′				
–L–	17+21.63 (Bridge)	18+02.88	RIGHT	81.25′				17+21.63 (Bridge)	3.00′	6.00′				
			SUBTOTAL	293.37′										
		LESS ANCHOR DEDUCTIONS:												
		GRAU 350 TL–3	3 @ 50.00′ =	–150.00′										
		TYPE III	4 @ 18.75′ =	–75.00′										
		AT–1	1 @ 6.25′ =		–6.25′									
		ANCHOR DEDUCTION TOTAL:		–225.00′	–6.25′									
			PROJECT TOTAL	68.37′	16.60′									
			SAY	75.00′	25.00′									
		ADDITIONAL GUARDRAIL POST =		5										

SURVEY LINE / ROW	ANCHORS XI MOD	B–77	GRAU 350 TL–3	M–350	TYPE III	CAT–1	VI MOD	GRAU 350 TL–2	AT–1	TEMP. CRASH CUSHIONS EA	G	NG	SINGLE FACED GUARDRAIL	REMOVE EXISTING GUARDRAIL	REMOVE AND STOCKPILE EXISTING GUARDRAIL	REMARKS
–L– 15+43.13 RIGHT			1		1											
–L– 15+43.13 LEFT			1		1											
–L– 17+21.63 LEFT					1				1							
–L– 17+21.63 RIGHT			1		1											
PROJECT TOTAL			3		4	1										
SAY			3		4	1										

2:30:11 PM
027_Rdy_sum.dgn
Division

8/17/99

PROJECT REFERENCE NO.	SHEET NO.
41665.3B	4
R/W SHEET NO.	

ROADWAY DESIGN ENGINEER — NORTH CAROLINA PROFESSIONAL SEAL 034375 ENGINEER BARRY C. SMITH

HYDRAULICS ENGINEER — NORTH CAROLINA PROFESSIONAL SEAL 022000 ENGINEER W. GALEN OAKLEY

KCI http://www.kci.com
Engineers • Planners • Scientists • Construction Managers
4601 Six Forks Road, Landmark Center II, Suite 220
Raleigh, NC 27609-5210
Phone (919) 783-9214 • Fax (919) 783-9266

FOR -L- PROFILE, SEE SHEET 5

DATUM DESCRIPTION

THE LOCALIZED COORDINATE SYSTEM DEVELOPED FOR THIS PROJECT IS BASED ON THE STATE PLANE COORDINATES ESTABLISHED BY NCDOT FOR MONUMENT "400027-2"
WITH NAD 83/NA 2011 STATE PLANE GRID COORDINATES OF
NORTHING: 806863.0220(ft) EASTING: 1743993.5080(ft)
ELEVATION: 699.40'(ft)
THE AVERAGE COMBINED GRID FACTOR USED ON THIS PROJECT (GROUND TO GRID) IS: 0.9999211389
THE N.C. LAMBERT GRID BEARING AND LOCALIZED HORIZONTAL GROUND DISTANCE FROM "400027-2" TO -L- STATION 13+85.00 IS
N 23° 54' 24.8" W 249.96 ft
ALL LINEAR DIMENSIONS ARE LOCALIZED HORIZONTAL DISTANCES
VERTICAL DATUM USED IS NAVD 88

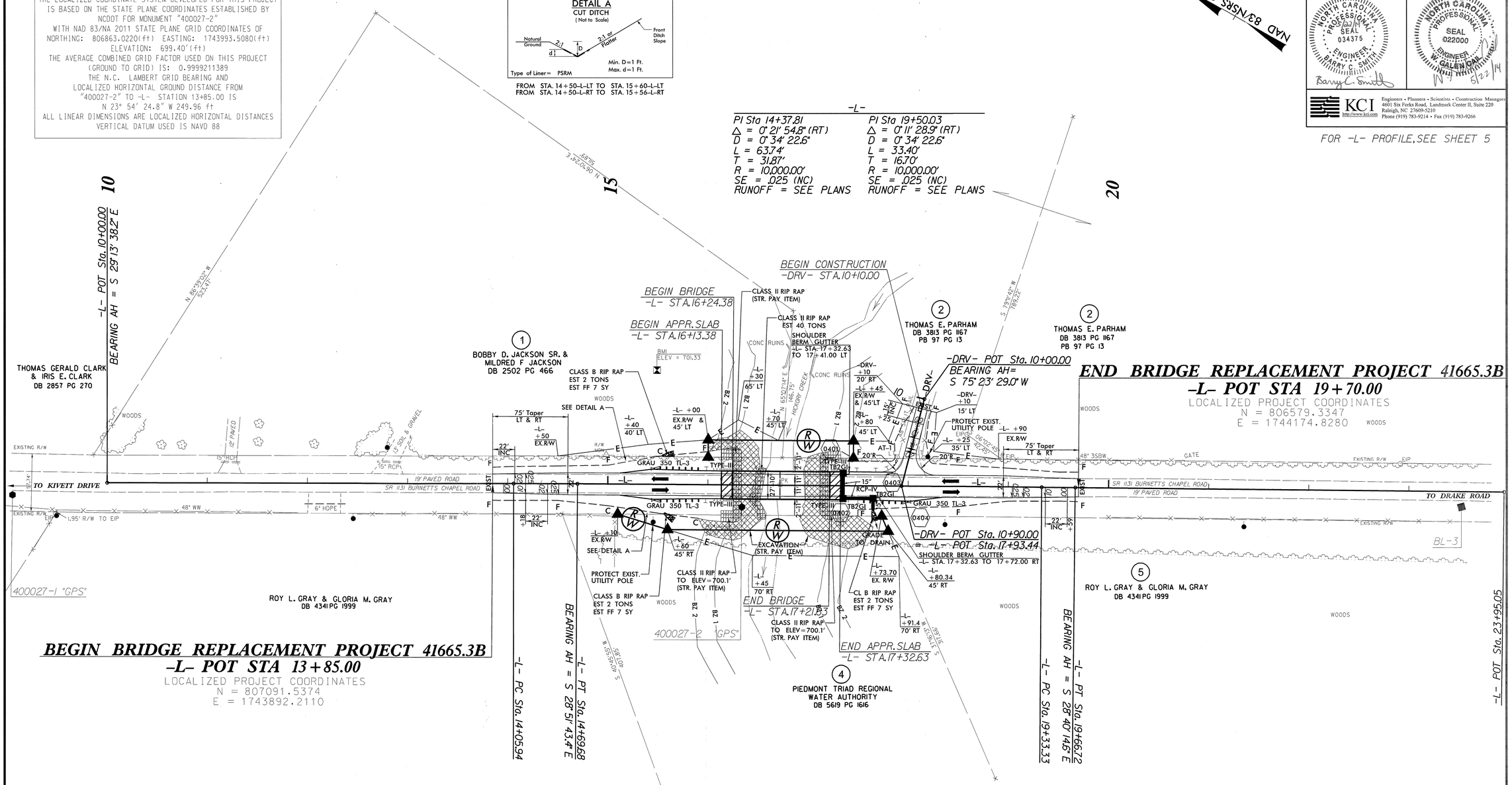

END BRIDGE REPLACEMENT PROJECT 41665.3B
-L- POT STA 19+70.00
LOCALIZED PROJECT COORDINATES
N = 806579.3347
E = 1744174.8280

BEGIN BRIDGE REPLACEMENT PROJECT 41665.3B
-L- POT STA 13+85.00
LOCALIZED PROJECT COORDINATES
N = 807091.5374
E = 1743892.2110

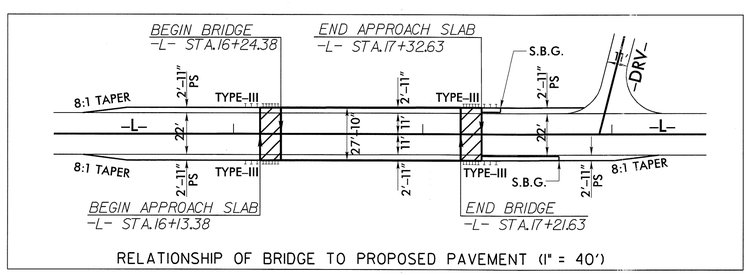

RELATIONSHIP OF BRIDGE TO PROPOSED PAVEMENT (1" = 40')

BASELINE DATA

BL

POINT	DESC.	NORTH	EAST	ELEVATION	L STATION	OFFSET
1	400027-1	807503.9560	1743647.3050	743.61	10+00.00	12.35 RT
2	400027-2	806863.0220	1743993.5080	699.24	16+34.03	21.93 RT
3	BL-3	806236.3563	1744344.9702	728.16	23+52.56	15.27 RT

BENCHMARK DATA

BM1 ELEVATION - 701.33
N 807004 E 1744071
L STATION 15+48.35, 114' LEFT
RR SPIKE IN BASE OF 15" WHITE OAK

22-MAY-2014 11:22
N:\2012\2023395.01 NCDOT Guilford Bridge 27\Roadway\Proj\027_Rdy_psh_s4.dgn
N:\2012\2023395.01\Hydraulics\

PROJECT REFERENCE NO.	SHEET NO.
41665.3B	5

ROADWAY DESIGN ENGINEER
NORTH CAROLINA PROFESSIONAL SEAL 034375 ENGINEER BARRY C. SMITH
Barry C. Smith

HYDRAULICS ENGINEER
NORTH CAROLINA PROFESSIONAL SEAL 022000 ENGINEER W. GALEN CAIL
5/27/14

KCI
http://www.kci.com
Engineers • Planners • Scientists • Construction Managers
4601 Six Forks Road, Landmark Center II, Suite 220
Raleigh, NC 27609-5210
Phone (919) 783-9214 • Fax (919) 783-9266

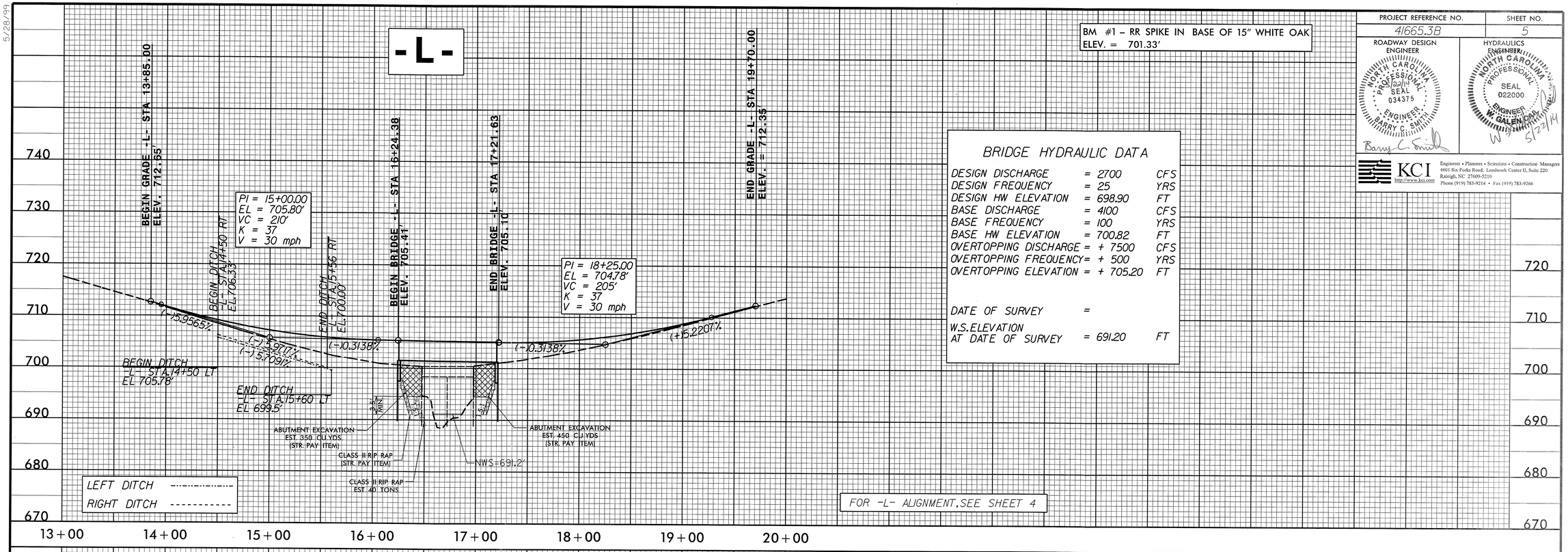

BRIDGE HYDRAULIC DATA

DESIGN DISCHARGE	= 2700	CFS
DESIGN FREQUENCY	= 25	YRS
DESIGN HW ELEVATION	= 698.90	FT
BASE DISCHARGE	= 4100	CFS
BASE FREQUENCY	= 100	YRS
BASE HW ELEVATION	= 700.82	FT
OVERTOPPING DISCHARGE	= + 7500	CFS
OVERTOPPING FREQUENCY	= + 500	YRS
OVERTOPPING ELEVATION	= + 705.20	FT
DATE OF SURVEY	=	
W.S.ELEVATION AT DATE OF SURVEY	= 691.20	FT

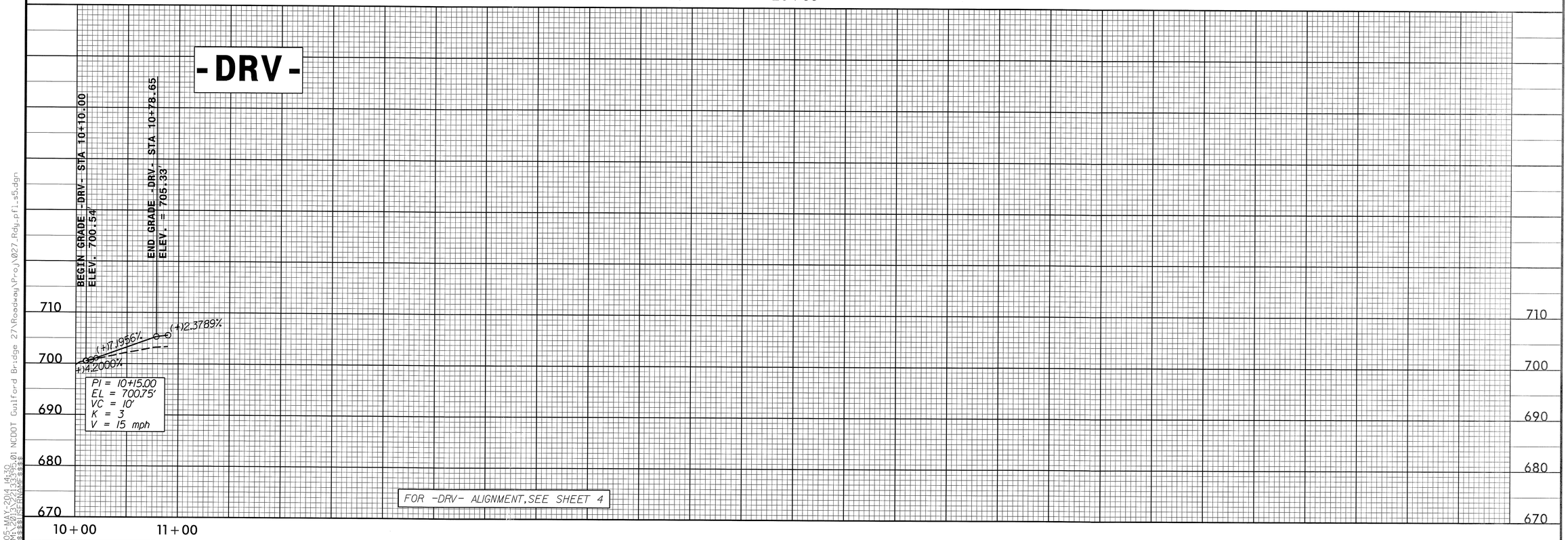

05-MAY-2014 14:32
M:\MAS\21313336.01 NCDOT Guilford Bridge 27\Roadway\Proj\027_Rdy_pfl_s5.dgn
$$$$USERNAME$$$$
5/28/99

STATE OF NORTH CAROLINA
DIVISION OF HIGHWAYS

TRANSPORTATION MANAGEMENT PLAN

GUILFORD COUNTY

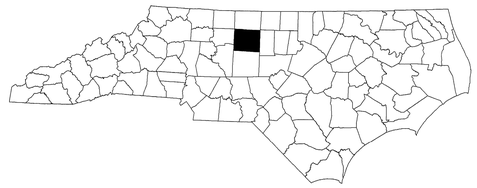

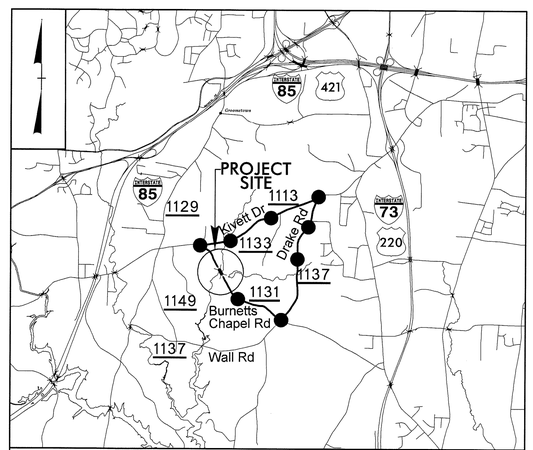

VICINITY MAP

DETOUR ROUTE

LOCATION: BRIDGE NO. 400027 OVER HICKORY CREEK ON SR 1131 (BURNETTS CHAPEL ROAD)

TYPE OF WORK: GRADING, DRAINAGE, PAVING, AND STRUCTURE

INDEX OF SHEETS

SHEET NO.	TITLE
TMP-1	TITLE SHEET, VICINITY MAP, AND INDEX OF SHEETS
TMP-1A	LIST OF APPLICABLE ROADWAY STANDARD DRAWINGS AND LEGEND
TMP-1B	TRANSPORTATION OPERATIONS PLAN: (MANAGEMENT STRATEGIES, GENERAL NOTES, LOCAL NOTES AND PHASING)
TMP-2	SPECIAL SIGN DESIGN
TMP-3	OFF-SITE DETOUR
TMP-4	ROAD CLOSURE

SHEET NO.
TMP-1

41665.3B

PROJECT:

WORK ZONE SAFETY & MOBILITY
"from the MOUNTAINS to the COAST"

N.C.D.O.T. WORK ZONE TRAFFIC CONTROL
1561 MAIL SERVICE CENTER (MSC) RALEIGH, NC 27699-1561
750 N. GREENFIELD PARKWAY, GARNER, NC 27529 (DELIVERY)
PHONE: (919) 773-2800 FAX: (919) 771-2745

J. S. BOURNE, P.E. — STATE TRAFFIC MANAGEMENT ENGINEER

J. ISHAK, P.E. — TRAFFIC CONTROL PROJECT ENGINEER

_____ TRAFFIC CONTROL PROJECT DESIGN ENGINEER

_____ TRAFFIC CONTROL DESIGN ENGINEER

DIVISION OF HIGHWAYS
STATE OF NORTH CAROLINA
DEPARTMENT OF TRANSPORTATION
WORK ZONE TRAFFIC CONTROL

SEPI ENGINEERING & CONSTRUCTION
1025 Wade Avenue
Raleigh, NC 27605
Tel:919-789-9977
Fax:919-789-9591
License: C-2197

APPROVED: [signature]
DATE: 5-22-14

SEAL

NORTH CAROLINA PROFESSIONAL SEAL 037026 ENGINEER STEVEN D. MILLER

$$$$SYSTIME$$$$
$$$$USERNAME$$$$
$$$$DGN$$$$

PROJ. REFERENCE NO.	SHEET NO.
41665.3B	TMP-1A

ROADWAY STANDARD DRAWINGS

THE FOLLOWING ROADWAY STANDARDS AS SHOWN IN "ROADWAY STANDARD DRAWINGS" - PROJECT SERVICES UNIT - N.C. DEPARTMENT OF TRANSPORTATION - RALEIGH, N.C., DATED JANUARY 2012 ARE APPLICABLE TO THIS PROJECT AND BY REFERENCE HEREBY ARE CONSIDERED A PART OF THESE PLANS:

STD. NO.	TITLE
1101.03	TEMPORARY ROAD CLOSURES
1101.05	WORK ZONE VEHICLE ACCESSES
1101.11	TRAFFIC CONTROL DESIGN TABLES
1110.01	STATIONARY WORK ZONE SIGNS
1145.01	BARRICADES-TYPE III

LEGEND

GENERAL

- DIRECTION OF TRAFFIC FLOW
- DIRECTION OF PEDESTRIAN TRAFFIC FLOW
- EXIST. PVMT.
- NORTH ARROW
- PROPOSED PVMT.
- TEMP. SHORING (LOCATION PURPOSES ONLY)
- WORK AREA
- REMOVAL
- USER DEFINED (IF NEEDED)
- USER DEFINED (IF NEEDED)

SIGNALS

- EXISTING
- PROPOSED
- TEMPORARY (TEMP)

PAVEMENT MARKINGS

- EXISTING LINES
- TEMPORARY LINES

TRAFFIC CONTROL DEVICES

- BARRICADE (TYPE III)
- CONE
- DRUM
- SKINNY DRUM
- TUBULAR MARKER
- TEMPORARY CRASH CUSHION
- FLASHING ARROW BOARD
- FLAGGER
- LAW ENFORCEMENT
- TRUCK MOUNTED ATTENUATOR (TMA)
- CHANGEABLE MESSAGE SIGN

TEMPORARY SIGNING

- PORTABLE SIGN
- STATIONARY SIGN
- STATIONARY OR PORTABLE SIGN

PAVEMENT MARKERS

- CRYSTAL/CRYSTAL
- CRYSTAL/RED
- YELLOW/YELLOW

PAVEMENT MARKING SYMBOLS

- PAVEMENT MARKING SYMBOLS

APPROVED: [signature] DATE: 5-22-14

SEAL

NORTH CAROLINA PROFESSIONAL SEAL 037026 ENGINEER STEVEN D. MILLER

DIVISION OF HIGHWAYS STATE OF NORTH CAROLINA DEPARTMENT OF TRANSPORTATION WORK ZONE TRAFFIC CONTROL

ROADWAY STANDARD DRAWINGS & LEGEND

$$$$$$SYSTIME$$$$$
$$$$$$USERNAME$$$$DGN$$$$$$$$$$$$$$$$$$

PROJ. REFERENCE NO.	SHEET NO.
41665.3B	TMP-1B

MANAGEMENT STRATEGIES

-CLOSE SR 1131 (BURNETTS CHAPEL ROAD) AND DETOUR TRAFFIC OFF-SITE

-LOCAL ACCESS TO ALL RESIDENCES AND BUSINESSES WILL BE MAINTAINED BETWEEN CLOSURE POINTS AT ALL TIMES DURING CONSTRUCTION

GENERAL NOTES

CHANGES MAY BE REQUIRED WHEN PHYSICAL DIMENSIONS IN THE DETAIL DRAWINGS, STANDARD DETAILS, AND ROADWAY DETAILS ARE NOT ATTAINABLE TO MEET FIELD CONDITIONS OR RESULT IN DUPLICATE OR UNDESIRED OVERLAPPING OF DEVICES. MODIFICATION MAY INCLUDE: MOVING, SUPPLEMENTING, COVERING, OR REMOVAL OF DEVICES AS DIRECTED BY THE ENGINEER.

THE FOLLOWING GENERAL NOTES APPLY AT ALL TIMES FOR THE DURATION OF THE CONSTRUCTION PROJECT EXCEPT WHEN OTHERWISE NOTED IN THE PLAN OR DIRECTED BY THE ENGINEER.

SIGNING

A) PROVIDE SIGNING AND DEVICES REQUIRED TO CLOSE THE ROAD ACCORDING TO THE ROADWAY STANDARD DRAWINGS AND TRAFFIC MANAGEMENT PLANS.

PROVIDE SIGNING REQUIRED FOR THE OFF-SITE DETOUR ROUTE AS SHOWN IN THE TRAFFIC MANAGEMENT PLANS.

B) COVER OR REMOVE ALL SIGNS AND DEVICES REQUIRED TO CLOSE THE ROAD WHEN ROAD CLOSURE IS NOT IN OPERATION.

COVER OR REMOVE ALL SIGNS REQUIRED FOR THE OFF-SITE DETOUR WHEN THE DETOUR IS NOT IN OPERATION.

C) ENSURE ALL NECESSARY SIGNING IS IN PLACE PRIOR TO ALTERING ANY TRAFFIC PATTERN.

LOCAL NOTES

1. NOTIFY THE ENGINEER AT LEAST ONE MONTH PRIOR TO ANY TRAFFIC PATTERN ALTERATION.
2. NOTIFY GUILFORD COUNTY SCHOOLS AT LEAST ONE MONTH PRIOR TO ROAD CLOSURE.
3. NOTIFY GUILFORD COUNTY EMERGENCY SERVICES AT LEAST ONE MONTH PRIOR TO ROAD CLOSURE.

PHASING

STEP 1 USING RSD 1101.03 SHEET 1 OF 9, CLOSE BURNETTS CHAPEL ROAD (SR 1131) AND DETOUR TRAFFIC OFF-SITE AS SHOWN ON TMP-3. MAINTAIN ACCESS TO THE DRIVEWAY BETWEEN CLOSURE POINTS.

STEP 2 REMOVE THE EXISTING STRUCTURE.

STEP 3 CONSTRUCT THE PROPOSED STRUCTURE AND ROADWAY.

STEP 4 PLACE FINAL PAVEMENT MARKINGS ACCORDING TO THE PAVEMENT MARKING PLANS.

STEP 5 OPEN BURNETTS CHAPEL ROAD (SR 1131) TO TRAFFIC AND REMOVE ALL TRAFFIC CONTROL DEVICES.

APPROVED: DATE: 5-22-14

SEAL

NORTH CAROLINA PROFESSIONAL SEAL 037026 ENGINEER STEVEN D. MILLER

DIVISION OF HIGHWAYS STATE OF NORTH CAROLINA DEPARTMENT OF TRANSPORTATION WORK ZONE TRAFFIC CONTROL

TRANSPORTATION OPERATIONS PLAN

$$$$$$SYSTIME$$$$
$$$$$$$$$$$$$$$$DGN$$$$$$$$$$$$$$$$$$
$$$$USERNAME$$$$

PROJ. REFERENCE NO.	SHEET NO.
41665.3B	TMP-2

SEPI ENGINEERING & CONSTRUCTION
Sepi Engineering Group
1025 Wade Avenue
Raleigh, NC 27605
Phone: (919)-789-9977
Fax: (919)-789-9591
TRANSPORTATION TRAFFIC SURVEYING ENVIRONMENTAL SITE CIVIL INSPECTIONS CONSTRUCTION

SIGN NUMBER: SP-1
TYPE: D
QUANTITY: SEE PLANS

BACKG COLOR: Fluorescent Orange
COPY COLOR: Black

SIGN WIDTH: 48"
HEIGHT: 24"
TOTAL AREA: 2.7 Sq. Feet

BORDER TYPE: RECESSED
RECESS: 0.5"
WIDTH: 0.75"
RADII: 1.38"

MAT'L: 0.125" (3.2 mm) ALUMINUM
0.079" COMPOSITE

DESIGN BY: R DRAYTON
PROJECT ID: 41665.3B

CHECKED BY: S MILLER
DIV: 7

DATE: Jul 09, 2013

USE NOTES

1. Legend and border shall be direct applied black
2. Background shall be Type VII, VIII, or IX (prismatic) fluorescent orange retroreflective sheeting.

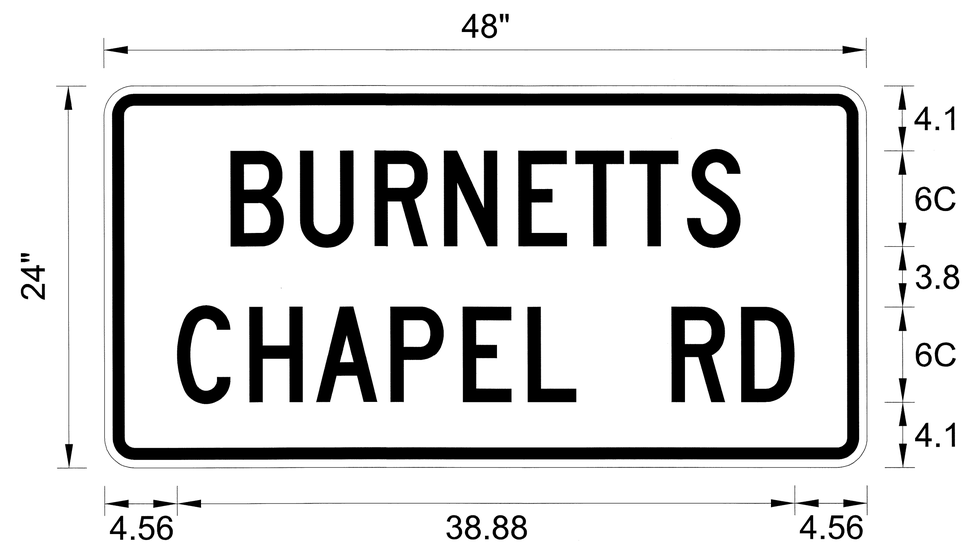

Spacing Factor is 1 unless specified otherwise

LETTER POSITIONS

Letter locations are panel edge to lower left corner

																										Series/Size Text Length
	B	U	R	N	E	T	T	S																		C 2000
	7.95	12.33	17.01	21.39	26.07	29.67	33.09	36.69																		32.1
	C	H	A	P	E	L		R	D																	C 2000
	4.56	9.12	13.32	18	22.56	26.64	29.7	35.7	40.08																	38.88

FILENAME: Sign Design

SEPI ENGINEERING & CONSTRUCTION SIGN DETAIL

APPROVED: [signature] DATE: 5-12-14

SEAL

NORTH CAROLINA PROFESSIONAL SEAL 037026 ENGINEER STEVEN D. MILLER

DIVISION OF HIGHWAYS STATE OF NORTH CAROLINA DEPARTMENT OF TRANSPORTATION WORK ZONE TRAFFIC CONTROL

SPECIAL SIGN DESIGN

$$$$$SYSTIME$$$$$
$$$$$$$$$$$$$$$$DGN$$$$$$$$$$$$$$$$$$$$
$$$USERNAME$$$

PROJ. REFERENCE NO.	SHEET NO.
41665.3B	TMP-3

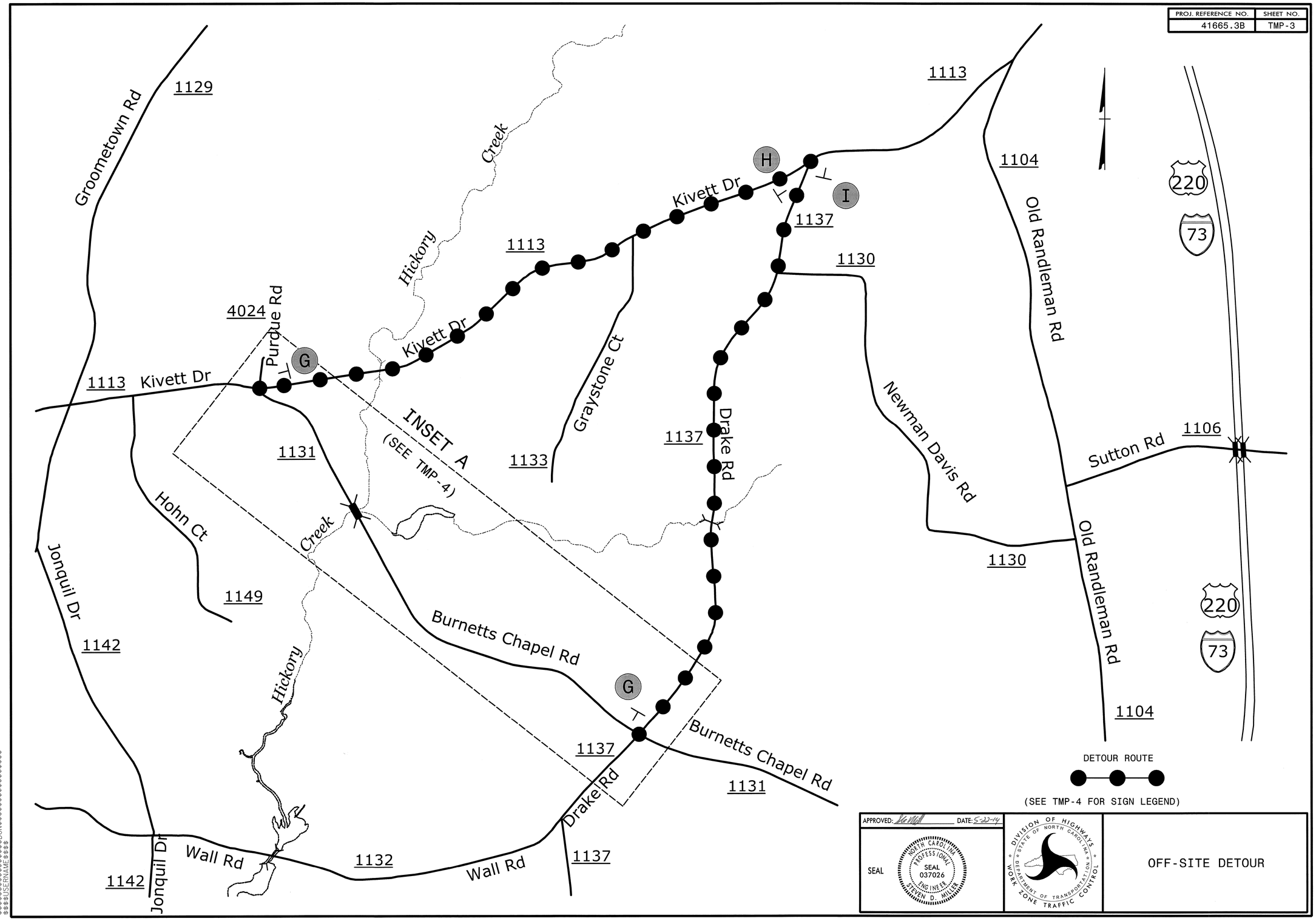

APPROVED: DATE: 5-20-14

SEAL

NORTH CAROLINA PROFESSIONAL SEAL 037026 ENGINEER STEVEN D. MILLER

DIVISION OF HIGHWAYS STATE OF NORTH CAROLINA DEPARTMENT OF TRANSPORTATION WORK ZONE TRAFFIC CONTROL

OFF-SITE DETOUR

$$$$$$$SYSTIME$$$$$$
$$$$$$$$$$$$$$$DGN$$$$$$$$$$$$$$$$$$
$$$$USERNAME$$$$

PROJ. REFERENCE NO.	SHEET NO.
41665.3B	TMP-4

INSET A

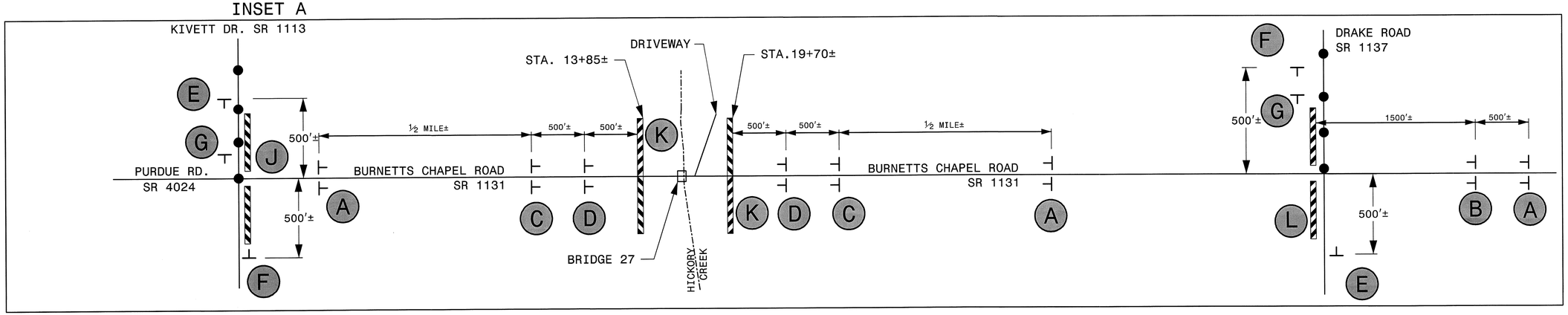

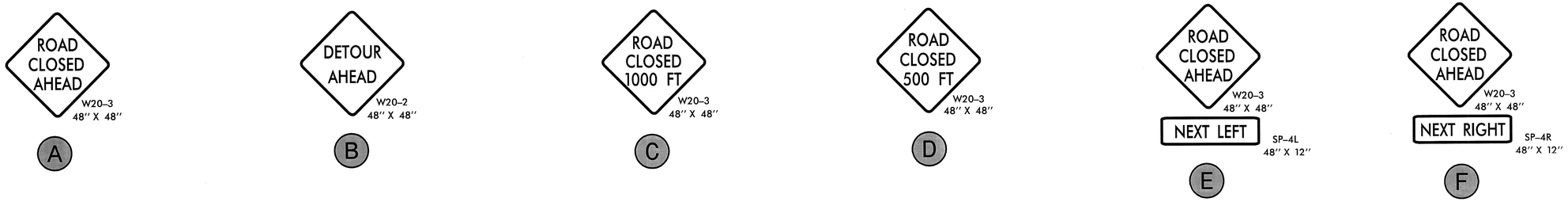

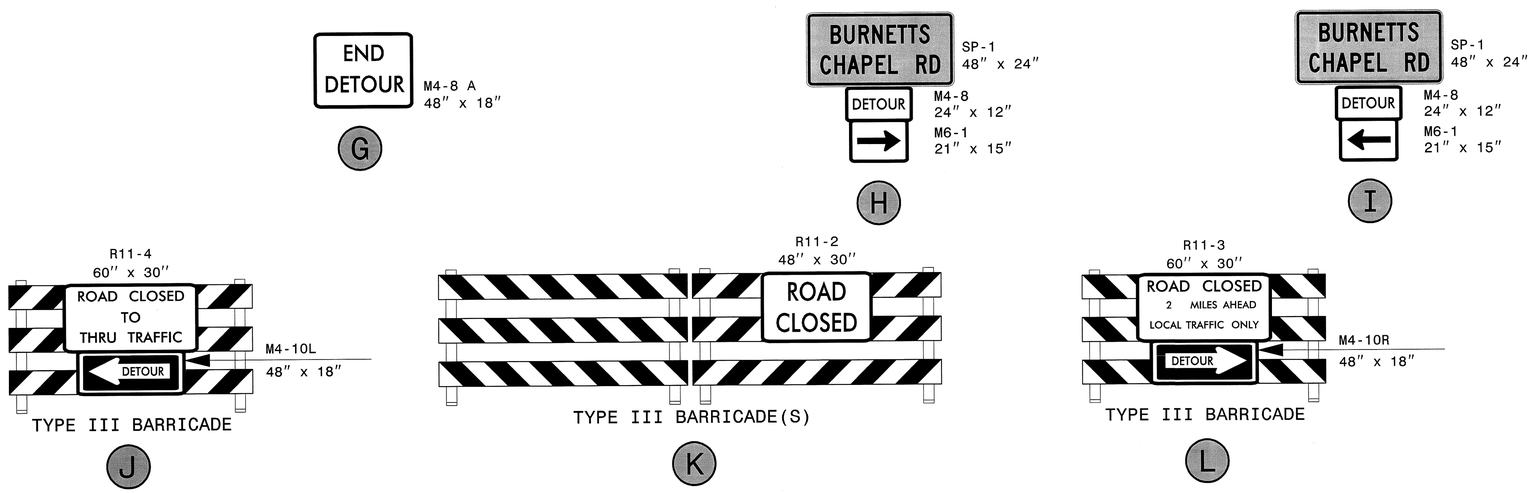

APPROVED: DATE: 5-22-14

SEAL

NORTH CAROLINA PROFESSIONAL SEAL 037026 ENGINEER STEVEN D. MILLER

DIVISION OF HIGHWAYS STATE OF NORTH CAROLINA DEPARTMENT OF TRANSPORTATION WORK ZONE TRAFFIC CONTROL

ROAD CLOSURE

$$$$$$SYSTIME$$$$$$
$$$$$$DATE$$$$$$
$$$$$$DGN$$$$$$
$$$$$$USERNAME$$$$$$

41665.3B

CONTRACT:

TIP NO.	SHEET NO.
41665.3B	PMP-1

APPROVED: SEM

DATE: 5-22-14

SEAL

NORTH CAROLINA PROFESSIONAL SEAL 037026 ENGINEER STEVEN D. MILLER

STATE OF NORTH CAROLINA
DEPARTMENT OF TRANSPORTATION

PAVEMENT MARKING PLAN
GUILFORD COUNTY
LOCATION: BRIDGE NO. 400027 OVER HICKORY CREEK ON SR 1131 (BURNETTS CHAPEL ROAD)

ROADWAY STANDARD DRAWING

THE FOLLOWING ROADWAY STANDARDS AS APPEAR IN "ROADWAY STANDARD DRAWINGS" - PROJECT SERVICES UNIT - N.C. DEPARTMENT OF TRANSPORTATION - RALEIGH, N.C., DATED JANUARY 2012 ARE APPLICABLE TO THIS PROJECT AND BY REFERENCE HEREBY ARE CONSIDERED A PART OF THESE PLANS:

STD. NO.	TITLE
1205.01	PAVEMENT MARKINGS - LINE TYPES AND OFFSETS
1205.02	PAVEMENT MARKINGS - TWO-LANE AND MULTILANE ROADWAYS
1205.12	PAVEMENT MARKINGS - BRIDGES
1250.01	RAISED PAVEMENT MARKERS - INSTALLATION SPACING
1251.01	RAISED PAVEMENT MARKERS - PERMANENT AND TEMPORARY
1253.01	RAISED PAVEMENT MARKERS - SNOWPLOWABLE
1261.01	GUARDRAIL AND BARRIER DELINEATORS - INSTALLATION SPACING
1261.02	GUARDRAIL AND BARRIER DELINEATORS - TYPES AND MOUNTING
1262.01	GUARDRAIL END DELINEATION

GENERAL NOTES

THE FOLLOWING GENERAL NOTES APPLY AT ALL TIMES FOR THE DURATION OF THE CONSTRUCTION PROJECT, EXCEPT WHEN OTHERWISE NOTED IN THE PLAN, OR DIRECTED BY THE ENGINEER.

A) INSTALL PAVEMENT MARKINGS AND PAVEMENT MARKERS ON THE FINAL SURFACE AS FOLLOWS:

ROAD NAME	MARKING	MARKER
BURNETTS CHAPEL ROAD (SR 1131)	THERMOPLASTIC	RAISED SNOWPLOWABLE

B) TIE PROPOSED PAVEMENT MARKING LINES TO EXISTING PAVEMENT MARKING LINES.

C) REMOVE/REPLACE ANY CONFLICTING/DAMAGED PAVEMENT MARKINGS AND MARKERS.

INDEX

SHEET NO.	DESCRIPTION
PMP-1	PAVEMENT MARKING PLAN TITLE SHEET
PMP-2	PAVEMENT MARKING DETAIL AND SCHEDULE SHEET

PLAN PREPARED BY: N.C.D.O.T. SIGNING AND DELINEATION UNIT

SUSAN KUNZ — SIGNING & DELINEATION REGIONAL ENGINEER

SIGNING & DELINEATION PROJECT DESIGN ENGINEER/TECHNICIAN

STATE OF NORTH CAROLINA DEPARTMENT OF TRANSPORTATION

PLAN PREPARED BY: SEPI ENGINEERING & CONSTRUCTION

TONY HARRIS — PROJECT ANALYST

STEVE MILLER, PE — TRANSPORTATION ENGINEER

SEPI ENGINEERING & CONSTRUCTION
1025 Wade Avenue
Raleigh, NC 27605
Tel:919-789-9977
Fax:919-789-9591
License: C-2197

$$$$SYSTIME$$$$
$$$$$$$$$$$$$$$DGN$$$$$$$$$$$$$$$$$$$$
$$$$USERNAME$$$$

TIP NO.	SHEET NO.
41665.3B	PMP-2

APPROVED: [illegible]

DATE: 5-22-14

SEAL

NORTH CAROLINA PROFESSIONAL SEAL 037026 ENGINEER STEVEN D. MILLER

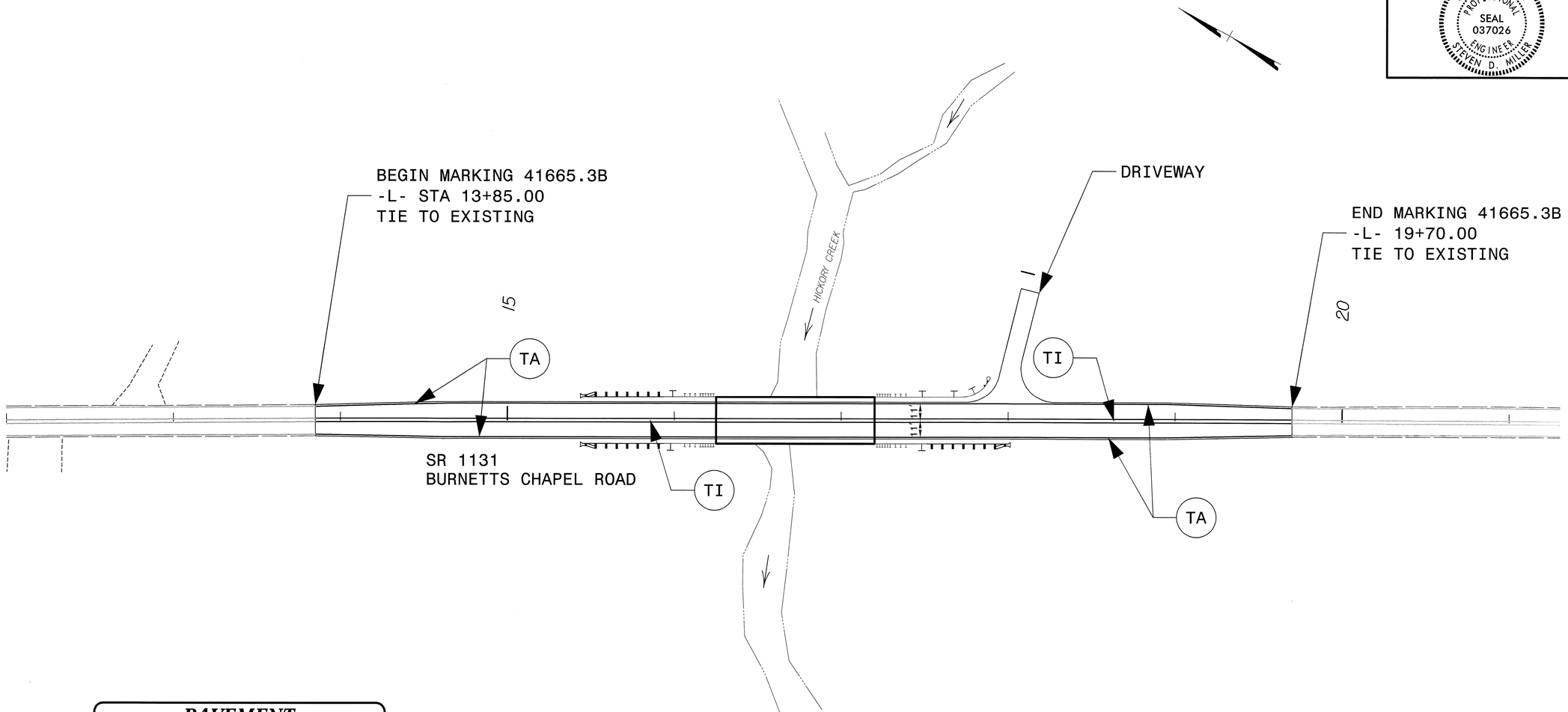

PAVEMENT MARKING SCHEDULE

SYMBOL	DESCRIPTION
	THERMOPLASTIC (4", 120 MILS)
TI	YELLOW DOUBLE CENTER
	THERMOPLASTIC (4", 90 MILS)
TA	WHITE EDGELINE

$$$$$SYSTIME$$$$
$$$$$$$$$$$$$$DGN$$$$$$$$$$$$$$$$$$$$
$$$$USERNAME$$$$

PAVEMENT MARKING DETAIL AND SCHEDULE SHEET

TIP PROJECT: 41665.3B

STATE	STATE PROJECT REFERENCE NO.	SHEET NO.	TOTAL SHEETS
N.C.	41665.3B	EC-1	

STATE PROJ. NO.	F. A. PROJ. NO.	DESCRIPTION

STATE OF NORTH CAROLINA
DIVISION OF HIGHWAYS

PLAN FOR PROPOSED
HIGHWAY EROSION CONTROL

GUILFORD COUNTY

LOCATION: BRIDGE NO. 400027 OVER HICKORY CREEK ON SR 1131 (BURNETTS CHAPEL ROAD)

TYPE OF WORK: GRADING, DRAINAGE, PAVING, AND STRUCTURE

4

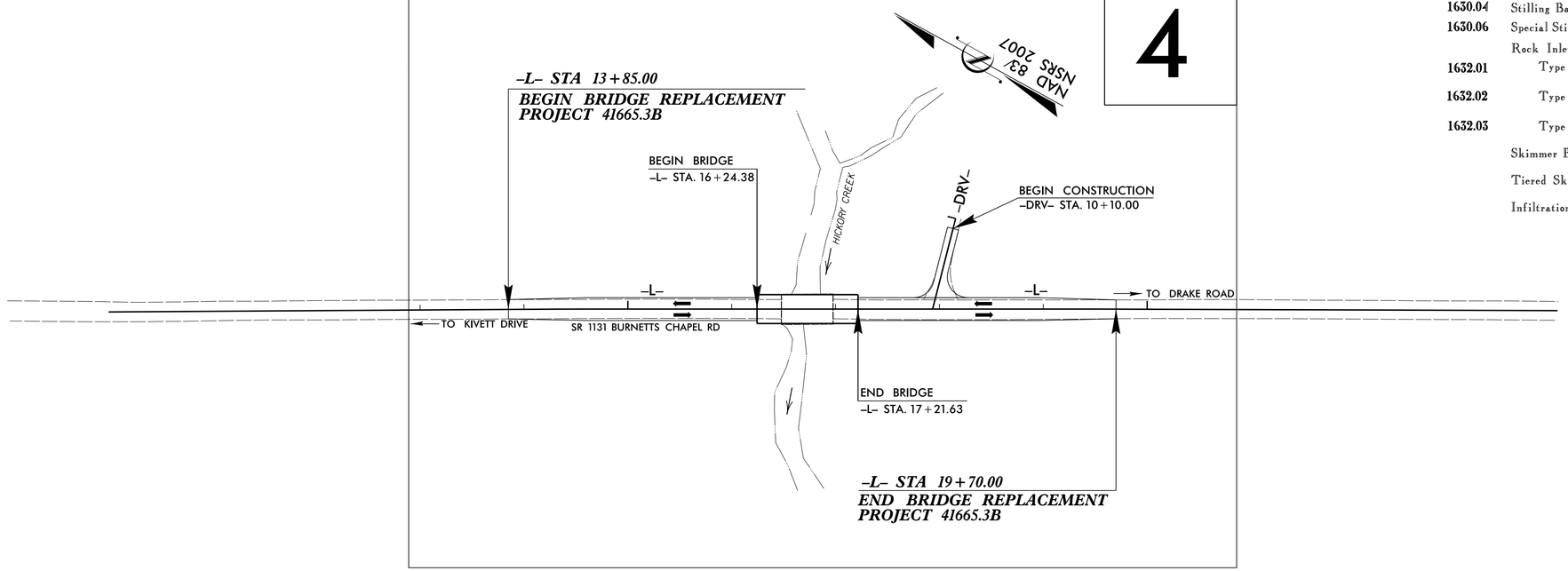

EROSION AND SEDIMENT CONTROL MEASURES

Std. #	Description	Symbol
1630.03	Temporary Silt Ditch	TSD
1630.05	Temporary Diversion	TD
1605.01	Temporary Silt Fence	
1606.01	Special Sediment Control Fence	
1622.01	Temporary Berms and Slope Drains	
1630.02	Silt Basin Type B	
1633.01	Temporary Rock Silt Check Type-A	
	Temporary Rock Silt Check Type-A with Matting and Polyacrylamide (PAM)	
1633.02	Temporary Rock Silt Check Type-B	
	Wattle / Coir Fiber Wattle	EW CFW
	Wattle / Coir Fiber Wattle with Polyacrylamide (PAM)	
1634.01	Temporary Rock Sediment Dam Type-A	
1634.02	Temporary Rock Sediment Dam Type-B	
1635.01	Rock Pipe Inlet Sediment Trap Type-A	
1635.02	Rock Pipe Inlet Sediment Trap Type-B	
1630.04	Stilling Basin	
1630.06	Special Stilling Basin	
	Rock Inlet Sediment Trap:	
1632.01	Type A	A
1632.02	Type B	B
1632.03	Type C	C
	Skimmer Basin	
	Tiered Skimmer Basin	
	Infiltration Basin	

THIS PROJECT CONTAINS EROSION CONTROL PLANS FOR CLEARING AND GRUBBING PHASE OF CONSTRUCTION.

THIS PROJECT HAS BEEN DESIGNED TO SENSITIVE WATERSHED STANDARDS.

ENVIRONMENTALLY SENSITIVE AREA(S) EXIST ON THIS PROJECT

Refer To E. C. Special Provisions for Special Considerations.

GRAPHIC SCALE

0
PLANS

0
PROFILE (HORIZONTAL)

0
PROFILE (VERTICAL)

ROADSIDE ENVIRONMENTAL UNIT
DIVISION OF HIGHWAYS
STATE OF NORTH CAROLINA

THESE EROSION AND SEDIMENT CONTROL PLANS COMPLY WITH THE REGULATIONS SET FORTH BY THE NCG–010000 GENERAL CONSTRUCTION PERMIT EFFECTIVE AUGUST 3, 2011 ISSUED BY THE NORTH CAROLINA DEPARTMENT OF ENVIRONMENT AND NATURAL RESOURCES DIVISION OF WATER QUALITY.

Prepared in the Office of:

ROADSIDE ENVIRONMENTAL UNIT

1 South Wilmington St.
Raleigh, NC 27611

2012 STANDARD SPECIFICATIONS

Roadway Standard Drawings

The following roadway english standards as appear in "Roadway Standard Drawings"– Roadway Design Unit – N. C. Department of Transportation – Raleigh, N. C., dated January 2012 and the latest revison thereto are applicable to this project and by reference hereby are considered a part of these plans.

1604.01	Railroad Erosion Control Detail	1632.01	Rock Inlet Sediment Trap Type A
1605.01	Temporary Silt Fenee	1632.02	Rock Inlet Sediment Trap Type B
1606.01	Special Sediment Control Fence	1632.03	Rock Inlet Sediment Trap Type C
1607.01	Gravel Construction Entrance	1633.01	Temporary Rock Silt Cheek Type A
1622.01	Temporary Berms and Slope Drains	1633.02	Temporary Rock Silt Cheek Type B
1630.01	Riser Basin	1634.01	Temporary Rock Sediment Dam Type A
1630.02	Silt Basin Type B	1634.02	Temporary Rock Sediment Dam Type B
1630.03	Temporary Silt Diteh	1635.01	Rock Pipe Inlet Sediment Trap Type A
1630.04	Stilling Basin	1635.02	Rock Pipe Inlet Sediment Trap Type B
1630.05	Temporary Diversion	1640.01	Coir Fiber Baffle
1630.06	Special Stilling Basin	1645.01	Temporary Stream Crossing
1631.01	Matting Installation		

06-JUN-2014 09:30
er\Documents\DivisionOfHighways\Active\Guilford #27\EC\027_EC_tsh_sl.dgn
w_johnson1 ALT REN v27.tb

PROJECT REFERENCE NO.	SHEET NO.
41665.3B	EC-2
R/W SHEET NO.	
ROADWAY DESIGN ENGINEER	HYDRAULICS ENGINEER

TEMPORARY ROCK SILT CHECK TYPE 'A' WITH EXCELSIOR MATTING AND POLYACRYLAMIDE (PAM)

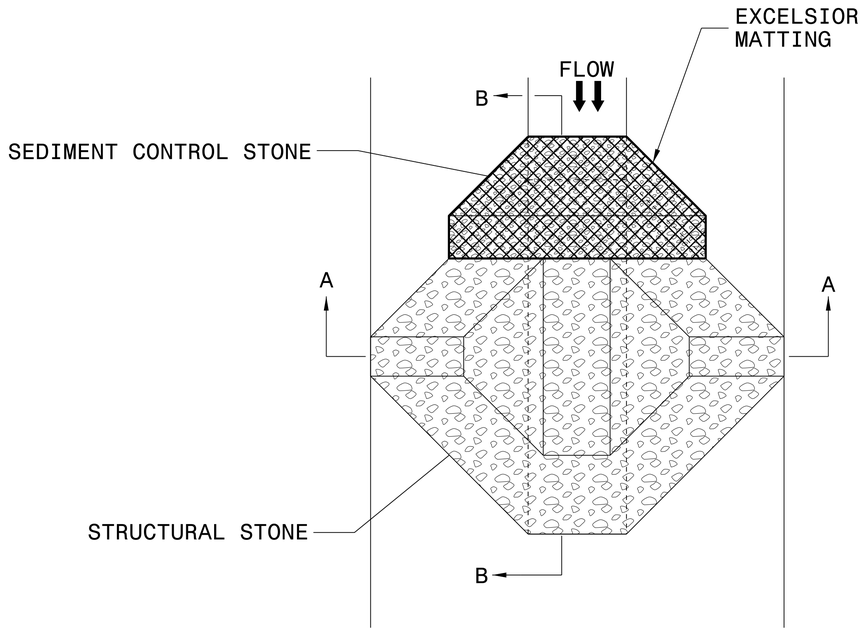

PLAN

NOTES:

INSTALL TEMPORARY ROCK SILT CHECK TYPE A IN ACCORDANCE WITH ROADWAY STANDARD DRAWING NO. 1633.01.

USE EXCELSIOR FOR MATTING MATERIAL AND ANCHOR MATTING SECTION AT TOP AND BOTTOM WITH CLASS B STONE.

PRIOR TO POLYACRYLAMIDE (PAM) APPLICATION, OBTAIN A SOIL SAMPLE FROM PROJECT LOCATION, AND FROM OFFSITE MATERIAL, AND ANALYZE FOR APPROPRIATE PAM FLOCCULANT TO BE APPLIED TO EACH ROCK SILT CHECK.

INITIALLY APPLY 4 OUNCES OF POLYACRYLAMIDE (PAM) TO TOP OF MATTING SECTION AND AFTER EVERY RAINFALL EVENT THAT EQUALS OR EXCEEDS 0.50 INCHES.

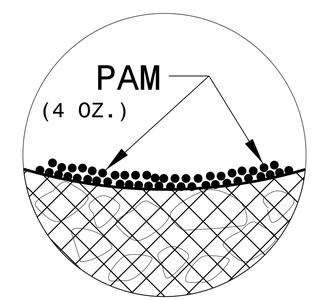

INSET A

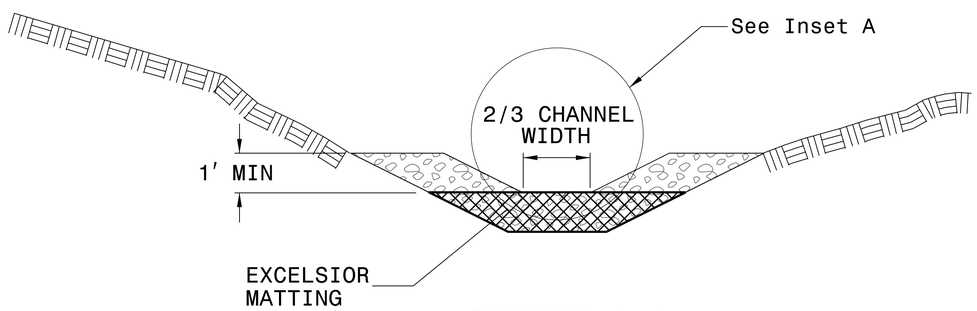

SECTION A-A

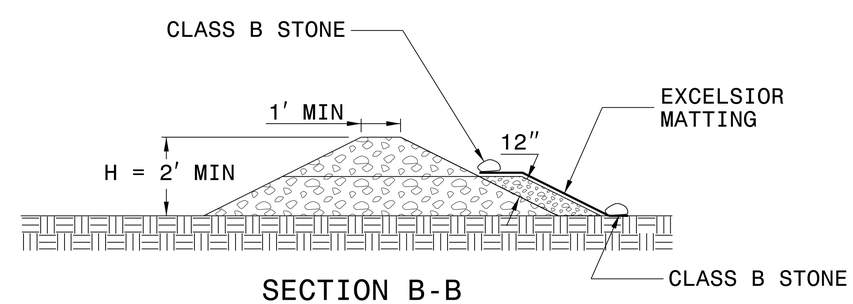

SECTION B-B

NOT TO SCALE

PROJECT REFERENCE NO.	SHEET NO.
41665.3B	EC-3
ROADWAY DESIGN ENGINEER	HYDRAULICS ENGINEER

DIVISION OF HIGHWAYS
STATE OF NORTH CAROLINA

SOIL STABILIZATION TIMEFRAMES

SITE DESCRIPTION	STABILIZATION TIME	TIMEFRAME EXCEPTIONS
PERIMETER DIKES, SWALES, DITCHES AND SLOPES	7 DAYS	NONE
HIGH QUALITY WATER (HQW) ZONES	7 DAYS	NONE
SLOPES STEEPER THAN 3:1	7 DAYS	IF SLOPES ARE 10' OR LESS IN LENGTH AND ARE NOT STEEPER THAN 2:1, 14 DAYS ARE ALLOWED.
SLOPES 3:1 OR FLATTER	14 DAYS	7 DAYS FOR SLOPES GREATER THAN 50' IN LENGTH.
ALL OTHER AREAS WITH SLOPES FLATTER THAN 4:1	14 DAYS	NONE, EXCEPT FOR PERIMETERS AND HQW ZONES.

PROJECT REFERENCE NO.	SHEET NO.
41665.3B	EC-4/CONST.4
R/W SHEET NO.	
ROADWAY DESIGN ENGINEER	HYDRAULICS ENGINEER

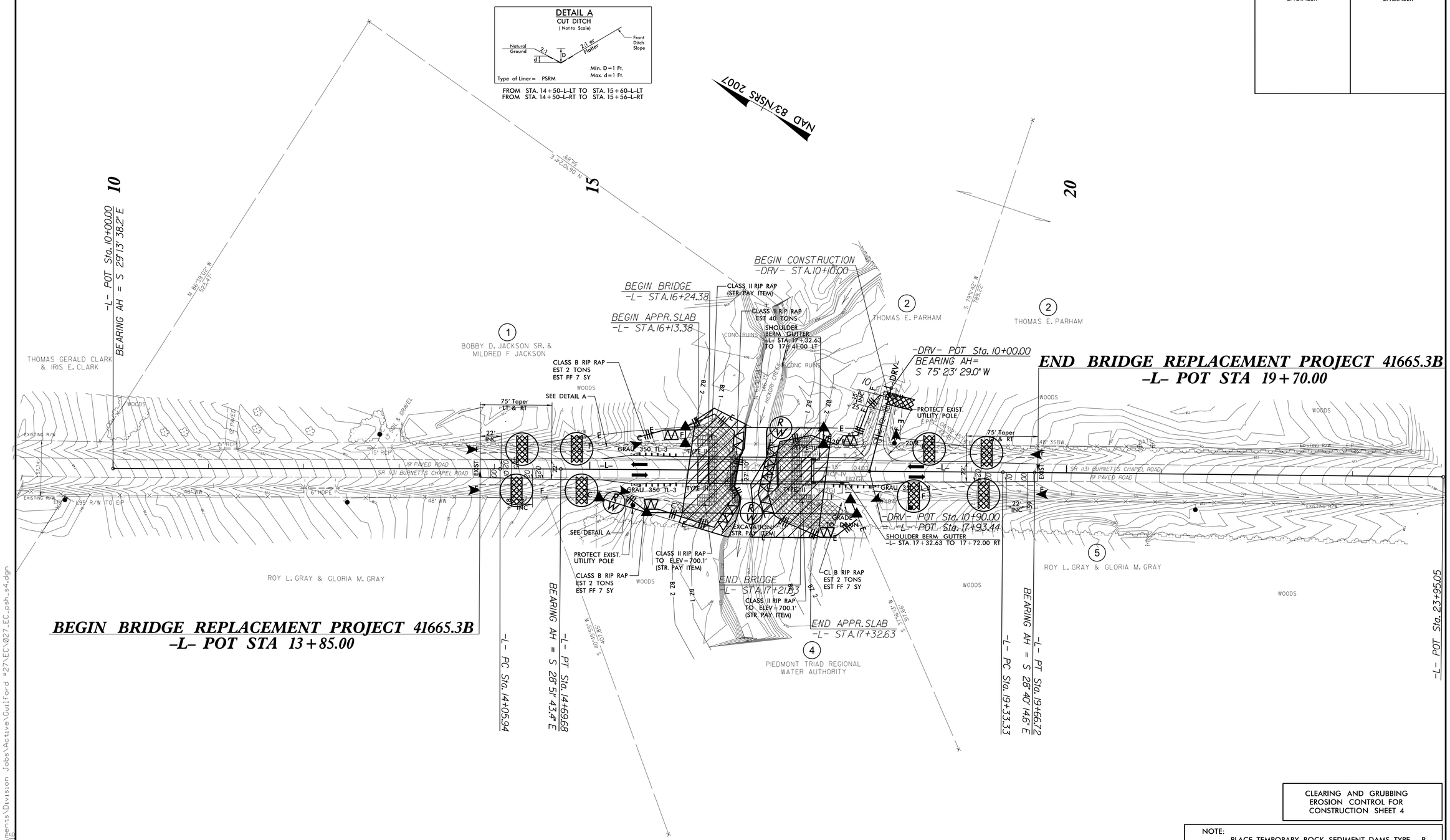

CLEARING AND GRUBBING
EROSION CONTROL FOR
CONSTRUCTION SHEET 4

NOTE:
PLACE TEMPORARY ROCK SEDIMENT DAMS TYPE – B AND TEMPORARY ROCK SILT CHECKS TYPE – A AT DRAINAGE OUTLETS.

ENVIRONMENTALLY SENSITIVE AREA
SEE PROJECT SPECIAL PROVISIONS

8/17/99

06-JUN-2014 08:44
C:\Users\wjcmand\Documents\Division Jobs\Active\Guilford #27\EC\027_EC_psh_s4.dgn
wjcmand

PROJECT REFERENCE NO.	SHEET NO.
41665.3B	EC-5/CONST.4
R/W SHEET NO.	
ROADWAY DESIGN ENGINEER	HYDRAULICS ENGINEER

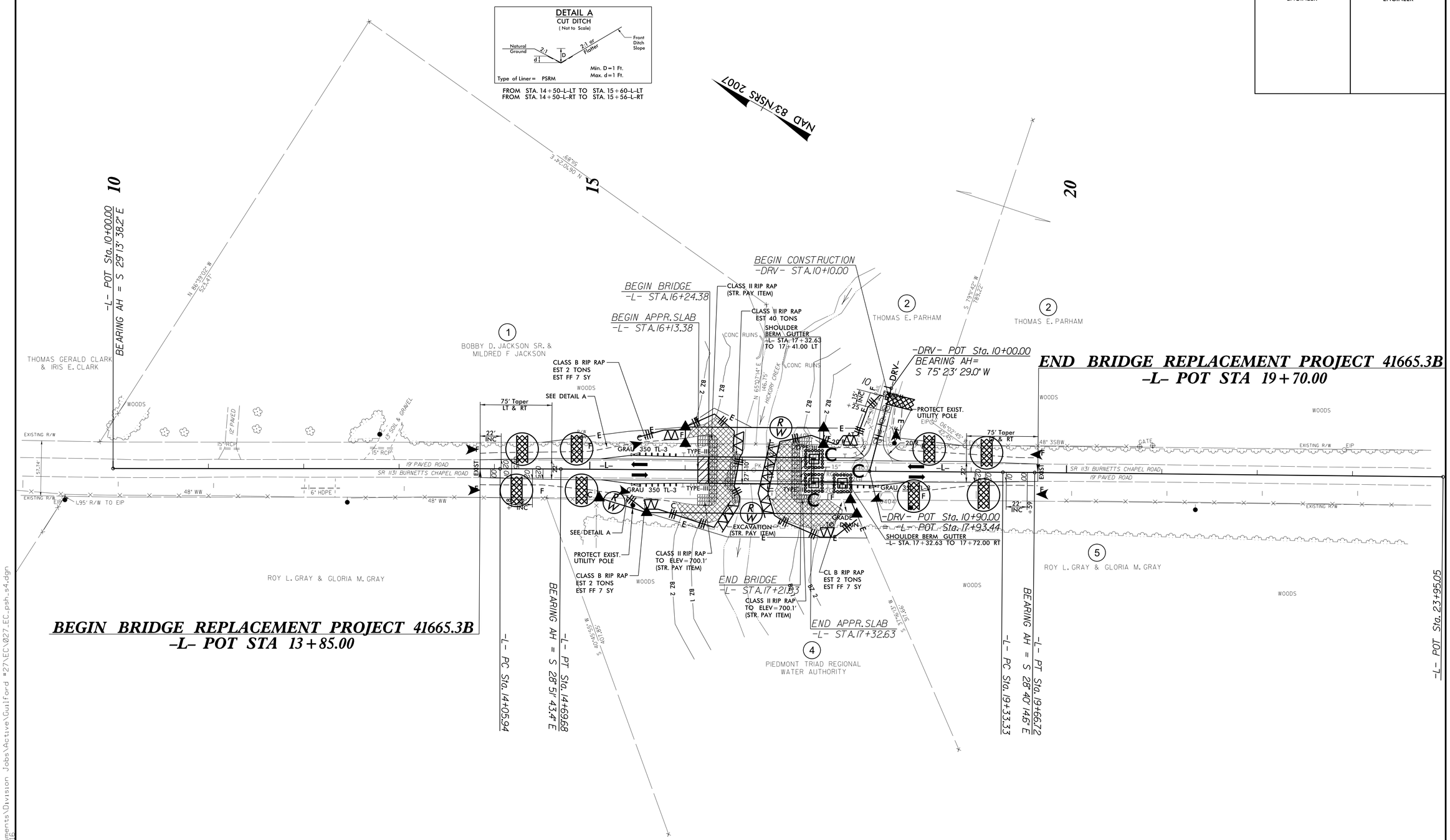

8/17/99

06-JUN-2014 08:49
C:\Users\wjcmand\Documents\Division Jobs\Active\Guilford #27\EC\027_EC_psh_s4.dgn
wjcmand

PROJECT REFERENCE NO.	SHEET NO.
41665.3B	RF-1
R/W SHEET NO.	
ROADWAY DESIGN ENGINEER	HYDRAULICS ENGINEER

PLANTING DETAILS

SEEDLING / LINER BAREROOT PLANTING DETAIL

HEALING IN

1. Locate a healing-in site in a shady, well protected area.
2. Excavate a flat bottom trench 12 inches deep and provide drainage.

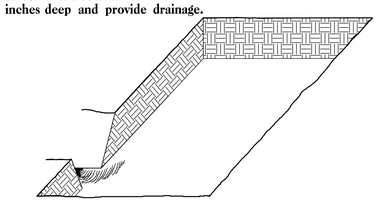

3. Backfill the trench with 2 inches well rotted sawdust. Place a 2 inch layer of well rotted sawdust at a sloping angle at one end of the trench.

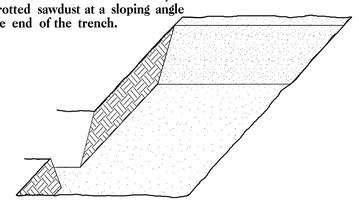

4. Place a single layer of plants against the sloping end so that the root collar is at ground level.

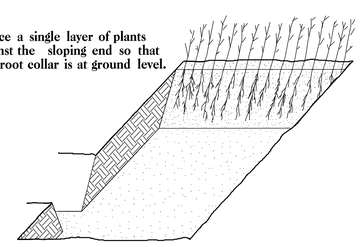

5. Place a 2 inch layer of well rotted sawdust over the roots maintaining a sloping angle.

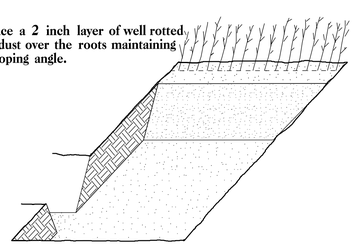

6. Repeat layers of plants and sawdust as necessary and water thoroughly.

DIBBLE PLANTING METHOD
USING THE KBC PLANTING BAR

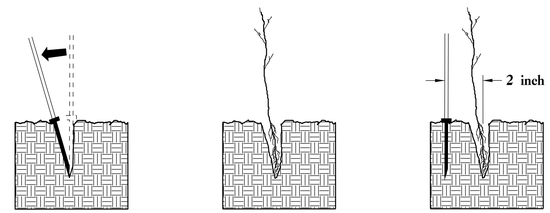

1. Insert planting bar as shown and pull handle toward planter.
2. Remove planting bar and place seedling at correct depth.
3. Insert planting bar 2 inches toward planter from seedling.

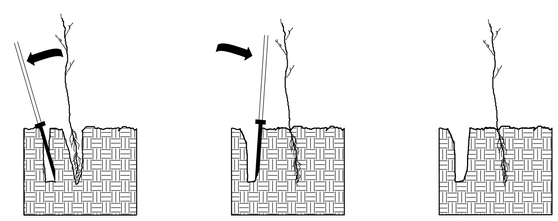

4. Pull handle of bar toward planter, firming soil at bottom.
5. Push handle forward firming soil at top.
6. Leave compaction hole open. Water thoroughly.

PLANTING NOTES:

PLANTING BAG
During planting, seedlings shall be kept in a moist canvas bag or similar container to prevent the root systems from drying.

KBC PLANTING BAR
Planting bar shall have a blade with a triangular cross section, and shall be 12 inches long, 4 inches wide and 1 inch thick at center.

ROOT PRUNING
All seedlings shall be root pruned, if necessary, so that no roots extend more than 10 inches below the root collar.

REFORESTATION

☐ TREE REFORESTATION SHALL BE PLANTED 6 FT. TO 10 FT. ON CENTER, RANDOM SPACING, AVERAGING 8 FT. ON CENTER, APPROXIMATELY 680 PLANTS PER ACRE.

REFORESTATION

MIXTURE, TYPE, SIZE, AND FURNISH SHALL CONFORM TO THE FOLLOWING:

30% PLATANUS OCCIDENTALIS	AMERICAN SYCAMORE	12 in - 18 in BR
30% LIRIODENDRON TULIPIFERA	YELLOW POPLAR	12 in - 18 in BR
40% FRAXINUS PENNSYLVANICA	GREEN ASH	12 in - 18 in BR

REFORESTATION DETAIL SHEET

N.C.D.O.T. - ROADSIDE ENVIRONMENTAL UNIT

COMPUTED BY: T. CAREY DATE: 07/17/13
CHECKED BY: B. SMITH DATE: 07/19/13

PROJ. REFERENCE NO.	SHEET NO.
41665.3B	X-1A

STATE OF NORTH CAROLINA
DIVISION OF HIGHWAYS

CROSS-SECTION SUMMARY

Approximate quantities only. Unclassified excavation, fine grading, clearing and grubbing, breaking of existing pavement, and removal of existing pavement will be paid for at the contract lump sum price for "Grading".

Station L	Uncl. Exc. (cu. yd.)	Embt (cu. yd.)
13+85.00	0	0
14+00.00	1	1
14+50.00	3	8
15+00.00	1	32
15+50.00	0	144
16+00.00	0	290
16+25.00	0	172

Station L	Uncl. Exc. (cu. yd.)	Embt (cu. yd.)
17+20.00	0	0
17+50.00	0	127
18+00.00	0	142
18+50.00	0	231
19+00.00	3	13
19+50.00	5	4
19+70.00	1	1

Station Drv	Uncl. Exc. (cu. yd.)	Embt (cu. yd.)
10+10.00	0	0
10+20.00	2	1
10+30.00	1	2
10+40.00	0	4
10+50.00	0	6
10+60.00	0	9
10+70.00	0	9
10+78.65	0	7

5/9/06
05-MAY-2014 10:35
R:\Roadway\Proj\41665_01_NCDOT_Guilford_Bridge_27\Roadway\XSC\Earthwork\027_Rdy_XSC_X-1A.dgn
$$$$USERNAME$$$$

PROJ. REFERENCE NO.	SHEET NO.
41665.3B	X-1

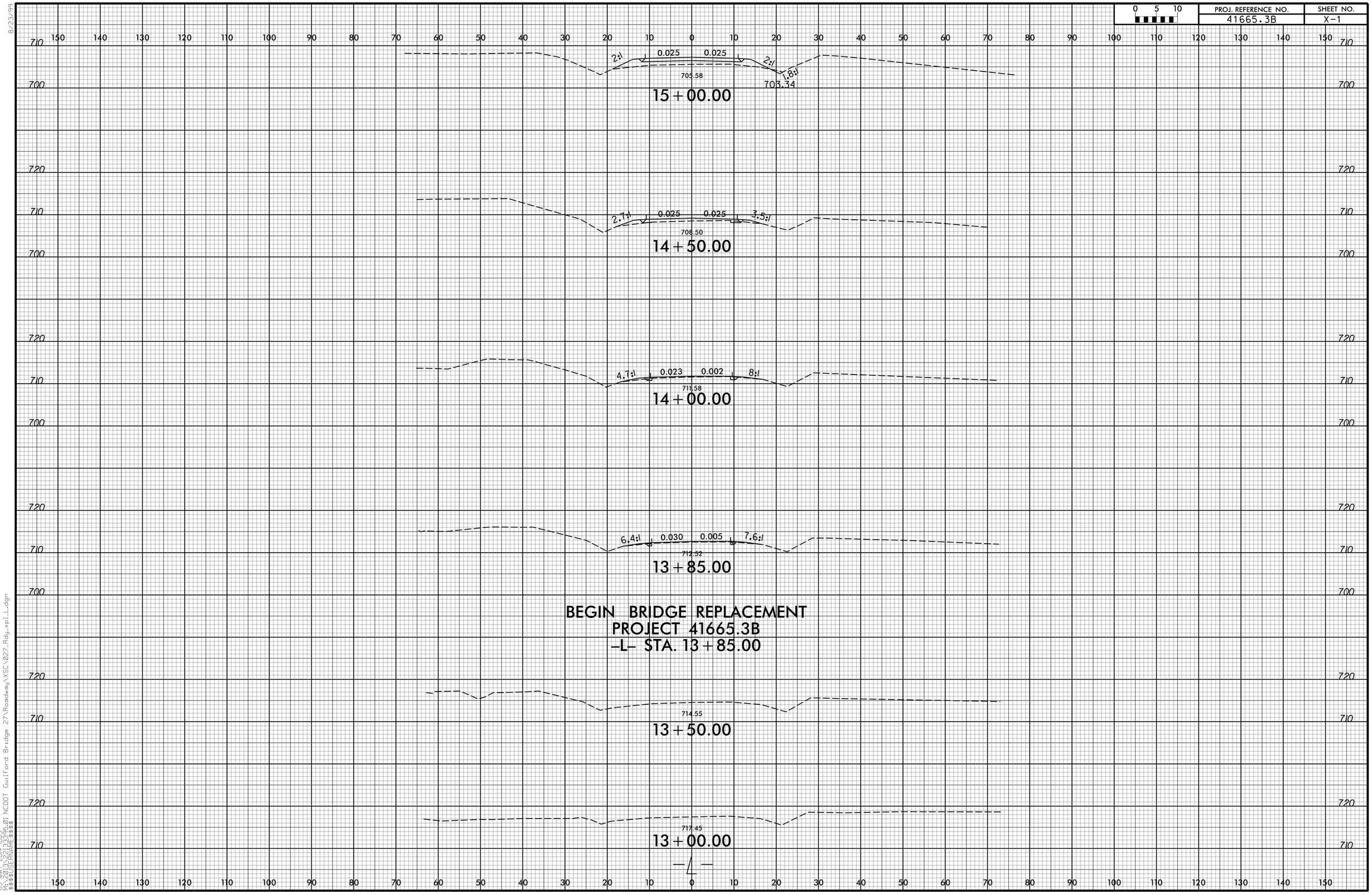

8/23/99
05-MAY-2014 10:13
M:\MAS\2013\33395.01 NCDOT Guilford Bridge 27\Roadway\XSC\027_Rdy_xpl_L.dgn
$$$$USERNAME$$$$

PROJ. REFERENCE NO.	SHEET NO.
41665.3B	X-2

0 5 10

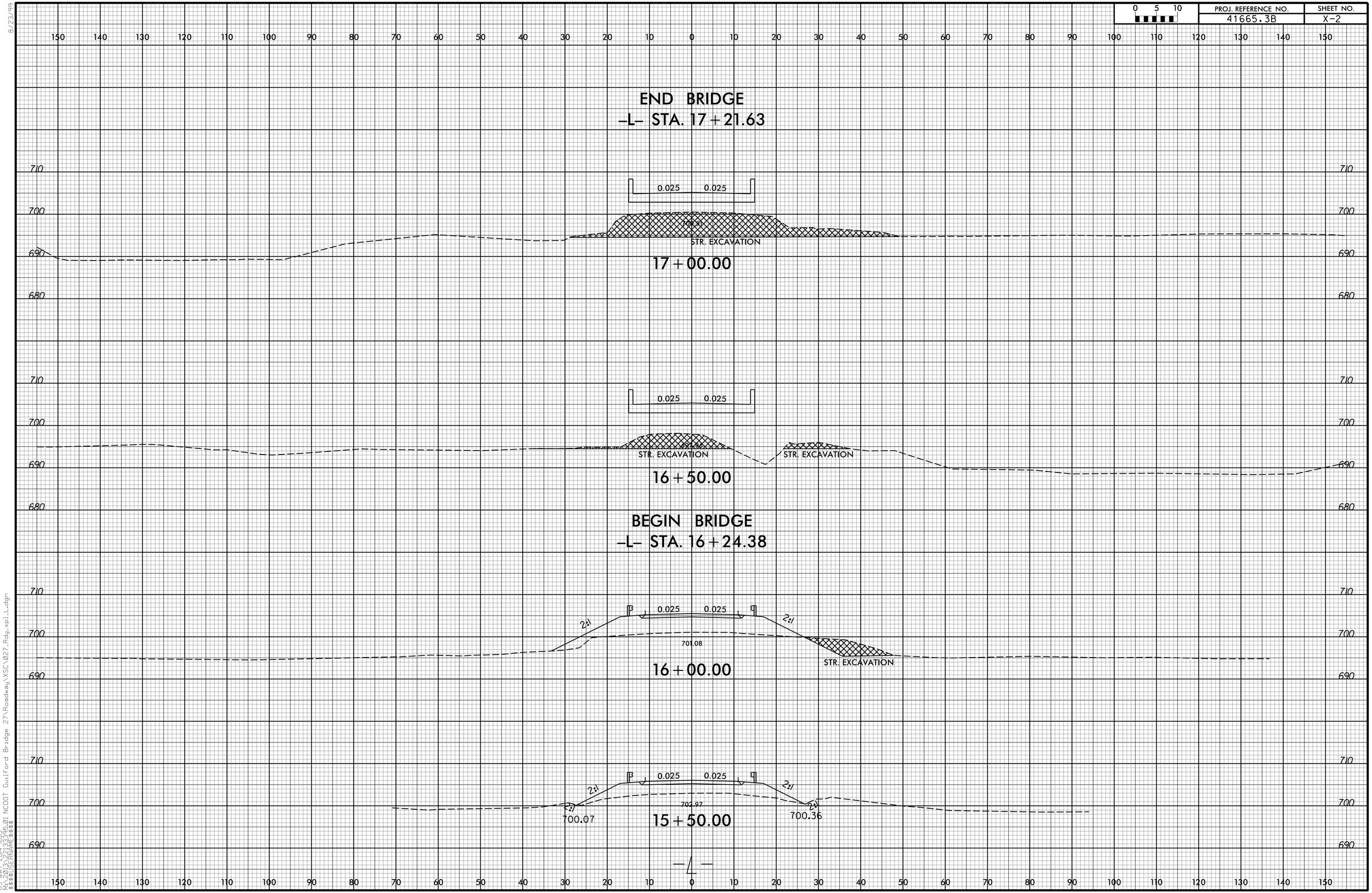

8/23/99

05-MAY-2014 10:13
M:\2013\2013395.01 NCDOT Guilford Bridge 27\Roadway\XSC\027_Rdy_xpl_L.dgn
$$$$USERNAME$$$$

PROJ. REFERENCE NO.	SHEET NO.
41665.3B	X-3

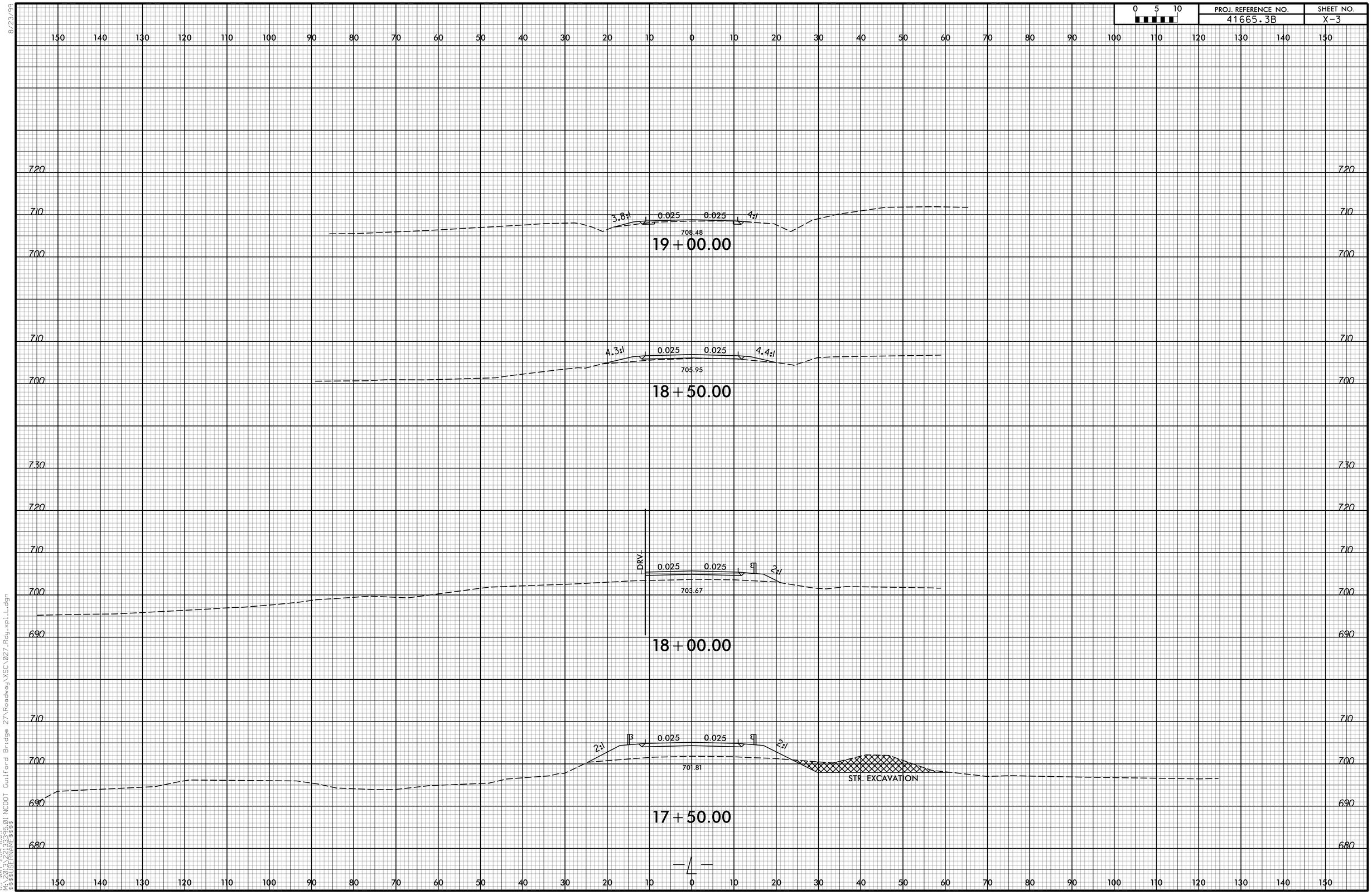

8/23/99

05-MAY-2014 10:13
M:\DGN\32021\33395.01 NCDOT Guilford Bridge 27\Roadway\XSC\027_Rdy_xpl_L.dgn
$$$$USERNAME$$$$

PROJ. REFERENCE NO.	SHEET NO.
41665.3B	X-4

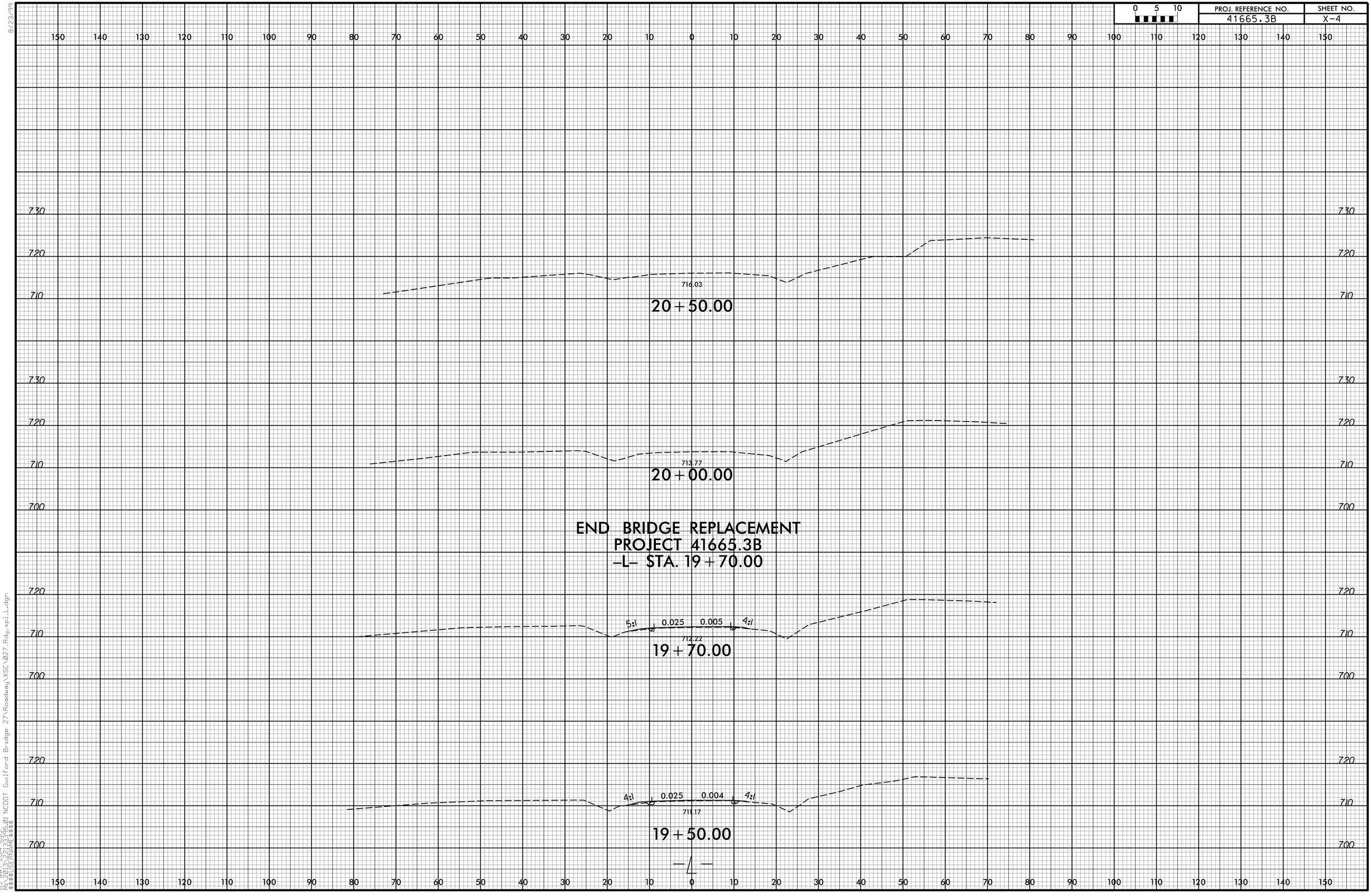

8/23/99

05-MAY-2014 10:13
M:\2013\2013395.01 NCDOT Guilford Bridge 27\Roadway\XSC\027_Rdy_xpl_LL.dgn
$$$$USERNAME$$$$

PROJ. REFERENCE NO.	SHEET NO.
41665.3B	X-5

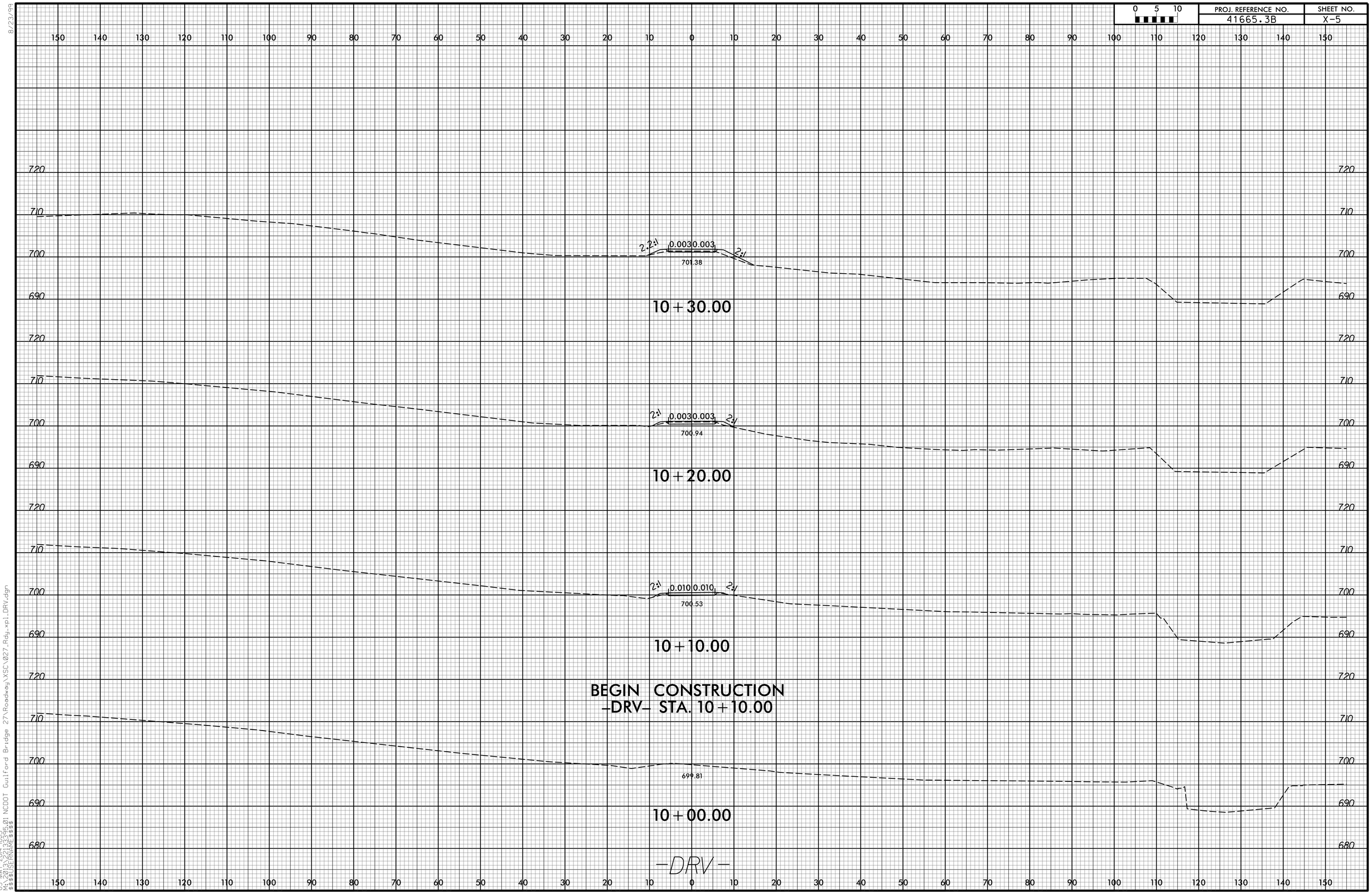

8/23/99
05-MAY-2014 10:13
M:\2012\2133365.01 NCDOT Guilford Bridge 27\Roadway\XSC\027_Rdy_xpl_DRV.dgn
$$$$USERNAME$$$$

PROJ. REFERENCE NO.	SHEET NO.
41665.3B	X-6

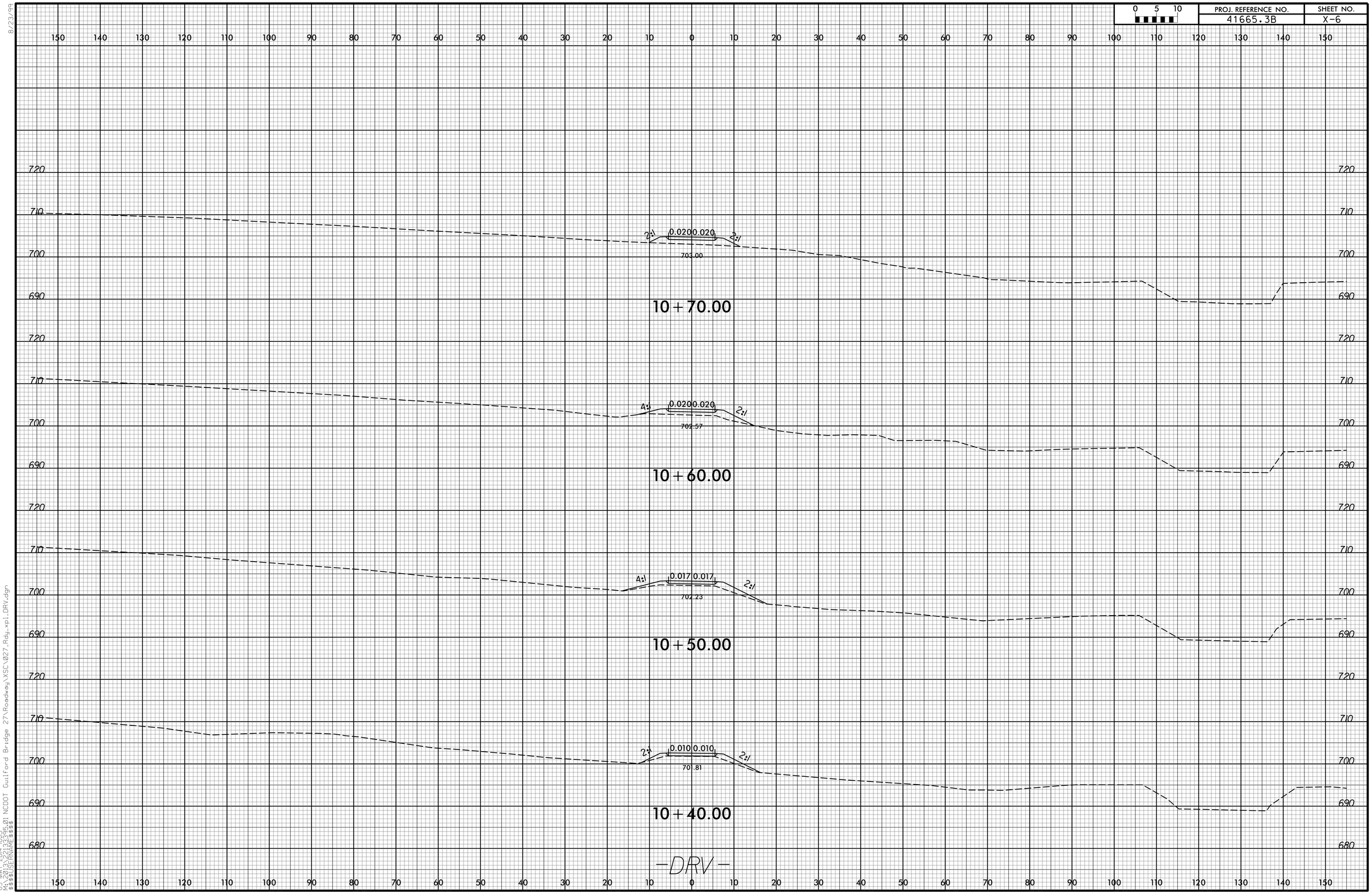

8/23/99

05-MAY-2014 10:13
M:\2012\2133365.01 NCDOT Guilford Bridge 27\Roadway\XSC\027_Rdy_xpl_DRV.dgn
$$$$USERNAME$$$$

PROJ. REFERENCE NO.	SHEET NO.
41665.3B	X-7

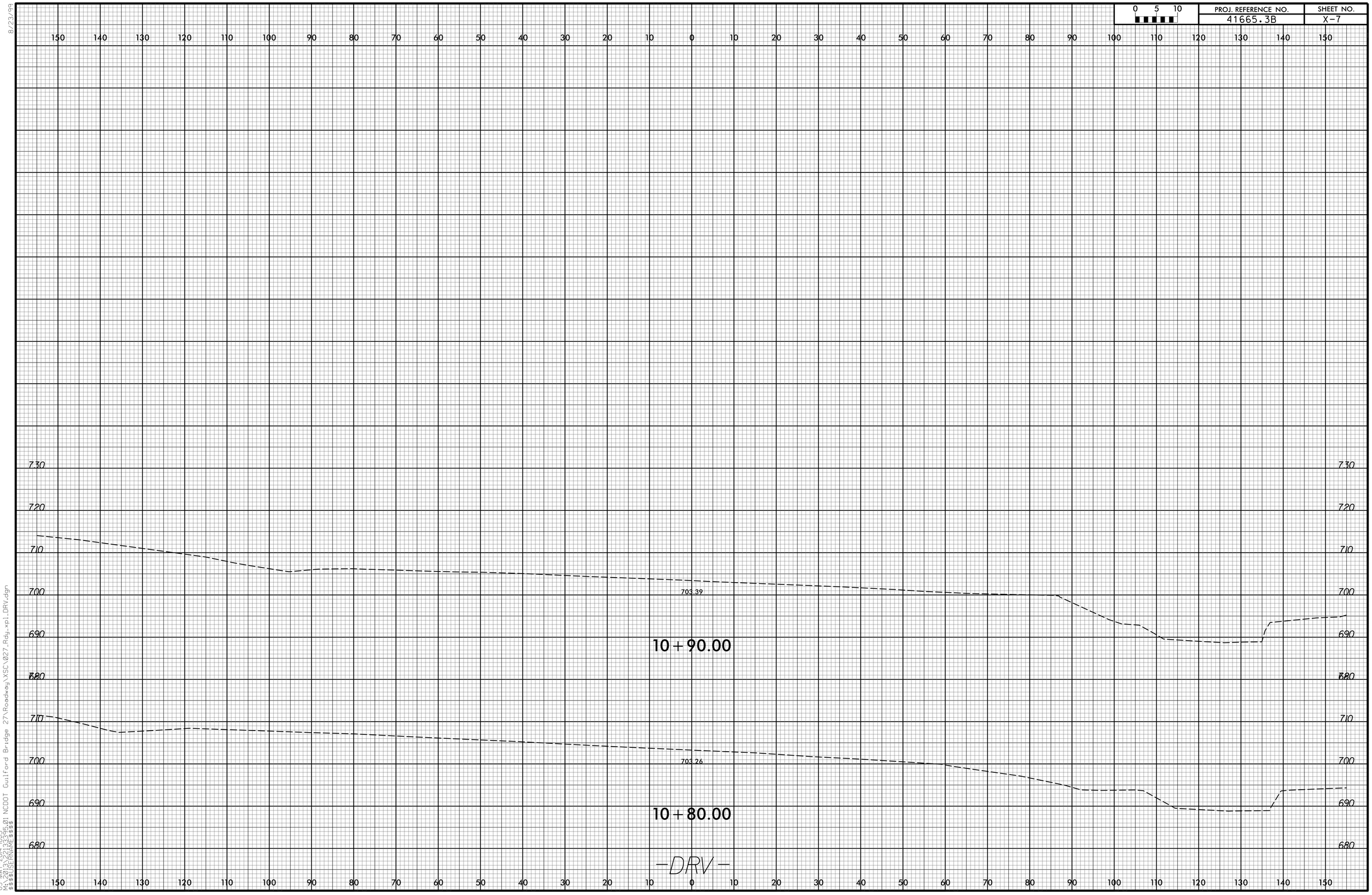

8/23/99
05-MAY-2014 10:13
M:\2014\3221335.01 NCDOT Guilford Bridge 27\Roadway\XSC\027_Rdy_xpl_DRV.dgn
$$$$USERNAME$$$$

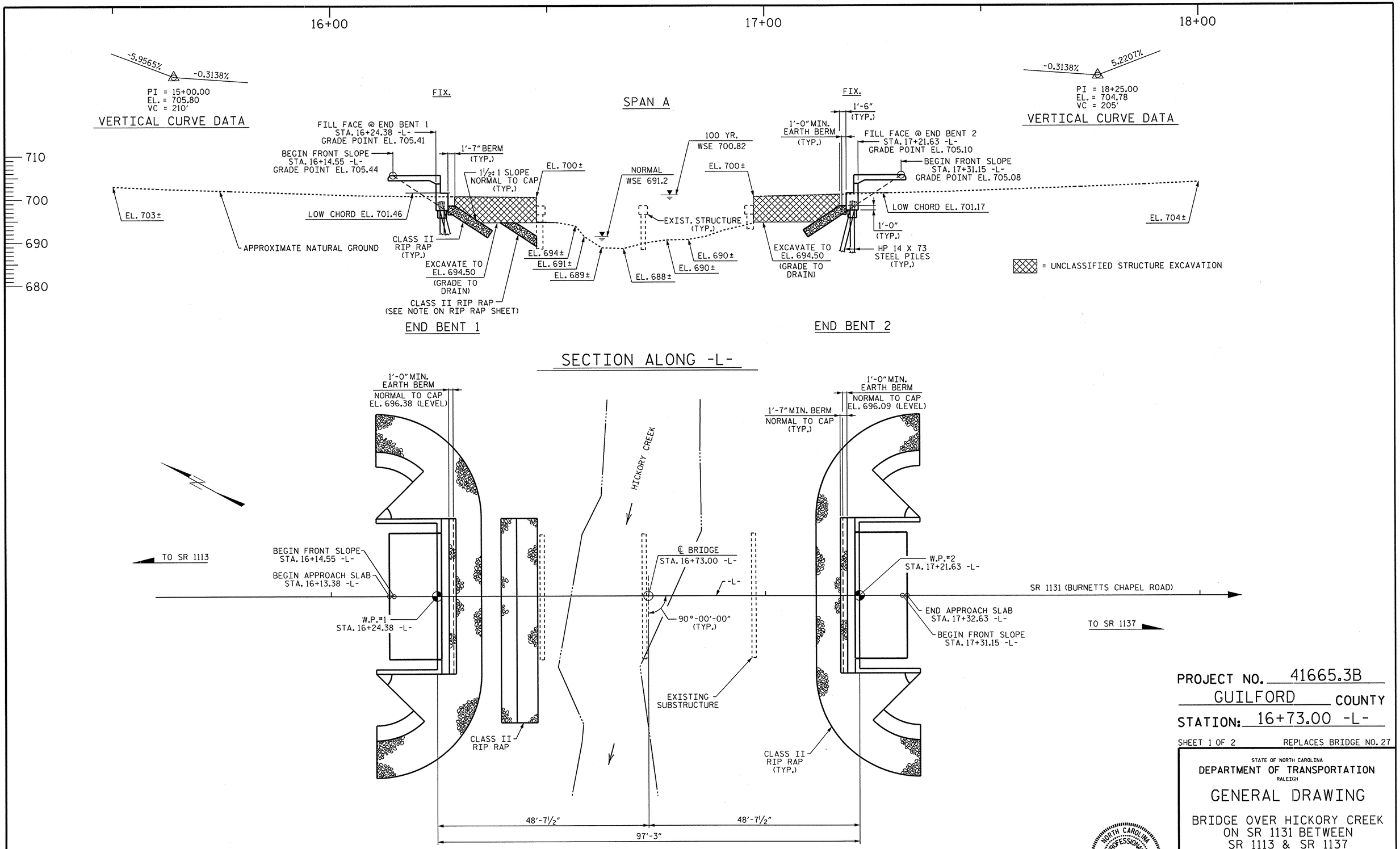

PROJECT NO. 41665.3B

GUILFORD COUNTY

STATION: 16+73.00 -L-

SHEET 1 OF 2 REPLACES BRIDGE NO. 27

STATE OF NORTH CAROLINA
DEPARTMENT OF TRANSPORTATION
RALEIGH

GENERAL DRAWING

BRIDGE OVER HICKORY CREEK
ON SR 1131 BETWEEN
SR 1113 & SR 1137

REVISIONS						SHEET NO.
NO.	BY:	DATE:	NO.	BY:	DATE:	
1			3			TOTAL SHEETS
2			4			

DRAWN BY : William F. Parker DATE : 02/26/14
CHECKED BY : A.K. PATEL DATE : 3/2014
DESIGN ENGINEER OF RECORD: - DATE : -

23-APR-2014 14:44
S:\DPG2\Doug\DivisionProjects\Guilford#27\bridge27_gen_draw.dgn
asorsenglnn

BM 1: RR SPIKE IN BASE OF 15" WHITE OAK TREE, 114' LT. STA. 15+48.35 -L-, EL. = 701.33

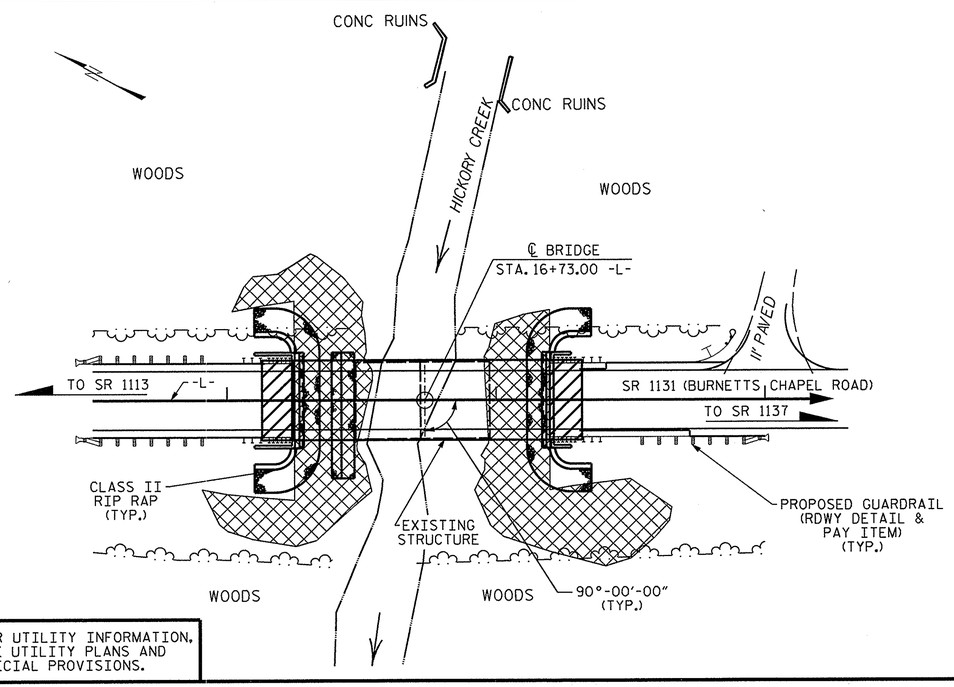

FOR UTILITY INFORMATION, SEE UTILITY PLANS AND SPECIAL PROVISIONS.

LOCATION SKETCH

HYDRAULIC DATA	
DESIGN DISCHARGE	2700 CFS.
FREQUENCY OF DESIGN FLOOD	25 YRS.
DESIGN HIGH WATER ELEVATION	698.9
DRAINAGE AREA	8.1 SQ. MI.
BASE DISCHARGE (Q100)	4100 CFS.
BASE HIGH WATER ELEVATION	700.82

OVERTOPPING FLOOD DATA	
OVERTOPPING DISCHARGE	7500+ CFS.
FREQUENCY OF OVERTOPPING FLOOD	500+ YRS.
OVERTOPPING FLOOD ELEVATION	705.2+

NOTES

ASSUMED LIVE LOAD = HL-93 OR ALTERNATE LOADING.

THIS BRIDGE HAS BEEN DESIGNED IN ACCORDANCE WITH THE AASHTO LRFD BRIDGE DESIGN SPECIFICATIONS.

THIS BRIDGE IS LOCATED IN SEISMIC ZONE 1.

FOR OTHER DESIGN DATA AND GENERAL NOTES, SEE SHEET SN.

FOR SUBMITTAL OF WORKING DRAWINGS, SEE SPECIAL PROVISIONS.

FOR FALSEWORK AND FORMWORK, SEE SPECIAL PROVISIONS.

FOR CRANE SAFETY, SEE SPECIAL PROVISIONS.

FOR GROUT FOR STRUCTURES, SEE SPECIAL PROVISIONS.

THE MATERIAL SHOWN IN THE CROSS-HATCHED AREA SHALL BE EXCAVATED FOR A DISTANCE UP TO 65 FT. EACH SIDE OF CENTERLINE ROADWAY AS DIRECTED BY THE ENGINEER. THIS WORK WILL BE PAID FOR AT THE CONTRACT LUMP SUM PRICE FOR UNCLASSIFIED STRUCTURE EXCAVATION. SEE SECTION 412 OF THE STANDARD SPECIFICATIONS.

THE EXISTING STRUCTURE CONSISTING OF 2 SPANS (1 @ 25'-8", 1@ 25'-7") OF PPC CHANNELS WITH 2.5" AWS ON PPC CAPS ON STEEL PILES WITH STEEL PLANK BULKHEADS AND HAVING A CLEAR ROADWAY WIDTH OF 29'-1" AND LOCATED AT THE SITE OF THE PROPOSED STRUCTURE SHALL BE REMOVED. THE EXISTING BRIDGE IS PRESENTLY POSTED FOR LOAD LIMIT. SHOULD THE STRUCTURAL INTEGRITY OF THE BRIDGE DETERIORATE DURING CONSTRUCTION OF THE PROPOSED BRIDGE, THE LOAD LIMIT MAY BE REDUCED AS FOUND NECESSARY DURING THE LIFE OF THE PROJECT.

THE SUBSTRUCTURE OF THE EXISTING BRIDGE INDICATED ON THE PLANS IS FROM THE BEST INFORMATION AVAILABLE. SINCE THIS INFORMATION IS SHOWN FOR THE CONVENIENCE OF THE CONTRACTOR, THE CONTRACTOR SHALL HAVE NO CLAIM WHATSOEVER AGAINST THE DEPARTMENT OF TRANSPORTATION FOR ANY DELAYS OR ADDITIONAL COST INCURRED BASED ON DIFFERENCES BETWEEN THE EXISTING BRIDGE SUBSTRUCTURE SHOWN ON THE PLANS AND THE ACTUAL CONDITIONS AT THE PROJECT SITE.

REMOVAL OF THE EXISTING BRIDGE SHALL BE PERFORMED SO AS NOT TO ALLOW DEBRIS TO FALL INTO THE WATER. THE CONTRACTOR SHALL REMOVE THE BRIDGE AND SUBMIT PLANS FOR DEMOLITION IN ACCORDANCE WITH ARTICLE 402-2 OF THE STANDARD SPECIFICATIONS.

THIS STRUCTURE HAS BEEN DESIGNED IN ACCORDANCE WITH "HEC 18-EVALUATING SCOUR AT BRIDGES."

FOR EROSION CONTROL MEASURES, SEE EROSION CONTROL PLANS.

ASPHALT WEARING SURFACE IS INCLUDED IN ROADWAY QUANTITY ON ROADWAY PLANS.

FOR PILES, SEE SECTION 450 OF THE STANDARD SPECIFICATIONS.

PILES AT END BENT 1 AND END BENT 2 ARE DESIGNED FOR A FACTORED RESISTANCE OF 135 TONS PER PILE.

DRIVE PILES AT END BENT 1 AND END BENT 2 TO A REQUIRED DRIVING RESISTANCE OF 225 TONS PER PILE.

IT HAS BEEN ESTIMATED THAT A HAMMER WITH AN EQUIVALENT RATED ENERGY IN THE RANGE OF 27,000 TO 42,000 FT-LBS PER BLOW WILL BE REQUIRED TO DRIVE PILES AT END BENT 1 AND END BENT 2. THE ESTIMATED ENERGY RANGE DOES NOT RELEASE THE CONTRACTOR FROM PROVIDING EQUIPMENT IN ACCORDANCE WITH SUBARTICLE 450-3(D)(2) OF THE STANDARD SPECIFICATIONS.

TOTAL BILL OF MATERIAL

	REMOVAL OF EXISTING STRUCTURE	UNCLASSIFIED STRUCTURE EXCAVATION	CLASS A CONCRETE	BRIDGE APPROACH SLABS	REINFORCING STEEL	HP 14 X 73 STEEL PILES		VERTICAL CONCRETE BARRIER RAIL	RIP RAP CLASS II (2'-0" THICK)	GEOTEXTILE FOR DRAINAGE	ELASTOMERIC BEARINGS	3'-0" X 3'-3" PRESTRESSED CONCRETE BOX BEAMS	
	LUMP SUM	LUMP SUM	CU. YDS.	LUMP SUM	LBS.	NO.	LIN. FT.	LIN. FT.	TON	SQ. YD.	LUMP SUM	NO.	LIN. FT.
SUPERSTRUCTURE				LUMP SUM				190.0			LUMP SUM	10	950.0
END BENT 1		LUMP SUM	28.1		4390	5	125		143	158			
END BENT 2		LUMP SUM	28.1		4390	5	75		97	108			
TOTAL	LUMP SUM	LUMP SUM	56.2	LUMP SUM	8780	10	200	190.0	240	266	LUMP SUM	10	950.0

PROJECT NO. 41665.3B

GUILFORD COUNTY

STATION: 16+73.00 -L-

SHEET 2 OF 2

STATE OF NORTH CAROLINA
DEPARTMENT OF TRANSPORTATION
RALEIGH

GENERAL DRAWING

BRIDGE OVER HICKORY CREEK
ON SR 1131 BETWEEN
SR 1113 & SR 1137

NORTH CAROLINA PROFESSIONAL SEAL 14855 ENGINEER DOUGLAS R. CALDER
4/23/14

REVISIONS						SHEET NO.
NO.	BY:	DATE:	NO.	BY:	DATE:	TOTAL SHEETS
1			3			
2			4			

DRAWN BY : William T. Parker DATE : 02/26/14
CHECKED BY : A.K. PATEL DATE : 3/2014
DESIGN ENGINEER OF RECORD: - DATE : -

23-APR-2014 12:41
S:\DPG2\Doug\DivisionProjects\Guilford#27\bridge27_gen_draw.dgn
asorsenginh

LOAD AND RESISTANCE FACTOR RATING (LRFD) SUMMARY FOR PRESTRESSED CONCRETE GIRDERS

LEVEL		VEHICLE	WEIGHT (W) (TONS)	CONTROLLING LOAD RATING	MINIMUM RATING FACTORS (RF)	TONS = W X RF	STRENGTH I LIMIT STATE											SERVICE III LIMIT STATE						COMMENT NUMBER
								MOMENT					SHEAR						MOMENT					
							LIVELOAD FACTORS	DISTRIBUTION FACTORS (DF)	RATING FACTOR	SPAN	GIRDER LOCATION	DISTANCE FROM LEFT END OF SPAN (ft)	DISTRIBUTION FACTORS (DF)	RATING FACTOR	SPAN	GIRDER LOCATION	DISTANCE FROM LEFT END OF SPAN (ft)	LIVELOAD FACTORS	DISTRIBUTION FACTORS (DF)	RATING FACTOR	SPAN	GIRDER LOCATION	DISTANCE FROM LEFT END OF SPAN (ft)	
DESIGN LOAD RATING		HL-93(Inv)	N/A	1	1.312	--	1.75	0.272	1.49	A	EL	46.75	0.492	1.42	A	EL	4.675	0.80	0.272	**1.31**	A	EL	**46.75**	
		HL-93(Opr)	N/A	--	1.845	--	1.35	0.272	1.94	A	EL	46.75	0.492	1.85	A	EL	4.675	N/A	--	--	--	--	--	
		HS-20(Inv)	36.000	2	1.804	64.941	1.75	0.272	2.05	A	EL	46.75	0.492	1.9	A	EL	4.675	0.80	0.272	**1.80**	A	EL	**46.75**	
		HS-20(Opr)	36.000	--	2.466	88.777	1.35	0.272	2.66	A	EL	46.75	0.492	2.47	A	EL	4.675	N/A	--	--	--	--	--	
LEGAL LOAD RATING	SV	SNSH	13.500	--	4.246	57.316	1.4	0.272	6.04	A	EL	46.75	0.492	5.85	A	EL	4.675	0.80	0.272	4.25	A	EL	46.75	
		SNGARBS2	20.000	--	3.088	61.767	1.4	0.272	4.4	A	EL	46.75	0.492	4.1	A	EL	4.675	0.80	0.272	3.09	A	EL	46.75	
		SNAGRIS2	22.000	--	2.894	63.671	1.4	0.272	4.12	A	EL	46.75	0.492	3.78	A	EL	4.675	0.80	0.272	2.89	A	EL	46.75	
		SNCOTTS3	27.250	--	2.111	57.512	1.4	0.272	3	A	EL	46.75	0.492	2.91	A	EL	4.675	0.80	0.272	2.11	A	EL	46.75	
		SNAGGRS4	34.925	--	1.735	60.582	1.4	0.272	2.47	A	EL	46.75	0.492	2.38	A	EL	4.675	0.80	0.272	1.73	A	EL	46.75	
		SNS5A	35.550	--	1.698	60.373	1.4	0.272	2.42	A	EL	46.75	0.492	2.38	A	EL	4.675	0.80	0.272	1.70	A	EL	46.75	
		SNS6A	39.950	--	1.546	61.772	1.4	0.272	2.2	A	EL	46.75	0.492	2.16	A	EL	4.675	0.80	0.272	1.55	A	EL	46.75	
		SNS7B	42.000	--	1.472	61.826	1.4	0.272	2.1	A	EL	46.75	0.492	2.1	A	EL	4.675	0.80	0.272	1.47	A	EL	46.75	
	TTST	TNAGRIT3	33.000	--	1.882	62.108	1.4	0.272	2.68	A	EL	46.75	0.492	2.58	A	EL	4.675	0.80	0.272	1.88	A	EL	46.75	
		TNT4A	33.075	--	1.887	62.417	1.4	0.272	2.69	A	EL	46.75	0.492	2.53	A	EL	4.675	0.80	0.272	1.89	A	EL	46.75	
		TNT6A	41.600	--	1.532	63.725	1.4	0.272	2.18	A	EL	46.75	0.492	2.2	A	EL	4.675	0.80	0.272	1.53	A	EL	46.75	
		TNT7A	42.000	--	1.534	64.411	1.4	0.272	2.18	A	EL	46.75	0.492	2.16	A	EL	4.675	0.80	0.272	1.53	A	EL	46.75	
		TNT7B	42.000	--	1.572	66.032	1.4	0.272	2.24	A	EL	46.75	0.492	2.07	A	EL	4.675	0.80	0.272	1.57	A	EL	46.75	
		TNAGRIT4	43.000	--	1.506	64.77	1.4	0.272	2.14	A	EL	46.75	0.492	2.01	A	EL	4.675	0.80	0.272	1.51	A	EL	46.75	
		TNAGT5A	45.000	--	1.425	64.137	1.4	0.272	2.03	A	EL	46.75	0.492	1.97	A	EL	4.675	0.80	0.272	1.43	A	EL	46.75	
		TNAGT5B	45.000	3	1.413	63.564	1.4	0.272	2.01	A	EL	46.75	0.492	1.91	A	EL	4.675	0.80	0.272	**1.41**	A	EL	**46.75**	

LOAD FACTORS:

DESIGN LOAD RATING FACTORS	LIMIT STATE	γ_{DC}	γ_{DW}
	STRENGTH I	1.25	1.50
	SERVICE III	1.00	1.00

NOTES:

MINIMUM RATING FACTORS ARE BASED ON THE STRENGTH I AND SERVICE III LIMIT STATES.

ALLOWABLE STRESSES FOR SERVICE III LIMIT STATE ARE AS REQUIRED FOR DESIGN.

COMMENTS:

1.
2.
3.
4.

(#) CONTROLLING LOAD RATING
(1) DESIGN LOAD RATING (HL-93)
(2) DESIGN LOAD RATING (HS-20)
(3) LEGAL LOAD RATING **
** SEE CHART FOR VEHICLE TYPE

GIRDER LOCATION
I - INTERIOR GIRDER
EL - EXTERIOR LEFT GIRDER
ER - EXTERIOR RIGHT GIRDER

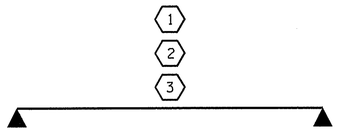

LRFR SUMMARY

PROJECT NO. 41665.3B

GUILFORD COUNTY

STATION: 16+73.00 -L-

STATE OF NORTH CAROLINA
DEPARTMENT OF TRANSPORTATION
RALEIGH

STANDARD

LRFR SUMMARY FOR 95' BOX BEAM UNIT 90° SKEW (NON-INTERSTATE TRAFFIC)

NORTH CAROLINA PROFESSIONAL SEAL 14855 ENGINEER DOUGLAS R. CALHOUN
4/23/14

REVISIONS						SHEET NO.
NO.	BY:	DATE:	NO.	BY:	DATE:	
1			3			TOTAL SHEETS
2			4			

ASSEMBLED BY : William T. Parker DATE : 02/10/14
CHECKED BY : A.K. PATEL DATE : 3/2014
DRAWN BY : TMG 11/11
CHECKED BY : AAC 11/11

23-APR-2014 12:40
S:\DPG2\Doug\DivisionProjects\Guilford#27\bridge27_superstructure.dgn
asorsenginh

STD. NO. 39LRFR1_90S_95L

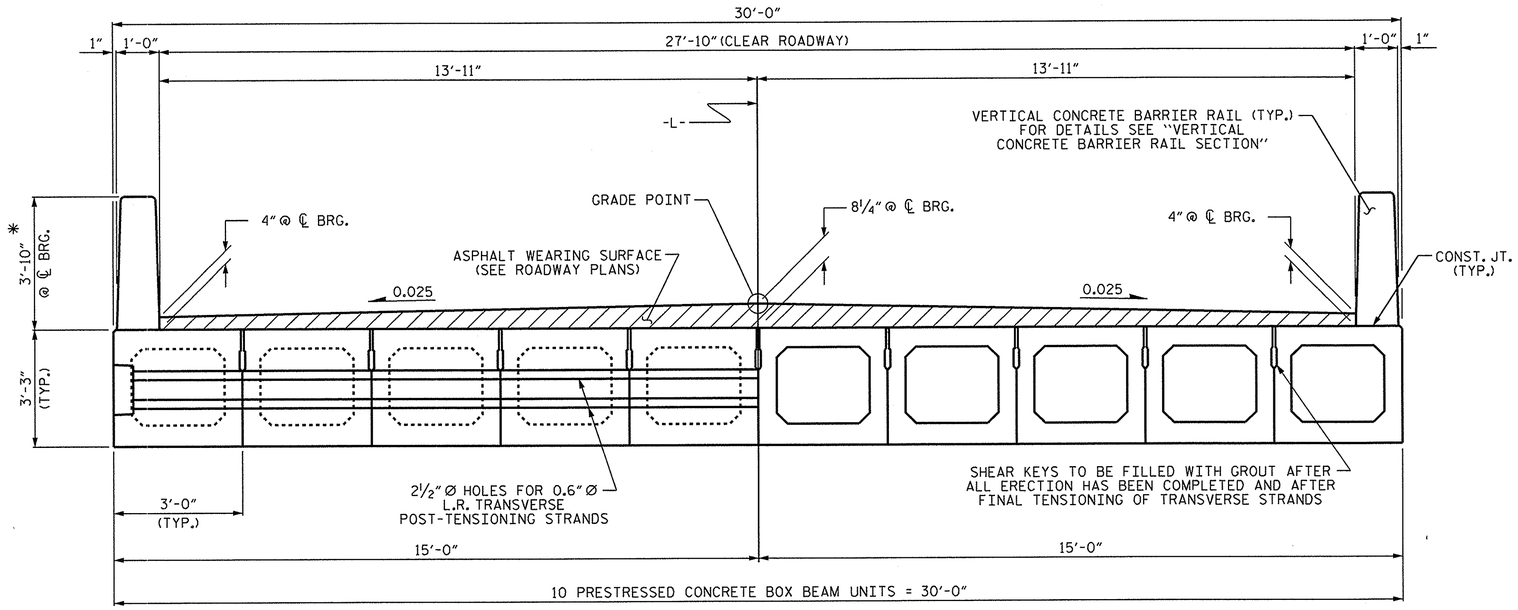

HALF SECTION
AT INTERMEDIATE DIAPHRAGMS

HALF SECTION
THROUGH VOIDS

TYPICAL SECTION

*THE MAXIMUM BARRIER RAIL HEIGHT AND ASPHALT THICKNESS IS SHOWN. THE HEIGHT OF THE BARRIER RAIL AND ASPHALT THICKNESS VARIES WHILE THE TOP OF THE BARRIER RAIL FOLLOWS THE PROFILE OF THE GUTTERLINE. FOR RAIL HEIGHT DETAILS AND ASPHALT THICKNESS, SEE THE "VERTICAL CONCRETE BARRIER RAIL SECTION" DETAIL.

FIXED END

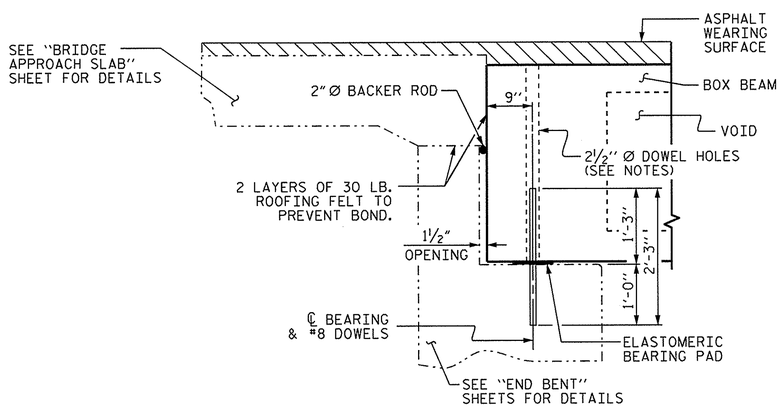

SECTION AT END BENT

NOTES

ALL PRESTRESSING STRANDS SHALL BE 7-WIRE LOW RELAXATION GRADE 270 STRANDS AND SHALL CONFORM TO AASHTO M203 EXCEPT FOR SAMPLING REQUIREMENTS WHICH SHALL BE IN ACCORDANCE WITH THE STANDARD SPECIFICATIONS.

ALL REINFORCING STEEL CAST WITH THE BOX BEAM SECTIONS SHALL BE GRADE 60 AND SHALL BE INCLUDED IN THE UNIT PRICE BID FOR PRESTRESSED CONCRETE BOX BEAMS.

RECESSES FOR TRANSVERSE STRANDS SHALL BE GROUTED AFTER THE TENSIONING OF THE STRANDS.

THE 2½" Ø DOWEL HOLES AT FIXED ENDS OF BOX BEAM SECTIONS SHALL BE FILLED WITH NON-SHRINK GROUT.

THE BACKERS ROD SHALL CONFORM TO THE REQUIREMENTS OF TYPE M BOND BREAKER. SEE SECTION 1028 OF THE STANDARD SPECIFICATIONS.

THE TRANSFER OF LOAD FROM THE ANCHORAGES TO THE BOX BEAM UNIT SHALL BE DONE WHEN THE CONCRETE HAS REACHED A COMPRESSIVE STRENGTH OF NOT LESS THAN 5500 PSI.

ALL REINFORCING STEEL IN VERTICAL CONCRETE BARRIER RAILS SHALL BE EPOXY COATED.

PRESTRESSING STRANDS SHALL BE CUT FLUSH WITH THE BOX BEAM UNIT ENDS.

APPLY EPOXY PROTECTIVE COATING TO BOX BEAM UNIT ENDS.

VERTICAL GROOVED CONTRACTION JOINTS, ½" IN DEPTH, SHALL BE TOOLED IN ALL EXPOSED FACES OF THE BARRIER RAIL AND IN ACCORDANCE WITH ARTICLE 825-10(B) OF THE STANDARD SPECIFICATIONS. A VERTICAL CONTRACTION JOINT SHALL BE LOCATED AT EACH THIRD POINT BETWEEN BARRIER RAIL EXPANSION JOINTS. ONLY ONE CONTRACTION JOINT IS REQUIRED AT MIDPOINT OF BARRIER RAIL SEGMENTS LESS THAN 20 FEET IN LENGTH AND NO CONTRACTION JOINTS ARE REQUIRED FOR THOSE SEGMENTS LESS THAN 10 FEET IN LENGTH.

THE LOCATION OF THE VOID DRAINS MAY BE SHIFTED SLIGHTLY WHERE NECESSARY TO CLEAR PRESTRESSING STRANDS OR TRANSVERSE REINFORCING STEEL.

FOR GROUT FOR STRUCTURES, SEE SPECIAL PROVISIONS.

PROJECT NO. 41665.3B
GUILFORD COUNTY
STATION: 16+73.00 -L-

SHEET 1 OF 5

STATE OF NORTH CAROLINA
DEPARTMENT OF TRANSPORTATION
RALEIGH

STANDARD

3'-0" X 3'-3"
PRESTRESSED CONCRETE
BOX BEAM UNIT

NORTH CAROLINA PROFESSIONAL SEAL 14855 ENGINEER DOUGLAS R. CALHOUN
4/23/14

REVISIONS						SHEET NO.
NO.	BY:	DATE:	NO.	BY:	DATE:	
1			3			TOTAL SHEETS
2			4			

ASSEMBLED BY : William T. Parker DATE : 02/10/14
CHECKED BY : A.K. PATEL DATE : 3/2014
DRAWN BY : DGE 8/11
CHECKED BY : TMC 11/11

23-APR-2014 12:40
S:\DPG2\Doug\DivisionProjects\Guilford*27\bridge27_superstructure.dgn
asorsenginh

STD. NO. 39PCBB1_30

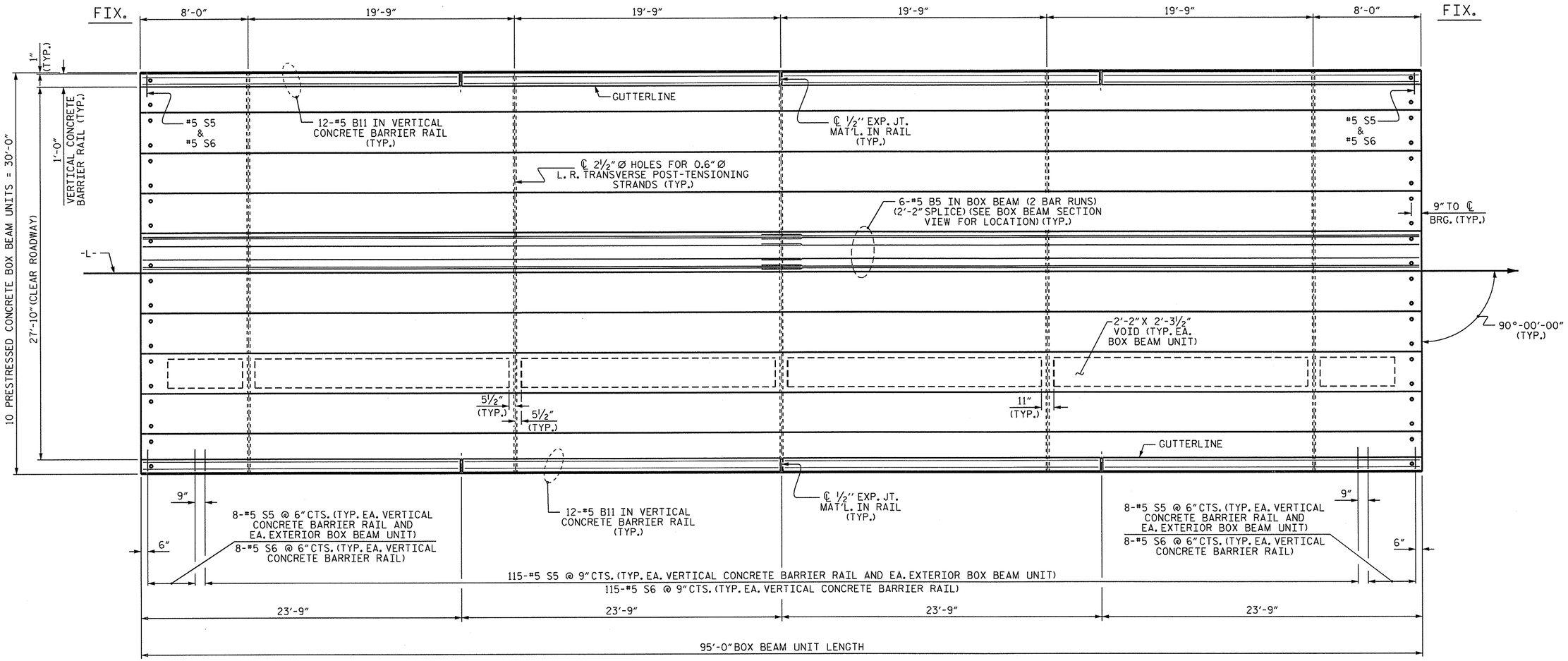

PLAN OF UNIT

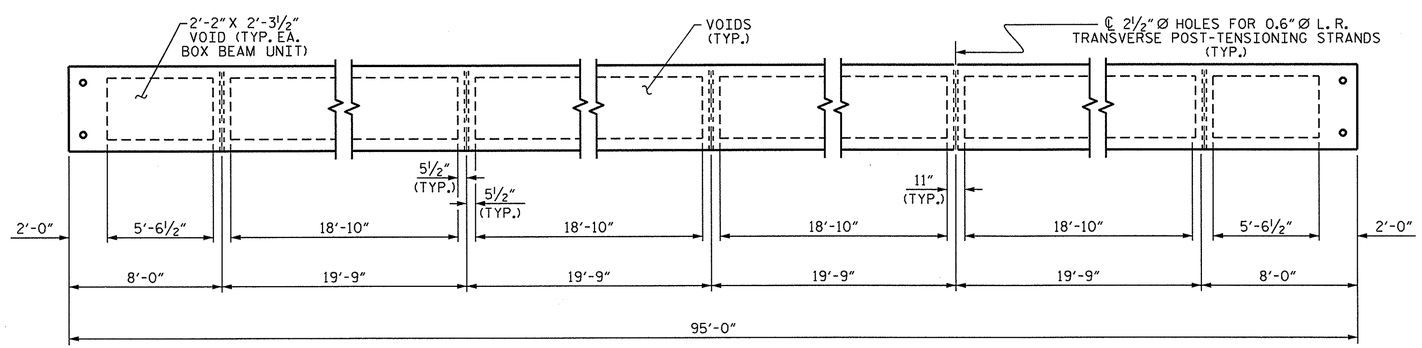

DIAPHRAGM AND VOID LAYOUT

PROJECT NO. 41665.3B

GUILFORD COUNTY

STATION: 16+73.00 -L-

SHEET 2 OF 5

STATE OF NORTH CAROLINA
DEPARTMENT OF TRANSPORTATION
RALEIGH

PLAN OF 95' UNIT
27'-10" CLEAR ROADWAY
90° SKEW

NORTH CAROLINA PROFESSIONAL SEAL 14855 ENGINEER DOUGLAS B. CALHOUN
4/23/14

REVISIONS						SHEET NO.
NO.	BY:	DATE:	NO.	BY:	DATE:	
1			3			TOTAL SHEETS
2			4			

ASSEMBLED BY : William T. Parker DATE : 02/10/14
CHECKED BY : A.K. PATEL DATE : 3/2014
DRAWN BY : DGE 8/10
CHECKED BY : TMG 11/11

23-APR-2014 12:40
S:\DPG2\Doug\DivisionProjects\Guilford#27\bridge27_superstructure.dgn
asorsenginh

STD.NO.39PCBB_30_90S_95L

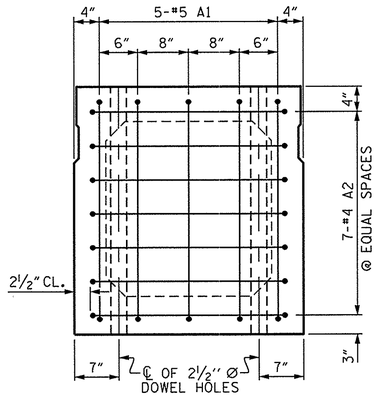

END ELEVATION

SHOWING PLACEMENT OF #5 & #4 "A" BARS AND LOCATION OF DOWEL HOLES.
(INTERIOR BOX BEAM SECTION SHOWN-EXTERIOR SECTION SIMILAR EXCEPT SHEAR KEY LOCATION. STRAND LAYOUT NOT SHOWN.)

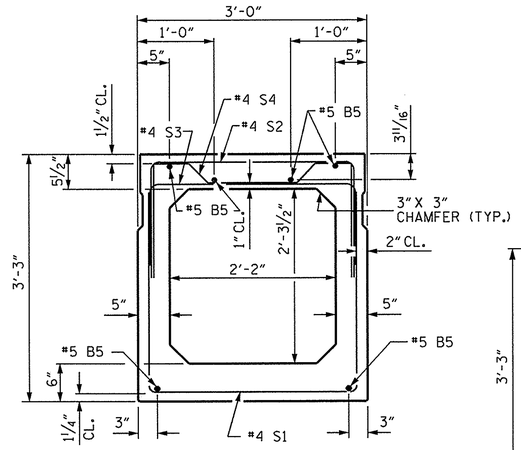

INTERIOR BOX BEAM SECTION

(STRAND LAYOUT NOT SHOWN)

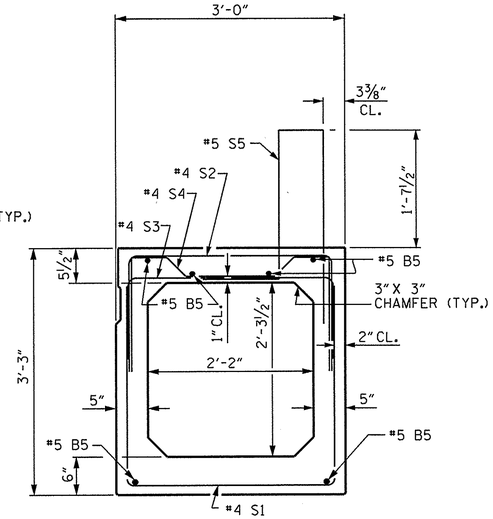

EXTERIOR BOX BEAM SECTION

(STRAND LAYOUT NOT SHOWN)

0.6" Ø LOW RELAXATION STRAND LAYOUT

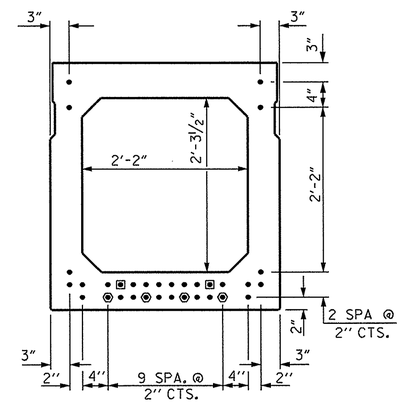

TYPICAL STRAND LOCATION

(32 STRANDS REQUIRED)

DEBONDING LEGEND

- ● FULLY BONDED STRANDS
- ▣ STRANDS DEBONDED FOR 4'-0" FROM END OF GIRDER
- ⬢ STRANDS DEBONDED FOR 12'-0" FROM END OF GIRDER

BOND SHALL BE BROKEN ON STRANDS AS SHOWN FOR THE SPECIFIED LENGTH FROM EACH END OF THE BOX BEAM. SEE STANDARD SPECIFICATIONS ARTICLE 1078-7.

BAR TYPES

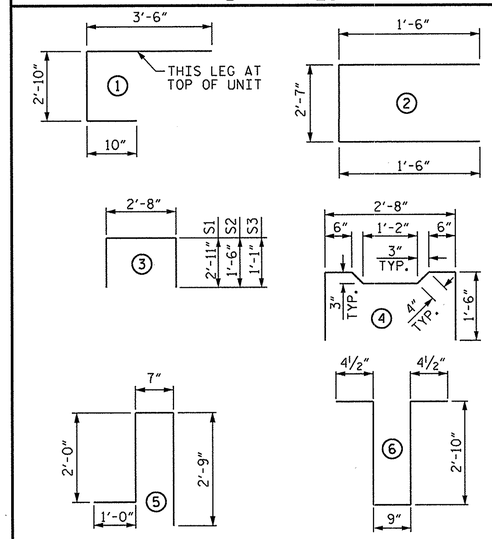

ALL BAR DIMENSIONS ARE OUT TO OUT

BILL OF MATERIAL FOR ONE BOX BEAM SECTION

				EXTERIOR UNIT		INTERIOR UNIT	
BAR	NUMBER	SIZE	TYPE	LENGTH	WEIGHT	LENGTH	WEIGHT
A1	10	#5	1	7'-2"	75	7'-2"	75
A2	44	#4	2	5'-7"	164	5'-7"	164
B5	12	#5	STR	48'-5"	606	48'-5"	606
K1	15	#4	6	7'-2"	72	7'-2"	72
K2	10	#4	STR	2'-7"	17	2'-7"	17
S1	76	#4	3	8'-6"	432	8'-6"	432
S2	76	#4	3	5'-8"	288	5'-8"	288
S3	133	#4	3	4'-10"	429	4'-10"	429
S4	57	#4	4	5'-10"	222	5'-10"	222
* S5	131	#5	5	6'-4"	865	--	--
REINFORCING STEEL				2305	LBS.	2305	LBS.
* EPOXY COATED REINF. STEEL				865	LBS.		
7500 P.S.I. CONCRETE				18.7	CU. YDS.	18.5	CU. YDS.
0.6" Ø L.R. STRANDS				No. 32		No. 32	

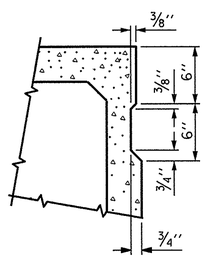

SHEAR KEY DETAIL

NOTE: OMIT SHEAR KEY ON OUTSIDE FACE OF EXTERIOR BOX BEAMS.

GRADE 270 STRANDS	
	0.6" Ø L.R.
AREA (SQUARE INCHES)	0.217
ULTIMATE STRENGTH (LBS. PER STRAND)	58,600
APPLIED PRESTRESS (LBS. PER STRAND)	43,950

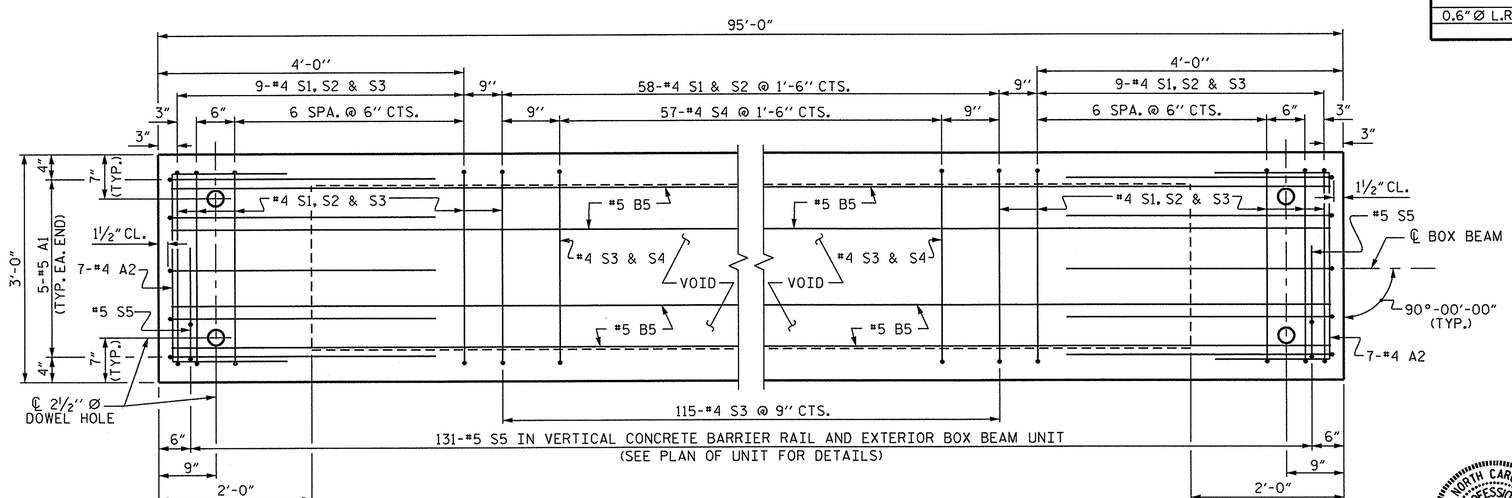

PLAN OF BOX BEAM

EXTERIOR UNIT SHOWN, INTERIOR UNIT SIMILAR EXCEPT OMIT #5 S5 BARS.
FOR LOCATION OF DIAPHRAGMS, SEE PLAN OF UNIT.
FOR REINFORCING STEEL IN DIAPHRAGMS, SEE DIAPHRAGM DETAILS.

NORTH CAROLINA PROFESSIONAL SEAL 14855 ENGINEER DOUGLAS R. CALHOUN
4/23/14

PROJECT NO. 41665.3B
GUILFORD COUNTY
STATION: 16+73.00 -L-

SHEET 3 OF 5

STATE OF NORTH CAROLINA
DEPARTMENT OF TRANSPORTATION
RALEIGH

STANDARD

3'-0" X 3'-3"
PRESTRESSED CONCRETE
BOX BEAM UNIT

REVISIONS						SHEET NO.
NO.	BY:	DATE:	NO.	BY:	DATE:	
1			3			TOTAL SHEETS
2			4			

STD. NO. 39PCBB6_90S_95L

ASSEMBLED BY : William T. Parker DATE : 02/10/14
CHECKED BY : A.K. PATEL DATE : 3/2014
DRAWN BY : DGE 11/11
CHECKED BY : TMG 11/11

23-APR-2014 12:40
S:\DPG2\Doug\DivisionProjects\Guilford*27\bridge27_superstructure.dgn
asorsenglnh

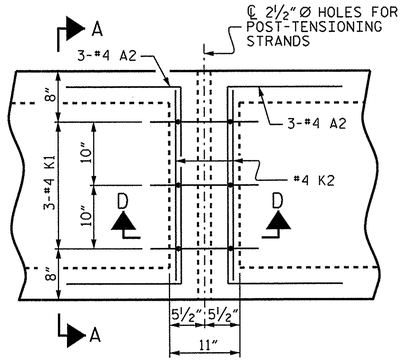

PLAN

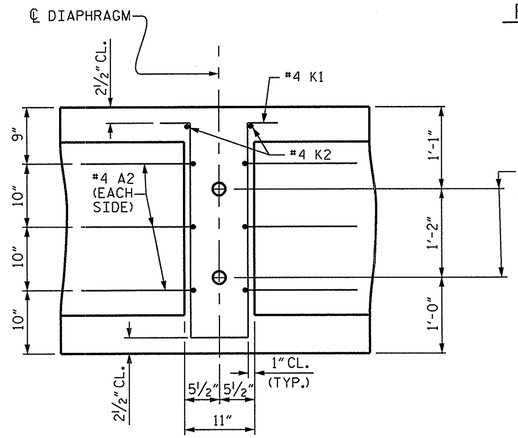

SECTION D-D

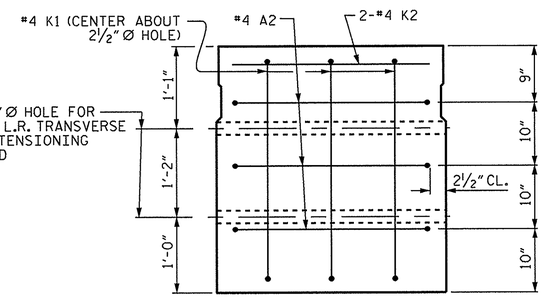

SECTION A-A

VOIDS NOT SHOWN

DOUBLE DIAPHRAGM DETAILS

#4 "S" BARS NOT SHOWN. #4 "S" BARS MAY BE SHIFTED SLIGHTLY TO CLEAR 2½" Ø HOLE.

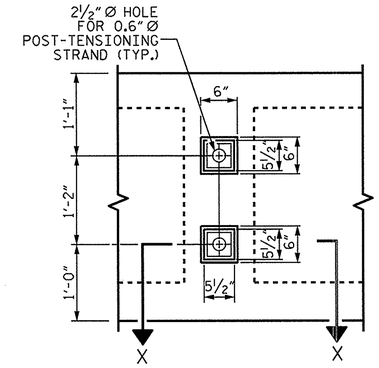

VIEW Y-Y

SHOWING ELEVATION VIEW OF GROUTED RECESS

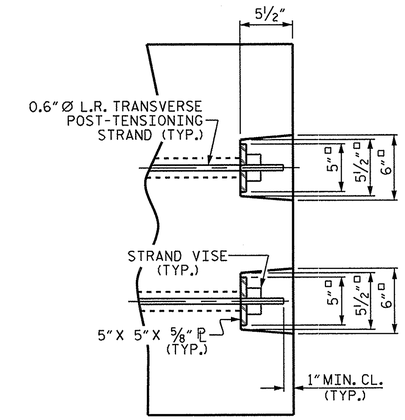

DETAIL "C"

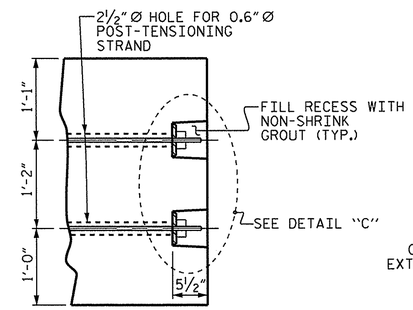

PART SECTION AT RECESS

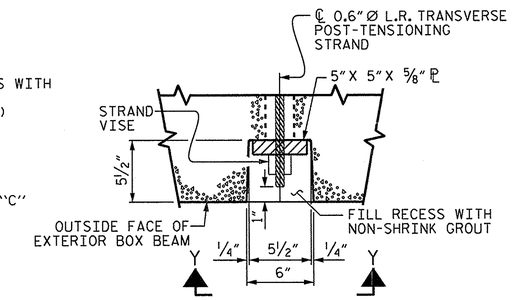

SECTION X-X

SHOWING PLAN VIEW OF GROUTED RECESS

GROUTED RECESS DETAIL AT END OF POST-TENSIONED STRANDS OF EXTERIOR BOX BEAM

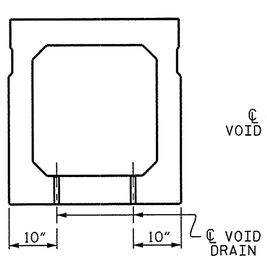

SECTION B-B

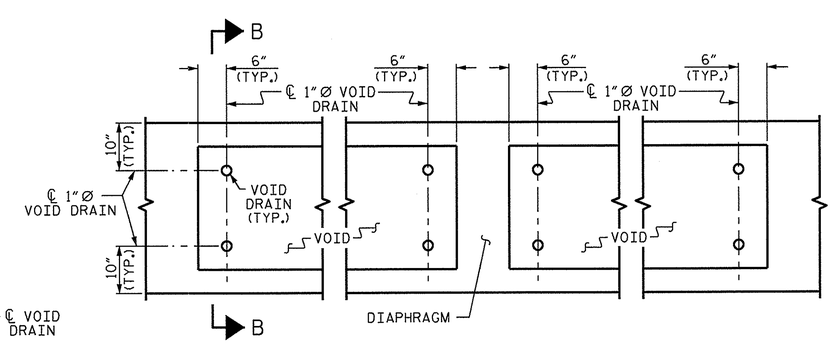

PART PLAN

VOID DRAIN DETAILS

(DIMENSIONS SHOWN ARE TYPICAL FOR EACH VOID)

DEAD LOAD DEFLECTION AND CAMBER	
	3'-0" x 3'-3"
95' BOX BEAM UNIT	0.6"Ø L.R. STRAND
CAMBER (SLAB ALONE IN PLACE)	3½" ↑
DEFLECTION DUE TO SUPERIMPOSED DEAD LOAD**	1" ↓
FINAL CAMBER	2½" ↑

** INCLUDES FUTURE WEARING SURFACE

PROJECT NO. 41665.3B

GUILFORD COUNTY

STATION: 16+73.00 -L-

SHEET 4 OF 5

STATE OF NORTH CAROLINA
DEPARTMENT OF TRANSPORTATION
RALEIGH

STANDARD

3'-0" X 3'-3"
PRESTRESSED CONCRETE
BOX BEAM UNIT

NORTH CAROLINA PROFESSIONAL SEAL 14855 ENGINEER DOUGLAS R. CALHOUN
4/23/14

REVISIONS						SHEET NO.
NO.	BY:	DATE:	NO.	BY:	DATE:	TOTAL SHEETS
1			3			
2			4			

ASSEMBLED BY : William T. Parker DATE : 02/10/14
CHECKED BY : A.K. PATEL DATE : 3/2014

DRAWN BY : DGB 15/1/05
CHECKED BY : GMG 6/1/05

ADDED 7/11/05
REV. 5/1/06 TLA/GM
REV. 10/1/11 MAA/GM

23-APR-2014 12:39
S:\DPG2\Doug\DivisionProjects\Guilford#27\bridge27_superstructure.dgn
asorsenginh

STD.NO.39PCBB7_90S

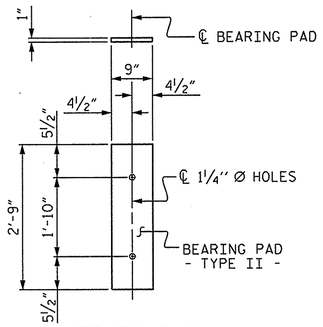

FIXED END

(TYPE II - 20 REQ'D)

ELASTOMERIC BEARING DETAILS

ELASTOMER IN ALL BEARINGS SHALL BE 60 DUROMETER HARDNESS.

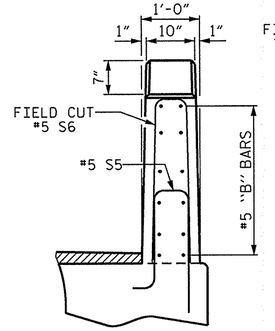

END VIEW

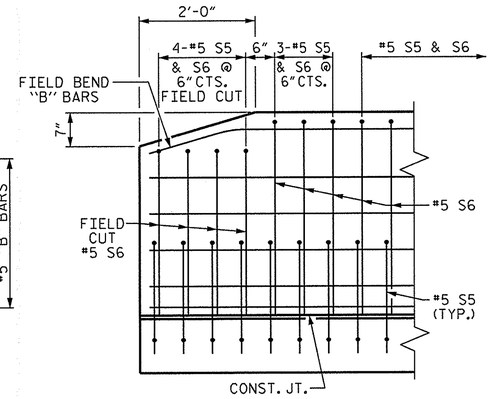

SIDE VIEW

END OF RAIL DETAILS

BOX BEAM UNITS REQUIRED			
	NUMBER	LENGTH	TOTAL LENGTH
EXTERIOR B.B.	2	95'-0"	190'-0"
INTERIOR B.B.	8	95'-0"	760'-0"
TOTAL	10	———	950'-0"

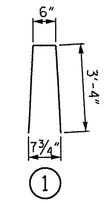

BAR TYPE

BAR DIMENSIONS ARE OUT TO OUT

BILL OF MATERIAL FOR VERTICAL CONCRETE BARRIER RAIL					
BAR	BARS PER PAIR OF EXTERIOR UNITS	SIZE	TYPE	LENGTH	WEIGHT
	95' UNIT				
* B11	96	#5	STR	23'-4"	2336
* S6	262	#5	1	7'-2"	1958
* EPOXY COATED REINFORCING STEEL			LBS.		4294
CLASS AA CONCRETE			CU.YDS.		25.5
TOTAL VERTICAL CONCRETE BARRIER RAIL			LN. FT.		190.0

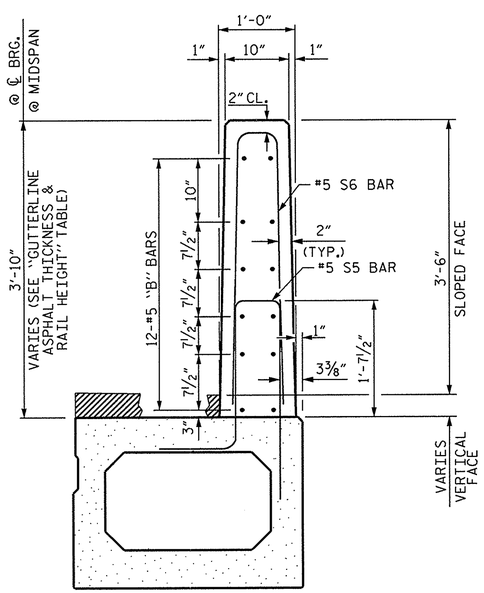

SECTION THRU RAIL

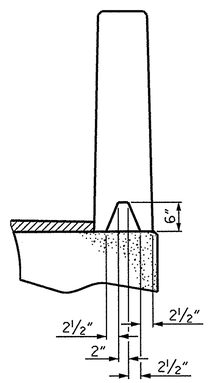

SECTION S-S

AT DAM IN OPEN JOINT
(THIS IS TO BE USED ONLY WHEN SLIP FORM IS USED)

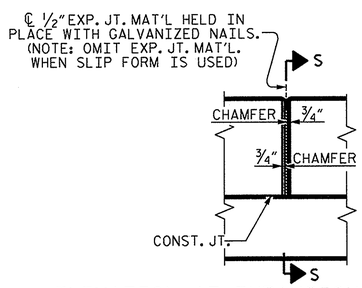

ELEVATION AT EXPANSION JOINTS

VERTICAL CONCRETE BARRIER RAIL DETAILS

GUTTERLINE ASPHALT THICKNESS & RAIL HEIGHT		
	ASPHALT OVERLAY THICKNESS @ MID-SPAN	RAIL HEIGHT @ MID-SPAN
95' UNITS	1½"	3'-7½"

PROJECT NO. 41665.3B

GUILFORD COUNTY

STATION: 16+73.00 -L-

SHEET 5 OF 5

STATE OF NORTH CAROLINA
DEPARTMENT OF TRANSPORTATION
RALEIGH

STANDARD

3'-0" X 3'-3"
PRESTRESSED CONCRETE
BOX BEAM UNIT

NORTH CAROLINA PROFESSIONAL SEAL 14855 ENGINEER DOUGLAS R. CALHOUN
4/23/14

REVISIONS						SHEET NO.
NO.	BY:	DATE:	NO.	BY:	DATE:	TOTAL SHEETS
1			3			
2			4			

STD. NO. 39PCBB8_90S

ASSEMBLED BY : William T. Parker DATE : 02/10/14
CHECKED BY : A.K. PATEL DATE : 3/2014

DRAWN BY : DGE 10/11
CHECKED BY : TMG 11/11

23-APR-2014 12:39
S:\DPG2\Doug\DivisionProjects\Guilford#27\bridge27_superstructure.dgn
asorsengin

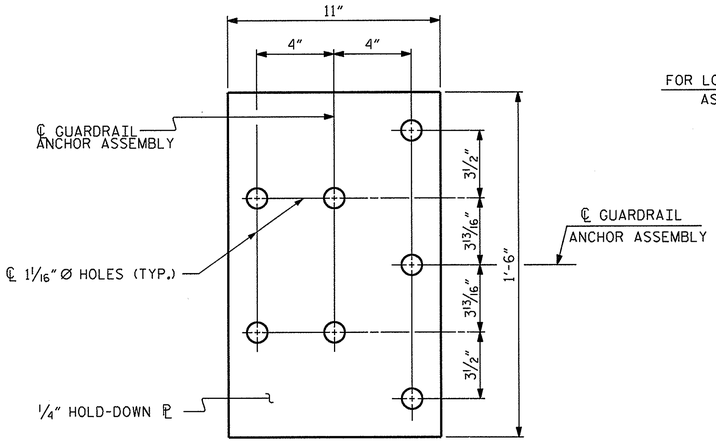

PLAN

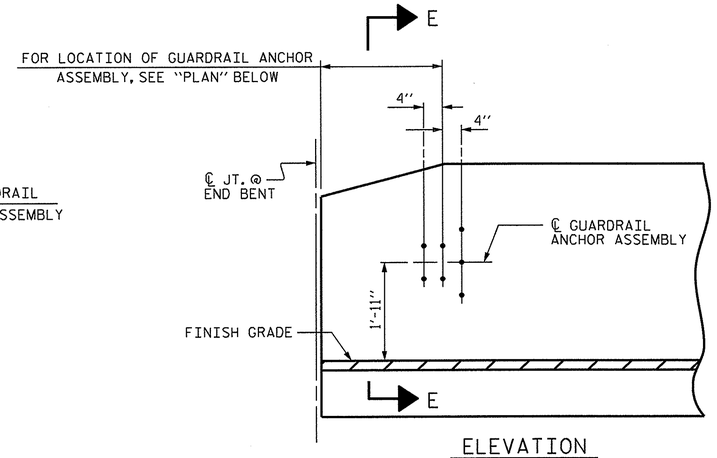

ELEVATION

NOTES

THE GUARDRAIL ANCHOR ASSEMBLY SHALL CONSIST OF A 1/4" HOLD DOWN PLATE AND 7 - 7/8" Ø BOLTS WITH NUTS AND WASHERS.

THE HOLD-DOWN PLATE SHALL CONFORM TO AASHTO M270 GRADE 36. AFTER FABRICATION, THE HOLD-DOWN PLATE SHALL BE HOT-DIP GALVANIZED IN ACCORDANCE WITH AASHTO M111.

BOLTS SHALL CONFORM TO THE REQUIREMENTS OF ASTM A307 AND NUTS SHALL CONFORM TO THE REQUIREMENTS OF AASHTO M291. BOLTS, NUTS AND WASHERS SHALL BE GALVANIZED. (AT THE CONTRACTOR'S OPTION, STAINLESS STEEL BOLTS, NUTS AND WASHERS MAY BE USED AS AN ALTERNATE FOR THE 7/8" Ø GALVANIZED BOLTS, NUTS AND WASHERS. THEY SHALL CONFORM TO OR EXCEED THE MECHANICAL REQUIREMENTS OF ASTM A307. THE USE OF THIS ALTERNATE SHALL BE APPROVED BY THE ENGINEER.)

THE GUARDRAIL ANCHOR ASSEMBLY IS REQUIRED AT ALL POINTS WHERE APPROACH GUARDRAIL IS TO BE ATTACHED TO THE END OF BARRIER RAIL. FOR POINTS OF ATTACHMENT, SEE SKETCH.

AFTER INSTALLATION, THE EXPOSED THREAD OF THE BOLT SHALL BE BURRED WITH A SHARP POINTED TOOL.

THE COST OF THE GUARDRAIL ANCHOR ASSEMBLY SHALL BE INCLUDED IN THE UNIT CONTRACT PRICE BID FOR VERTICAL CONCRETE BARRIER RAIL.

THE VERTICAL REINFORCING BARS MAY BE SHIFTED SLIGHTLY IN THE VERTICAL CONCRETE BARRIER RAIL TO CLEAR ASSEMBLY BOLTS.

THE 1 1/4" Ø HOLES SHALL BE FORMED OR DRILLED WITH A CORE BIT. IMPACT TOOLS WILL NOT BE PERMITTED. ANY CONCRETE DAMAGED BY THIS WORK SHALL BE REPAIRED TO THE SATISFACTION OF THE ENGINEER.

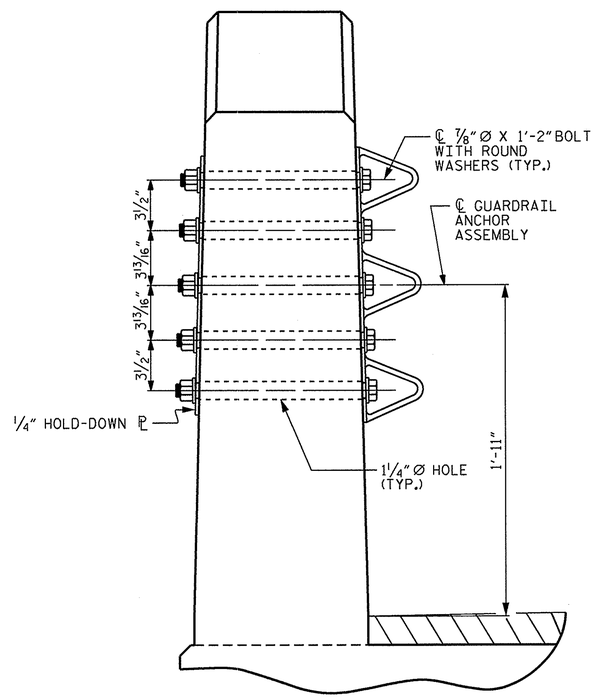

SECTION E-E

GUARDRAIL ANCHOR ASSEMBLY DETAILS

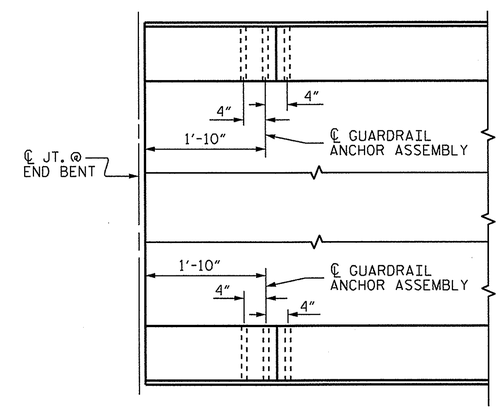

PLAN

LOCATION OF ANCHORS FOR GUARDRAIL

END BENT #1 SHOWN, END BENT #2 SIMILAR.

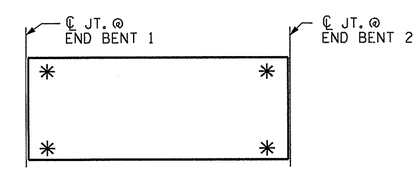

SKETCH SHOWING POINTS OF ATTACHMENT

✳ DENOTES GUARDRAIL ANCHOR ASSEMBLY

PROJECT NO. 41665.3B

GUILFORD COUNTY

STATION: 16+73.00 -L-

STATE OF NORTH CAROLINA
DEPARTMENT OF TRANSPORTATION
RALEIGH

STANDARD
GUARDRAIL ANCHORAGE FOR VERTICAL CONCRETE BARRIER RAIL

NORTH CAROLINA PROFESSIONAL SEAL 14855 ENGINEER DOUGLAS R. CALHOUN
4/23/14

REVISIONS							SHEET NO.
NO.	BY:	DATE:	NO.	BY:	DATE:		TOTAL SHEETS
1			3				
2			4				

STD. NO. GRA3

ASSEMBLED BY: William T. Parker		DATE: 02/10/14	
CHECKED BY: A.K. PATEL		DATE: 3/2014	
DRAWN BY: MAA 5/10	REV. 10/1/11	MAA/GM	
CHECKED BY: GM 5/10	REV. 12/5/11	MAA/GM	
	REV. 6/13	MAA/GM	

23-APR-2014 12:39
S:\DPG2\Doug\DivisionProjects\Guilford#27\bridge27_superstructure.dgn
asorsenginh

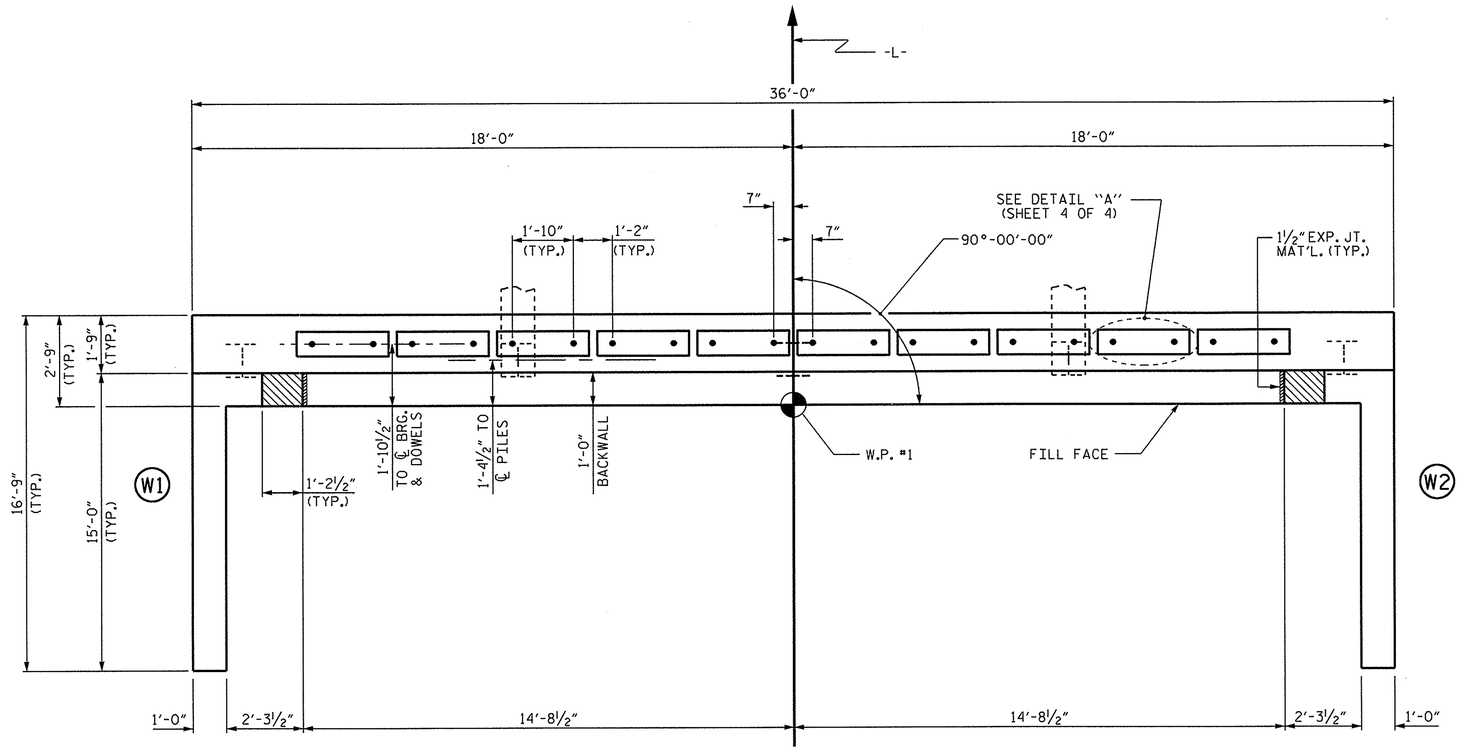

PLAN

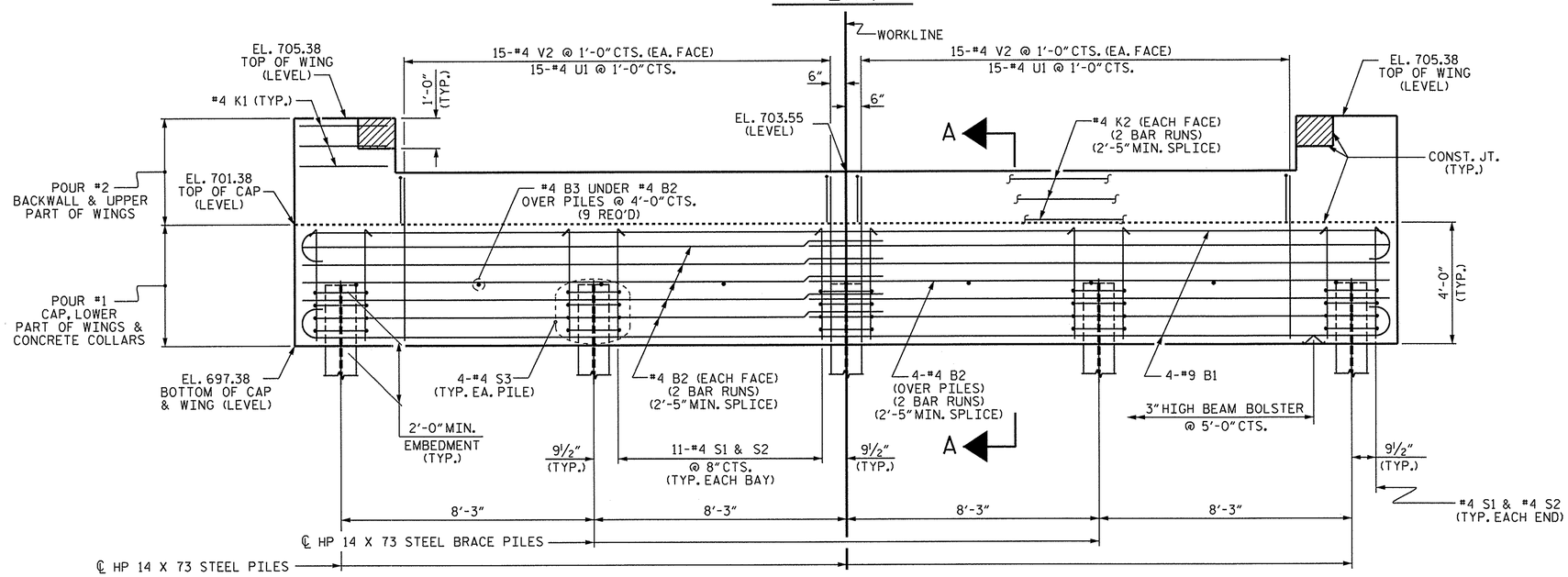

ELEVATION

WINGS NOT SHOWN FOR CLARITY.
FOR SECTION A-A, SEE SHEET 4 OF 4.
CONCRETE COLLARS FOR STEEL PILES NOT SHOWN IN PLAN AND ELEVATION VIEWS FOR CLARITY.
SEE "CORROSION PROTECTION FOR STEEL PILES DETAIL", SHEET 4 OF 4.

NOTES

STIRRUPS IN CAP MAY BE SHIFTED AS NECESSARY TO CLEAR DOWELS.

THE CONCRETE IN THE SHADED AREA OF THE WING SHALL BE POURED AFTER THE VERTICAL CONCRETE BARRIER RAIL IS CAST IF SLIP FORMING IS USED.

FOR PILE SPLICE DETAILS, SEE SHEET 4 OF 4.

FOR WING DETAILS, SEE SHEET 3 OF 4.

PROJECT NO. 41665.3B
GUILFORD COUNTY
STATION: 16+73.00 -L-

SHEET 1 OF 4

STATE OF NORTH CAROLINA
DEPARTMENT OF TRANSPORTATION
RALEIGH

SUBSTRUCTURE

END BENT 1

NORTH CAROLINA PROFESSIONAL SEAL 14855 ENGINEER DOUGLAS R. CALHOUN
4/23/14

REVISIONS						SHEET NO.
NO.	BY:	DATE:	NO.	BY:	DATE:	TOTAL SHEETS
1			3			
2			4			

ASSEMBLED BY : William T. Parker	DATE : 02/10/14
CHECKED BY : A.K. PATEL	DATE : 3/2014
DRAWN BY : WJH 12/11	
CHECKED BY : AAC 12/11	

23-APR-2014 12:38
S:\DPG2\Doug\DivisionProjects\Guilford#27\bridge27_substructure.dgn
asorsenglnh

STD. NO. EB_30_90S4_39BB

NOTES

STIRRUPS IN CAP MAY BE SHIFTED AS NECESSARY TO CLEAR DOWELS.

THE CONCRETE IN THE SHADED AREA OF THE WING SHALL BE POURED AFTER THE VERTICAL CONCRETE BARRIER RAIL IS CAST IF SLIP FORMING IS USED.

FOR PILE SPLICE DETAILS, SEE SHEET 4 OF 4.

FOR WING DETAILS, SEE SHEET 3 OF 4.

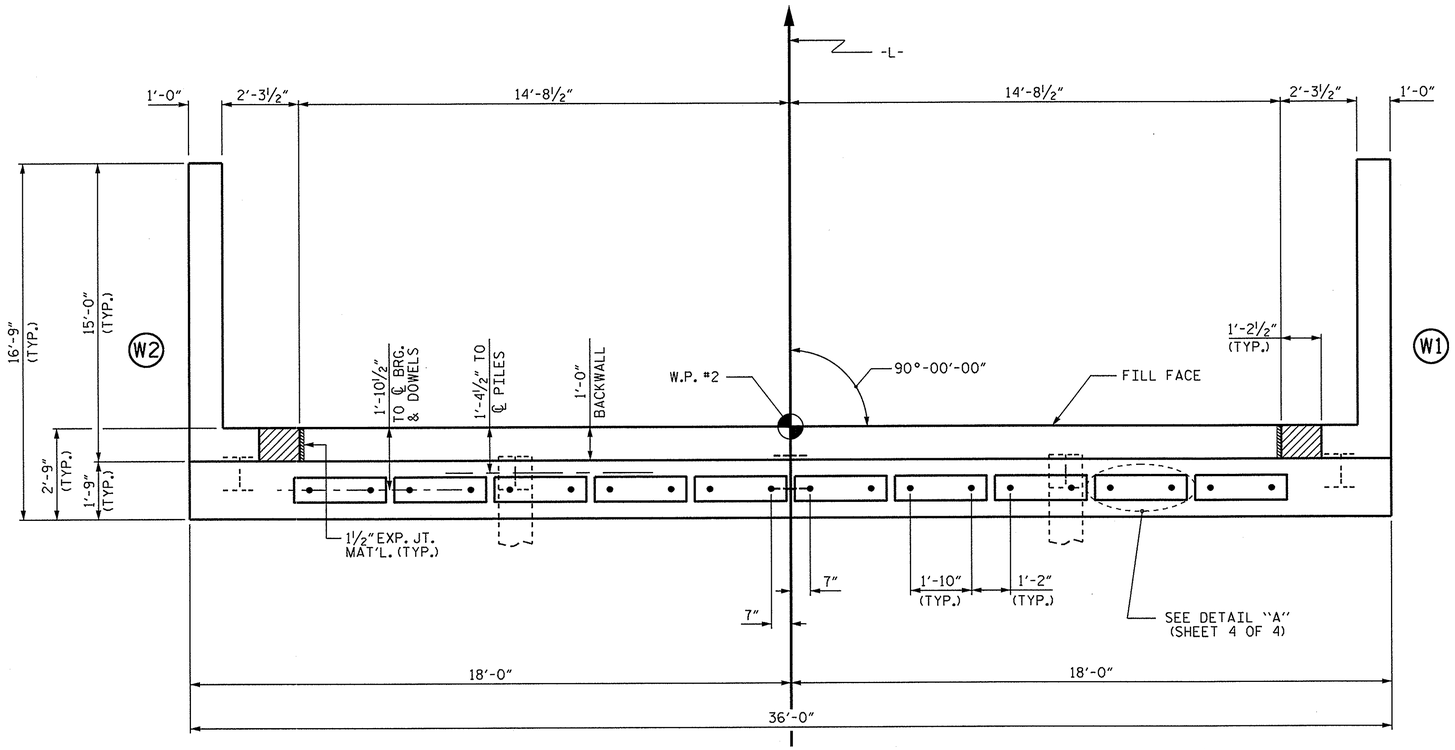

PLAN

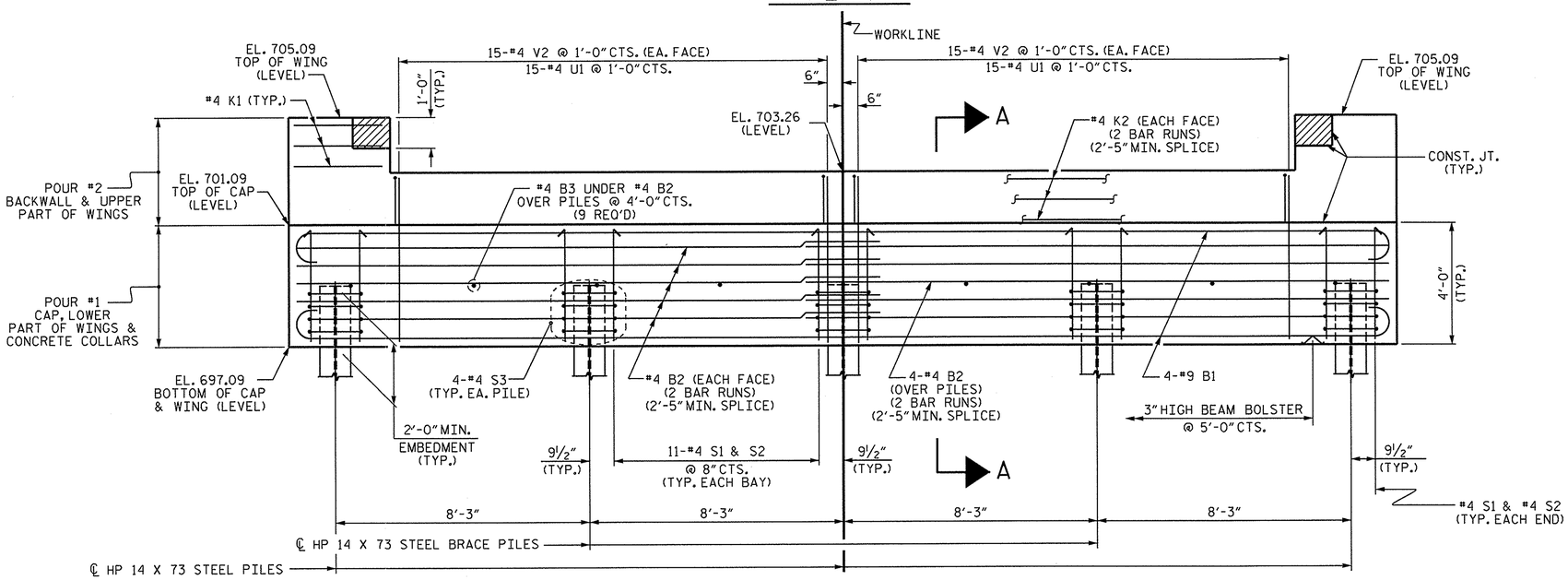

ELEVATION

WINGS NOT SHOWN FOR CLARITY.
FOR SECTION A-A, SEE SHEET 4 OF 4.
CONCRETE COLLARS FOR STEEL PILES NOT SHOWN IN PLAN AND ELEVATION VIEWS FOR CLARITY.
SEE "CORROSION PROTECTION FOR STEEL PILES DETAIL", SHEET 4 OF 4.

PROJECT NO. 41665.3B
GUILFORD COUNTY
STATION: 16+73.00 -L-

SHEET 2 OF 4

STATE OF NORTH CAROLINA
DEPARTMENT OF TRANSPORTATION
RALEIGH

SUBSTRUCTURE

END BENT 2

NORTH CAROLINA PROFESSIONAL SEAL 14855 ENGINEER DOUGLAS R. CALHOUN
4/23/14

REVISIONS						SHEET NO.
NO.	BY:	DATE:	NO.	BY:	DATE:	
1			3			TOTAL SHEETS
2			4			

ASSEMBLED BY : William T. Parker	DATE : 02/10/14
CHECKED BY : A.K. PATEL	DATE : 3/2014
DRAWN BY : WJH 12/11	
CHECKED BY : AAC 12/11	

23-APR-2014 12:38
S:\DPG2\Doug\DivisionProjects\Guilford#27\bridge27_substructure.dgn
asorsenglnh

STD. NO. EB_30_90S4_39BB

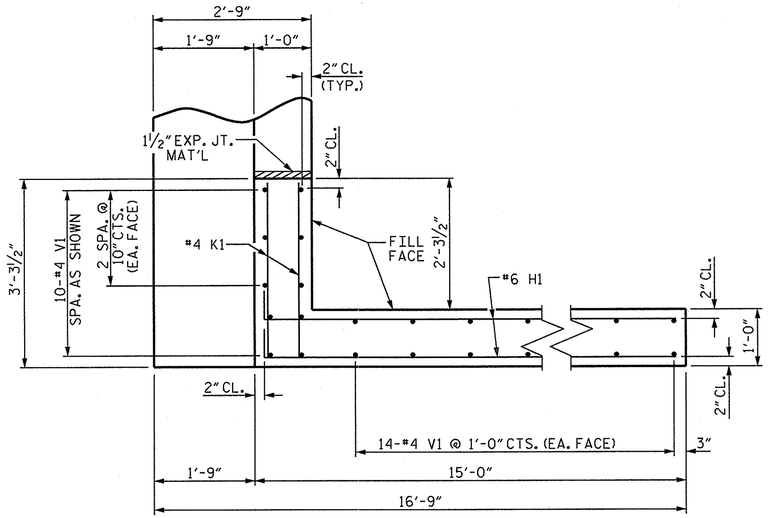

PLAN OF WING (W1)

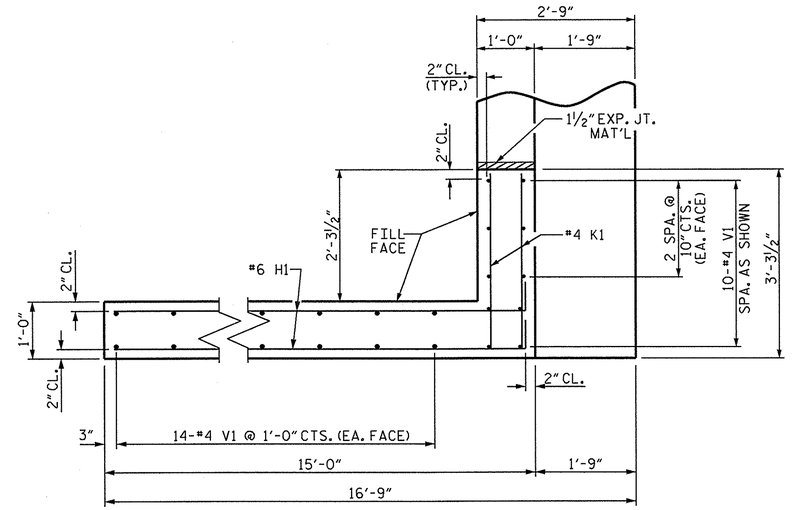

PLAN OF WING (W2)

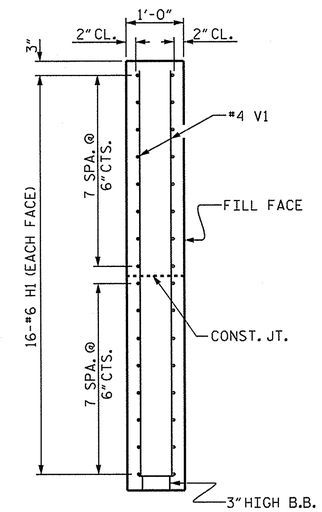

SECTION X-X

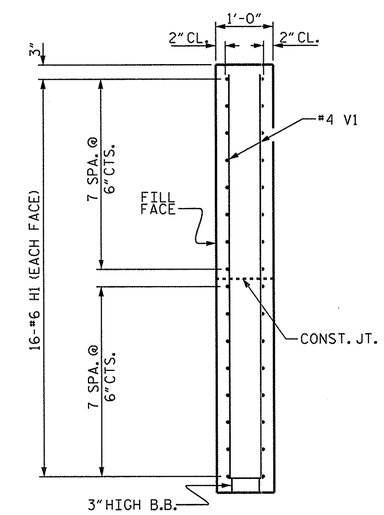

SECTION Y-Y

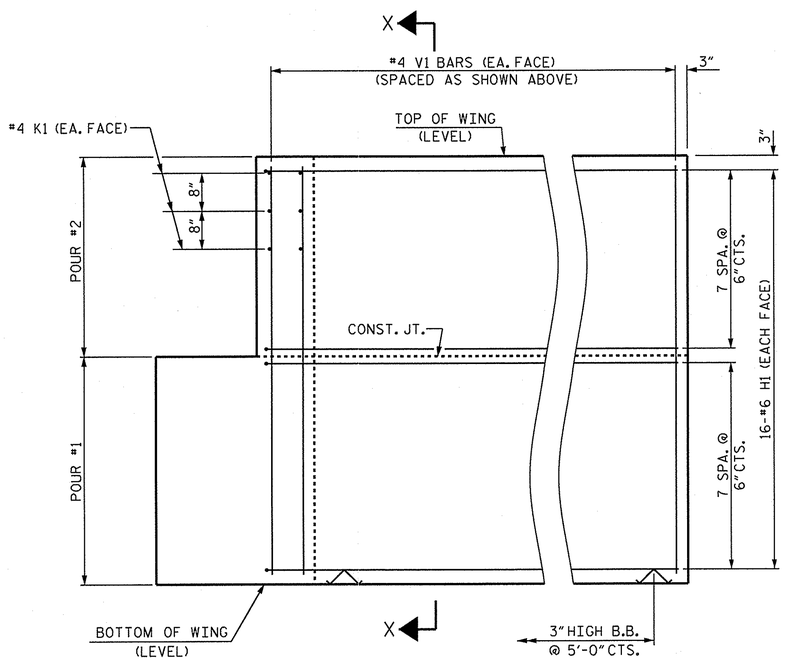

ELEVATION OF WING (W1)

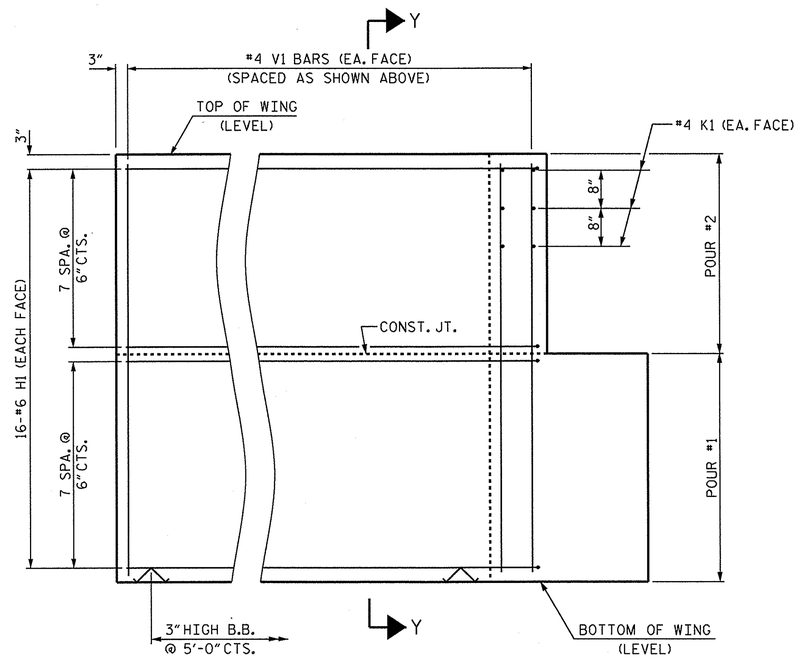

ELEVATION OF WING (W2)

WING DETAILS

PROJECT NO. 41665.3B

GUILFORD COUNTY

STATION: 16+73.00 -L-

SHEET 3 OF 4

STATE OF NORTH CAROLINA
DEPARTMENT OF TRANSPORTATION
RALEIGH

SUBSTRUCTURE

END BENT
WING DETAILS

NORTH CAROLINA PROFESSIONAL SEAL 14855 ENGINEER DOUGLAS R. CALHOUN
4/22/14

REVISIONS						SHEET NO.
NO.	BY:	DATE:	NO.	BY:	DATE:	TOTAL SHEETS
1			3			
2			4			

ASSEMBLED BY : William T. Parker DATE : 02/10/14
CHECKED BY : A.K. PATEL DATE : 3/2014

DRAWN BY : WJH 12/11
CHECKED BY : AAC 12/11

23-APR-2014 12:38
S:\DPG2\Doug\DivisionProjects\Guilford#27\bridge27_substructure.dgn
asorsenginh

STD. NO. EB_30_90S4_39BB

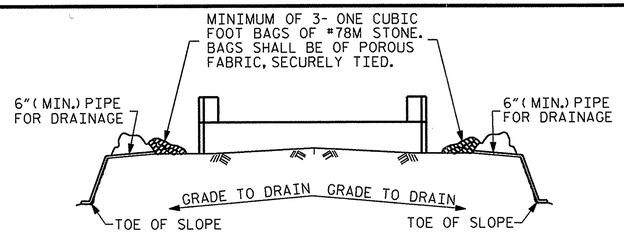

BAGGED STONE AND PIPE SHALL BE PLACED IMMEDIATELY AFTER COMPLETION OF END BENT EXCAVATION. PIPE MAY BE EITHER CONCRETE, CORRUGATED STEEL, CORRUGATED ALUMINUM ALLOY, OR CORRUGATED PLASTIC. PERFORATED PIPE WILL NOT BE ALLOWED.

BAGGED STONE SHALL REMAIN IN PLACE UNTIL THE ENGINEER DIRECTS THAT IT BE REMOVED. THE CONTRACTOR SHALL REMOVE AND DISPOSE OF SILT ACCUMULATIONS AT BAGGED STONE WHEN SO DIRECTED BY THE ENGINEER. BAGS SHALL BE REMOVED AND REPLACED WHENEVER THE ENGINEER DETERMINES THAT THEY HAVE DETERIORATED AND LOST THEIR EFFECTIVENESS.

NO SEPARATE PAYMENT WILL BE MADE FOR THIS WORK AND THE ENTIRE COST OF THIS WORK SHALL BE INCLUDED IN THE UNIT CONTRACT PRICE BID FOR THE SEVERAL PAY ITEMS.

TEMPORARY DRAINAGE AT END BENT

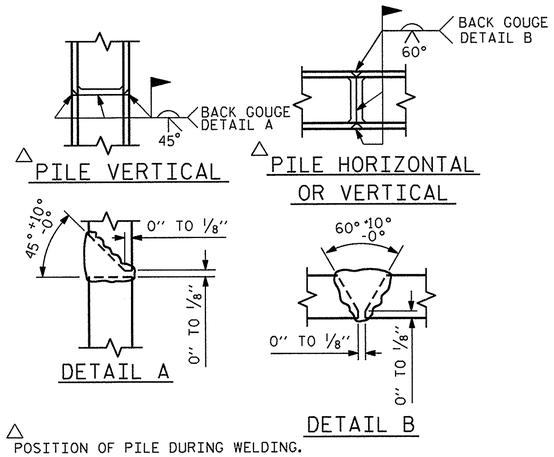

△ POSITION OF PILE DURING WELDING.

PILE SPLICE DETAILS

BAR TYPES

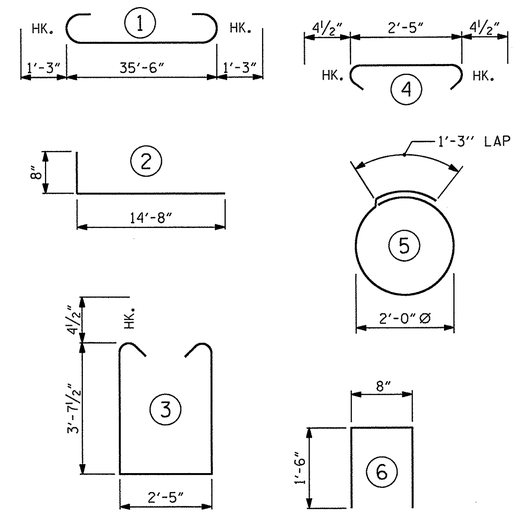

ALL BAR DIMENSIONS ARE OUT TO OUT.

END BENT 1	END BENT 2
HP 14 X 73 STEEL PILES	HP 14 X 73 STEEL PILES
NO: 5 LIN. FT.= 125	NO: 5 LIN. FT.= 75

BILL OF MATERIAL FOR ONE END BENT

BAR	NO.	SIZE	TYPE	LENGTH	WEIGHT
B1	8	#9	1	38'-0"	1034
B2	28	#4	STR	19'-1"	357
B3	9	#4	STR	2'-5"	15
D1	20	#8	STR	2'-3"	120
H1	64	#6	2	15'-4"	1474
K1	12	#4	STR	2'-11"	23
K2	12	#4	STR	19'-1"	153
S1	46	#4	3	10'-5"	320
S2	46	#4	4	3'-2"	97
S3	20	#4	5	7'-7"	101
U1	30	#4	6	3'-8"	73
V1	76	#4	STR	7'-8"	389
V2	60	#4	STR	5'-10"	234
REINFORCING STEEL (FOR ONE END BENT)					4390 LBS.

CLASS A CONCRETE BREAKDOWN (FOR ONE END BENT)

POUR #1	CAP, LOWER PART OF WINGS & COLLARS	20.1 C.Y.
POUR #2	BACKWALL & UPPER PART OF WINGS	8.0 C.Y.
TOTAL CLASS A CONCRETE		28.1 C.Y.

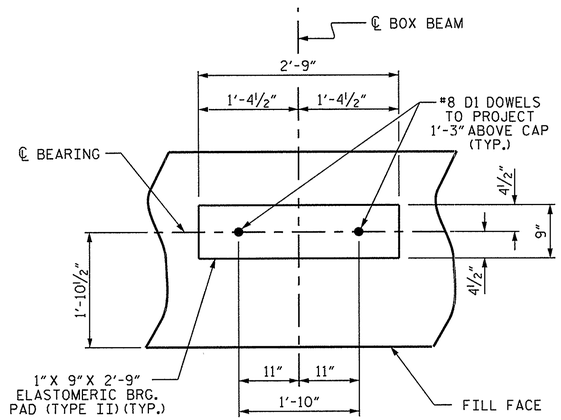

DETAIL "A"

(END BENT 1 SHOWN, END BENT 2 SIMILAR BY ROTATION)

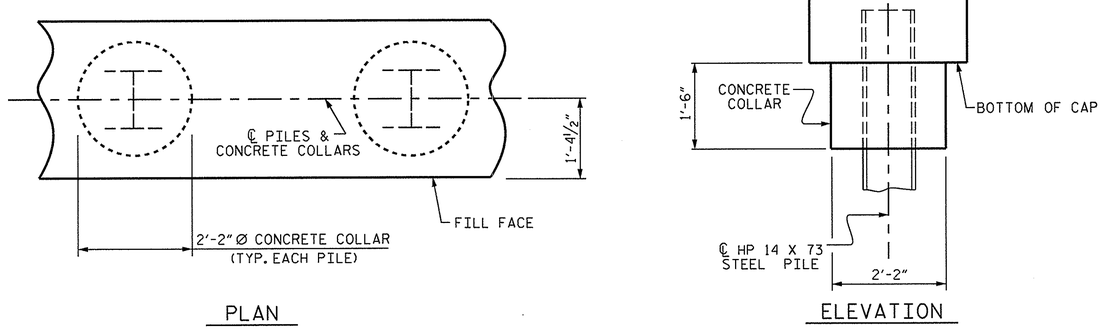

PLAN

ELEVATION

CORROSION PROTECTION FOR STEEL PILES DETAIL

(END BENT 1 SHOWN, END BENT 2 SIMILAR BY ROTATION)

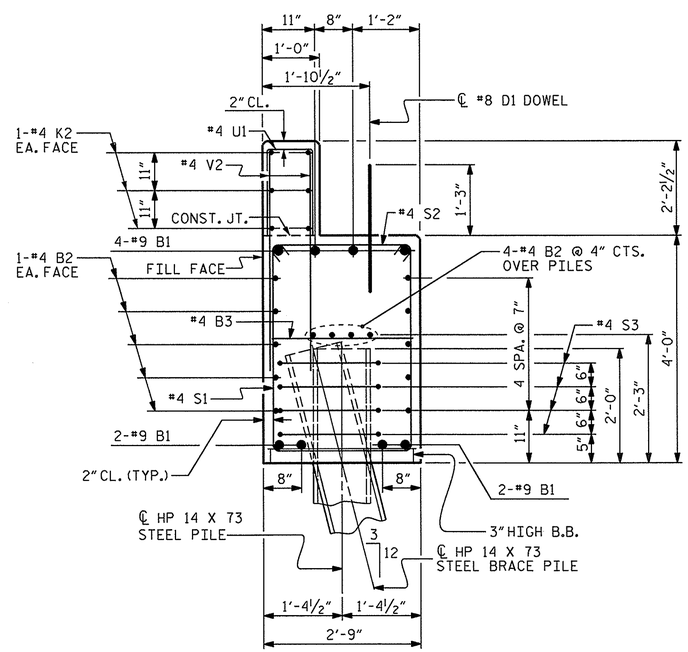

SECTION A-A

(CONCRETE COLLAR NOT SHOWN FOR CLARITY. SEE "CORROSION PROTECTION FOR STEEL PILES DETAIL.")

NORTH CAROLINA PROFESSIONAL SEAL 14855 ENGINEER DOUGLAS R. CALHOUN
4/23/14

PROJECT NO. 41665.3B
GUILFORD COUNTY
STATION: 16+73.00 -L-

SHEET 4 OF 4

STATE OF NORTH CAROLINA
DEPARTMENT OF TRANSPORTATION
RALEIGH

SUBSTRUCTURE

END BENT 1 & 2 DETAILS

REVISIONS						SHEET NO.
NO.	BY:	DATE:	NO.	BY:	DATE:	
1			3			TOTAL SHEETS
2			4			

ASSEMBLED BY :	William T. Parker	DATE :	02/10/14
CHECKED BY :	A.K. PATEL	DATE :	3/2014
DRAWN BY :	WJH 12/11		
CHECKED BY :	AAC 12/11		

23-APR-2014 12:38
S:\DPG2\Doug\DivisionProjects\Guilford#27\bridge27_substructure.dgn
asorsenginh

STD. NO. EB_30_90S4_39BB

NOTES :

REMOVE EXISTING VERTICAL ABUTMENT NEAR END BENT 1 AND SLOPE BACK BANK AT 1.5:1. PLACE CLASS II RIP RAP AS DIRECTED BY ENGINEER.

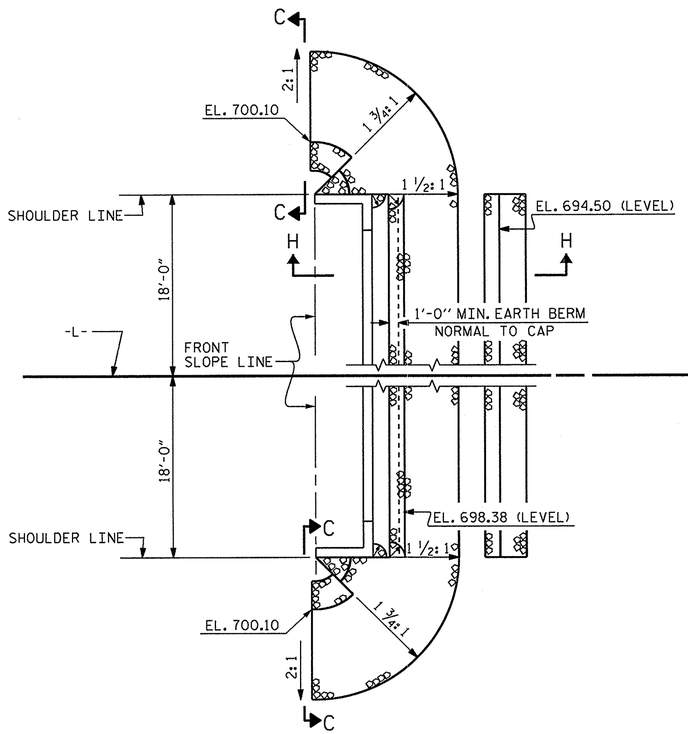

@ END BENT 1

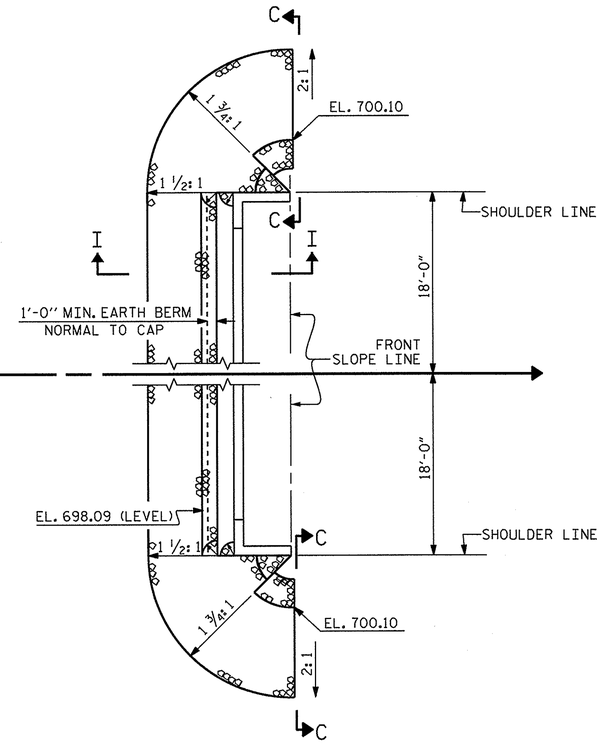

@ END BENT 2

SHOULDER RIP RAP IS HIGHER THAN BERM RIP RAP

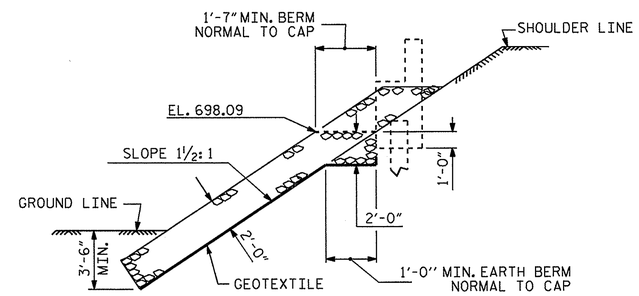

SECTION I-I

ESTIMATED QUANTITIES		
BRIDGE @ STA. 16+73.00 -L-	RIP RAP CLASS II (2'-0" THICK)	GEOTEXTILE FOR DRAINAGE
	TONS	SQUARE YARDS
END BENT 1	143	158
END BENT 2	97	108

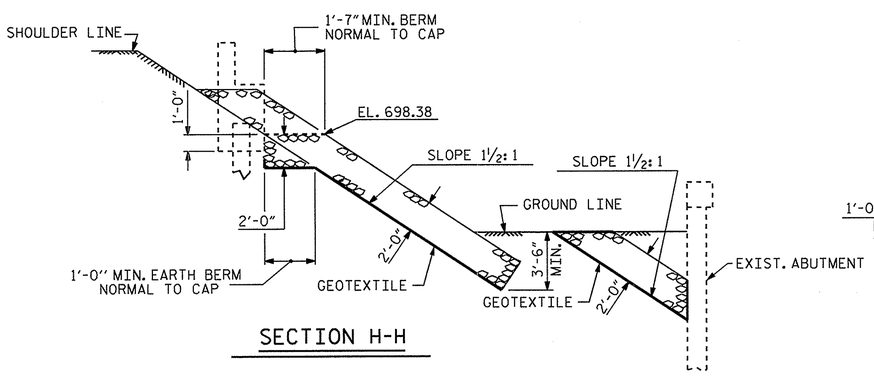

SECTION H-H

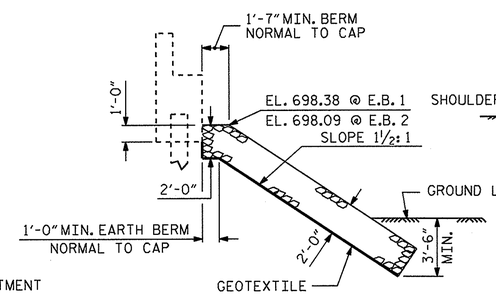

℄ SECTION
BERM RIP RAPPED

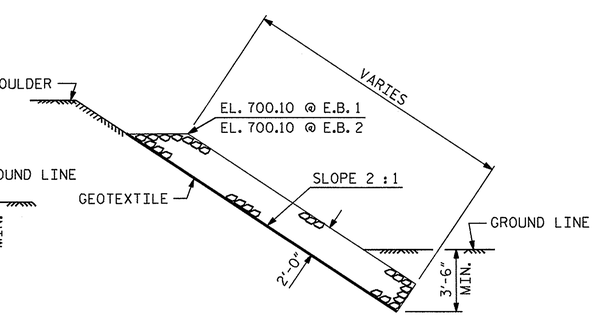

SECTION C-C

PROJECT NO. 41665.3B

GUILFORD COUNTY

STATION: 16+73.00 -L-

STATE OF NORTH CAROLINA
DEPARTMENT OF TRANSPORTATION
RALEIGH

STANDARD

RIP RAP DETAILS

NORTH CAROLINA PROFESSIONAL SEAL 14855 ENGINEER DOUGLAS R. CALHOUN
4/23/14

REVISIONS							SHEET NO.
NO.	BY:	DATE:	NO.	BY:	DATE:		TOTAL SHEETS
1			3				
2			4				

STD. NO. RR1

ASSEMBLED BY : William T. Parker	DATE : 02/10/14		
CHECKED BY : A.K. PATEL	DATE : 3/2014		
DRAWN BY : REK 1/84	REV. 5/1/06R	TLA/GM	
CHECKED BY : RDU 1/84	REV. 10/1/11	MAA/GM	
	REV. 12/21/11	MAA/GM	

23-APR-2014 12:37
S:\DPG2\Doug\DivisionProjects\Guilford#27\bridge27_riprap_app_slab.dgn
asorsenglish

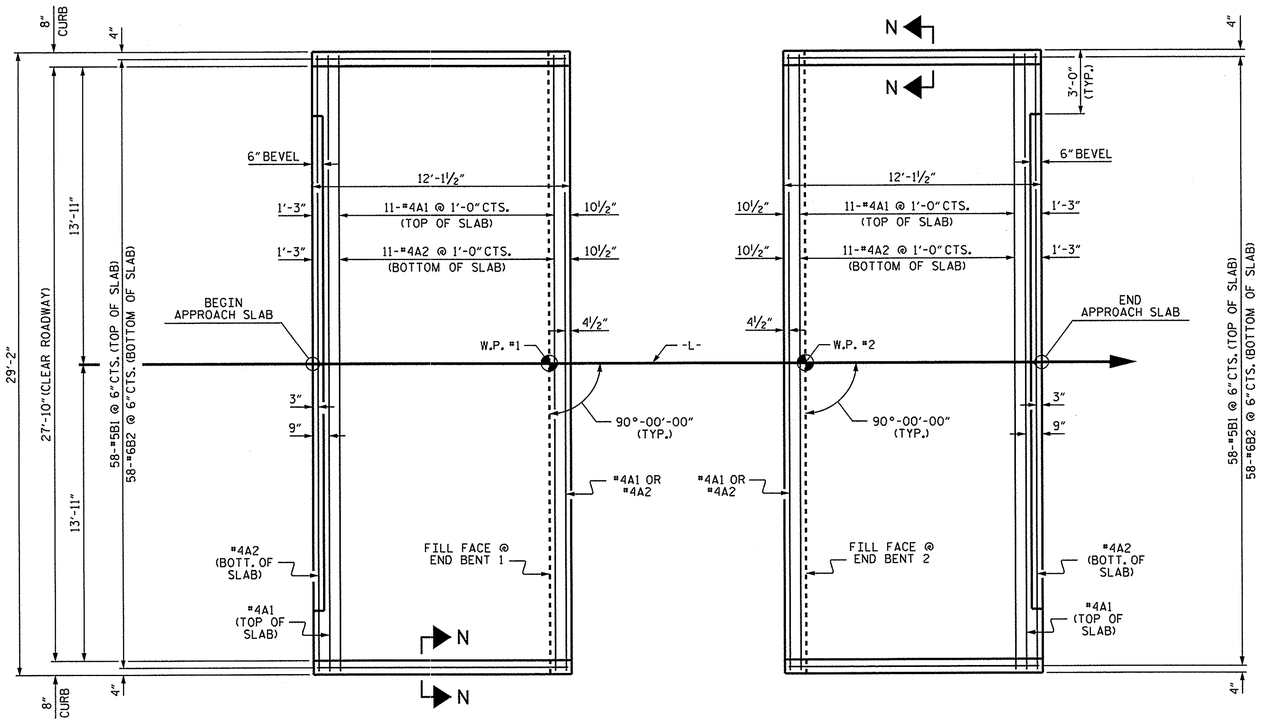

PLAN @ END BENT 1

PLAN @ END BENT 2

DIMENSIONS SHOWN ARE TYPICAL FOR BOTH APPROACH SLABS

NOTES

FOR BRIDGE APPROACH FILL INCLUDING GEOTEXTILE, 4"Ø DRAINAGE PIPE, AND #78M STONE BACKFILL, SEE ROADWAY PLANS.

GEOTEXTILE SHALL BE TYPE 1 IN ACCORDANCE WITH THE STANDARD SPECIFICATIONS SECTION 1056.

#78M STONE BACKFILL (CLASS V SELECT MATERIAL) SHALL BE IN ACCORDANCE WITH STANDARD SPECIFICATIONS SECTION 1016.

#78M STONE BACKFILL IS TO BE CONTINUOUS ALONG FILL FACE OF BACKWALL FROM OUTSIDE EDGE TO OUTSIDE EDGE OF APPROACH SLAB.

FOR THE 4"Ø DRAINAGE PIPE OUTLET(S), SEE ROADWAY STANDARD DRAWINGS.

AREA BETWEEN THE WINGWALL AND APPROACH SLAB SHALL BE GRADED TO DRAIN THE WATER AWAY FROM THE FILL FACE OF THE BRIDGE AND SHALL BE PAVED. SEE ROADWAY PLANS.

APPROACH SLAB GROOVING IS NOT REQUIRED.

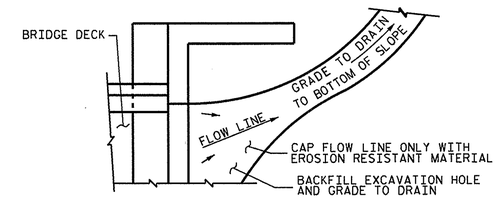

NOTE: IF THE APPROACH SLAB IS NOT CONSTRUCTED IMMEDIATELY AFTER THE BACKFILLING OF THE END BENT EXCAVATION, GRADE TO DRAIN TO THE BOTTOM OF THE SLOPE AND PROVIDE EROSION RESISTANT MATERIAL, SUCH AS FIBERGLASS ROVING OR AS DIRECTED BY THE ENGINEER TO PREVENT SOIL EROSION AND TO PROTECT THE AREA ADJACENT TO THE STRUCTURE. THE CONTRACTOR WILL BE REQUIRED TO REMOVE THESE MATERIALS PRIOR TO CONSTRUCTION OF THE APPROACH SLAB.

TEMPORARY DRAINAGE DETAIL

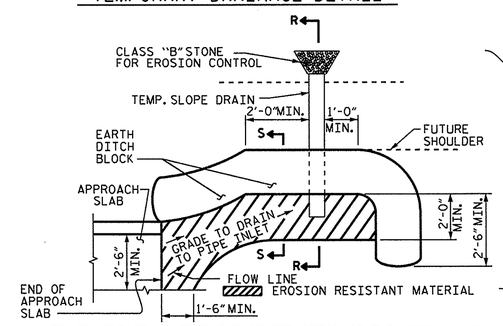

PLAN VIEW

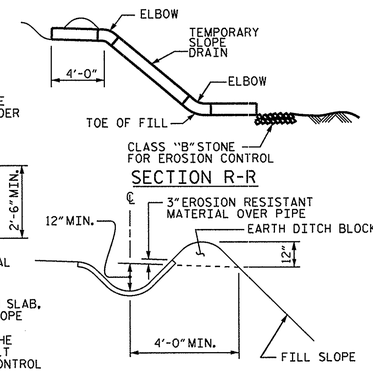

SECTION S-S

NOTE: IMMEDIATELY AFTER THE CONSTRUCTION OF THE APPROACH SLAB, THE CONTRACTOR SHALL PROVIDE TEMPORARY BERM AND SLOPE DRAIN. CONTRACTOR SHALL GRADE TO PIPE INLET AND PROVIDE EROSION RESISTANT MATERIAL AS SHOWN. THE EROSION RESISTANT MATERIAL SHALL BE EITHER 1) ASPHALT PLANT MIX, TYPE 1 OR TYPE 2, MIN. 2" DEPTH, 2) EROSION CONTROL MAT, OR 3) CONCRETE, AS DIRECTED BY THE ENGINEER. THE SLOPE DRAIN SHALL CONSIST OF A NON-PERFORATED TEMPORARY DRAINAGE PIPE, 12 INCHES IN DIAMETER.

TEMPORARY BERM AND SLOPE DRAIN DETAILS

(TO BE USED WHEN SHOULDER BERM GUTTER IS REQUIRED)

BILL OF MATERIAL

APPROACH SLAB AT EB 1

BAR	NO.	SIZE	TYPE	LENGTH	WEIGHT
* A1	13	#4	STR	28'-10"	250
A2	13	#4	STR	28'-10"	250
* B1	58	#5	STR	11'-2"	676
B2	58	#6	STR	11'-8"	1016
REINFORCING STEEL				LBS.	1266
* EPOXY COATED REINFORCING STEEL				LBS.	926
CLASS AA CONCRETE				C. Y.	15.6

APPROACH SLAB AT EB 2

BAR	NO.	SIZE	TYPE	LENGTH	WEIGHT
* A1	13	#4	STR	28'-10"	250
A2	13	#4	STR	28'-10"	250
* B1	58	#5	STR	11'-2"	676
B2	58	#6	STR	11'-8"	1016
REINFORCING STEEL				LBS.	1266
* EPOXY COATED REINFORCING STEEL				LBS.	926
CLASS AA CONCRETE				C. Y.	15.6

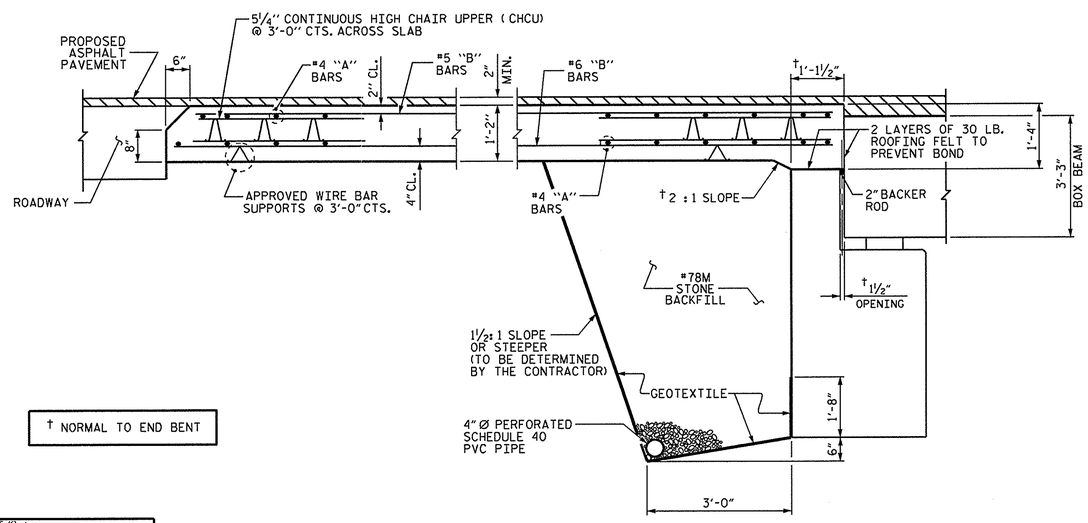

† NORMAL TO END BENT

SECTION THRU SLAB

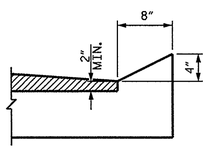

SECTION N-N

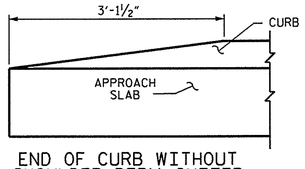

END OF CURB WITHOUT SHOULDER BERM GUTTER

CURB DETAILS

SPLICE LENGTHS		
BAR SIZE	EPOXY COATED	UNCOATED
#4	2'-0"	1'-9"
#5	2'-6"	2'-2"
#6	3'-10"	2'-7"

PROJECT NO. 41665.3B

GUILFORD COUNTY

STATION: 16+73.00 -L-

STATE OF NORTH CAROLINA
DEPARTMENT OF TRANSPORTATION
RALEIGH

STANDARD
BRIDGE APPROACH SLAB
FOR PRESTRESSED CONCRETE
BOX BEAM UNIT
(SUB-REGIONAL TIER)
90° SKEW

NORTH CAROLINA PROFESSIONAL SEAL 14855 ENGINEER DOUGLAS R. PRUHOW 4/23/14

REVISIONS						SHEET NO.
NO.	BY:	DATE:	NO.	BY:	DATE:	
1			3			TOTAL SHEETS
2			4			

ASSEMBLED BY : William T. Parker DATE : 02/10/14
CHECKED BY : A.K. PATEL DATE : 3/2014
DRAWN BY : MAA 11/11
CHECKED BY : AAC 11/11

23-APR-2014 12:37
S:\DPG2\Doug\DivisionProjects\Guilford#27\bridge27_riprap_app_slab.dgn
asorsenghn

STD. NO. BAS_BB_30_90S

STANDARD NOTES

DESIGN DATA:

SPECIFICATIONS	A.A.S.H.T.O. (CURRENT)
LIVE LOAD	SEE PLANS
IMPACT ALLOWANCE	SEE A.A.S.H.T.O.
STRESS IN EXTREME FIBER OF	
STRUCTURAL STEEL - AASHTO M270 GRADE 36	20,000 LBS. PER SQ. IN.
- AASHTO M270 GRADE 50W	27,000 LBS. PER SQ. IN.
- AASHTO M270 GRADE 50	27,000 LBS. PER SQ. IN.
REINFORCING STEEL IN TENSION	
GRADE 60	24,000 LBS. PER SQ. IN.
CONCRETE IN COMPRESSION	1,200 LBS. PER SQ. IN.
CONCRETE IN SHEAR	SEE A.A.S.H.T.O.
STRUCTURAL TIMBER - TREATED OR	
UNTREATED - EXTREME FIBER STRESS	1,800 LBS. PER SQ. IN.
COMPRESSION PERPENDICULAR TO GRAIN OF TIMBER	375 LBS. PER SQ. IN.
EQUIVALENT FLUID PRESSURE OF EARTH	30 LBS. PER CU. FT. (MINIMUM)

MATERIAL AND WORKMANSHIP:

EXCEPT AS MAY OTHERWISE BE SPECIFIED ON PLANS OR IN THE SPECIAL PROVISIONS, ALL MATERIAL AND WORKMANSHIP SHALL BE IN ACCORDANCE WITH THE 2012 "STANDARD SPECIFICATIONS FOR ROADS AND STRUCTURES" OF THE N. C. DEPARTMENT OF TRANSPORTATION.

STEEL SHEET PILING FOR PERMANENT OR TEMPORARY APPLICATIONS SHALL BE HOT ROLLED.

CONCRETE:

UNLESS OTHERWISE REQUIRED ON PLANS, CLASS A CONCRETE SHALL BE USED FOR ALL PORTIONS OF ALL STRUCTURES WITH THE EXCEPTION THAT: CLASS AA CONCRETE SHALL BE USED IN BRIDGE SUPERSTRUCTURES, ABUTMENT BACKWALLS, AND APPROACH SLABS; AND CLASS B CONCRETE SHALL BE USED FOR SLOPE PROTECTION AND RIP RAP.

CONCRETE CHAMFERS:

UNLESS OTHERWISE NOTED ON THE PLANS, ALL EXPOSED CORNERS ON STRUCTURES SHALL BE CHAMFERED 3/4" WITH THE FOLLOWING EXCEPTIONS: TOP CORNERS OF CURBS MAY BE ROUNDED TO 1-1/2" RADIUS WHICH IS BUILT INTO CURB FORMS; CORNERS OF TRANSVERSE FLOOR EXPANSION JOINTS SHALL BE ROUNDED WITH A 1/4" FINISHING TOOL UNLESS OTHERWISE REQUIRED ON PLANS; AND CORNERS OF EXPANSION JOINTS IN THE ROADWAY FACES AND TOPS OF CURBS AND SIDEWALKS SHALL BE ROUNDED TO A 1/4" RADIUS WITH A FINISHING STONE OR TOOL UNLESS OTHERWISE REQUIRED ON PLANS.

DOWELS:

DOWELS WHEN INDICATED ON PLANS AS FOR CULVERT EXTENSIONS, SHALL BE EMBEDDED AT LEAST 12" INTO THE OLD CONCRETE AND GROUTED INTO PLACE WITH 1:2 CEMENT MORTAR.

ALLOWANCE FOR DEAD LOAD DEFLECTION, SETTLEMENT, ETC. IN CASTING SUPERSTRUCTURES:

BRIDGES SHALL BE BUILT ON THE GRADE OR VERTICAL CURVE SHOWN ON PLANS. SLABS, CURBS AND PARAPETS SHALL CONFORM TO THE GRADE OR CURVE.

ALL DIMENSIONS WHICH ARE GIVEN IN SECTION AND ARE AFFECTED BY DEAD LOAD DEFLECTIONS ARE DIMENSIONS AT CENTER LINE OF BEARING UNLESS OTHERWISE NOTED ON PLANS. IN SETTING FORMS FOR STEEL BEAM BRIDGES AND PRESTRESSED CONCRETE GIRDER BRIDGES, ADJUSTMENTS SHALL BE MADE DUE TO THE DEAD LOAD DEFLECTIONS FOR THE ELEVATIONS SHOWN. WHERE BLOCKS ARE SHOWN OVER BEAMS FOR BUILDING UP TO THE SLAB, THE VERTICAL DIMENSIONS OF THE BLOCKS SHALL BE ADJUSTED BETWEEN BEARINGS TO COMPENSATE FOR DEAD LOAD DEFLECTIONS, VERTICAL CURVE ORDINATE, AND ACTUAL BEAM CAMBER. WHERE BOTTOM OF SLAB IS IN LINE WITH BOTTOM OF TOP FLANGES, DEPTH OF SLAB BETWEEN BEARINGS SHALL BE ADJUSTED TO COMPENSATE FOR DEAD LOAD DEFLECTION, VERTICAL CURVE ORDINATE, AND ACTUAL BEAM CAMBER.

IN SETTING FALSEWORK AND FORMS FOR REINFORCED CONCRETE SPANS, AN ALLOWANCE SHALL BE MADE FOR DEAD LOAD DEFLECTIONS, SETTLEMENT OF FALSEWORK, AND PERMANENT CAMBER WHICH SHALL BE PROVIDED FOR IN ADDITION TO THE ELEVATIONS SHOWN. AFTER REMOVAL OF THE FALSEWORK, THE FINISHED STRUCTURES SHALL CONFORM TO THE PROFILE AND ELEVATIONS SHOWN ON THE PLANS AND CONSTRUCTION ELEVATIONS FURNISHED BY THE ENGINEER.

DETAILED DRAWINGS FOR FALSEWORK OR FORMS FOR BRIDGE SUPERSTRUCTURE AND ANY STRUCTURE OR PARTS OF A STRUCTURE AS NOTED ON THE PLANS SHALL BE SUBMITTED TO THE ENGINEER FOR APPROVAL BEFORE CONSTRUCTION OF THE FALSEWORK OR FORMS IS STARTED.

REINFORCING STEEL:

ALL REINFORCING STEEL SHALL BE DEFORMED. DIMENSIONS RELATIVE TO PLACEMENT OF REINFORCING ARE TO CENTERS OF BARS UNLESS OTHERWISE INDICATED IN THE PLANS. DIMENSIONS ON BAR DETAILS ARE TO CENTERS OF BARS OR ARE OUT TO OUT AS INDICATED ON PLANS.

WIRE BAR SUPPORTS SHALL BE PROVIDED FOR REINFORCING STEEL WHERE INDICATED ON THE PLANS. WHEN BAR SUPPORT PIECES ARE PLACED IN CONTINUOUS LINES, THEY SHALL BE SO PLACED THAT THE ENDS OF THE SUPPORTING WIRES SHALL BE LAPPED TO LOCK LEGS ON ADJOINING PIECES.

STRUCTURAL STEEL:

AT THE CONTRACTOR'S OPTION, HE MAY SUBSTITUTE 7/8" Ø SHEAR STUDS FOR THE 3/4" Ø STUDS SPECIFIED ON THE PLANS. THIS SUBSTITUTION SHALL BE MADE AT THE RATE OF 3 - 7/8" Ø STUDS FOR 4 - 3/4" Ø STUDS, AND STUD SPACING CHANGES SHALL BE MADE AS NECESSARY TO PROVIDE THE SAME EQUIVALENT NUMBER OF 7/8" Ø STUDS ALONG THE BEAM AS SHOWN FOR 3/4" Ø STUDS BASED ON THE RATIO OF 3 - 7/8" Ø STUDS FOR 4 - 3/4" Ø STUDS. STUDS OF THE LENGTH SPECIFIED ON THE PLANS MUST BE PROVIDED. THE MAXIMUM SPACING SHALL BE 2'-0".

EXCEPT AT THE INTERIOR SUPPORTS OF CONTINUOUS BEAMS WHERE THE COVER PLATE IS IN CONTACT WITH BEARING PLATE, THE CONTRACTOR MAY, AT HIS OPTION, SUBSTITUTE FOR THE COVER PLATES DESIGNATED ON THE PLANS COVER PLATES OF THE EQUIVALENT AREA PROVIDED THESE PLATES ARE AT LEAST 5/16" IN THICKNESS AND DO NOT EXCEED A WIDTH EQUAL TO THE FLANGE WIDTH LESS 2" OR A THICKNESS EQUAL TO 2 TIMES THE FLANGE THICKNESS. THE SIZE OF FILLET WELDS SHALL CONFORM TO THE REQUIREMENTS OF THE CURRENT ANSI/AASHTO/AWS "BRIDGE WELDING CODE". ELECTROSLAG WELDING WILL NOT BE PERMITTED.

WITH THE SOLE EXCEPTION OF EDGES AT SURFACES WHICH BEAR ON OTHER SURFACES, ALL SHARP EDGES AND ENDS OF SHAPES AND PLATES SHALL BE SLIGHTLY ROUNDED BY SUITABLE MEANS TO A RADIUS OF APPROXIMATELY 1/16 INCH OR EQUIVALENT FLAT SURFACE AT A SUITABLE ANGLE PRIOR TO PAINTING, GALVANIZING, OR METALLIZING.

HANDRAILS AND POSTS:

METAL STANDARDS AND FACES OF THE CONCRETE END POSTS FOR THE METAL RAIL SHALL BE SET NORMAL TO THE GRADE OF THE CURB, UNLESS OTHERWISE SHOWN ON PLANS. THE METAL RAIL AND TOPS OF CONCRETE POSTS USED WITH THE ALUMINUM RAIL SHALL BE BUILT PARALLEL TO THE GRADE OF THE CURB.

METAL HANDRAILS SHALL BE IN ACCORDANCE WITH THE PLANS. RAILS SHALL BE AS MANUFACTURED FOR BRIDGE RAILING. CASTINGS SHALL BE OF A UNIFORM APPEARANCE. FINS AND OTHER DEFORMATIONS RESULTING FROM CASTING OR OTHERWISE SHALL BE REMOVED IN A MANNER SO THAT A UNIFORM COLORING OF THE COMPLETED CASTING SHALL BE OBTAINED. CASTINGS WITH DISCOLORATIONS OR OF NON-UNIFORM COLORING WILL NOT BE ACCEPTED. CERTIFIED MILL REPORTS ARE REQUIRED FOR METAL RAILS AND POSTS.

SPECIAL NOTES:

GENERALLY, IN CASE OF DISCREPANCY, THIS STANDARD SHEET OF NOTES SHALL GOVERN OVER THE SPECIFICATIONS, BUT THE REMAINDER OF THE PLANS SHALL GOVERN OVER NOTES HEREON, AND SPECIAL PROVISIONS SHALL GOVERN OVER ALL. SEE SPECIFICATIONS ARTICLE 105-4.

ENGLISH

JANUARY, 1990

STD. NO. SN

North Carolina Department of Transportation

Highway Stormwater Program

STORMWATER MANAGEMENT PLAN

FOR LINEAR ROADWAY PROJECTS

(Version 1.2; Released July 2012)

Project/TIP No.: 41665.3B **County(ies):** Guilford

General Project Information

Project No.:	41665.3B	**Project Type:**	Bridge Replacement	**Date:**	9/18/2013
NCDOT Contact:	Galen Cail, PE	**Contractor / Designer:**			
Address:	1590 Mail Service Center Raleigh, NC 27699-1590	**Address:**			
Phone:	919.707.6711	**Phone:**			
Email:	gcail@ncdot.gov	**Email:**			
City/Town:	Kirkman Crossroads	**County(ies):**	Guilford		
River Basin(s):	Cape Fear	**CAMA County?**	No		
Primary Receiving Water:	Hickory Creek	**NCDWQ Stream Index No.:**	17-8.5-(1)b		
NCDWQ Surface Water Classification for Primary Receiving Water	**Primary:**	Water Supply IV (WS-IV)			
	Supplemental:				
Other Stream Classification:	None				
303(d) Impairments:	None				
Buffer Rules in Effect	Randleman Lake				

Project Description

Project Length (lin. Miles or feet):	0.11 miles	**Surrounding Land Use:**	Residental, Farmland

	Proposed Project	**Existing Site**
Project Built-Upon Area (ac.)	0.35 ac.	0.27 ac.
Typical Cross Section Description:	Two 11' lanes	Two 9' lanes
Average Daily Traffic (veh/hr/day):	Design/Future: 1300 (2011) /1300 (2014)	Existing: 1300 (2011)

General Project Narrative:

The project consists of replaceing Bridge #27 on SR 1131 (Burnetts Chapel Rd) over Hickory Creek. The approach work will consist of raising the existing roadway grade and providing grass shoulders and guardrails. Bridge #27 existing 2 span structure (51' total length) will be replaced with a single span structure (95' box beam).

Best Management Practices:
-Promotion of sheet flow and infiltration with grass shoulders except where shoulder berm gutters at the end of the bridge.
-Drainage system outlet to rip rap pad. Existing ditches on the approach side will be realigned and the ditches lined with psrm and outlet onto rip rap pads.
-Removal of existing road fill under bridge will improve bridge conveyance and reduce the bridge opening velocities.

References

STATE PROJECT: 41665.3B

CONTRACT: _____

See Sheet 1-A For Index of Sheets
See Sheet 1-B for Conventional Symbols

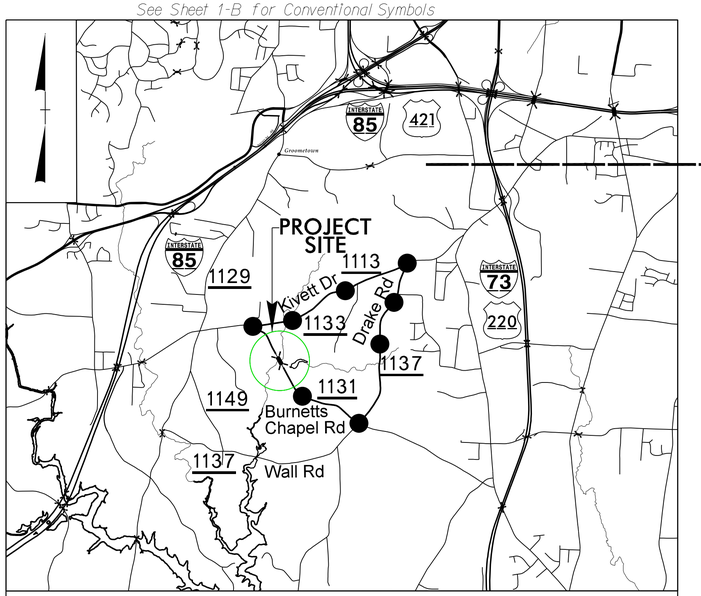

VICINITY MAP

DETOUR ROUTE

STATE OF NORTH CAROLINA
DIVISION OF HIGHWAYS

GUILFORD COUNTY

STATE	STATE PROJECT REFERENCE NO.	SHEET NO.	TOTAL SHEETS
N.C.	41665.3B	1	

STATE PROJ. NO.	F. A. PROJ. NO.	DESCRIPTION
41665.3B		PE

INCOMPLETE PLANS
DO NOT USE FOR R/W ACQUISITION

PRELIMINARY PLANS
DO NOT USE FOR CONSTRUCTION

BUFFER DRAWING
SHEET 1 OF 6

LOCATION: BRIDGE NO. 400027 OVER HICKORY CREEK
ON SR 1131 (BURNETTS CHAPEL ROAD)

TYPE OF WORK: GRADING, DRAINAGE, PAVING, AND STRUCTURE

BUFFER IMPACTS PERMIT

4

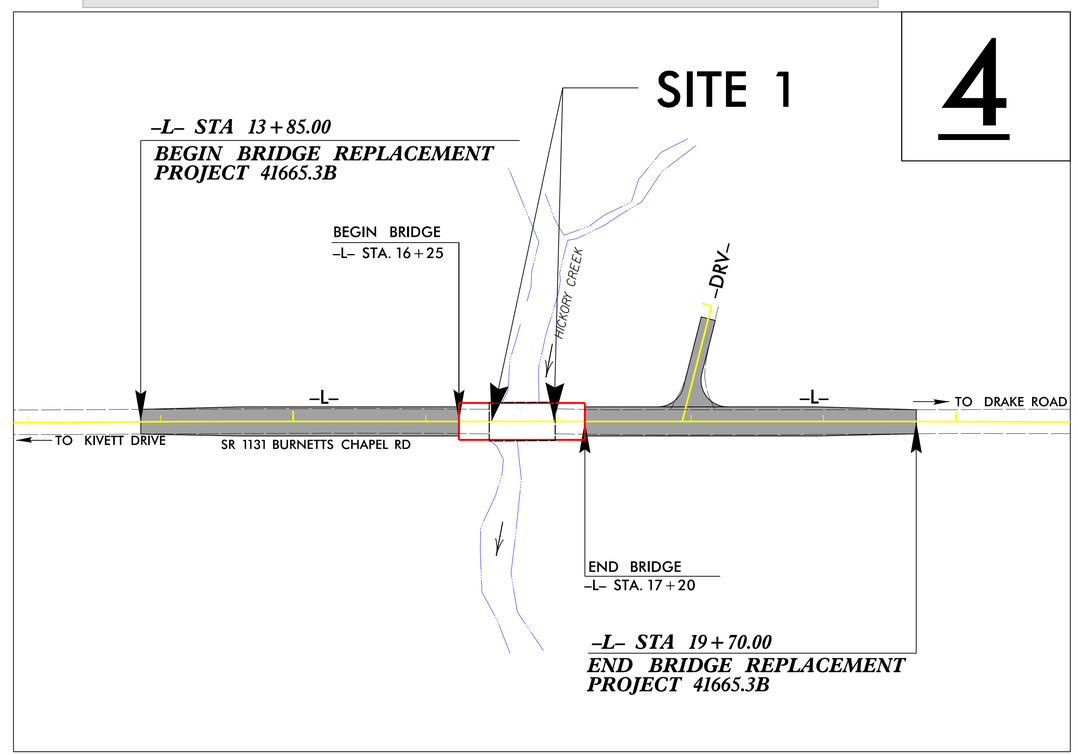

NAD 83/ NSRS 2007

NOTE:
1. THIS PROJECT IS NOT WITHIN ANY MUNICIPAL BOUNDARIES.
2. CLEARING ON THIS PROJECT SHALL BE PERFORMED TO THE LIMITS ESTABLISHED BY METHOD II.

GRAPHIC SCALES

50 25 0 50 100
PLANS

50 25 0 50 100
PROFILE (HORIZONTAL)

10 5 0 10 20
PROFILE (VERTICAL)

DESIGN DATA

ADT 2011 = 1300
ADT 2014 = 1300
DHV = __ %
D = __ %
T = __ % *
V = 50 MPH
* TTST = 7% DUAL __
FUNC CLASS =
RURAL LOCAL
SUB-REGIONAL TIER

PROJECT LENGTH

LENGTH OF ROADWAY PROJECT 17BP.13.R.82	=	0.093 MILES
LENGTH OF STRUCTURE PROJECT 17BP.13.R.82	=	0.018 MILES
TOTAL LENGTH OF PROJECT 17BP.13.R.82	=	0.111 MILES

Prepared In the Office of:
KCI Associates of N.C., P.A.
4601 Six Forks Road
Landmark Center II, Suite 220
Raleigh, NC 27609
Phone (919) 783-9214
Fax (919) 783-9266
http://www.kci.com

2012 STANDARD SPECIFICATIONS

RIGHT OF WAY DATE:
SEPTEMBER 2013

LETTING DATE:
FEBRUARY 2014

NCDOT CONTACT: TIM POWERS, PE

Plans Prepared For:
DIVISION OF HIGHWAYS
1000 Birch Ridge Dr.
Raleigh NC, 27610

CHARLES L. FLOWE, P.E.
PROJECT ENGINEER

BARRY C. SMITH, P.E.
PROJECT DESIGN ENGINEER

HYDRAULICS ENGINEER

SIGNATURE: P.E.

ROADWAY DESIGN ENGINEER

SIGNATURE: P.E.

STATE OF NORTH CAROLINA DEPARTMENT OF TRANSPORTATION

09/08/99
9/16/2013
amkeeter
R:\Hydraulics\PERMITS_Environmental\Drawings\400027_Hyd_prm_buf_TSH.dgn
$$$$SYSTIME$$$$
$$$$DGN$$$$
$$$$USERNAME$$$$

PROJECT REFERENCE NO.	SHEET NO.
R/W SHEET NO.	
ROADWAY DESIGN ENGINEER	HYDRAULICS ENGINEER

INCOMPLETE PLANS
DO NOT USE FOR R/W ACQUISITION

PRELIMINARY PLANS
DO NOT USE FOR CONSTRUCTION

PERMIT DRAWING
SHEET 2 OF 6

DATUM DESCRIPTION

LOCALIZED COORDINATE SYSTEM DEVELOPED FOR THIS PROJECT
BASED ON THE STATE PLANE COORDINATES ESTABLISHED BY
NCDOT FOR MONUMENT "400027-2"
WITH NAD 83/NA 2011 STATE PLANE GRID COORDINATES OF
NORTHING: 806863.0220(ft) EASTING: 1743993.5080(ft)
ELEVATION: 699.40'(ft)
THE AVERAGE COMBINED GRID FACTOR USED ON THIS PROJECT
(GROUND TO GRID) IS: 0.9999211389
THE N.C. LAMBERT GRID BEARING AND
LOCALIZED HORIZONTAL GROUND DISTANCE FROM
"400027-2" TO -L- STATION 13+85.00 IS
N 23° 54' 24.8" W 249.96 ft
LINEAR DIMENSIONS ARE LOCALIZED HORIZONTAL DISTANCES
VERTICAL DATUM USED IS NAVD 88

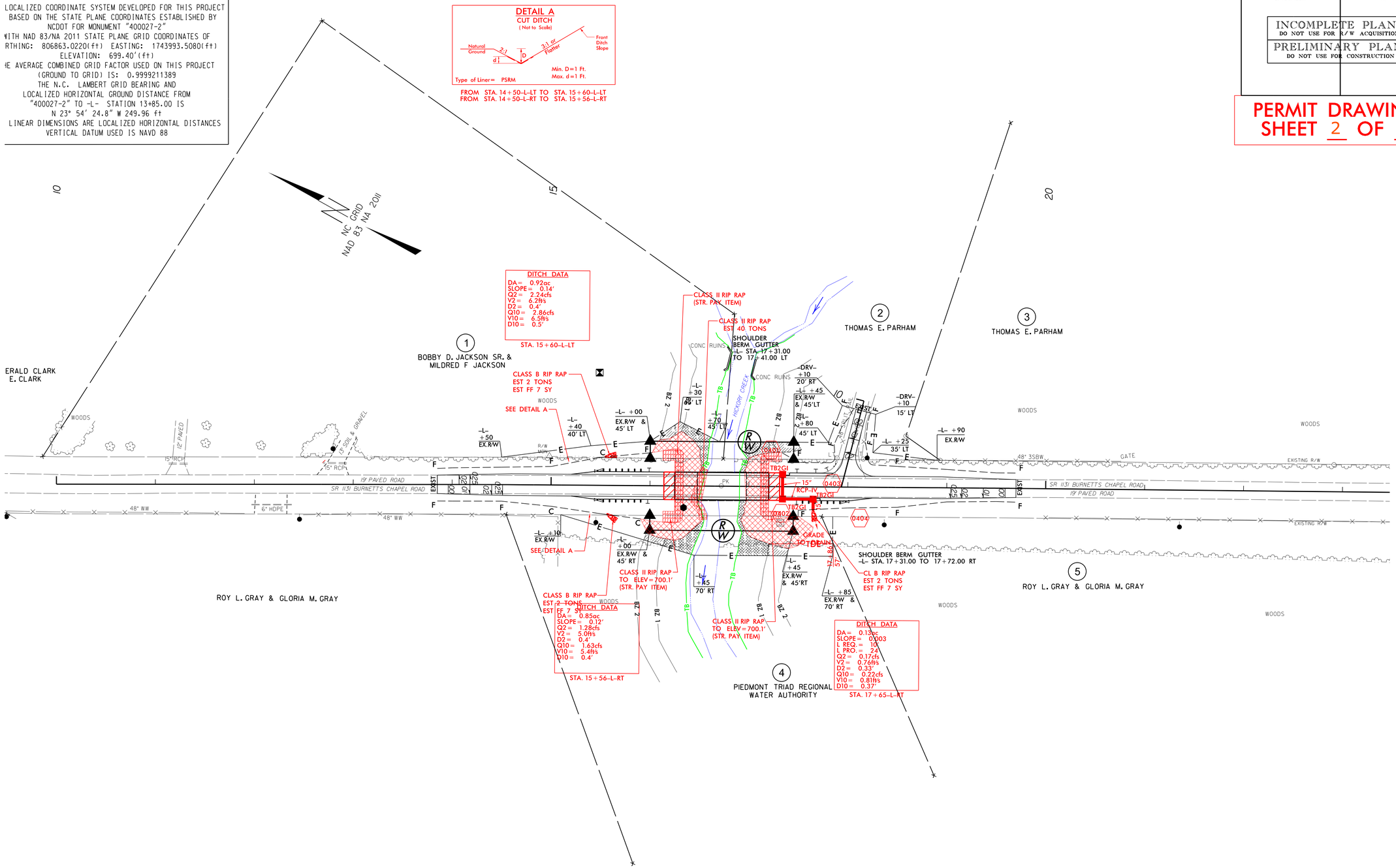

REVISIONS

8/17/99

9/16/2013
amkeeter
R:\Hydraulics\PERMITS_Environmental\Drawings\400027_Hyd_prm_buf.dgn

PROJECT REFERENCE NO.	SHEET NO.
R/W SHEET NO.	
ROADWAY DESIGN ENGINEER	HYDRAULICS ENGINEER

INCOMPLETE PLANS
DO NOT USE FOR R/W ACQUISITION

PRELIMINARY PLANS
DO NOT USE FOR CONSTRUCTION

PERMIT DRAWING
SHEET 3 OF 6

DATUM DESCRIPTION

LOCALIZED COORDINATE SYSTEM DEVELOPED FOR THIS PROJECT
BASED ON THE STATE PLANE COORDINATES ESTABLISHED BY
NCDOT FOR MONUMENT "400027-2"
WITH NAD 83/NA 2011 STATE PLANE GRID COORDINATES OF
NORTHING: 806863.0220(ft) EASTING: 1743993.5080(ft)
ELEVATION: 699.40'(ft)
THE AVERAGE COMBINED GRID FACTOR USED ON THIS PROJECT
(GROUND TO GRID) IS: 0.9999211389
THE N.C. LAMBERT GRID BEARING AND
LOCALIZED HORIZONTAL GROUND DISTANCE FROM
"400027-2" TO -L- STATION 13+85.00 IS
N 23° 54' 24.8" W 249.96 ft
LINEAR DIMENSIONS ARE LOCALIZED HORIZONTAL DISTANCES
VERTICAL DATUM USED IS NAVD 88

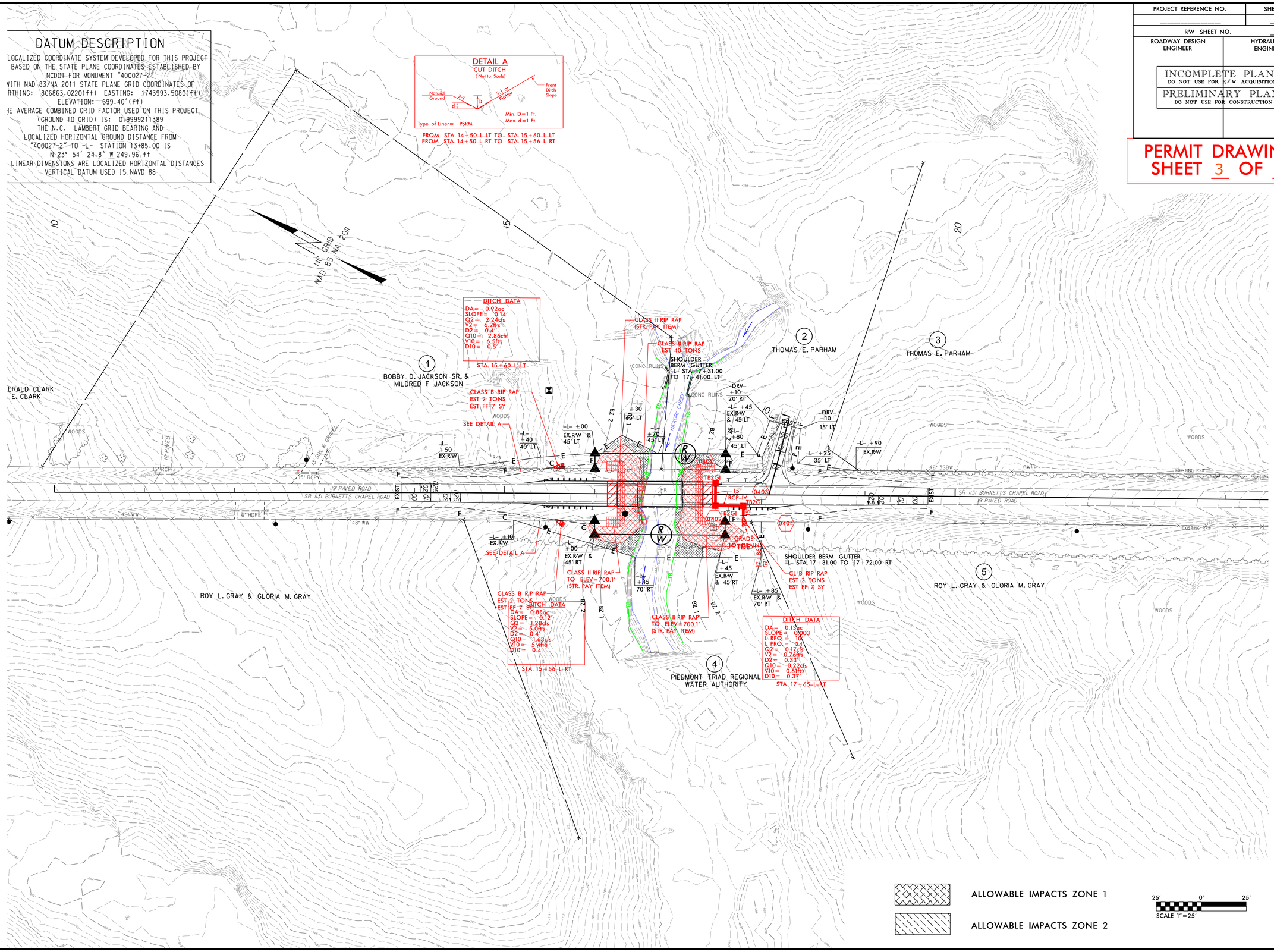

REVISIONS

8/17/99

9/16/2013
ankeeter
R:\Hydraulics\PERMITS_Environmental\Drawings\400027_Hyd_prm_buf.dgn
$$$$USERNAME$$$$ $$$$SYSTIME$$$$ $$$$DGNFILE$$$$

PROJECT REFERENCE NO.	SHEET NO.
R/W SHEET NO.	
ROADWAY DESIGN ENGINEER	HYDRAULICS ENGINEER

INCOMPLETE PLANS
DO NOT USE FOR R/W ACQUISITION

PRELIMINARY PLANS
DO NOT USE FOR CONSTRUCTION

BUFFER DRAWING
SHEET 4 OF 6

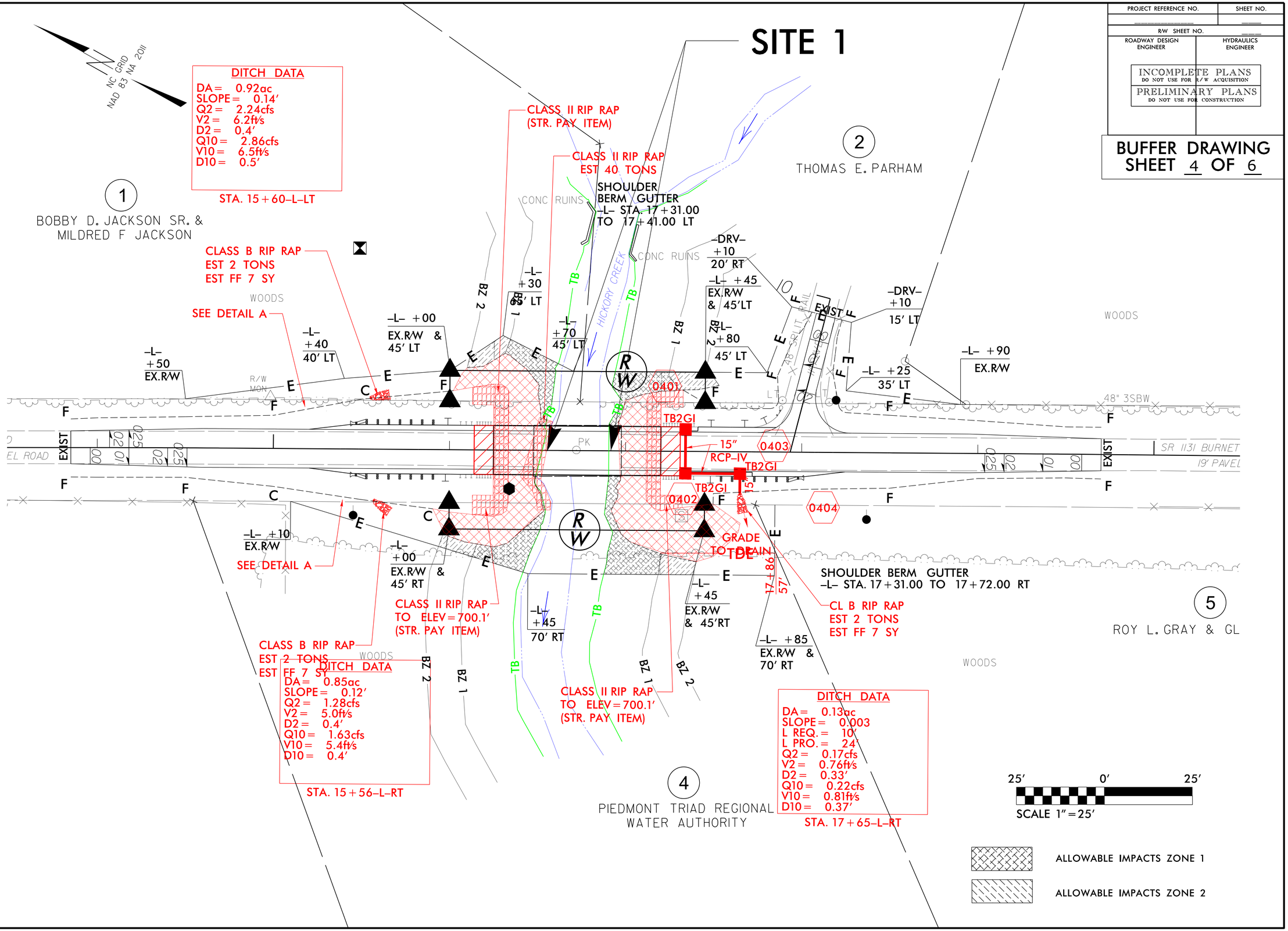

REVISIONS

8/17/99

9/16/2013
amkeeter
R:\Hydraulics\PERMITS_Environmental\Drawings\400027_Hyd_prm_buf_PSH4A.dgn

PROJECT REFERENCE NO.	SHEET NO.
ROADWAY DESIGN ENGINEER	HYDRAULICS ENGINEER

INCOMPLETE PLANS
DO NOT USE FOR R/W ACQUISITION

PRELIMINARY PLANS
DO NOT USE FOR CONSTRUCTION

PERMIT DRAWING
SHEET 5 OF 6

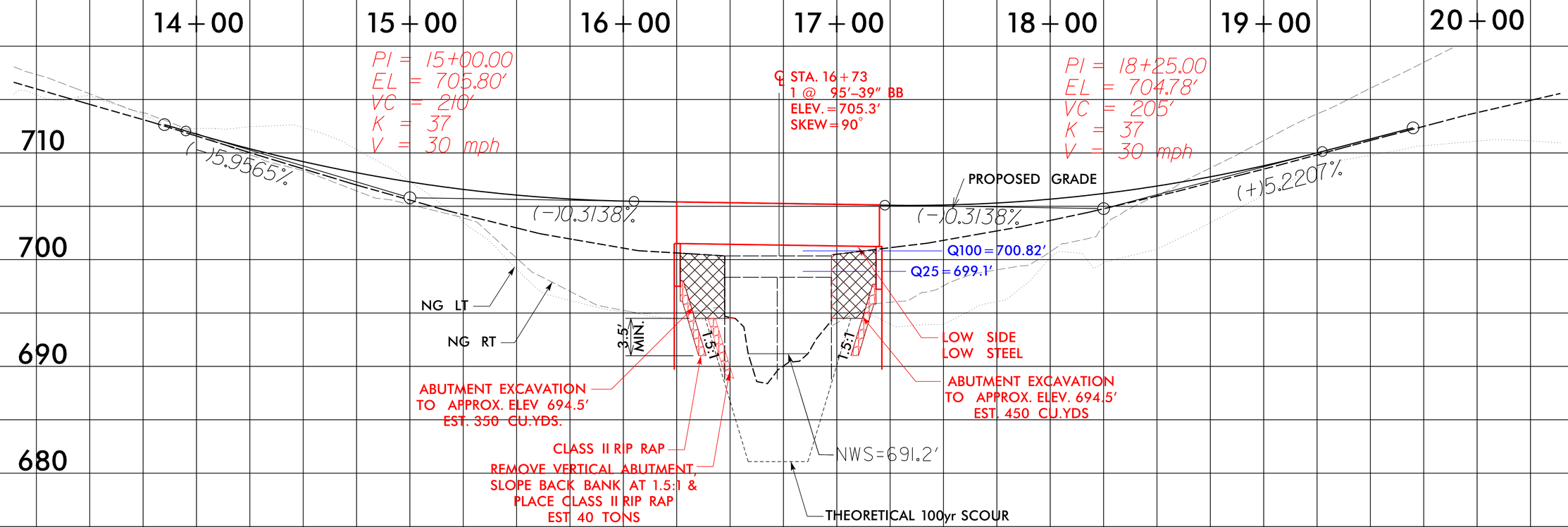

5/14/99

9/16/2013
amkeeter
R:\Hydraulics\PERMITS_Environmental\Drawings\400027_Hyd_prm_buf_PFL.dgn

BUFFER IMPACTS SUMMARY

			IMPACT									BUFFER REPLACEMENT	
			TYPE			ALLOWABLE			MITIGABLE				
SITE NO.	STRUCTURE SIZE / TYPE	STATION (FROM/TO)	ROAD CROSSING	BRIDGE	PARALLEL IMPACT	ZONE 1 (ft^2)	ZONE 2 (ft^2)	TOTAL (ft^2)	ZONE 1 (ft^2)	ZONE 2 (ft^2)	TOTAL (ft^2)	ZONE 1 (ft^2)	ZONE 2 (ft^2)
1	1 @ 95' Box Beam		X			163.0	690.0	853.0					
				X		2069.0	84.0	2153.0					
TOTAL:						2232.0	774.0	3006.0	0.0	0.0	0.0		

N.C. DEPT. OF TRANSPORTATION
DIVISION OF HIGHWAYS

GUILFORD COUNTY
PROJECT: 41665.3B (FA-400027)

9/16/2013
SHEET 6 OF 6

Rev. May 2006

STATE PROJECT: 41665.3B

CONTRACT: _____

See Sheet 1-A For Index of Sheets
See Sheet 1-B for Conventional Symbols

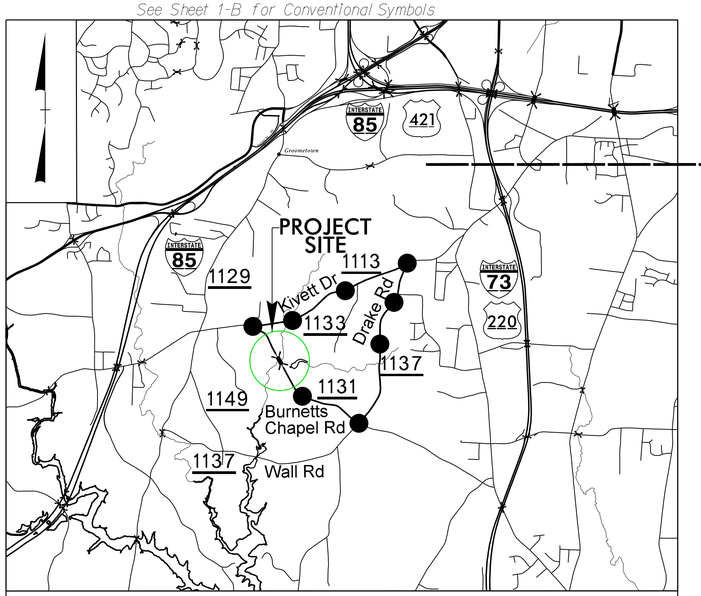

VICINITY MAP

DETOUR ROUTE

STATE OF NORTH CAROLINA
DIVISION OF HIGHWAYS

GUILFORD COUNTY

STATE	STATE PROJECT REFERENCE NO.	SHEET NO.	TOTAL SHEETS
N.C.	41665.3B	1	

STATE PROJ. NO.	F. A. PROJ. NO.	DESCRIPTION
41665.3B		PE

INCOMPLETE PLANS
DO NOT USE FOR R/W ACQUISITION

PRELIMINARY PLANS
DO NOT USE FOR CONSTRUCTION

PERMIT DRAWING
SHEET 1 OF 6

LOCATION: BRIDGE NO. 400027 OVER HICKORY CREEK
ON SR 1131 (BURNETTS CHAPEL ROAD)

TYPE OF WORK: GRADING, DRAINAGE, PAVING, AND STRUCTURE

SURFACE WATER IMPACTS PERMIT

4

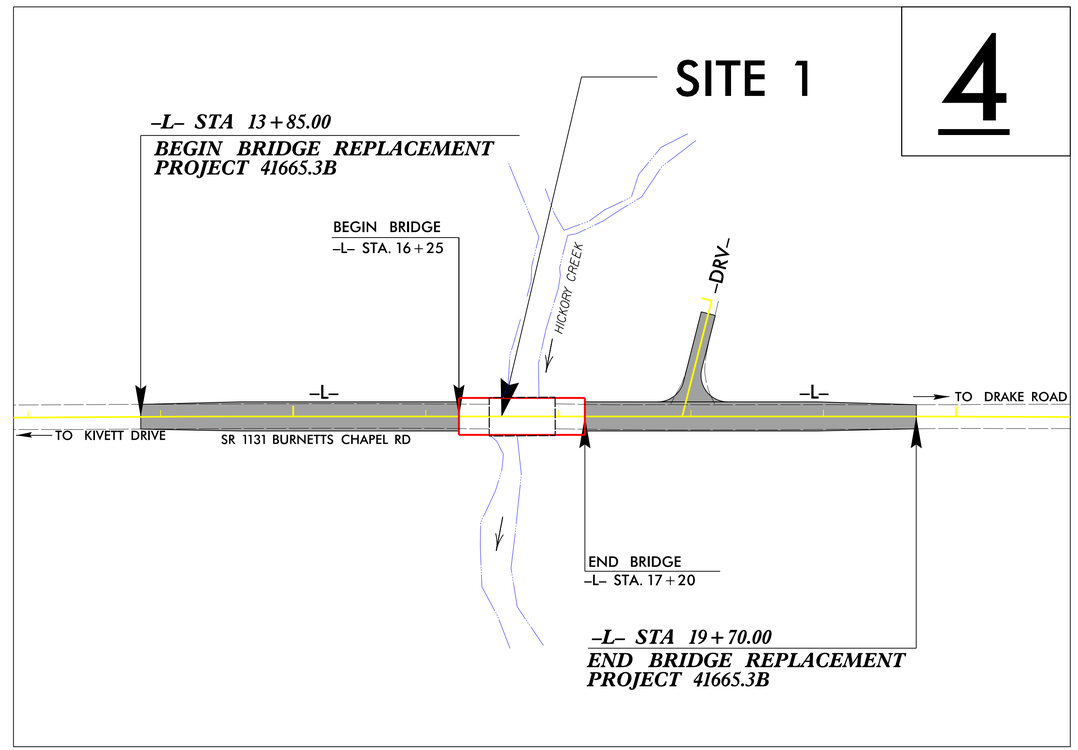

NAD 83/ NSRS 2007

NOTE:
1. THIS PROJECT IS NOT WITHIN ANY MUNICIPAL BOUNDARIES.
2. CLEARING ON THIS PROJECT SHALL BE PERFORMED TO THE LIMITS ESTABLISHED BY METHOD II.

GRAPHIC SCALES

50 25 0 50 100
PLANS

50 25 0 50 100
PROFILE (HORIZONTAL)

10 5 0 10 20
PROFILE (VERTICAL)

DESIGN DATA

ADT 2011 = 1300
ADT 2014 = 1300
DHV = __ %
D = __ %
T = __ % *
V = 50 MPH
* TTST = 7% DUAL __
FUNC CLASS =
RURAL LOCAL
SUB-REGIONAL TIER

PROJECT LENGTH

LENGTH OF ROADWAY PROJECT 17BP.13.R.82	=	0.093 MILES
LENGTH OF STRUCTURE PROJECT 17BP.13.R.82	=	0.018 MILES
TOTAL LENGTH OF PROJECT 17BP.13.R.82	=	0.111 MILES

Prepared In the Office of:
KCI Associates of N.C., P.A.
4601 Six Forks Road
Landmark Center II, Suite 220
Raleigh, NC 27609
Phone (919) 783-9214
Fax (919) 783-9266
http://www.kci.com

2012 STANDARD SPECIFICATIONS

RIGHT OF WAY DATE:
SEPTEMBER 2013

LETTING DATE:
FEBRUARY 2014

NCDOT CONTACT: TIM POWERS, PE

Plans Prepared For:
DIVISION OF HIGHWAYS
1000 Birch Ridge Dr.
Raleigh NC, 27610

CHARLES L. FLOWE, P.E.
PROJECT ENGINEER

BARRY C. SMITH, P.E.
PROJECT DESIGN ENGINEER

HYDRAULICS ENGINEER

SIGNATURE: P.E.

ROADWAY DESIGN ENGINEER

SIGNATURE: P.E.

STATE OF NORTH CAROLINA DEPARTMENT OF TRANSPORTATION

09/08/99
9/16/2013
amkeeter
R:\Hydraulics\PERMITS_Environmental\Drawings\400027_Hyd_prm_wet_TSH.dgn
$$$$SYSTIME$$$$
$$$$DGN$$$$
$$$$USERNAME$$$$

PROJECT REFERENCE NO.	SHEET NO.
R/W SHEET NO.	
ROADWAY DESIGN ENGINEER	HYDRAULICS ENGINEER

INCOMPLETE PLANS
DO NOT USE FOR R/W ACQUISITION

PRELIMINARY PLANS
DO NOT USE FOR CONSTRUCTION

PERMIT DRAWING
SHEET 2 OF 6

DATUM DESCRIPTION

LOCALIZED COORDINATE SYSTEM DEVELOPED FOR THIS PROJECT
BASED ON THE STATE PLANE COORDINATES ESTABLISHED BY
NCDOT FOR MONUMENT "400027-2"
WITH NAD 83/NA 2011 STATE PLANE GRID COORDINATES OF
NORTHING: 806863.0220(ft) EASTING: 1743993.5080(ft)
ELEVATION: 699.40'(ft)
THE AVERAGE COMBINED GRID FACTOR USED ON THIS PROJECT
(GROUND TO GRID) IS: 0.9999211389
THE N.C. LAMBERT GRID BEARING AND
LOCALIZED HORIZONTAL GROUND DISTANCE FROM
"400027-2" TO -L- STATION 13+85.00 IS
N 23° 54' 24.8" W 249.96 ft
LINEAR DIMENSIONS ARE LOCALIZED HORIZONTAL DISTANCES
VERTICAL DATUM USED IS NAVD 88

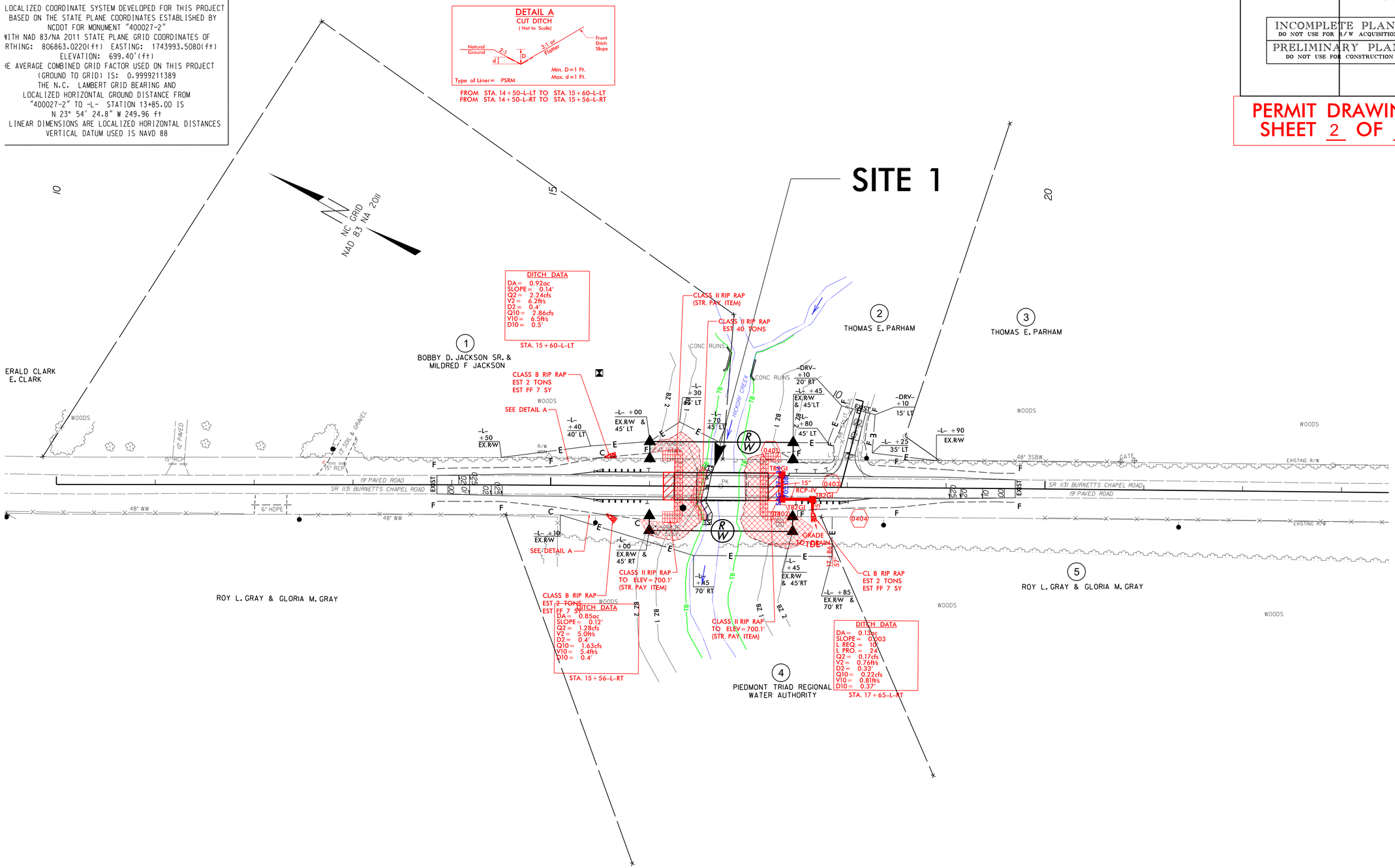

REVISIONS

8/17/99

9/16/2013
amkeeter
R:\Hydraulics\PERMITS_Environmental\Drawings\400027_Hyd_prm_wet.dgn
$$$$USERNAME$$$$ $$$$SYSTIME$$$$ $$$$DGN$$$$ $$$$$$$$$$$$$$$$

PROJECT REFERENCE NO.	SHEET NO.
R/W SHEET NO.	
ROADWAY DESIGN ENGINEER	HYDRAULICS ENGINEER

INCOMPLETE PLANS
DO NOT USE FOR R/W ACQUISITION

PRELIMINARY PLANS
DO NOT USE FOR CONSTRUCTION

PERMIT DRAWING
SHEET 3 OF 6

DATUM DESCRIPTION

LOCALIZED COORDINATE SYSTEM DEVELOPED FOR THIS PROJECT
BASED ON THE STATE PLANE COORDINATES ESTABLISHED BY
NCDOT FOR MONUMENT "400027-2"
WITH NAD 83/NA 2011 STATE PLANE GRID COORDINATES OF
NORTHING: 806863.0220(ft) EASTING: 1743993.5080(ft)
ELEVATION: 699.40'(ft)
THE AVERAGE COMBINED GRID FACTOR USED ON THIS PROJECT
(GROUND TO GRID) IS: 0.9999211389
THE N.C. LAMBERT GRID BEARING AND
LOCALIZED HORIZONTAL GROUND DISTANCE FROM
"400027-2" TO -L- STATION 13+85.00 IS
N 23° 54' 24.8" W 249.96 ft
LINEAR DIMENSIONS ARE LOCALIZED HORIZONTAL DISTANCES
VERTICAL DATUM USED IS NAVD 88

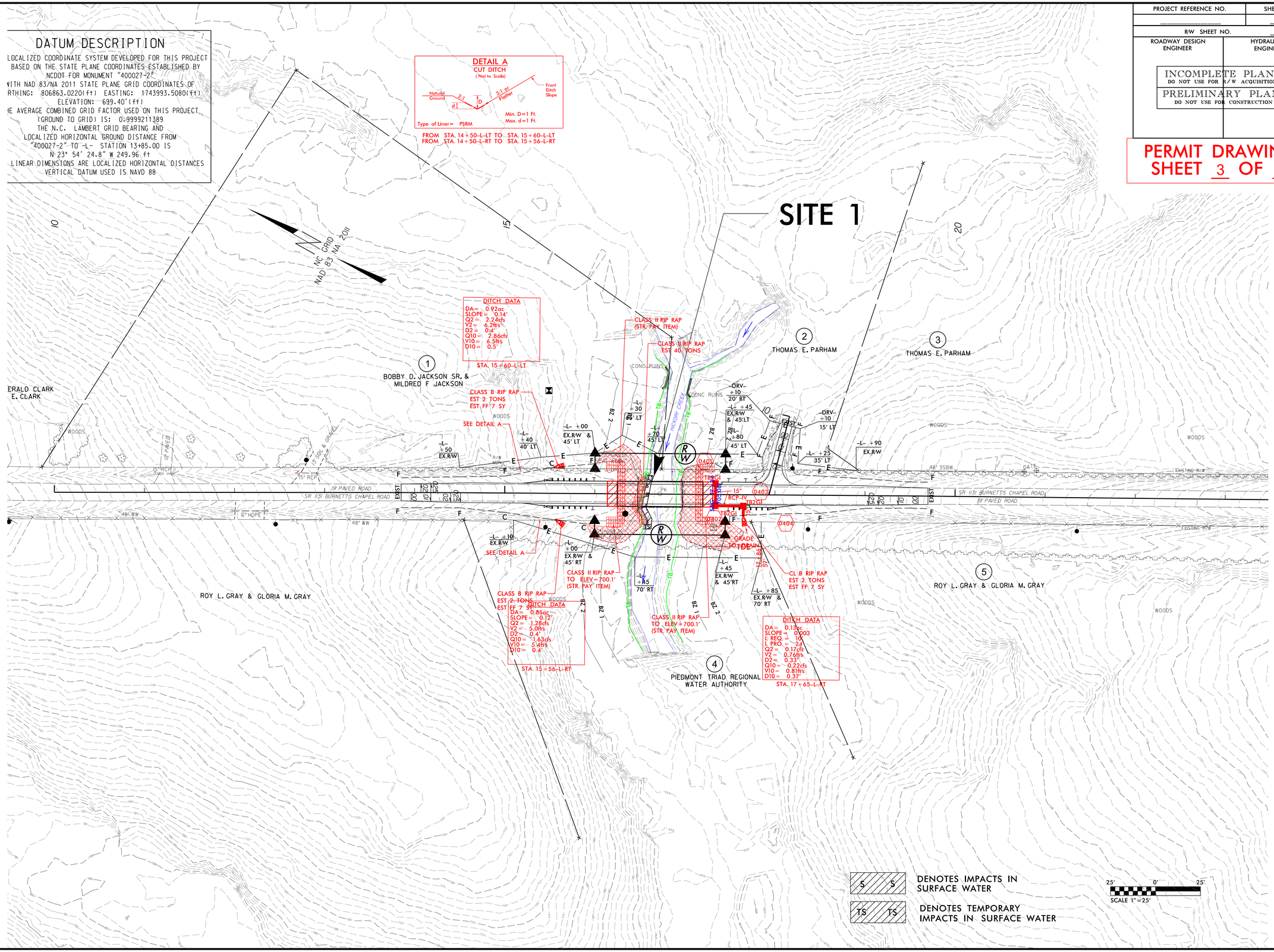

REVISIONS

8/17/99

9/16/2013
amkeeter
R:\Hydraulics\PERMITS_Environmental\Drawings\400027_Hyd_prm_wet.dgn
$$$$USERNAME$$$$ $$$$SYSTIME$$$$ $$$$DGN$$$$

SITE 1

PROJECT REFERENCE NO.	SHEET NO.
R/W SHEET NO.	
ROADWAY DESIGN ENGINEER	HYDRAULICS ENGINEER

INCOMPLETE PLANS
DO NOT USE FOR R/W ACQUISITION

PRELIMINARY PLANS
DO NOT USE FOR CONSTRUCTION

PERMIT DRAWING
SHEET 4 OF 6

NC GRID NAD 83 NA 2011

DITCH DATA
DA = 0.92ac
SLOPE = 0.14'
Q2 = 2.24cfs
V2 = 6.2ft/s
D2 = 0.4'
Q10 = 2.86cfs
V10 = 6.5ft/s
D10 = 0.5'

STA. 15+60-L-LT

1
BOBBY D. JACKSON SR. &
MILDRED F JACKSON

2
THOMAS E. PARHAM

CLASS II RIP RAP
(STR. PAY ITEM)

CLASS II RIP RAP
EST 40 TONS

SHOULDER
BERM GUTTER
-L- STA. 17+31.00
TO 17+41.00 LT

CONC RUINS

CLASS B RIP RAP
EST 2 TONS
EST FF 7 SY

SEE DETAIL A

WOODS

HICKORY CREEK

-L- +50
EX.R/W

-L- +40
40' LT

-L- +00
EX.R/W &
45' LT

-L- +30
65' LT

-L- +70
45' LT

-DRV- +10
20' RT

-L- +45
EX.R/W
& 45'LT

-L- +80
45' LT

-DRV- +10
15' LT

-L- +25
35' LT

-L- +90
EX.R/W

R/W MON

48" 3SBW

TYPE-III
TB2GI

15"
RCP-IV

0401
0402
0403
0404

SR 1131 BURNETTS C
19' PAVED RO

-L- +10
EX.R/W

-L- +00
EX.R/W &
45' RT

CLASS II RIP RAP
TO ELEV=700.1'
(STR. PAY ITEM)

-L- +45
70' RT

GRADE
TO DRAIN

SHOULDER BERM GUTTER
-L- STA. 17+31.00 TO 17+72.00 RT

-L- +45
EX.R/W
& 45'RT

CL B RIP RAP
EST 2 TONS
EST FF 7 SY

-L- +85
EX.R/W &
70' RT

5
ROY L. GRAY & GLORI

CLASS B RIP RAP
EST 2 TONS
EST FF 7 SY

DITCH DATA
DA = 0.85ac
SLOPE = 0.12'
Q2 = 1.28cfs
V2 = 5.0ft/s
D2 = 0.4'
Q10 = 1.63cfs
V10 = 5.4ft/s
D10 = 0.4'

STA. 15+56-L-RT

CLASS II RIP RAP
TO ELEV=700.1'
(STR. PAY ITEM)

4
PIEDMONT TRIAD REGIONAL
WATER AUTHORITY

DITCH DATA
DA = 0.13ac
SLOPE = 0.003
L REQ. = 10'
L PRO. = 24'
Q2 = 0.17cfs
V2 = 0.76ft/s
D2 = 0.33'
Q10 = 0.22cfs
V10 = 0.81ft/s
D10 = 0.37'

STA. 17+65-L-RT

25' 0' 25'
SCALE 1"=25'

S S DENOTES IMPACTS IN SURFACE WATER

TS TS DENOTES TEMPORARY IMPACTS IN SURFACE WATER

REVISIONS

8/17/99

9/16/2013
amkeeter
R:\Hydraulics\PERMITS_Environmental\Drawings\400027_Hyd_prm_wet_PSH4A.dgn

PROJECT REFERENCE NO.	SHEET NO.
ROADWAY DESIGN ENGINEER	HYDRAULICS ENGINEER

INCOMPLETE PLANS
DO NOT USE FOR R/W ACQUISITION

PRELIMINARY PLANS
DO NOT USE FOR CONSTRUCTION

PERMIT DRAWING
SHEET 5 OF 6

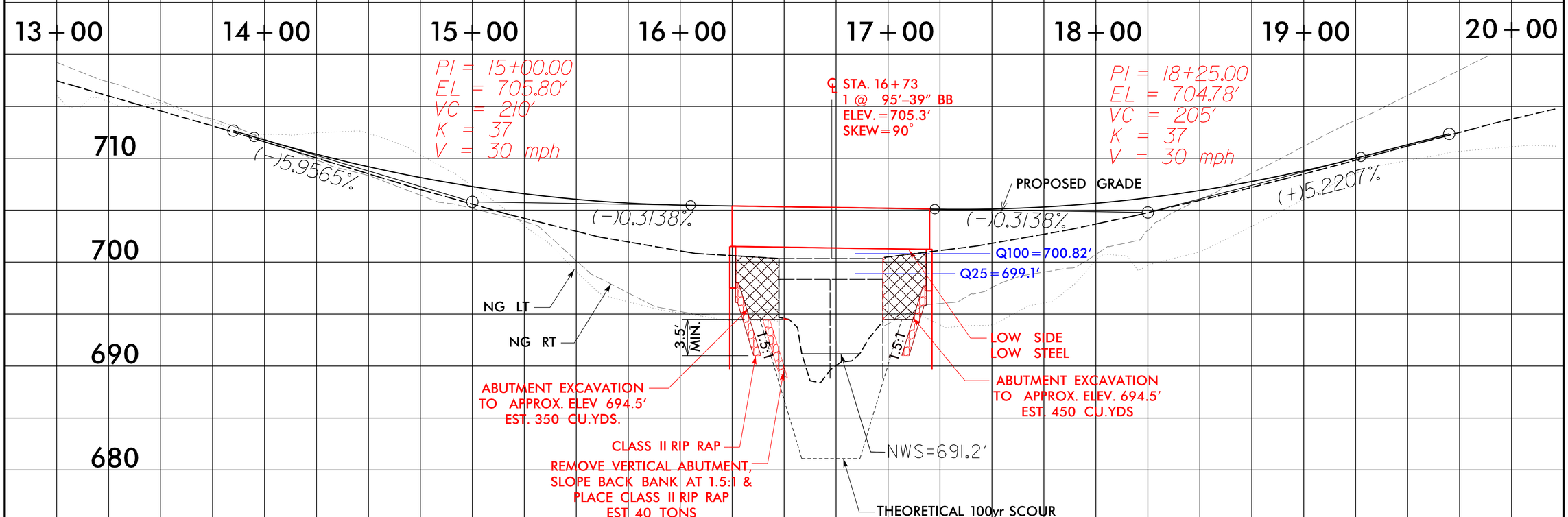

5/14/99
9/16/2013
amkeeter
R:\Hydraulics\PERMITS_Environmental\Drawings\400027_Hyd_prm_wet_PFL.dgn
$$$$SYTIME$$$$
$$$$DGN$$$$
$$$$USERNAME$$$$

WETLAND PERMIT IMPACT SUMMARY

			WETLAND IMPACTS					SURFACE WATER IMPACTS				
Site No.	Station (From/To)	Structure Size / Type	Permanent Fill In Wetlands (ac)	Temp. Fill In Wetlands (ac)	Excavation in Wetlands (ac)	Mechanized Clearing in Wetlands (ac)	Hand Clearing in Wetlands (ac)	Permanent SW impacts (ac)	Temp. SW impacts (ac)	Existing Channel Impacts Permanent (ft)	Existing Channel Impacts Temp. (ft)	Natural Stream Design (ft)
1	16+55-L-	Bank Stabliziation						0.01	<0.01	52	10	
TOTALS:								0.01	<0.01	52	10	

NC DEPARTMENT OF TRANSPORTATION
DIVISION OF HIGHWAYS

GUILFORD COUNTY
WBS - 41665.3B (FA-400027)

ATN Revised 3/31/05

SHEET 6 OF 6 #########