FOUR-BAY SALT STORAGE SHED

GENERAL NOTES

I: FOR THIS PROJECT:

A) A **PROJECT EXPEDITOR** WILL BE DESIGNATED BY THE OWNER TO PROVIDE GENERAL ADMINISTRATION OF THESE DOCUMENTS FOR THE OWNER. PROJECT EXPEDITOR SHALL BE THE OWNER UNLESS OTHERWISE DESIGNATED BY WRITTEN AGREEMENT WITH ANOTHER PARTY.

B) THESE DOCUMENTS ARE SCHEMATIC IN NATURE AND ARE INTENDED TO CONVEY THE DESIGN INTENT OF THE ENGINEER. IT IS THE CONTRACTOR'S RESPONSIBILITY TO VERIFY DIMENSIONS, FIELD CONDITIONS, ETC. AS REQUIRED FOR THE PROPER IMPLEMENTATION OF THESE DRAWINGS. DO NOT SCALE THE DRAWINGS.

C) THE ENGINEER'S SCOPE OF WORK DOES NOT INCLUDE CONSTRUCTION OBSERVATION UNLESS OTHERWISE DESIGNATED IN WRITING BY THE OWNER.

THE CONTRACTOR IS IN CHARGE OF THE WORK AND COMPLIANCE WITH THESE DOCUMENTS IS THE SOLE RESPONSIBILITY OF THE CONTRACTOR. THE ENGINEER WILL BEAR NO RESPONSIBILITY FOR FAILURE OF THE CONTRACTOR TO FULLY COMPLY WITH ALL INCLUSIVE DOCUMENTS.

USE OF THESE DOCUMENTS WILL CONSTITUTE AGREEMENT BY THE CONTRACTOR TO THESE CONDITIONS.

D) "THE GENERAL CONDITIONS OF THE CONTRACT FOR THE CONSTRUCTION OF THE BUILDINGS" OF THE AMERICAN INSTITUTE OF ARCHITECTS DOCUMENT A-201, LATEST EDITION, ARE HEREBY MADE PART OF THE DOCUMENTS. IN THE EVENT OF A CONFLICT, THESE GENERAL NOTES AND CONTRACT SUPERSEDE "AIA DOCUMENT A-201".

II: ALL WORK UNDER THIS CONTRACT SHALL:

A) CONFORM TO STATE, LOCAL AND NATIONAL CODES AND ORDINANCES AS ARE APPLICABLE TO THE WORK INCLUDING BUT NOT LIMITED TO THE NORTH CAROLINA STATE BUILDING CODE, THE AMERICANS WITH DISABILITIES ACT (ADA), NATIONAL ELECTRIC CODES, ASTM SPECIFICATIONS, AND OSHA SAFETY REGULATIONS.

B) COMPLY WITH ALL LAWS, ORDINANCES, CODES, RULES AND REGULATIONS PERTAINING TO ENVIRONMENTAL PROTECTION (EPA). THE COST OF ALL REQUIRED INSPECTIONS AND PERMITS SHALL BE THE RESPONSIBILITY OF THE CONTRACTOR.

III: UNLESS OTHERWISE DIRECTED BY THE ENGINEER, THE CONTRACTOR SHALL:

A) SUPPLY AND PAY FOR ALL LABOR, TRANSPORTATION, MATERIALS, TOOLS, APPARATUS, LIGHTS, POWER, HEAT, SANITARY FACILITIES, WATER, SCAFFOLDING, AND INCIDENTALS NECESSARY FOR THE COMPLETION OF HIS WORK.

B) INSTALL, MAINTAIN AND REMOVE ALL EQUIPMENT, OTHER UTENSILS OR THINGS USED FOR THE CONSTRUCTION PRIOR TO TURNING OVER THE PROJECT., IF SUCH ITEMS ARE LEFT AFTER COMPLETION OF THE PROJECT, THEY SHALL BECOME PROPERTY OF THE OWNER. THE OWNER MAY PROMPTLY DISPOSE OF SUCH ITEMS, AND WILL NOT BE SUBJECT TO CLAIMS OF THE CONTRACTOR RESULTING FROM SUCH DISPOSITION.

C) CONSTRUCT IN THE BEST AND PROFESSIONAL MANNER, A COMPLETE JOB AND EVERYTHING INCIDENTAL THERETO, AS SHOWN OR REASONABLY IMPLIED FROM THE PLANS, ALL WORK SHALL BE COMPLETED IN ACCORDANCE WITH THE DOCUMENTS.

D) VERIFY ALL DIMENSIONS AND CONDITIONS PRIOR TO PROCEEDING WITH THE WORK AND NOTIFY THE ENGINEER IN WRITING OF ANY DISCREPANCIES DISCOVERED OR LACK OF REQUIRED INFORMATION TO REQUEST CLARIFICATION. IF THE CONTRACTOR OBSERVES THE DOCUMENTS TO BE CONTRARY TO GOVERNING LAWS, ORDINANCES, CODES, RULES AND REGULATIONS OR OTHERWISE QUESTIONABLE CONDITIONS, HE SHALL PROMPTLY NOTIFY THE ENGINEER IN WRITING FOR INSTRUCTIONS PRIOR TO PROCEEDING WITH THE WORK.

E) KEEP THE BUILDING AND SURROUNDING AREA REASONABLY FREE FROM RUBBISH AT ALL TIMES. AT A MINIMUM, DEBRIS SHALL BE REMOVED FROM THE SITE ON A WEEKLY BASIS OR AS DIRECTED BY PROJECT EXPEDITOR.

F) LOCATE ALL EXISTING UTILITIES. THE CONTRACTOR MAY NOT INTERFERE WITH ADJACENT UTILITIES UNLESS PRIOR NOTICE AND PERMISSION IS RECEIVED FROM THOSE WHO MAY AS A RESULT OF THIS INTERFERENCE BE AFFECTED.

G) PRIOR TO ANY WORK, CALL "NC ONE CALL CENTER" @ 800-632-4949 AND OTHER LOCATING SERVICES AS TO CONFIRM LOCATION OF UTILITIES.

H) PRIOR TO FINAL INSPECTION AND ACCEPTANCE OF THE BUILDING, EACH CONTRACTOR SHALL CLEAN HIS PORTION OF THE WORK, INCLUDING GLASS, HARDWARE FIXTURES, MASONRY, TILE AND MARBLE (USING NO ACID), CLEAN AND WAX ALL FLOORS AS SPECIFIED, AND COMPLETELY PREPARE THE BUILDING FOR USE BY THE OWNER.

I) FILE WITH THE OWNER CURRENT INSURANCE CERTIFICATIONS IN THE AMOUNTS REQUESTED BY THE OWNER FOR BUILDER'S RISK, WORKMEN'S COMPENSATION, COMPREHENSIVE GENERAL LIABILITY, BODILY INJURY AND PROPERTY DAMAGE. THIS INSURANCE SHALL INDEMNIFY THE OWNER AND THE ENGINEER OF ANY AND ALL COSTS, CLAIMS, SUITS AND JUDGEMENTS FOR PROPERTY DAMAGE AND PERSONAL INJURY (INCLUDING GENERAL) ARISING OUT OF THE CONTRACTOR'S ACTIONS.

J) PROVIDE ALL NECESSARY SAFETY MEASURES FOR THE PROTECTION OF ALL PERSONS OF THE WORK, INCLUDING THE REQUIREMENTS OF THE A.G.C. ACCIDENT PREVENTION MANUAL IN CONSTRUCTION AS AMENDED, AND SHALL FULLY COMPLY WITH ALL STATE LAWS OR REGULATIONS AND NORTH CAROLINA STATE BUILDING CODE REQUIREMENTS TO PREVENT ACCIDENT OR INJURY TO PERSONS ON OR ABOUT THE LOCATION OF THE WORK.

K) CLEARLY MARK OR POST SIGNS WARNING OF HAZARDS EXISTING, AND BARRICADE EXCAVATIONS, ELEVATOR SHAFTS, STAIRWELLS AND SIMILAR HAZARDS. PROTECT AGAINST DAMAGE OR INJURY RESULTING FROM FALLING MATERIALS AND MAINTAIN ALL PROTECTIVE DEVICES AND SIGNS THROUGHOUT THE PROGRESS OF THE WORK

SITE LAYOUT

NO WATERCOURSE OR 100 YEAR FLOODPLAIN AS MAPPED BY FEMA, OR AS DEFINED BY ANY FEDERAL, STATE, OR LOCAL AUTHORITY IS LOCATED ON THIS PROPERTY.

HIGHWAY DIVISION 7, NCDOT
ROCKINGHAM COUNTY, NC
SCO ID# 09-07377-01I

INDEX OF DRAWINGS

T1 COVER SHEET / BUILDING CODE SUMMARY
S1 ELEVATIONS
S2 FOUNDATION & FRAMING PLANS
S3 DETAILS
S4 DETAILS & GENERAL NOTES
E1 ELECTRICAL POWER & LIGHTING PLAN

BUILDING ENERGY CODE SUMMARY
FOR ALL COMMERCIAL PROJECTS

ENERGY REQUIREMENTS:
The following data shall be considered minimum and any special attribute required to meet the energy code shall also be provided. Each Designer shall furnish the requiredportions of the project information for the plan data sheet. If energy cost budget method, state the annual energy cost budget vs. allowable annual energy cost budget.

NOT APPLICABLE: OPEN AIR LOW ENERGY BUILDING

THERMAL ENVELOPE

Method of Compliance:
☐ Prescriptive ☐ Performanceenergy ☐ C

Roof/Ceiling Assembly (each assembly)
Description of assembly
U-Value of total assembly
R-Value of insulation
Skylights in each assem...
U-Value of skyli...
Total squar...

Exterior ... ---
... with glazing) ---
...ficient ---
...n factor ---
... e required, if applicable ---
...-Values ---

Walls adjacent to unconditioned space (each assembly)
Description of assembly ---

U-Value of total assembly ---
R-Value of insulation ---
Openings (windows or doors with glazing) ---
U-Value of assembly ---
low e required, if applicable ---
Door R-Values ---

Walls below grade (each assembly)
Description of assembly ---

U-Value of total assembly ---
R-Value of insulation ---

Floors over unconditioned space (each assembly)
Description of assembly ---

U-Value of total assembly ---
R-Value of insulation ---

Floor slabs on grade (each assembly)
Description of assembly ---

U-Value of total assembly ---
R-Value of insulation ---
Horizontal/Vertical requirement ---
Slab heated ---

2012 APPENDIX B
BUILDING CODE SUMMARY

Name of Project: FOUR BAY SALT STORAGE BUILDING, WENTWORTH, NC
Address: COUNTY MAINTENANCE YARD, 191 NC 65, REIDSVILLE, NC 27320
Proposed Use: STORAGE
Owner or Authorized Agent: HIGHWAY DIVISION 7 Phone # 336-334-3192
Owned By: STATE OF NORTH CAROLINA ☐ City/County ☐ Private ☒ State
Code Enforcement Jurisdiction: ☐ City ☐ County

LEAD DESIGN PROFESSIONAL:

DESIGNER	FIRM	NAME	LICENSE #	TELEPHONE #	E-MAIL
Architectural	FACILITIES DESIGN, NCDOT				
SITE "Civil"					
Electrical	NCDOT	PRISCILLA WILLIAMS	22040	(919) 707-4552	ptwilliams1@ncdot.gov
Plumbing					
Mechanical					
Sprinkler–Standpipe					
Structural	NCDOT	MIKE MOUNTCASTLE	17326	(919) 707-4547	mdmountcastle@ncdot.gov

2012 EDITION OF NC CODE FOR: ☒ New Construction ☐ Addition ☐ Upfit
EXISTING: ☐ Reconstruction ☐ Alteration ☐ Repair
CONSTRUCTED ______ ORIGINAL USE ______ RENOVATED ______ CURRENT USE ______

BUILDING DATA
Construction Type: ☐ I–A ☐ II–A ☐ III–A ☐ IV ☐ V–A ☐ I–B ☐ II–B ☐ III–B ☒ V–B
Mixed construction: ☒ No ☐ Yes Types______
Sprinklers: ☒ No ☐ Partial ☐ Yes ☐ NFPA 13 ☐ NFPA 13R ☐ NFPA 13D
Standpipes: ☒ No ☐ Yes Class ☐ I ☐ II ☐ III ☐ Wet ☐ Dry
Fire District: ☒ No ☐ Yes Flood Hazard Area: ☒ No ☐ Yes
Building Height: Feet 25'-0" Number of Stories 1
Mezzanine: ☒ No ☐ Yes
Gross Building Area:

FLOOR	EXISTING (SQ FT)	NEW (SQ FT)	SUB-TOTAL
1st Floor		3320	3320
TOTAL		3320	3320

ALLOWABLE AREA
Primary Occupancy: ☐ Assembly ☐ A–1 ☐ A–2 ☐ A–3 ☐ A–4 ☐ A–5
☐ Business ☐ Educational Factory ☐ F–1 Moderate ☐ F–2 Low
Hazardous ☐ H–1 Detonate ☐ H–2 Deflagrate ☐ H–3 Combust ☐ H–4 Health ☐ H–5 HPM
Institutional ☐ I–1 ☐ I–2 ☐ I–3 ☐ I–4
I–3 Condition ☐ 1 ☐ 2 ☐ 3 ☐ 4 ☐ 5
☐ Mercantile ☐ Residential ☐ R–1 ☐ R–2 ☐ R–3 ☐ R–4
Storage ☐ S–1 Moderate ☐ S–2 Low ☐ High-piled
☒ Utility and Miscellaneous ☐ Parking Garage ☐ Open ☐ Enclosed ☐ Repair Garage
Secondary Occupancy: N/A
Mixed Occupancy: ☒ No ☐ Yes Separation: ____ Hr. Exception: ____

STORY NO.	DESCRIPTION AND USE	(A) BLDG AREA PER STORY (ACTUAL)	(B) TABLE 503 AREA	(C) AREA FOR OPEN SPACE INCREASE	(D) AREA FOR SPRINKLER INCREASE	(E) ALLOWABLE AREA OR UNLIMITED	(F) MAXIMUM BUILDING AREA
1	Utility & Misc.	3320	5500	NOT USED	NOT USED	5500	5500

ALLOWABLE HEIGHT

TYPE: II–B	ALLOWABLE (TABLE 503)	INCREASE FOR SPRINKLERS	SHOWN ON PLANS	CODE REFERENCE
Building height in feet	Feet 40	Feet=H+20'= N/A	Feet 20'-1"	503
Building Height in Stories	Stories 1	Stories+1= N/A	Stories 1	503

FIRE PROTECTION REQUIREMENTS

BUILDING ELEMENT	FIRE SEPARATION DISTANCE (FEET)	RATING REQ'D	RATING PROVIDED W/ REDUCT	DETAIL & SHEET #	DESIGN # FOR RATED ASSEMBLY	DESIGN # FOR RATED PENETRATION	DESIGN # FOR RATED JOINTS
Structural frame, including columns, girders, & trusses	10	0	0	–	–	–	–
Exterior walls	–	0	0	–	–	–	–
Interior Walls and partitions	–	0	0	–	–	–	–
Roof construction	10	0	0	–	–	–	–

* Indicate section number permitting reduction

LIFE SAFETY SYSTEM REQUIREMENTS
Emergency Lighting: ☒ No ☐ Yes
Exit Signs: ☒ No ☐ Yes
Fire Alarm: ☒ No ☐ Yes
Smoke Detection Systems: ☒ No ☐ Yes
Panic Hardware: ☒ No ☐ Yes

EXIT REQUIREMENTS N/A

STRUCTURAL DESIGN
DESIGN LOADS:
Importance Factors: Wind (I_W) 1.0 Snow (I_S) 1.0 Seismic (I_E) 1.0
Live Loads: Roof 20 psf Mezzanine N/A psf Floor 800 psf
Snow Load: 20 psf
Wind Load: Basic Wind Speed 90 mph (ASCE-7-05)
Exposure Category B
Wind Base Shears (for MWFRS) Vx = ______ Vy = ______

SEISMIC DESIGN:
Compliance with Section 1616.4 only? ☐ YES ☒ NO
SEISMIC DESIGN CATEGORY ☐ A ☒ B ☐ C ☐ D
Provide the following Seismic Design Parameters:
Occupancy Category: ☐ I ☒ II ☐ III ☐ IV
Spectral Response Acceleration S_S 20.7 %g S_1 7.8 %g
Site Classification D ☐ Field Test ☒ Presumptive
Basic structural system (check one)
X Bearing Wall ___ Dual w/Special Moment Frame
___ Building Frame ___ Dual w/Intermediate R/C or Special Steel
___ Moment Frame ___ Inverted Pendulum
Seismic base shear Vx=______ Vy=______
Analysis Procedure X Simplified ___ Equivalent Lateral Force ___ Modal
Architectural, Mechanical, Components anchored? N/A
LATERAL DESIGN CONTROL: Earthquake ______ Wind X
Special Inspection Required? ☐ Yes ☒ No
SOIL BEARING CAPACITIES:
☐ Field Test ☒ Presumptive 1500

PLUMBING, ENERGY, ELECTRICAL, & MECHANICAL SUMMARIES – NOT APPLICABLE

SEAL: NORTH CAROLINA PROFESSIONAL ENGINEER 17326 MICHAEL D. MOUNTCASTLE
6-30-14

FACILITIES DESIGN
ARCHITECTS & ENGINEERS
FACILITY MANAGEMENT DIVISION
1 SOUTH WILMINGTON STREET
919/707-4540 FAX: 919/715-0399
RALEIGH, NORTH CAROLINA 27601

STATE OF NORTH CAROLINA * DEPARTMENT OF TRANSPORTATION

PROJECT: FOUR BAY SALT STORAGE
HIGHWAY DIVISION 7, NCDOT
ROCKINGHAM COUNTY, NC
SCO ID# 09-07377-01I

SCO ID#: 09-07377-01I

REVISIONS NO.	DATE

DATE ISSUED: 03-20-14
DRAWN BY: DDB
CHECKED BY: PTW
SHEET NO. T1
1 OF 1

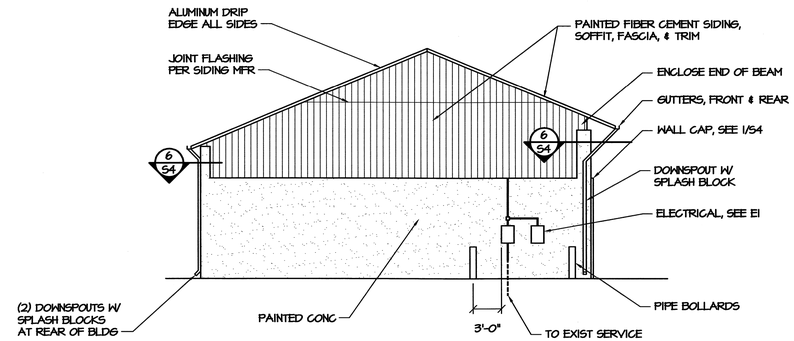

LEFT SIDE ELEVATION
(RIGHT SIDE SIMILAR)

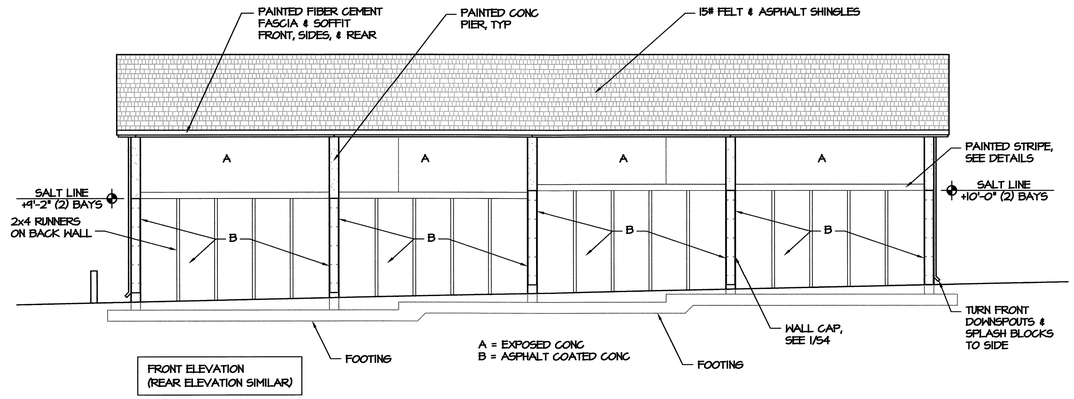

FRONT ELEVATION
(REAR ELEVATION SIMILAR)

1 / S1 ELEVATIONS
SCALE: 1/8" = 1'-0"

SEAL: NORTH CAROLINA PROFESSIONAL ENGINEER MICHAEL D. MOUNTCASTLE

7-28-14

FACILITIES DESIGN
ARCHITECTS & ENGINEERS
FACILITY MANAGEMENT DIVISION
1 SOUTH WILMINGTON STREET
919/707-4540 FAX: 919/715-0399
RALEIGH, NORTH CAROLINA 27601

STATE OF NORTH CAROLINA * DEPARTMENT OF TRANSPORTATION

PROJECT:
FOUR BAY SALT STORAGE
HIGHWAY DIVISION 7, NCDOT
ROCKINGHAM COUNTY, NC
SCO ID# 09-07377-011

SCO ID#: 09-07377-011

REVISIONS NO.	DATE
1	07-28-14

DATE ISSUED: 04-17-14
DRAWN BY: MDM
CHECKED BY: MDM
SHEET NO.
S1
1 OF 4

NOTES:

1. PROVIDE TRUSS SHOP DRAWINGS SEALED BY A PROFESSIONAL ENGINEER LICENSED IN THE STATE OF NC, SHOWING TRUSS LAYOUT, TRUSS DESIGNS, & REQUIRED BRACING.
2. TRUSS MFR NOTE THERE IS NO CEILING & BOTTOM CHORD BRACING MAY BE REQUIRED. GC NOTE BOTTOM CHORD BRACING IS SHOWN ON TRUSS CALCULATION SHEET & IS IN ADDITION TO THE TEMPORARY BRACING.
3. ROOF SHEATHING SHALL BE ½" OSB OR PLYWOOD, ATTACHED W/ 10D NAILS @ 6" O.C. ON PANEL EDGES, & @ 8" O.C. AT INTERIOR.
4. SIDING, VENTED SOFFIT, & FASCIA SHALL BE PAINTED FIBER-CEMENT BOARD, COLOR SELECTION BY OWNER.
5. BM-1 = 5-1/2" X 16" GLULAM, 24F-V4, BALANCED, & PRESSURE TREATED.

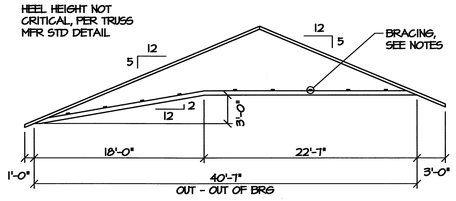

TRUSS PROFILE

NOTES:

1. COMPRESSIVE STRENGTH OF CONCRETE FOR FOOTINGS = 4000 PSI.
2. CONCRETE FOR WALLS SHALL HAVE 0.40 MAXIMUM W/C RATIO, & MINIMUM 5000 PSI COMPRESSIVE STRENGTH.
3. EXPOSED CONCRETE SHALL INCLUDE 5% ENTRAINED AIR.
4. ALL REINF STEEL SHALL BE ASTM A 615, GR 60. LAP ALL SPLICES 48 X BAR DIAMETER.
5. ELEVATIONS SHOWN ARE ABOVE REFERENCE FLOOR ELEVATION = +0'-0" AT NORTH EAST CORNER (SEE ADDENDUM #1).
6. WOOD STUD WALL SHEATHING SHALL BE ½" APA RATED SHEATHING, 32/16 SPAN RATING, EXPOSURE 1, ATTACHED W/ 8D NAILS @ 6" OC ON PANEL EDGES & 8" OC ALONG INTERMEDIATE SUPPORTS, U.O.N. PROVIDE BLOCKING AT ALL PANEL EDGES ON EXTERIOR WALLS.
7. PT DENOTES PRESSURE TREATED IN ACCORDANCE W/ AWPA STANDARDS.
8. COORDINATE LOCATION & INSTALLATION OF ELECTRICAL WORK W/ OWNER.

PREPARE CONCRETE WALL SURFACES AS FOLLOWS:

INTERIOR - PATCH TIE HOLES & DEFECTS, REMOVE FINS FLUSH W/ SURFACE.

EXTERIOR - PATCH TIE HOLES, BUG HOLES, & OTHER DEFECTS. REMOVE FINS FLUSH WITH SURFACE. PATCH HOLES THAT CANNOT BE SEALED W/ BLOCK FILLER & PAINT.

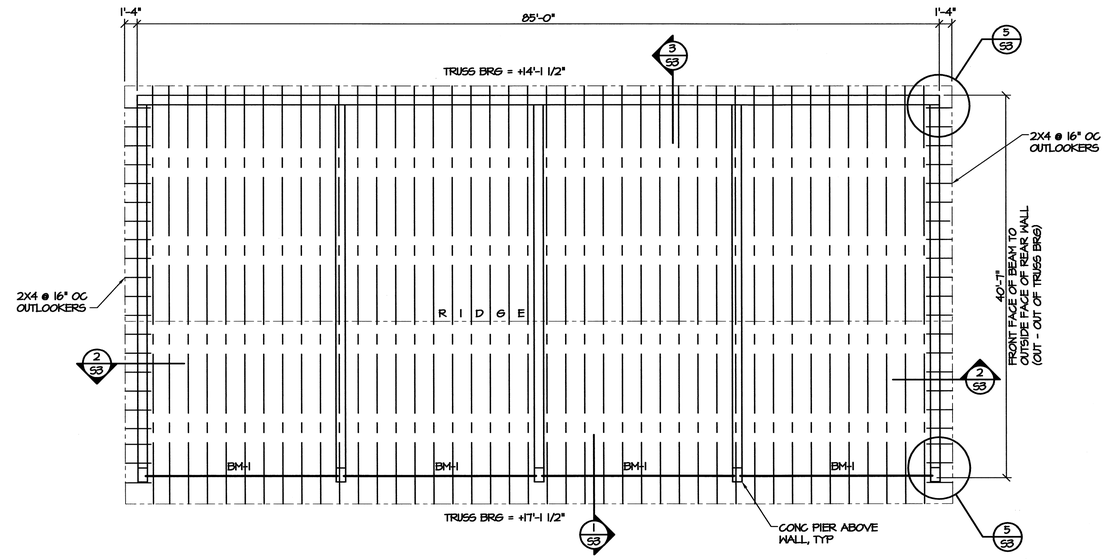

PLAN NORTH

2/S2 FRAMING PLAN

SCALE: 1/8" = 1'-0"

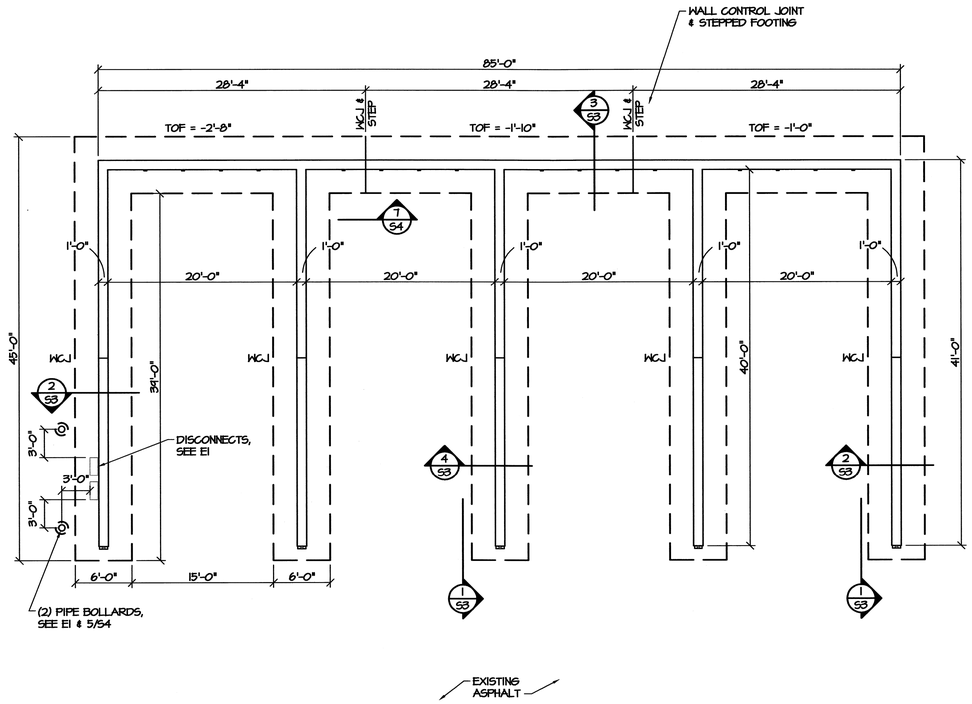

SITE NOTES:

1. NEW BUILDING IS TO BE PLACED ON EXISTING ASPHALT PAD. CUT & REMOVE ASPHALT TO INSTALL FOOTINGS. PATCH W/ NEW ASPHALT OR CONCRETE FLUSH W/ EXISTING.
2. CONTRACTOR IS RESPONSIBLE FOR BUILDING LAYOUT. COORDINATE BUILDING LOCATION W/ NCDOT. AFTER LAYOUT, VERIFY BUILDING LOCATION W/ NCDOT PRIOR TO CONSTRUCTION.
3. NCDOT IS RESPONSIBLE FOR REMOVING ANY STORED MATERIAL FROM BUILDING PAD PRIOR TO CONSTRUCTION.

PLAN NORTH

1/S2 FOUNDATION PLAN

SCALE: 1/8" = 1'-0"

NORTH CAROLINA PROFESSIONAL ENGINEER SEAL 17386 MICHAEL D. MOUNTJOY

7-28-14

FACILITIES DESIGN
ARCHITECTS & ENGINEERS
FACILITY MANAGEMENT DIVISION
1 SOUTH WILMINGTON STREET
919/707-4640 FAX 919/715-0399
RALEIGH, NORTH CAROLINA 27601

NORTH CAROLINA * NOTHING RUNS LIKE IT DOES * DEPARTMENT OF TRANSPORTATION

PROJECT:

FOUR BAY SALT STORAGE
HIGHWAY DIVISION 7, NCDOT
ROCKINGHAM COUNTY, NC
SCO ID# 09-07377-011

SCO ID#: 09-07377-011

REVISIONS

NO.	DATE
1	07-28-14

DATE ISSUED: 04-17-14

DRAWN BY: MDM

CHECKED BY: MDM

SHEET NO.

S2

2 OF 4

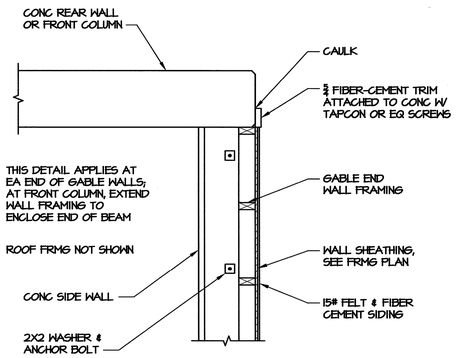

5/S3 GABLE WALL TRIM DETAIL

SCALE: 3/4" = 1'-0"

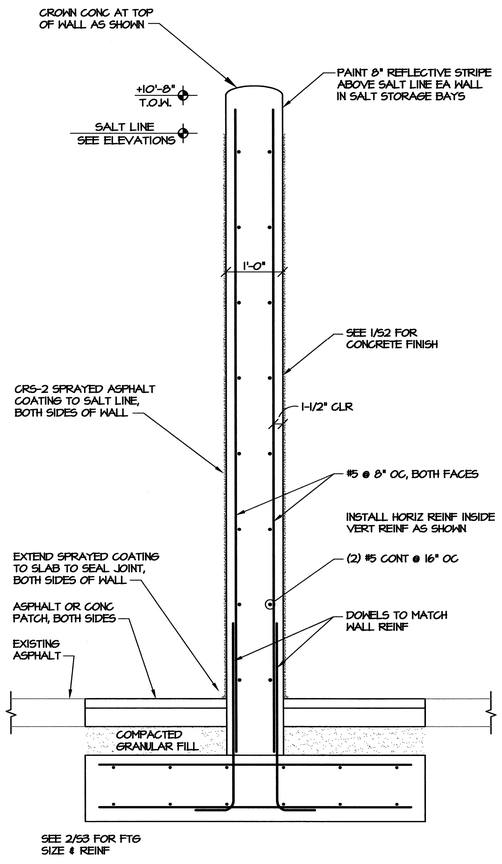

4/S3 SECTION AT INTERIOR WALL

SCALE: 3/4" = 1'-0"

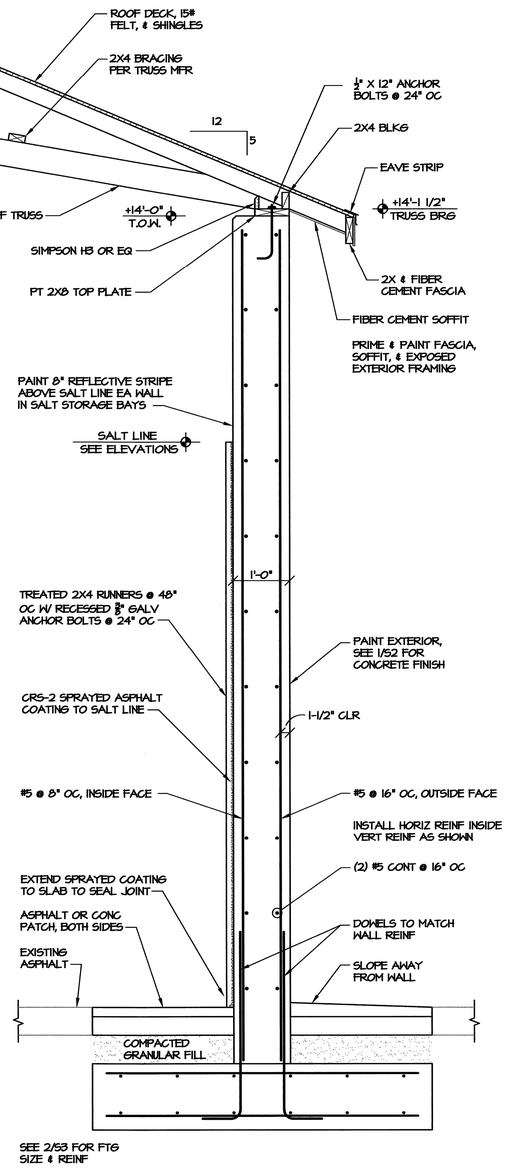

3/S3 SECTION AT REAR WALL

SCALE: 3/4" = 1'-0"

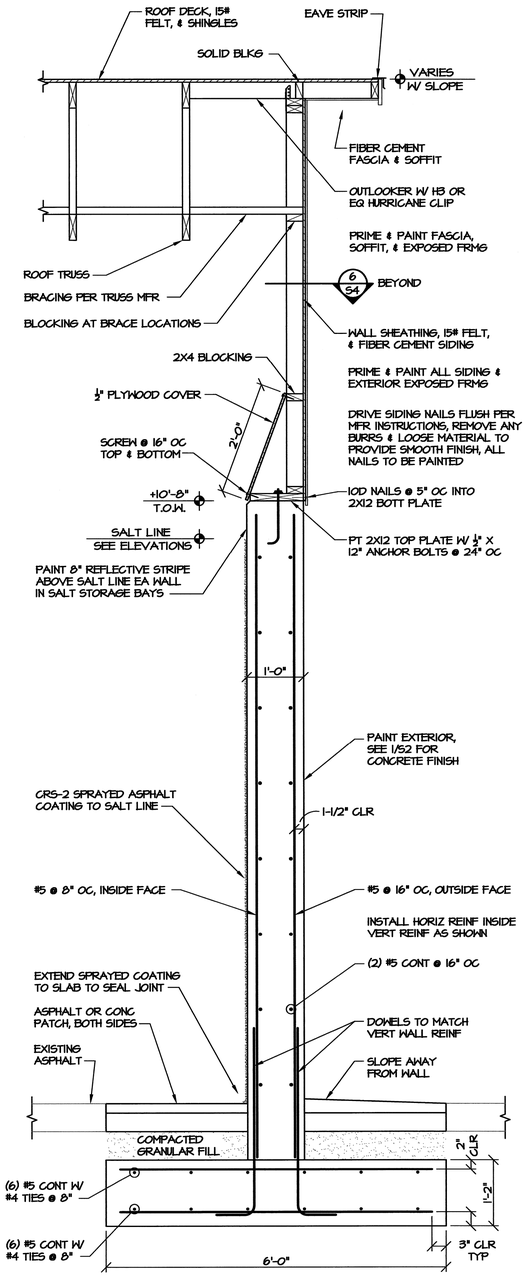

2/S3 SECTION AT SIDE WALL

SCALE: 3/4" = 1'-0"

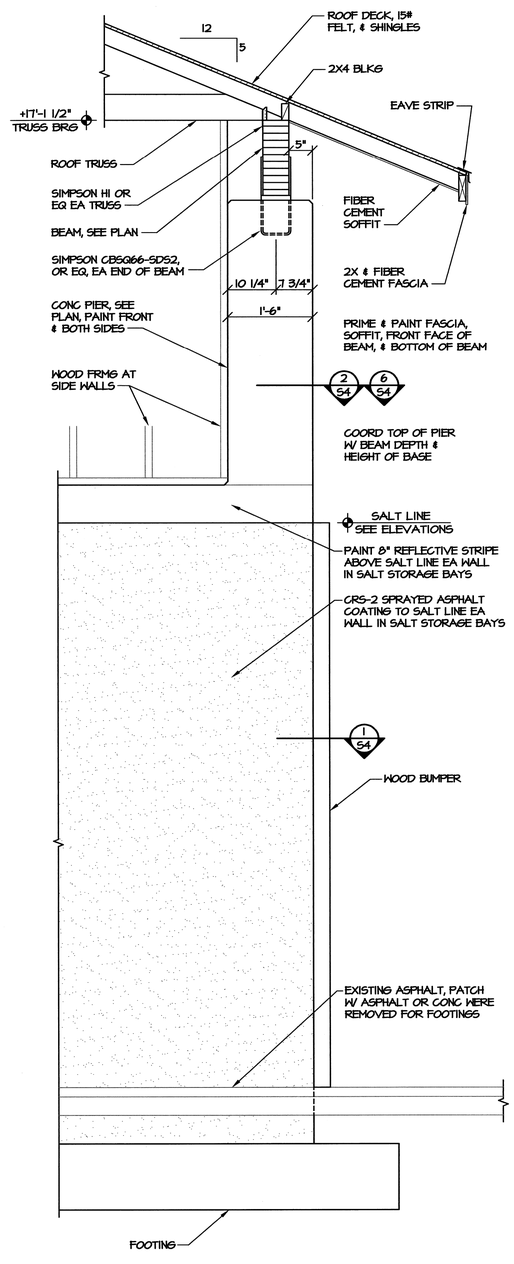

1/S3 SECTION AT FRONT OF BUILDING

SCALE: 3/4" = 1'-0"

NORTH CAROLINA PROFESSIONAL ENGINEER SEAL MICHAEL D. MOUNTCASTLE
7-28-14

FACILITIES DESIGN
ARCHITECTS & ENGINEERS
FACILITY MANAGEMENT DIVISION
1 SOUTH WILMINGTON STREET
919/707-4540 FAX 919/715-0399
RALEIGH, NORTH CAROLINA 27601

NORTH CAROLINA DEPARTMENT OF PUBLIC SAFETY

PROJECT:

FOUR BAY SALT STORAGE

HIGHWAY DIVISION 7, NCDOT
ROCKINGHAM COUNTY, NC
SCO ID# 09-07377-011

SCO ID#:	09-07377-011
REVISIONS NO.	DATE
1	07-28-14
DATE ISSUED:	04-17-14
DRAWN BY:	MDM
CHECKED BY:	MDM
SHEET NO.	S3
	3 OF 4

GENERAL NOTES:

A. GENERAL

1. See specifications for further information. In case of conflict between specifications & drawings, contact architect for resolution.
2. Contractor is responsible for coordination & distribution of all changes in contract documents to all subcontractors.
3. Contractor shall verify all field conditions, elevations, & dimensions prior to construction. Do not scale from plans.
4. Means & methods of construction, including temporary bracing, shoring, & jobsite safety, are the responsibility of the contractor.
5. Structural frame shall be braced until erection is complete & permanent connections & bracing are installed.
6. Provide silt fence or other erosion & sediment control measures as required.
7. If demolition is included in project, sawcut all edges of existing slab and asphalt to remain adjacent to new construction.

B. FOUNDATION

1. Footing excavations shall be reviewed by a geotechnical engineer or construction testing agency approved by the architect or engineer.
2. Footing depths shown are based on geotechnical investigation or presumptive soil properties. Soft or unsuitable soils shall be removed & replaced with suitable fill as specified.
3. Under slabs & footings, remove all topsoil, trash, & organic material, & replace with select fill compacted to 95% maximum density as measured by the Standard Proctor Method (ASTM 698) in 12 inch maximum lifts. The top 12" shall be compacted to 98% maximum density.
4. Contractor is responsible for shoring while excavating near existing structures.

C. CONCRETE

1. See plans for required compressive strength of concrete.
2. Coordinate floor slopes and depressions with arch and plumbing plans. Maintain specified slab thickness below depressed or sloped areas.
3. If not specified on plans, provide sawed slab control joints in slabs on grade spaced at not more than 48 times the slab thickness.
4. Reinforcing steel shall meet ASTM A 615, Grade 60.
5. Welded wire reinforcement shall conform to ASTM A 185 & A 82.
6. Grout under all columns & beam bearing plates with non-shrink, non-metallic grout which meets ASTM C 1107.
7. Clear distance from face of concrete to main reinforcing:

Suspended slabs and joists:	1"
Grade beams, pedestals, columns, walls:	2"
Footings & walls cast against earth:	3"

8. Provide (2) #4 x 48" diagonal corner bars at center of slab at all corners of floor slab openings.
9. Lap all reinforcement splices 48 bar diameters, UON.
10. Detailing, fabrication, & installation of reinforcing steel shall conform to ACI "Manual of Standard Practice for Detailing Reinforced Concrete Structures" (ACI 315).
11. Workmanship, tolerances, & concrete placement shall conform to "Standard Specifications for Structural Concrete" (ACI 301).
12. Chamfer exposed edges of concrete 3/4", UON.
13. Anchor bolts shall conform to ASTM F 1554, Grade 36. Anchor bolts, nuts, & washers shall be galvanized.

F. WOOD

1. Structural lumber shall be SPF #2 or better, UON. Wood for fabricated trusses shall be SYP #2 or better, except that webs may be SYP #3.
2. Wood in contact with concrete or masonry shall be treated.
3. Straps, ties, hangers, & other connection hardware shall be galvanized.
4. Connections not otherwise detailed shall be in accordance with Tables 2304.9.1.1 thru 2304.9.1.6 of the NC State Building Code.
5. Trusses shall be designed for the full dead & live loads specified in the contract. Submit truss shop drawings bearing the seal of a registered professional engineer licensed in the state of NC. Show truss layout & truss designs including required bracing. Bracing design is the truss designer's responsibility.
6. Contractor shall install both temporary and permanent bracing. Note that permanent bracing is often shown on individual truss calculation pages instead of the truss layout sheet, especially where there is no hard ceiling applied to truss.
7. Additional bracing may be required by engineer of record as indicated on plans for support of gable walls or other items.
8. Install blocking in walls & ceiling where required for partitions, fixtures, & other misc items. Coordinate with all trades.

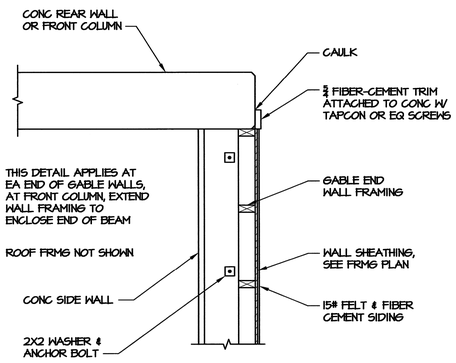

6/S4 GABLE WALL TRIM DETAIL
SCALE: 3/4" = 1'-0"

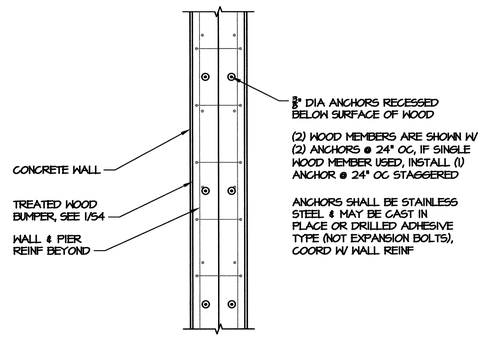

3/S4 WOOD BUMPER ATTACHMENT
SCALE: 3/4" = 1'-0"

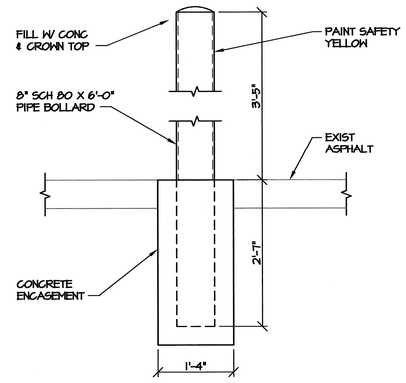

5/S4 BOLLARD DETAIL
SCALE: 3/4" = 1'-0"

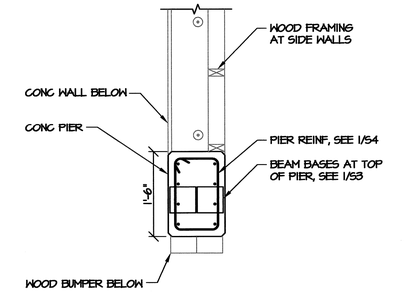

2/S4 CONCRETE PIER
SCALE: 3/4" = 1'-0"

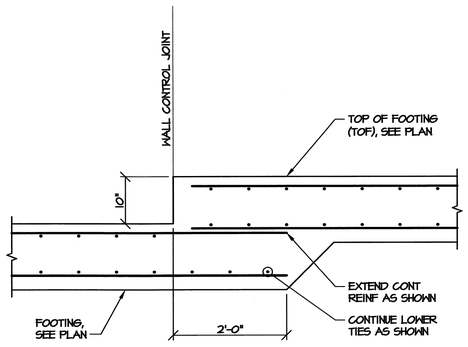

7/S4 STEPPED FOOTING
SCALE: 3/4" = 1'-0"

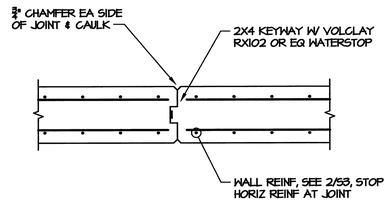

4/S4 WALL CONTROL JOINT
SCALE: 3/4" = 1'-0"

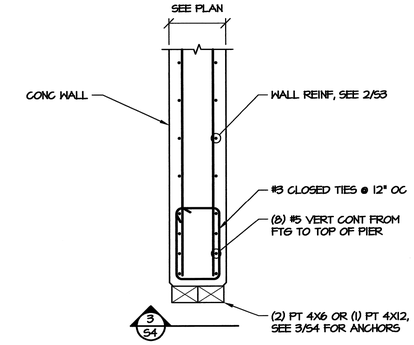

1/S4 WALL REINFORCEMENT
SCALE: 3/4" = 1'-0"

NORTH CAROLINA PROFESSIONAL ENGINEER SEAL 17326 T. D. MOUNTCASTLE
7-28-14

FACILITIES DESIGN
ARCHITECTS & ENGINEERS
FACILITY MANAGEMENT DIVISION
1 SOUTH WILMINGTON STREET
919/707-4540 FAX: 919/715-0399
RALEIGH, NORTH CAROLINA 27601

PROJECT:
FOUR BAY SALT STORAGE
HIGHWAY DIVISION 7, NCDOT
ROCKINGHAM COUNTY, NC
SCO ID# 09-07377-011

SCO ID#:	09-07377-011
REVISIONS NO.	DATE
1	07-28-14
DATE ISSUED:	04-17-14
DRAWN BY:	MDM
CHECKED BY:	MDM

SHEET NO.
S4
4 OF 4

Salt Dome E1

EXISTING PANEL "A"
NEMA 3R

MAKE: CUTLER HAMMER | RATING: 120/240 1 PHASE 3 WIRE | 100A MAIN CIRCUIT BREAKER
TYPE: BR LOAD CENTER | MOUNTING: SURFACE | EQUIPMENT GROUND BUS ____ ☒YES ☐NO
OR APPROVED EQUAL * | MINIMUM AIC: 22,000 | SERVICE ENTRY RATED ____ ☒YES ☐NO

LOAD SERVICE	CKT BRKR	WATTS PER PHASE A	WATTS PER PHASE B	CKT NO	NEUTRAL A B	CKT NO	WATTS PER PHASE A	WATTS PER PHASE B	CKT BRKR	LOAD SERVICE
DOME LIGHT	20A	1440	0	1		2	460	0	20A	NIGHT LIGHT
FAN	20A	0	780	3		4	0	384	20A	4-BAY LIGHTING
RECEPTACLES	20A	540	0	5		6	5760	0	60A	BRINE SUB-PANEL
4-BAY RECEPTACLES	20A	0	360	7		8	0	5760	60A	BRINE SUB-PANEL
				9		10				
				11		12				
				13		14				
				15		16				
				17		18				
				19		20				
NOTES	SUB-TOTALS 'B'				100A BUS				SUB-TOTALS 'A'	TOTAL CONNECTED LOAD
					100A LUGS				SUB-TOTALS 'B'	
					100A FEED				GRAND TOTAL	
					VERIFY SIZE				AMPS/PHASE	

NEC ALLOWABLE DEMAND FACTORS

1. DEMAND FACTORS PER NEC 220
2. LARGEST OF: NEC TABLE 220.12 OR CONNECTED LOAD
3. NEC TABLE 220.56
4. NEC 220.51
5. NEC 220.43A, 200 VA/LINEAR FT
6. NON-COINCIDENT LOADS, LARGEST OF THE TWO LOADS IS COUNTED

DIVERSIFIED LOAD SUMMARY

LOAD TYPE		DEMAND FACTOR①	A	B	TOTAL DIVERSIFIED LOAD
GENERAL LIGHTING ②		125%	2376	460	2855
TRACK LIGHTING		125%	0	0	
GENERAL USE		≤10KVA@100%	540	360	900
RECEPTACLES		>10KVA@50%	0	0	
MOTORS AND EQUIPMENT	LARGEST	125%	0	0	
	ALL OTHERS	100%	0	0	
WATER HEATERS		125%	0	0	
KITCHEN EQUIPMENT ③		100%	0	0	
FIX. ELEC. SPACE HEAT. ④		100%	0	0	
SHOW WINDOW LIGHTS ⑤		125%	0	0	
SUB-PANEL		100%	5760	5760	11520
MISC		100%	0	780	780
PHASE (TOTAL VA)			8675	7380	16055
		TOTAL AMPS	73	62	VOLT AMPS / VOLTS = 67 TOTAL AMPS

* OR APPROVED EQUAL BY SQUARE D OR GE.

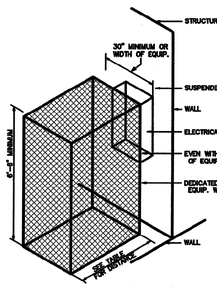

ELECTRICAL EQUIPMENT WORKING CLEARANCE PER ARTICLE 110-26 OF N.E.C.

WORKING CLEARANCES				
VOLTAGE TO GROUND NOMINAL	MIN. CLEAR DISTANCE IN FEET			
	CONDITION:	1	2	3
0-150		3	3	3
151-600		3	3-1/2	4

THIS FIGURE ILLUSTRATES THE WORKING SPACE IN FRONT OF THE ELECTRICAL EQUIPMENT REQUIRED BY SECTION 110-16 OF THE N.E.C.

WHERE THE CONDITIONS ARE AS FOLLOWS:

1. EXPOSED LIVE PARTS ON ONE SIDE AND NO LIVE OR GROUNDED PARTS ON THE OTHER SIDE OF THE WORKING SPACE, OR EXPOSED LIVE PARTS ON BOTH SIDES EFFECTIVELY GUARDED BY SUITABLE WOOD OR INSULATED SUBBARS OPERATING AT NOT OVER 300V SHALL NOT BE CONSIDERED LIVE PARTS.
2. EXPOSED LIVE PARTS ON ONE SIDE AND GROUNDED PARTS ON THE OTHER SIDE.
3. EXPOSED LIVE PARTS ON BOTH SIDES OF THE WORK SPACE (NOT GUARDED AS PROVIDED IN CONDITION 1) WITH THE OPERATOR BETWEEN.

2 ELECTRICAL CLEARANCES
SCALE: NOT TO SCALE

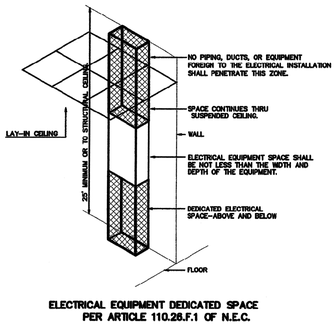

ELECTRICAL EQUIPMENT DEDICATED SPACE PER ARTICLE 110.26.F.1 OF N.E.C.

1 DEDICATED SPACE
SCALE: NOT TO SCALE

ELECTRICAL SYSTEMS AND EQUIPMENT

METHOD OF COMPLIANCE
PRESCRIPTIVE ___X___ PERFORMANCE_____ ENERGY COST BUDGET_____

Provide a standard riser diagram which indicates designated points for check metering
Provide a standard panel schedule description which identifies different enduse loads.

Lighting schedule:

See Light Fixture Schedule:
- lamp type required in fixture
- number of lamps in fixture
- ballast type used in fixture
- number of ballasts in fixture
- total wattage in fixture
- total interior wattage specified vs. allowed

Equipment schedules with motors (not used for mechanical systems) NA

motor horsepower	NA
number of phases	NA
minimum efficiency	NA
motor type	NA
# of poles	NA

DESIGNER STATEMENT

I hereby certify that the design of this building complies with the mechanical systems, services systems, and equipment requirements of the North Carolina State Building Code, Energy Edition.

ELECTRICAL LEGEND

- FLUORESCENT STRIP – SUSPENDED, CEILING OR WALL MOUNT
  REFER TO LIGHTING PLANS AND FIXTURE SCHEDULE.
- WP/GFI — DUPLEX RECEPTACLE – 120V; MOUNT 18" TO CENTER AFF UNLESS NOTED OTHERWISE; "WP" INDICATES WEATHER PROOF, "GFI" INDICATES GROUND FAULT CURRENT INTERRUPT PROTECTED. "S" INDICATES SHUNT TRIP PROTECTED.
- SINGLE-POLE HOMERUN TO PANELBOARD
- BRANCH CIRCUIT WIRING
- SWITCH LEG
- GROUND CONNECTION
- PANEL A — DISTRIBUTION PANELBOARD
- DISCONNECTING MEANS AS REQUIRED BY CODE

LIGHTING SCHEDULE

MARK	MANUFACTURER NO.	CATALOG NO.	VOLT.	LAMPS NO.	LAMPS TYPE	LAMPS W	BALLAST TYPE	W/ FIXTURE	REMARKS
A	LITHONIA	DMW-332-AR-1120-EB	120	3	T8	32	EB	96	WALL MOUNT STRIP, WEATHER TIGHT, SINGLE BALLAST, FIBERGLASS HOUSING, GASKETED COVER. * *
	COOPER	VT2-332-LEX-120V-EB8-WL							
	DAY-BRITE	DWE-332-120-1/2-EB-LT							

* OR APPROVED EQUAL, PROVIDE CUT SHEETS FOR OWNER APPROVAL PRIOR TO ORDERING FIXTURES. FOR FLUORESCENT FIXTURES CONTROLLED BY MOTION SENSOR, PROVIDE "PROGRAMMED RAPID START" BALLASTS. CATALOG NUMBERS ARE FOR REFERENCE ONLY, ACTUAL NUMBERS MAY VARY. "EB" DENOTES ELECTRONIC BALLAST.

** VERIFY FIXTURE HAS INTEGRAL LOCAL DISCONNECTING MEANS PER NEC 410.130 (G) (2006)

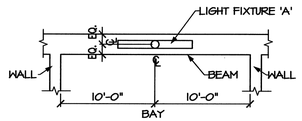

NOTES:
1. SURFACE MOUNT LIGHT FIXTURE TO BEAM WITH LENS FACING INTO BAY.
2. CENTER LIGHT FIXTURE ON BEAM.
3. TYPICAL OF FOUR (4) FIXTURES.

4 EI FIXTURE MOUNTING DETAIL
NOT TO SCALE

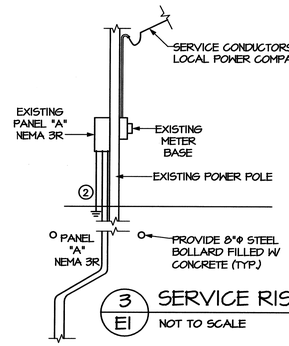

3 EI SERVICE RISER DETAIL
NOT TO SCALE

RISER WIRE SCHEDULE

① 20A: 2-#12, 1-#12 GRD IN 1" CONDUIT

② #6 CU GND TO BUILDING STEEL, FOUNDATION STEEL AND METALLIC WATER MAIN AND #6 CU GND TO 10'x 3/4" DRIVEN GROUND ROD

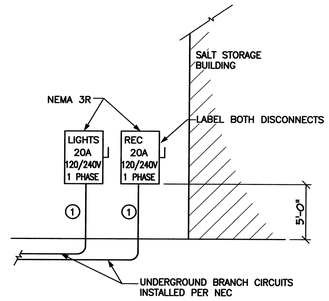

2 EI DISCONNECT DETAIL
NOT TO SCALE

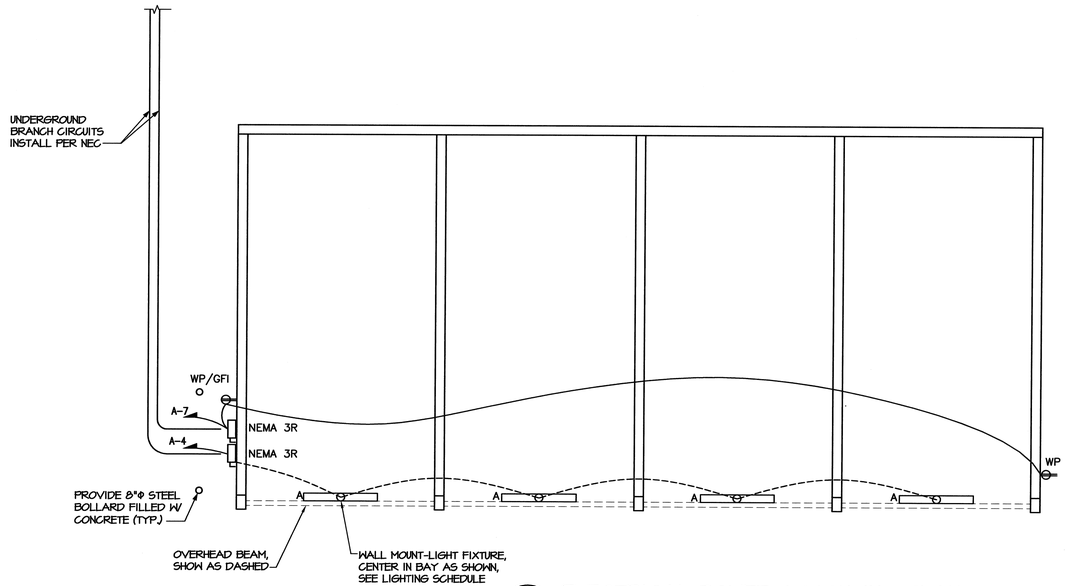

1 EI ELECTRICAL POWER & LIGHTING PLAN
SCALE: 1/8" = 1'-0"

FACILITIES DESIGN
ARCHITECTS & ENGINEERS
FACILITY MANAGEMENT DIVISION
1 SOUTH WILMINGTON STREET
919/707-4540 FAX: 919/715-0399
RALEIGH, NORTH CAROLINA 27601

NORTH CAROLINA DEPARTMENT OF TRANSPORTATION

NORTH CAROLINA PROFESSIONAL ENGINEER SEAL 20040 WILLIAM PETER TYREE 7.1.14

PROJECT:
FOUR BAY SALT STORAGE
HIGHWAY DIVISION 7, NCDOT
ROCKINGHAM COUNTY, NC
SCO ID# 09-07377-011

SCO ID#: 09-07377-011

REVISIONS
NO. | DATE

DATE ISSUED: 03-20-14
DRAWN BY: DDB
CHECKED BY: PTW
SHEET NO.
E1
1 OF 1