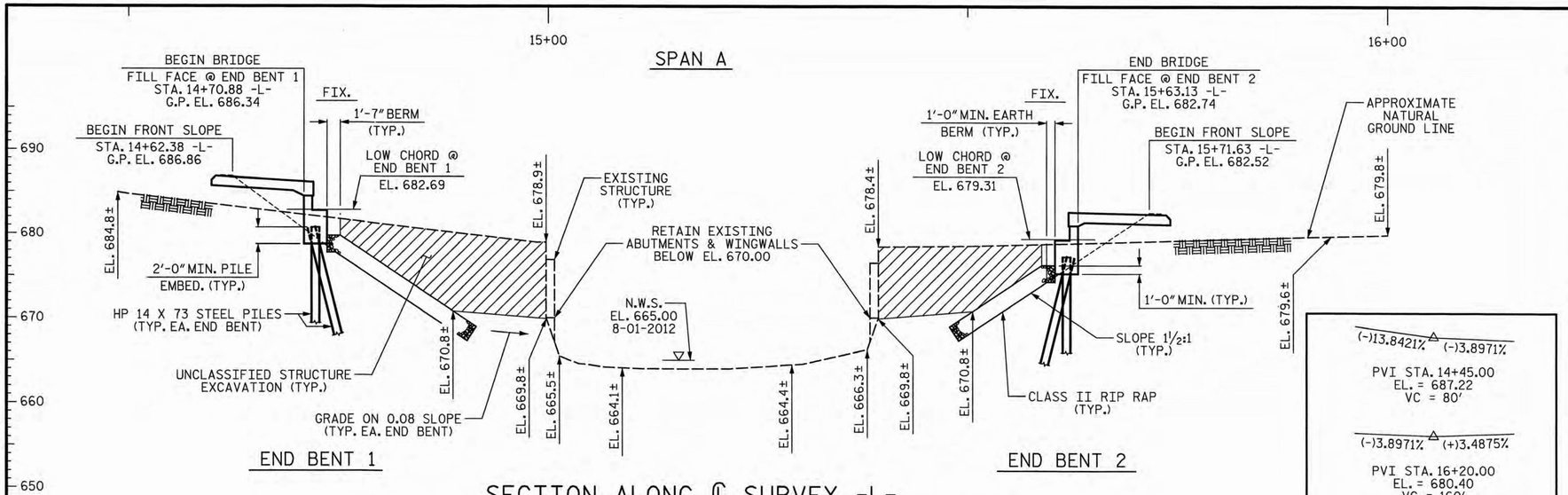

SECTION ALONG ℄ SURVEY -L-

APPROXIMATE NATURAL GROUND ELEVATIONS ARE ALONG THE EDGE OF THE BRIDGE ON THE UPSTREAM SIDE.

TOTAL BRIDGE LENGTH = 92'-3" (FILL FACE TO FILL FACE)

(-)13.8421% △ (-)3.8971%

PVI STA. 14+45.00
EL. = 687.22
VC = 80'

(-)3.8971% △ (+)3.4875%

PVI STA. 16+20.00
EL. = 680.40
VC = 160'

GRADE DATA -L-

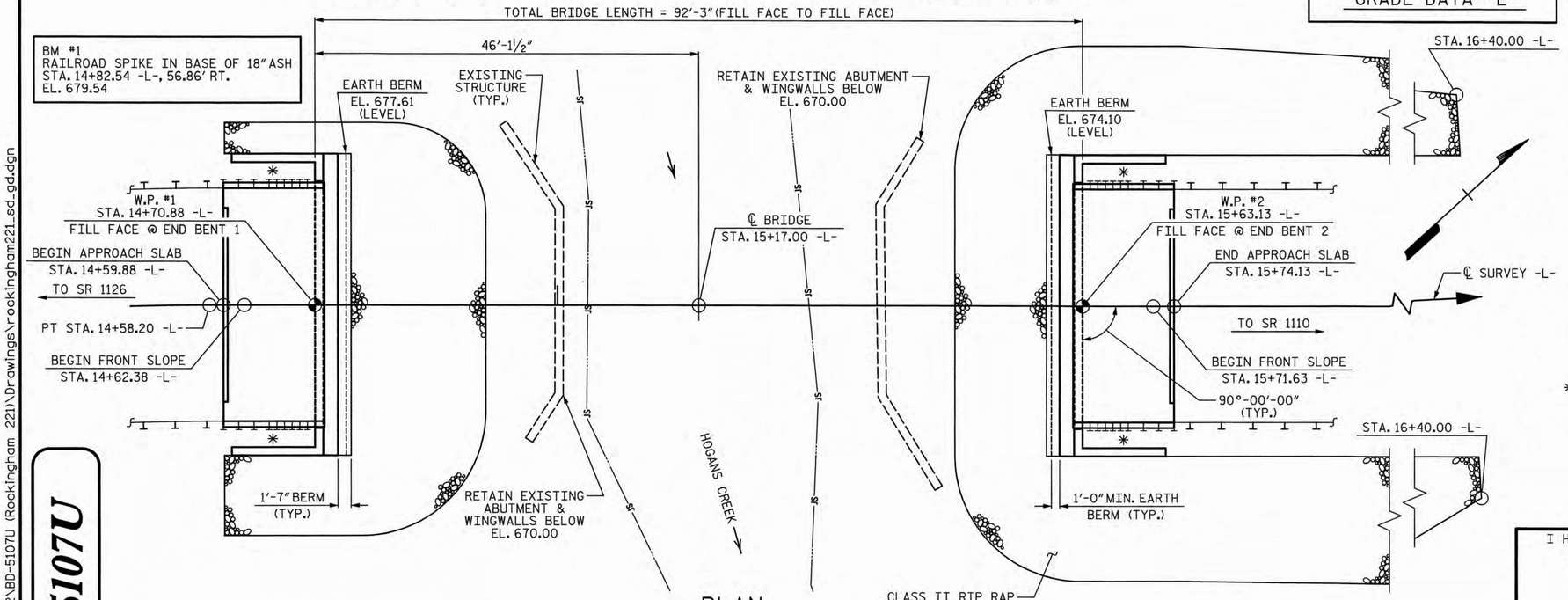

PLAN

PILES NOT SHOWN IN PLAN VIEW

NOTES:

ASSUMED LIVE LOAD = HL-93 OR ALTERNATE LOADING.

FOR OTHER DESIGN DATA AND GENERAL NOTES, SEE SHEET SN.

FOR EROSION CONTROL MEASURES SEE EROSION CONTROL PLANS.

THIS BRIDGE HAS BEEN DESIGNED IN ACCORDANCE WITH THE AASHTO LRFD BRIDGE DESIGN SPECIFICATIONS.

REMOVAL OF THE EXISTING BRIDGE SHALL BE PERFORMED SO AS NOT TO ALLOW DEBRIS TO FALL INTO THE WATER. THE CONTRACTOR SHALL REMOVE THE BRIDGE AND SUBMIT PLANS FOR DEMOLITION IN ACCORDANCE WITH ARTICLE 402-2 OF THE STANDARD SPECIFICATIONS.

THE MATERIAL SHOWN IN THE CROSS-HATCHED AREA SHALL BE EXCAVATED FOR A DISTANCE OF 25 FT. EACH SIDE OF CENTERLINE ROADWAY AS DIRECTED BY THE ENGINEER. THIS WORK WILL BE PAID FOR AT THE CONTRACT LUMP SUM PRICE FOR UNCLASSIFIED STRUCTURE EXCAVATION. SEE SECTION 412 OF THE STANDARD SPECIFICATIONS.

THE EXISTING STRUCTURE CONSISTING OF 1 SPAN @ 40'-2" WITH A REINFORCED CONCRETE DECK ON I BEAMS WITH A CLEAR ROADWAY WIDTH OF 18.3' ON MASS CONCRETE ABUTMENTS AND LOCATED AT THE SITE OF THE PROPOSED STRUCTURE SHALL BE REMOVED EXCEPT AS NOTED. THE EXISTING BRIDGE IS PRESENTLY POSTED BELOW THE LEGAL LOAD LIMIT. SHOULD THE STRUCTURAL INTEGRITY OF THE BRIDGE FURTHER DETERIORATE, THIS LOAD LIMITATION MAY BE REDUCED AS FOUND NECESSARY DURING THE LIFE OF THE PROJECT.

THE SUBSTRUCTURE OF THE EXISTING BRIDGE INDICATED ON THE PLANS IS FROM THE BEST INFORMATION AVAILABLE. SINCE THIS INFORMATION IS SHOWN FOR THE CONVENIENCE OF THE CONTRACTOR, THE CONTRACTOR SHALL HAVE NO CLAIM WHATSOEVER AGAINST THE DEPARTMENT OF TRANSPORTATION FOR ANY DELAYS OR ADDITIONAL COST INCURRED BASED ON DIFFERENCES BETWEEN THE EXISTING BRIDGE SUBSTRUCTURE SHOWN ON THE PLANS AND THE ACTUAL CONDITIONS AT THE PROJECT SITE.

THIS STRUCTURE HAS BEEN DESIGNED IN ACCORDANCE WITH "HEC 18-EVALUATING SCOUR AT BRIDGES."

FOR SUBMITTAL OF WORKING DRAWINGS, SEE SPECIAL PROVISIONS.

FOR FALSEWORK AND FORMWORK, SEE SPECIAL PROVISIONS.

FOR CRANE SAFETY, SEE SPECIAL PROVISIONS.

FOR GROUT FOR STRUCTURES, SEE SPECIAL PROVISIONS.

ASPHALT WEARING SURFACE IS INCLUDED IN ROADWAY QUANTITY ON ROADWAY PLANS.

THE CONTRACTOR SHALL PROVIDE INDEPENDENT ASSURANCE SAMPLES OF REINFORCING STEEL AS FOLLOWS: FOR PROJECTS REQUIRING UP TO 400 TONS OF REINFORCING STEEL, ONE 30 INCH SAMPLE OF EACH SIZE BAR USED, AND FOR PROJECTS REQUIRING OVER 400 TONS OF REINFORCING STEEL, TWO 30 INCH SAMPLES OF EACH SIZE BAR USED. THE BARS FROM WHICH THE SAMPLES ARE TAKEN MUST THEN BE SPLICED WITH REPLACEMENT BARS OF THE SIZE AND LENGTH OF THE SAMPLE, PLUS A MINIMUM LAP SPLICE OF THIRTY BAR DIAMETERS. PAYMENT FOR THE SAMPLES OF REINFORCING STEEL SHALL BE CONSIDERED INCIDENTAL TO VARIOUS PAY ITEMS.

INASMUCH AS THE PAINT SYSTEM ON THE EXISTING STRUCTURAL STEEL CONTAINS LEAD, THE CONTRACTOR'S ATTENTION IS DIRECTED TO ARTICLE 107-1 OF THE STANDARD SPECIFICATIONS. ANY COSTS RESULTING FROM COMPLIANCE WITH APPLICABLE STATE OR FEDERAL REGULATIONS PERTAINING TO HANDLING OF MATERIALS CONTAINING LEAD BASED PAINT SHALL BE INCLUDED IN THE BID PRICE FOR "REMOVAL OF EXISTING STRUCTURE AT STATION 15+17.00 -L-."

NO KNOWN UTILITY CONFLICTS.

✱ DENOTES GUARDRAIL CONNECTION REQUIRED, SEE "GUARDRAIL ANCHOR UNIT" SHEET.

FOR OREGON 2 TUBE METAL RAIL, SEE SPECIAL PROVISIONS.

FOR 1'-7" X 1'-1½" CONCRETE CURB, SEE SPECIAL PROVISIONS.

FOUNDATION NOTES:

FOR PILES, SEE SECTION 450 OF THE STANDARD SPECIFICATIONS.

PILES AT END BENTS 1 & 2 ARE DESIGNED FOR A FACTORED RESISTANCE OF 130 TONS PER PILE.

DRIVE PILES AT END BENT 1 & 2 TO A REQUIRED DRIVING RESISTANCE OF 220 TONS PER PILE.

STEEL H-PILE POINTS ARE REQUIRED FOR STEEL H-PILES AT END BENT 1 & 2. FOR STEEL PILE POINTS, SEE SECTION 450 OF THE STANDARD SPECIFICATIONS.

HORIZONTAL CURVE DATA

PI STA. 12+95.61 -L-
Δ = 73°-38'-19.2" (RT.)
D = 18°-54'-34.2"
L = 389.43'
T = 226.83'
R = 303.00'

HYDRAULIC DATA:

DESIGN DISCHARGE	= 3100 CFS
FREQUENCY OF DESIGN FLOOD	= 25 YEAR
DESIGN HIGH WATER ELEVATION	= 673.70
DRAINAGE AREA	= 18.3 SQ. MI.
BASE DISCHARGE (Q 100)	= 4612 CFS
BASE HIGH WATER ELEVATION	= 675.95

OVERTOPPING FLOOD DATA:

OVERTOPPING DISCHARGE	= 9500 CFS
FREQUENCY OF OVERTOPPING FLOOD	= 500+ YEAR
OVERTOPPING FLOOD ELEVATION	= 682.00 ✱✱

✱✱ OVERTOPPING OCCURS AT ROADWAY SAG STA. 16+24.00 -L- ON ROADWAY HIGH (RIGHT) SIDE.

I HEREBY CERTIFY THESE PLANS ARE THE AS-BUILT PLANS

PROJECT NO. BD-5107U
ROCKINGHAM COUNTY
STATION: 15+17.00 -L-

REPLACES BRIDGE #221

STATE OF NORTH CAROLINA
DEPARTMENT OF TRANSPORTATION
RALEIGH

GENERAL DRAWING

FOR BRIDGE ON SR 1125
(WILLIAMS RD.) OVER HOGANS CREEK
BETWEEN SR 1126 AND SR 1110

27'-10" CLEAR ROADWAY - 90° SKEW

GENERAL DRAWING
PREPARED BY:
SIMPSON ENGINEERS & ASSOCIATES
5640 Dillard Drive
Suite 200
Cary, NC 27518
(919) 852-0468
(919) 852-0598 (Fax)
www.simpsonengr.com
LICENSURE NO. C2521

NORTH CAROLINA PROFESSIONAL SEAL 11268 ENGINEER BETSY S. COX
Betsy S. Cox 10-2-14

REVISIONS							
NO.	BY:	DATE:	NO.	BY:	DATE:	SHEET NO.	S-1
1			3			TOTAL SHEETS	19
2			4				

DRAWN BY : T. BANKOVICH DATE : 10-14
CHECKED BY : B.S. COX DATE : 10-14

TIP:BD-5107U

10/2/2014 10:51:56 AM G:\Projects\2012\BD-5107U (Rockingham 221)\Drawings\rockingham221_sd_gd.dgn

TOTAL BILL OF MATERIAL

	REMOVAL OF EXISTING STRUCTURE	UNCLASSIFIED STRUCTURE EXCAVATION	CLASS A CONCRETE	BRIDGE APPROACH SLABS	REINFORCING STEEL	HP 14 X 73 STEEL PILES		STEEL PILE POINTS	RIP RAP CLASS II (2'-0" THICK)	GEOTEXTILE FOR DRAINAGE	ELASTOMERIC BEARINGS	3'-0" X 2'-9" PRESTRESSED CONCRETE BOX BEAMS		OREGON 2 TUBE METAL RAIL	1'-7" X 1'-1½" CONCRETE CURB
	LUMP SUM	LUMP SUM	CU. YDS.	LUMP SUM	LBS.	NO.	LIN. FT.	EACH	TONS	SQ. YDS.	LUMP SUM	NO.	LIN. FT.	LIN. FT.	LIN. FT.
SUPERSTRUCTURE												10	900.00	165.00	180.00
END BENT 1			25.6		3364	5	100	5	195	215					
END BENT 2			25.6		3364	5	75	5	525	580					
TOTAL	LUMP SUM	LUMP SUM	51.2	LUMP SUM	6728	10	175	10	720	795	LUMP SUM	10	900.00	165.00	180.00

PROJECT NO. BD-5107U
ROCKINGHAM COUNTY
STATION: 15+17.00 -L-

STATE OF NORTH CAROLINA
DEPARTMENT OF TRANSPORTATION
RALEIGH

BILL OF MATERIAL

GENERAL DRAWING PREPARED BY:
SIMPSON ENGINEERS & ASSOCIATES
5640 Dillard Drive
Suite 200
Cary, NC 27518
(919) 852-0468
(919) 852-0598 (Fax)
www.simpsonengr.com
LICENSURE NO. C2521

NORTH CAROLINA PROFESSIONAL SEAL 11268 ENGINEER BETSY S. COX
Betsy S. Cox 10-2-14

REVISIONS						SHEET NO.
NO.	BY:	DATE:	NO.	BY:	DATE:	S-2
1			3			TOTAL SHEETS
2			4			19

DRAWN BY : T. BANKOVICH DATE : 10-14
CHECKED BY : B.S. COX DATE : 10-14

10/2/2014 10:51:56 AM G:\Projects\2012\BD-5107U (Rockingham 221)\Drawings\rockingham221_sd_gd.dgn

LOAD AND RESISTANCE FACTOR RATING (LRFD) SUMMARY FOR PRESTRESSED CONCRETE GIRDERS

LEVEL		VEHICLE	WEIGHT (W) (TONS)	CONTROLLING LOAD RATING	MINIMUM RATING FACTORS (RF)	TONS = W X RF	STRENGTH I LIMIT STATE											SERVICE III LIMIT STATE						COMMENT NUMBER
								MOMENT					SHEAR						MOMENT					
							LIVELOAD FACTORS	DISTRIBUTION FACTORS (DF)	RATING FACTOR	SPAN	GIRDER LOCATION	DISTANCE FROM LEFT END OF SPAN (ft)	DISTRIBUTION FACTORS (DF)	RATING FACTOR	SPAN	GIRDER LOCATION	DISTANCE FROM LEFT END OF SPAN (ft)	LIVELOAD FACTORS	DISTRIBUTION FACTORS (DF)	RATING FACTOR	SPAN	GIRDER LOCATION	DISTANCE FROM LEFT END OF SPAN (ft)	
DESIGN LOAD RATING		HL-93(Inv)	N/A	1	1.04	--	1.75	0.269	**1.04**	A	EL	**44.25**	0.483	1.09	A	EL	4.425	0.80	0.269	1.12	A	EL	44.25	
		HL-93(Opr)	N/A	--	1.35	--	1.35	0.269	1.35	A	EL	44.25	0.483	1.41	A	EL	4.425	N/A	--	--	--	--	--	
		HS-20(Inv)	36.000	2	1.42	51.070	1.75	0.269	**1.42**	A	EL	**44.25**	0.483	1.43	A	EL	4.425	0.80	0.269	1.52	A	EL	44.25	
		HS-20(Opr)	36.000	--	1.84	66.202	1.35	0.269	1.84	A	EL	44.25	0.483	1.85	A	EL	4.425	N/A	--	--	--	--	--	
LEGAL LOAD RATING	SV	SNSH	13.500	--	3.56	48.023	1.4	0.269	4.14	A	EL	44.25	0.483	4.36	A	EL	4.425	0.80	0.269	3.56	A	EL	44.25	
		SNGARBS2	20.000	--	2.60	51.995	1.4	0.269	3.03	A	EL	44.25	0.483	3.06	A	EL	4.425	0.80	0.269	2.60	A	EL	44.25	
		SNAGRIS2	22.000	--	2.44	53.705	1.4	0.269	2.84	A	EL	44.25	0.483	2.83	A	EL	4.425	0.80	0.269	2.44	A	EL	44.25	
		SNCOTTS3	27.250	--	1.77	48.197	1.4	0.269	2.06	A	EL	44.25	0.483	2.17	A	EL	4.425	0.80	0.269	1.77	A	EL	44.25	
		SNAGGRS4	34.925	--	1.46	50.934	1.4	0.269	1.70	A	EL	44.25	0.483	1.78	A	EL	4.425	0.80	0.269	1.46	A	EL	44.25	
		SNS5A	35.550	--	1.43	50.746	1.4	0.269	1.66	A	EL	44.25	0.483	1.79	A	EL	4.425	0.80	0.269	1.43	A	EL	44.25	
		SNS6A	39.950	--	1.30	52.000	1.4	0.269	1.51	A	EL	44.25	0.483	1.62	A	EL	4.425	0.80	0.269	1.30	A	EL	44.25	
		SNS7B	42.000	--	1.24	52.048	1.4	0.269	1.44	A	EL	44.25	0.483	1.58	A	EL	4.425	0.80	0.269	1.24	A	EL	44.25	
	TTST	TNAGRIT3	33.000	--	1.58	52.301	1.4	0.269	1.84	A	EL	44.25	0.483	1.94	A	EL	4.425	0.80	0.269	1.58	A	EL	44.25	
		TNT4A	33.075	--	1.59	52.578	1.4	0.269	1.85	A	EL	44.25	0.483	1.90	A	EL	4.425	0.80	0.269	1.59	A	EL	44.25	
		TNT6A	41.600	--	1.29	53.753	1.4	0.269	1.50	A	EL	44.25	0.483	1.66	A	EL	4.425	0.80	0.269	1.29	A	EL	44.25	
		TNT7A	42.000	--	1.29	54.372	1.4	0.269	1.51	A	EL	44.25	0.483	1.63	A	EL	4.425	0.80	0.269	1.29	A	EL	44.25	
		TNT7B	42.000	--	1.33	55.835	1.4	0.269	1.55	A	EL	44.25	0.483	1.55	A	EL	4.425	0.80	0.269	1.33	A	EL	44.25	
		TNAGRIT4	43.000	--	1.27	54.695	1.4	0.269	1.48	A	EL	44.25	0.483	1.50	A	EL	4.425	0.80	0.269	1.27	A	EL	44.25	
		TNAGT5A	45.000	--	1.20	54.125	1.4	0.269	1.40	A	EL	44.25	0.483	1.48	A	EL	4.425	0.80	0.269	1.20	A	EL	44.25	
		TNAGT5B	45.000	3	1.19	53.609	1.4	0.269	1.39	A	EL	44.25	0.483	1.43	A	EL	4.425	0.80	0.269	**1.19**	A	EL	**44.25**	

LOAD FACTORS:

DESIGN LOAD RATING FACTORS	LIMIT STATE	γ_{DC}	γ_{DW}
	STRENGTH I	1.25	1.50
	SERVICE III	1.00	1.00

NOTES:

MINIMUM RATING FACTORS ARE BASED ON THE STRENGTH I AND SERVICE III LIMIT STATES.

ALLOWABLE STRESSES FOR SERVICE III LIMIT STATE ARE AS REQUIRED FOR DESIGN.

COMMENTS:

1.
2.
3.
4.

(#) CONTROLLING LOAD RATING

(1) DESIGN LOAD RATING (HL-93)

(2) DESIGN LOAD RATING (HS-20)

(3) LEGAL LOAD RATING **

** SEE CHART FOR VEHICLE TYPE

GIRDER LOCATION

I - INTERIOR GIRDER
EL - EXTERIOR LEFT GIRDER
ER - EXTERIOR RIGHT GIRDER

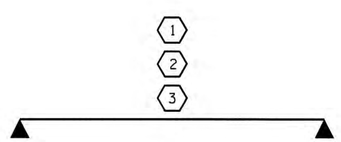

LRFR SUMMARY

PROJECT NO. BD-5107U
ROCKINGHAM COUNTY
STATION: 15+17.00 -L-

STATE OF NORTH CAROLINA
DEPARTMENT OF TRANSPORTATION
RALEIGH

STANDARD
LRFR SUMMARY FOR 90' BOX BEAM UNIT 90° SKEW
(NON-INTERSTATE TRAFFIC)

NORTH CAROLINA PROFESSIONAL SEAL 14855 ENGINEER DOUGLAS R. CALHOUN
9/26/14

REVISIONS						SHEET NO.
NO.	BY:	DATE:	NO.	BY:	DATE:	S-3
1			3			TOTAL SHEETS
2			4			19

ASSEMBLED BY :	ASORSENGINH	DATE :	10/2012
CHECKED BY :	D.R. CALHOUN	DATE :	9/2014
DRAWN BY :	TMG		11/11
CHECKED BY :	AAC		11/11

26-SEP-2014 13:24
S:\DPG2\Doug\DivisionProjects\BD-5107\BD-5107U\FinalPlans\BD5107U_SD_LRFR.dgn
asorsenginh

STD. NO. 33LRFR1_90S_90L

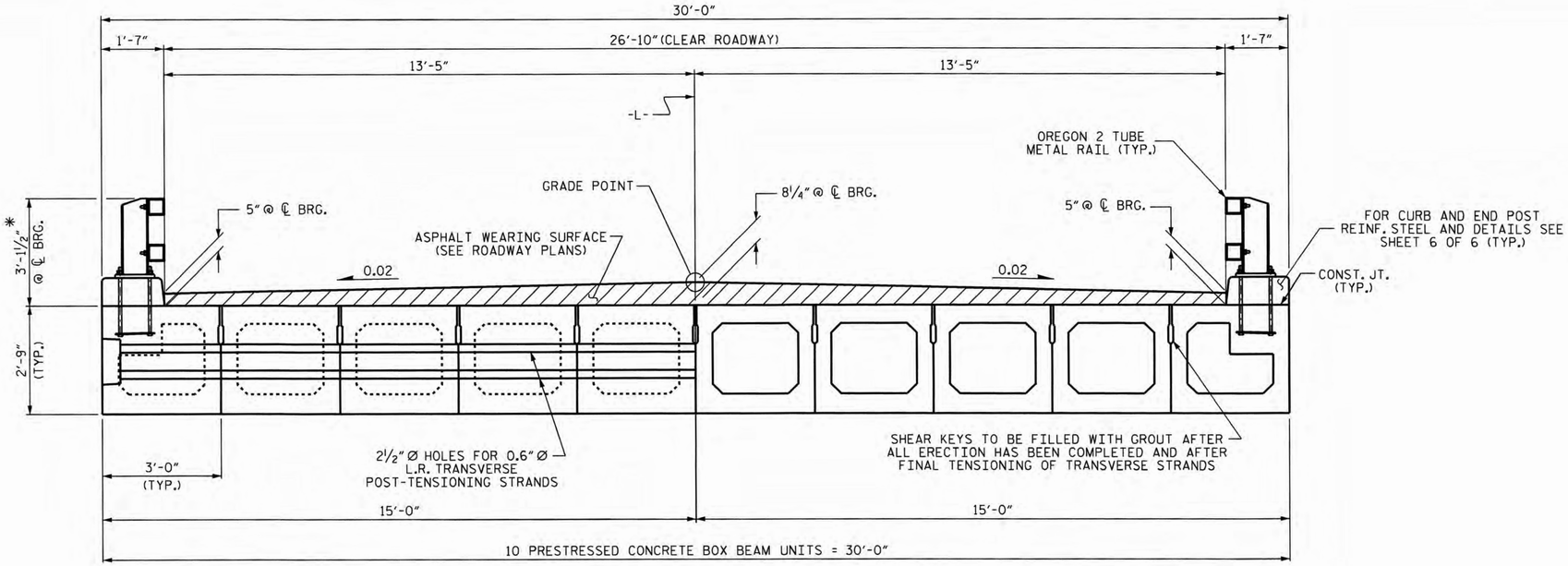

TYPICAL SECTION

* THE MAXIMUM CURB HEIGHT AND ASPHALT THICKNESS IS SHOWN. THE HEIGHT OF THE CURB AND ASPHALT THICKNESS VARIES WHILE THE TOP OF THE CURB FOLLOWS THE PROFILE OF THE GUTTERLINE. FOR CURB HEIGHT DETAILS AND ASPHALT THICKNESS, SEE SHEET 5 OF 6.

FIXED END

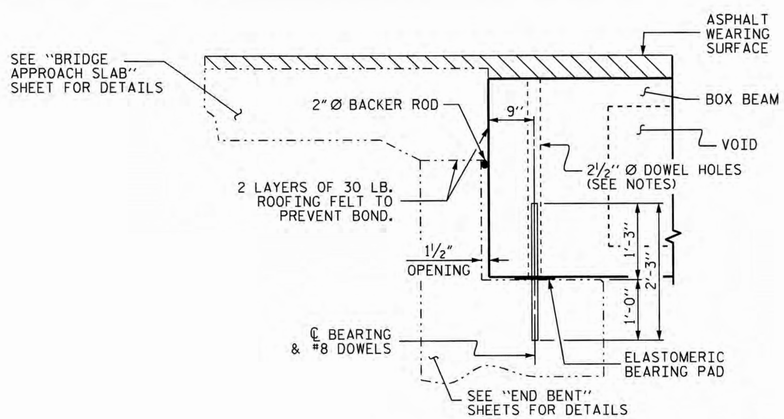

SECTION AT END BENT

NOTES

ALL PRESTRESSING STRANDS SHALL BE 7-WIRE LOW RELAXATION GRADE 270 STRANDS AND SHALL CONFORM TO AASHTO M203 EXCEPT FOR SAMPLING REQUIREMENTS WHICH SHALL BE IN ACCORDANCE WITH THE STANDARD SPECIFICATIONS.

ALL REINFORCING STEEL CAST WITH THE BOX BEAM SECTIONS SHALL BE GRADE 60 AND SHALL BE INCLUDED IN THE UNIT PRICE BID FOR PRESTRESSED CONCRETE BOX BEAMS.

FLAME CUTTING OF THE TRANSVERSE POST-TENSIONING STRAND IS NOT ALLOWED.

RECESSES FOR TRANSVERSE STRANDS SHALL BE GROUTED AFTER THE TENSIONING OF THE STRANDS.

THE 2½" Ø DOWEL HOLES AT FIXED ENDS OF BOX BEAM SECTIONS SHALL BE FILLED WITH NON-SHRINK GROUT.

THE BACKER RODS SHALL CONFORM TO THE REQUIREMENTS OF TYPE M BOND BREAKER. SEE SECTION 1028 OF THE STANDARD SPECIFICATIONS.

THE TRANSFER OF LOAD FROM THE ANCHORAGES TO THE BOX BEAM UNIT SHALL BE DONE WHEN THE CONCRETE HAS REACHED A COMPRESSIVE STRENGTH OF NOT LESS THAN 5900 PSI.

ALL REINFORCING STEEL IN CONCRETE CURB AND END POSTS SHALL BE EPOXY COATED.

PRESTRESSING STRANDS SHALL BE CUT FLUSH WITH THE BOX BEAM UNIT ENDS.

APPLY EPOXY PROTECTIVE COATING TO BOX BEAM UNIT ENDS.

THE LOCATION OF THE VOID DRAINS MAY BE SHIFTED SLIGHTLY WHERE NECESSARY TO CLEAR PRESTRESSING STRANDS OR TRANSVERSE REINFORCING STEEL.

FOR GROUT FOR STRUCTURES, SEE SPECIAL PROVISIONS.

THE PERMITTED THREADED INSERTS ARE DETAILED AS AN OPTION FOR THE CONTRACTOR TO ATTACH FALSEWORK AND FORMWORK DURING CONSTRUCTION.

THE PERMITTED THREADED INSERTS IN THE EXTERIOR UNITS SHALL BE SIZED BY THE CONTRACTOR, SPACED AT 4'-0" CENTERS AND GALVANIZED IN ACCORDANCE WITH SECTION 1076 OF THE STANDARD SPECIFICATIONS. STAINLESS STEEL THREADED INSERTS MAY BE USED AS AN ALTERNATE.

THE PERMITTED THREADED INSERTS SHALL BE GROUTED BY THE CONTRACTOR IMMEDIATELY FOLLOWING REMOVAL OF THE FALSEWORK.

THE COST OF THE PERMITTED THREADED INSERTS SHALL BE INCLUDED IN THE PRICE BID FOR THE PRECAST UNITS.

PROJECT NO. BD-5107U
ROCKINGHAM COUNTY
STATION: 15+17.00 -L-

SHEET 1 OF 6

STATE OF NORTH CAROLINA
DEPARTMENT OF TRANSPORTATION
RALEIGH

3'-0" X 2'-9" PRESTRESSED CONCRETE BOX BEAM UNIT

NORTH CAROLINA PROFESSIONAL SEAL 14855 ENGINEER DOUGLAS R. CALHOUN
09/26/14

REVISIONS						SHEET NO.
NO.	BY:	DATE:	NO.	BY:	DATE:	S-4
1			3			TOTAL SHEETS
2			4			19

ASSEMBLED BY : A. SORSENGINH		DATE : 10/2012	
CHECKED BY : D.R. CALHOUN		DATE : 9/2014	
DRAWN BY : DGE 8/11	REV. 8/14	MAA/TMG	
CHECKED BY : TMG 11/11			

26-SEP-2014 13:22
S:\DPG2\Doug\DivisionProjects\BD-5107\BD-5107U\FinalPlans\BD5107U_SD_BX.dgn
asorsenginh

STD. NO. STD.33PCBB1_30

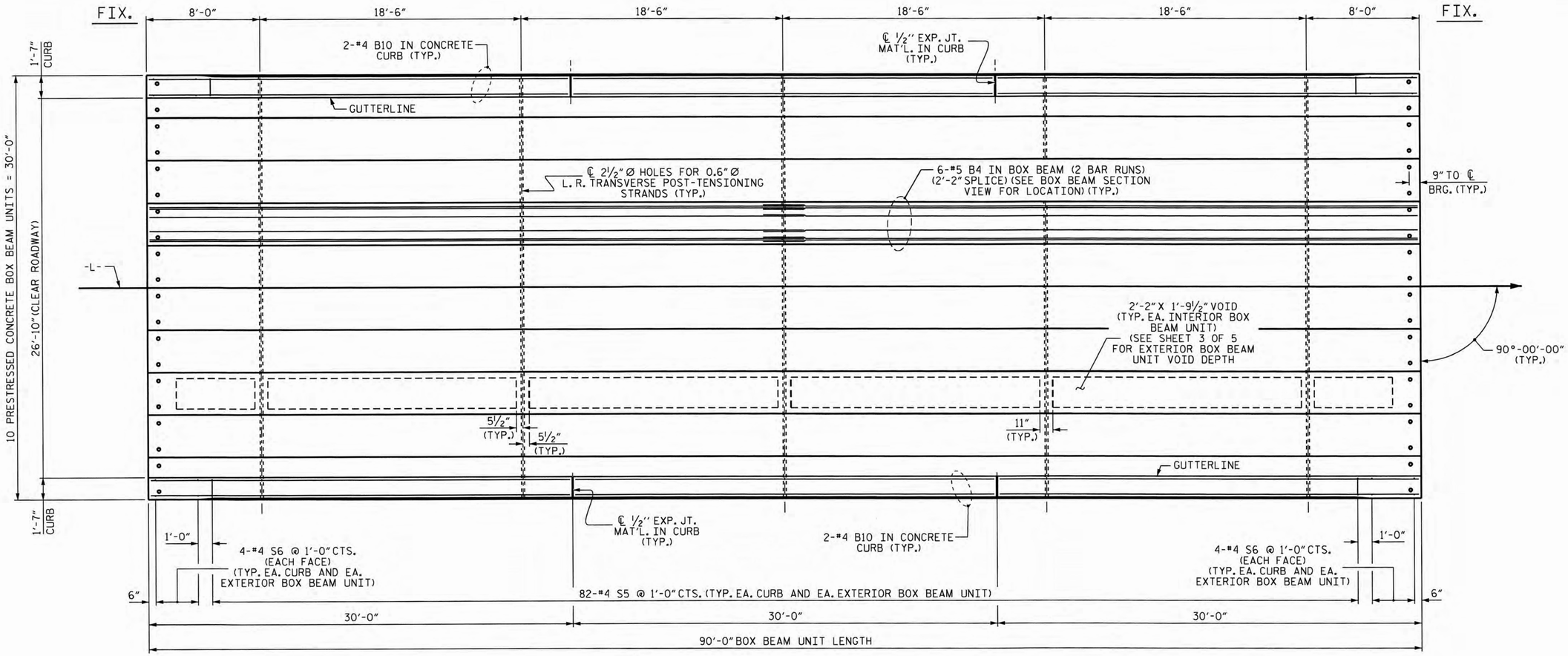

PLAN OF UNIT

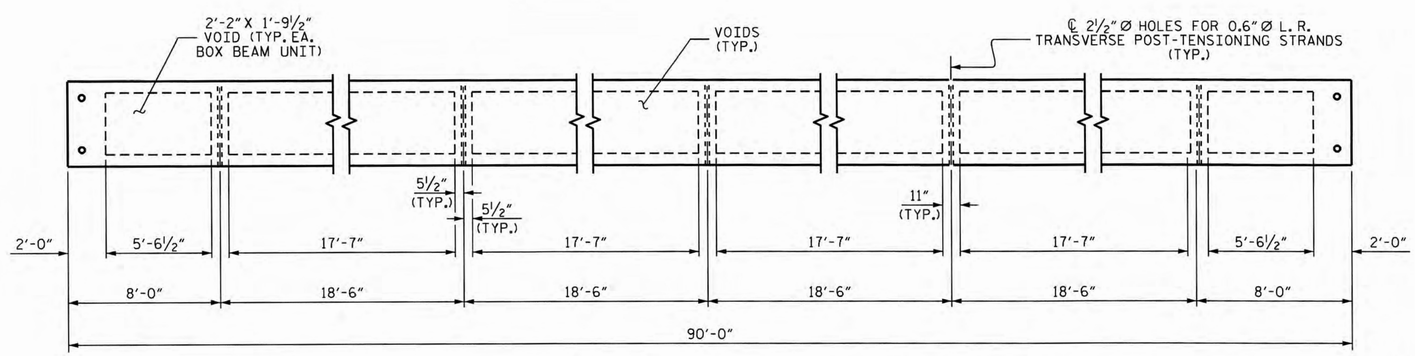

DIAPHRAGM AND VOID LAYOUT

PROJECT NO. BD-5107U

ROCKINGHAM COUNTY

STATION: 15+17.00 -L-

SHEET 2 OF 6

STATE OF NORTH CAROLINA
DEPARTMENT OF TRANSPORTATION
RALEIGH

PLAN OF 90' UNIT
27'-10" CLEAR ROADWAY
90° SKEW

NORTH CAROLINA PROFESSIONAL SEAL 14855 ENGINEER DOUGLAS R. CALHOUN
9/26/14

REVISIONS						SHEET NO.
NO.	BY:	DATE:	NO.	BY:	DATE:	S-5
1			3			TOTAL SHEETS
2			4			19

ASSEMBLED BY : A. SORSENGINH		DATE : 10/2012	
CHECKED BY : D.R. CALHOUN		DATE : 9/2014	
DRAWN BY : DGE 8/10	REV. 8/14	MAA/TMG	
CHECKED BY : TMG 11/11			

26-SEP-2014 13:22
S:\DPG2\Doug\DivisionProjects\BD-5107\BD-5107U\FinalPlans\BD5107U_SD_BX.dgn
asorsenginh

STD.NO.33PCBB_30_90S_90L

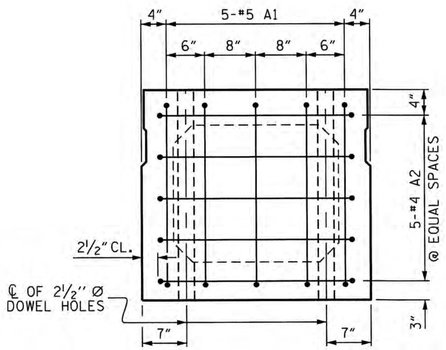

END ELEVATION

SHOWING PLACEMENT OF #5 & #4 "A" BARS AND LOCATION OF DOWEL HOLES. (INTERIOR BOX BEAM SECTION SHOWN-EXTERIOR SECTION SIMILAR EXCEPT SHEAR KEY LOCATION. STRAND LAYOUT NOT SHOWN.)

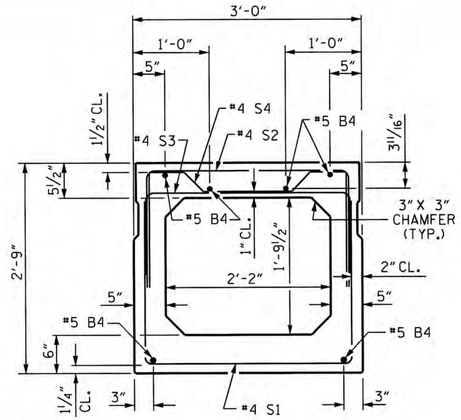

INTERIOR BOX BEAM SECTION

(STRAND LAYOUT NOT SHOWN)

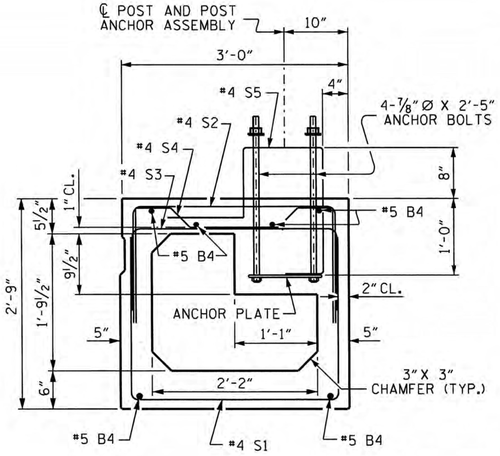

EXTERIOR BOX BEAM SECTION

(STRAND LAYOUT NOT SHOWN)

0.6" Ø LOW RELAXATION STRAND LAYOUT

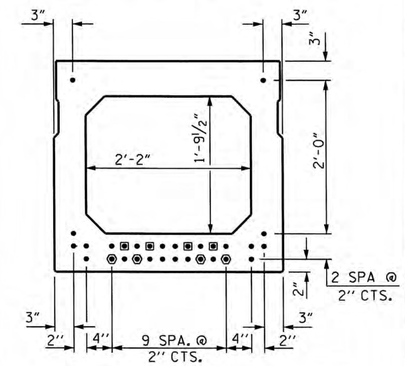

TYPICAL STRAND LOCATION

(30 STRANDS REQUIRED)

DEBONDING LEGEND

- ● FULLY BONDED STRANDS
- ▣ STRANDS DEBONDED FOR 4'-0" FROM END OF GIRDER
- ⬢ STRANDS DEBONDED FOR 12'-0" FROM END OF GIRDER

BOND SHALL BE BROKEN ON STRANDS AS SHOWN FOR THE SPECIFIED LENGTH FROM EACH END OF THE BOX BEAM. SEE STANDARD SPECIFICATIONS ARTICLE 1078-7.

BAR TYPES

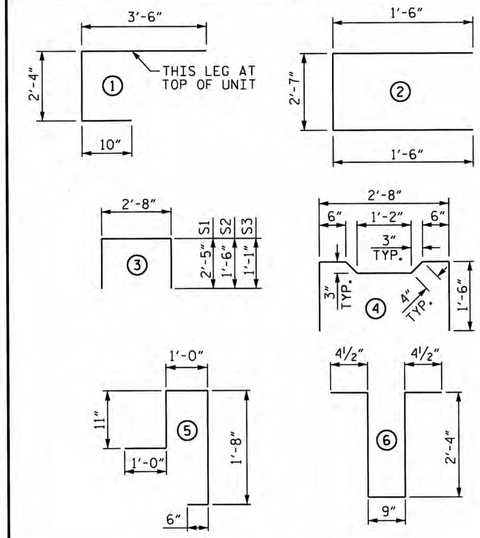

ALL BAR DIMENSIONS ARE OUT TO OUT

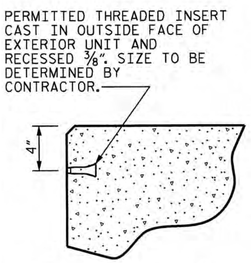

THREADED INSERT DETAIL

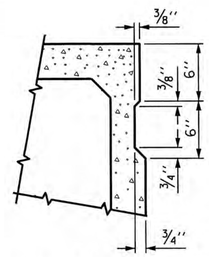

SHEAR KEY DETAIL

NOTE: OMIT SHEAR KEY ON OUTSIDE FACE OF EXTERIOR BOX BEAMS.

GRADE 270 STRANDS	
	0.6" Ø L.R.
AREA (SQUARE INCHES)	0.217
ULTIMATE STRENGTH (LBS. PER STRAND)	58,600
APPLIED PRESTRESS (LBS. PER STRAND)	43,950

SPLICE LENGTH CHART	
BAR SIZE	EPOXY COATED
#3	1'-3"
#4	1'-8"

BILL OF MATERIAL FOR ONE BOX BEAM SECTION

				EXTERIOR UNIT		INTERIOR UNIT	
BAR	NUMBER	SIZE	TYPE	LENGTH	WEIGHT	LENGTH	WEIGHT
A1	10	#5	1	6'-8"	70	6'-8"	70
A2	40	#4	2	5'-7"	149	5'-7"	149
B4	12	#5	STR	45'-11"	575	45'-11"	575
K1	15	#4	6	6'-2"	62	6'-2"	62
K2	10	#4	STR	2'-7"	17	2'-7"	17
S1	73	#4	3	7'-6"	366	7'-6"	366
S2	73	#4	3	5'-8"	276	5'-8"	276
S3	127	#4	3	4'-10"	410	4'-10"	410
S4	54	#4	4	5'-10"	210	5'-10"	210
✳ S5	82	#4	5	5'-1"	278	--	--
✳ S6	16	#4	STR	2'-8"	29	--	--
REINFORCING STEEL				2135	LBS.	2135	LBS.
✳ EPOXY COATED REINF. STEEL				307	LBS.		
7000 P.S.I. CONCRETE				18.5	CU. YDS.	15.9	CU. YDS.
0.6" Ø L.R. STRANDS				No. 30		No. 30	

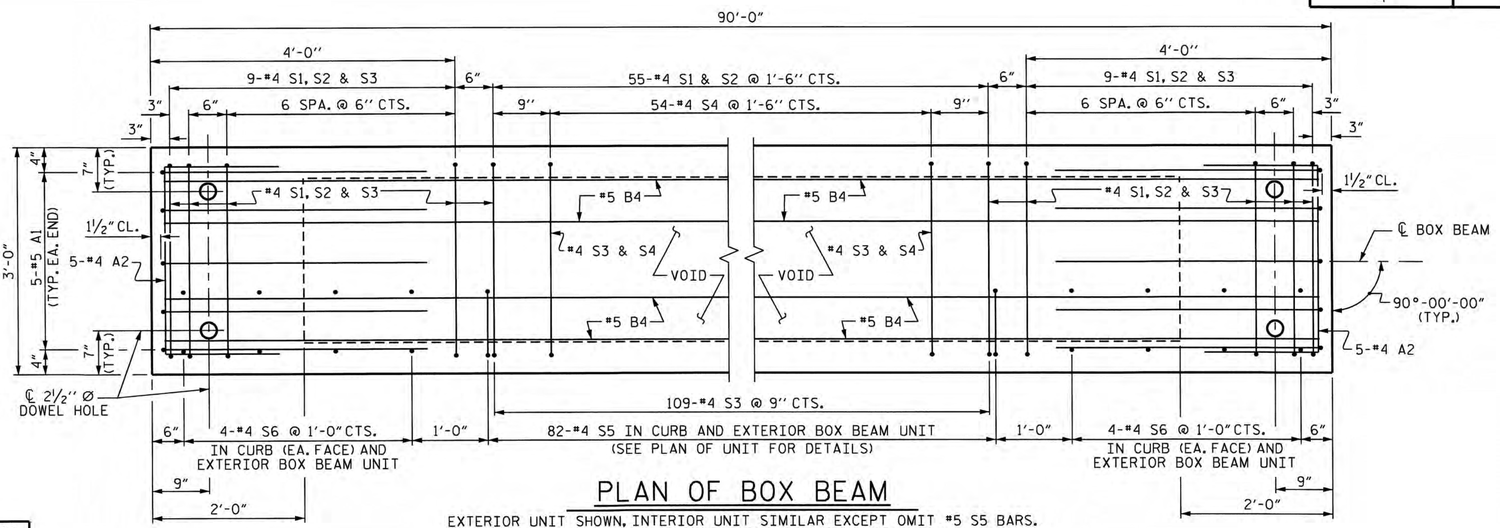

PLAN OF BOX BEAM

EXTERIOR UNIT SHOWN, INTERIOR UNIT SIMILAR EXCEPT OMIT #5 S5 BARS.
FOR LOCATION OF DIAPHRAGMS, SEE "PLAN OF UNIT".
FOR THREADED INSERTS, SEE "THREADED INSERT DETAIL".
FOR REINFORCING STEEL IN DIAPHRAGMS, SEE "DOUBLE DIAPHRAGM DETAILS".

PROJECT NO. BD-5107U
ROCKINGHAM COUNTY
STATION: 15+17.00 -L-

SHEET 3 OF 6

STATE OF NORTH CAROLINA
DEPARTMENT OF TRANSPORTATION
RALEIGH

3'-0" X 2'-9" PRESTRESSED CONCRETE BOX BEAM UNIT

NORTH CAROLINA PROFESSIONAL SEAL 14855 ENGINEER DOUGLAS R. CALHOUN
9/26/14

REVISIONS							SHEET NO.
NO.	BY:	DATE:	NO.	BY:	DATE:		S-6
1			3				TOTAL SHEETS
2			4				19

ASSEMBLED BY : A. SORSENGINH		DATE : 10/2012	
CHECKED BY : D.R. CALHOUN		DATE : 9/2014	
DRAWN BY : DGE 10/11	REV. 8/14	MAA/TMG	
CHECKED BY : TMG 11/11			

26-SEP-2014 13:22
S:\DPG2\Doug\DivisionProjects\BD-5107\BD-5107U\FinalPlans\BD5107U_SD_BX.dgn
asorsenginh

STD. NO. 33PCBB4_90S_90L

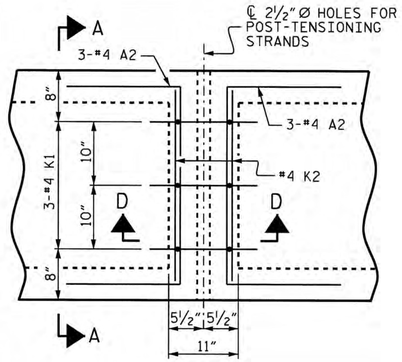

PLAN

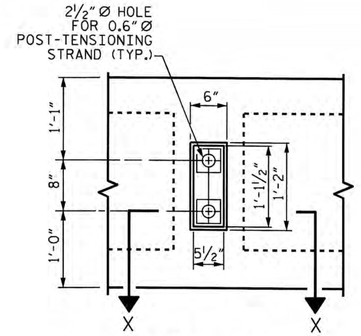

VIEW Y-Y

SHOWING ELEVATION VIEW OF GROUTED RECESS

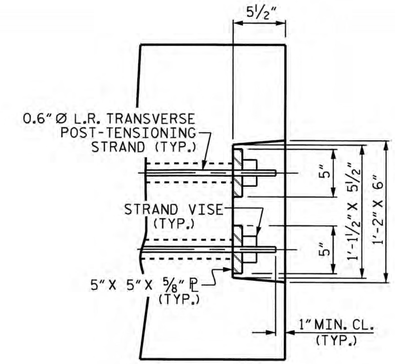

DETAIL "C"

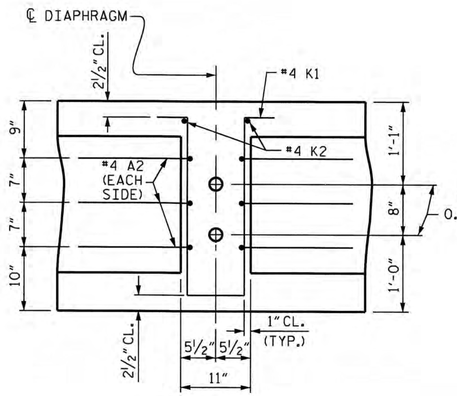

SECTION D-D

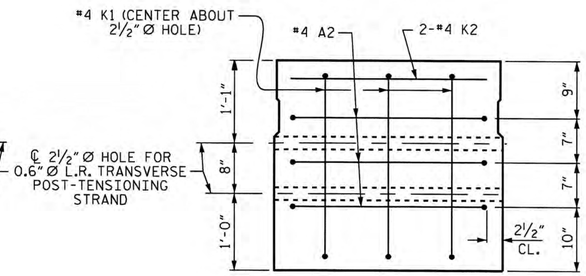

SECTION A-A

VOIDS NOT SHOWN

DOUBLE DIAPHRAGM DETAILS

#4 "S" BARS NOT SHOWN. #4 "S" BARS MAY BE SHIFTED SLIGHTLY TO CLEAR 2½" Ø HOLE.

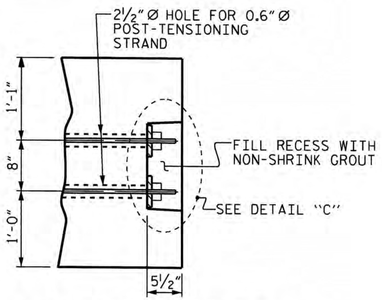

PART SECTION AT RECESS

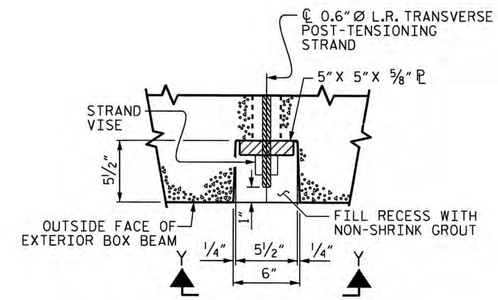

SECTION X-X

SHOWING PLAN VIEW OF GROUTED RECESS

GROUTED RECESS DETAIL AT END OF POST-TENSIONED STRANDS OF EXTERIOR BOX BEAM

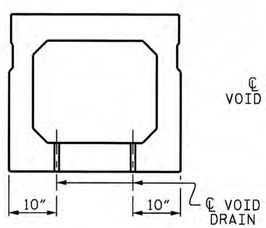

SECTION B-B

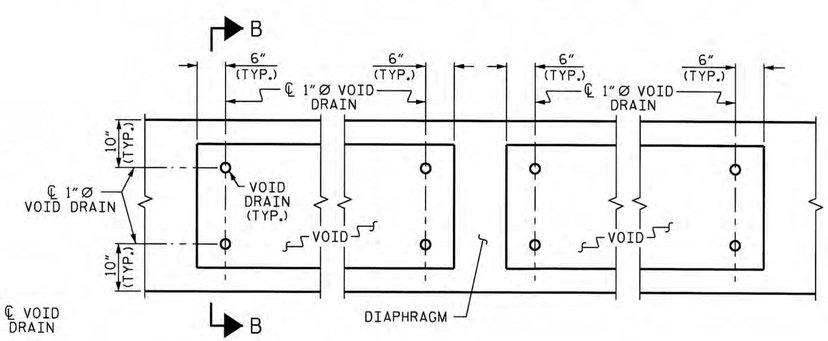

PART PLAN

VOID DRAIN DETAILS

(DIMENSIONS SHOWN ARE TYPICAL FOR EACH VOID)

PROJECT NO. BD-5107U

ROCKINGHAM COUNTY

STATION: 15+17.00 -L-

SHEET 4 OF 6

STATE OF NORTH CAROLINA
DEPARTMENT OF TRANSPORTATION
RALEIGH

STANDARD
3'-0" X 2'-9"
PRESTRESSED CONCRETE
BOX BEAM UNIT

NORTH CAROLINA PROFESSIONAL SEAL 14855 ENGINEER DOUGLAS R. CALHOUN
9/26/14

REVISIONS						SHEET NO.
NO.	BY:	DATE:	NO.	BY:	DATE:	S-7
1			3			TOTAL SHEETS
2			4			19

ASSEMBLED BY :	A. SORSENGINH	DATE :	10/2012
CHECKED BY :	D.R. CALHOUN	DATE :	9/2014
DRAWN BY :	DGE 10/11	REV. 8/14	MAA/TMG
CHECKED BY :	TMG 11/11		

26-SEP-2014 13:21
S:\DPG2\Doug\DivisionProjects\BD-5107\BD-5107U\FinalPlans\BD5107U_SD_BX.dgn
asorsenginh

STD.NO.33PCBB5_90S

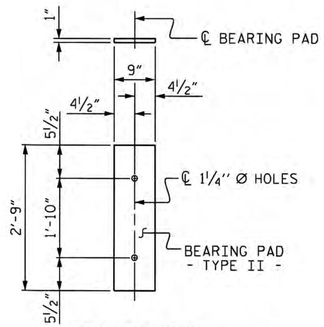

FIXED END
(TYPE II - 20 REQ'D)

ELASTOMERIC BEARING DETAILS

ELASTOMER IN ALL BEARINGS SHALL BE 60 DUROMETER HARDNESS.

GUTTERLINE ASPHALT THICKNESS & RAIL HEIGHT		
	ASPHALT OVERLAY THICKNESS @ MID-SPAN	RAIL HEIGHT @ MID-SPAN
90' UNITS	1½"	3'-7½"

BOX BEAM UNITS REQUIRED			
	NUMBER	LENGTH	TOTAL LENGTH
EXTERIOR B.B.	2	90'-0"	180'-0"
INTERIOR B.B.	8	90'-0"	720'-0"
TOTAL	10	———	900'-0"

DEAD LOAD DEFLECTION AND CAMBER	
	3'-0" x 2'-9"
90' BOX BEAM UNIT	0.6" Ø L.R. STRAND
CAMBER (SLAB ALONE IN PLACE)	2 11/16" ↑
DEFLECTION DUE TO SUPERIMPOSED DEAD LOAD**	7/8" ↓
FINAL CAMBER	1 13/16" ↑

** INCLUDES FUTURE WEARING SURFACE

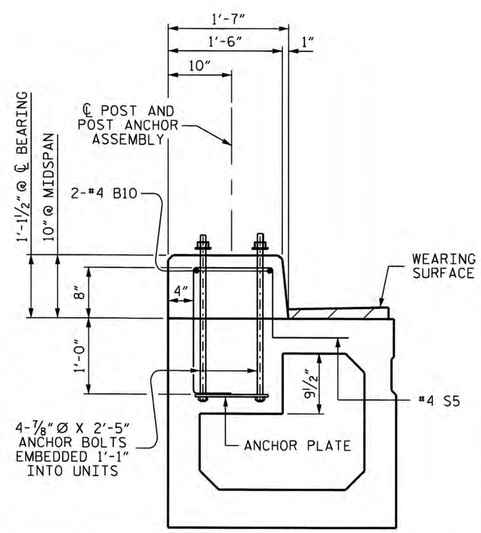

SECTION THRU CURB

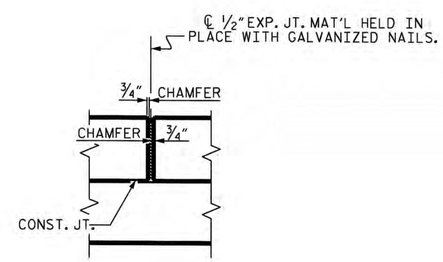

ELEVATION AT EXPANSION JOINTS

OREGON TWO TUBE METAL RAIL CURB SECTION

PROJECT NO. BD-5107U
ROCKINGHAM COUNTY
STATION: 15+17.00 -L-

SHEET 5 OF 6

STATE OF NORTH CAROLINA
DEPARTMENT OF TRANSPORTATION
RALEIGH

3'-0" X 2'-9"
PRESTRESSED CONCRETE
BOX BEAM UNIT

NORTH CAROLINA PROFESSIONAL SEAL 14855 ENGINEER DOUGLAS R. CALHOUN
8/26/14

REVISIONS						SHEET NO.
NO.	BY:	DATE:	NO.	BY:	DATE:	S-8
1			3			TOTAL SHEETS
2			4			19

ASSEMBLED BY :	A. SORSENGINH	DATE :	10/2012
CHECKED BY :	D.R. CALHOUN	DATE :	9/2014
DRAWN BY : DGE 10/11	REV. 8/14	MAA/TMG	
CHECKED BY : TMG 11/11			

26-SEP-2014 13:21
S:\DPG2\Doug\DivisionProjects\BD-5107\BD-5107U\FinalPlans\BD5107U_SD_BX.dgn
asorsenginh

STD. NO. 33PCBB8_90S

NOTES

FOR DETAILS OF CONCRETE INSERT AND GUARDRAIL ANCHOR ASSEMBLY, SEE "RAIL POST SPACINGS AND END OF RAIL DETAILS" SHEETS.

ALL REINFORCING STEEL IN CONCRETE CURB SHALL BE EPOXY COATED.

✱✱ #4 S5 AND #4 S6 BARS ARE INCLUDED IN THE BILL OF MATERIAL FOR BOX BEAM UNIT.

BILL OF MATERIAL FOR CURB AND END POSTS

BAR	TOTAL NO.	SIZE	TYPE	LENGTH	WEIGHT
✱B10	12	#4	STR	29'-7"	237
✱ E1	40	#7	STR	3'-1"	252
✱ F1	32	#6	STR	3'-5"	164
✱EPOXY COATED REINF. STEEL			LBS.		653
CLASS AA CONCRETE			CU. YDS.		12.0
CONCRETE CURB			LIN. FT.		180.00

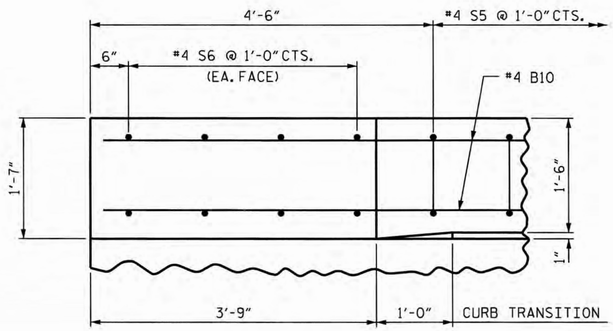

PLAN OF CURB

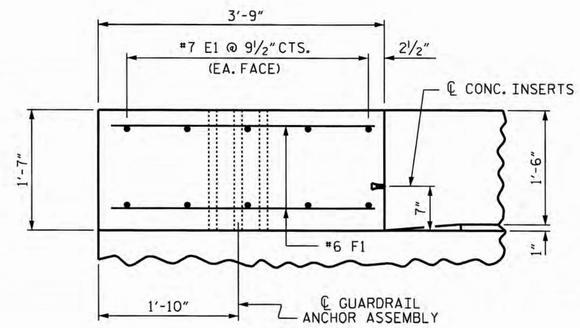

PLAN OF END POST

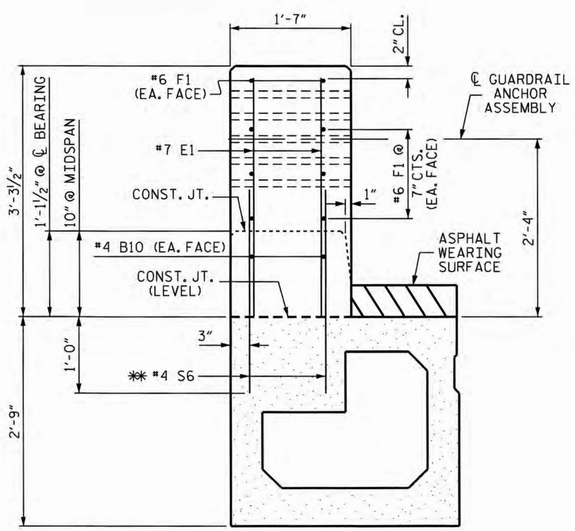

END VIEW

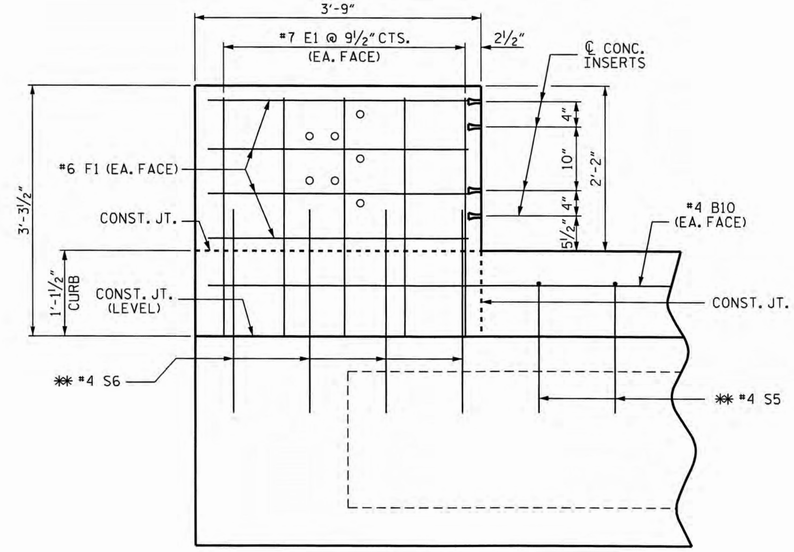

ELEVATION

CURB AND END POST FOR TWO TUBE METAL RAIL

PROJECT NO. BD-5107U

ROCKINGHAM COUNTY

STATION: 15+17.00 -L-

SHEET 6 OF 6

STATE OF NORTH CAROLINA
DEPARTMENT OF TRANSPORTATION
RALEIGH

STANDARD
3'-0" X 2'-9"
PRESTRESSED CONCRETE
BOX BEAM UNIT

NORTH CAROLINA PROFESSIONAL SEAL 14855 ENGINEER DOUGLAS R. CALHOUN
9/26/14

REVISIONS						SHEET NO.
NO.	BY:	DATE:	NO.	BY:	DATE:	S-9
1			3			TOTAL SHEETS
2			4			19

ASSEMBLED BY :	A. SORSENGINH	DATE :	10/2012
CHECKED BY :	D.R. CALHOUN	DATE :	9/2014
DRAWN BY : DGE 10/11	REV. 8/14	MAA/TMG	
CHECKED BY : TMG 11/11			

26-SEP-2014 13:21
S:\DPG2\Doug\DivisionProjects\BD-5107\BD-5107U\FinalPlans\BD5107U_SD_BX.dgn
asorsenginh

STD.NO.33PCBB5_90S

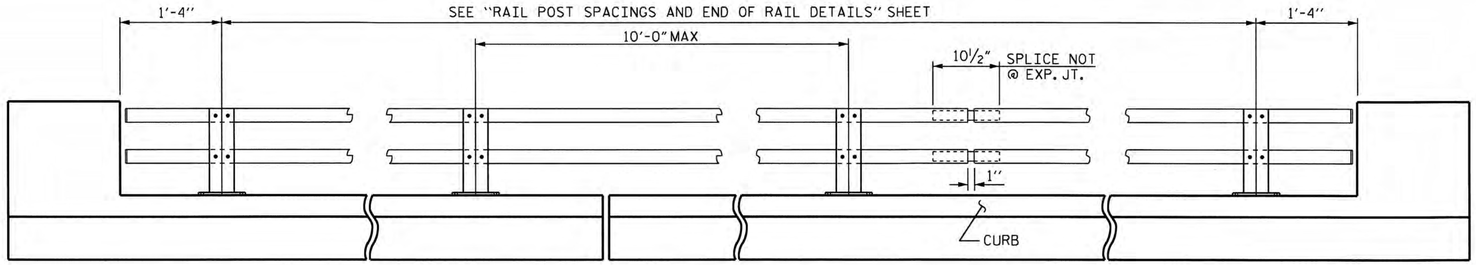

ELEVATION

NOTE : FOR ATTACHMENT OF METAL RAIL TO END POST, SEE STANDARD NO. BMR9.

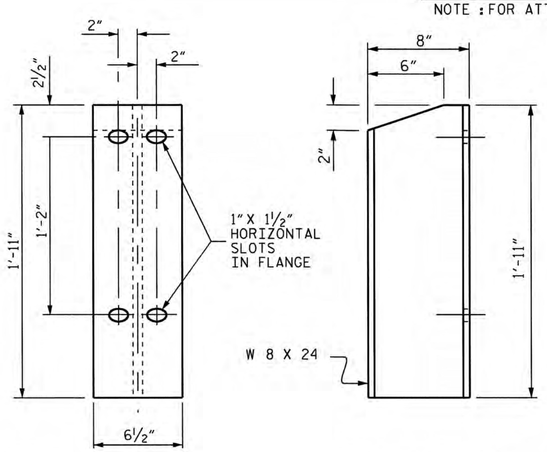

FRONT ELEVATION

SIDE ELEVATION

DETAILS OF POST

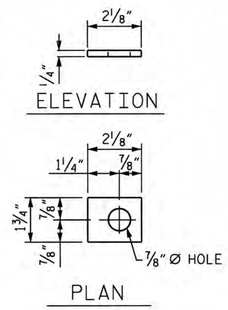

PLATE WASHER

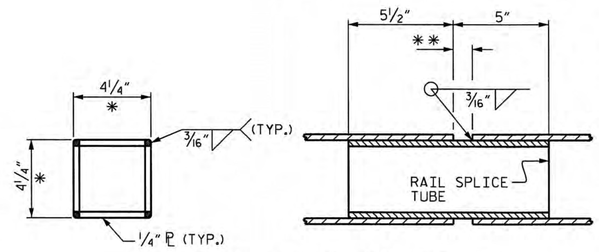

RAIL SPLICE DETAILS

* - DIMENSION AFTER GRINDING RADIUS ON CORNERS TO MATCH INSIDE OF METAL RAIL. GRIND ALL EDGES PRIOR TO GALVANIZING TO ASSURE FIT.

** - 1" FOR SPLICE NOT AT EXPANSION JOINT.

NOTES

METAL RAIL SHALL BE GALVANIZED STEEL IN ACCORDANCE WITH THE REQUIREMENTS OF THE GENERAL NOTES AND THE FOLLOWING SPECIFICATIONS.

GALVANIZED STEEL RAILS

MATERIAL AND GALVANIZING ARE TO CONFORM TO THE FOLLOWING SPECIFICATIONS:

POST, POST BASES, ANCHOR PLATES AND RAIL SPLICE TUBES: AASHTO M270 GRADE 36 STRUCTURAL STEEL-GALVANIZED TO AASHTO M111.

THE CUT ENDS OF GALVANIZED STEEL RAILING, AFTER GRINDING SMOOTH SHALL BE GIVEN TWO COATS OF ZINC RICH PAINT MEETING THE REQUIREMENTS OF FEDERAL SPECIFICATION MIL-P-26915 USAF TYPE 1, OR OF FEDERAL SPECIFICATIONS TT-P-641.

RAILS: ASTM A500 GRADE B, A501 OR A618 - GALVANIZED TO AASHTO M111. ALUMINUM WILL NOT BE ALLOWED.

REDUCED BASE WELDED STUDS: ASTM A108-GALVANIZED TO AASHTO M111.

HIGH STRENGTH ANCHOR BOLTS SHALL CONFORM TO ASTM 1554 GRADE 105. HEAVY HEX NUTS SHALL CONFORM TO ASTM A563 DH, AND WASHERS TO ASTM F436, TYPE 1. NUTS AND WASHERS SHALL BE GALVANIZED TO AASHTO M111.

GENERAL NOTES

RAILING SHALL BE CONTINUOUS FROM END POST TO END POST OF BRIDGE. EACH JOINT IN RAIL LENGTH SHALL BE SPLICED AS DETAILED. PANEL LENGTHS OF RAIL SHALL BE ATTACHED TO A MINIMUM OF THREE POSTS.

FOR END OF RAIL TO CLEAR FACE OF CONCRETE END POST DIMENSION, SEE STANDARD NO. BMR9.

CERTIFIED MILL REPORTS ARE REQUIRED FOR RAILS AND POSTS. SHOP INSPECTION IS NOT REQUIRED.

METAL RAIL POSTS SHALL BE SET NORMAL TO CURB GRADE.

METHOD OF MEASUREMENT FOR METAL RAILS: FOR LENGTH OF METAL RAILS TO BE PAID FOR, SEE THE STANDARD SPECIFICATIONS.

CURVED RAIL USAGE: WHERE RAILS ARE TO BE USED ON BRIDGES ON HORIZONTAL AND/OR VERTICAL CURVATURE THE CONTRACTOR MAY, AT HIS OPTION, HAVE THE REQUIRED CURVATURE IN THE RAIL FORMED IN THE SHOP OR IN THE FIELD. IN EITHER EVENT, THE RAIL SHALL CONFORM WITHOUT BUCKLING OR KINKING TO THE REQUIRED CURVATURE IN A UNIFORM MANNER ACCEPTABLE TO THE ENGINEER.

TO INSURE FUTURE IDENTIFICATION OF THE FABRICATOR, A PERMANENT IDENTIFYING MARK SHALL BE PLACED ON EACH POST. THE METHOD OF MARKING AND LOCATION SHALL BE SUCH THAT IT DOES NOT DETRACT FROM THE APPEARANCE OF THE POST, BUT REMAINS VISIBLE AFTER RAIL PLACEMENT.

SHIMS SHALL BE USED AS NECESSARY FOR POST ALIGNMENT.

MINOR VARIATIONS IN DETAILS OF METAL RAIL WILL BE CONSIDERED. DETAILS OF SUCH VARIATIONS, IF DESIRED, SHALL BE SUBMITTED FOR APPROVAL.

GROOVED CONTRACTION JOINTS, ½" IN DEPTH, SHALL BE TOOLED IN ALL EXPOSED FACES OF THE CURB AND IN ACCORDANCE WITH ARTICLE 825-10(B) OF THE STANDARD SPECIFICATIONS. A CONTRACTION JOINT SHALL BE LOCATED AT EACH THIRD POINT BETWEEN CURB EXPANSION JOINTS. ONLY ONE CONTRACTION JOINT IS REQUIRED AT MIDPOINT OF CURB SEGMENTS LESS THAN 20 FEET IN LENGTH AND NO CONTRACTION JOINTS ARE REQUIRED FOR THOSE SEGMENTS LESS THAN 10 FEET IN LENGTH.

THE RAIL SECTIONS SHALL BE ATTACHED TO THE POSTS BY TWO THREADED ¾" Ø WELDED STUDS, PLATE WASHERS, LOCKWASHERS, AND NUTS.

PAY LENGTH 165.00 LIN. FT.

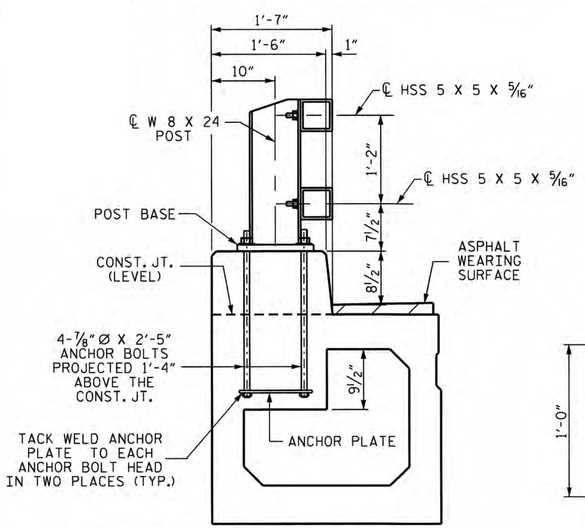

SECTION THRU RAIL

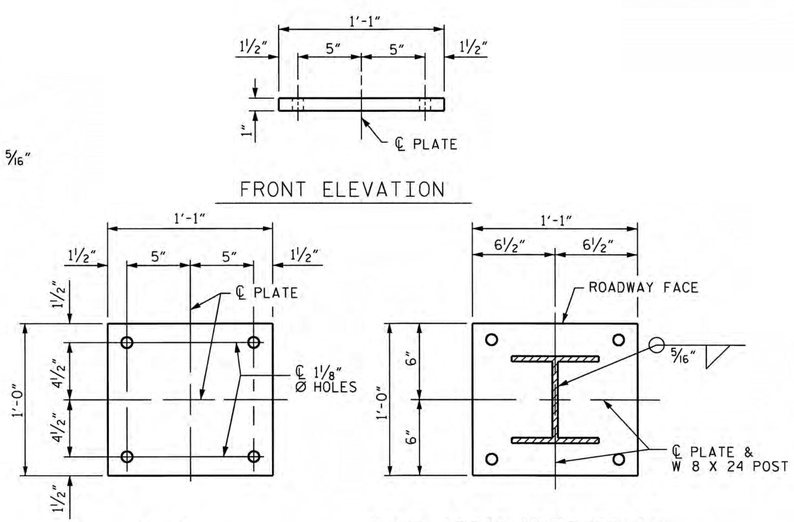

POST BASE DETAILS

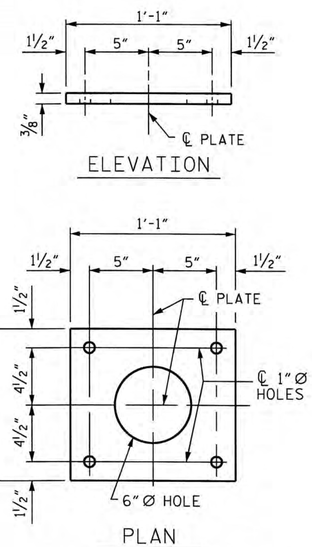

ANCHOR PLATE DETAILS

PROJECT NO. BD-5107U

ROCKINGHAM COUNTY

STATION: 15+17.00 -L-

SHEET 1 OF 2

STATE OF NORTH CAROLINA
DEPARTMENT OF TRANSPORTATION
RALEIGH

STANDARD

OREGON
2 TUBE METAL RAIL

NORTH CAROLINA PROFESSIONAL SEAL 14855 ENGINEER DOUGLAS R. CALHOUN
9/26/14

REVISIONS							SHEET NO.
NO.	BY:	DATE:	NO.	BY:	DATE:		S-10
1			3				TOTAL SHEETS
2			4				19

ASSEMBLED BY :	A. SORSENGINH	DATE :	9/2014
CHECKED BY :	D.R. CALHOUN	DATE :	9/2014
DRAWN BY :	RWW 7/14		
CHECKED BY :	TMG 7/14		

26-SEP-2014 13:20
S:\DPG2\Doug\DivisionProjects\BD-5107\BD-5107U\FinalPlans\BD5107U_SD_2TMR.dgn
asorsenginh

STD. NO. BMR8

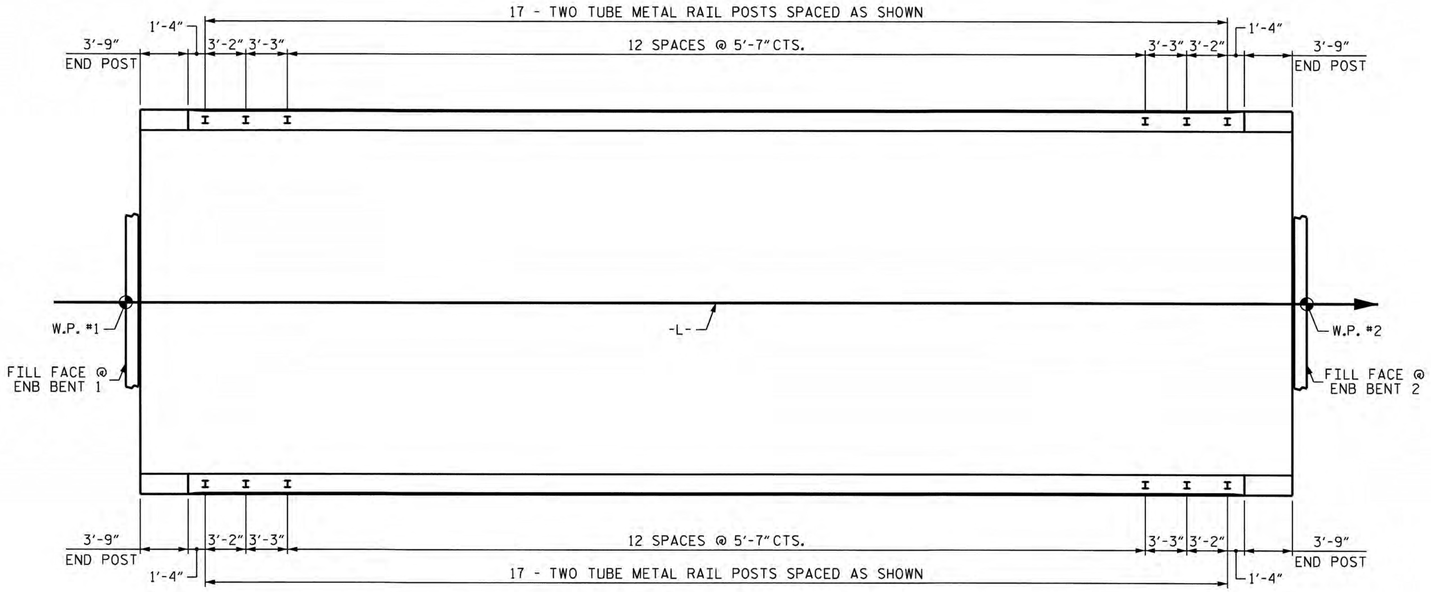

PLAN OF RAIL POST SPACINGS

NOTES

STRUCTURAL CONCRETE INSERT

EACH STRUCTURAL CONCRETE INSERT ASSEMBLY SHALL CONSIST OF THE FOLLOWING COMPONENTS:

A. FERRULE SHALL BE MADE FROM STEEL MEETING THE REQUIREMENTS OF AASHTO M169, GRADE 12L14 AND SHALL HAVE A MINIMUM LENGTH OF THREADS OF 1½".

B. 1 - ¾" Ø X 1⅝" BOLT WITH WASHER. BOLT SHALL CONFORM TO THE REQUIREMENTS OF ASTM A307. BOLT AND WASHER SHALL BE GALVANIZED. (AT THE CONTRACTOR'S OPTION, STAINLESS STEEL BOLT AND WASHER MAY BE USED AS AN ALTERNATE FOR THE ¾" Ø X 1⅝" GALVANIZED BOLT AND WASHER. THEY SHALL CONFORM TO OR EXCEED THE MECHANICAL REQUIREMENTS OF ASTM A307. THE USE OF THIS ALTERNATE SHALL BE APPROVED BY THE ENGINEER.)

C. WIRE STRUT SHOWN IN THE STRUCTURAL CONCRETE INSERT DETAIL IS THE MINIMUM ALLOWABLE SIZE AND SHALL HAVE A MINIMUM TENSILE STRENGTH OF 100,000 PSI. AS AN OPTION, A 7/16" Ø WIRE STRUT WITH A MINIMUM TENSILE STRENGTH OF 90,000 PSI IS ACCEPTABLE.

NOTES

METAL RAIL TO END POST CONNECTION

EACH METAL RAIL TO END POST CONNECTION SHALL CONSIST OF THE FOLLOWING COMPONENTS:

A. ½" METAL BRACKET PLATE AND ¼" METAL RAIL INSERT TUBE SHALL CONFORM TO AASHTO M270 GRADE 36 AND SHALL BE GALVANIZED AFTER FABRICATION.

B. ¾" STRUCTURAL CONCRETE INSERTS SHALL HAVE A WORKING LOAD SHEAR CAPACITY OF 4800 LBS. THE FERRULES SHALL ENGAGE A ¾"Ø X 1⅝" BOLT WITH 2" O.D. WASHER IN PLACE. THE ¾"Ø X 1⅝" BOLT SHALL HAVE N.C. THREADS.

THE ¾" STRUCTURAL CONCRETE INSERTS WITH BOLTS SHALL BE ASSEMBLED IN THE SHOP.

THE COST OF THE ¾" STRUCTURAL CONCRETE INSERT ASSEMBLIES, THE ½" BRACKET PLATES, AND THE RAIL INSERT TUBES COMPLETE IN PLACE SHALL BE INCLUDED IN THE VARIOUS PAY ITEMS.

THE CONTRACTOR, AT HIS OPTION, MAY USE AN ADHESIVE BONDING SYSTEM IN LIEU OF THE STRUCTURAL CONCRETE INSERT EMBEDDED IN THE END POST. IF THE ADHESIVE BONDING SYSTEM IS USED, THE ¾" Ø X 1⅝" BOLTS WITH WASHERS SHALL BE REPLACED WITH ¾" Ø X 6½" BOLTS AND 2" O.D. WASHERS. ALL SPECIFICATIONS THAT APPLY TO THE ¾" Ø X 1⅝" BOLTS SHALL APPLY TO THE ¾" Ø X 6½" BOLTS. FIELD TESTING OF THE ADHESIVE BONDING SYSTEM IS NOT REQUIRED.

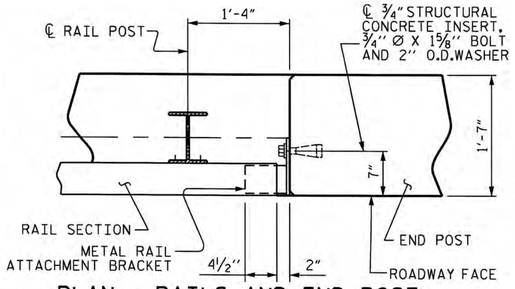

PLAN - RAILS AND END POST

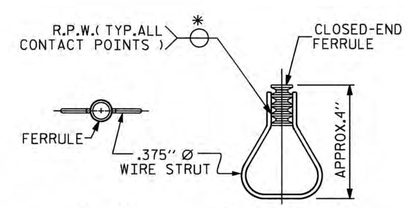

STRUCTURAL CONCRETE INSERT

* EACH WELDED ATTACHMENT OF WIRE TO FERRULE SHALL DEVELOP THE TENSILE STRENGTH OF THE WIRE.

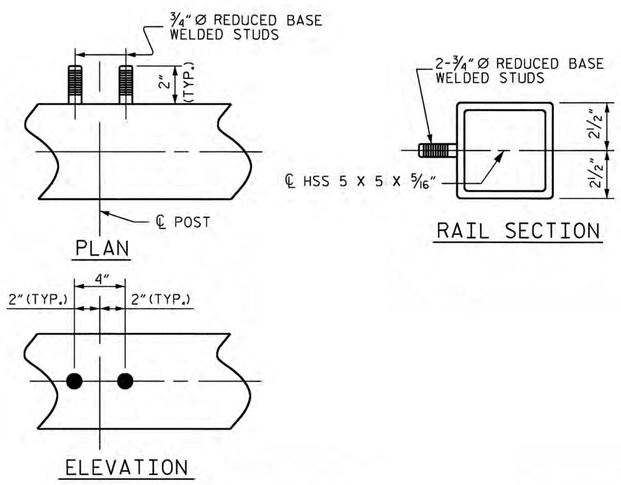

RAIL STUD DETAILS

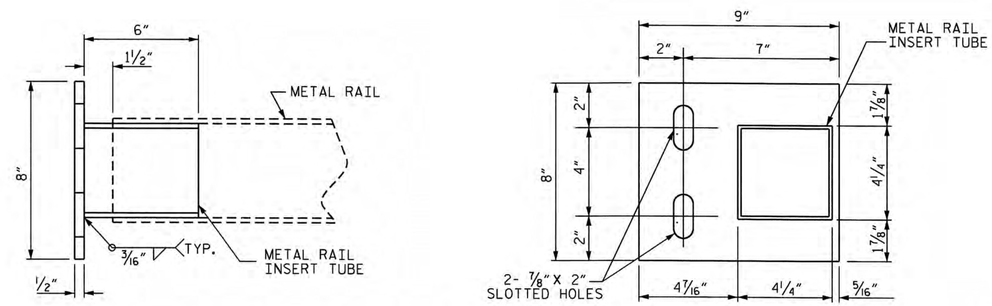

METAL RAIL ATTACHMENT BRACKET

THE METAL RAIL INSERT TUBE SHALL BE FABRICATED FROM ¼" PLATES.

PROJECT NO. BD-5107U

ROCKINGHAM COUNTY

STATION: 15+17.00 -L-

SHEET 2 OF 2

STATE OF NORTH CAROLINA
DEPARTMENT OF TRANSPORTATION
RALEIGH

STANDARD

RAIL POST SPACINGS AND END OF RAIL DETAILS

FOR OREGON TWO TUBE METAL RAIL

NORTH CAROLINA PROFESSIONAL SEAL 14855 ENGINEER DOUGLAS R. CALHOUN
9/26/14

REVISIONS						SHEET NO.
NO.	BY:	DATE:	NO.	BY:	DATE:	S-11
1			3			TOTAL SHEETS
2			4			19

ASSEMBLED BY :	A. SORSENGINH	DATE :	9/2014
CHECKED BY :	D.R. CALHOUN	DATE :	9/2014
DRAWN BY :	RWW	7/14	
CHECKED BY :	TMG	7/14	

26-SEP-2014 13:20
S:\DPG2\Doug\DivisionProjects\BD-5107\BD-5107U\FinalPlans\BD5107U_SD_2TMR.dgn
asorsenginh

STD. NO. BMR9

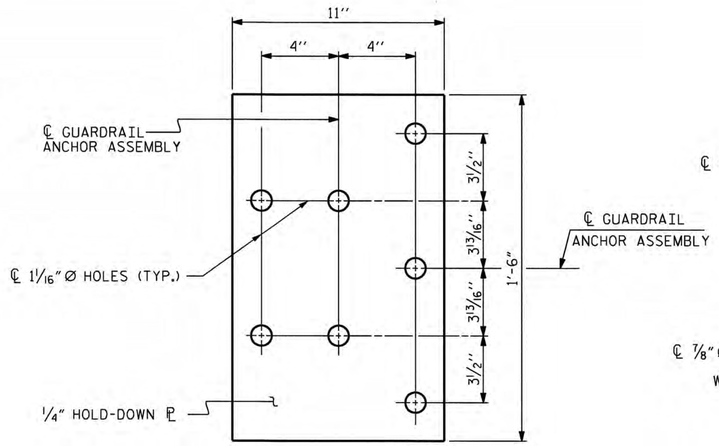

PLAN

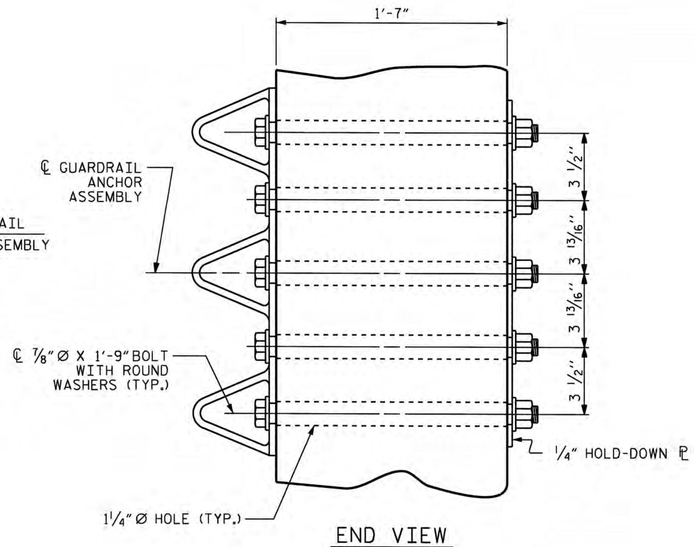

END VIEW

GUARDRAIL ANCHOR ASSEMBLY DETAILS

NOTES

THE GUARDRAIL ANCHOR ASSEMBLY SHALL CONSIST OF A 1/4'' HOLD DOWN PLATE AND 7 - 7/8'' Ø BOLTS WITH NUTS AND WASHERS.

THE HOLD-DOWN PLATE SHALL CONFORM TO AASHTO M270 GRADE 36. AFTER FABRICATION, THE HOLD-DOWN PLATE SHALL BE HOT-DIP GALVANIZED IN ACCORDANCE WITH AASHTO M111.

BOLTS SHALL CONFORM TO THE REQUIREMENTS OF ASTM A307 AND NUTS SHALL CONFORM TO THE REQUIREMENTS OF AASHTO M291. BOLTS, NUTS AND WASHERS SHALL BE GALVANIZED. (AT THE CONTRACTOR'S OPTION, STAINLESS STEEL BOLTS, NUTS AND WASHERS MAY BE USED AS AN ALTERNATE FOR THE 7/8'' Ø GALVANIZED BOLTS, NUTS AND WASHERS. THEY SHALL CONFORM TO OR EXCEED THE MECHANICAL REQUIREMENTS OF ASTM A307. THE USE OF THIS ALTERNATE SHALL BE APPROVED BY THE ENGINEER.)

THE GUARDRAIL ANCHOR ASSEMBLY IS REQUIRED AT ALL POINTS WHERE APPROACH GUARDRAIL IS TO BE ATTACHED TO THE END POST. FOR POINTS OF ATTACHMENT, SEE SKETCH.

AFTER INSTALLATION, THE EXPOSED THREAD OF THE BOLT SHALL BE BURRED WITH A SHARP POINTED TOOL.

THE COST OF THE GUARDRAIL ANCHOR ASSEMBLIES WITH BOLTS, NUTS, AND WASHERS COMPLETE IN PLACE, SHALL BE INCLUDED IN THE VARIOUS PAY ITEMS.

THE VERTICAL REINFORCING BARS MAY BE SHIFTED SLIGHTLY IN THE END POST TO CLEAR ASSEMBLY BOLTS.

THE 1 1/4'' Ø HOLES SHALL BE FORMED OR DRILLED WITH A CORE BIT. IMPACT TOOLS WILL NOT BE PERMITTED. ANY CONCRETE DAMAGED BY THIS WORK SHALL BE REPAIRED TO THE SATISFACTION OF THE ENGINEER.

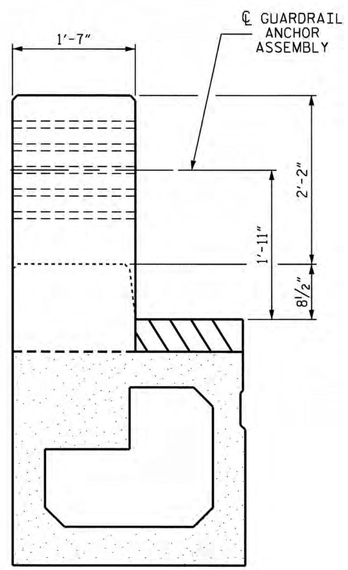

END VIEW

LOCATION OF GUARDRAIL ANCHOR AT END POST

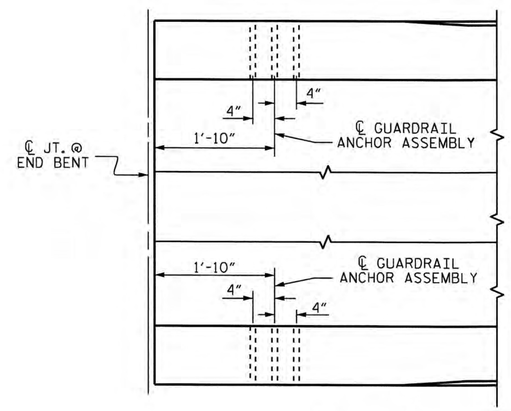

PLAN

LOCATION OF ANCHORS FOR GUARDRAIL

END BENT #1 SHOWN, END BENT #2 SIMILAR.

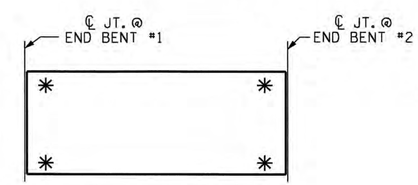

SKETCH SHOWING POINTS OF ATTACHMENT

✳ DENOTES GUARDRAIL ANCHOR ASSEMBLY

PROJECT NO. BD-5107U
ROCKINGHAM COUNTY
STATION: 15+17.00 -L-

STATE OF NORTH CAROLINA
DEPARTMENT OF TRANSPORTATION
RALEIGH

STANDARD

GUARDRAIL ANCHORAGE FOR OREGON RAIL

NORTH CAROLINA PROFESSIONAL SEAL 14855 ENGINEER DOUGLAS R. CALHOUN
Douglas R. Calhoun 6/26/14

REVISIONS						SHEET NO.
NO.	BY:	DATE:	NO.	BY:	DATE:	S-12
1			3			TOTAL SHEETS
2			4			19

STD. NO. GRA3

ASSEMBLED BY :	ASORSENGINH	DATE :	10/2012
CHECKED BY :	D.R. CALHOUN	DATE :	9/2014
DRAWN BY : MAA 5/10	ADDED 5/6/10		
CHECKED BY : GM 5/10	REV. 10/1/11	MAA/GM	
	REV. 12/5/11	MAA/GM	

26-SEP-2014 13:19
S:\DPG2\Doug\DivisionProjects\BD-5107\BD-5107U\FinalPlans\BD5107U_SD_GR.dgn
asorsenginh

NOTES

STIRRUPS IN CAP MAY BE SHIFTED AS NECESSARY TO CLEAR DOWELS.

FOR PILE SPLICE DETAILS, SEE SHEET 4 OF 5.

FOR WING DETAILS, SEE SHEET 3 OF 5.

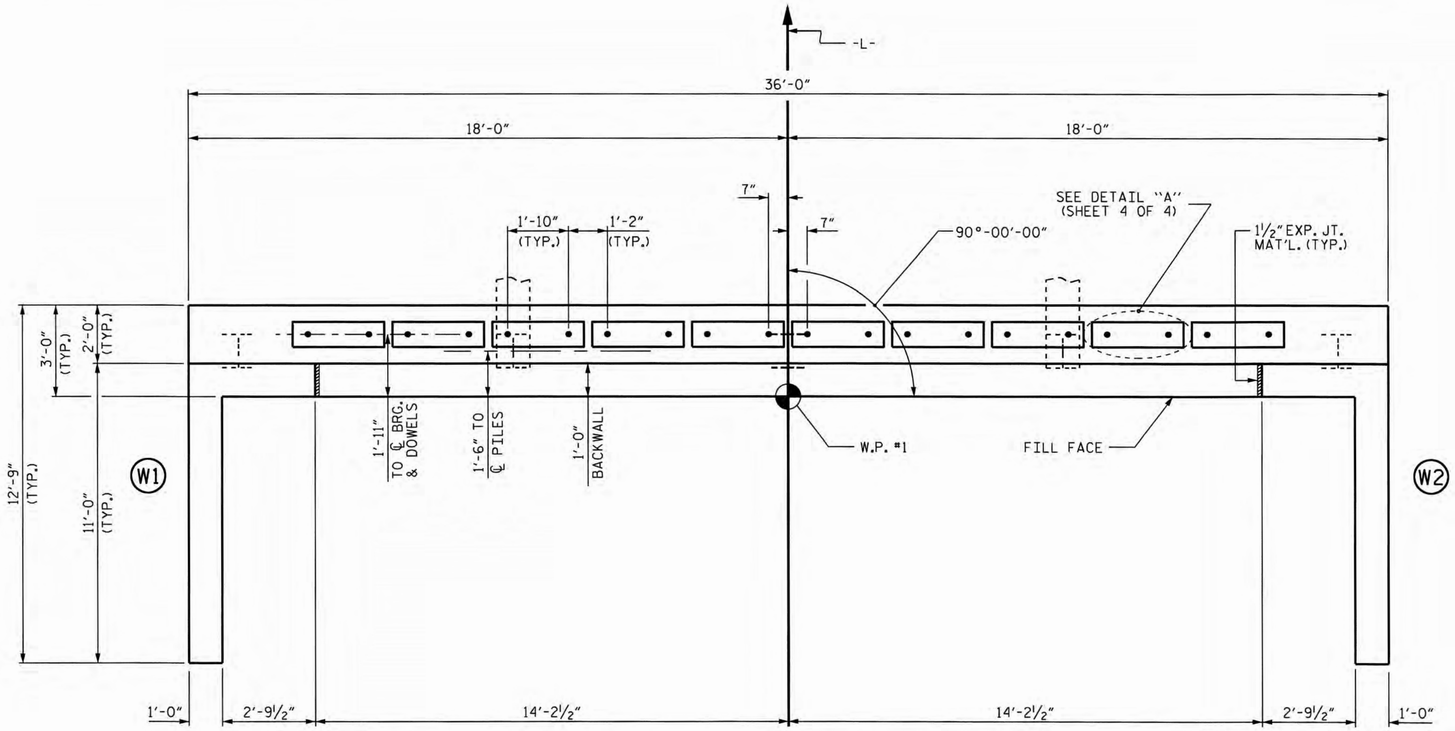

PLAN

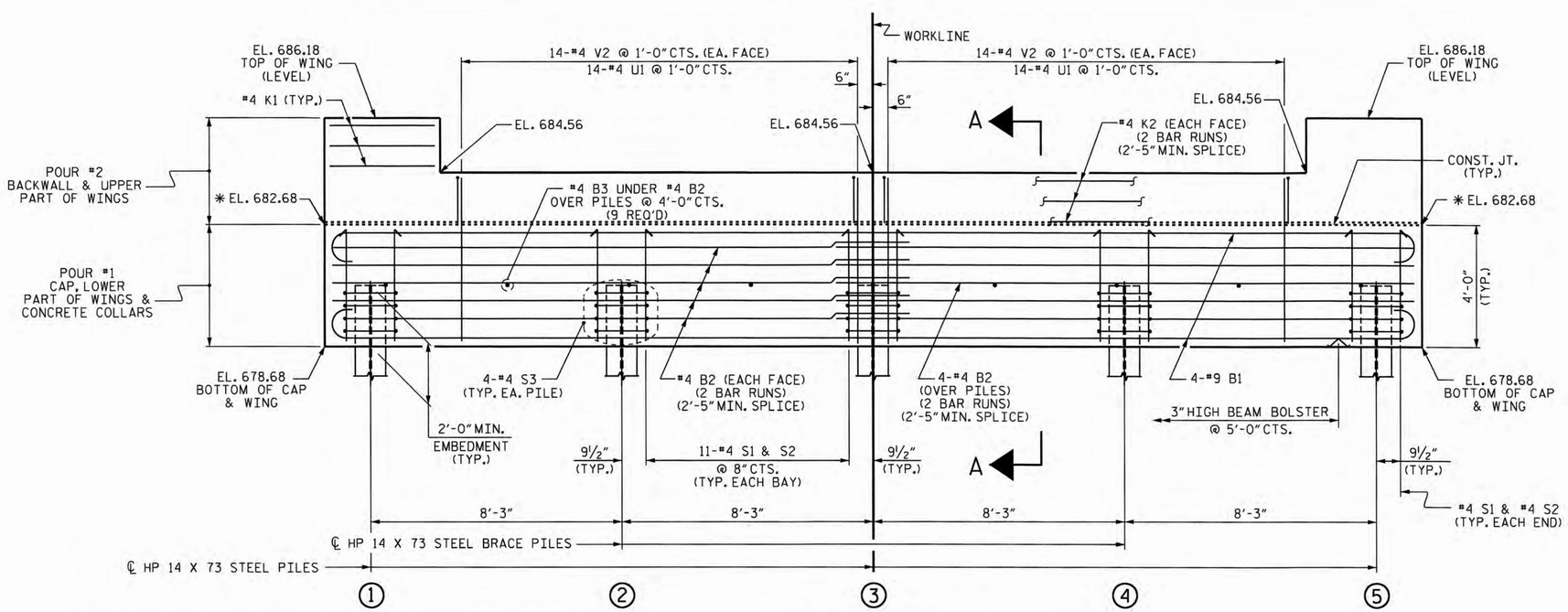

ELEVATION

WINGS NOT SHOWN FOR CLARITY.
FOR SECTION A-A, SEE SHEET 4 OF 4.
CONCRETE COLLARS FOR STEEL PILES NOT SHOWN IN PLAN AND ELEVATION VIEWS FOR CLARITY.
SEE "CORROSION PROTECTION FOR STEEL PILES DETAIL", SHEET 4 OF 4.

* SEE SECTION A-A ON SHEET 4 OF 5 FOR TOP OF CAP ELEVATION LOCATION

PROJECT NO. BD-5107U
ROCKINGHAM COUNTY
STATION: 15+17.00 -L-

SHEET 1 OF 5

STATE OF NORTH CAROLINA
DEPARTMENT OF TRANSPORTATION
RALEIGH

SUBSTRUCTURE

END BENT 1

NORTH CAROLINA PROFESSIONAL SEAL 14855 ENGINEER DOUGLAS R. CALHOUN
8/26/14

ASSEMBLED BY : A. SORSENGINH	DATE : 10/2012
CHECKED BY : D.G. ELY	DATE : 11/2012
DRAWN BY : WJH 12/11	
CHECKED BY : AAC 12/11	

REVISIONS						SHEET NO.
NO.	BY:	DATE:	NO.	BY:	DATE:	S-13
1			3			TOTAL SHEETS
2			4			19

26-SEP-2014 13:18
S:\DPG2\Doug\DivisionProjects\BD-5107\BD-5107U\Final Plans\BD5107U_SD_E*.dgn
asorsenginh

STD. NO. EB_30_90S4_33BB

NOTES

STIRRUPS IN CAP MAY BE SHIFTED AS NECESSARY TO CLEAR DOWELS.

FOR PILE SPLICE DETAILS, SEE SHEET 5 OF 5.

FOR WING DETAILS, SEE SHEET 3 OF 5.

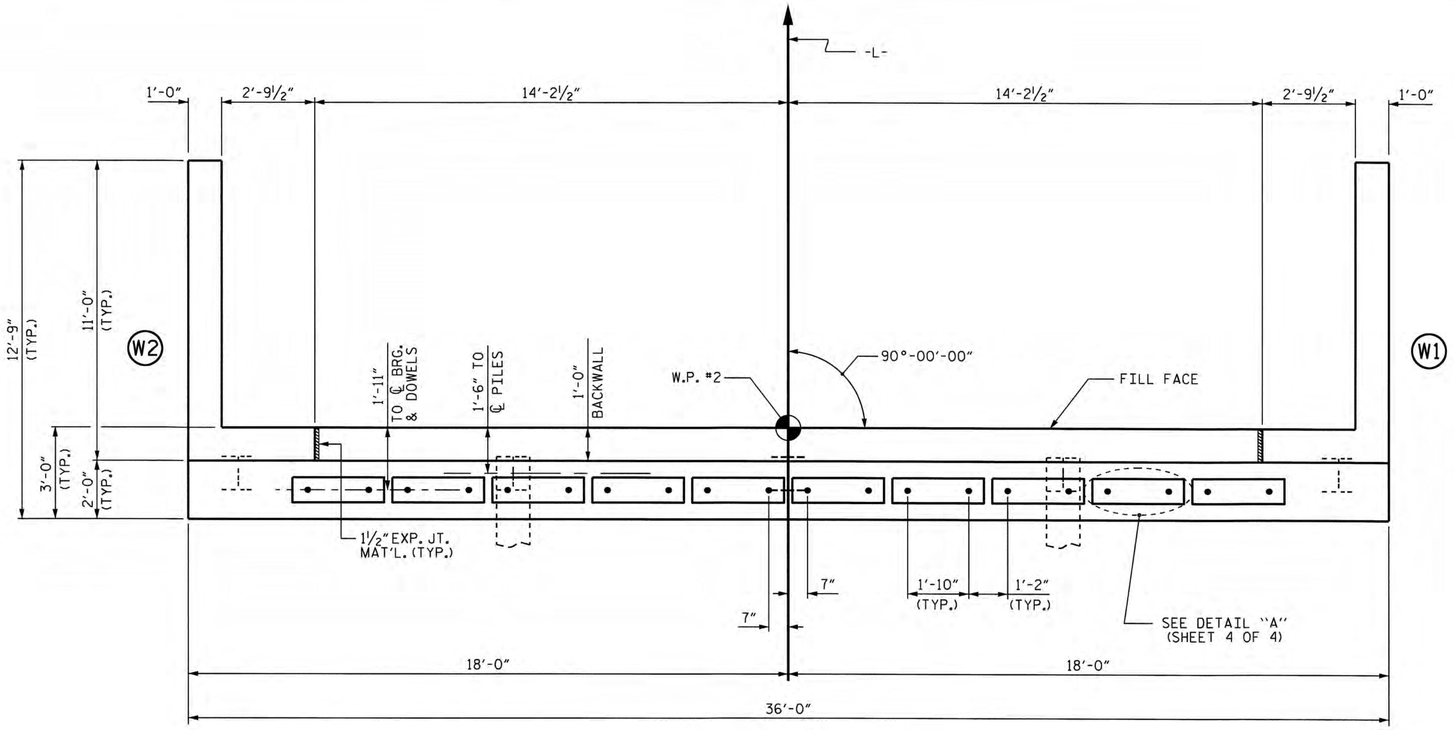

PLAN

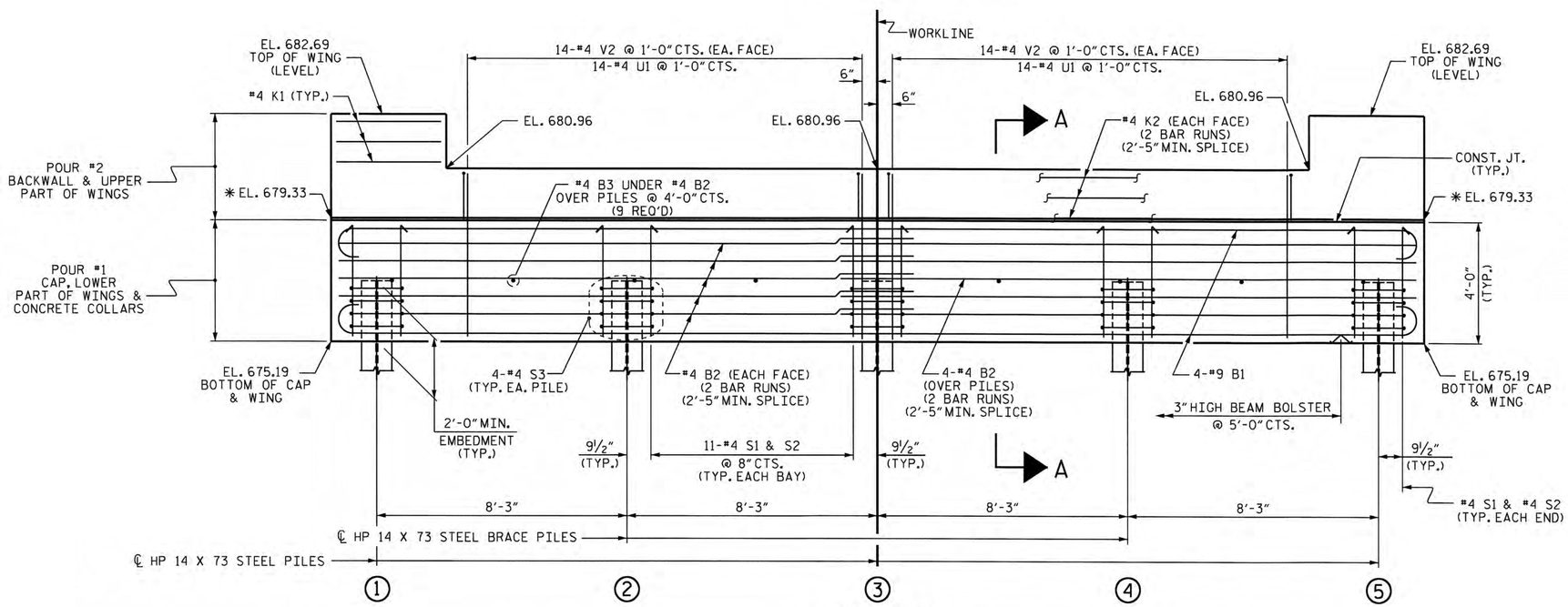

ELEVATION

WINGS NOT SHOWN FOR CLARITY.
FOR SECTION A-A, SEE SHEET 4 OF 4.
CONCRETE COLLARS FOR STEEL PILES NOT SHOWN IN PLAN AND ELEVATION VIEWS FOR CLARITY.
SEE "CORROSION PROTECTION FOR STEEL PILES DETAIL", SHEET 4 OF 4.

✱ SEE SECTION A-A ON SHEET 5 OF 5 FOR TOP OF CAP ELEVATION LOCATION

PROJECT NO. BD-5107U
ROCKINGHAM COUNTY
STATION: 15+17.00 -L-

SHEET 2 OF 5

STATE OF NORTH CAROLINA
DEPARTMENT OF TRANSPORTATION
RALEIGH

SUBSTRUCTURE

END BENT 2

NORTH CAROLINA PROFESSIONAL SEAL 14855 ENGINEER DOUGLAS R. CALHOUN
9/26/14

REVISIONS						SHEET NO.
NO.	BY:	DATE:	NO.	BY:	DATE:	S-14
1			3			TOTAL SHEETS
2			4			19

ASSEMBLED BY :	A. SORSENGINH	DATE :	10/2012
CHECKED BY :	D.G. ELY	DATE :	11/2012
DRAWN BY :	WJH	12/11	
CHECKED BY :	AAC	12/11	

26-SEP-2014 13:17
S:\DPG2\Doug\DivisionProjects\BD-5107\BD-5107U\FinalPlans\BD5107U_SD_E*.dgn
asorsenginh

STD. NO. EB_30_90S4_33BB

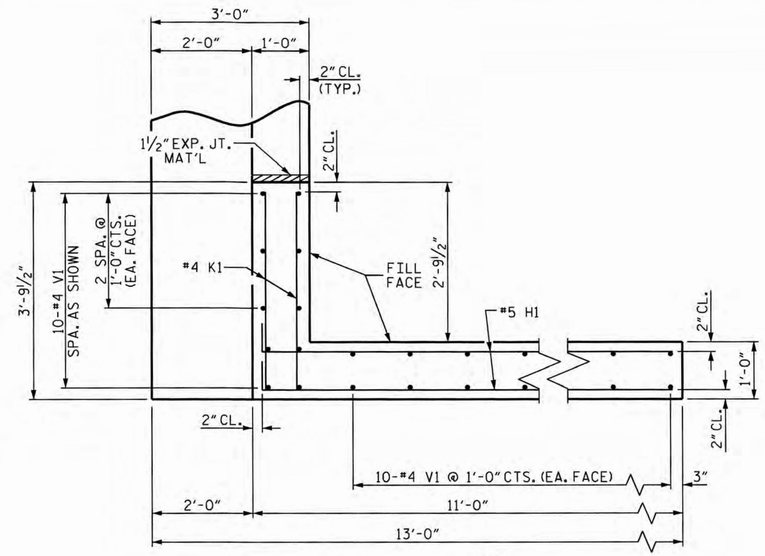

PLAN OF WING (W1)

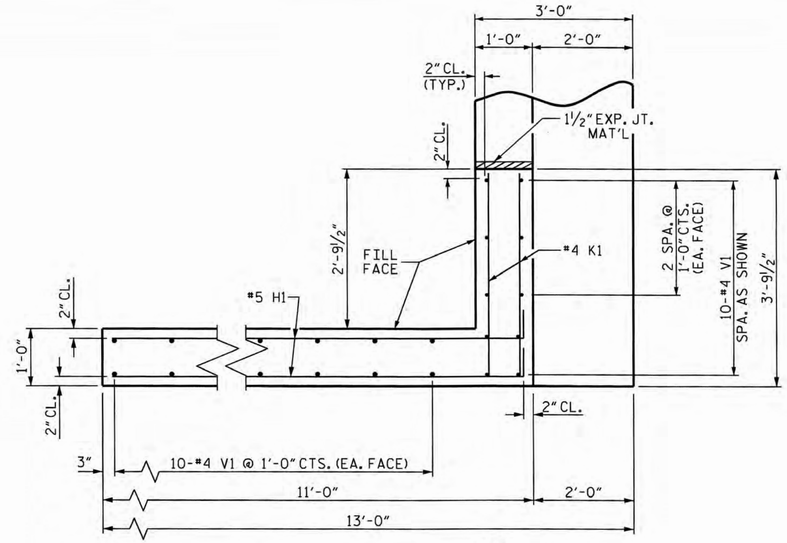

PLAN OF WING (W2)

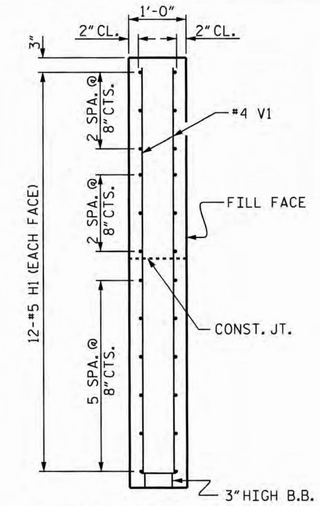

SECTION X-X

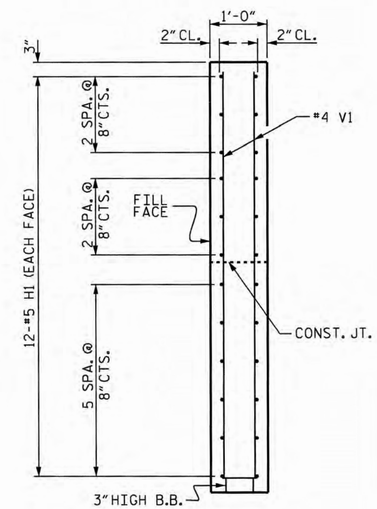

SECTION Y-Y

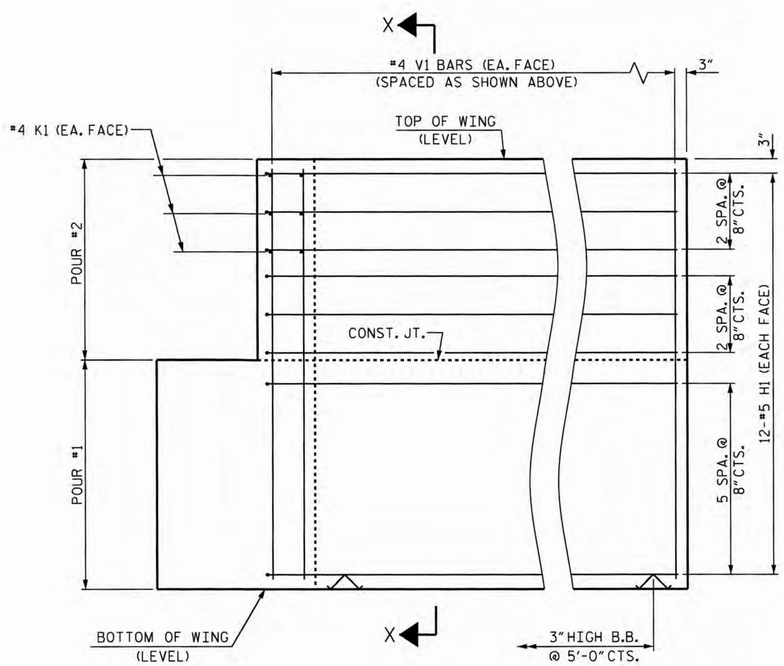

ELEVATION OF WING (W1)

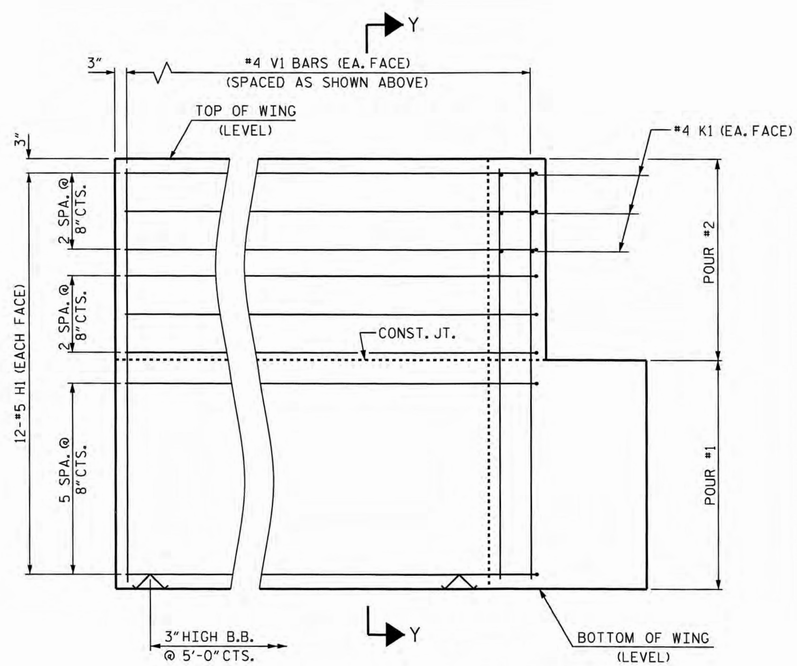

ELEVATION OF WING (W2)

WING DETAILS

PROJECT NO. BD-5107U
ROCKINGHAM COUNTY
STATION: 15+17.00 -L-

SHEET 3 OF 5

STATE OF NORTH CAROLINA
DEPARTMENT OF TRANSPORTATION
RALEIGH

SUBSTRUCTURE

END BENT
WING DETAILS

NORTH CAROLINA PROFESSIONAL SEAL 14855 ENGINEER DOUGLAS R. CALHOUN
8/26/14

REVISIONS						SHEET NO.
NO.	BY:	DATE:	NO.	BY:	DATE:	S-15
1			3			TOTAL SHEETS
2			4			19

ASSEMBLED BY : A. SORSENGINH	DATE : 10/2012
CHECKED BY : D.G. ELY	DATE : 11/2012
DRAWN BY : WJH 12/11	
CHECKED BY : AAC 12/11	

26-SEP-2014 13:17
S:\DPG2\Doug\DivisionProjects\BD-5107\BD-5107U\FinalPlans\BD5107U_SD_E*.dgn
asorsenginh

STD. NO. EB_30_90S4_33BB

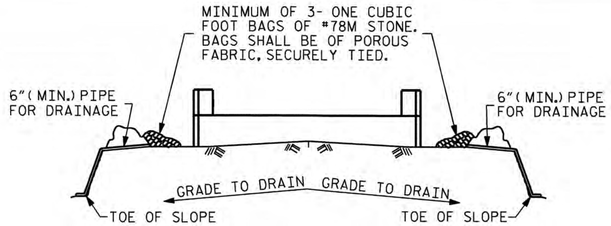

BAGGED STONE AND PIPE SHALL BE PLACED IMMEDIATELY AFTER COMPLETION OF END BENT EXCAVATION. PIPE MAY BE EITHER CONCRETE, CORRUGATED STEEL, CORRUGATED ALUMINUM ALLOY, OR CORRUGATED PLASTIC. PERFORATED PIPE WILL NOT BE ALLOWED.

BAGGED STONE SHALL REMAIN IN PLACE UNTIL THE ENGINEER DIRECTS THAT IT BE REMOVED. THE CONTRACTOR SHALL REMOVE AND DISPOSE OF SILT ACCUMULATIONS AT BAGGED STONE WHEN SO DIRECTED BY THE ENGINEER. BAGS SHALL BE REMOVED AND REPLACED WHENEVER THE ENGINEER DETERMINES THAT THEY HAVE DETERIORATED AND LOST THEIR EFFECTIVENESS.

NO SEPARATE PAYMENT WILL BE MADE FOR THIS WORK AND THE ENTIRE COST OF THIS WORK SHALL BE INCLUDED IN THE UNIT CONTRACT PRICE BID FOR THE SEVERAL PAY ITEMS.

TEMPORARY DRAINAGE AT END BENT

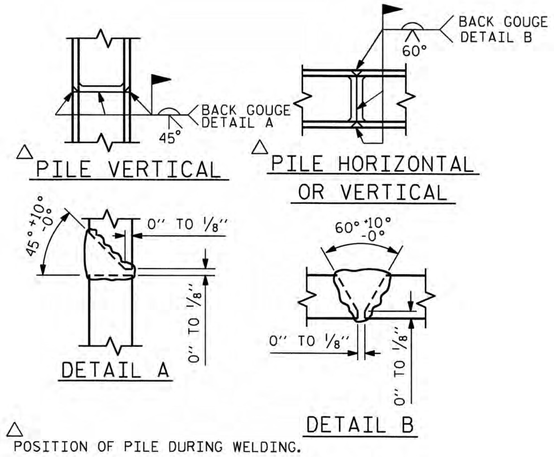

PILE SPLICE DETAILS

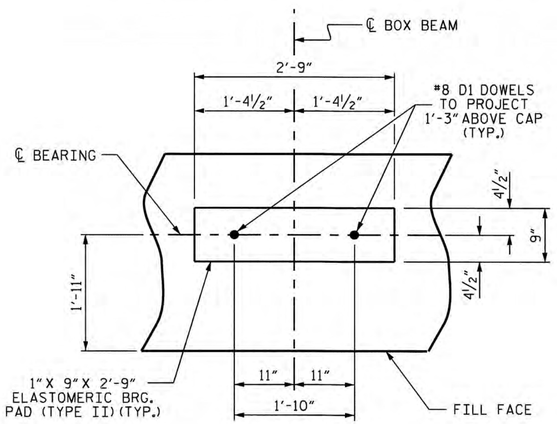

DETAIL "A"

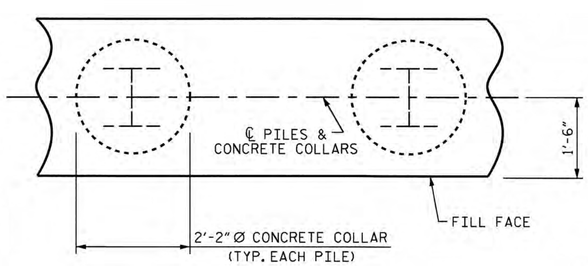

PLAN

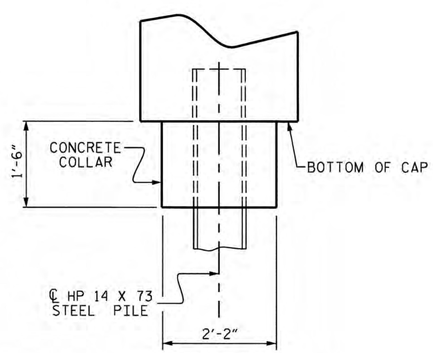

ELEVATION

CORROSION PROTECTION FOR STEEL PILES DETAIL

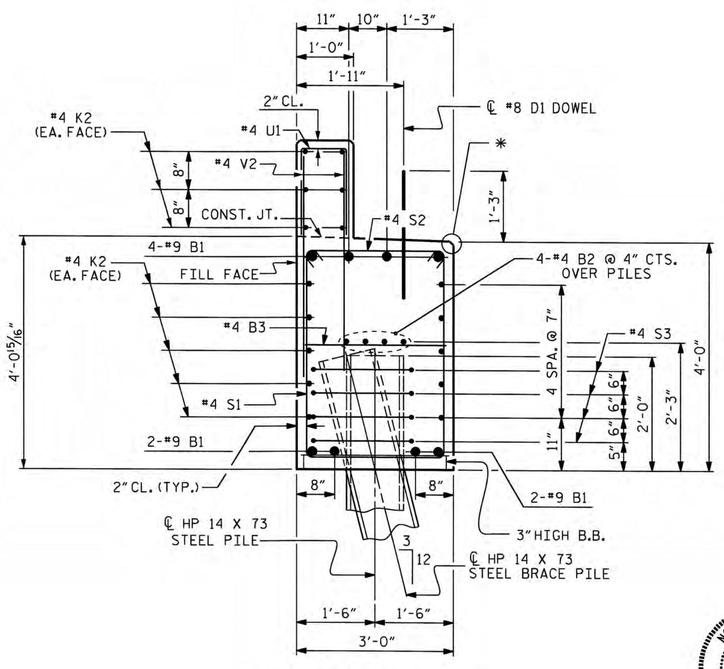

SECTION A-A

(CONCRETE COLLAR NOT SHOWN FOR CLARITY. SEE "CORROSION PROTECTION FOR STEEL PILES DETAIL.")

* TOP OF CAP ELEVATIONS ARE SHOWN AT THIS LOCATION

BAR TYPES

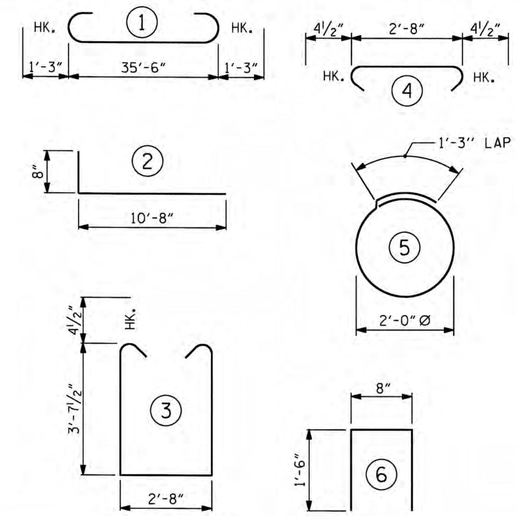

ALL BAR DIMENSIONS ARE OUT TO OUT.

END BENT 1
HP 14 X 73 STEEL PILES
NO: 5 LIN. FT.= 100
STEEL PILE POINTS NO. 5

BILL OF MATERIAL FOR END BENT #1

BAR	NO.	SIZE	TYPE	LENGTH	WEIGHT
B1	8	#9	1	38'-0"	1034
B2	28	#4	STR	19'-1"	357
B3	9	#4	STR	2'-8"	16
D1	20	#8	STR	2'-3"	120
H1	48	#5	2	11'-4"	567
K1	12	#4	STR	3'-5"	27
K2	12	#4	STR	19'-1"	153
S1	46	#4	3	10'-8"	328
S2	46	#4	4	3'-5"	105
S3	20	#4	5	7'-7"	101
U1	28	#4	6	3'-8"	69
V1	60	#4	STR	7'-2"	287
V2	56	#4	STR	5'-4"	200

REINFORCING STEEL (FOR ONE END BENT) 3364 LBS.

CLASS A CONCRETE BREAKDOWN (FOR ONE END BENT)

POUR #1 CAP, LOWER PART OF WINGS & COLLARS 20.0 C.Y.

POUR #2 BACKWALL & UPPER PART OF WINGS 5.6 C.Y.

TOTAL CLASS A CONCRETE 25.6 C.Y.

PROJECT NO. BD-5107U
ROCKINGHAM COUNTY
STATION: 15+17.00 -L-

SHEET 4 OF 5

STATE OF NORTH CAROLINA
DEPARTMENT OF TRANSPORTATION
RALEIGH

SUBSTRUCTURE

END BENT 1 DETAILS

NORTH CAROLINA PROFESSIONAL SEAL 14855 ENGINEER DOUGLAS R. CALHOUN
8/26/14

ASSEMBLED BY : A. SORSENGINH	DATE : 10/2012
CHECKED BY : D.G. ELY	DATE : 11/2012
DRAWN BY : WJH	12/11
CHECKED BY : AAC	12/11

REVISIONS						SHEET NO.
NO.	BY:	DATE:	NO.	BY:	DATE:	S-16
1			3			TOTAL SHEETS
2			4			19

26-SEP-2014 13:17
S:\DPG2\Doug\DivisionProjects\BD-5107\BD-5107U\Final Plans\BD5107U_SD_E*.dgn
asorsenginh

STD. NO. EB_30_90S4_33BB

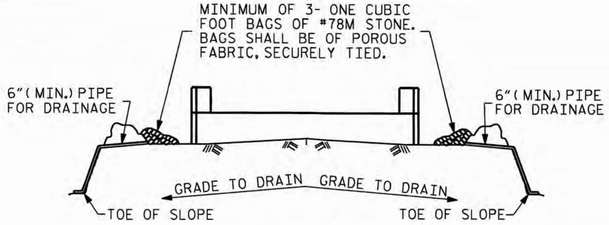

BAGGED STONE AND PIPE SHALL BE PLACED IMMEDIATELY AFTER COMPLETION OF END BENT EXCAVATION. PIPE MAY BE EITHER CONCRETE, CORRUGATED STEEL, CORRUGATED ALUMINUM ALLOY, OR CORRUGATED PLASTIC. PERFORATED PIPE WILL NOT BE ALLOWED.

BAGGED STONE SHALL REMAIN IN PLACE UNTIL THE ENGINEER DIRECTS THAT IT BE REMOVED. THE CONTRACTOR SHALL REMOVE AND DISPOSE OF SILT ACCUMULATIONS AT BAGGED STONE WHEN SO DIRECTED BY THE ENGINEER. BAGS SHALL BE REMOVED AND REPLACED WHENEVER THE ENGINEER DETERMINES THAT THEY HAVE DETERIORATED AND LOST THEIR EFFECTIVENESS.

NO SEPARATE PAYMENT WILL BE MADE FOR THIS WORK AND THE ENTIRE COST OF THIS WORK SHALL BE INCLUDED IN THE UNIT CONTRACT PRICE BID FOR THE SEVERAL PAY ITEMS.

TEMPORARY DRAINAGE AT END BENT

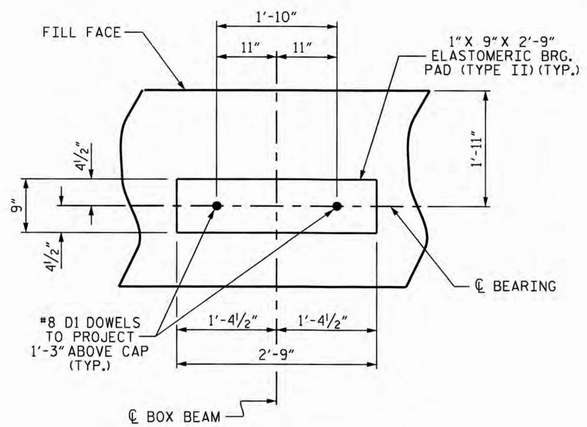

DETAIL "A"

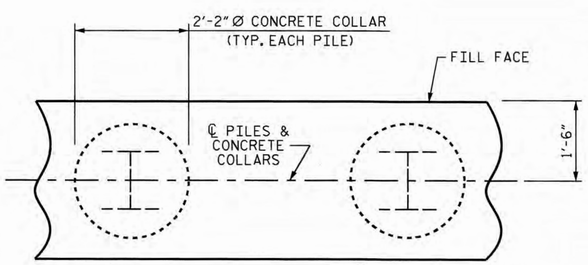

PLAN

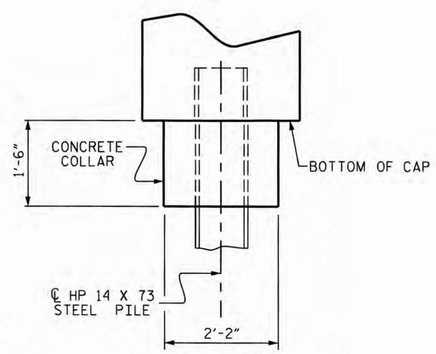

ELEVATION

CORROSION PROTECTION FOR STEEL PILES DETAIL

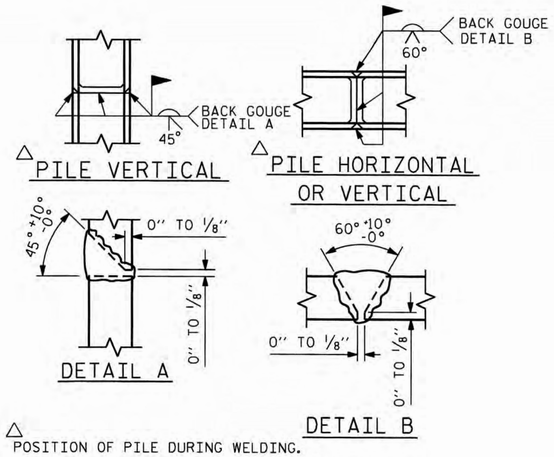

△ POSITION OF PILE DURING WELDING.

PILE SPLICE DETAILS

BAR TYPES

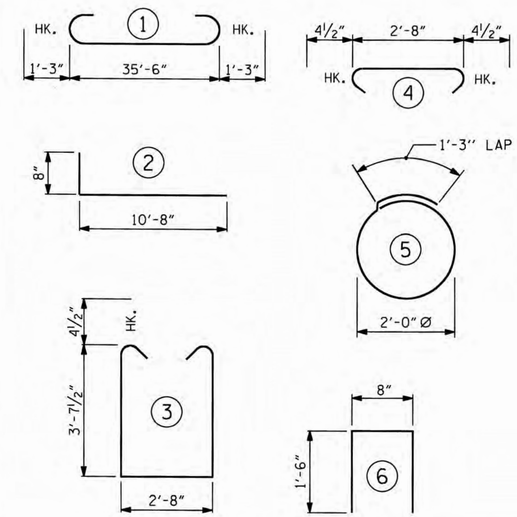

ALL BAR DIMENSIONS ARE OUT TO OUT.

END BENT 2
HP 14 X 73 STEEL PILES
NO: 5 LIN. FT.= 75
STEEL PILE POINTS NO. 5

BILL OF MATERIAL FOR END BENT #2

BAR	NO.	SIZE	TYPE	LENGTH	WEIGHT
B1	8	#9	1	38'-0"	1034
B2	28	#4	STR	19'-1"	357
B3	9	#4	STR	2'-8"	16
D1	20	#8	STR	2'-3"	120
H1	48	#5	2	11'-4"	567
K1	12	#4	STR	3'-5"	27
K2	12	#4	STR	19'-1"	153
S1	46	#4	3	10'-8"	328
S2	46	#4	4	3'-5"	105
S3	20	#4	5	7'-7"	101
U1	28	#4	6	3'-8"	69
V1	60	#4	STR	7'-2"	287
V2	56	#4	STR	5'-4"	200
REINFORCING STEEL (FOR ONE END BENT)					3364 LBS.

CLASS A CONCRETE BREAKDOWN (FOR ONE END BENT)

POUR #1 CAP, LOWER PART OF WINGS & COLLARS 20.0 C.Y.

POUR #2 BACKWALL & UPPER PART OF WINGS 5.6 C.Y.

TOTAL CLASS A CONCRETE 25.6 C.Y.

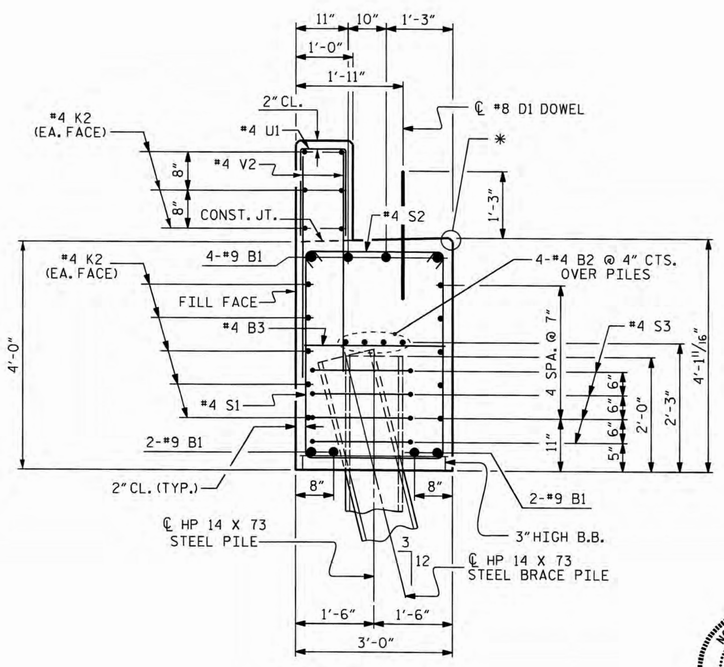

SECTION A-A

(CONCRETE COLLAR NOT SHOWN FOR CLARITY. SEE "CORROSION PROTECTION FOR STEEL PILES DETAIL.")

✱ TOP OF CAP ELEVATIONS ARE SHOWN AT THIS LOCATION

NORTH CAROLINA PROFESSIONAL SEAL 14855 ENGINEER DOUGLAS R. CALDWELL
9/26/14

PROJECT NO. BD-5107U
ROCKINGHAM COUNTY
STATION: 15+17.00 -L-

SHEET 5 OF 5

STATE OF NORTH CAROLINA
DEPARTMENT OF TRANSPORTATION
RALEIGH

SUBSTRUCTURE

END BENT 2 DETAILS

REVISIONS						SHEET NO.
NO.	BY:	DATE:	NO.	BY:	DATE:	5-17
1			3			TOTAL SHEETS
2			4			19

ASSEMBLED BY :	A. SORSENGINH	DATE :	10/2012
CHECKED BY :	D.G. ELY	DATE :	11/2012
DRAWN BY :	WJH 12/11		
CHECKED BY :	AAC 12/11		

26-SEP-2014 13:17
S:\DPG2\Doug\DivisionProjects\BD-5107\BD-5107U\FinalPlans\BD5107U_SD_E*.dgn
asorsenginh

STD. NO. EB_30_90S4_33BB

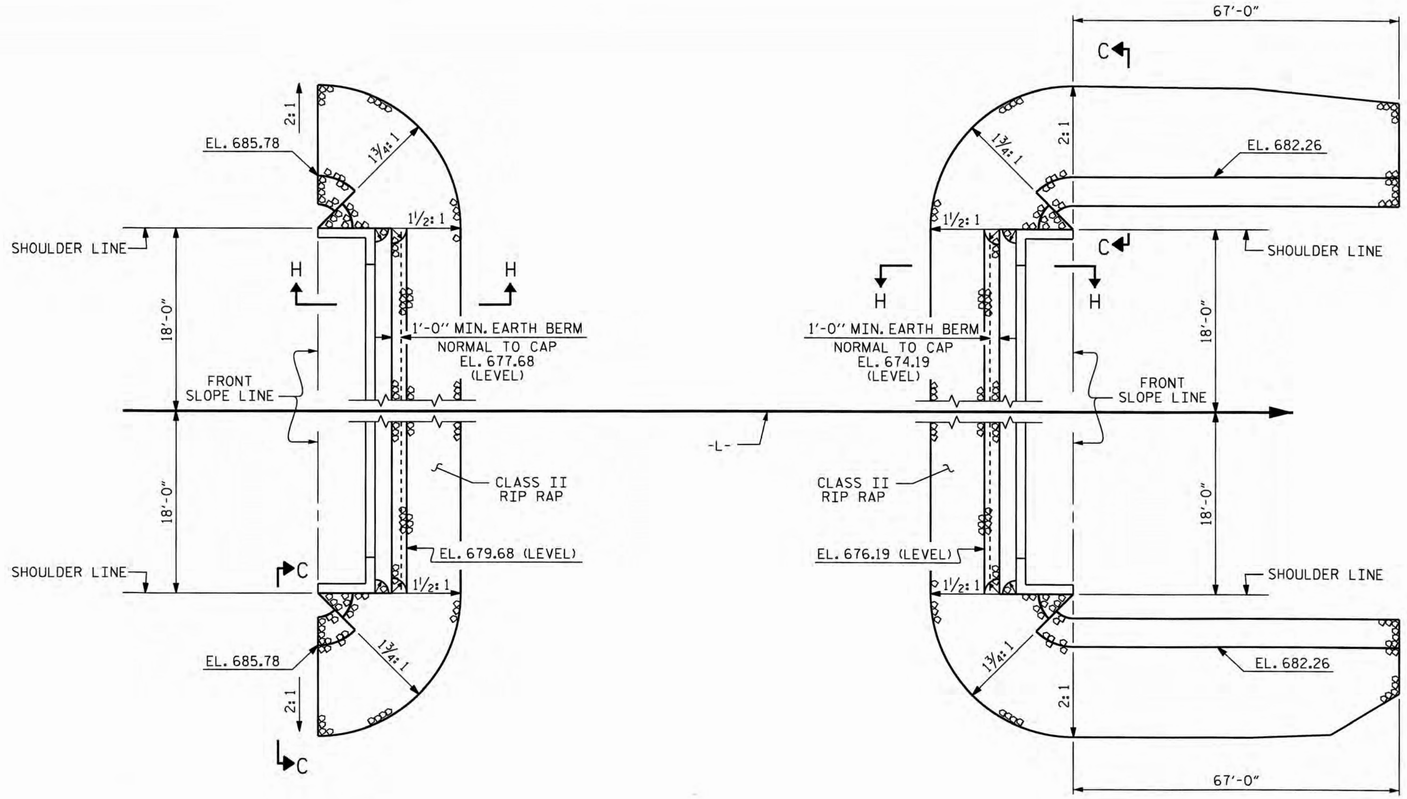

END BENT 1

PLAN

END BENT 2

ESTIMATED QUANTITIES		
BRIDGE @ STA. 15+17.00 -L-	RIP RAP CLASS II (2'-0" THICK)	GEOTEXTILE FOR DRAINAGE
	TONS	SQUARE YARDS
END BENT 1	195	215
END BENT 2	525	580

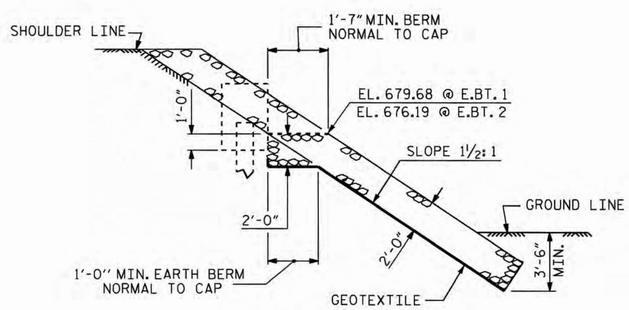

SECTION H-H

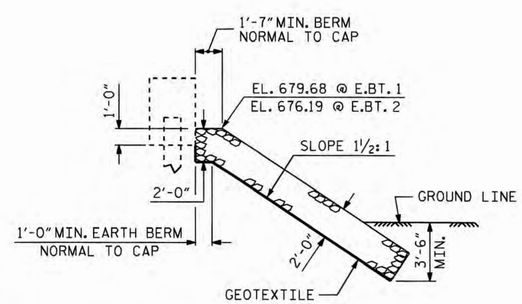

℄ SECTION
BERM RIP RAPPED

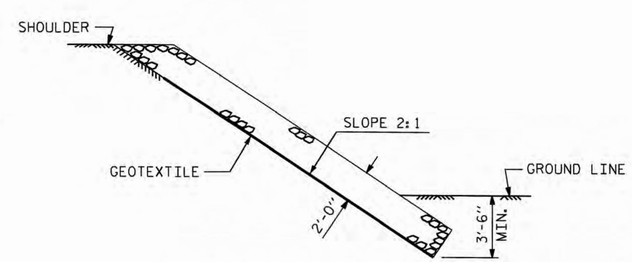

SECTION C-C

PROJECT NO. BD-5107U
ROCKINGHAM COUNTY
STATION: 15+17.00 -L-

STATE OF NORTH CAROLINA
DEPARTMENT OF TRANSPORTATION
RALEIGH

STANDARD

RIP RAP DETAILS

NORTH CAROLINA PROFESSIONAL SEAL 14855 ENGINEER DOUGLAS R. CALHOUN
8/26/14

ASSEMBLED BY : A. SORSENGINH	DATE : 3/2012
CHECKED BY : D.G. ELY	DATE : 11/2012

DRAWN BY : REK 1/84	REV. 5/1/06R	TLA/GM
CHECKED BY : RDU 1/84	REV. 10/1/11	MAA/GM
	REV. 12/21/11	MAA/GM

REVISIONS						SHEET NO.
NO.	BY:	DATE:	NO.	BY:	DATE:	S-18
1			3			TOTAL SHEETS
2			4			19

26-SEP-2014 13:16
S:\DPG2\Doug\DivisionProjects\BD-5107\BD-5107U\FinalPlans\BD5107U_SD_RR.dgn
asorsenginh

STD. NO. RR1

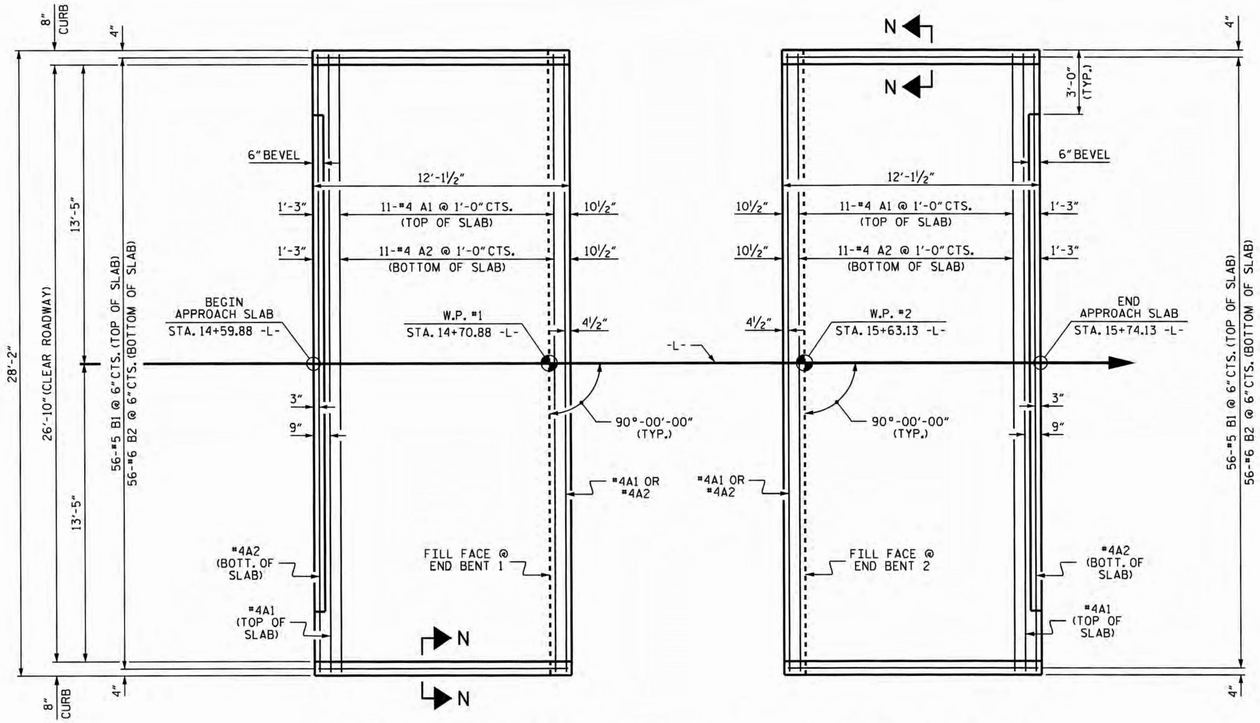

PLAN @ END BENT 1

PLAN @ END BENT 2

DIMENSIONS SHOWN ARE TYPICAL FOR BOTH APPROACH SLABS

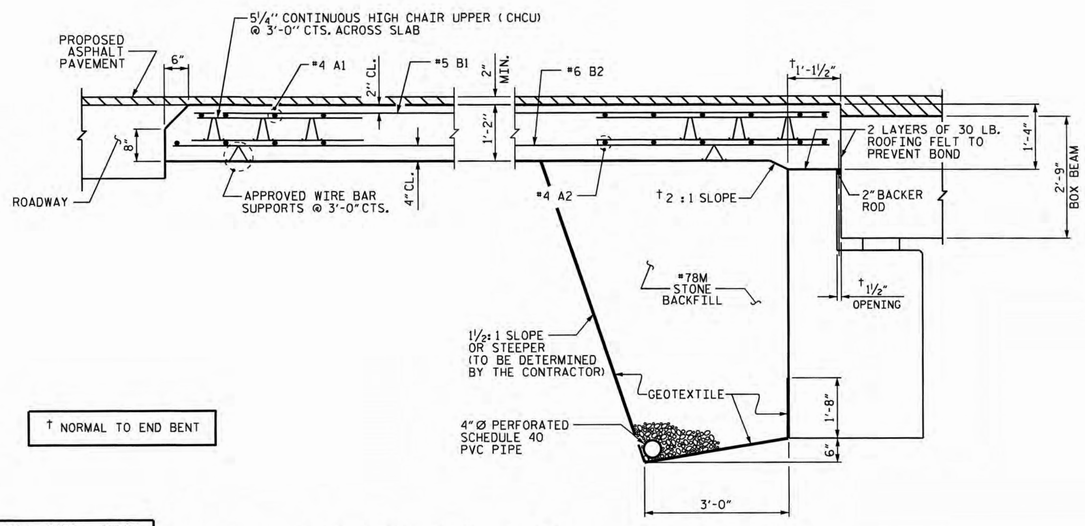

† NORMAL TO END BENT

SECTION THRU SLAB

NOTES

FOR BRIDGE APPROACH FILL INCLUDING GEOTEXTILE, 4" Ø DRAINAGE PIPE, AND #78M STONE BACKFILL, SEE ROADWAY PLANS.

GEOTEXTILE SHALL BE TYPE 1 IN ACCORDANCE WITH THE STANDARD SPECIFICATIONS SECTION 1056.

#78M STONE BACKFILL (CLASS V SELECT MATERIAL) SHALL BE IN ACCORDANCE WITH STANDARD SPECIFICATIONS SECTION 1016.

#78M STONE BACKFILL IS TO BE CONTINUOUS ALONG FILL FACE OF BACKWALL FROM OUTSIDE EDGE TO OUTSIDE EDGE OF APPROACH SLAB.

FOR THE 4" Ø DRAINAGE PIPE OUTLET(S), SEE ROADWAY STANDARD DRAWINGS.

AREA BETWEEN THE WINGWALL AND APPROACH SLAB SHALL BE GRADED TO DRAIN THE WATER AWAY FROM THE FILL FACE OF THE BRIDGE AND SHALL BE PAVED. SEE ROADWAY PLANS.

APPROACH SLAB GROOVING IS NOT REQUIRED.

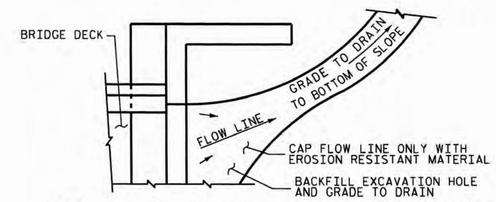

NOTE: IF THE APPROACH SLAB IS NOT CONSTRUCTED IMMEDIATELY AFTER THE BACKFILLING OF THE END BENT EXCAVATION, GRADE TO DRAIN TO THE BOTTOM OF THE SLOPE AND PROVIDE EROSION RESISTANT MATERIAL, SUCH AS FIBERGLASS ROVING OR AS DIRECTED BY THE ENGINEER TO PREVENT SOIL EROSION AND TO PROTECT THE AREA ADJACENT TO THE STRUCTURE. THE CONTRACTOR WILL BE REQUIRED TO REMOVE THESE MATERIALS PRIOR TO CONSTRUCTION OF THE APPROACH SLAB.

TEMPORARY DRAINAGE DETAIL

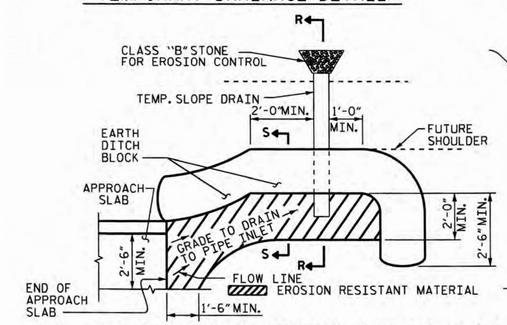

NOTE: IMMEDIATELY AFTER THE CONSTRUCTION OF THE APPROACH SLAB, THE CONTRACTOR SHALL PROVIDE TEMPORARY BERM AND SLOPE DRAIN. CONTRACTOR SHALL GRADE TO PIPE INLET AND PROVIDE EROSION RESISTANT MATERIAL AS SHOWN. THE EROSION RESISTANT MATERIAL SHALL BE EITHER 1) ASPHALT PLANT MIX, TYPE 1 OR TYPE 2, MIN. 2" DEPTH, 2) EROSION CONTROL MAT, OR 3) CONCRETE, AS DIRECTED BY THE ENGINEER. THE SLOPE DRAIN SHALL CONSIST OF A NON-PERFORATED TEMPORARY DRAINAGE PIPE, 12 INCHES IN DIAMETER.

PLAN VIEW

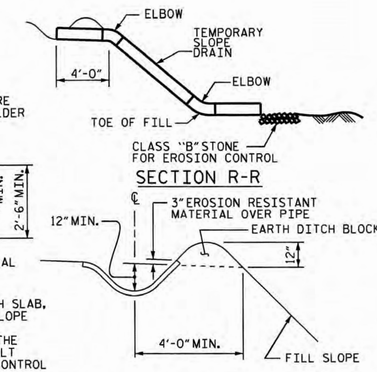

SECTION S-S

TEMPORARY BERM AND SLOPE DRAIN DETAILS

(TO BE USED WHEN SHOULDER BERM GUTTER IS REQUIRED)

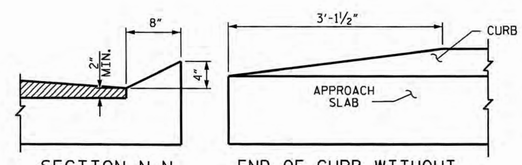

SECTION N-N

END OF CURB WITHOUT SHOULDER BERM GUTTER

CURB DETAILS

SPLICE LENGTHS		
BAR SIZE	EPOXY COATED	UNCOATED
#4	2'-0"	1'-9"
#5	2'-6"	2'-2"
#6	3'-10"	2'-7"

BILL OF MATERIAL

APPROACH SLAB AT EB 1

BAR	NO.	SIZE	TYPE	LENGTH	WEIGHT
* A1	13	#4	STR	27'-10"	242
A2	13	#4	STR	27'-10"	242
* B1	56	#5	STR	11'-2"	652
B2	56	#6	STR	11'-8"	981
REINFORCING STEEL				LBS.	1223
* EPOXY COATED REINFORCING STEEL				LBS.	894
CLASS AA CONCRETE				C.Y.	15.0

APPROACH SLAB AT EB 2

BAR	NO.	SIZE	TYPE	LENGTH	WEIGHT
* A1	13	#4	STR	27'-10"	242
A2	13	#4	STR	27'-10"	242
* B1	56	#5	STR	11'-2"	652
B2	56	#6	STR	11'-8"	981
REINFORCING STEEL				LBS.	1223
* EPOXY COATED REINFORCING STEEL				LBS.	894
CLASS AA CONCRETE				C.Y.	15.0

PROJECT NO. BD-5107U

ROCKINGHAM COUNTY

STATION: 15+17.00 -L-

STATE OF NORTH CAROLINA
DEPARTMENT OF TRANSPORTATION
RALEIGH

STANDARD
BRIDGE APPROACH SLAB
FOR PRESTRESSED CONCRETE
BOX BEAM UNIT
(SUB-REGIONAL TIER)
90° SKEW

NORTH CAROLINA PROFESSIONAL SEAL 14855 ENGINEER DOUGLAS R. CALHOUN
9/26/14

REVISIONS							SHEET NO.
NO.	BY:	DATE:	NO.	BY:	DATE:		S-19
1			3				TOTAL SHEETS
2			4				19

ASSEMBLED BY :	A. SORSENGINH	DATE :	10/2012
CHECKED BY :	D.G. ELY	DATE :	11/2012
DRAWN BY : MAA	11/11		
CHECKED BY : AAC	11/11		

26-SEP-2014 14:15
S:\DPG2\Doug\DivisionProjects\BD-5107\BD-5107U\Final Plans\BD5107U_SD_AS.dgn
asorsenginh

STD. NO. BAS_BB_30_90S

STANDARD NOTES

DESIGN DATA:

SPECIFICATIONS	A.A.S.H.T.O. (CURRENT)
LIVE LOAD	SEE PLANS
IMPACT ALLOWANCE	SEE A.A.S.H.T.O.
STRESS IN EXTREME FIBER OF	
STRUCTURAL STEEL - AASHTO M270 GRADE 36	20,000 LBS. PER SQ. IN.
- AASHTO M270 GRADE 50W	27,000 LBS. PER SQ. IN.
- AASHTO M270 GRADE 50	27,000 LBS. PER SQ. IN.
REINFORCING STEEL IN TENSION	
GRADE 60	24,000 LBS. PER SQ. IN.
CONCRETE IN COMPRESSION	1,200 LBS. PER SQ. IN.
CONCRETE IN SHEAR	SEE A.A.S.H.T.O.
STRUCTURAL TIMBER - TREATED OR	
UNTREATED - EXTREME FIBER STRESS	1,800 LBS. PER SQ. IN.
COMPRESSION PERPENDICULAR TO GRAIN OF TIMBER	375 LBS. PER SQ. IN.
EQUIVALENT FLUID PRESSURE OF EARTH	30 LBS. PER CU. FT. (MINIMUM)

MATERIAL AND WORKMANSHIP:

EXCEPT AS MAY OTHERWISE BE SPECIFIED ON PLANS OR IN THE SPECIAL PROVISIONS, ALL MATERIAL AND WORKMANSHIP SHALL BE IN ACCORDANCE WITH THE 2012 "STANDARD SPECIFICATIONS FOR ROADS AND STRUCTURES" OF THE N. C. DEPARTMENT OF TRANSPORTATION.

STEEL SHEET PILING FOR PERMANENT OR TEMPORARY APPLICATIONS SHALL BE HOT ROLLED.

CONCRETE:

UNLESS OTHERWISE REQUIRED ON PLANS, CLASS A CONCRETE SHALL BE USED FOR ALL PORTIONS OF ALL STRUCTURES WITH THE EXCEPTION THAT: CLASS AA CONCRETE SHALL BE USED IN BRIDGE SUPERSTRUCTURES, ABUTMENT BACKWALLS, AND APPROACH SLABS; AND CLASS B CONCRETE SHALL BE USED FOR SLOPE PROTECTION AND RIP RAP.

CONCRETE CHAMFERS:

UNLESS OTHERWISE NOTED ON THE PLANS, ALL EXPOSED CORNERS ON STRUCTURES SHALL BE CHAMFERED 3/4" WITH THE FOLLOWING EXCEPTIONS: TOP CORNERS OF CURBS MAY BE ROUNDED TO 1-1/2" RADIUS WHICH IS BUILT INTO CURB FORMS; CORNERS OF TRANSVERSE FLOOR EXPANSION JOINTS SHALL BE ROUNDED WITH A 1/4" FINISHING TOOL UNLESS OTHERWISE REQUIRED ON PLANS; AND CORNERS OF EXPANSION JOINTS IN THE ROADWAY FACES AND TOPS OF CURBS AND SIDEWALKS SHALL BE ROUNDED TO A 1/4" RADIUS WITH A FINISHING STONE OR TOOL UNLESS OTHERWISE REQUIRED ON PLANS.

DOWELS:

DOWELS WHEN INDICATED ON PLANS AS FOR CULVERT EXTENSIONS, SHALL BE EMBEDDED AT LEAST 12" INTO THE OLD CONCRETE AND GROUTED INTO PLACE WITH 1:2 CEMENT MORTAR.

ALLOWANCE FOR DEAD LOAD DEFLECTION, SETTLEMENT, ETC. IN CASTING SUPERSTRUCTURES:

BRIDGES SHALL BE BUILT ON THE GRADE OR VERTICAL CURVE SHOWN ON PLANS. SLABS, CURBS AND PARAPETS SHALL CONFORM TO THE GRADE OR CURVE.

ALL DIMENSIONS WHICH ARE GIVEN IN SECTION AND ARE AFFECTED BY DEAD LOAD DEFLECTIONS ARE DIMENSIONS AT CENTER LINE OF BEARING UNLESS OTHERWISE NOTED ON PLANS. IN SETTING FORMS FOR STEEL BEAM BRIDGES AND PRESTRESSED CONCRETE GIRDER BRIDGES, ADJUSTMENTS SHALL BE MADE DUE TO THE DEAD LOAD DEFLECTIONS FOR THE ELEVATIONS SHOWN. WHERE BLOCKS ARE SHOWN OVER BEAMS FOR BUILDING UP TO THE SLAB, THE VERTICAL DIMENSIONS OF THE BLOCKS SHALL BE ADJUSTED BETWEEN BEARINGS TO COMPENSATE FOR DEAD LOAD DEFLECTIONS, VERTICAL CURVE ORDINATE, AND ACTUAL BEAM CAMBER. WHERE BOTTOM OF SLAB IS IN LINE WITH BOTTOM OF TOP FLANGES, DEPTH OF SLAB BETWEEN BEARINGS SHALL BE ADJUSTED TO COMPENSATE FOR DEAD LOAD DEFLECTION, VERTICAL CURVE ORDINATE, AND ACTUAL BEAM CAMBER.

IN SETTING FALSEWORK AND FORMS FOR REINFORCED CONCRETE SPANS, AN ALLOWANCE SHALL BE MADE FOR DEAD LOAD DEFLECTIONS, SETTLEMENT OF FALSEWORK, AND PERMANENT CAMBER WHICH SHALL BE PROVIDED FOR IN ADDITION TO THE ELEVATIONS SHOWN. AFTER REMOVAL OF THE FALSEWORK, THE FINISHED STRUCTURES SHALL CONFORM TO THE PROFILE AND ELEVATIONS SHOWN ON THE PLANS AND CONSTRUCTION ELEVATIONS FURNISHED BY THE ENGINEER.

DETAILED DRAWINGS FOR FALSEWORK OR FORMS FOR BRIDGE SUPERSTRUCTURE AND ANY STRUCTURE OR PARTS OF A STRUCTURE AS NOTED ON THE PLANS SHALL BE SUBMITTED TO THE ENGINEER FOR APPROVAL BEFORE CONSTRUCTION OF THE FALSEWORK OR FORMS IS STARTED.

REINFORCING STEEL:

ALL REINFORCING STEEL SHALL BE DEFORMED. DIMENSIONS RELATIVE TO PLACEMENT OF REINFORCING ARE TO CENTERS OF BARS UNLESS OTHERWISE INDICATED IN THE PLANS. DIMENSIONS ON BAR DETAILS ARE TO CENTERS OF BARS OR ARE OUT TO OUT AS INDICATED ON PLANS.

WIRE BAR SUPPORTS SHALL BE PROVIDED FOR REINFORCING STEEL WHERE INDICATED ON THE PLANS. WHEN BAR SUPPORT PIECES ARE PLACED IN CONTINUOUS LINES, THEY SHALL BE SO PLACED THAT THE ENDS OF THE SUPPORTING WIRES SHALL BE LAPPED TO LOCK LEGS ON ADJOINING PIECES.

STRUCTURAL STEEL:

AT THE CONTRACTOR'S OPTION, HE MAY SUBSTITUTE 7/8" Ø SHEAR STUDS FOR THE 3/4" Ø STUDS SPECIFIED ON THE PLANS. THIS SUBSTITUTION SHALL BE MADE AT THE RATE OF 3 - 7/8" Ø STUDS FOR 4 - 3/4" Ø STUDS, AND STUD SPACING CHANGES SHALL BE MADE AS NECESSARY TO PROVIDE THE SAME EQUIVALENT NUMBER OF 7/8" Ø STUDS ALONG THE BEAM AS SHOWN FOR 3/4" Ø STUDS BASED ON THE RATIO OF 3 - 7/8" Ø STUDS FOR 4 - 3/4" Ø STUDS. STUDS OF THE LENGTH SPECIFIED ON THE PLANS MUST BE PROVIDED. THE MAXIMUM SPACING SHALL BE 2'-0".

EXCEPT AT THE INTERIOR SUPPORTS OF CONTINUOUS BEAMS WHERE THE COVER PLATE IS IN CONTACT WITH BEARING PLATE, THE CONTRACTOR MAY, AT HIS OPTION, SUBSTITUTE FOR THE COVER PLATES DESIGNATED ON THE PLANS COVER PLATES OF THE EQUIVALENT AREA PROVIDED THESE PLATES ARE AT LEAST 5/16" IN THICKNESS AND DO NOT EXCEED A WIDTH EQUAL TO THE FLANGE WIDTH LESS 2" OR A THICKNESS EQUAL TO 2 TIMES THE FLANGE THICKNESS. THE SIZE OF FILLET WELDS SHALL CONFORM TO THE REQUIREMENTS OF THE CURRENT ANSI/AASHTO/AWS "BRIDGE WELDING CODE". ELECTROSLAG WELDING WILL NOT BE PERMITTED.

WITH THE SOLE EXCEPTION OF EDGES AT SURFACES WHICH BEAR ON OTHER SURFACES, ALL SHARP EDGES AND ENDS OF SHAPES AND PLATES SHALL BE SLIGHTLY ROUNDED BY SUITABLE MEANS TO A RADIUS OF APPROXIMATELY 1/16 INCH OR EQUIVALENT FLAT SURFACE AT A SUITABLE ANGLE PRIOR TO PAINTING, GALVANIZING, OR METALLIZING.

HANDRAILS AND POSTS:

METAL STANDARDS AND FACES OF THE CONCRETE END POSTS FOR THE METAL RAIL SHALL BE SET NORMAL TO THE GRADE OF THE CURB, UNLESS OTHERWISE SHOWN ON PLANS. THE METAL RAIL AND TOPS OF CONCRETE POSTS USED WITH THE ALUMINUM RAIL SHALL BE BUILT PARALLEL TO THE GRADE OF THE CURB.

METAL HANDRAILS SHALL BE IN ACCORDANCE WITH THE PLANS. RAILS SHALL BE AS MANUFACTURED FOR BRIDGE RAILING. CASTINGS SHALL BE OF A UNIFORM APPEARANCE. FINS AND OTHER DEFORMATIONS RESULTING FROM CASTING OR OTHERWISE SHALL BE REMOVED IN A MANNER SO THAT A UNIFORM COLORING OF THE COMPLETED CASTING SHALL BE OBTAINED. CASTINGS WITH DISCOLORATIONS OR OF NON-UNIFORM COLORING WILL NOT BE ACCEPTED. CERTIFIED MILL REPORTS ARE REQUIRED FOR METAL RAILS AND POSTS.

SPECIAL NOTES:

GENERALLY, IN CASE OF DISCREPANCY, THIS STANDARD SHEET OF NOTES SHALL GOVERN OVER THE SPECIFICATIONS, BUT THE REMAINDER OF THE PLANS SHALL GOVERN OVER NOTES HEREON, AND SPECIAL PROVISIONS SHALL GOVERN OVER ALL. SEE SPECIFICATIONS ARTICLE 105-4.

ENGLISH

JANUARY, 1990