09/08/99

TIP PROJECT: W-5208J

CONTRACT:

See Sheet 1-A For Index of Sheets

STATE OF NORTH CAROLINA
DIVISION OF HIGHWAYS

STATE	STATE PROJECT REFERENCE NO.	SHEET NO.	TOTAL SHEETS
N.C.	W-5208J	1	

STATE PROJ. NO.	F.A. PROJ. NO.	DESCRIPTION
45338.1.10	HSIP-0401 (254)	PE
45338.2.10	HSIP-0401 (254)	R/W
45338.3.10	HSIP-0401 (254)	CONST.

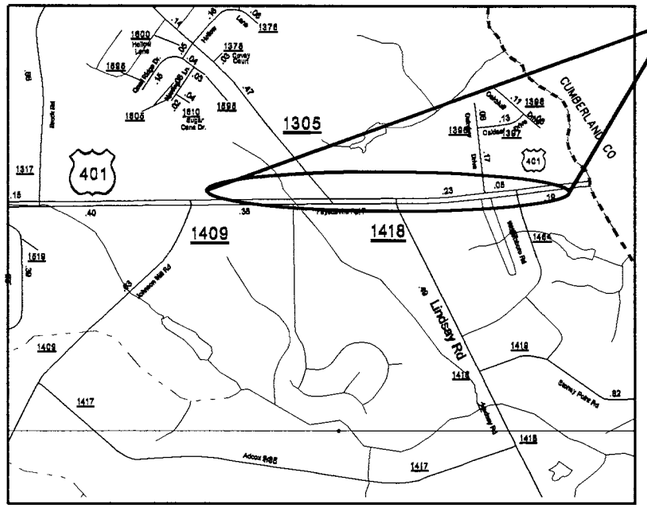

HOKE COUNTY

LOCATION: US 401 AT SR 1305 (WAYSIDE RD.) AND SR 1409 (LINDSAY RD)

TYPE OF WORK: GRADING, PAVING, DRAINAGE, CONCRETE ISLANDS, SIGNAL AND THEMOPLASTIC MARKINGS & MARKERS

-Y3- STA 10+51.70
BEGIN PROJECT W-5208J

-L MED- STA 55+40
END PROJECT W-5208J

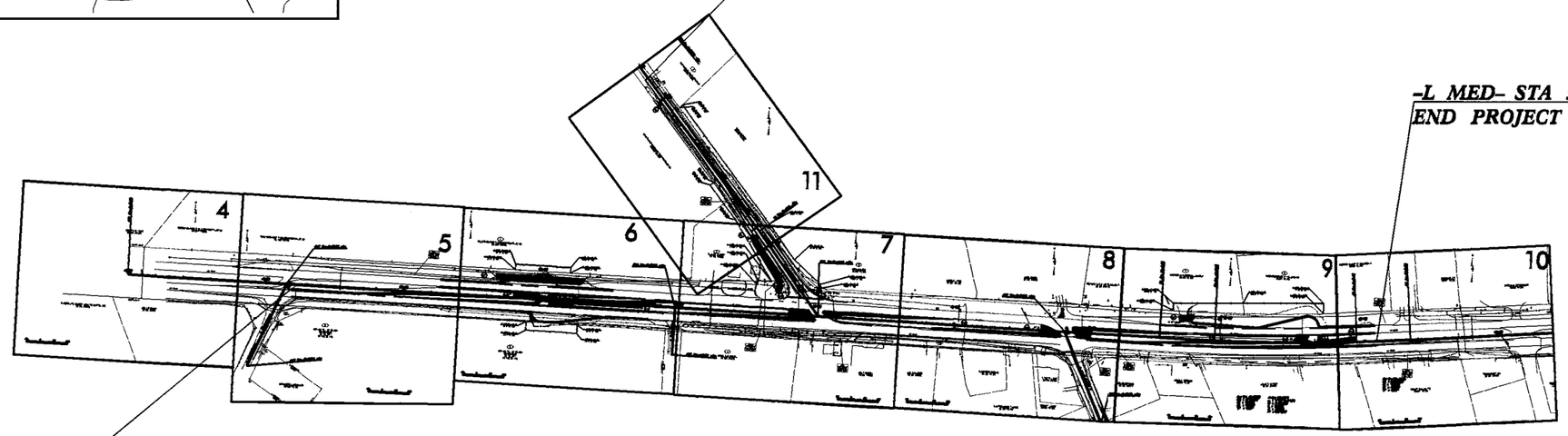

-L MED- STA. 15+93.94
BEGIN PROJECT W-5208J

GRAPHIC SCALES

0 25 50
PLANS

DESIGN DATA

ADT 2012 = 29,000

D = 50 %
T = 6 % *
V = 45 MPH
* TTST = 3 DUAL 3

Prepared In the Office of:
DIVISION OF HIGHWAYS
DIVISION 8 DESIGN & CONSTRUCT UNIT
902 N. SANDHILLS BLVD.
ABERDEEN NC 28315
PLANS PREPARED BY: MRT

PROJECT LENGTH
ROADWAY: 0.93 MILES
STRUCTURE: ____ MILES
TOTAL: 0.93 MILES

DIVISION OF HIGHWAYS

2012 STANDARD SPECIFICATIONS

RIGHT OF WAY DATE:

LETTING DATE:

DIVISION DESIGN & CONSTRUCT ENGINEER

NORTH CAROLINA PROFESSIONAL SEAL 26930 ENGINEER GREG S. DAVIS

5-30-14

29-MAY-2014 16:09
C:\div8_projects\rgy\HOKE\nc401@sr_1305(wayside_rd)\psh\us401@SR-1305(wayside_rd)_tsh.dgn
gsdavis AT D8CAD-270410

PROJECT REFERENCE NO.	SHEET NO.
W-5208J	2
R/W SHEET NO.	

5-30-14

TYPICAL SECTION NO. 1
-L MED - STA. 15+93.94 TO 17+00.00

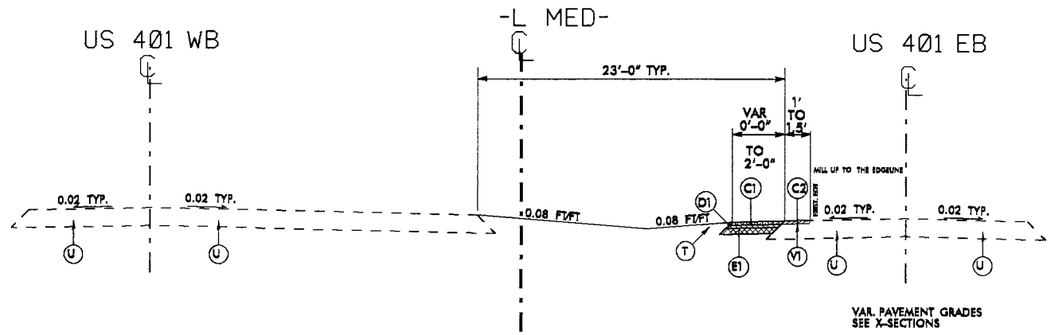

TYPICAL SECTION NO. 2
-L MED- STA. 17+00.00 TO 21+25.20

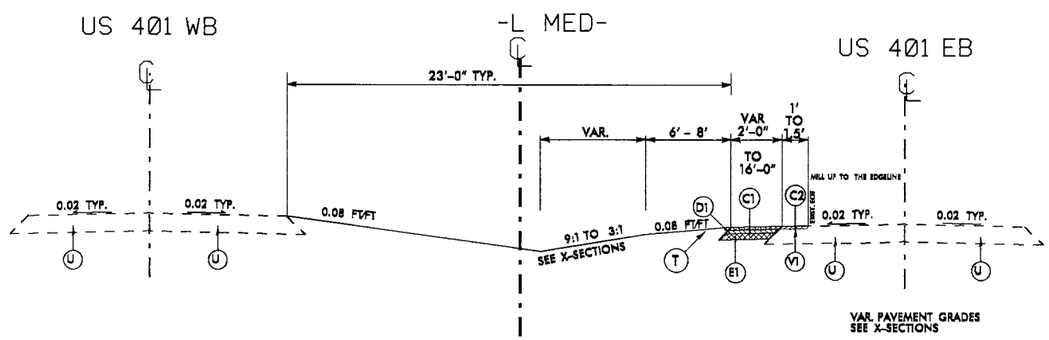

TYPICAL SECTION NO. 3
-L MED- STA. 21+25.20 TO 22+20

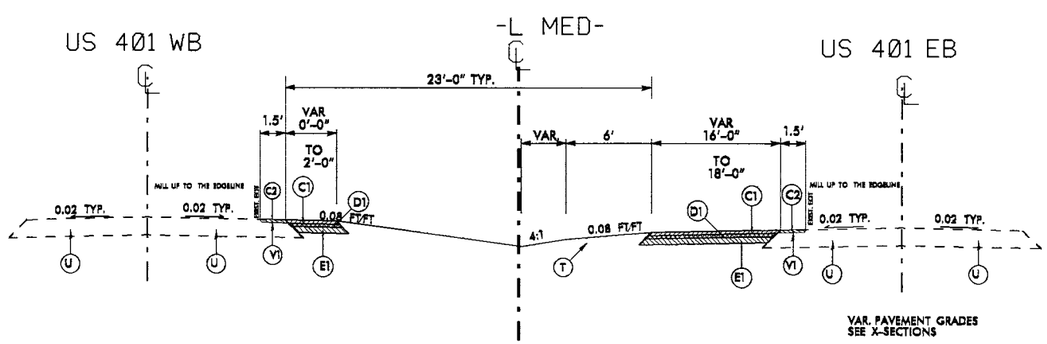

PAVEMENT SCHEDULE

C1	PROP. APPROX. 3" ASPHALT CONCRETE SURFACE COURSE, TYPE S9.5B, AT AN AVERAGE RATE OF 168 LBS. PER SQ. YD. PER 1½" DEPTH. TO BE PLACED IN TWO LAYERS.
C2	PROP. APPROX. 1.5" ASPHALT CONCRETE SURFACE COURSE, TYPE S9.5B, AT AN AVERAGE RATE OF 168 LBS. PER SQ. YD.
D1	PROP. APPROX. 4" ASPHALT CONCRETE INTERMEDIATE COURSE, TYPE I19.B, AT AN AVERAGE RATE OF 456 LBS. PER SQ. YD.
E1	PROP. APPROX. 5.5" ASPHALT CONCRETE BASE COURSE, TYPE B25.B, AT AN AVERAGE RATE OF 627 LBS. PER SQ. YD.
R1	5" MONOLITHIC CONCRETE ISLAND. (SURFACE MOUNTED)
T	EARTH MATERIAL.
U	EXISTING PAVEMENT.
V1	0" TO 1.5" MILLING

NOTE: PAVEMENT EDGE SLOPES ARE 1:1 UNLESS SHOWN OTHERWISE.

TYPICAL SECTION NO. 4
-L MED- STA. 22+20.00 TO 24+05.38

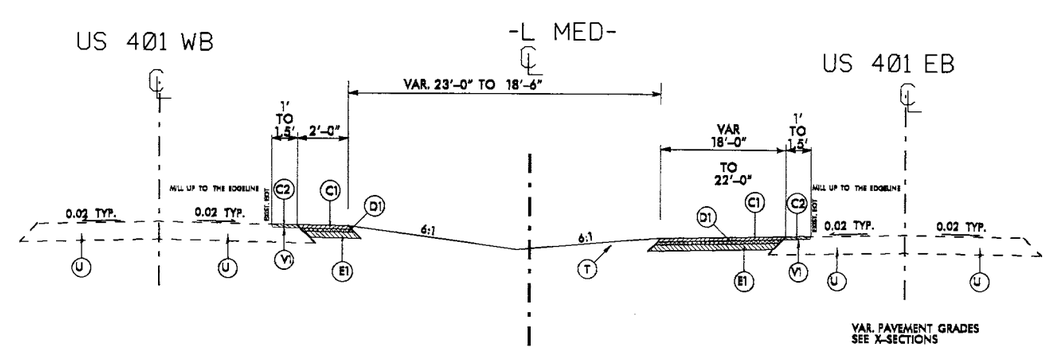

8/17/99
23-MAY-2014 14:13
c:\pwworking\d0_hdx\hdxfx\nc401esr_1305\wayside_rd\psh\us401esr-1305\wayside_rd_typ.dgn

PROJECT REFERENCE NO.	SHEET NO.
W-5208J	2-A
R/W SHEET NO.	

5-30-14

DIVISION DESIGN / CONSTRUCT ENGINEER

TYPICAL SECTION NO. 5
-L MED- STA. 21+30.58 TO 27+56.93 LT

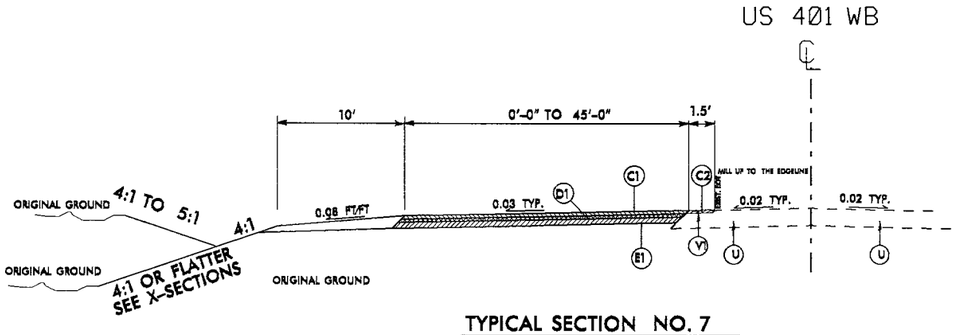

TYPICAL SECTION NO. 6
-L MED- STA. 22+64.38 TO 26+00.00 RT

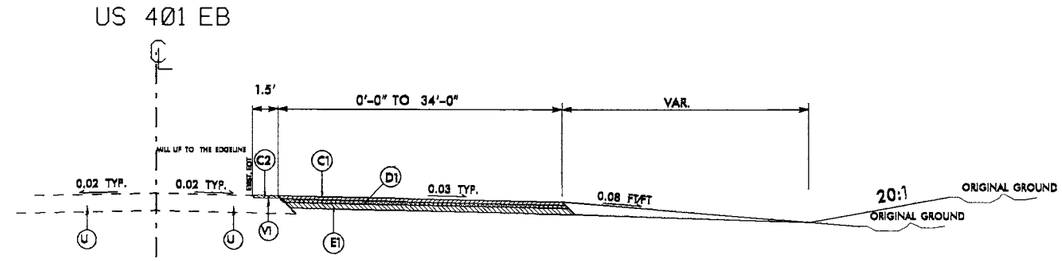

TYPICAL SECTION NO. 7
-L MED- STA. 26+00.00 TO 28+90.20 RT

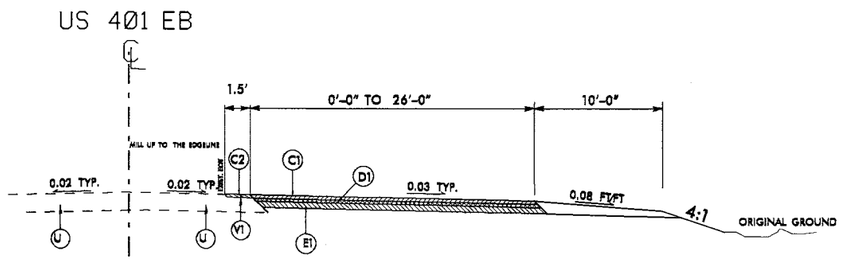

TYPICAL SECTION NO. 8
-L MED- STA. 24+05.38 TO 25+11.00

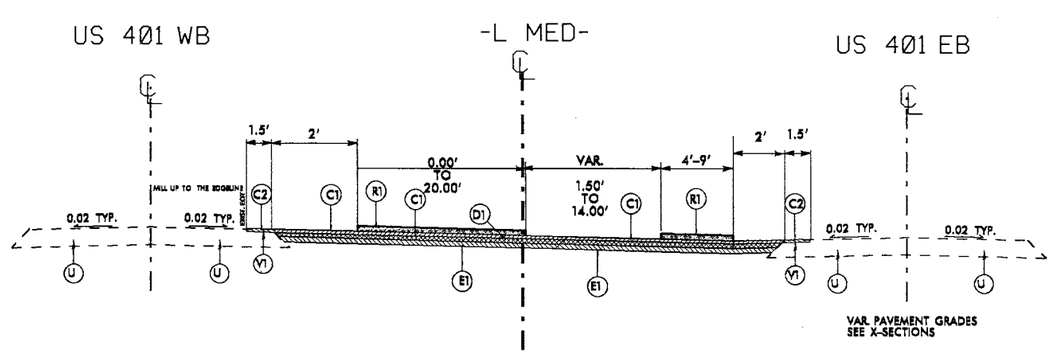

PAVEMENT SCHEDULE

C1	PROP. APPROX. 3" ASPHALT CONCRETE SURFACE COURSE, TYPE S9.5B, AT AN AVERAGE RATE OF 168 LBS. PER SQ. YD. PER 1½" DEPTH. TO BE PLACED IN TWO LAYERS.
C2	PROP. APPROX. 1.5" ASPHALT CONCRETE SURFACE COURSE, TYPE S9.5B, AT AN AVERAGE RATE OF 168 LBS. PER SQ. YD.
D1	PROP. APPROX. 4" ASPHALT CONCRETE INTERMEDIATE COURSE, TYPE I19.B, AT AN AVERAGE RATE OF 456 LBS. PER SQ. YD.
E1	PROP. APPROX. 5.5" ASPHALT CONCRETE BASE COURSE, TYPE B25.B, AT AN AVERAGE RATE OF 627 LBS. PER SQ. YD.
R1	5" MONOLITHIC CONCRETE ISLAND. (SURFACE MOUNTED)
T	EARTH MATERIAL.
U	EXISTING PAVEMENT.
V1	0" TO 1.5" MILLING

NOTE: PAVEMENT EDGE SLOPES ARE 1:1 UNLESS SHOWN OTHERWISE.

REVISIONS

8/17/99

28-MAY-2014 16:30
r:\roadway\proj\53_rdu\HOKE\rw4010sr_1305\ways.de_rd\psh\us401@SR-1305\ways.de_rd_typ.dgn
$$$$USER$ PROJECT$ 00-270410

PROJECT REFERENCE NO.	SHEET NO.
W-5208J	2-B
R/W SHEET NO.	

G S Davis
5-30-14

NORTH CAROLINA PROFESSIONAL SEAL 26930 ENGINEER GEORGE E. DAVIS

DIVISION DESIGN / CONSTRUCT ENGINEER

TYPICAL SECTION NO. 9
-L MED- STA. 25+11.00 TO 26+15.39

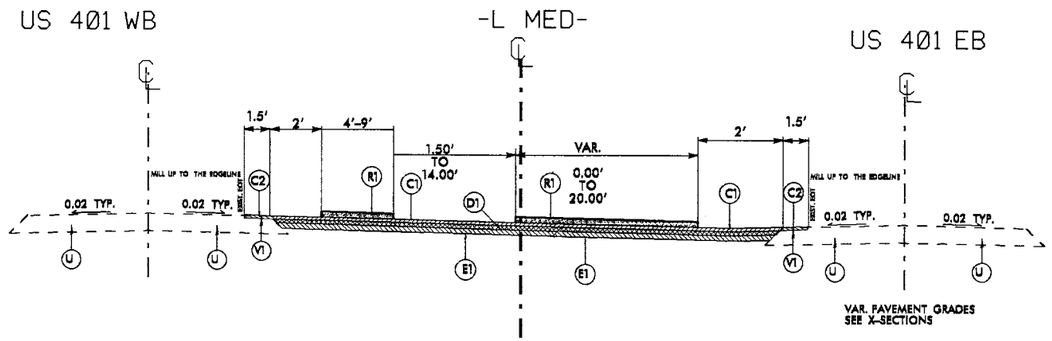

TYPICAL SECTION NO. 10
-L MED- STA. 26+15.39 TO 29+20.00

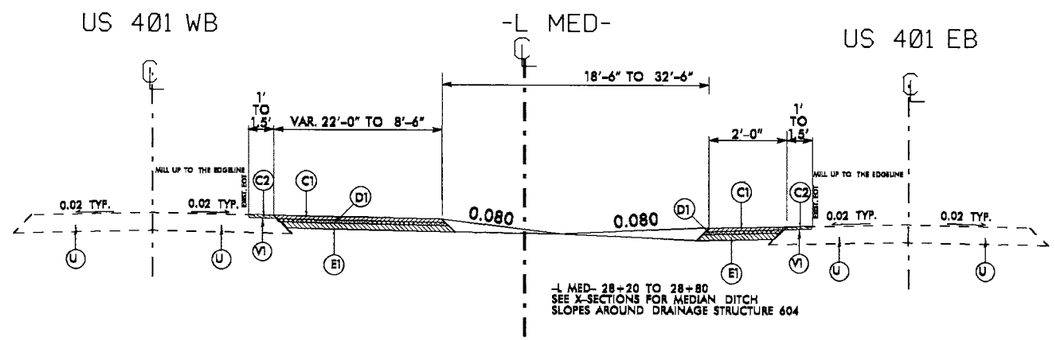

TYPICAL SECTION NO. 11
-L MED- STA. 29+20.00 TO 29+96.24

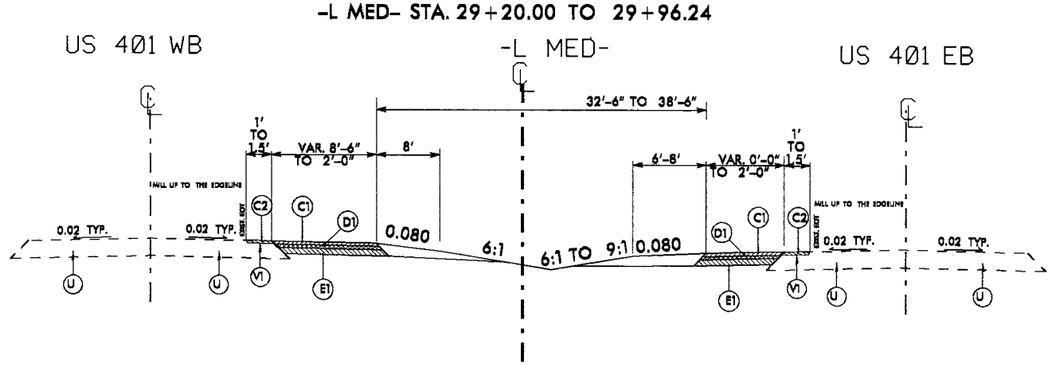

PAVEMENT SCHEDULE

C1	PROP. APPROX. 3" ASPHALT CONCRETE SURFACE COURSE, TYPE S9.5B, AT AN AVERAGE RATE OF 168 LBS. PER SQ. YD. PER 1½" DEPTH. TO BE PLACED IN TWO LAYERS.
C2	PROP. APPROX. 1.5" ASPHALT CONCRETE SURFACE COURSE, TYPE S9.5B, AT AN AVERAGE RATE OF 168 LBS. PER SQ. YD.
D1	PROP. APPROX. 4" ASPHALT CONCRETE INTERMEDIATE COURSE, TYPE I19.B, AT AN AVERAGE RATE OF 456 LBS. PER SQ. YD.
E1	PROP. APPROX. 5.5" ASPHALT CONCRETE BASE COURSE, TYPE B25.B, AT AN AVERAGE RATE OF 627 LBS. PER SQ. YD.
R1	5" MONOLITHIC CONCRETE ISLAND. (SURFACE MOUNTED)
T	EARTH MATERIAL.
U	EXISTING PAVEMENT.
V1	0" TO 1.5" MILLING

NOTE: PAVEMENT EDGE SLOPES ARE 1:1 UNLESS SHOWN OTHERWISE.

REVISIONS

8/17/99

28-MAY-2014 16:30
c:\pwworking\rdu\HOKE\nc4010sr_1305\wayside_rd\psh\us401@SR-1305(waysside_rd)_tap.dgn

PROJECT REFERENCE NO.	SHEET NO.
W-5208J	2-C
R/W SHEET NO.	

5-30-14

DIVISION DESIGN / CONSTRUCT ENGINEER

TYPICAL SECTION NO. 12
-L MED- STA. 29+96.24.00 TO 34+00.00

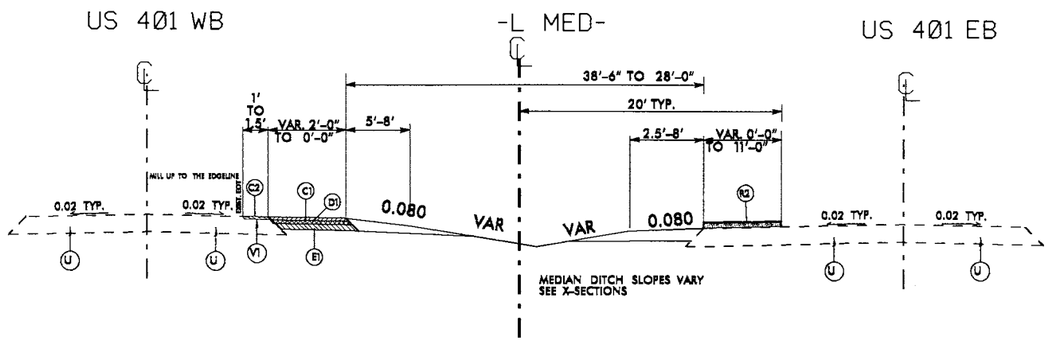

TYPICAL SECTION NO. 13
-L MED- STA. 34+00.00 TO 34+95.00

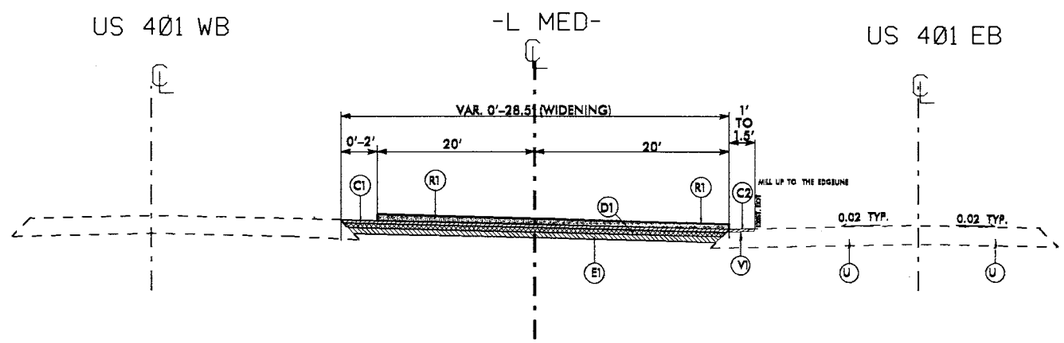

TYPICAL SECTION NO. 14
-L MED- STA. 35+20.00 TO 39+16.95

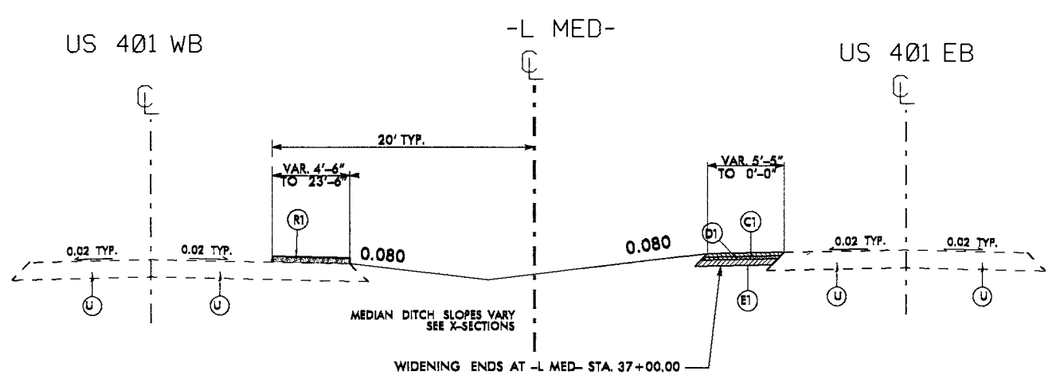

PAVEMENT SCHEDULE

C1	PROP. APPROX. 3" ASPHALT CONCRETE SURFACE COURSE, TYPE S9.5B, AT AN AVERAGE RATE OF 166 LBS. PER SQ. YD. PER 1½" DEPTH. TO BE PLACED IN TWO LAYERS.
C2	PROP. APPROX. 1.5" ASPHALT CONCRETE SURFACE COURSE, TYPE S9.5B, AT AN AVERAGE RATE OF 166 LBS. PER SQ. YD.
D1	PROP. APPROX. 4" ASPHALT CONCRETE INTERMEDIATE COURSE, TYPE I19.B, AT AN AVERAGE RATE OF 456 LBS. PER SQ. YD.
E1	PROP. APPROX. 5.5" ASPHALT CONCRETE BASE COURSE, TYPE B25.B, AT AN AVERAGE RATE OF 627 LBS. PER SQ. YD.
R1	5" MONOLITHIC CONCRETE ISLAND. (SURFACE MOUNTED)
T	EARTH MATERIAL.
U	EXISTING PAVEMENT.
V1	0" TO 1.5" MILLING

NOTE: PAVEMENT EDGE SLOPES ARE 1:1 UNLESS SHOWN OTHERWISE.

REVISIONS

8/17/99

23-MAY-2014 14:13
C:\DGN\8-PDLegs\rdi\HOKE\vnc401@sr_1305\waysde_rdi\psh\us401@SR-1305\waysde_rdi_typ.dgn
DGN\US 401 PDLegs

PROJECT REFERENCE NO.	SHEET NO.
W-5208J	2-D
R/W SHEET NO.	

5-30-14

DIVISION DESIGN / CONSTRUCT ENGINEER

TYPICAL SECTION NO. 15

-L MED- STA. 39+16.95 TO 43+90.26

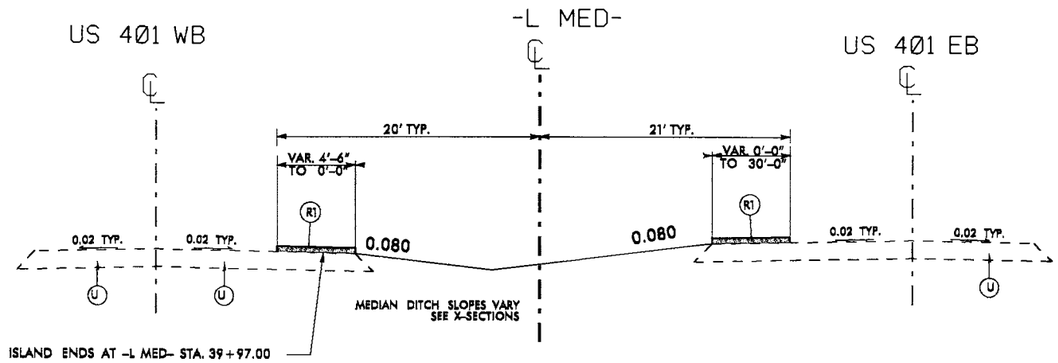

TYPICAL SECTION NO. 16

-L MED- STA. 44+29.00 TO 44+64.34

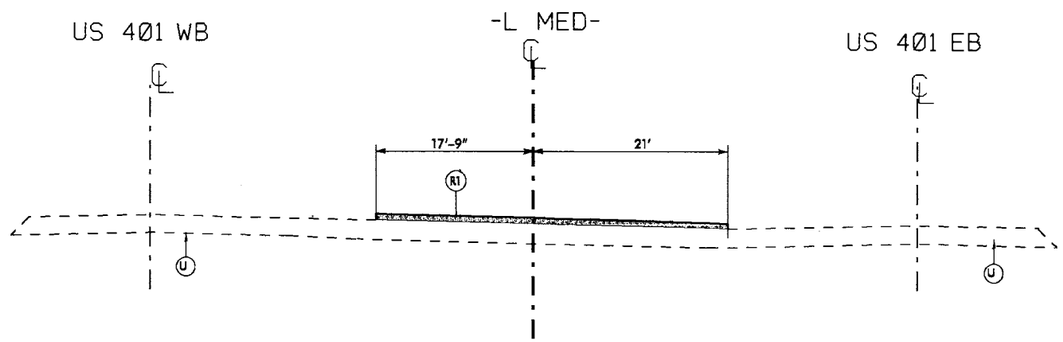

TYPICAL SECTION NO. 17

-L MED- STA. 43+12.80 TO 43+90.00
-L MED- STA. 44+64.34 TO 44+97.75

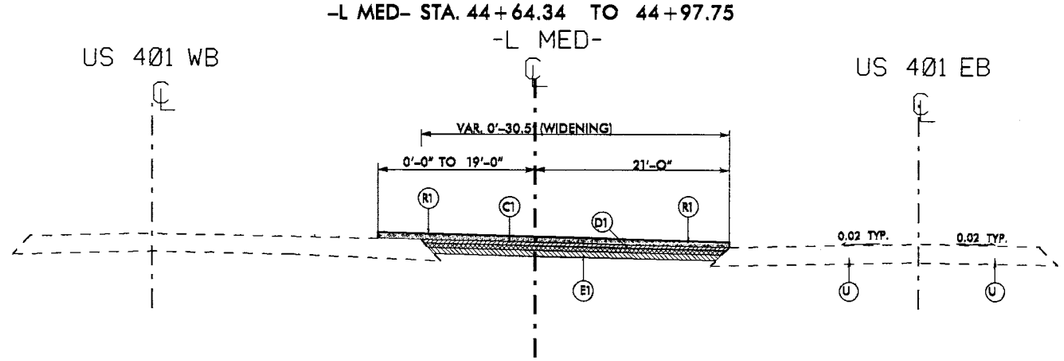

PAVEMENT SCHEDULE

C1	PROP. APPROX. 3" ASPHALT CONCRETE SURFACE COURSE, TYPE S9.5B, AT AN AVERAGE RATE OF 168 LBS. PER SQ. YD. PER 1½" DEPTH. TO BE PLACED IN TWO LAYERS.
C2	PROP. APPROX. 1.5" ASPHALT CONCRETE SURFACE COURSE, TYPE S9.5B, AT AN AVERAGE RATE OF 168 LBS. PER SQ. YD.
D1	PROP. APPROX. 4" ASPHALT CONCRETE INTERMEDIATE COURSE, TYPE I19.B, AT AN AVERAGE RATE OF 456 LBS. PER SQ. YD.
E1	PROP. APPROX. 5.5" ASPHALT CONCRETE BASE COURSE, TYPE B25.B, AT AN AVERAGE RATE OF 627 LBS. PER SQ. YD.
R1	5" MONOLITHIC CONCRETE ISLAND. (SURFACE MOUNTED)
T	EARTH MATERIAL.
U	EXISTING PAVEMENT.
V1	0" TO 1.5" MILLING

NOTE: PAVEMENT EDGE SLOPES ARE 1:1 UNLESS SHOWN OTHERWISE.

REVISIONS

8/17/99

29-MAY-2014 14:13
r:\roadway\proj\HOKE\rc4010sr_1305\wayside_rd\psh\us401@SR-1305(wayside_rd)_typ.dgn
$$$$USER$$ PROPOSED 0/0/2/0/0/0

PROJECT REFERENCE NO.	SHEET NO.
W-5208J	2-E
R/W SHEET NO.	

5-30-14

NORTH CAROLINA PROFESSIONAL SEAL 26930 ENGINEER

DIVISION DESIGN / CONSTRUCT ENGINEER

TYPICAL SECTION NO. 18
-L MED- STA. 44+97.75 TO 48+94.67

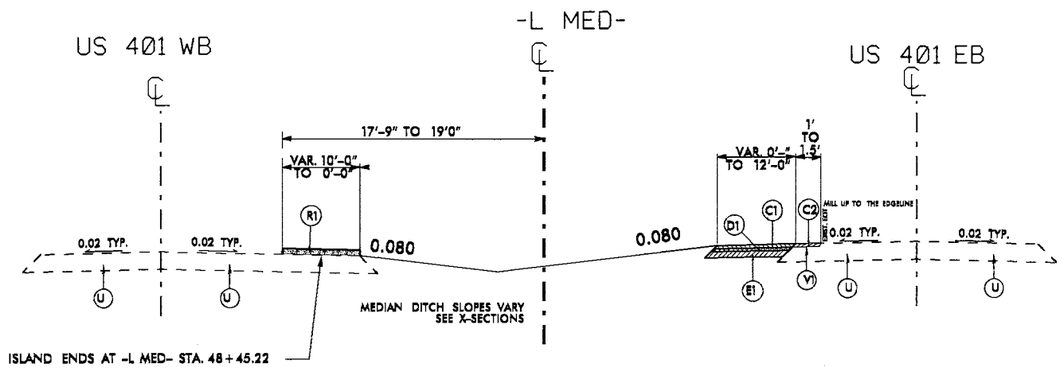

TYPICAL SECTION NO. 19
-L MED- STA. 48+94.67 TO 49+40.00

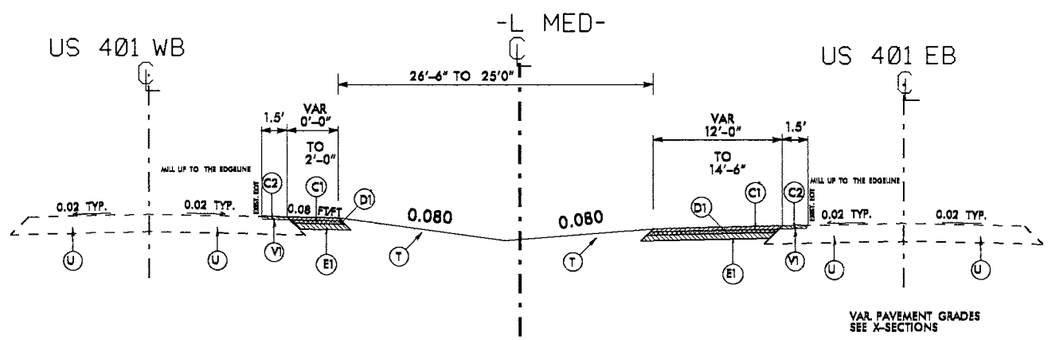

TYPICAL SECTION NO. 20
-L MED- STA. 49+40.00 TO 52+59.87

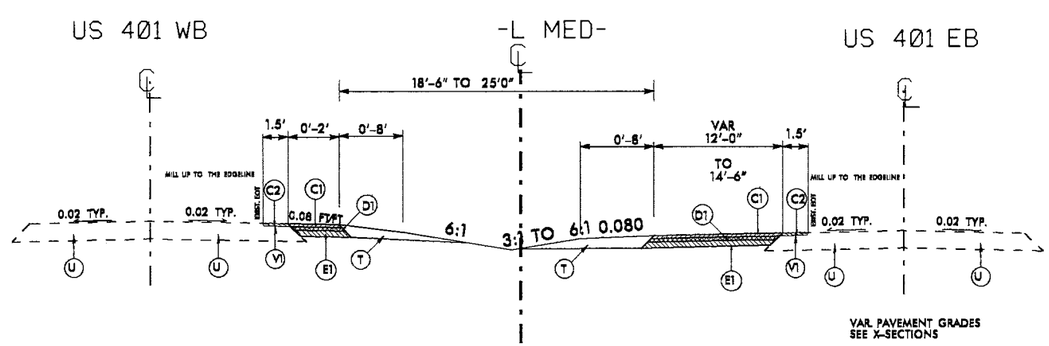

PAVEMENT SCHEDULE

C1	PROP. APPROX. 3" ASPHALT CONCRETE SURFACE COURSE, TYPE S9.5B, AT AN AVERAGE RATE OF 168 LBS. PER SQ. YD. PER 1½" DEPTH. TO BE PLACED IN TWO LAYERS.
C2	PROP. APPROX. 1.5" ASPHALT CONCRETE SURFACE COURSE, TYPE S9.5B, AT AN AVERAGE RATE OF 168 LBS. PER SQ. YD.
D1	PROP. APPROX. 4" ASPHALT CONCRETE INTERMEDIATE COURSE, TYPE I19.B, AT AN AVERAGE RATE OF 456 LBS. PER SQ. YD.
E1	PROP. APPROX. 5.5" ASPHALT CONCRETE BASE COURSE, TYPE B25.B, AT AN AVERAGE RATE OF 627 LBS. PER SQ. YD.
R1	5" MONOLITHIC CONCRETE ISLAND. (SURFACE MOUNTED)
T	EARTH MATERIAL.
U	EXISTING PAVEMENT.
V1	0" TO 1.5" MILLING

NOTE: PAVEMENT EDGE SLOPES ARE 1:1 UNLESS SHOWN OTHERWISE.

REVISIONS

8/17/99

29-MAY-2014 14:13
C:\div8_projects\rdu\HOKE\nc401&sr_1305\wayside_rd\psh\us401&SR-1305\wayside_rd_typ.dgn

PROJECT REFERENCE NO.	SHEET NO.
W-5208J	2-F
R/W SHEET NO.	

5-30-14

DIVISION DESIGN / CONSTRUCT ENGINEER

TYPICAL SECTION NO. 21
-L MED- STA. 52+59.87 TO 52+84.71

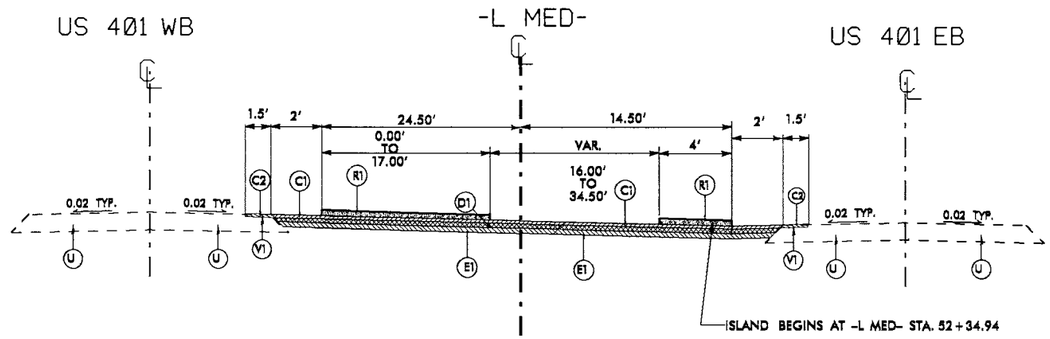

TYPICAL SECTION NO. 22
-L MED- STA. 52+84.71 TO 53+40.00

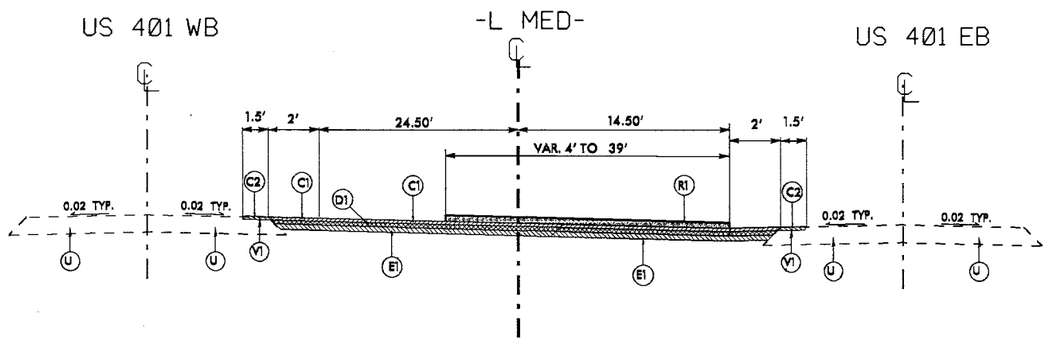

TYPICAL SECTION NO. 23
-L MED- STA. 53+40.00 TO 55+40.00

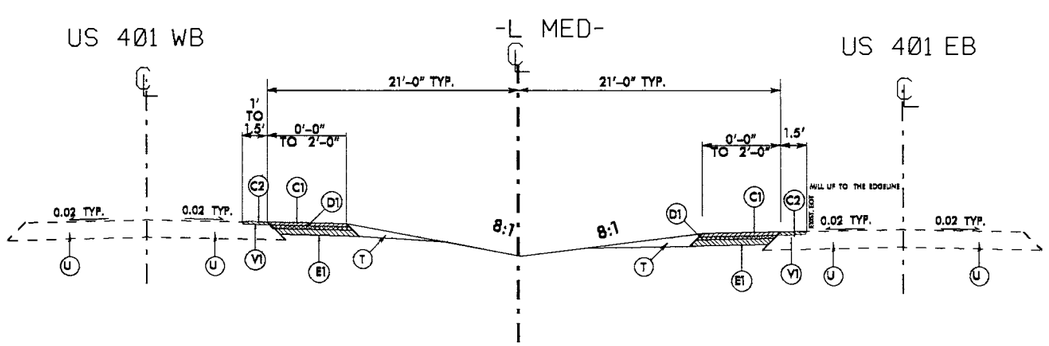

PAVEMENT SCHEDULE	
C1	PROP. APPROX. 3" ASPHALT CONCRETE SURFACE COURSE, TYPE S9.5B, AT AN AVERAGE RATE OF 166 LBS. PER SQ. YD. PER 1½" DEPTH. TO BE PLACED IN TWO LAYERS.
C2	PROP. APPROX. 1.5" ASPHALT CONCRETE SURFACE COURSE, TYPE S9.5B, AT AN AVERAGE RATE OF 166 LBS. PER SQ. YD.
D1	PROP. APPROX. 4" ASPHALT CONCRETE INTERMEDIATE COURSE, TYPE I19.B, AT AN AVERAGE RATE OF 456 LBS. PER SQ. YD.
E1	PROP. APPROX. 5.5" ASPHALT CONCRETE BASE COURSE, TYPE B25.B, AT AN AVERAGE RATE OF 627 LBS. PER SQ. YD.
R1	5" MONOLITHIC CONCRETE ISLAND. (SURFACE MOUNTED)
T	EARTH MATERIAL.
U	EXISTING PAVEMENT.
V1	0" TO 1.5" MILLING

NOTE: PAVEMENT EDGE SLOPES ARE 1:1 UNLESS SHOWN OTHERWISE.

TYPICAL SECTION NO. 24
-L MED- STA. 43+42.46 TO 55+40.00 LT

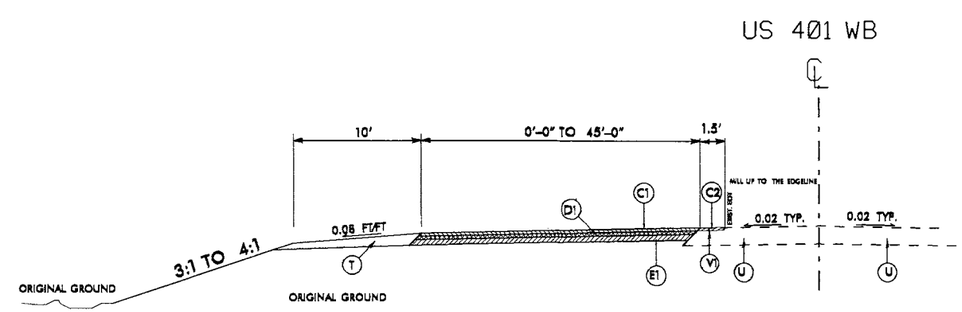

REVISIONS

8/17/99

28-MAY-2014 16:30
r:\proj\4297\rdy\HOKE\nc401&sr-1305\wayside_rd\ps\us401&SR-1305\wayside_rd_typ.dgn

PROJECT REFERENCE NO.	SHEET NO.
W-5208J	2-G
R/W SHEET NO.	

5-30-14

DIVISION DESIGN / CONSTRUCT ENGINEER

TYPICAL SECTION NO. 25
-Y3- STA. 10+51.70 TO 15+16.19

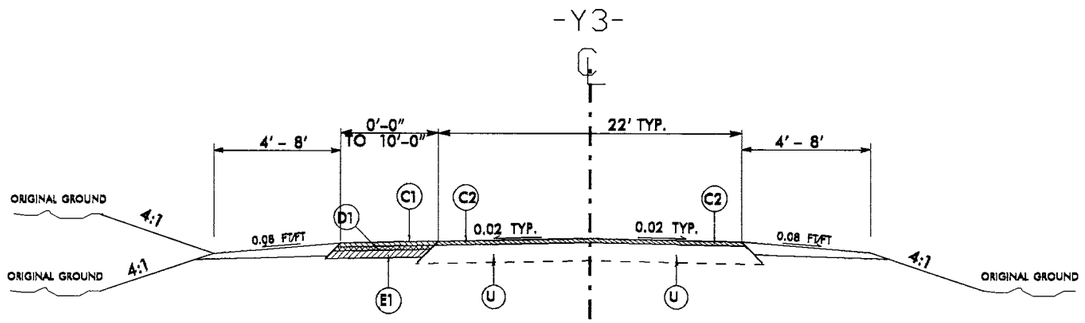

TYPICAL SECTION NO. 26
-Y3- STA. 15+16.19 TO 20+20.00

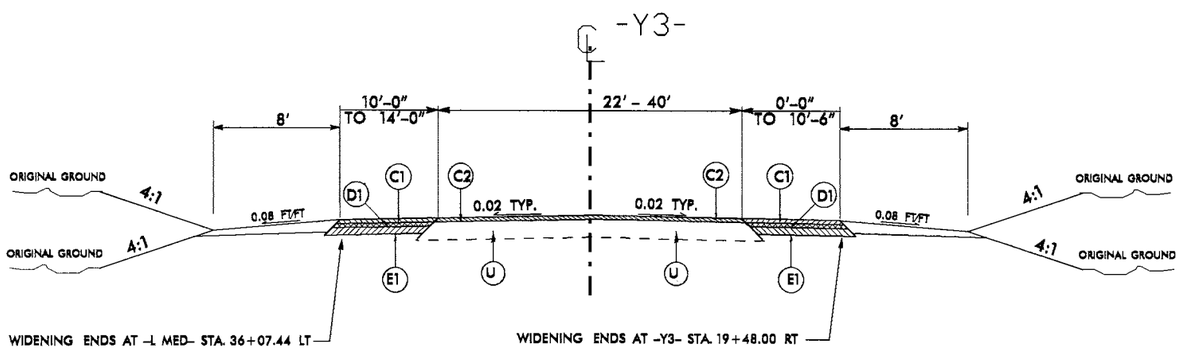

PAVEMENT SCHEDULE

C1	PROP. APPROX. 3" ASPHALT CONCRETE SURFACE COURSE, TYPE S9.5B, AT AN AVERAGE RATE OF 168 LBS. PER SQ. YD. PER 1½" DEPTH. TO BE PLACED IN TWO LAYERS.
C2	PROP. APPROX. 1.5" ASPHALT CONCRETE SURFACE COURSE, TYPE S9.5B, AT AN AVERAGE RATE OF 168 LBS. PER SQ. YD.
D1	PROP. APPROX. 4" ASPHALT CONCRETE INTERMEDIATE COURSE, TYPE I19.B, AT AN AVERAGE RATE OF 456 LBS. PER SQ. YD.
E1	PROP. APPROX. 5.5" ASPHALT CONCRETE BASE COURSE, TYPE B25.B, AT AN AVERAGE RATE OF 627 LBS. PER SQ. YD.
R1	5" MONOLITHIC CONCRETE ISLAND. (SURFACE MOUNTED)
T	EARTH MATERIAL.
U	EXISTING PAVEMENT.
V1	0" TO 1.5" MILLING

NOTE: PAVEMENT EDGE SLOPES ARE 1:1 UNLESS SHOWN OTHERWISE.

REVISIONS

8/17/99

28-MAY-2014 16:30
C:\Users\dbarnhill\Appdata\Local\Temp\HOKES\no4010sr_1305(wagside_rd)\psh\us4010SR-1305(wagside_rd)_typ.dgn

PROJECT REFERENCE NO.	SHEET NO.
W-5208J	2-H
R/W SHEET NO.	

ROADWAY DESIGN AND HYDRAULICS ENGINEER

5-30-14

NORTH CAROLINA PROFESSIONAL SEAL 26930 ENGINEER GREG S. DAVIS

DIVISION DESIGN / CONSTRUCT ENGINEER

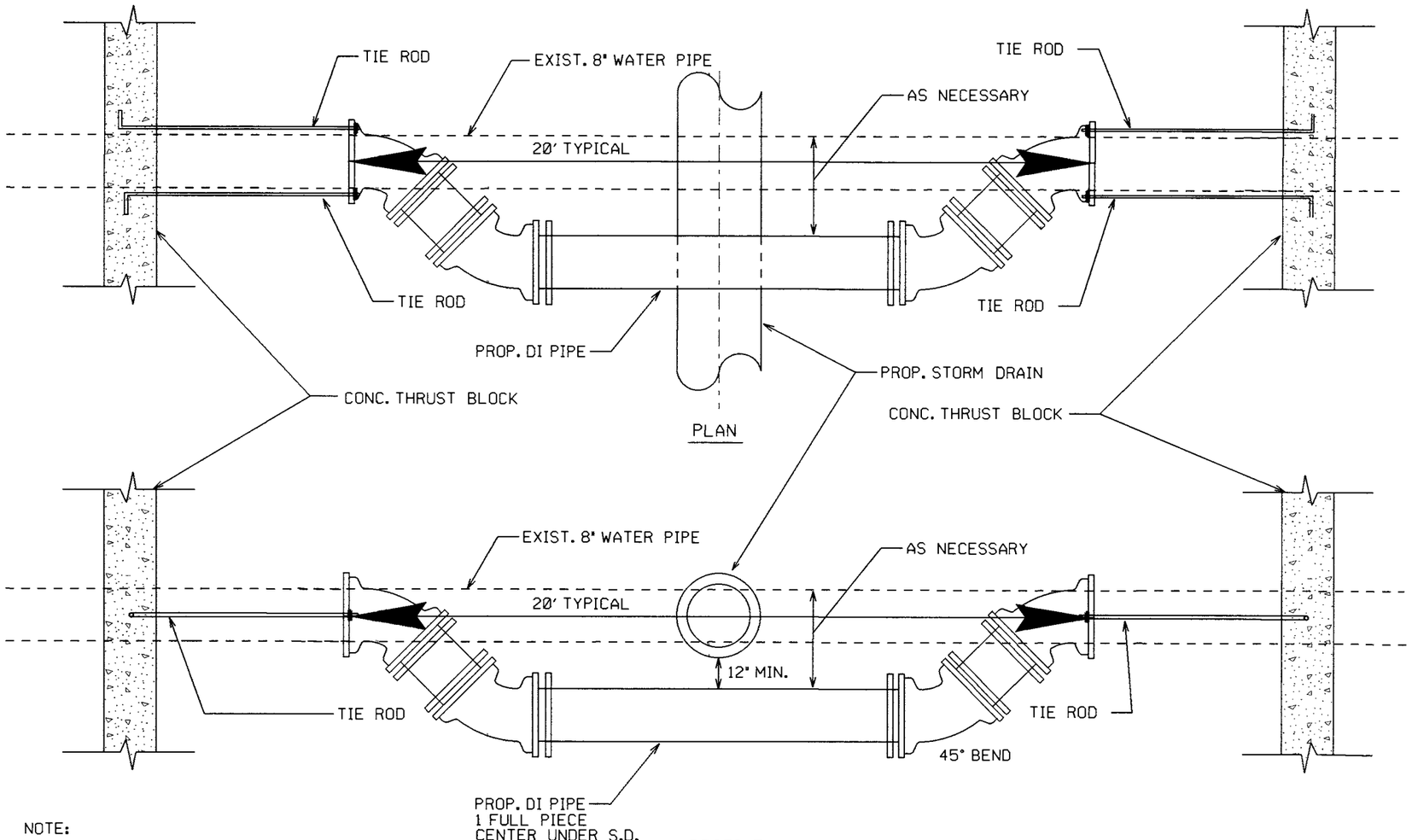

NOTE:

1. FITTINGS SHALL BE RESTRAINED BY USING TIE RODS OR OTHER METHOD AS APPROVED BY ENGINEER.
2. CONC. THRUST BLOCK SHALL BE PLACED AND CURED THREE DAYS PRIOR TO CUTTING EXISTING PIPE.

*NTS

RELOCATION OF 8" WATER PIPE AT PROP. STORM DRAINAGE AS SHOWN ON PLANS

REVISIONS

8/17/99

28-MAY-2014 13:20
c:\div8_orig_pc15\rdu\HOKE\nc4210sr_1305\wayside_rdl\psh\water_drop.dgn
resolve AT DBF ON (5-27-2014)

D8CAD221432

COMPUTED BY: DDC	DATE: 12/31/2013
CHECKED BY: GSD	DATE: 1/3/2014

PROJECT NO.	SHEET NO.
W-5208J	3

STATE OF NORTH CAROLINA
DIVISION OF HIGHWAYS

SUMMARY OF EARTHWORK

Station	Station	Uncl. Excav.	Embank. +%	Borrow	Waste
-L Med- 16+00	-L Med- 34+20	801	1098	297	
-L Med- 35+60	-L Med- 43+40	37	361	324	
-L Med- 44+80	-L Med- 55+40	467	2070	1603	
-Y3- 10+60	-Y3- 20+20514		161		353
SUBTOTALS:		1819	3690	2224	353
Waste to Replace Borrow				-353	-353
Subtotal				1871	
EST. 5% TO REPLACE TOPSOIL ON BORROW PITS				94	
PROJECT TOTALS:		1819	0	1965	
GRAND TOTALS:		1819		1965	
SAY:		1820		1970	

NOTE:
Shoulder Material included in Embankment quantities listed

Approximate quantities only. Unclassified excavation, borrow excavation, fine grading, clearing and grubbing, silt excavation and removal of concrete pavement will be paid for at the lump sum price for "Grading".

SUMMARY OF EXISTING CONCRETE PAVEMENT REMOVAL

LINE	Station	Station	LOC LT/RT/CL	FT^2
-Y3-	19+00	20+34	CL	933.88
-Y3-	17+40	18+15	RT	1206.12
			TOTAL:	2140.00
			SAY:	2140

RD1030/C

COMPUTED BY: DDC DATE: 12/31/2013

CHECKED BY: GSD DATE: 1/3/2013

STATE OF NORTH CAROLINA
DIVISION OF HIGHWAYS

PROJECT NO.	SHEET NO.
W-5208J	3-A

LIST OF PIPES, ENDWALLS, ETC. (FOR PIPES 48" & UNDER)

STATION	LOCATION (LT, RT, OR CL)	STRUCTURE NO. FROM	STRUCTURE NO. TO	TOP ELEVATION	INVERT ELEVATION	INVERT ELEVATION	SLOPE CRITICAL	CLASS III R.C. PIPE (UNLESS NOTED OTHERWISE) 12"	15"	18"	24"	30"	36"	42"	48"	CLASS IV R.C. PIPE (UNLESS NOTED OTHERWISE) 12"	15"	18"	24"	30"	36"	42"	48"	15" SIDE DRAIN PIPE	18" SIDE DRAIN PIPE	24" SIDE DRAIN PIPE	ENDWALLS STD. 838.01 OR STD. 838.11 (UNLESS NOTED OTHERWISE) CU. YARDS R.C.P.	C.S.P.	QUANTITIES FOR DRAINAGE STRUCTURES PER EACH (0' THRU 5.0')	*TOTAL L.F. FOR PAY QUANTITY SHALL BE COL. "A" * (1.3 X COL."B") LIN. FT. A 5.0' THRU 10.0'	B 10.0' AND ABOVE	C.B. STD. 840.01 OR STD. 840.02	FRAME, GRATES, AND HOOD STANDARD 840.03 TYPE OF GRATE E	F	G	D.I. STD. 840.14 OR STD. 840.15	D.I. FRAME AND 2 GRATE STD. 840.16	M.D.I. TYPE "A" STD. 840.17 OR 840.26	M.D.I. TYPE "B" STD. 840.18 OR 840.27	M.D.I. TYPE "D" STD. 840.19 OR 840.28	M.D.I. FRAME WITH GRATE STD. 840.20	M.D.I. FRAME WITH TWO GRATES STD. 840.22	M.D.I. (N.S.) FRAME WITH TWO GRATES STD. 840.24	M.D.I. (N.S.) FRAME WITH GRATE STD. 840.24	J.B. STD. 840.31 OR 840.32	MANHOLE STD. 840.51	M.H. STD. 840.51 OR 840.53	M.H. FRAME AND COVER STD. 840.54	ADJUST DI	CONCRETE TRANSITIONAL SECTION FOR DROP INLETS	CORR. STEEL ELBOWS NO. & SIZE	CONC. COLLARS CL. "B" C.Y. STD. 840.72	CONC. & BRICK PIPE PLUG, C.Y. STD. 840.71	PIPE REMOVAL LIN. FT.	REMARKS
THICKNESS OR GAUGE																																																						
-L Med- 23+30	LT	601			104.8	100.88												310																																			
-L Med- 24+00	CL	602	603	105.85													160												1				1					1															
-L Med- 25+60	CL	603	604	105.21													308												1				1	1															1					
-L Med- 28+68	CL	604		99.4																																													1					
'-L Med- 40+18	CL	801																																															1					
'-L Med- 42+86	CL	802																																															1					
'-L Med- 42+86	LT	901															48																																			32	
'-L Med- 49+66	CL	902																																															1					
-L Med- 52+40	CL	903	904	69.4													66												1				1					1															
-L Med- 53+00	CL	904	1001	69.37													168												1				1	1															1					
-L Med- 54+69	CL	1001																																															1					
-Y3- 11+50	RT	1101							4																																											0.5526			
-Y3- 17+40	RT	1102	701	99.47														200											1				1					1																	
-Y3- 19+40	RT	701	702	97.59														32											1				1					1																58	
-Y3- 19+40	RT	702																																																				
-Y3- 20+33	LT	703															8																																			0.399			
SHEET TOTALS									4	0	0			0			750	542	0										6				6	2				4											5			2					0.9516		90	

ABBREVIATIONS

C.B.	CATCH BASIN
N.D.I.	NARROW DROP INLET
D.I.	DROP INLET
M.D.I.	MEDIAN DROP INLET
M.D.I.(N.S.)	MEDIAN DROP INLET (NARROW SLOT)
J.B.	JUNCTION BOX
M.H.	MANHOLE
T.B.D.I.	TRAFFIC BEARING DROP INLET
T.B.J.B.	TRAFFIC BEARING JUNCTION BOX

PROJECT REFERENCE NO.	SHEET NO.
W-5208J	4
R/W SHEET NO.	

G.S. Davis
5-30-14

NORTH CAROLINA PROFESSIONAL SEAL 26930 ENGINEER GREG S. DAVIS

DIVISION DESIGN / CONSTRUCT ENGINEER

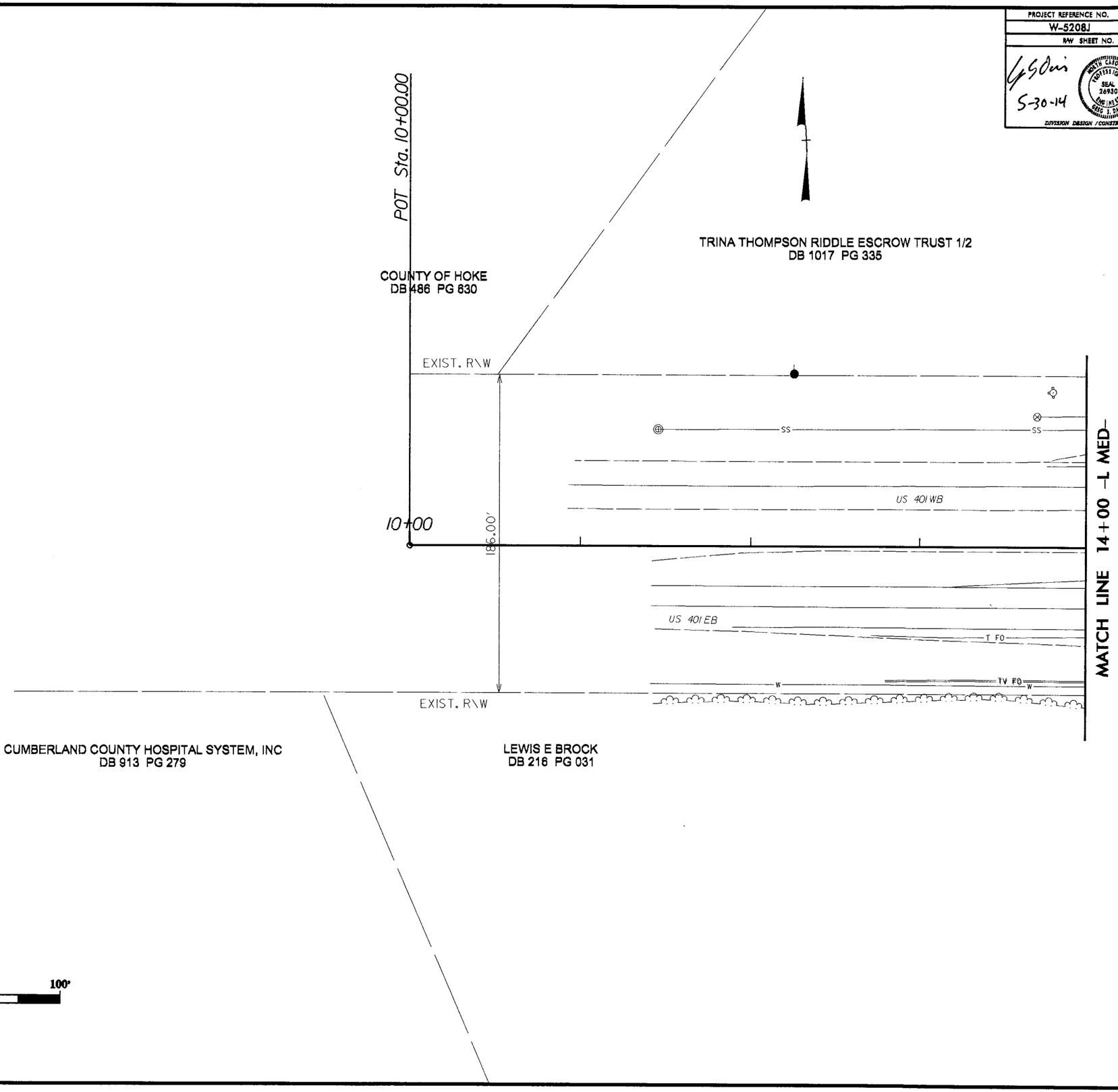

REVISIONS

8/17/99

29-MAY-2014 13:36
c:\dgn8_pw_wsdot\hoke\nc401esr_1305\wayside_rd1\psh\dsn\W-5208J_psh4.dgn
pedavis
$DGN=>70410

PROJECT REFERENCE NO.	SHEET NO.
W-5208J	5
R/W SHEET NO.	

G S Orin
5-30-14

NORTH CAROLINA PROFESSIONAL SEAL 24930 ENGINEER GREG S. ORIN

DIVISION DESIGN / CONSTRUCT ENGINEER

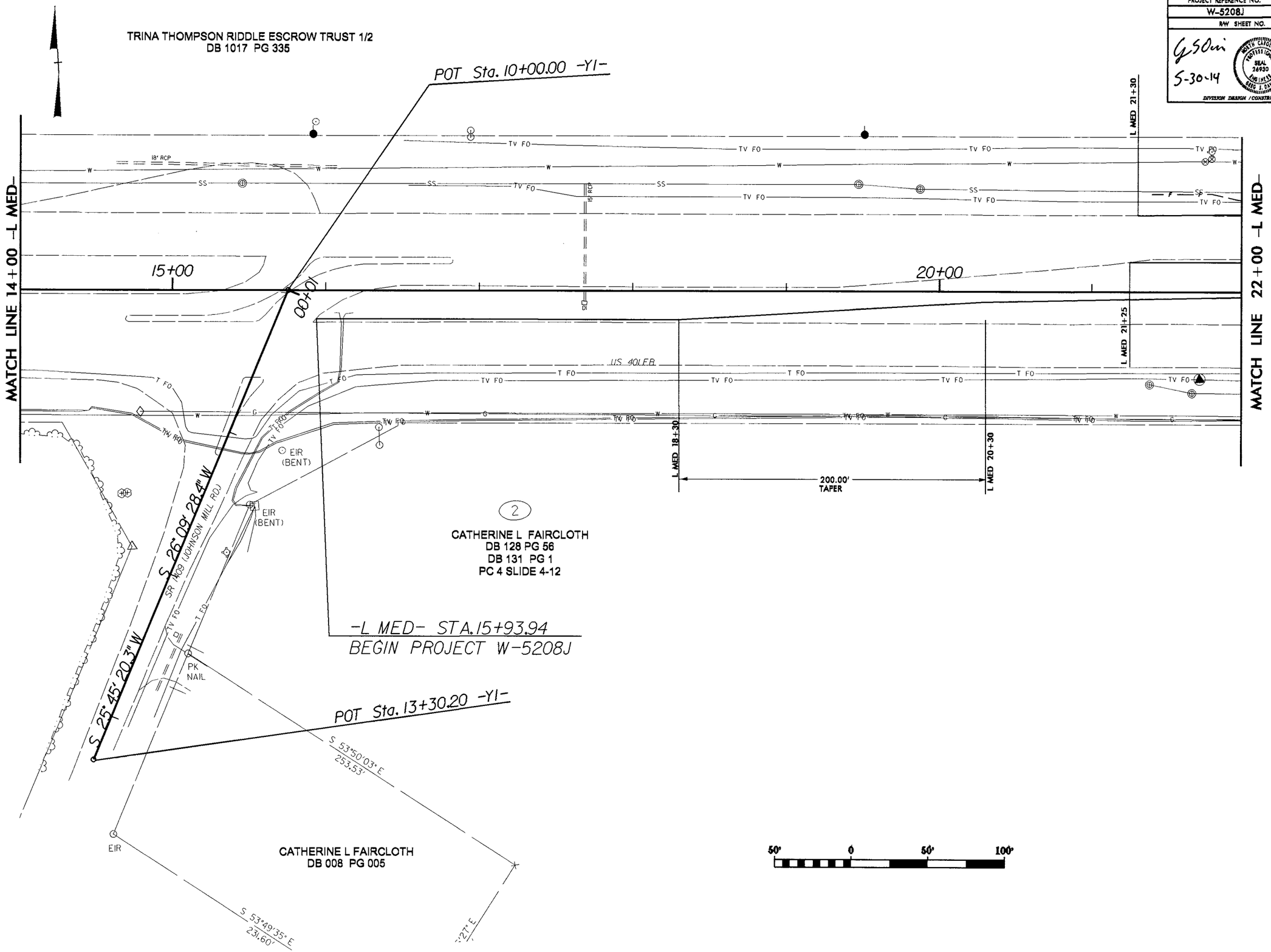

REVISIONS

8/17/99

28-MAY-2014 15:44
C:\Users\rdu\HOKE\vnc401esr_1305\wayside_rd\psh\dsn\W-5208J_psh5.dgn

PROJECT REFERENCE NO.	SHEET NO.
W-5208J	6
R/W SHEET NO.	

5-30-14
DIVISION DESIGN / CONSTRUCT ENGINEER

REVISIONS

8/17/99

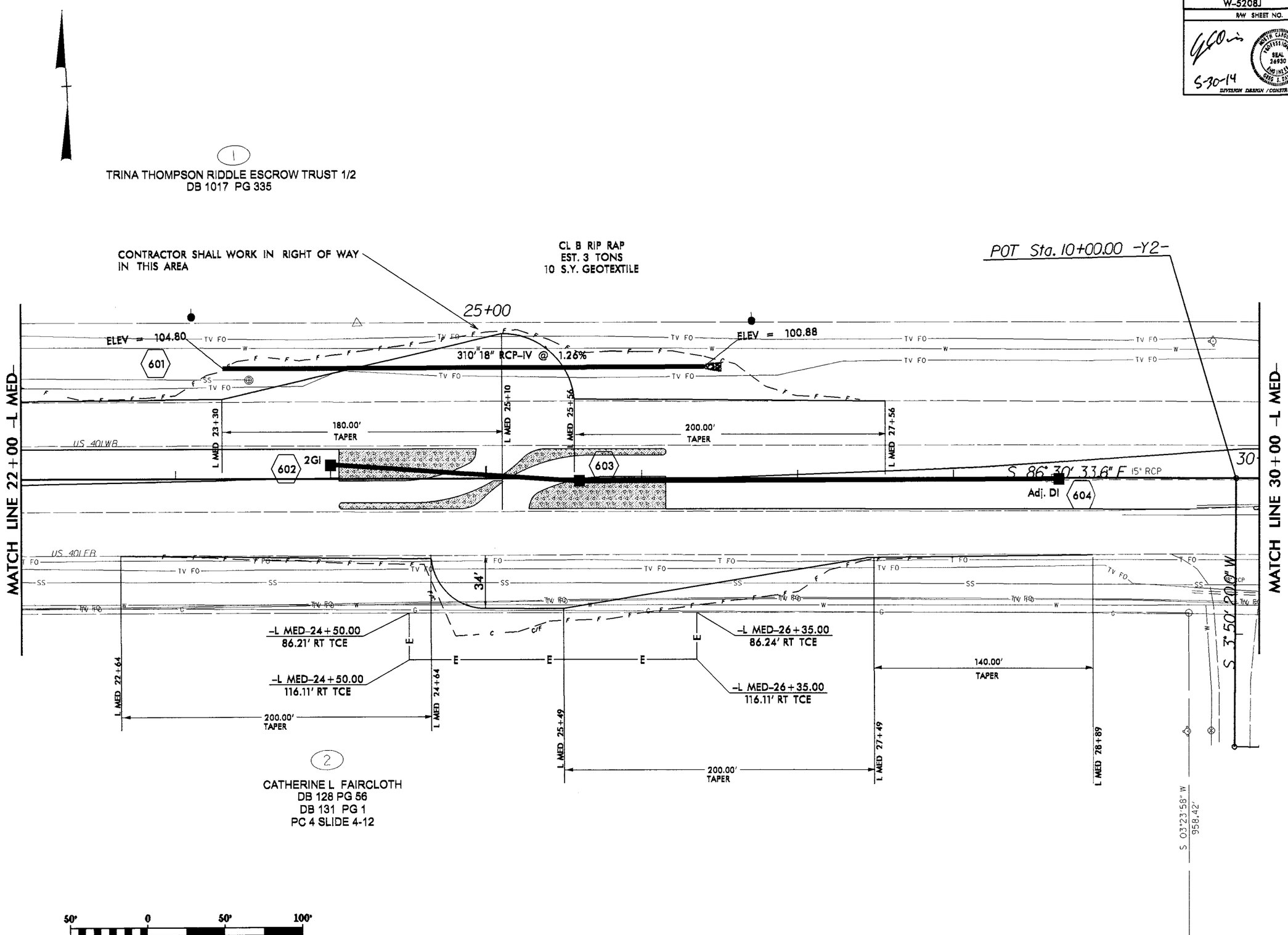

12-JUN-2014 10:46
C:\div8-projects\rdyHOKE\nc401esr_1305lwayside_rd\psh\dsn\W-5208J_psh6.dgn

PROJECT REFERENCE NO.	SHEET NO.
W-5208J	6-A
R/W SHEET NO.	

G.S. Ouis
5-30-14

NORTH CAROLINA PROFESSIONAL SEAL 24930 ENGINEER GREG S. OUIS

DIVISION DESIGN / CONSTRUCT ENGINEER

NOTE: CONTRACTOR SHALL COORDINATE THE INSTALLATION OF SIGN POST HOLES IN CONCRETE ISLANDS WITH DIVISION 8 TRAFFIC SERVICES UNIT. REFER TO ROADWAY STANDARDS NOs. 901 THRU 904. SIGN HOLES SHALL EXTEND THROUGH PAVEMENT TO NATURAL GROUND.

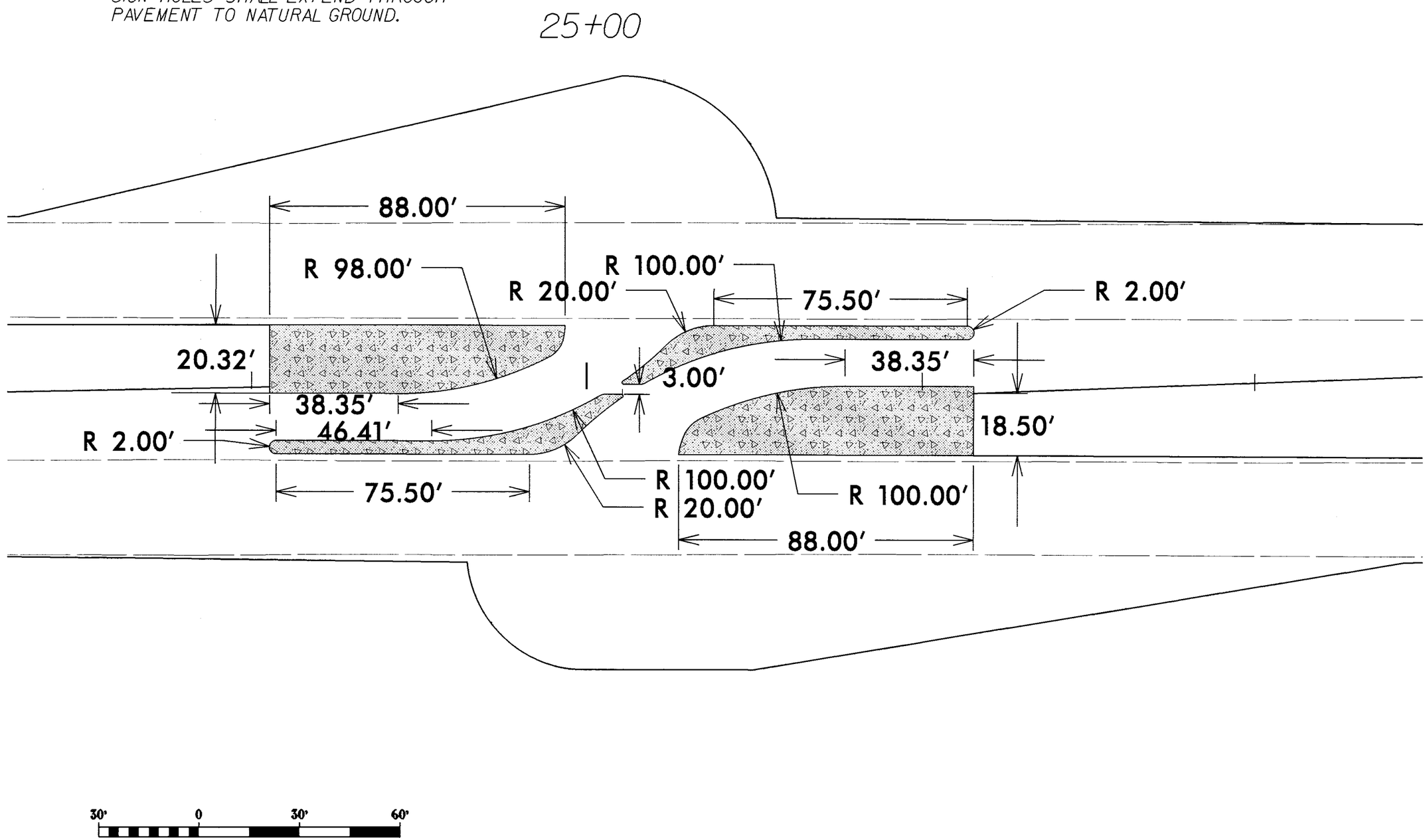

REVISIONS

8/17/99

28-MAY-2014 15:48
r:\roadway\proj\HOKE\mc4018sr_13051wayside_rd\psh\dsn\W-5208J_psh6-A.dgn

PROJECT REFERENCE NO.	SHEET NO.
W-5208J	7
R/W SHEET NO.	

G. Soins
5-30-14

NORTH CAROLINA PROFESSIONAL SEAL 24930 ENGINEER GREG I. SOINS

DIVISION DESIGN / CONSTRUCT ENGINEER

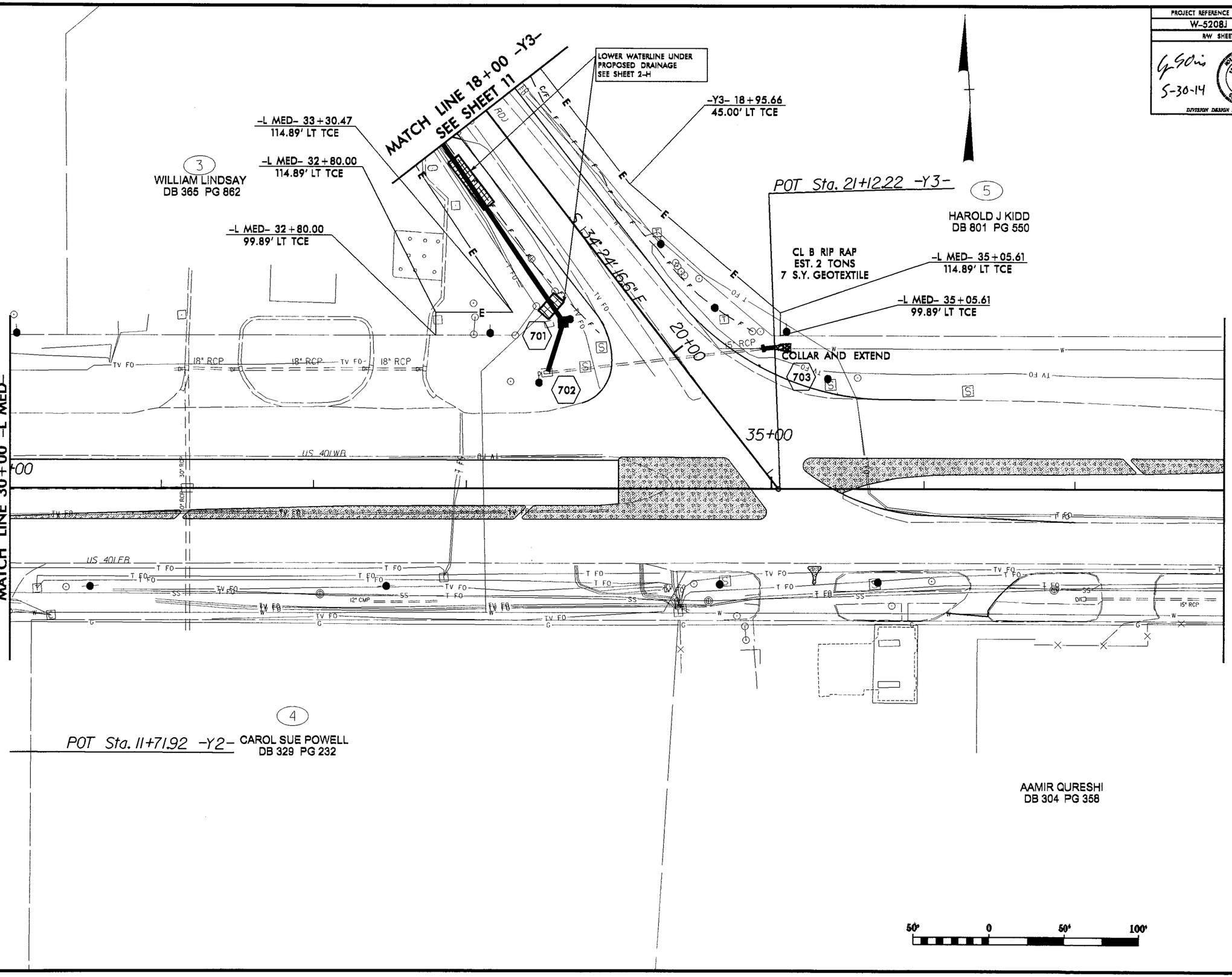

REVISIONS

8/17/99

28-MAY-2014 15:14
c:\pw_work\pw_ecs\rrdu\HOKEY\ne401esr_1305\wayside_rd\psh\dgn\W-5208J_psh7.dgn

PROJECT REFERENCE NO.	SHEET NO.
W-5208J	7-A
R/W SHEET NO.	

G S Oni
5-30-14

NORTH CAROLINA PROFESSIONAL SEAL 24930 ENGINEER GREG T. OLIVER

DIVISION DESIGN / CONSTRUCT ENGINEER

NOTE: CONTRACTOR SHALL COORDINATE THE INSTALLATION OF SIGN POST HOLES IN CONCRETE ISLANDS WITH DIVISION 8 TRAFFIC SERVICES UNIT. REFER TO ROADWAY STANDARDS NOs. 901 THRU 904. SIGN HOLES SHALL EXTEND THROUGH PAVEMENT TO NATURAL GROUND.

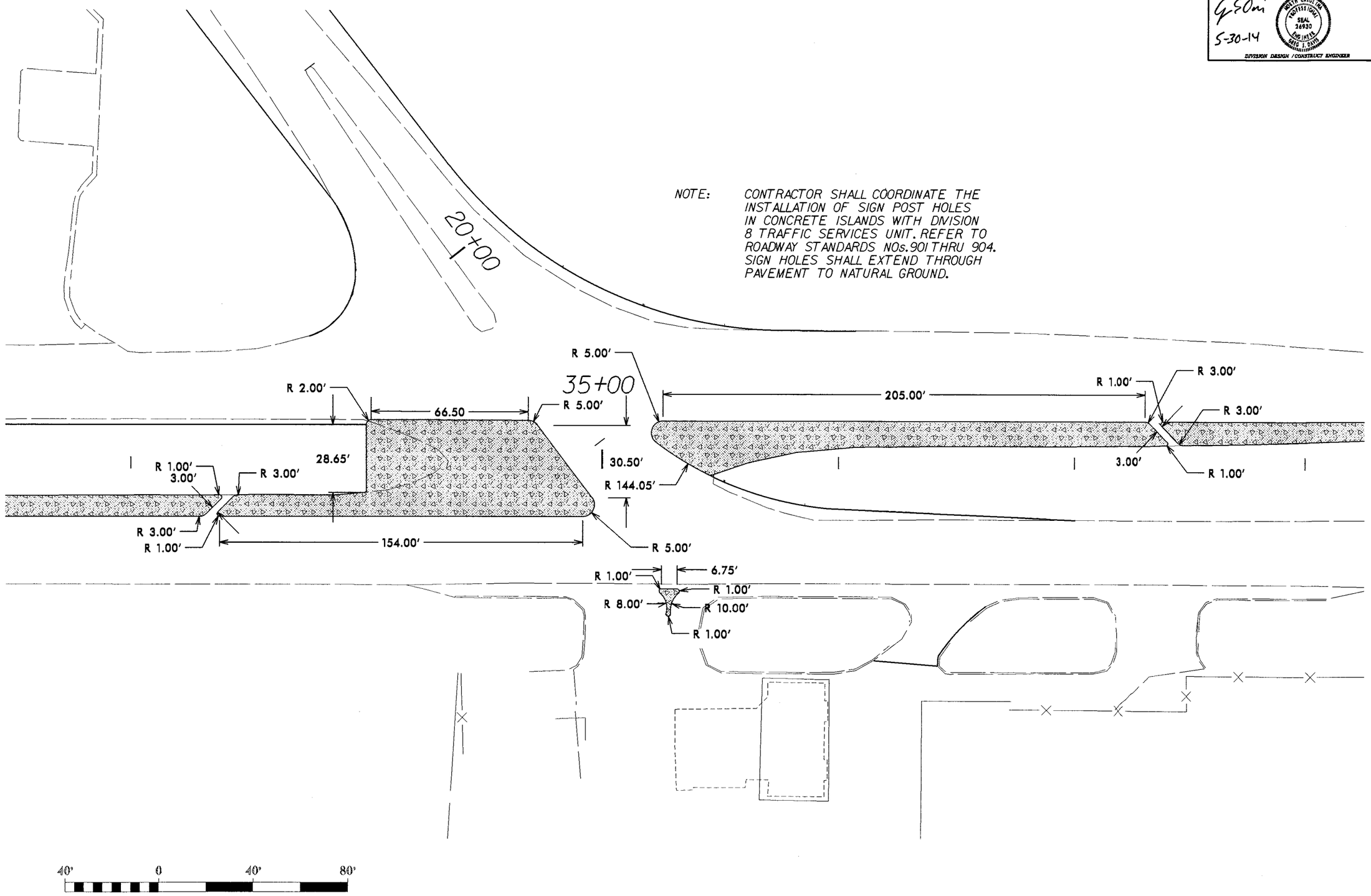

REVISIONS

8/17/99

28-MAY-2014 15:39
r:\roadway\proj\HOKE\mc4016sr_1305\wysiwyg\side_rd\psh\dsn\W-5208J_psh7A.dgn

PROJECT REFERENCE NO.	SHEET NO.
W-5208J	8
R/W SHEET NO.	

5-30-14

DIVISION DESIGN / CONSTRUCT ENGINEER

REVISIONS

8/17/99

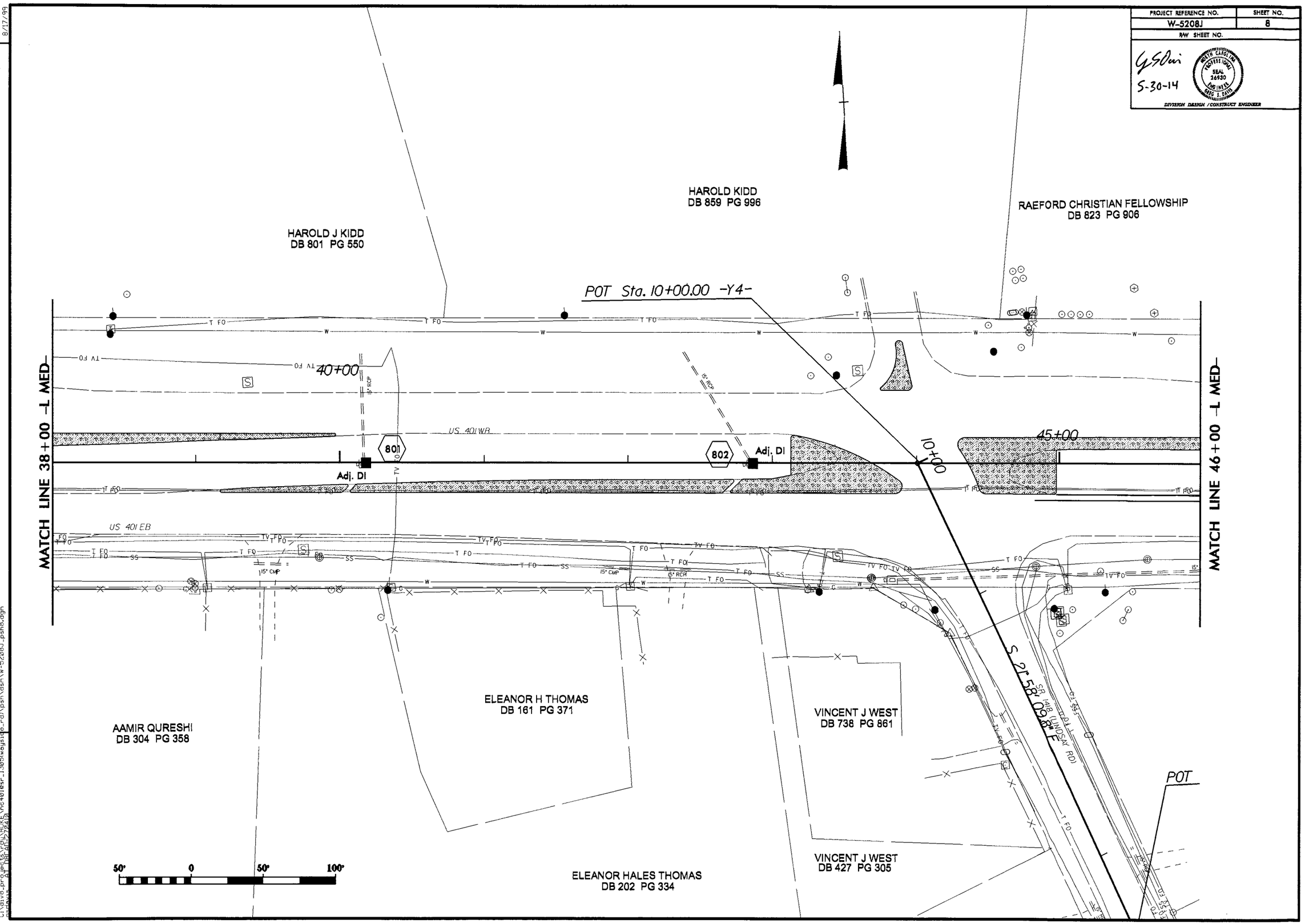

28-MAY-2014 15:44
C:\div8_proj\em8_proj\HOKE\nc401sr_1305(wayside_rd)\psh\dgn\W-5208J_psh8.dgn

PROJECT REFERENCE NO.	SHEET NO.
W-5208J	8-A
R/W SHEET NO.	

5-30-14

SEAL 26930 ENGINEER GREG J. DAVIS NORTH CAROLINA PROFESSIONAL

DIVISION DESIGN / CONSTRUCT ENGINEER

NOTE: CONTRACTOR SHALL COORDINATE THE INSTALLATION OF SIGN POST HOLES IN CONCRETE ISLANDS WITH DIVISION 8 TRAFFIC SERVICES UNIT. REFER TO ROADWAY STANDARDS NOs. 901 THRU 904. SIGN HOLES SHALL EXTEND THROUGH PAVEMENT TO NATURAL GROUND.

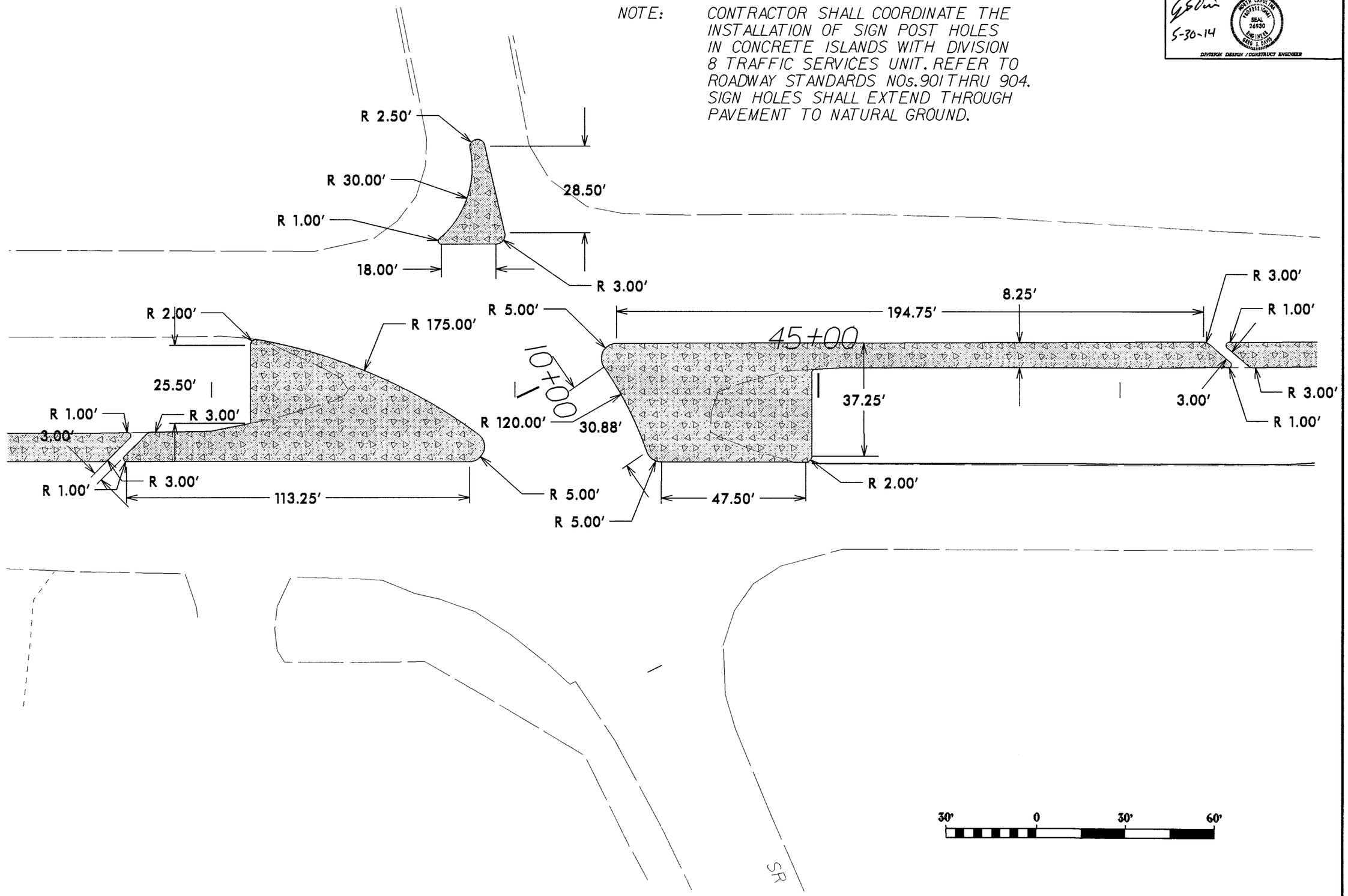

REVISIONS

8/17/99

28-MAY-2014 15:39
s:\dsn\9_projects\hoke\nc401esr-1305\wayside_rd\psh\dsn\W-5208J_psh8A.dgn

PROJECT REFERENCE NO.	SHEET NO.
W-5208J	9
R/W SHEET NO.	

G.S.Ow
5-30-14

NORTH CAROLINA PROFESSIONAL SEAL 26930 ENGINEER GREG A. OWEN

DIVISION DESIGN / CONSTRUCT ENGINEER

8/17/99

REVISIONS

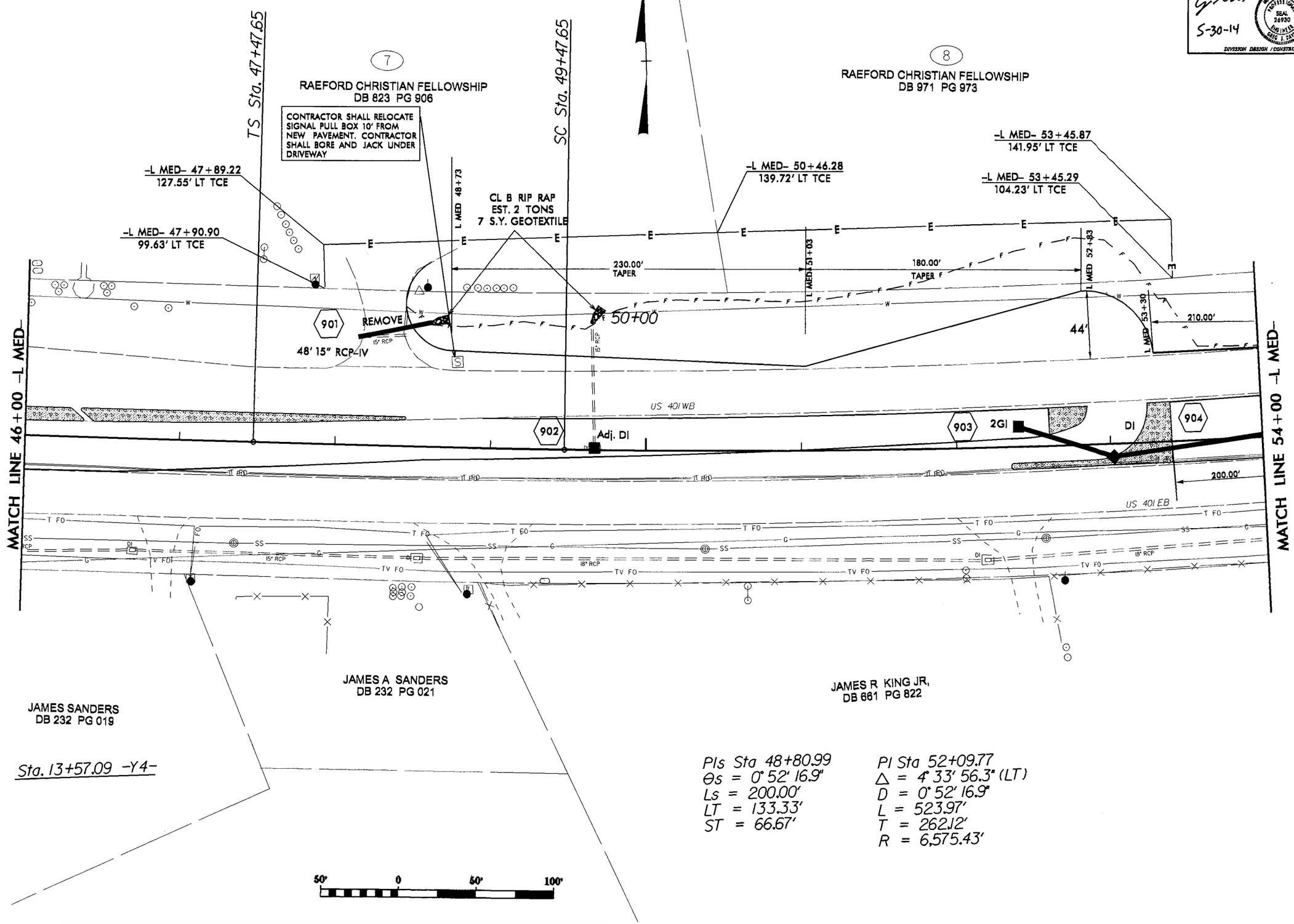

28-MAY-2014 15:44
r:\div8_proj\ncdot\HOKE\nc4018sr_13051\wgsidegrd\psh\dsn\W-5208J_psh9.dgn

PROJECT REFERENCE NO.	SHEET NO.
W-5208J	9-A
R/W SHEET NO.	

5-30-14

NORTH CAROLINA PROFESSIONAL SEAL 24930 ENGINEER GREG J. DAVIS

DIVISION DESIGN / CONSTRUCT ENGINEER

REVISIONS

8/17/99

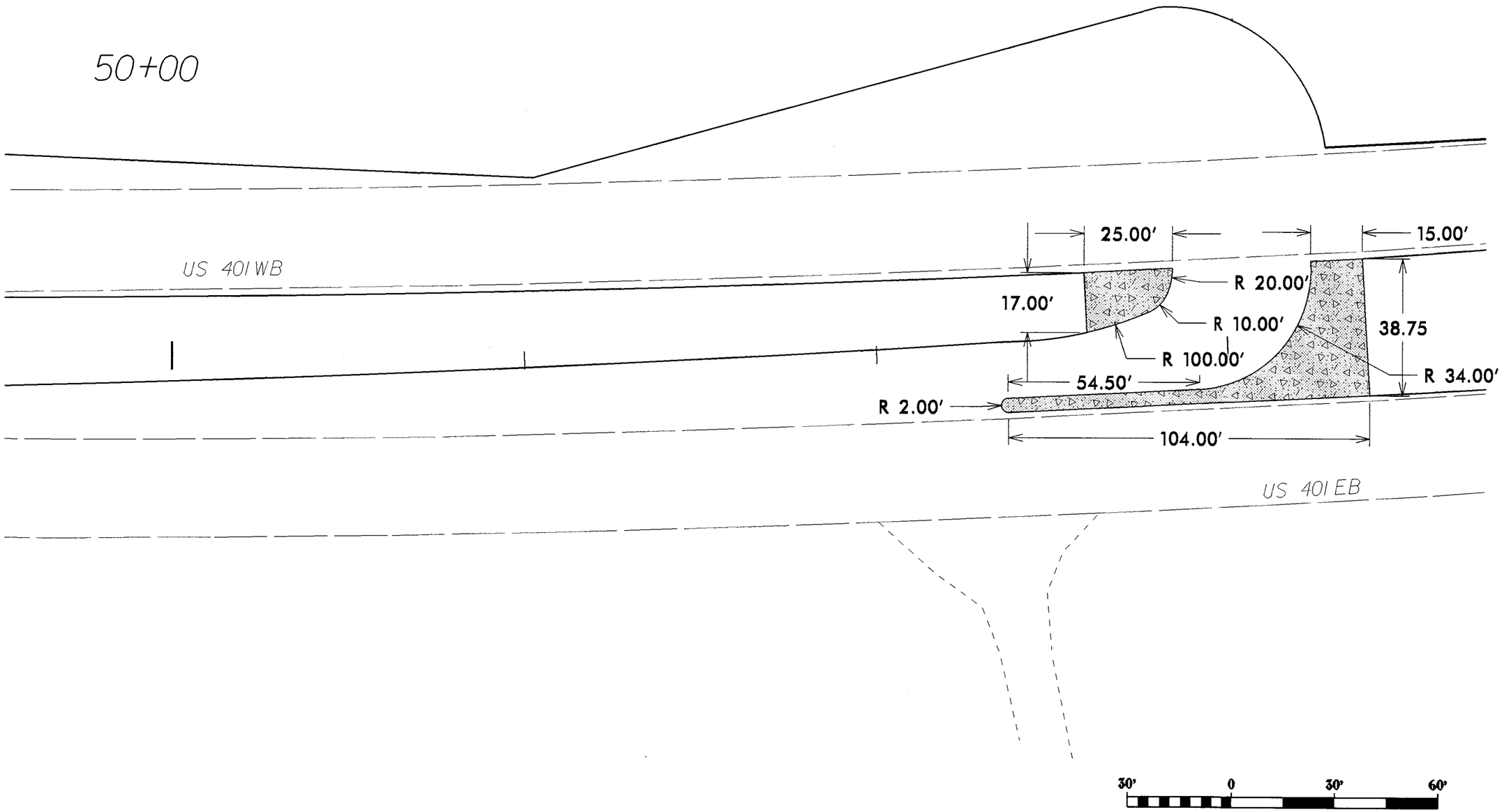

28-MAY-2014 15:33
C:\pw_pro\projects\rdu\HOKES\nc401sr_13051\mgsidg_rd\psh\dgn\W-5208J_psh9A.dgn

PROJECT REFERENCE NO.	SHEET NO.
W-5208J	10
R/W SHEET NO.	

G.S.Oui
5-30-14

NORTH CAROLINA PROFESSIONAL SEAL 24920 ENGINEER GREG I. SAYRE

DIVISION DESIGN / CONSTRUCT ENGINEER

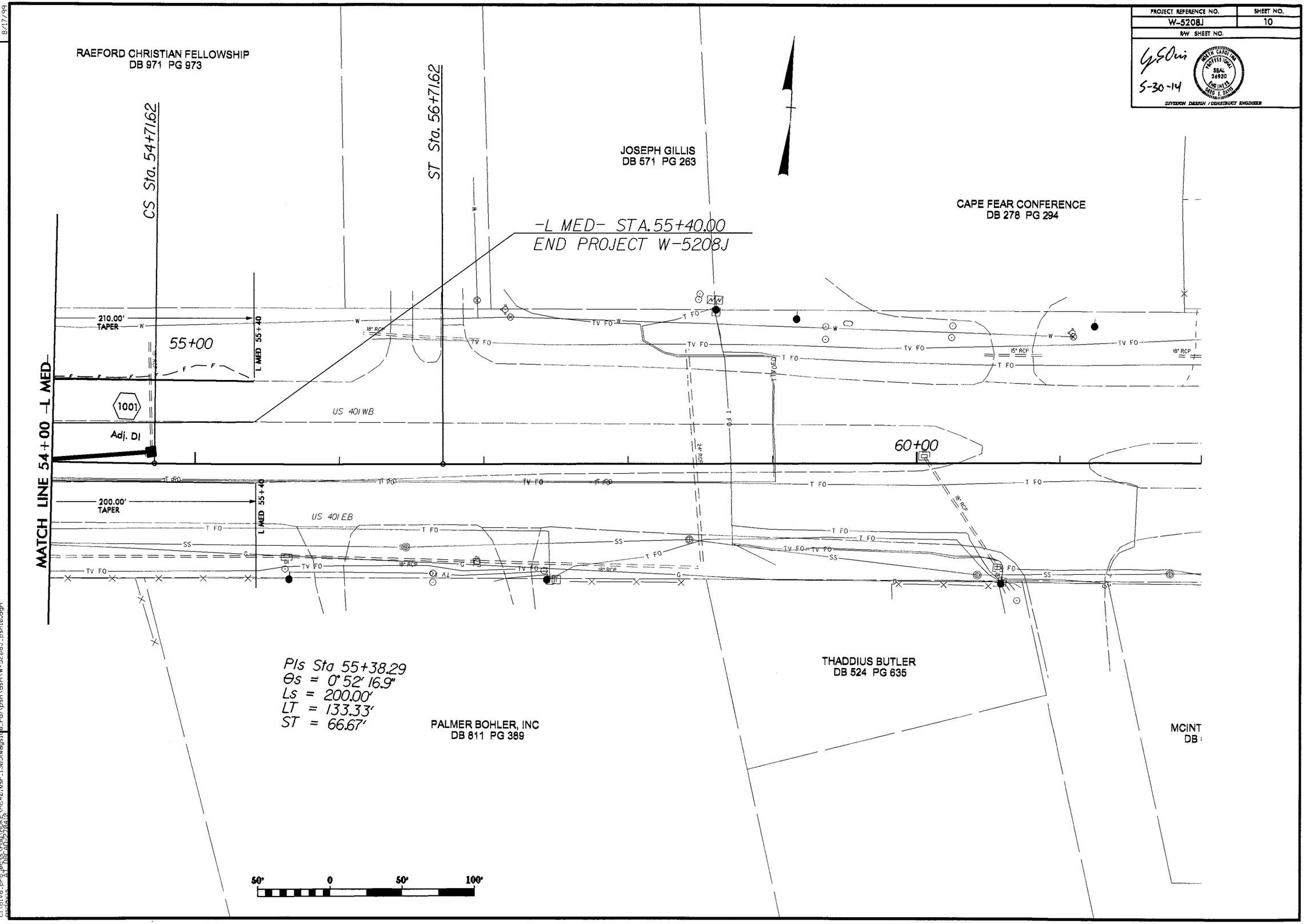

REVISIONS

8/17/99

28-MAY-2014 15:44
C:\Users\gsayre\AppData\Local\Temp\HOKE\rc-4018sr_1305\wayside_rd1\psh\dgn\W-5208J_psh10.dgn

PROJECT REFERENCE NO.	SHEET NO.
W-5208J	11
R/W SHEET NO.	

5-30-14

NORTH CAROLINA PROFESSIONAL SEAL 26930 ENGINEER GREG J. DAVIS

DIVISION DESIGN / CONSTRUCT ENGINEER

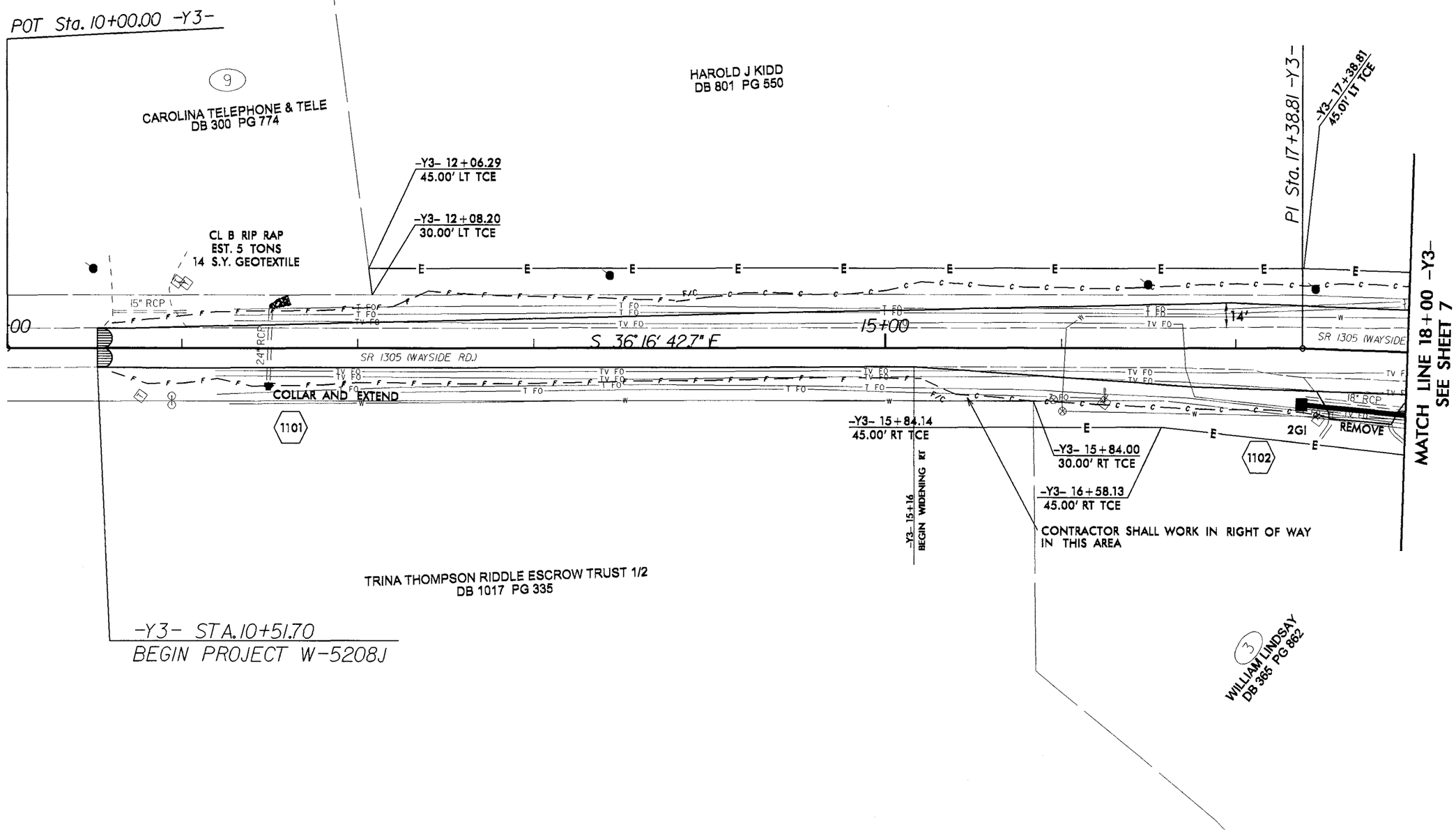

REVISIONS

8/17/99

12-JUN-2014 10:46
C:\div8-proj\ecs\rdy\HOKE\nc401sr_1305\wayside_rd\psh\dsn\W-5208J_pshi1.dgn

PROJECT REFERENCE NO.	SHEET NO.
W-5208J	PMP-1
R/W SHEET NO.	

G S Ow
5-30-14

NORTH CAROLINA PROFESSIONAL SEAL 24930 ENGINEER GREG T. SAYRS

DIVISION DESIGN / CONSTRUCT ENGINEER

PAVEMENT MARKING LEGEND

- ◨ --CRYSTAL / RED PAVEMENT MARKER
- ◆ --YELLOW / YELLOW PAVEMENT MARKER
- ☐ --CRYSTAL / CRYSTAL PAVEMENT MARKER

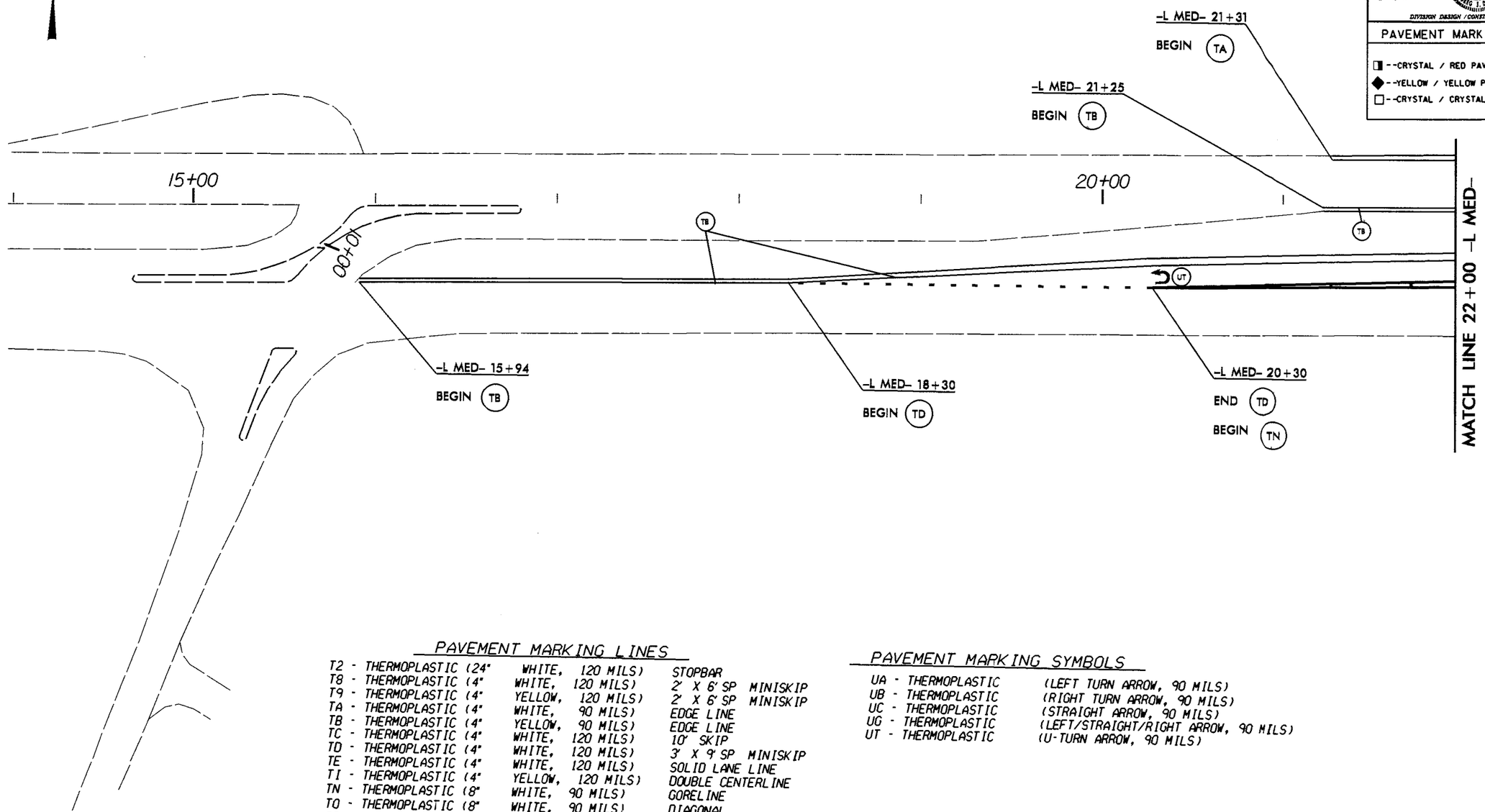

PAVEMENT MARKING LINES

T2 - THERMOPLASTIC (24"	WHITE,	120 MILS)	STOPBAR
T8 - THERMOPLASTIC (4"	WHITE,	120 MILS)	2' X 6' SP MINISKIP
T9 - THERMOPLASTIC (4"	YELLOW,	120 MILS)	2' X 6' SP MINISKIP
TA - THERMOPLASTIC (4"	WHITE,	90 MILS)	EDGE LINE
TB - THERMOPLASTIC (4"	YELLOW,	90 MILS)	EDGE LINE
TC - THERMOPLASTIC (4"	WHITE,	120 MILS)	10' SKIP
TD - THERMOPLASTIC (4"	WHITE,	120 MILS)	3' X 9' SP MINISKIP
TE - THERMOPLASTIC (4"	WHITE,	120 MILS)	SOLID LANE LINE
TI - THERMOPLASTIC (4"	YELLOW,	120 MILS)	DOUBLE CENTERLINE
TN - THERMOPLASTIC (8"	WHITE,	90 MILS)	GORELINE
TO - THERMOPLASTIC (8"	WHITE,	90 MILS)	DIAGONAL
TP - THERMOPLASTIC (8"	YELLOW,	90 MILS)	DIAGONAL

PAVEMENT MARKING SYMBOLS

UA - THERMOPLASTIC	(LEFT TURN ARROW, 90 MILS)
UB - THERMOPLASTIC	(RIGHT TURN ARROW, 90 MILS)
UC - THERMOPLASTIC	(STRAIGHT ARROW, 90 MILS)
UG - THERMOPLASTIC	(LEFT/STRAIGHT/RIGHT ARROW, 90 MILS)
UT - THERMOPLASTIC	(U-TURN ARROW, 90 MILS)

50' 0 50' 100'

REVISIONS

8/17/99

28-MAY-2014 15:30
s:\hydro_grp\projects\rdu\HOKE\rc4018sr_1305\wayside_rd\psh\pmp\W-5208J_pmp_psh_1.dgn
$$$$USER$$$$ $$$$DATE$$$$

PROJECT REFERENCE NO.	SHEET NO.
W-5208J	PMP-2
R/W SHEET NO.	

5-30-14

DIVISION DESIGN / CONSTRUCT ENGINEER

PAVEMENT MARKING LINES

T2 - THERMOPLASTIC (24"	WHITE,	120 MILS)	STOPBAR
T8 - THERMOPLASTIC (4"	WHITE,	120 MILS)	2' X 6' SP MINISKIP
T9 - THERMOPLASTIC (4"	YELLOW,	120 MILS)	2' X 6' SP MINISKIP
TA - THERMOPLASTIC (4"	WHITE,	90 MILS)	EDGE LINE
TB - THERMOPLASTIC (4"	YELLOW,	90 MILS)	EDGE LINE
TC - THERMOPLASTIC (4"	WHITE,	120 MILS)	10' SKIP
TD - THERMOPLASTIC (4"	WHITE,	120 MILS)	3' X 9' SP MINISKIP
TE - THERMOPLASTIC (4"	WHITE,	120 MILS)	SOLID LANE LINE
TI - THERMOPLASTIC (4"	YELLOW,	120 MILS)	DOUBLE CENTERLINE
TN - THERMOPLASTIC (8"	WHITE,	90 MILS)	GORELINE
TO - THERMOPLASTIC (8"	WHITE,	90 MILS)	DIAGONAL
TP - THERMOPLASTIC (8"	YELLOW,	90 MILS)	DIAGONAL

PAVEMENT MARKING SYMBOLS

UA - THERMOPLASTIC	(LEFT TURN ARROW, 90 MILS)
UB - THERMOPLASTIC	(RIGHT TURN ARROW, 90 MILS)
UC - THERMOPLASTIC	(STRAIGHT ARROW, 90 MILS)
UG - THERMOPLASTIC	(LEFT/STRAIGHT/RIGHT ARROW, 90 MILS)
UT - THERMOPLASTIC	(U-TURN ARROW, 90 MILS)

PAVEMENT MARKING LEGEND

- --CRYSTAL / RED PAVEMENT MARKER
- --YELLOW / YELLOW PAVEMENT MARKER
- --CRYSTAL / CRYSTAL PAVEMENT MARKER

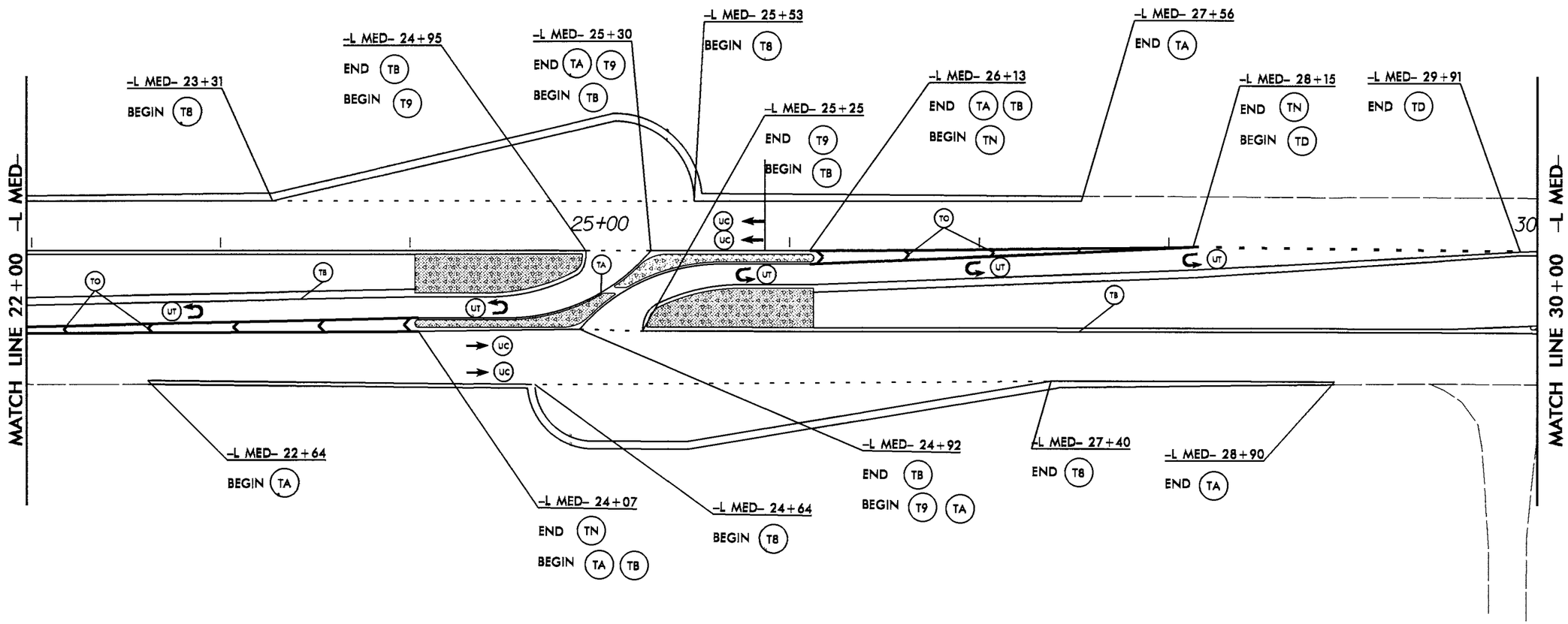

50' 0 50' 100'

REVISIONS

8/17/99

28-MAY-2014 15:30
R:\Roadway\Proj\HOKE\mc401esr_1385lwayside_rd\psh\pmp\W-5208J_pmp_psh_2.dgn
$$DGN$$ 8 DBF 01-25-2010

PROJECT REFERENCE NO.	SHEET NO.
W-5208J	PMP-3
R/W SHEET NO.	

5-30-14

DIVISION DESIGN / CONSTRUCT ENGINEER

PAVEMENT MARKING LEGEND

- ◨ --CRYSTAL / RED PAVEMENT MARKER
- ◆ --YELLOW / YELLOW PAVEMENT MARKER
- ☐ --CRYSTAL / CRYSTAL PAVEMENT MARKER

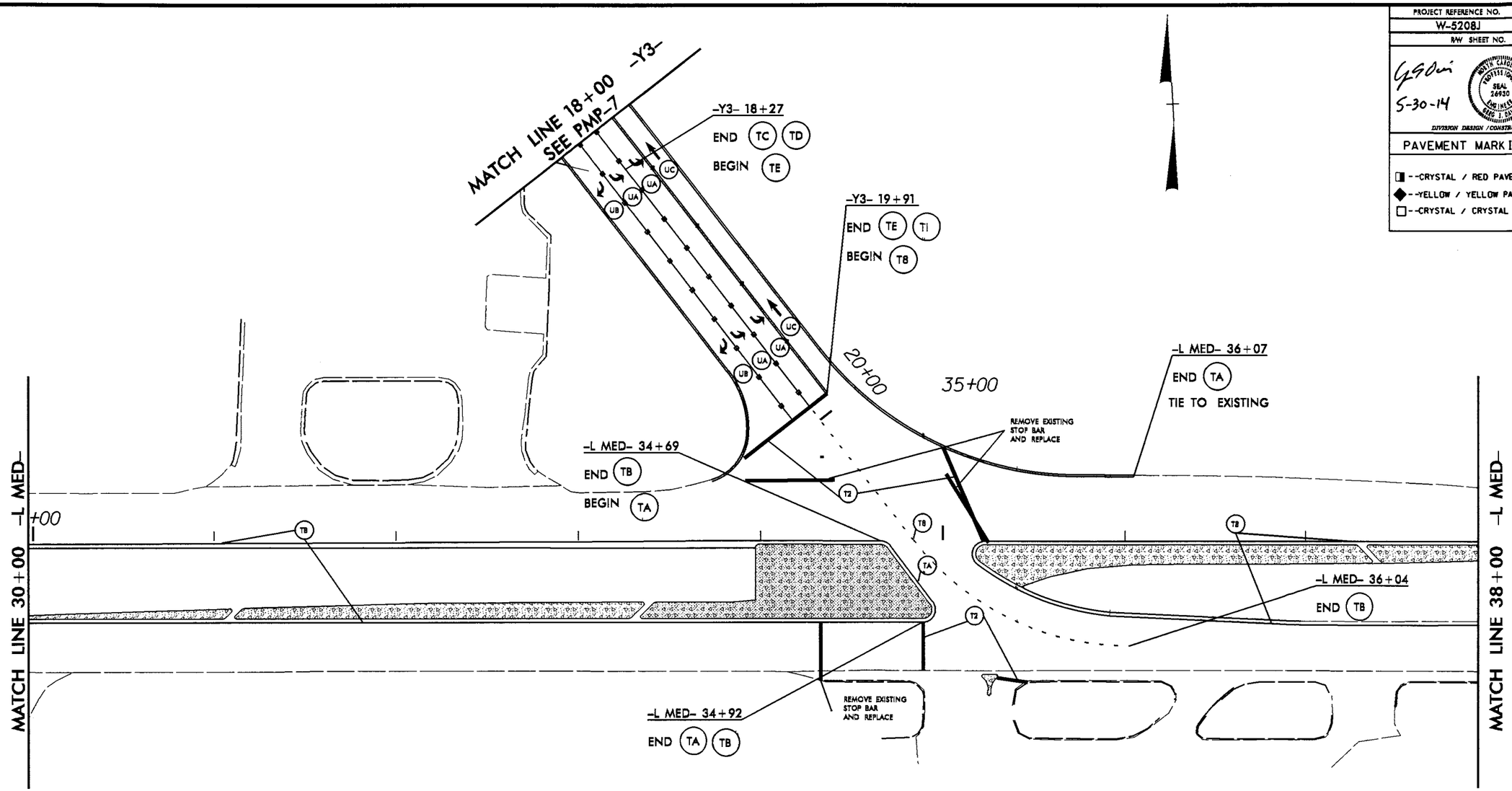

PAVEMENT MARKING LINES

T2 -	THERMOPLASTIC	(24" WHITE,	120 MILS)	STOPBAR
T8 -	THERMOPLASTIC	(4" WHITE,	120 MILS)	2' X 6' SP MINISKIP
T9 -	THERMOPLASTIC	(4" YELLOW,	120 MILS)	2' X 6' SP MINISKIP
TA -	THERMOPLASTIC	(4" WHITE,	90 MILS)	EDGE LINE
TB -	THERMOPLASTIC	(4" YELLOW,	90 MILS)	EDGE LINE
TC -	THERMOPLASTIC	(4" WHITE,	120 MILS)	10' SKIP
TD -	THERMOPLASTIC	(4" WHITE,	120 MILS)	3' X 9' SP MINISKIP
TE -	THERMOPLASTIC	(4" WHITE,	120 MILS)	SOLID LANE LINE
TI -	THERMOPLASTIC	(4" YELLOW,	120 MILS)	DOUBLE CENTERLINE
TN -	THERMOPLASTIC	(8" WHITE,	90 MILS)	GORELINE
TO -	THERMOPLASTIC	(8" WHITE,	90 MILS)	DIAGONAL
TP -	THERMOPLASTIC	(8" YELLOW,	90 MILS)	DIAGONAL

PAVEMENT MARKING SYMBOLS

UA -	THERMOPLASTIC	(LEFT TURN ARROW, 90 MILS)
UB -	THERMOPLASTIC	(RIGHT TURN ARROW, 90 MILS)
UC -	THERMOPLASTIC	(STRAIGHT ARROW, 90 MILS)
UG -	THERMOPLASTIC	(LEFT/STRAIGHT/RIGHT ARROW, 90 MILS)
UT -	THERMOPLASTIC	(U-TURN ARROW, 90 MILS)

50' 0 50' 100'

REVISIONS

8/17/99

28-MAY-2014 15:30
C:\pw_pw\pwdata\HOKE\mc4018sr_13051\wayside_rdl\psh\pmp\W-5208J_pmp_psh_3.dgn
$DGN: $DGN

PROJECT REFERENCE NO.	SHEET NO.
W-5208J	PMP-4
R/W SHEET NO.	

5-30-14

NORTH CAROLINA PROFESSIONAL SEAL 26930 ENGINEER CRAIG A. DAVIS

DIVISION DESIGN / CONSTRUCT ENGINEER

PAVEMENT MARKING LINES

T2 -	THERMOPLASTIC (24"	WHITE,	120 MILS)	STOPBAR
T8 -	THERMOPLASTIC (4"	WHITE,	120 MILS)	2' X 6' SP MINISKIP
T9 -	THERMOPLASTIC (4"	YELLOW,	120 MILS)	2' X 6' SP MINISKIP
TA -	THERMOPLASTIC (4"	WHITE,	90 MILS)	EDGE LINE
TB -	THERMOPLASTIC (4"	YELLOW,	90 MILS)	EDGE LINE
TC -	THERMOPLASTIC (4"	WHITE,	120 MILS)	10' SKIP
TD -	THERMOPLASTIC (4"	WHITE,	120 MILS)	3' X 9' SP MINISKIP
TE -	THERMOPLASTIC (4"	WHITE,	120 MILS)	SOLID LANE LINE
TI -	THERMOPLASTIC (4"	YELLOW,	120 MILS)	DOUBLE CENTERLINE
TN -	THERMOPLASTIC (8"	WHITE,	90 MILS)	GORELINE
TO -	THERMOPLASTIC (8"	WHITE,	90 MILS)	DIAGONAL
TP -	THERMOPLASTIC (8"	YELLOW,	90 MILS)	DIAGONAL

PAVEMENT MARKING SYMBOLS

UA -	THERMOPLASTIC	(LEFT TURN ARROW, 90 MILS)
UB -	THERMOPLASTIC	(RIGHT TURN ARROW, 90 MILS)
UC -	THERMOPLASTIC	(STRAIGHT ARROW, 90 MILS)
UG -	THERMOPLASTIC	(LEFT/STRAIGHT/RIGHT ARROW, 90 MILS)
UT -	THERMOPLASTIC	(U-TURN ARROW, 90 MILS)

PAVEMENT MARKING LEGEND

- ◨ --CRYSTAL / RED PAVEMENT MARKER
- ◆ --YELLOW / YELLOW PAVEMENT MARKER
- □ --CRYSTAL / CRYSTAL PAVEMENT MARKER

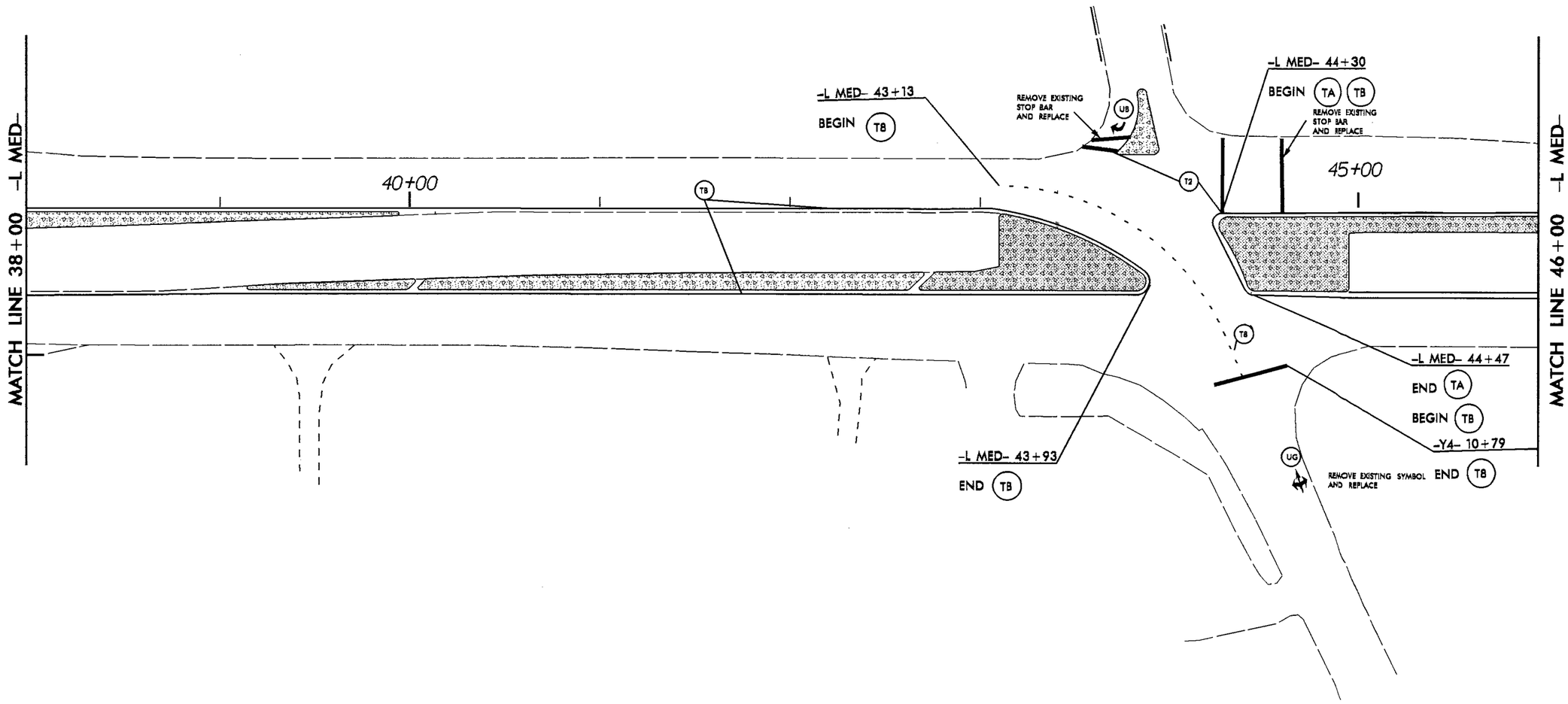

REVISIONS

8/17/99

28-MAY-2014 15:30
r:\hydro\projects\rdu\HOKE\nc401esr_1305(wayside_rd)\psh\pmp\W-5208J_pmp_psh_4.dgn

PROJECT REFERENCE NO.	SHEET NO.
W-5208J	PMP-5
R/W SHEET NO.	

5-30-14

NORTH CAROLINA PROFESSIONAL SEAL 26930 ENGINEER GREG L. DAVIS

DIVISION DESIGN / CONSTRUCT ENGINEER

PAVEMENT MARKING LINES

T2 -	THERMOPLASTIC (24"	WHITE,	120 MILS)	STOPBAR
T8 -	THERMOPLASTIC (4"	WHITE,	120 MILS)	2' X 6' SP MINISKIP
T9 -	THERMOPLASTIC (4"	YELLOW,	120 MILS)	2' X 6' SP MINISKIP
TA -	THERMOPLASTIC (4"	WHITE,	90 MILS)	EDGE LINE
TB -	THERMOPLASTIC (4"	YELLOW,	90 MILS)	EDGE LINE
TC -	THERMOPLASTIC (4"	WHITE,	120 MILS)	10' SKIP
TD -	THERMOPLASTIC (4"	WHITE,	120 MILS)	3' X 9' SP MINISKIP
TE -	THERMOPLASTIC (4"	WHITE,	120 MILS)	SOLID LANE LINE
TI -	THERMOPLASTIC (4"	YELLOW,	120 MILS)	DOUBLE CENTERLINE
TN -	THERMOPLASTIC (8"	WHITE,	90 MILS)	GORELINE
TO -	THERMOPLASTIC (8"	WHITE,	90 MILS)	DIAGONAL
TP -	THERMOPLASTIC (8"	YELLOW,	90 MILS)	DIAGONAL

PAVEMENT MARKING SYMBOLS

UA -	THERMOPLASTIC	(LEFT TURN ARROW, 90 MILS)
UB -	THERMOPLASTIC	(RIGHT TURN ARROW, 90 MILS)
UC -	THERMOPLASTIC	(STRAIGHT ARROW, 90 MILS)
UG -	THERMOPLASTIC	(LEFT/STRAIGHT/RIGHT ARROW, 90 MILS)
UT -	THERMOPLASTIC	(U-TURN ARROW, 90 MILS)

PAVEMENT MARKING LEGEND

- ◨ --CRYSTAL / RED PAVEMENT MARKER
- ◆ --YELLOW / YELLOW PAVEMENT MARKER
- ☐ --CRYSTAL / CRYSTAL PAVEMENT MARKER

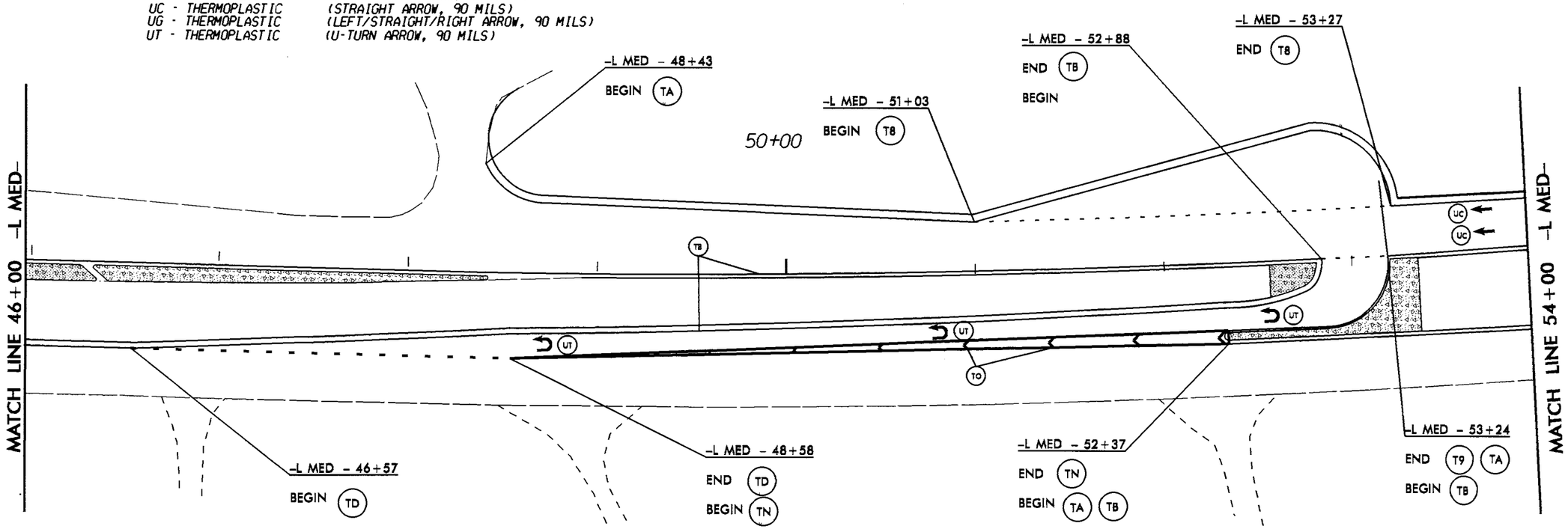

50' 0 50' 100'

REVISIONS

8/17/99

28-MAY-2014 15:30
c:\dgn8_proj\ecs3\rdu\HOKE\nc401\sr_13051\wayside_rd1\psh\pmp\W-5208J_pmp_psh_5.dgn
pscdots at hsr.ad2v20410

PROJECT REFERENCE NO.	SHEET NO.
W-5208J	PMP-6
R/W SHEET NO.	

5-30-14

DIVISION DESIGN / CONSTRUCT ENGINEER

PAVEMENT MARKING LINES

T2 -	THERMOPLASTIC (24"	WHITE,	120 MILS)	STOPBAR
T8 -	THERMOPLASTIC (4"	WHITE,	120 MILS)	2' X 6' SP MINISKIP
T9 -	THERMOPLASTIC (4"	YELLOW,	120 MILS)	2' X 6' SP MINISKIP
TA -	THERMOPLASTIC (4"	WHITE,	90 MILS)	EDGE LINE
TB -	THERMOPLASTIC (4"	YELLOW,	90 MILS)	EDGE LINE
TC -	THERMOPLASTIC (4"	WHITE,	120 MILS)	10' SKIP
TD -	THERMOPLASTIC (4"	WHITE,	120 MILS)	3' X 9' SP MINISKIP
TE -	THERMOPLASTIC (4"	WHITE,	120 MILS)	SOLID LANE LINE
TI -	THERMOPLASTIC (4"	YELLOW,	120 MILS)	DOUBLE CENTERLINE
TN -	THERMOPLASTIC (8"	WHITE,	90 MILS)	GORELINE
TO -	THERMOPLASTIC (8"	WHITE,	90 MILS)	DIAGONAL
TP -	THERMOPLASTIC (8"	YELLOW,	90 MILS)	DIAGONAL

PAVEMENT MARKING SYMBOLS

UA - THERMOPLASTIC	(LEFT TURN ARROW, 90 MILS)
UB - THERMOPLASTIC	(RIGHT TURN ARROW, 90 MILS)
UC - THERMOPLASTIC	(STRAIGHT ARROW, 90 MILS)
UG - THERMOPLASTIC	(LEFT/STRAIGHT/RIGHT ARROW, 90 MILS)
UT - THERMOPLASTIC	(U-TURN ARROW, 90 MILS)

PAVEMENT MARKING LEGEND

- --CRYSTAL / RED PAVEMENT MARKER
- --YELLOW / YELLOW PAVEMENT MARKER
- --CRYSTAL / CRYSTAL PAVEMENT MARKER

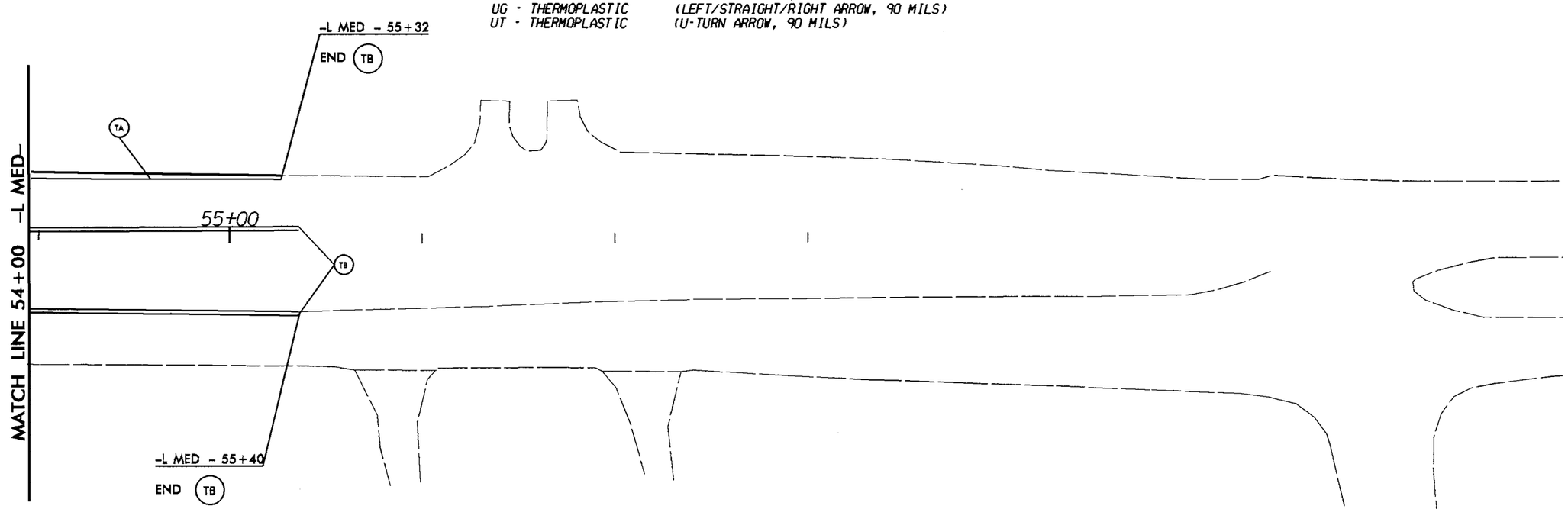

50' 0 50' 100'

REVISIONS

8/17/99

28-MAY-2014 15:39
C:\div8_projects\rdu\HOKE\nc401tsr_1305\wayside_rd\psh\pmp\W-5208J_pmp_psh_6.dgn
pmpaxis

PROJECT REFERENCE NO.	SHEET NO.
W-5208J	PMP-7
R/W SHEET NO.	

G.S. Davis
5-30-14

NORTH CAROLINA PROFESSIONAL SEAL 24930 ENGINEER GREG S. DAVIS

DIVISION DESIGN / CONSTRUCT ENGINEER

PAVEMENT MARKING LINES

T2 -	THERMOPLASTIC (24"	WHITE,	120 MILS)	STOPBAR
T8 -	THERMOPLASTIC (4"	WHITE,	120 MILS)	2' X 6' SP MINISKIP
T9 -	THERMOPLASTIC (4"	YELLOW,	120 MILS)	2' X 6' SP MINISKIP
TA -	THERMOPLASTIC (4"	WHITE,	90 MILS)	EDGE LINE
TB -	THERMOPLASTIC (4"	YELLOW,	90 MILS)	EDGE LINE
TC -	THERMOPLASTIC (4"	WHITE,	120 MILS)	10' SKIP
TD -	THERMOPLASTIC (4"	WHITE,	120 MILS)	3' X 9' SP MINISKIP
TE -	THERMOPLASTIC (4"	WHITE,	120 MILS)	SOLID LANE LINE
TI -	THERMOPLASTIC (4"	YELLOW,	120 MILS)	DOUBLE CENTERLINE
TN -	THERMOPLASTIC (8"	WHITE,	90 MILS)	GORELINE
TO -	THERMOPLASTIC (8"	WHITE,	90 MILS)	DIAGONAL
TP -	THERMOPLASTIC (8"	YELLOW,	90 MILS)	DIAGONAL

PAVEMENT MARKING SYMBOLS

UA -	THERMOPLASTIC	(LEFT TURN ARROW, 90 MILS)
UB -	THERMOPLASTIC	(RIGHT TURN ARROW, 90 MILS)
UC -	THERMOPLASTIC	(STRAIGHT ARROW, 90 MILS)
UG -	THERMOPLASTIC	(LEFT/STRAIGHT/RIGHT ARROW, 90 MILS)
UT -	THERMOPLASTIC	(U-TURN ARROW, 90 MILS)

PAVEMENT MARKING LEGEND

- --CRYSTAL / RED PAVEMENT MARKER
- --YELLOW / YELLOW PAVEMENT MARKER
- --CRYSTAL / CRYSTAL PAVEMENT MARKER

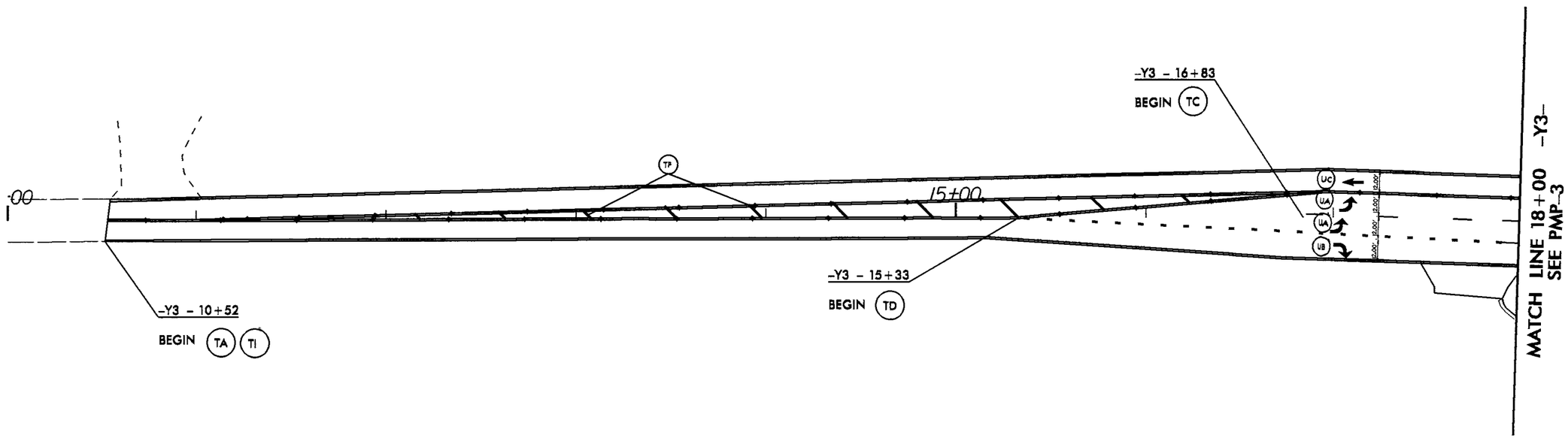

REVISIONS

8/17/99

23-MAY-2014 16:03
X:\proj\projects\rdu\HOKE\nc401esr_1305\mosjsice_rdi\psh\pmp\W-5208J_pmp_psh_7.dgn
$$USER$$ $$DATE$$ $$TIME$$

PROJECT REFERENCE NO.	SHEET NO.
W-5208J	Sig. 1

PHASING DIAGRAM

PHASING DIAGRAM DETECTION LEGEND

- DETECTED MOVEMENT
- UNDETECTED MOVEMENT (OVERLAP)
- UNSIGNALIZED MOVEMENT
- PEDESTRIAN MOVEMENT

TABLE OF OPERATION

SIGNAL FACE	PHASE Ø2+6	PHASE Ø4	FLASH
21, 22	G	R	Y
41, 42	R	G	R
61	G	R	Y
62	G	R	Y

SIGNAL FACE I.D.

All Heads L.E.D.

OASIS 2070 LOOP & DETECTOR INSTALLATION CHART

INDUCTIVE LOOPS					DETECTOR PROGRAMMING							
LOOP	SIZE (FT)	DISTANCE FROM STOPBAR (FT)	TURNS	NEW LOOP	PHASE	CALLING	EXTENSION	FULL TIME DELAY	STRETCH TIME	DELAY TIME	SYSTEM LOOP	NEW CARD
2A/S9	6X6	420	6	Y	2	Y	Y	-	-	-	Y	-
2B/S10	6X6	420	6	Y	2	Y	Y	-	-	-	Y	-
4A	6X40	0	2-4-2	Y	4	Y	Y	-	-	-	-	-
4B	6X40	0	2-4-2	Y	4	Y	Y	-	-	-	-	-
4C	6X40	0	2-4-2	Y	4	Y	Y	-	-	15	-	-
4D	6X6	0	4	Y	4	Y	Y	-	-	15	-	-
6A/S11	6X6	420	6	Y	6	Y	Y	-	-	-	Y	-
6B/S12	6X6	420	6	Y	6	Y	Y	-	-	-	Y	-

2 Phase
Fully Actuated
US 401 (Fayetteville Road) CLS

NOTES

1. Refer to "Roadway Standard Drawings NCDOT" dated January 2012 and "Standard Specifications for Roads and Structures" dated January 2012.
2. Do not program signal for late night flashing operation unless otherwise directed by the Engineer.
3. Reposition existing signal head number 42.
4. Renumber existing loops, signal heads, and phases as shown.
5. Set all detector units to presence mode.
6. Pavement markings are existing unless otherwise shown.
7. Maximum times shown in timing chart are for free-run operation only. Coordinated signal system timing values supersede these values.
8. Closed loop system data:
   Controller Asset #: 0264.

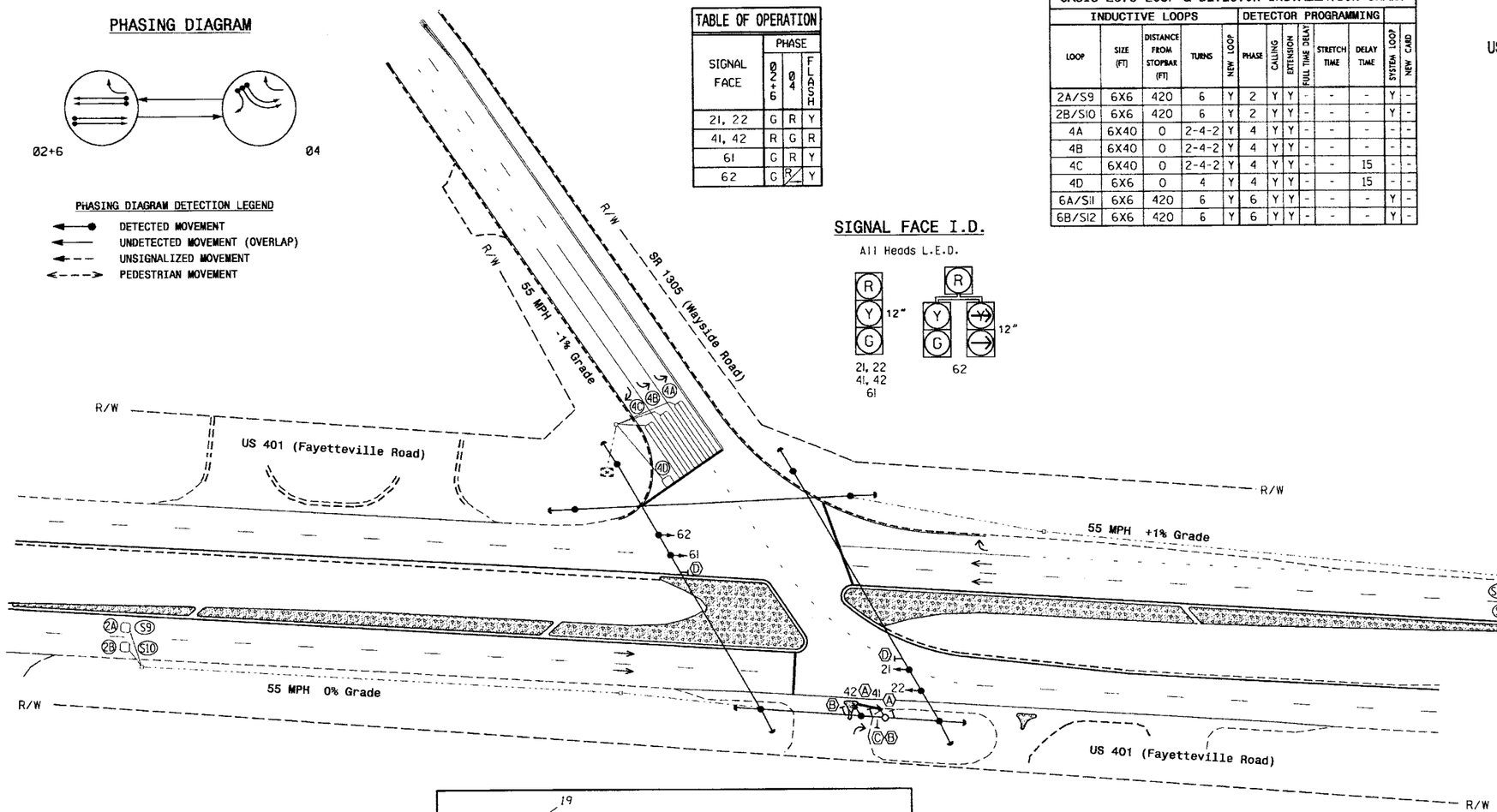

LEGEND

PROPOSED		EXISTING
	Traffic Signal Head	
	Modified Signal Head	N/A
	Sign	
	Pedestrian Signal Head With Push Button & Sign	
	Signal Pole with Guy	
	Signal Pole with Sidewalk Guy	
	Inductive Loop Detector	
	Controller & Cabinet	
	Junction Box	
	2-in Underground Conduit	
N/A	Right of Way	
	Directional Arrow	
A	Left Arrow "ONLY" Sign (R3-5L)	A
B	Right Arrow "ONLY" Sign (R3-5R)	B
C	"STOP" Sign (R1-1)	C
D	No Left Turn/U-Turn Sign (R3-18)	D

OASIS 2070L TIMING CHART

FEATURE	PHASE 2	PHASE 4	PHASE 6
Min Green 1 *	14	7	14
Extension 1 *	6.0	2.0	6.0
Max Green 1 *	45	25	45
Yellow Clearance	5.2	3.6	5.1
Red Clearance	1.0	3.7	1.0
Red Revert	2.0	2.0	2.0
Walk 1 *	-	-	-
Don't Walk 1	-	-	-
Seconds Per Actuation *	1.5	-	1.5
Max Variable Initial *	46	-	46
Time Before Reduction *	15	-	15
Time To Reduce *	30	-	30
Minimum Gap	3.4	-	3.4
Recall Mode	MIN RECALL	-	MIN RECALL
Vehicle Call Memory	YELLOW	-	YELLOW
Dual Entry	-	-	-
Simultaneous Gap	ON	ON	ON

* These values may be field adjusted. Do not adjust Min Green and Extension times for phases 2 and 6 lower than what is shown. Min Green for all other phases should not be lower than 4 seconds.

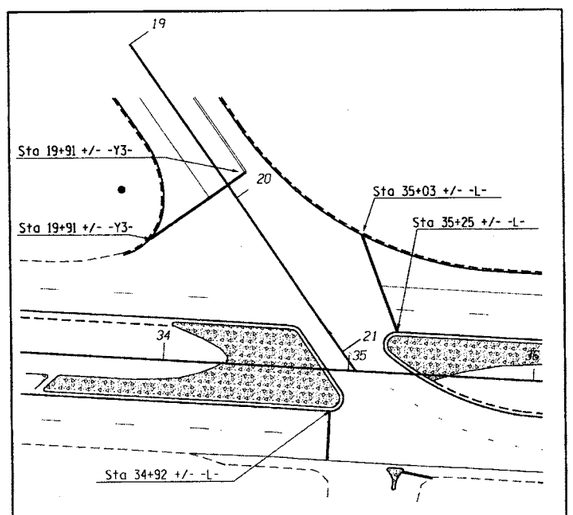

Proposed Stopbar Locations

Signal Upgrade

Prepared in the Offices of:
Transportation Mobility and Safety Division
Traffic Engineering Branch
Signal Design Section
750 N.Greenfield Pkwy,Garner,NC 27529

SCALE 0 40 1"=40'

US 401 (Fayetteville Road)
at
SR 1305 (Wayside Road)

Division 8 Hoke County E. of Raeford

PLAN DATE: December 2013 REVIEWED BY:
PREPARED BY: C.E. Carter REVIEWED BY:

REVISIONS	INIT.	DATE

SEAL
NORTH CAROLINA PROFESSIONAL SEAL 026486 ENGINEER ROBERT J. ZIEMBA
SIGNATURE DATE 2/14/14
SIG. INVENTORY NO. 08-0264

14-FEB-2014 14:27
S:\TTSA&SU\TTS Signals\Signal Design Sections\Central Region\div 8\W-5208J\W5208J_08_0264_SIGLdgn_20140214.dgn

PROJECT REFERENCE NO.	SHEET NO.
W-5208J	Sig. 2

EDI MODEL 2010ECL-NC CONFLICT MONITOR PROGRAMMING DETAIL

(remove jumpers and set switches as shown)

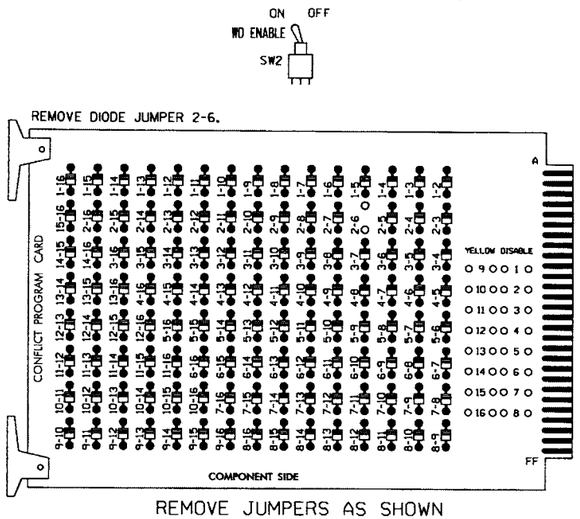

REMOVE JUMPERS AS SHOWN

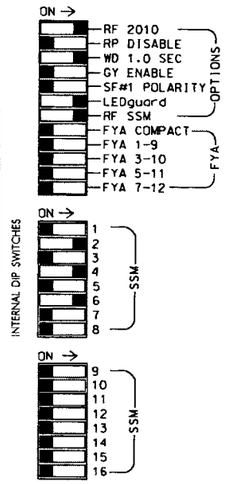

NOTES:

1. Card is provided with all diode jumpers in place. Removal of any jumper allows its channels to run concurrently.
2. Make sure jumpers SEL2-SEL5 are present on the monitor board.

NOTES

1. To prevent "flash-conflict" problems, insert red flash program blocks for all unused vehicle load switches in the output file. The installer shall verify that signal heads flash in accordance with the Signal Plans.
2. Enable Simultaneous Gap-Out for all phases.
3. Program phases 2 and 6 for Variable Initial and Gap Reduction.
4. Program phases 2 and 6 for Start Up In Green.
5. Program phases 2 and 6 for Yellow Flash.
6. The cabinet and controller are part of the US 401 (Fayetteville Road) System.

EQUIPMENT INFORMATION

CONTROLLER.....2070L
CABINET.....332
SOFTWARE.....ECONOLITE OASIS
CABINET MOUNT.....BASE
OUTPUT FILE POSITIONS...12
LOAD SWITCHES USED.....S2,S4,S6
PHASES USED.....2,4,6
OVERLAPS.....NONE

SIGNAL HEAD HOOK-UP CHART

LOAD SWITCH NO.	S1	S2	S2P	S3	S4		S4P	S5	S6	S6P	S7	S8	S8P
CMU CHANNEL NO.	1	2	13	3	4		14	5	6	15	7	8	16
PHASE	1	2	2 PED	3	4		4 PED	5	6	6 PED	7	8	8 PED
SIGNAL HEAD NO.	NU	21,22	NU	NU	41,42	62	NU	NU	61,62	NU	NU	NU	NU
RED		128			101				134				
YELLOW		129			102				135				
GREEN		130			103				136				
RED ARROW													
YELLOW ARROW						102							
GREEN ARROW						103							

NU = Not Used

INPUT FILE POSITION LAYOUT

(front view)

		1	2	3	4	5	6	7	8	9	10	11	12	13	14
FILE "I"	U	SLOT	Ø2/SYS 2A/S9	SLOT	SLOT	SLOT	Ø4 4A	Ø4 4C	SLOT	SLOT	SLOT	SLOT	SLOT	SLOT	FS DC ISOLATOR
	L	EMPTY	Ø2/SYS 2B/S10	EMPTY	EMPTY	EMPTY	Ø4 4B	Ø4 4D	EMPTY	EMPTY	EMPTY	EMPTY	EMPTY	EMPTY	ST DC ISOLATOR
FILE "J"	U	SLOT	Ø6/SYS 6A/S11	SLOT	SLOT	SLOT	SLOT	SLOT	SLOT	SLOT	SLOT	SLOT	SLOT	SLOT	SLOT
	L	EMPTY	Ø6/SYS 6B/S12	EMPTY	EMPTY	EMPTY	EMPTY	EMPTY	EMPTY	EMPTY	EMPTY	EMPTY	EMPTY	EMPTY	EMPTY

EX.: 1A, 2A, ETC. = LOOP NO.'S

FS = FLASH SENSE
ST = STOP TIME
PRE = PREEMPT

INPUT FILE CONNECTION & PROGRAMMING CHART

LOOP NO.	LOOP TERMINAL	INPUT FILE POS.	PIN NO.	INPUT ASSIGNMENT NO.	DETECTOR NO.	NEMA PHASE	CALL	EXTEND	FULL TIME DELAY	STRETCH TIME	DELAY TIME
2A/S9	TB2-5,6	I2U	39	1	2	2	Y	Y			
2B/S10	TB2-7,8	I2L	43	5	12	2	Y	Y			
4A	TB4-9,10	I6U	41	3	4	4	Y	Y			
4B	TB4-11,12	I6L	45	7	14	4	Y	Y			
4C	TB6-1,2	I7U	65	27	34	4	Y	Y			15
4D	TB6-3,4	I7L	78	40	44	4	Y	Y			15
6A/S11	TB3-5,6	J2U	40	2	6	6	Y	Y			
6B/S12	TB3-7,8	J2L	44	6	16	6	Y	Y			

INPUT FILE POSITION LEGEND: J2L
FILE J
SLOT 2
LOWER

THIS ELECTRICAL DETAIL IS FOR
THE SIGNAL DESIGN: 08-0264
DESIGNED: December 2013
SEALED: 2-14-14
REVISED: N/A

Electrical Detail

ELECTRICAL AND PROGRAMMING DETAILS FOR:

Prepared in the Offices of,
Transportation Mobility and Safety Division
STATE OF NORTH CAROLINA DEPARTMENT OF TRANSPORTATION
Signal Management Section
750 N.Greenfield Pkwy,Garner,NC 27529

US 401 (Fayetteville Road)
at
SR 1305 (Wayside Road)

Division 8 Hoke County E. of Raeford

PLAN DATE: February 2014 REVIEWED BY: JTR
PREPARED BY: James Peterson REVIEWED BY:

REVISIONS	INIT.	DATE

SEAL
NORTH CAROLINA PROFESSIONAL SEAL 008453 ENGINEER JOHN T. ROWE, JR.
SIGNATURE DATE 2-17-14
SIG. INVENTORY NO. 08-0264

17-FEB-2014 10:38
S:\MTS&SM\TS Signals\workgroups\Sig Mgmt\Petersonm\08264_sm_ele_xx.dgn
jtpeterson

PROJECT REFERENCE NO.	SHEET NO.
W-5208J	Sig. 3

PHASING DIAGRAM

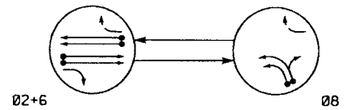

PHASING DIAGRAM DETECTION LEGEND

- DETECTED MOVEMENT
- UNDETECTED MOVEMENT (OVERLAP)
- UNSIGNALIZED MOVEMENT
- PEDESTRIAN MOVEMENT

TABLE OF OPERATION

SIGNAL FACE	PHASE Ø2+6	PHASE Ø8	FLASH
22, 23	G	R	Y
62, 63	G	R	Y
81, 82	R	G	R

SIGNAL FACE I.D.

All Heads L.E.D.

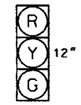

22, 23
62, 63
81, 82

OASIS 2070 LOOP & DETECTOR INSTALLATION CHART

INDUCTIVE LOOPS					DETECTOR PROGRAMMING							
LOOP	SIZE (FT)	DISTANCE FROM STOPBAR (FT)	TURNS	NEW LOOP	PHASE	CALLING	EXTENSION	FULL TIME DELAY	STRETCH TIME	DELAY TIME	SYSTEM LOOP	NEW CARD
2A/S5	6X6	420	EXISTING	-	2	Y	Y	-	-	-	Y	-
2B/S6	6X6	420	EXISTING	-	2	Y	Y	-	-	-	Y	-
6A/S7	6X6	420	6	Y	6	Y	Y	-	-	-	Y	-
6B/S8	6X6	420	6	Y	6	Y	Y	-	-	-	Y	-
8A	6X40	0	2-4-2	-	8	Y	Y	-	-	-	-	Y
8B	6X40	0	2-4-2	Y	8	Y	Y	-	-	10	-	Y
8C	6X6	0	6	Y	8	Y	Y	-	-	15	-	Y

2 Phase
Fully Actuated
US 401 (Fayetteville Road) CLS

NOTES

1. Refer to "Roadway Standard Drawings NCDOT" dated January 2012 and "Standard Specifications for Roads and Structures" dated January 2012.
2. Do not program signal for late night flashing operation unless otherwise directed by the Engineer.
3. Set all detector units to presence mode.
4. Pavement markings are existing unless otherwise shown.
5. Maximum times shown in timing chart are for free-run operation only. Coordinated signal system timing values supersede these values.
6. Closed loop system data: Controller Asset #: 0444.

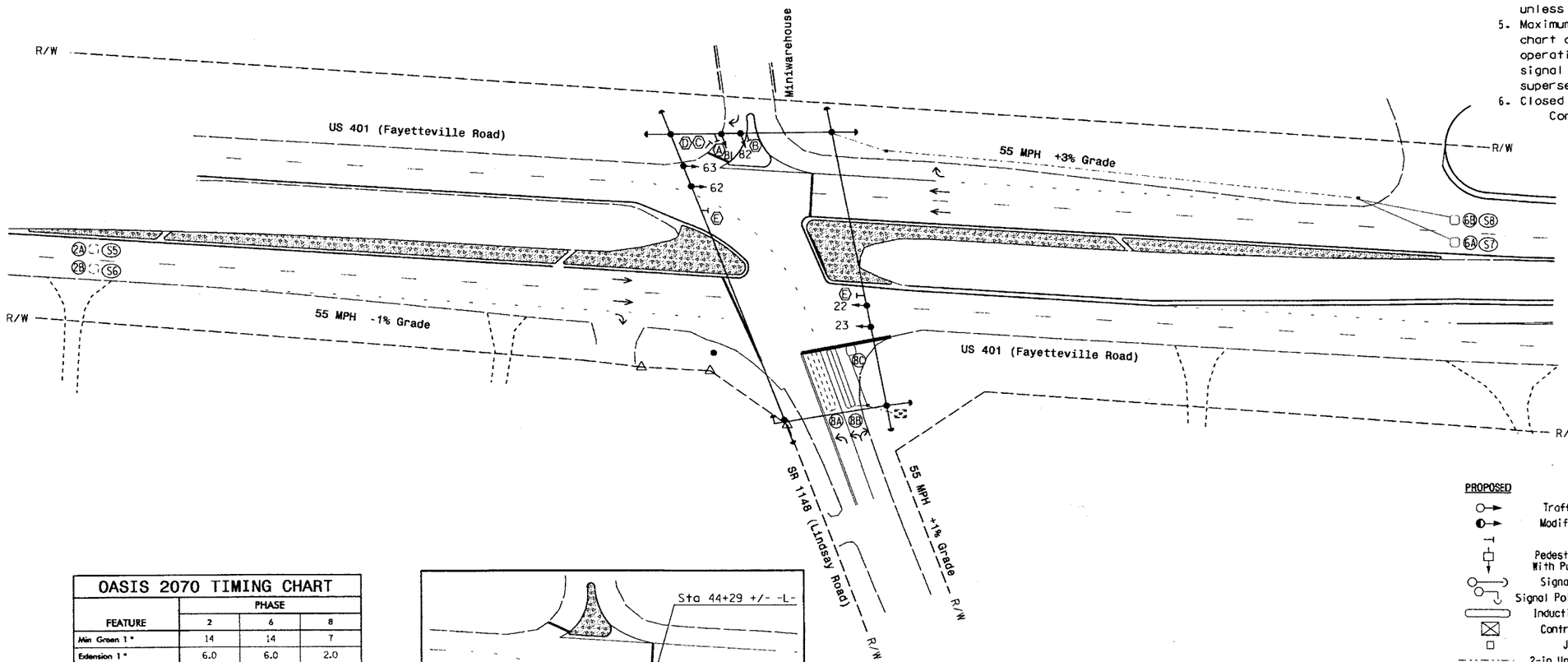

LEGEND

PROPOSED		EXISTING
	Traffic Signal Head	
	Modified Signal Head	N/A
	Sign	
	Pedestrian Signal Head With Push Button & Sign	
	Signal Pole with Guy	
	Signal Pole with Sidewalk Guy	
	Inductive Loop Detector	
	Controller & Cabinet	
	Junction Box	
	2-in Underground Conduit	
N/A	Right of Way	
	Directional Arrow	
A	Left Arrow "ONLY" Sign (R3-5L)	A
B	Dual Turn Arrows Sign	B
C	"STOP" Sign (R1-1)	C
D	Right Arrow "ONLY" Sign (R3-5R)	D
E	No U-Turn/Left Turn Sign	E

OASIS 2070 TIMING CHART

FEATURE	PHASE 2	PHASE 6	PHASE 8
Min Green 1 *	14	14	7
Extension 1 *	6.0	6.0	2.0
Max Green 1 *	90	90	15
Yellow Clearance	5.3	4.9	3.0
Red Clearance	1.0	1.0	3.9
Red Revert	2.0	2.0	2.0
Walk 1 *	-	-	-
Don't Walk 1	-	-	-
Seconds Per Actuation *	1.5	1.5	-
Max Variable Initial *	46	46	-
Time Before Reduction *	15	15	-
Time To Reduce *	30	30	-
Minimum Gap	3.4	3.4	-
Recall Mode	MIN RECALL	MIN RECALL	-
Vehicle Call Memory	YELLOW	YELLOW	-
Dual Entry	-	-	-
Simultaneous Gap	ON	ON	ON

* These values may be field adjusted. Do not adjust Min Green and Extension times for phases 2 and 6 lower than what is shown. Min Green for all other phases should not be lower than 4 seconds.

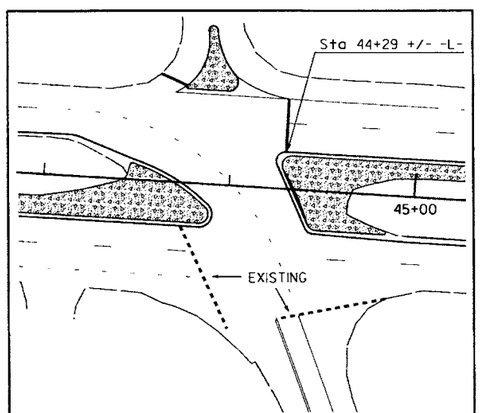

Proposed Stopbar Locations

Signal Upgrade

Prepared in the Offices of:
Transportation Mobility and Safety Division
STATE OF NORTH CAROLINA DEPARTMENT OF TRANSPORTATION
Signal Design Section
750 N.Greenfield Pkwy,Garner,NC 27529

US 401 (Fayetteville Road) at SR 1418 (Lindsay Road)

Division 8 Wake County East of Raeford

PLAN DATE: December 2013 REVIEWED BY:
PREPARED BY: C.E. Carter REVIEWED BY:

SCALE 0 40 1"=40'

REVISIONS	INIT.	DATE

SEAL
NORTH CAROLINA PROFESSIONAL SEAL 026486 ENGINEER ROBERT J. ZIEMBA
SIGNATURE DATE 2/14/14
SIG. INVENTORY NO. 08-0444

14-FEB-2014 14:29
S:\mt*5&SL*ITS Signals*Signal Design Section*Central Region*Div 8*W-5208J*W5D444_sig_dgn_20140214.cgn
zziemba0

PROJECT REFERENCE NO.	SHEET NO.
W-5208J	Sig. 4

EDI MODEL 2010ECL-NC CONFLICT MONITOR PROGRAMMING DETAIL

(remove jumpers and set switches as shown)

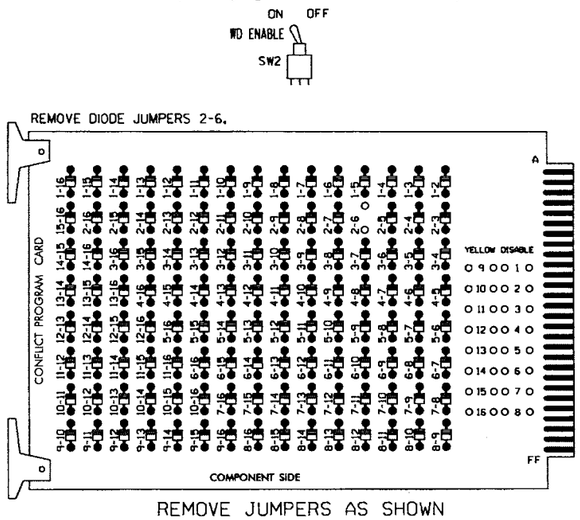

REMOVE JUMPERS AS SHOWN

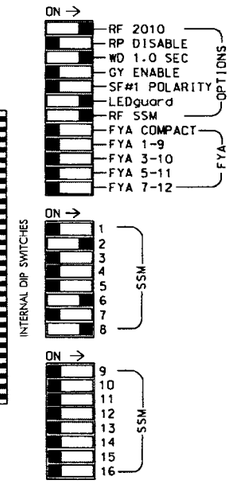

NOTES:

1. Card is provided with all diode jumpers in place. Removal of any jumper allows its channels to run concurrently.
2. Make sure jumpers SEL2-SEL5 are present on the monitor board.

■ = DENOTES POSITION OF SWITCH

NOTES

1. To prevent "flash-conflict" problems, insert red flash program blocks for all unused vehicle load switches in the output file. The installer shall verify that signal heads flash in accordance with the Signal Plans.
2. Enable Simultaneous Gap-Out for all phases.
3. Program phases 2 and 6 for Variable Initial and Gap Reduction.
4. Program phases 2 and 6 for Start Up In Green.
5. Program phases 2 and 6 for Yellow Flash.
6. The cabinet and controller are part of the US 401 (Fayetteville Road) Closed Loop System.

EQUIPMENT INFORMATION

CONTROLLER.....2070L
CABINET.....332 /W/ AUX
SOFTWARE.....ECONOLITE OASIS
CABINET MOUNT.....BASE
OUTPUT FILE POSITIONS...18 WITH AUX. OUTPUT FILE
LOAD SWITCHES USED.....S2,S6,S8
PHASES USED.....2,6,8
OVERLAPS.....NONE

SIGNAL HEAD HOOK-UP CHART

LOAD SWITCH NO.	S1	S2	S2P	S3	S4	S4P	S5	S6	S6P	S7	S8	S8P	S9	S10	S11	S12	S13	S14
CMU CHANNEL NO.	1	2	13	3	4	14	5	6	15	7	8	16	9	10	17	11	12	18
PHASE	1	2	2 PED	3	4	4 PED	5	6	6 PED	7	8	8 PED	OLA	OLB	SPARE	OLC	OLD	SPARE
SIGNAL HEAD NO.	NU	22,23	NU	NU	NU	NU	NU	62,63	NU	NU	81,82	NU	NU	NU	NU	NU	NU	NU
RED		128						134			107							
YELLOW		129						135			108							
GREEN		130						136			109							
RED ARROW																		
YELLOW ARROW																		
GREEN ARROW																		

NU = Not Used

INPUT FILE POSITION LAYOUT

(front view)

		1	2	3	4	5	6	7	8	9	10	11	12	13	14
FILE "I"	U	SLOT	Ø2/SYS 2A/S5	SLOT	SLOT	SLOT	SLOT	SLOT	SLOT	SLOT	SLOT	SLOT	SLOT	SLOT	FS DC ISOLATOR
	L	EMPTY	Ø2/SYS 2B/S6	EMPTY	EMPTY	EMPTY	EMPTY	EMPTY	EMPTY	EMPTY	EMPTY	EMPTY	EMPTY	EMPTY	ST DC ISOLATOR
FILE "J"	U	SLOT	Ø6/SYS 6A/S7	SLOT	SLOT	SLOT	Ø 8 8A	Ø 8 8C	SLOT	SLOT	SLOT	SLOT	SLOT	SLOT	SLOT
	L	EMPTY	Ø6/SYS 6B/S8	EMPTY	EMPTY	EMPTY	Ø 8 8B	NOT USED	EMPTY	EMPTY	EMPTY	EMPTY	EMPTY	EMPTY	EMPTY

EX.: 1A, 2A, ETC. = LOOP NO.'S

FS = FLASH SENSE
ST = STOP TIME

INPUT FILE CONNECTION & PROGRAMMING CHART

LOOP NO.	LOOP TERMINAL	INPUT FILE POS.	PIN NO.	INPUT ASSIGNMENT NO.	DETECTOR NO.	NEMA PHASE	CALL	EXTEND	FULL TIME DELAY	STRETCH TIME	DELAY TIME
2A/S5	TB2-5,6	I2U	39	1	2	2	Y	Y			
2B/S6	TB2-7,8	I2L	43	5	12	2	Y	Y			
6A/S7	TB3-5,6	J2U	40	2	6	6	Y	Y			
6B/S8	TB3-7,8	J2L	44	6	16	6	Y	Y			
8A	TB5-9,10	J6U	42	4	8	8	Y	Y			
8B	TB5-11,12	J6L	46	8	18	8	Y	Y			10
8C	TB7-1,2	J7U	66	28	38	8	Y	Y			15

INPUT FILE POSITION LEGEND: J2L
FILE J
SLOT 2
LOWER

THIS ELECTRICAL DETAIL IS FOR
THE SIGNAL DESIGN: 08-0444
DESIGNED: December 2013
SEALED: 2-14-14
REVISED: N/A

Electrical Detail

ELECTRICAL AND PROGRAMMING DETAILS FOR:

Prepared In the Offices of:
Transportation Mobility and Safety Division
NORTH CAROLINA DEPARTMENT OF TRANSPORTATION
Signals Management Section
750 N.Greenfield Pkwy, Garner, NC 27529

US 401 (Fayetteville Road)
at
SR 1418 (Lindsay Road)

Division 8 Hoke County East of Raeford

PLAN DATE: February 2014 REVIEWED BY: JTR
PREPARED BY: James Peterson REVIEWED BY:

REVISIONS	INIT.	DATE

SEAL
NORTH CAROLINA PROFESSIONAL SEAL 008453 ENGINEER JOHN T. ROWE, JR.

John T. Rowe 2-17-14
SIGNATURE DATE
SIG. INVENTORY NO. 08-0444

17-FEB-2014 13:27
S:\MTSSDWITS Signals\Workgroups\Sig Work\Petersonm\08044_sheet_e.xxx.dgn
jobid=sgn

See Sheet 1-A For Index of Sheets

STATE OF NORTH CAROLINA
DIVISION OF HIGHWAYS

STATE	STATE PROJECT REFERENCE NO.	SHEET NO.
N.C.	W-5208J	ECP-1

STATE PROJ. NO.	F.A. PROJ. NO.	DESCRIPTION
45338.1.10	HSIP-0401(254)	PE
45338.2.10	HSIP-0401(254)	R/W
45338.3.10	HSIP-0401(254)	CONST.

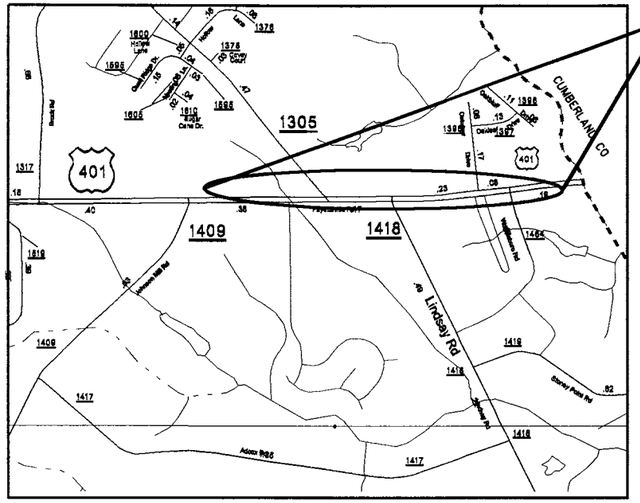

PLAN FOR PROPOSED
HIGHWAY EROSION CONTROL
HOKE COUNTY

LOCATION: US 401 AT SR 1305 (WAYSIDE RD.) AND SR 1409 (LINDSAY RD)

TYPE OF WORK: GRADING, PAVING, CONCRETE ISLANDS, AND THEMOPLASTIC MARKINGS & MARKERS

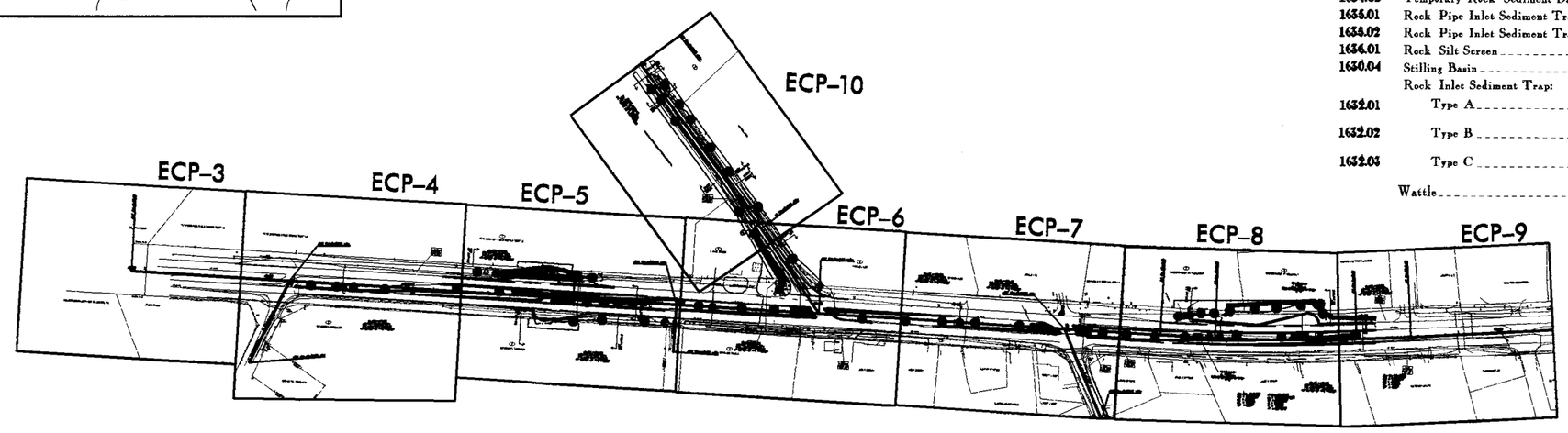

EROSION AND SEDIMENT CONTROL MEASURES

Std. #	Description	Symbol
	Streambank Reforestation	
1630.03	Temporary Silt Ditch	TSD
1630.05	Temporary Diversion	TD
1605.01	Temporary Silt Fence	
1606.01	Special Sediment Control Fence	
1622.01	Temporary Berms and Slope Drains	
1630.01	Riser Basin	
1630.02	Silt Basin Type B	
1633.01	Temporary Rock Silt Check Type-A	
1633.02	Temporary Rock Silt Check Type-B	
1634.01	Temporary Rock Sediment Dam Type-A	
1634.02	Temporary Rock Sediment Dam Type-B	
1635.01	Rock Pipe Inlet Sediment Trap Type-A	
1635.02	Rock Pipe Inlet Sediment Trap Type-B	
1636.01	Rock Silt Screen	
1630.04	Stilling Basin	
	Rock Inlet Sediment Trap:	
1632.01	Type A	A -OR- A
1632.02	Type B	B -OR- B
1632.03	Type C	C -OR- C
	Wattle	

CONTRACT:

TIP PROJECT: W-5208J

Prepared By:
Greg S.Davis,PE
Level III A #3088
December 31,2014

PROJECT CONTACTS:
District Engineer Marty Tillman,PE
Design & Construct Engineer Greg S.Davis,PE
Resident Engineer Charles E.Dumas Jr,PE

PROJECT LENGTH
0.93 mi.

Prepared in the Office of:
DIVISION EIGHT
DIVISION DESIGN & CONSTRUCT UNIT
902 N Sandhills Blvd.
PO Box 1067
Aberdeen, 28315

2012 STANDARD SPECIFICATIONS

Roadway Standard Drawings

The following roadway english standards as appear in "Roadway Standard Drawings"- Roadway Design Unit - N. C. Department of Transportation - Raleigh, N. C., dated January 17, 2012 and the latest revision thereto are applicable to this project and by reference hereby are considered a part of these plans.

1605.01	Temporary Silt Fence	1632.01	Rock Inlet Sediment Trap Type A
1606.01	Special Sediment Control Fence	1632.03	Rock Inlet Sediment Trap Type C
1622.01	Temporary Berms and Slope Drains	1633.01	Temporary Rock Silt Check Type A
1630.01	Riser Basin	1633.02	Temporary Rock Silt Check Type B
1630.02	Silt Basin Type B	1634.01	Temporary Rock Sediment Dam Type A
1630.03	Temporary Silt Ditch	1634.02	Temporary Rock Sediment Dam Type B
1630.04	Stilling Basin	1635.01	Rock Pipe Inlet Sediment Trap Type A
1630.05	Temporary Diversion	1636.01	Rock Silt Screen

29-MAY-2014 11:48
C:\div8_projects\rdy\HOKE\nc401@sr_1305\wayside_rd\psh\ecp\us401@SR-1305(wayside_rd)_ecp_tsh.dgn
gsdavis AT D8CAD-270410

COIR FIBER BAFFLE DETAIL

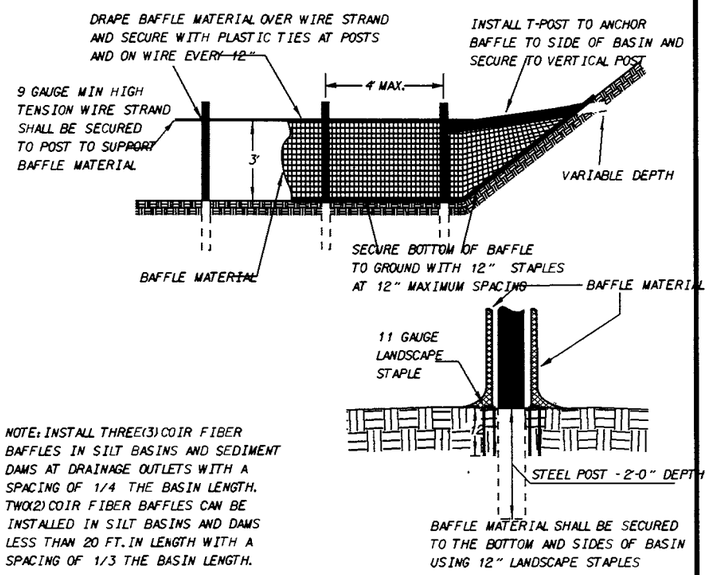

NOTE: INSTALL THREE(3) COIR FIBER BAFFLES IN SILT BASINS AND SEDIMENT DAMS AT DRAINAGE OUTLETS WITH A SPACING OF 1/4 THE BASIN LENGTH. TWO(2) COIR FIBER BAFFLES CAN BE INSTALLED IN SILT BASINS AND DAMS LESS THAN 20 FT. IN LENGTH WITH A SPACING OF 1/3 THE BASIN LENGTH.

EROSION CONTROL DETAILS AND SPECIFICATIONS

STD. #	DESCRIPTION	SYMBOL
1630.03	TEMPORARY SILT DITCH	TSD
1630.05	TEMPORARY DIVERSION	TD
1605.01	TEMPORARY SILT FENCE	
1622.01	GUIDE FOR TEMPORARY BERMS & SLOPE DRAINS	
1630.01	Riser Basin	
1630.02	SILT BASIN TYPE-B	
1633.01	TEMPORARY ROCK SILT CHECK TYPE-A	
	Wattle	
1633.02	TEMPORARY ROCK SILT CHECK TYPE-B	
1634.01	TEMPORARY ROCK SEDIMENT DAM TYPE-A	
1634.02	TEMPORARY ROCK SEDIMENT DAM TYPE-B	
1635.01	ROCK PIPE INLET SEDIMENT TRAP TYPE A	
1636.01	ROCK SILT SCREEN	
1630.04	STILLING BASIN FOR PUMPED EFFLUENT	
	ROCK INLET SEDIMENT PROTECTION	
1632.01	TRAP TYPE-A	A OR A
1632.02	TRAP TYPE-B	B OR B
1632.03	TRAP TYPE-C	C OR C

NARRATIVE

1. SOIL TYPE: CLAY SAND X

2. IS THE PROJECT LOCATED IN A HIGH QUALITY WATER ZONE? YES X NO

3. ARE THERE ANY WETLANDS ADJOINING THIS PROJECT? YES X NO

SITE DESCRIPTION

This project is located on US 401 on the Eastern side of Raeford. The area surrounding this project primarily consists of wooded areas, commercial development, and agricultural fields. The drainage consists of roadway ditches that lead to existing ditches.

PROJECT DESCRIPTION

The project will consist of clearing, grubbing, draining, setting up the base and paving. The major land disturbing activites will consist of clearing and grading within the right of way. Temporary and permanent erosion control measures will be installed.

MAINTENANCE SCHEDULE

1. INSPECT WEEKLY AND AFTER EACH RAINFALL USE THE DEPARTMENT OF TRANSPORTATION'S EROSION CONTROL INSPECTION REPORT.

2. MAINTAIN EROSION CONTROL DEVICES AS FOLLOWS:

A. SILT DITCH - REMOVE SEDIMENT FROM THE FLOW AREA AND REPAIR THE DIVERSION RIDGE - CAREFULLY CHECK OUTLETS AND MAKE TIMELY REPAIRS AS NEEDED.

B. SILT FENCE - REMOVE SEDIMENT DEPOSITS AS NECESSARY TO PROVIDE ADEQUATE STORAGE VOLUME FOR THE NEXT RAIN AND TO REDUCE PRESSURE ON THE FENCE - AVOID UNDERMINING THE FENCE.

C. SLOPE DRAINS - INSPECT THE SLOPE DRAINS AND SUPPORTING DIVERSIONS.

D. SEDIMENT BASIN - REMOVE SEDIMENT AND RESTORE THE BASIN TO ITS ORIGINAL DIMENSIONS WHEN SEDIMENT ACCUMULATES TO ONE-HALF THE DESIGN DEPTH - CHECK THE EMBANKMENT, SPILLWAYS, AND OUTLET FOR EROSION DAMAGE, AND INSPECT THE EMBANKMENT FOR PIPING AND SETTLEMENT - REMOVE ALL TRASH AND OTHER DEBRIS FROM THE RISER AND POOL AREA.

E. CHECK DAM - REMOVE SETTLEMENT ACCUMULATED BEHIND THE DAMS AS NEEDED TO PREVENT DAMAGE TO CHANNEL VEGETATION - ADD STONE TO DAMS AS NEEDED TO MAINTAIN DESIGN HEIGHT AND CROSS SECTION.

F. ROCK DAM - REMOVE SEDIMENT AND RESTORE ORIGINAL VOLUME WHEN SEDIMENT ACCUMULATES TO ONE-HALF THE DESIGN VOLUME - CHECK THE STRUCTURE FOR EROSION, PIPING, AND ROCK DISPLACEMENT AFTER EACH SIGNIFICANT RAINSTORM AND REPAIR IMMEDIATELY.

G. DROP INLET PROTECTION (TYPE C) - REMOVE SEDIMENT FROM THE POOL AREAS AS NECESSARY TO PROVIDE ADEQUATE STORAGE VOLUME FOR THE NEXT RAIN.

H. SEDIMENT TRAP - REMOVE SEDIMENT AND RESTORE THE TRAP TO ITS ORIGINAL DIMENSIONS WHEN SETTLEMENT HAS ACCUMULATED TO ONE-HALF THE DESIGN DEPTH OF THE TRAP - CHECK THE STRUCTURE FOR DAMAGE FROM EROSION OR PIPING TO ENSURE IT IS A MINIMUM OF 1.5 FT. BELOW THE LOW POINT OF THE EMBANKMENT.

NOTE: SEDIMENT SHOULD BE PLACED IN DESIGNATED DISPOSAL AREAS AND NOT ALLOWED TO FLOW INTO STREAMS OR DRAINAGE WAYS DURING STRUCTURE REMOVAL.

NOTE: ALL SEDIMENT TRAPS/BASINS SHALL HAVE COIR FIBER BAFFLES. BASINS/TRAPS OVER 10 FT IN LENGTH SHALL HAVE TWO ROWS.

NOTE: NO PAM TO USED WITH THE LAST BMT (WATTLE) AT OUTLET OF THE PROJECT

NOTE: The erosion control measures have be designed to provide a minimum of 43% of the storage calculated using the RUSLE2 analysis. These sections of disturbed area must then be permanently stabilized within 60 days from the time grading begins. The devices designed using these calculations have been noted.

GENERAL CONSIDERATIONS

1. THE LAW REQUIRES INSTALLATION AND MAINTENANCE OF SUFFICIENT EROSION CONTROL PRACTICES TO RETAIN SEDIMENT WITHIN THE BOUNDARIES OF THE SITE. IT ALSO REQUIRES THAT SURFACES BE NON EROSIVE AND STABLE WITHIN 14 DAYS CALENDAR DAYS AFTER THE COMPLETION OF ANY PHASE OF GRADING.

2. FIT THE DEVELOPMENT TO THE SITE - FOLLOW THE NATURAL CONTOURS AS MUCH AS POSSIBLE. PRESERVE AND USE NATURAL DRAINAGE SYSTEMS.

3. LIMIT CLEARING AND GRUBBING - CLEARLY DEFINE WORK LIMIT LINES. GRADE TO MINIMIZE CUT-AND-FILL SLOPES, PRESERVE NATURAL BUFFER AREAS, AND LIMIT THE TIME THAT BARE SOIL IS EXPOSED.

4. PROTECT THE SOIL SURFACE - LIMIT THE EXTENT OF DISTURBANCE AND STABILIZE THE SOIL SURFACE IMMEDIATELLY. ONCE THE SURFACE HAS BEEN DISTURBED, IT IS SUBJECT TO ACCELERATED EROSION AND SHOULD BE PROTECTED WITH APPROPRIATE COVER, SUCH AS MULCH OR VEGETATION IN AN EXPEDIENT MANNER.

5. SEDIMENT BASINS AND TRAPS - SELECT SITES AND INSTALL SEDIMENT BASINS AND TRAPS BEFORE OTHER CONSTRUCTION ACTIVITIES ARE STARTED. ALSO CONSIDER LOCATIONS FOR DIVERSIONS, OPEN CHANNELS, AND STORM DRAINS AT THIS TIME SO THAT ALL SEDIMENT-LADEN TO RUN OFF CAN BE DIRECTED TO AN IMPOUNDMENT STRUCTURE BEFORE LEAVING THE CONSTRUCTION SITE. INSTALL ALL MEASURES AND RELEASE POINTS PRIOR TO CLEARING AND GRUBBING.

6. ONCE AN AREA IS DISTURBED, IT IS SUBJECT TO ACCELERATED EROSION. EROSION CONSTROL CAN BE ACHIEVED BY:

   * LIMITING THE SIZE OF THE CLEARING AND TIME OF EXPOSURE BY PROPER SCHEDULING.
   * REDUCING THE AMOUNT OF RUNOFF OVER THE DISTURBED SURFACE.
   * LIMITING GRADES AND LENGTHS OF SLOPES, AND
   * RE-ESTABLISHING PROTECTIVE COVER IMMEDIATELY AFTER LAND DUSTURBING ACTIVITIES ARE COMPLETED OR WHEN CONSTRUCTION ACTIVITES ARE DELAYED FOR THIRTY (30) OR MORE WORKING DAYS

7. STABILIZE CONSTRUCTION ACCESS AREAS, CONSTRUCTION ROADS, AND PARKING AREA DURING INITIAL ACTIVITIES. TRY TO KEEP ROAD GRADES TO A MINIMUM GENERALLY NEVER EXCEEDING 12%.

8. CLEAR BORROW AND WASTE DISPOSAL AREAS AS NEEDED AND PROTECT THEM FROM SURFACE RUNOFF. SLOPE ALL AREAS TO PROVIDE POSITIVE DRAINAGE, AND STABILIZE BARE SOIL SURFACES WITH PERMANENT VEGETATION OR MULCH AS SOON AS FINAL GRADES ARE PREPARED. DIRECT ALL RUNOFF THAT CONTAINS SEDIMENT TO A SEDIMENT-TRAPPING DEVICE. IN LARGE BORROW AND DISPOSAL SITES, SHAPE AND DEEPEN THE LOWER END TO FORM AN IN-PLACE SEDIMENT TRAP.

9. ONLY SEDIMENT-FREE RUNOFF MAY BE DISCHARGED FROM CONSTRUCTION SITES DIRECTLY INTO STREAMS. ENSURE THAT ALL OTHER FLOWS ENTER FROM DESILTING POOLS FORMED BY SEDIMENT TRAPS OR BARRIERS.

10. AREAS ADJOINING STREAMS SHOULD BE LEFT UNDISTURBED AS BUFFERS. WHERE NATURAL BUFFERS ARE NOT AVAILABLE, PROVIDE ARTIFICIAL BUFFERS. WHERE WORK IS REQUIRED ALONG A STREAM, PROVIDE MECHANICAL OR ARTIFICIAL BUFFER (25 FEET MINIMUM REQUIRED).

11. BEFORE MOVING TO NEXT JOB SITE, REVIEW ALL MEASURES FOR EFFECTIVENESS; MAKE ANY ADJUSTMENTS, CLEAR-OUTS, OR REPAIR; CALL ROADSIDE ENVIRONMENTAL DEPARTMENT FOR INSTALLATION OF A DITCH LINER AND SEEDING AND MULCHING OF ALL DISTURBED AREAS.

12. CONTINUE TO CHECK AND MAINTAIN ALL MEASURES AFTER EACH SIGNIFICANT RAINFALL UNTIL ALL DISTURBED AREAS BECOME STABILIZED.

13. FILL IN ALL SILT BASINS AND SILT DITCHES. REMOVE ALL SILT FENCES AND SLOPE DRAINS. REDISTRIBUTE ALL STONE FROM SILT CHECKS, SEDIMENT DAMS, AND SILT SCREENS. SEED AND MULCH DISTURBED AREAS.

TIP PROJECT	SHEET NO
W-5208J	ECP-2A

WATTLE WITH POLYACRYLAMIDE (PAM) DETAIL

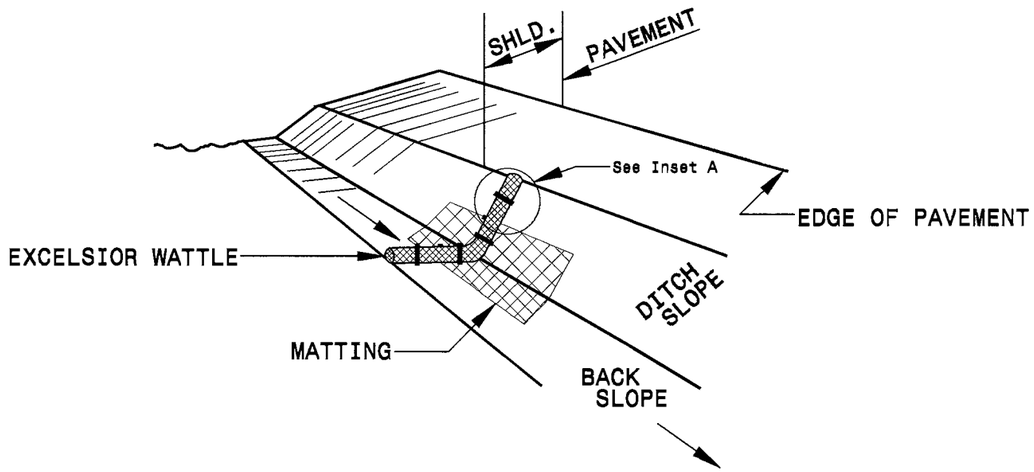

ISOMETRIC VIEW

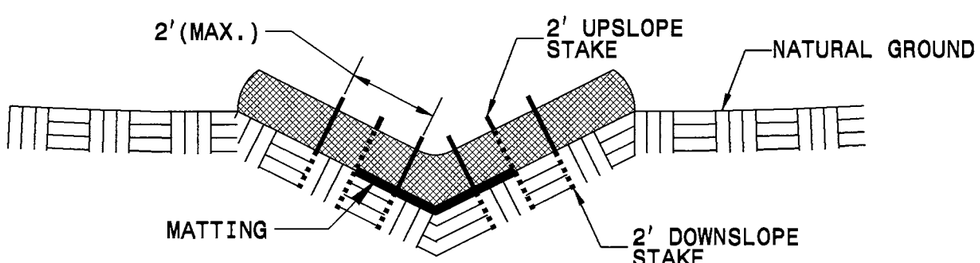

CROSS SECTION VEE DITCH

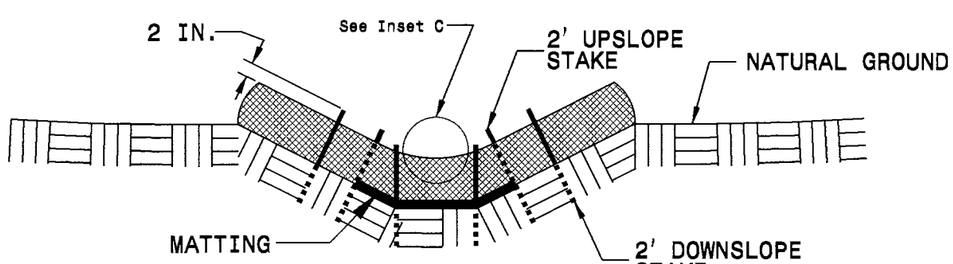

CROSS SECTION TRAPEZOIDAL DITCH

NOTES:

USE MINIMUM 12 IN. DIAMETER EXCELSIOR WATTLE.

USE 2 FT. WOODEN STAKES WITH A 2 IN. BY 2 IN. NOMINAL CROSS SECTION.

ONLY INSTALL WATTLE(S) TO A HEIGHT IN DITCH SO FLOW WILL NOT WASH AROUND WATTLE AND SCOUR DITCH SLOPES AND AS DIRECTED.

INSTALL A MINIMUM OF 2 UPSLOPE STAKES AND 4 DOWNSLOPE STAKES AT AN ANGLE TO WEDGE WATTLE TO BOTTOM OF DITCH.

PROVIDE STAPLES MADE OF 0.125 IN. DIAMETER STEEL WIRE FORMED INTO A U SHAPE NOT LESS THAN 12" IN LENGTH.

INSTALL STAPLES APPROXIMATELY EVERY 1 LINEAR FOOT ON BOTH SIDES OF WATTLE AND AT EACH END TO SECURE IT TO THE SOIL.

INSTALL MATTING IN ACCORDANCE WITH SECTION 1631 OF THE STANDARD SPECIFICATIONS.

PRIOR TO POLYACRYLAMIDE (PAM) APPLICATION, OBTAIN A SOIL SAMPLE FROM PROJECT LOCATION, AND FROM OFFSITE MATERIAL, AND ANALYZE FOR APPROPRIATE PAM FLOCCULANT TO BE APPLIED TO EACH WATTLE.

INITIALLY APPLY 2 OUNCES OF ANIONIC OR NEUTRALLY CHARGED PAM OVER WATTLE WHERE WATER WILL FLOW AND 1 OUNCE OF PAM ON MATTING ON EACH SIDE OF WATTLE. REAPPLY PAM AFTER EVERY RAINFALL EVENT THAT IS EQUAL TO OR EXCEEDS 0.50 IN.

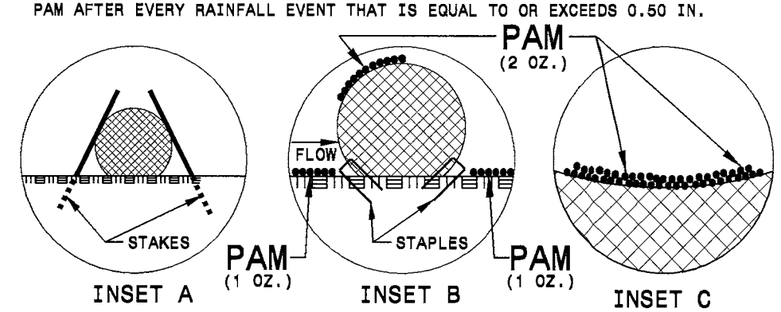

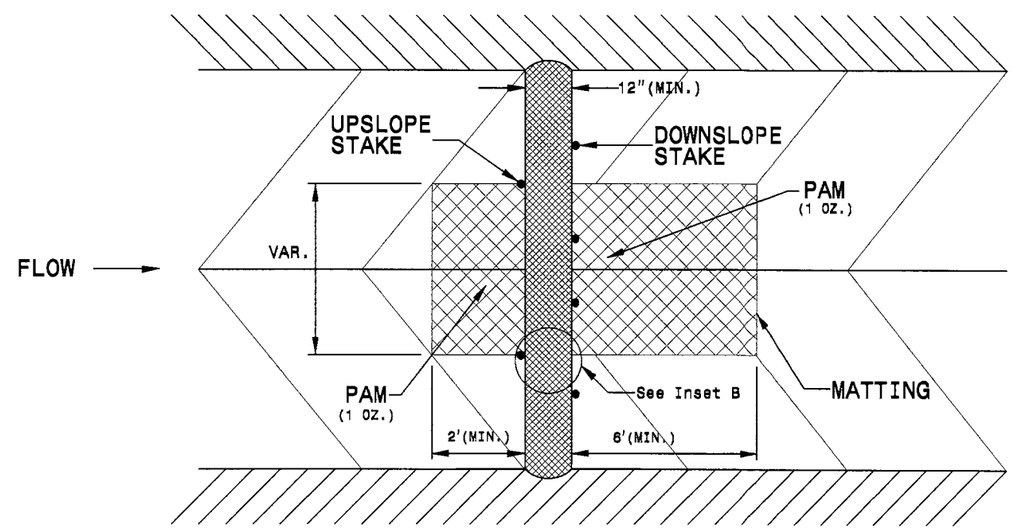

TOP VIEW

DIVISION OF HIGHWAYS
STATE OF NORTH CAROLINA

SOIL STABILIZATION TIMEFRAMES

SITE DESCRIPTION	STABILIZATION TIME	TIMEFRAME EXCEPTIONS
PERIMETER DIKES, SWALES, DITCHES AND SLOPES	7 DAYS	NONE
HIGH QUALITY WATER (HQW) ZONES	7 DAYS	NONE
SLOPES STEEPER THAN 3:1	7 DAYS	IF SLOPES ARE 10' OR LESS IN LENGTH AND ARE NOT STEEPER THAN 2:1, 14 DAYS ARE ALLOWED.
SLOPES 3:1 OR FLATTER	14 DAYS	7 DAYS FOR SLOPES GREATER THAN 50' IN LENGTH.
ALL OTHER AREAS WITH SLOPES FLATTER THAN 4:1	14 DAYS	NONE, EXCEPT FOR PERIMETERS AND HQW ZONES.

PROJECT REFERENCE NO.	SHEET NO.
W-5208J	ECP-2C

DIVISION OF HIGHWAYS
STATE OF NORTH CAROLINA

SOIL STABILIZATION SUMMARY SHEET

MATTING FOR EROSION CONTROL

CONST SHEET NO.	LINE	FROM STATION	TO STATION	SIDE	ESTIMATE (SY)
5	-L MED-	24+00	28+80	CL	590
5	-L MED-	22+60	28+80	RT	500
5	-L MED-	21+30	27+56	LT	570
7&8	-L MED-	45+00	49+60	CL	620
8&9	-L MED-	49+60	52+40	CL	375
8&9	-L MED-	53+40	55+40	CL	270
8	-L MED-	48+60	49+60	LT	95
8	-L MED-	49+80	53+00	LT	295
9	-L MED-	53+40	53+00	LT	40
11	-Y3-	10+60	11+40	RT	75
11	-Y3-	18+00	19+60	RT	150
11	-Y3-	10+60	11+50	LT	85
11	-Y3-	11+60	12+20	LT	55
11	-Y3-	12+40	15+40	LT	275
11	-Y3-	18+60	20+20	LT	150
				SUBTOTAL	4145
MISCELLANEOUS MATTING TO BE INSTALLED AS DIRECTED BY THE ENGINEER					
				TOTAL	4145
				SAY	4150

PROJECT REFERENCE NO.	SHEET NO.
W-5208J	ECP-3
R/W SHEET NO.	

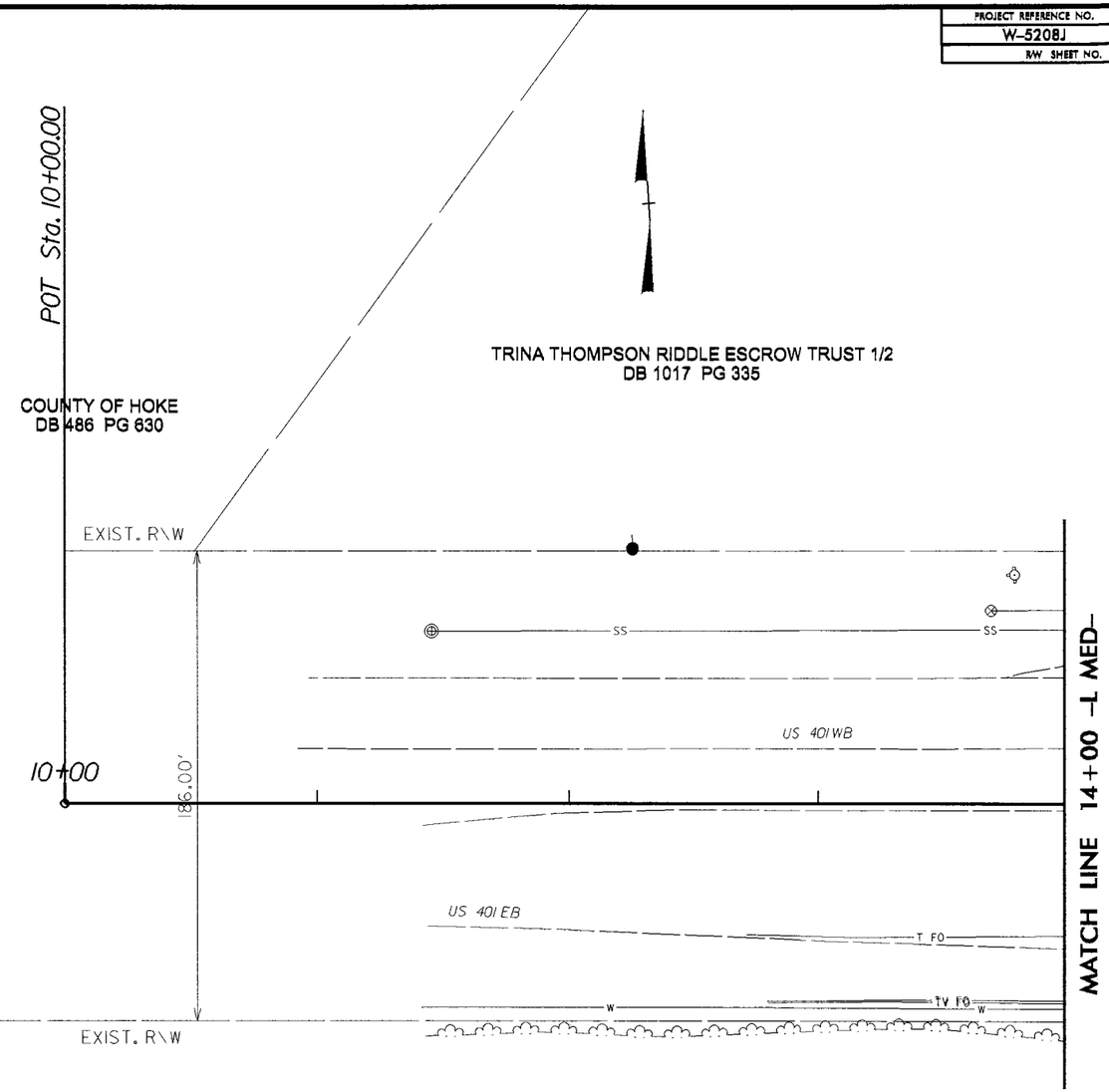

CUMBERLAND COUNTY HOSPITAL SYSTEM, INC
DB 913 PG 279

LEWIS E BROCK
DB 216 PG 031

50' 0 50' 100'

REVISIONS

8/17/99

28-MAY-2014 13:21
C:\Div8_proj\HOKE\nc401sr_1305\wgside_rd\psh\ecp\W-5208J_ECP3.dgn
$cmows_dgnsetup$(10/10/10)

PROJECT REFERENCE NO.	SHEET NO.
W-5208J	ECP-4
R/W SHEET NO.	

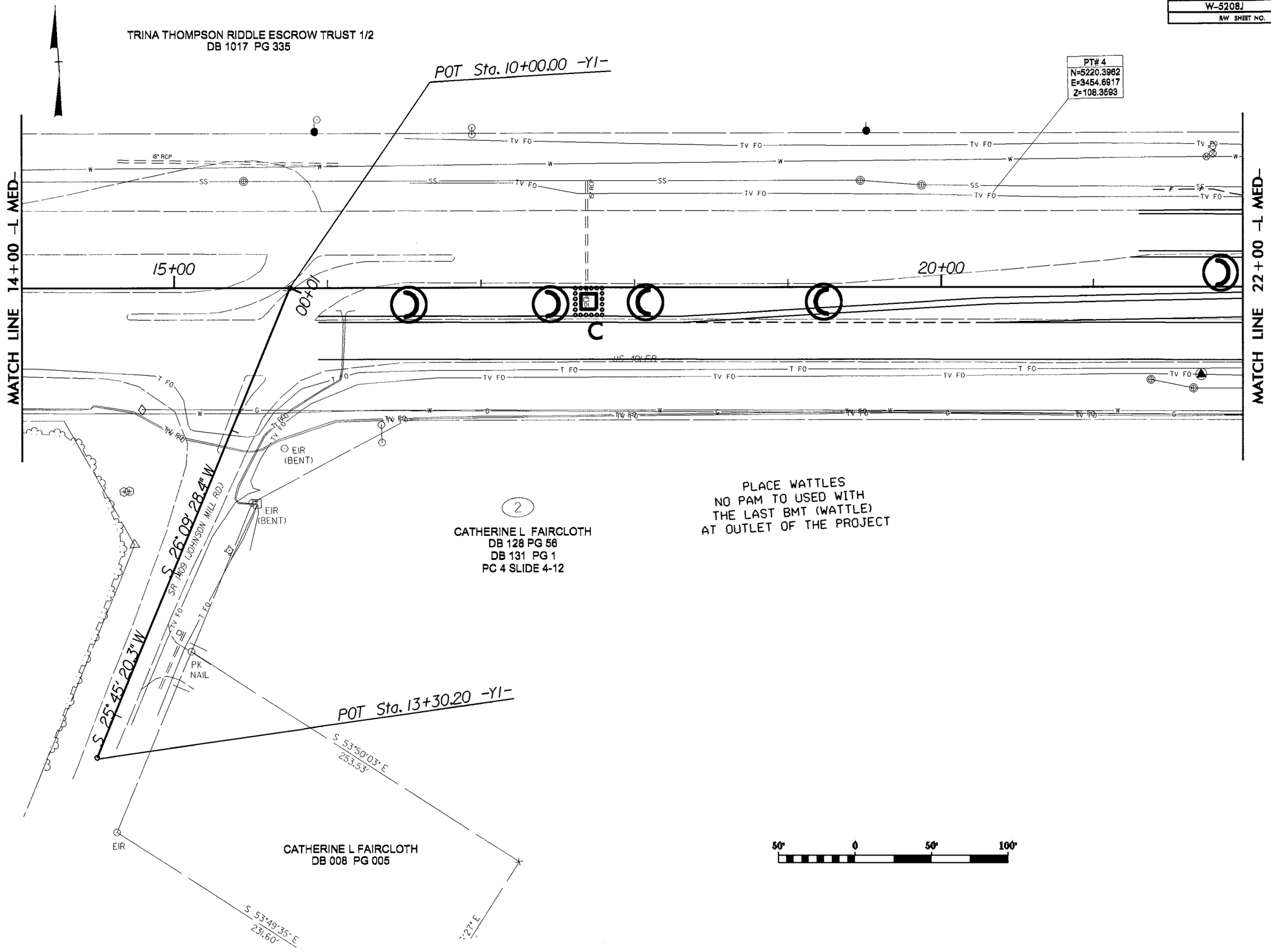

REVISIONS

8/17/99

28-MAY-2014 13:21
C:\div08-pr\ecs\sr-dj\HOKE\nc401\sr_1305\wayside-rd\psh\ecp\W-5208J_ECP4.dgn

PROJECT REFERENCE NO.	SHEET NO.
W-5208J	ECP-5
R/W SHEET NO.	

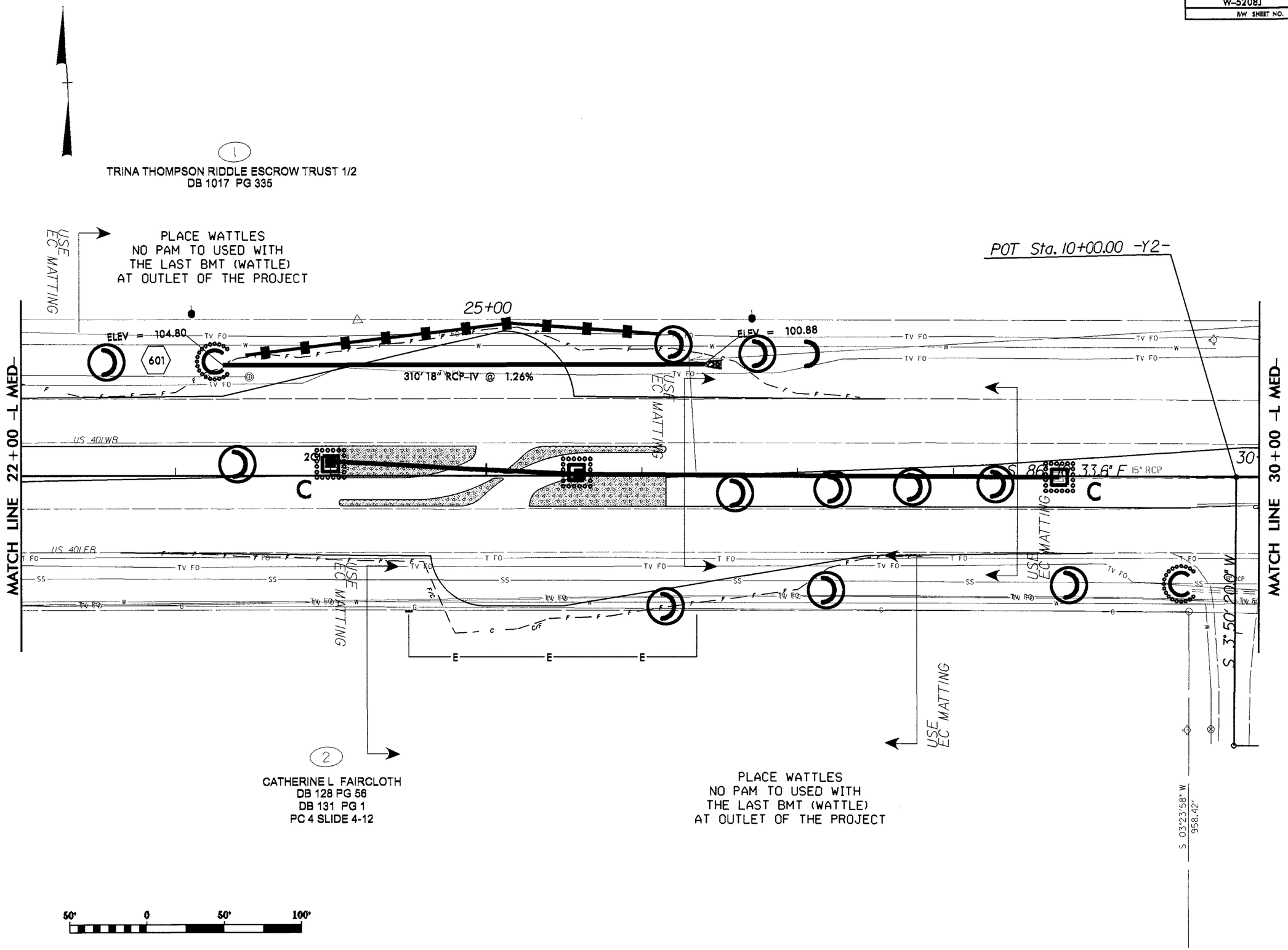

REVISIONS

8/17/99

12-JUN-2014 10:46
C:\div8-projects\rdu\HOKE\nc421bsr_1305(wayside-rd)\psh\ecp\W-5208J_ECP5.dgn
ashows

PROJECT REFERENCE NO.	SHEET NO.
W-5208J	ECP-6
R/W SHEET NO.	

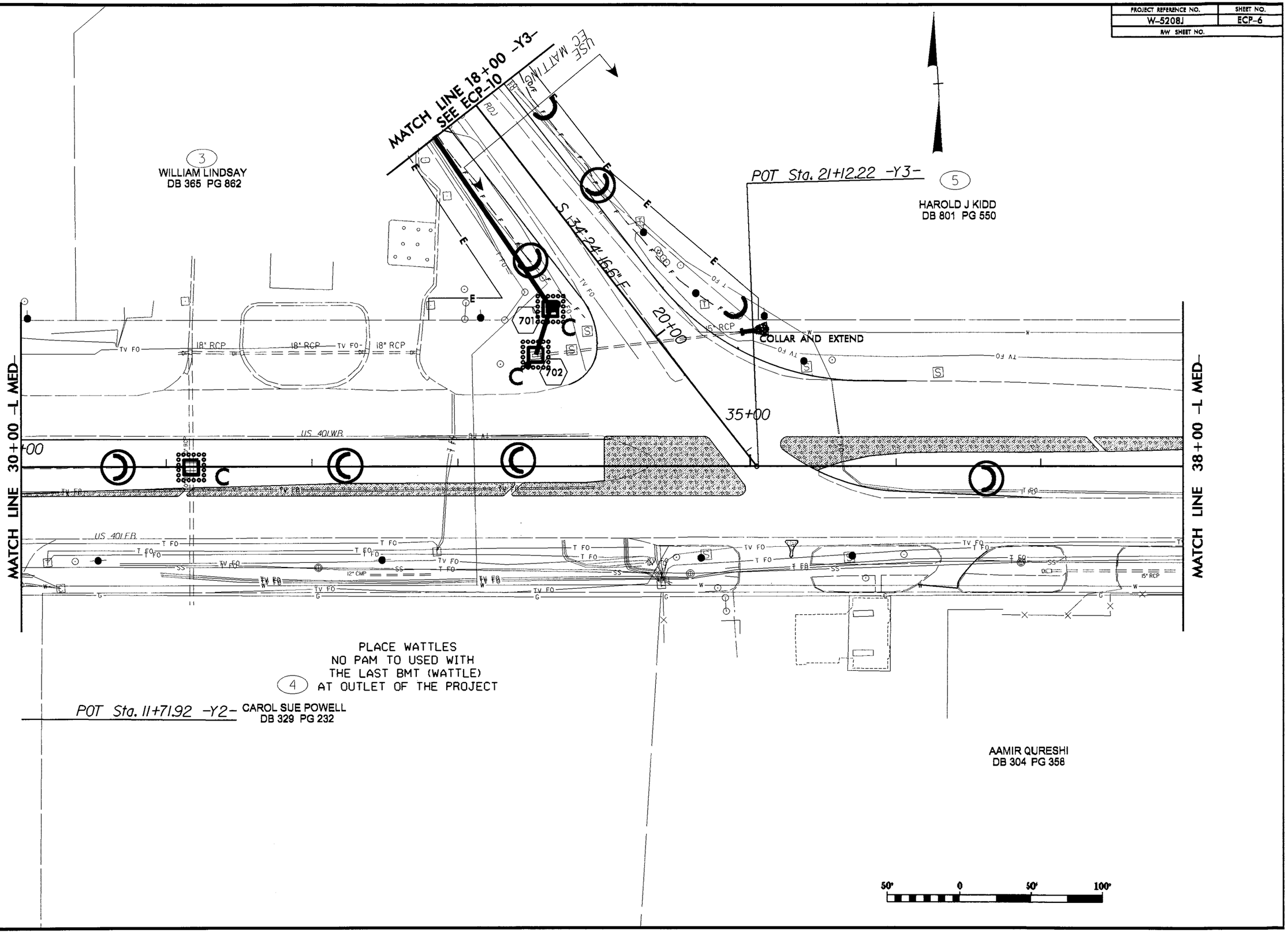

REVISIONS

8/17/99

28-MAY-2014 15:56
C:\div8_proj\ncdot\HOKE\nc401asr_1305\wayside_rd\psh\ecp\W-5208J_ECP6.dgn

PROJECT REFERENCE NO.	SHEET NO.
W-5208J	ECP-7
R/W SHEET NO.	

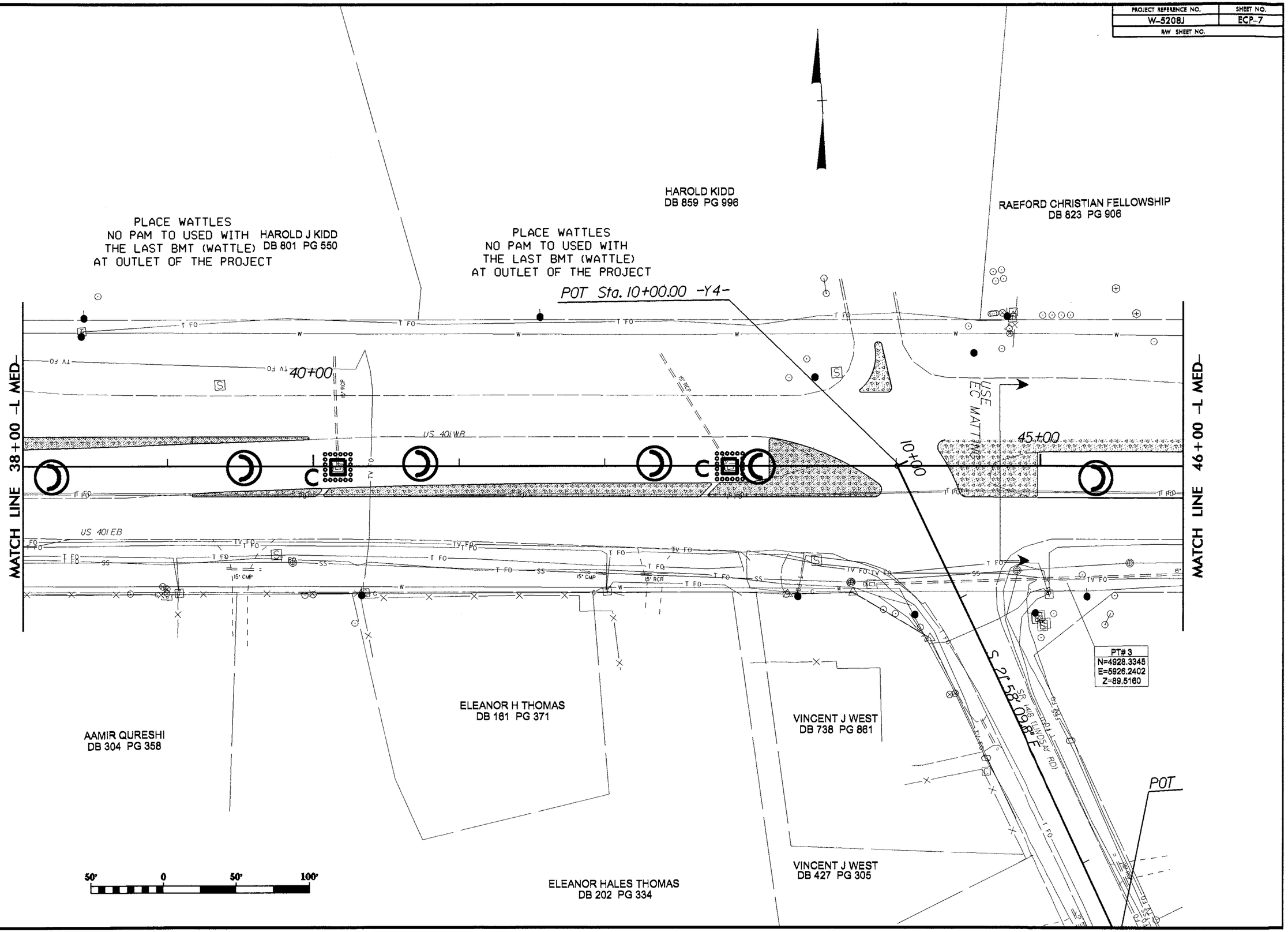

REVISIONS

8/17/99

28-MAY-2014 15:30
USER: rdu\HOKE\vnc401bs-1305\wayside_rdl\psh\ecp\W-5208J_ECP7.dgn
Microsoft PowerPoint 2010

PROJECT REFERENCE NO.	SHEET NO.
W-5208J	ECP-8
R/W SHEET NO.	

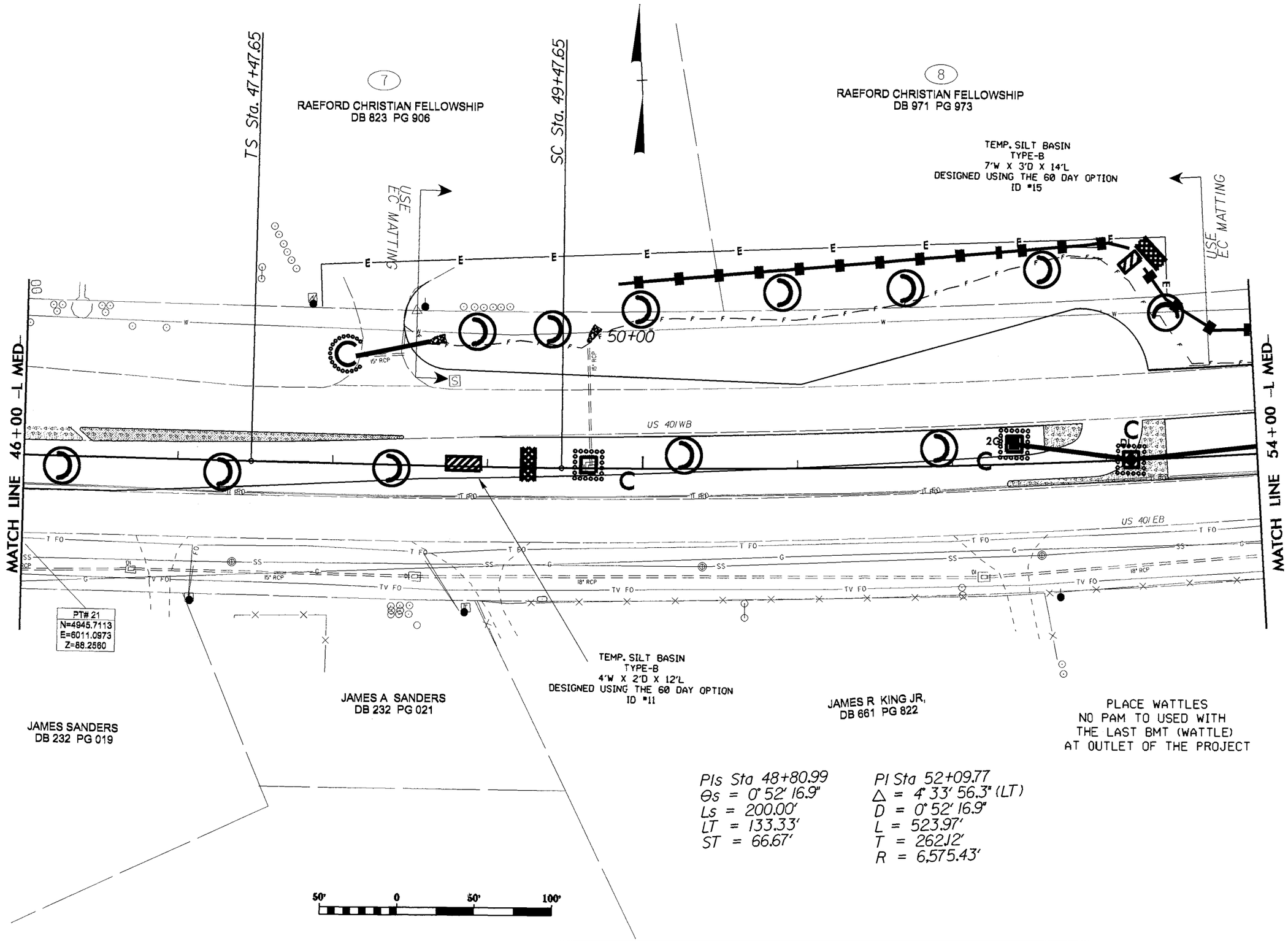

REVISIONS

8/17/99

28-MAY-2014 13:22
c:\pdive\pr2\ecp\ecp8.dgn
c:\pdive\pr2\ecp\ecp8.dgn
d:\HOKE\rc4018sr_1305\wayside_rd\psh\ecp\W-5208J_ECP8.dgn

PROJECT REFERENCE NO.	SHEET NO.
W-5208J	ECP-9
R/W SHEET NO.	

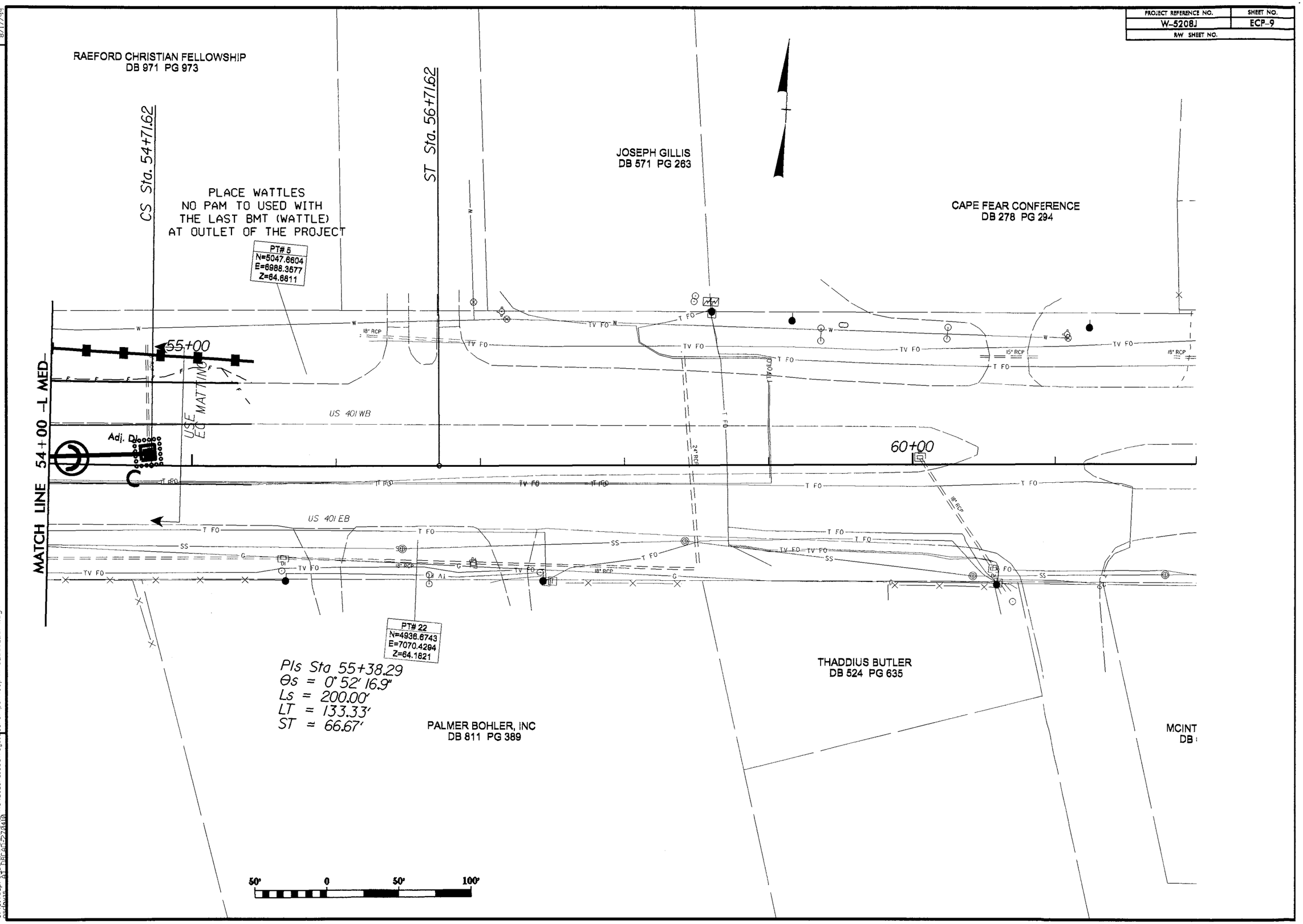

REVISIONS

8/17/99

28-MAY-2014 13:22
C:\Dlx\8-pr01e5.dgn

PROJECT REFERENCE NO.	SHEET NO.
W-5208J	ECP-10
R/W SHEET NO.	

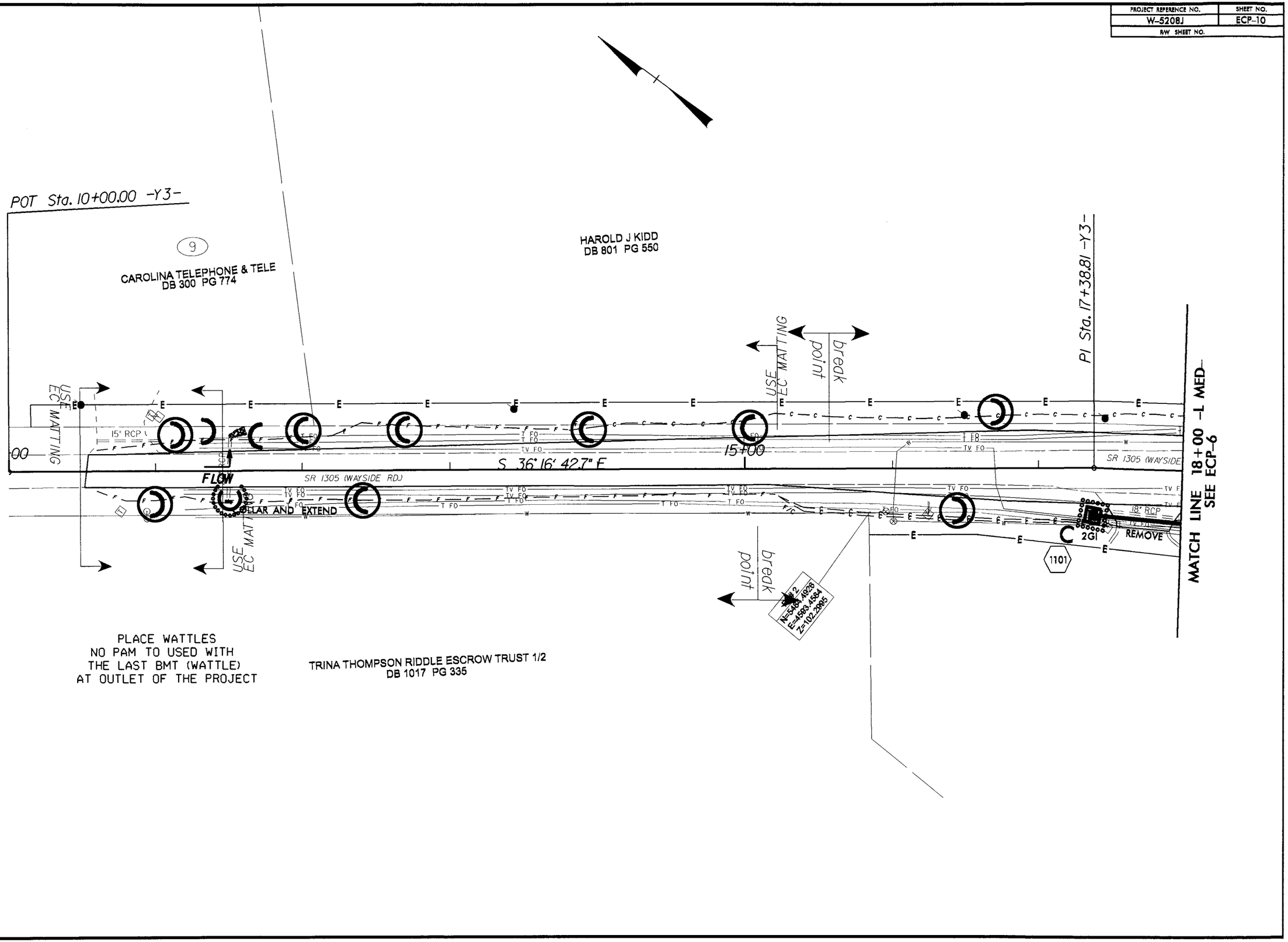

REVISIONS

8/17/99

12-JUN-2014 10:46
C:\dive8\projects\r-dg\HOKE\nc401\sr_1305\wayside_rd\psh\ecp\W-5208J_ECP10.dgn
PSHEUS AT DARRELL2\7410

PROJ. REFERENCE NO.	SHEET NO.
W-5208J	X-A

STATE OF NORTH CAROLINA
DIVISION OF HIGHWAYS

NOTE: EMBANKMENT COLUMN DOES NOT INCLUDE BACKFILL FOR UNDERCUT

CROSS-SECTION SUMMARY

Station L_Med	Uncl. Exc. (cu. yd.)	Embt (cu. yd.)	Station L_Med	Uncl. Exc. (cu. yd.)	Embt (cu. yd.)	Station L_Med	Uncl. Exc. (cu. yd.)	Embt (cu. yd.)	Station L_Med	Uncl. Exc. (cu. yd.)	Embt (cu. yd.)	Station Y3	Uncl. Exc. (cu. yd.)	Embt (cu. yd.)
16+00.00	0	0	26+60.00	19	24	37+60.00	0	4	48+60.00	11	13	12+80.00	3	7
16+20.00	2	1	26+80.00	17	24	37+80.00	0	5	48+80.00	17	19	13+00.00	3	7
16+40.00	3	1	27+00.00	15	22	38+00.00	0	6	49+00.00	16	22	13+20.00	3	7
16+60.00	3	2	27+20.00	13	17	38+20.00	0	7	49+20.00	16	23	13+40.00	3	6
16+80.00	2	3	27+40.00	11	14	38+40.00	0	8	49+40.00	16	21	13+60.00	3	4
17+00.00	2	3	27+60.00	9	14	38+60.00	0	8	49+60.00	16	16	13+80.00	4	3
17+20.00	2	4	27+80.00	7	15	38+80.00	0	9	49+80.00	20	13	14+00.00	5	2
17+40.00	1	5	28+00.00	7	15	39+00.00	0	10	50+00.00	21	26	14+20.00	8	1
17+60.00	1	7	28+20.00	8	14	39+20.00	0	10	50+20.00	18	40	14+40.00	10	1
17+80.00	1	9	28+40.00	7	13	39+40.00	0	9	50+40.00	14	43	14+60.00	9	1
18+00.00	2	6	28+60.00	7	15	39+60.00	0	9	50+60.00	11	41	14+80.00	9	1
18+20.00	2	3	28+80.00	6	16	39+80.00	0	13	50+80.00	11	34	15+00.00	11	1
18+40.00	3	3	29+00.00	6	12	40+00.00	0	17	51+00.00	10	28	15+20.00	18	1
18+60.00	3	2	29+20.00	7	9	40+20.00	0	21	51+20.00	11	33	15+40.00	26	1
18+80.00	4	2	29+40.00	6	7	40+40.00	0	21	51+40.00	14	48	15+60.00	26	1
19+00.00	5	1	29+60.00	5	6	40+60.00	0	19	51+60.00	16	64	15+80.00	23	1
19+20.00	5	2	29+80.00	4	5	40+80.00	0	14	51+80.00	18	77	16+00.00	24	1
19+40.00	6	3	30+00.00	3	3	41+00.00	0	11	52+00.00	18	94	16+20.00	24	1
19+60.00	6	4	30+20.00	2	4	41+20.00	0	11	52+20.00	16	110	16+40.00	23	1
19+80.00	7	5	30+40.00	2	5	41+40.00	0	10	52+40.00	18	120	16+60.00	23	1
20+00.00	8	6	30+60.00	2	6	41+60.00	0	10	52+60.00	16	161	16+80.00	23	2
20+20.00	8	6	30+80.00	2	7	41+80.00	0	9	52+70.00	6	92	17+00.00	23	3
20+40.00	8	7	31+00.00	2	9	42+00.00	0	7	52+80.00	7	88	17+20.00	21	3
20+60.00	8	7	31+20.00	2	7	42+20.00	1	6	53+00.00	15	162	17+40.00	20	4
20+80.00	9	6	31+40.00	2	5	42+40.00	1	6	53+20.00	15	123	17+60.00	24	2
21+00.00	9	6	31+60.00	2	4	42+60.00	0	8	53+35.00	9	45	17+80.00	24	0
21+20.00	8	7	31+80.00	2	2	42+80.00	0	11	53+40.00	2	4	18+00.00	21	0
21+40.00	9	8	32+00.00	2	1	43+00.00	0	9	53+60.00	3	13	18+20.00	16	1
21+60.00	11	10	32+20.00	2	1	43+20.00	4	3	53+80.00	4	11	18+40.00	12	3
21+80.00	12	12	32+40.00	2	1	43+40.00	6	0	54+00.00	4	10	18+60.00	11	4
22+00.00	11	14	32+60.00	2	0				54+20.00	4	10	18+80.00	10	4
22+20.00	9	16	32+80.00	2	1	Station L_Med	Uncl. Exc. (cu. yd.)	Embt (cu. yd.)	54+40.00	4	7	19+00.00	9	3
22+40.00	10	14	33+00.00	2	3				54+45.98	1	1	19+20.00	7	2
22+60.00	11	12	33+20.00	2	2				54+60.00	2	9	19+40.00	6	2
22+80.00	11	12	33+40.00	2	1	44+80.00	0	0	54+80.00	3	13	19+60.00	4	2
23+00.00	12	12	33+60.00	2	1	45+00.00	10	0	55+00.00	3	4	19+80.00	3	3
23+20.00	11	13	33+80.00	2	1	45+20.00	3	1	55+20.00	3	3	20+00.00	3	4
23+40.00	13	17	34+00.00	9	0	45+40.00	2	1	55+40.00	2	2	20+20.00	3	8
23+60.00	15	22	34+20.00	13	0	45+60.00	1	1						
23+80.00	17	22				45+80.00	1	1	Station Y3	Uncl. Exc. (cu. yd.)	Embt (cu. yd.)			
24+00.00	19	22	Station L_Med	Uncl. Exc. (cu. yd.)	Embt (cu. yd.)	46+00.00	1	2						
24+20.00	19	22				46+20.00	1	3						
24+40.00	19	20				46+40.00	1	4	10+60.00	0	0			
24+60.00	20	18	35+60.00	0	0	46+60.00	1	5	10+80.00	0	0			
24+80.00	27	20	35+80.00	4	0	46+80.00	1	6	11+00.00	1	1			
25+00.00	34	21	36+00.00	5	0	47+00.00	2	6	11+20.00	1	1			
25+20.00	36	18	36+20.00	4	1	47+20.00	3	7	11+40.00	1	3			
25+40.00	34	19	36+40.00	3	1	47+40.00	3	7	11+60.00	1	3			
25+60.00	27	24	36+60.00	3	1	47+60.00	4	7	11+80.00	2	4			
25+80.00	22	31	36+80.00	2	2	47+80.00	5	7	12+00.00	2	4			
26+00.00	21	35	37+00.00	2	2	48+00.00	6	7	12+20.00	2	4			
26+20.00	18	36	37+20.00	1	3	48+20.00	6	8	12+40.00	3	6			
26+40.00	18	30	37+40.00	1	3	48+40.00	5	9	12+60.00	3	7			

Approximate quantities only. Unclassified excavation, borrow excavation, fine grading, clearing and grubbing, silt excavation and removal of concrete pavement will be paid for at the lump sum price for "Grading".

NOTE:
Shoulder Material included in Embankment quantities listed

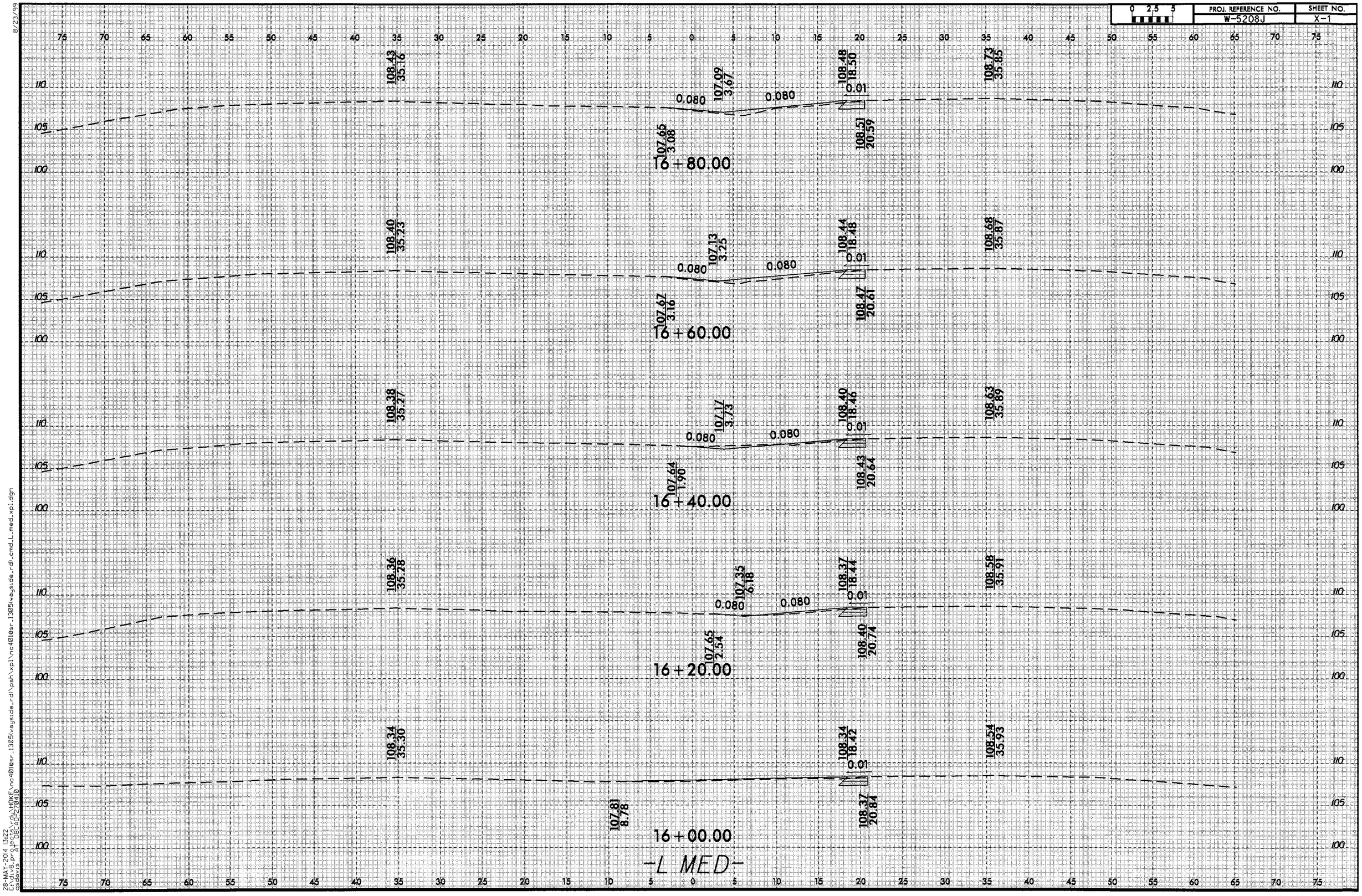

8/23/99

28-MAY-2014 13:22
C:\dive8.pr2 ac5_cd_HDKE\nc401esr_1305\wagside_rd\psh\xpl\nc401esr_1305\wagside_rd_cmd_L_med_xpl.dgn
Cl Gavin

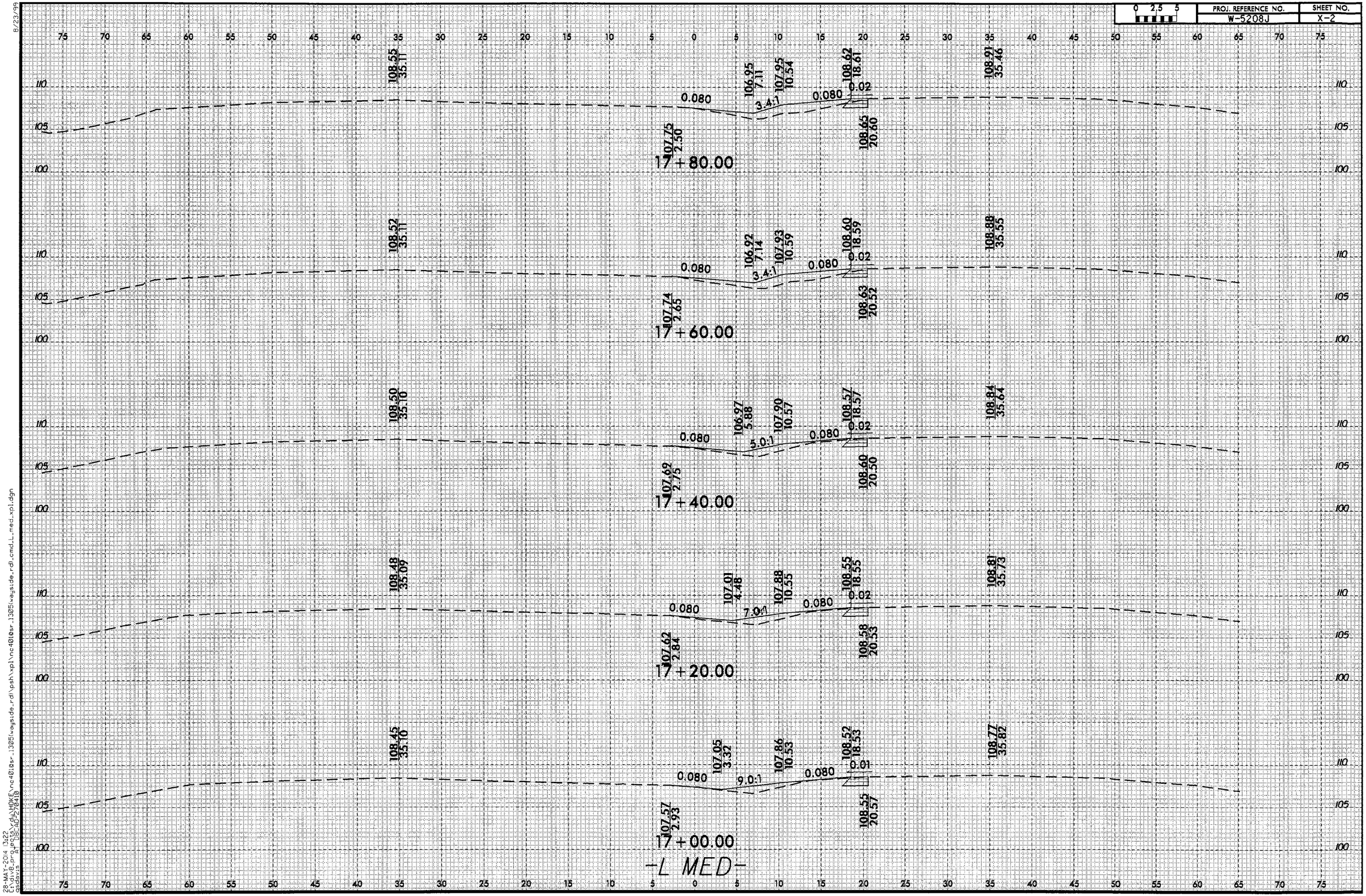
0 2.5 5
PROJ. REFERENCE NO.
W-5208J
SHEET NO.
X-2
17+80.00
108.55
35.17
106.95
7.11
107.95
10.54
108.62
18.61
108.91
35.46
107.75
2.50
108.65
20.60
0.080
3.4:1
0.080
0.02
17+60.00
108.52
35.11
106.92
7.14
107.93
10.59
108.60
18.59
108.88
35.55
107.74
2.65
108.63
20.52
0.080
3.4:1
0.080
0.02
17+40.00
108.50
35.10
106.97
5.88
107.90
10.57
108.57
18.57
108.84
35.64
107.69
2.75
108.60
20.50
0.080
5.0:1
0.080
0.02
17+20.00
108.48
35.09
107.01
4.48
107.88
10.55
108.55
18.55
108.81
35.73
107.62
2.84
108.58
20.53
0.080
7.0:1
0.080
0.02
17+00.00
108.45
35.10
107.05
3.32
107.86
10.53
108.52
18.53
108.77
35.82
107.57
2.93
108.55
20.57
0.080
9.0:1
0.080
0.01
-L MED-
110
105
100
75 70 65 60 55 50 45 40 35 30 25 20 15 10 5 0 5 10 15 20 25 30 35 40 45 50 55 60 65 70 75
8/23/99
28-MAY-2014 13:22
t:\div8_projects\rd_u\HOKE\nc401@sr_1305\wayside_rd\psh\xpl\nc401@sr_1305\wayside_rd_cmd_L_med_xpl.dgn
cadman
ncdot\ag27041@

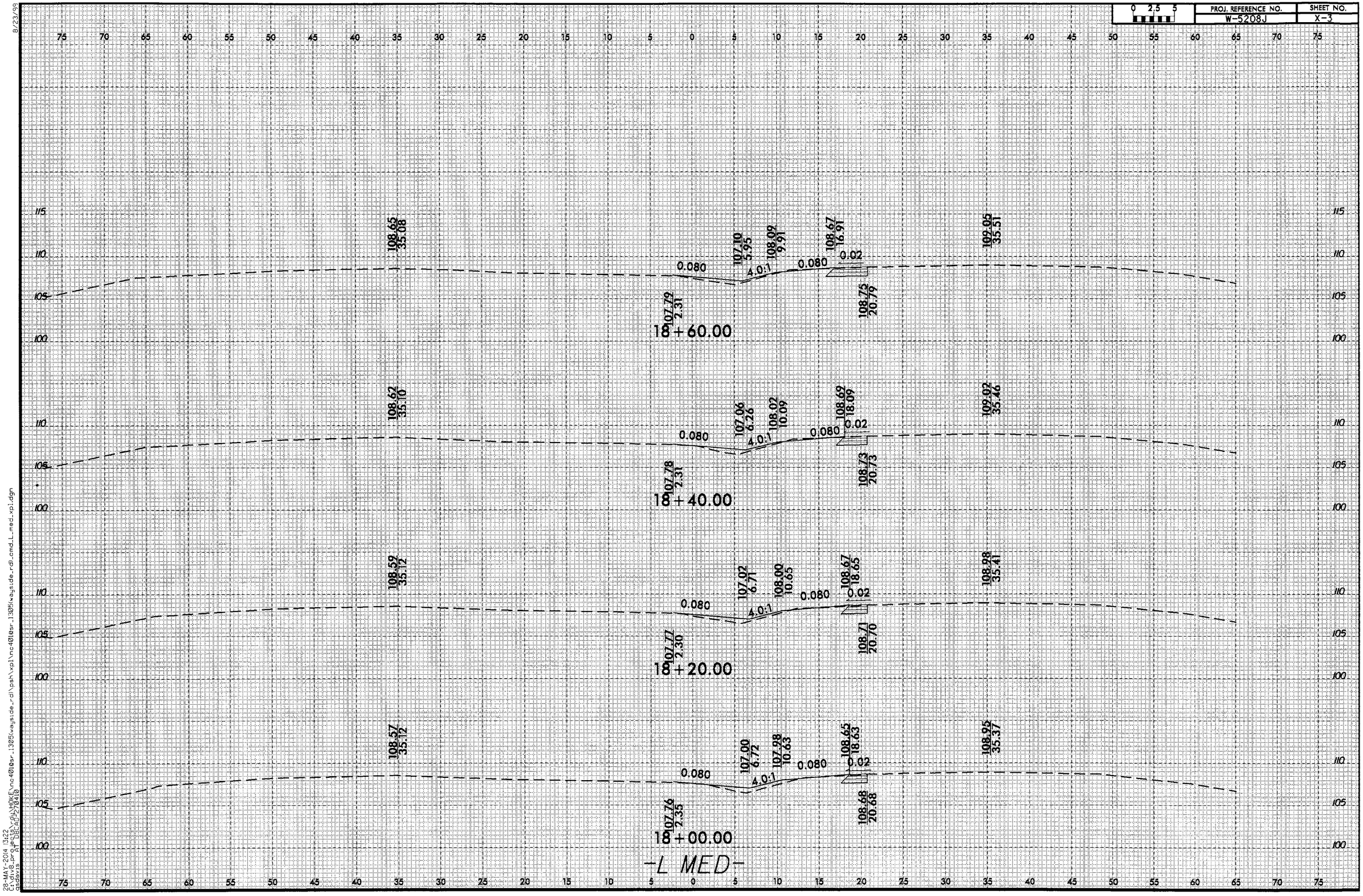
0 2.5 5
PROJ. REFERENCE NO.
W-5208J
SHEET NO.
X-3
18+60.00
108.65
35.08
107.79
2.31
107.10
5.95
108.09
9.91
108.67
16.91
108.75
20.79
109.05
35.51
0.080
4.0:1
0.080
0.02
18+40.00
108.62
35.10
107.78
2.31
107.06
6.26
108.02
10.09
108.69
18.09
108.73
20.73
109.02
35.46
18+20.00
108.59
35.12
107.77
2.30
107.02
6.71
108.00
10.65
108.67
18.65
108.71
20.70
108.98
35.41
18+00.00
108.57
35.12
107.76
2.35
107.00
6.72
107.98
10.63
108.65
18.63
108.68
20.68
108.95
35.37
-L MED-
8/23/99
28-MAY-2014 13:22
c:\dv6.projects\ru\HOVE\nc4018sr_1305\wayside_rd\psh\xpl\nc4018sr_1305\wayside_rd\cmd_L_med_xpl.dgn
$$$$USER$$$$
$$$$DATE$$$$

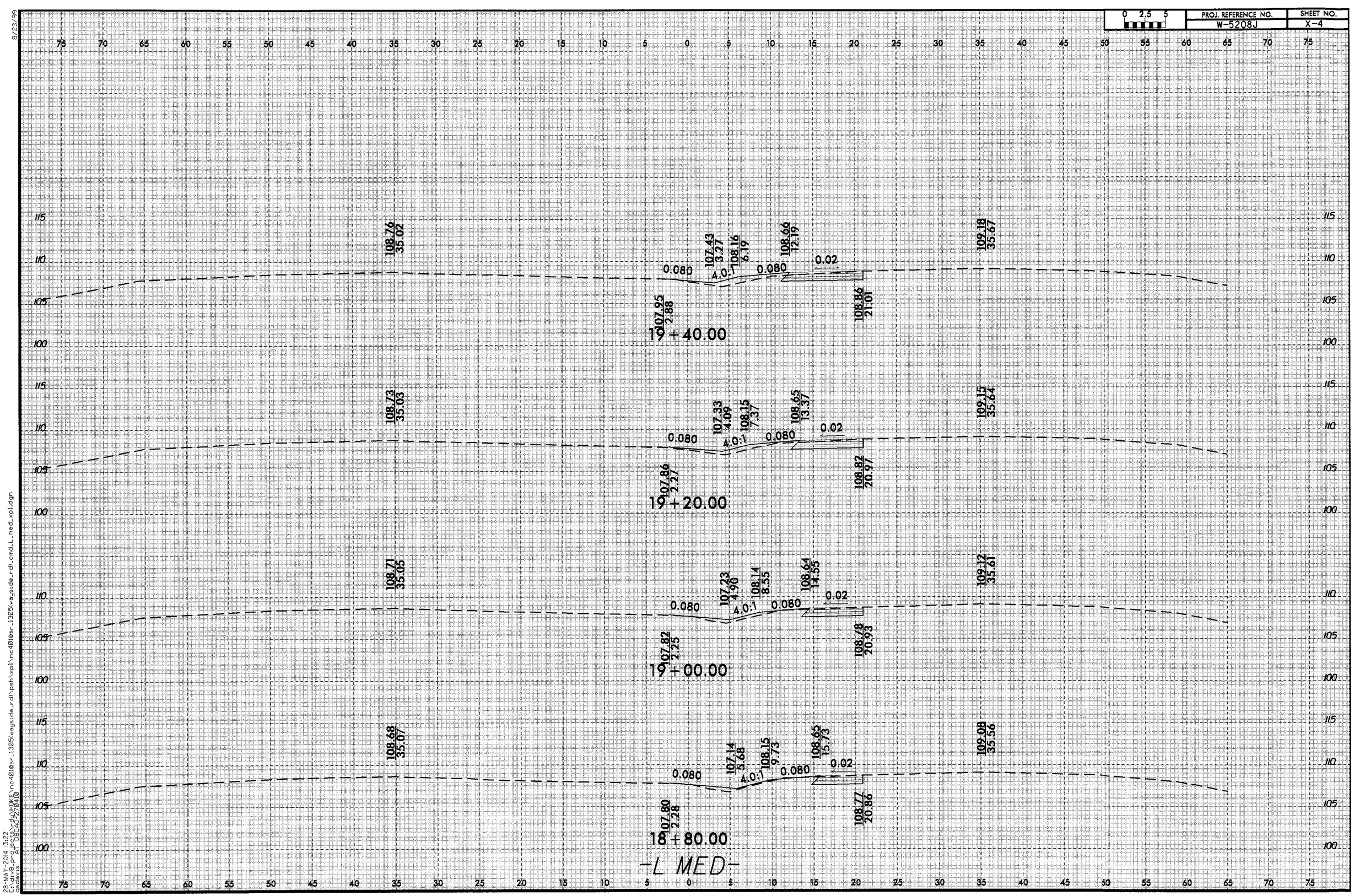

8/23/99

28-MAY-2014 13:22
C:\div8_projects\rdy\HOKE\nc4010sr_1305\wayside_rdl\psh\xpl\nc4010sr_1305\wayside_rdl_cmd_L_med_xpl.dgn
aadavis
FILE: 08CAD2T0410

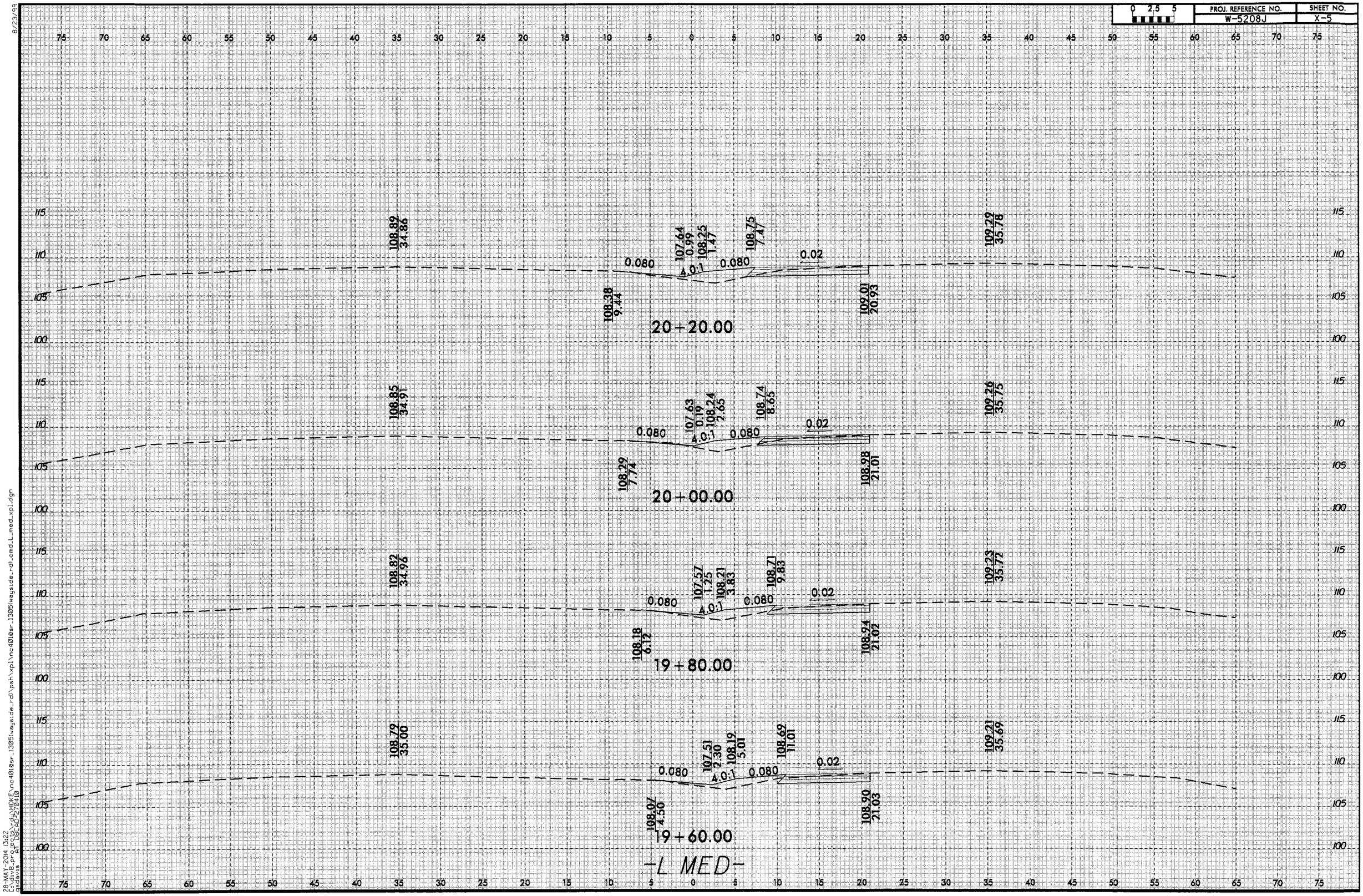

8/23/99
28-MAY-2014 13:22
L:\div8_projects\rdu\HOKE\nc401@sr_1305\wayside_rd\psh\xpl\nc401@sr_1305(wayside_rd).cmd_L_med_xpl.dgn
asdavis
21 DB:ab3276410

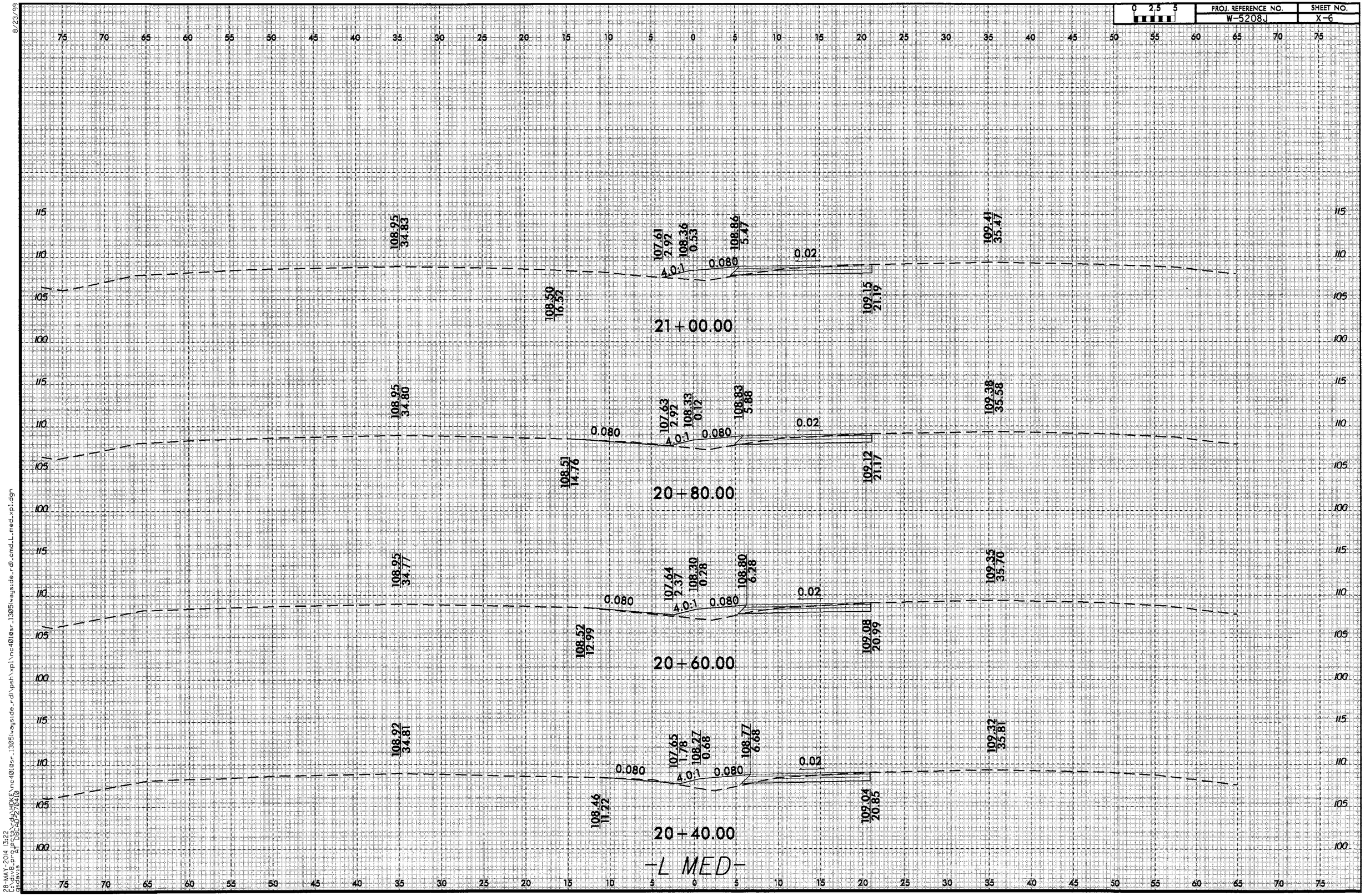
0 2.5 5
PROJ. REFERENCE NO.
W-5208J
SHEET NO.
X-6
21+00.00
108.95
34.83
107.61
2.92
108.36
0.53
108.86
5.47
0.02
0.080
4:0:1
108.50
16.52
109.15
21.19
109.41
35.47
20+80.00
108.95
34.80
107.63
2.92
108.33
0.12
108.83
5.88
0.080
0.02
108.51
14.76
109.12
21.17
109.38
35.58
20+60.00
108.95
34.77
107.64
2.37
108.30
0.28
108.80
6.28
0.080
0.02
108.52
12.99
109.08
20.99
109.35
35.70
20+40.00
108.92
34.81
107.65
1.78
108.27
0.68
108.77
6.68
0.080
0.02
108.46
11.22
109.04
20.85
109.32
35.81
-L MED-
8/23/99
28-MAY-2014 13:22
E:\div8_projects\rdl\HOKE\nc4010sr_1305\wayside_rdl\psh\xpl\nc4010sr_1305\wayside_rdl_omd_L_med_xpl.dgn
gadavis
A: 08CAD/2704/0

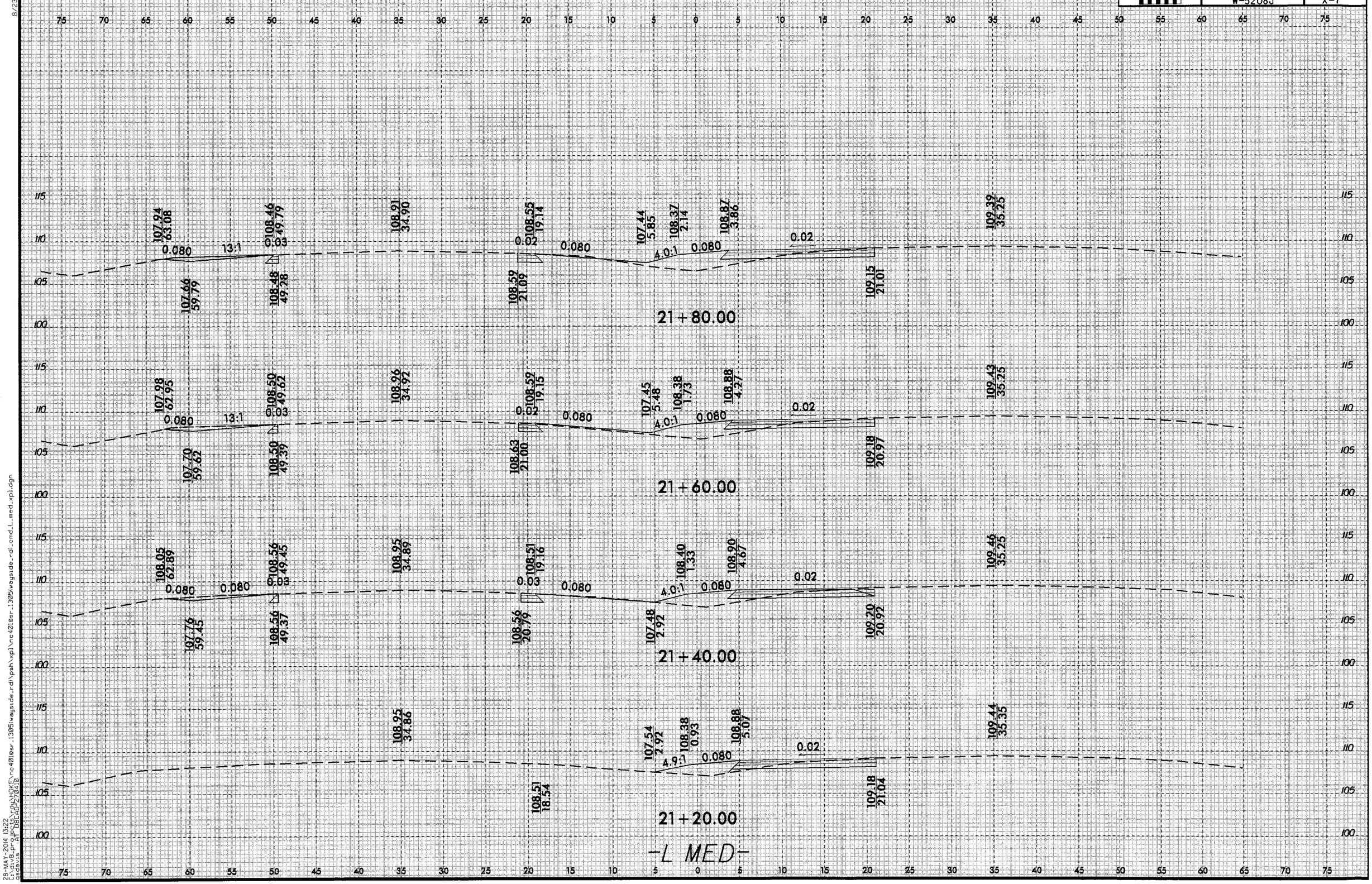

8/23/99
28-MAY-2014 13:22
C:\div8_projects\rdwy\NCEX\nc4010sr_1305\wayside_rd\psh\xpl\nc4010sr_1305\wayside_rd_omd_L_med.xpl.dgn
asbavis AT DBCADZ70410

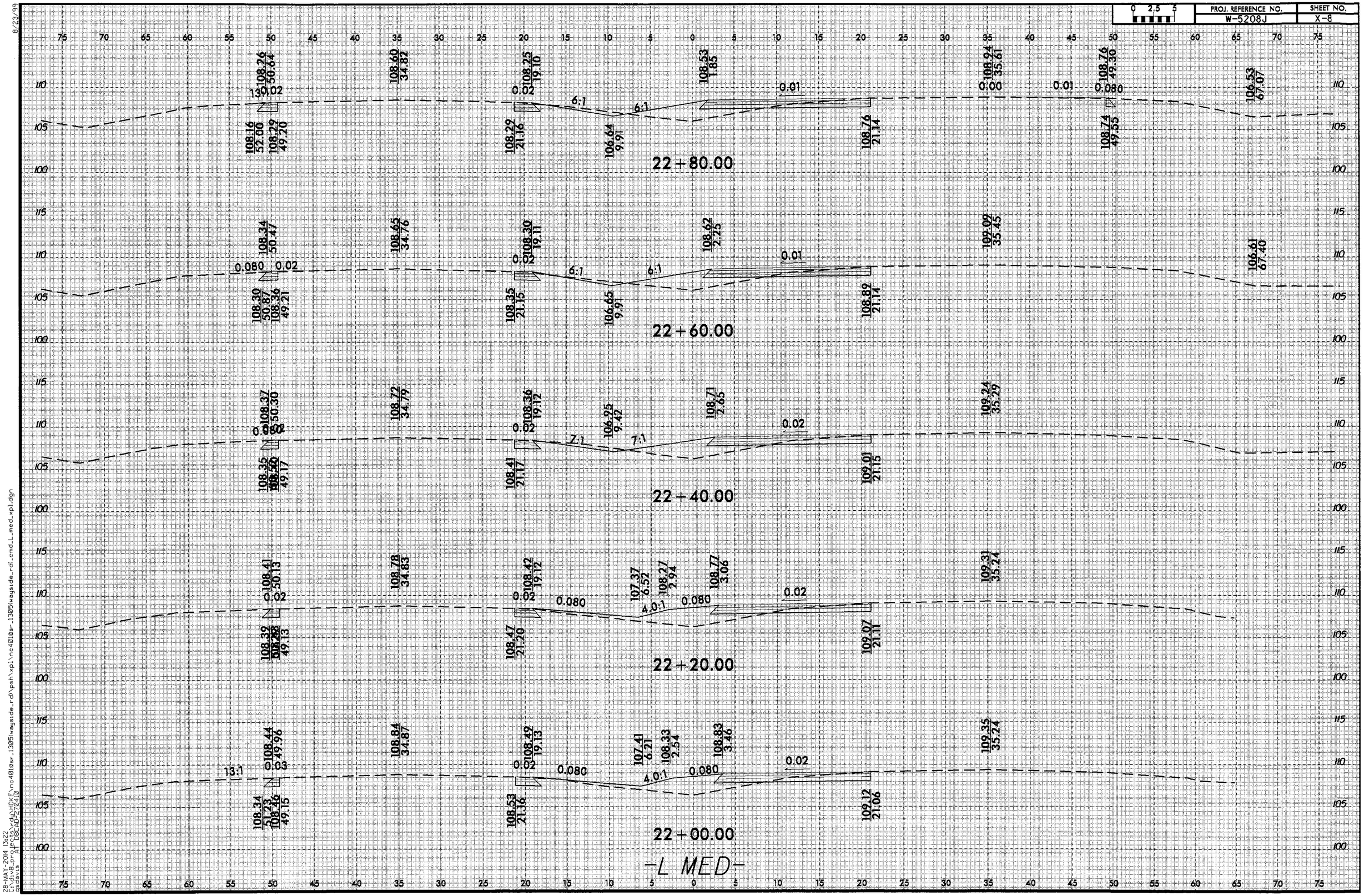

8/23/99

28-MAY-2014 13:22
C:\dive8.projects\ndot\PDF\nc4010sr_1305\wayside_rd\psh\xpl\nc4010sr_1305\wayside_rd\cmd_L_med_xpl.dgn
Bentley MicroStation V8 XM (08.11.09.618)

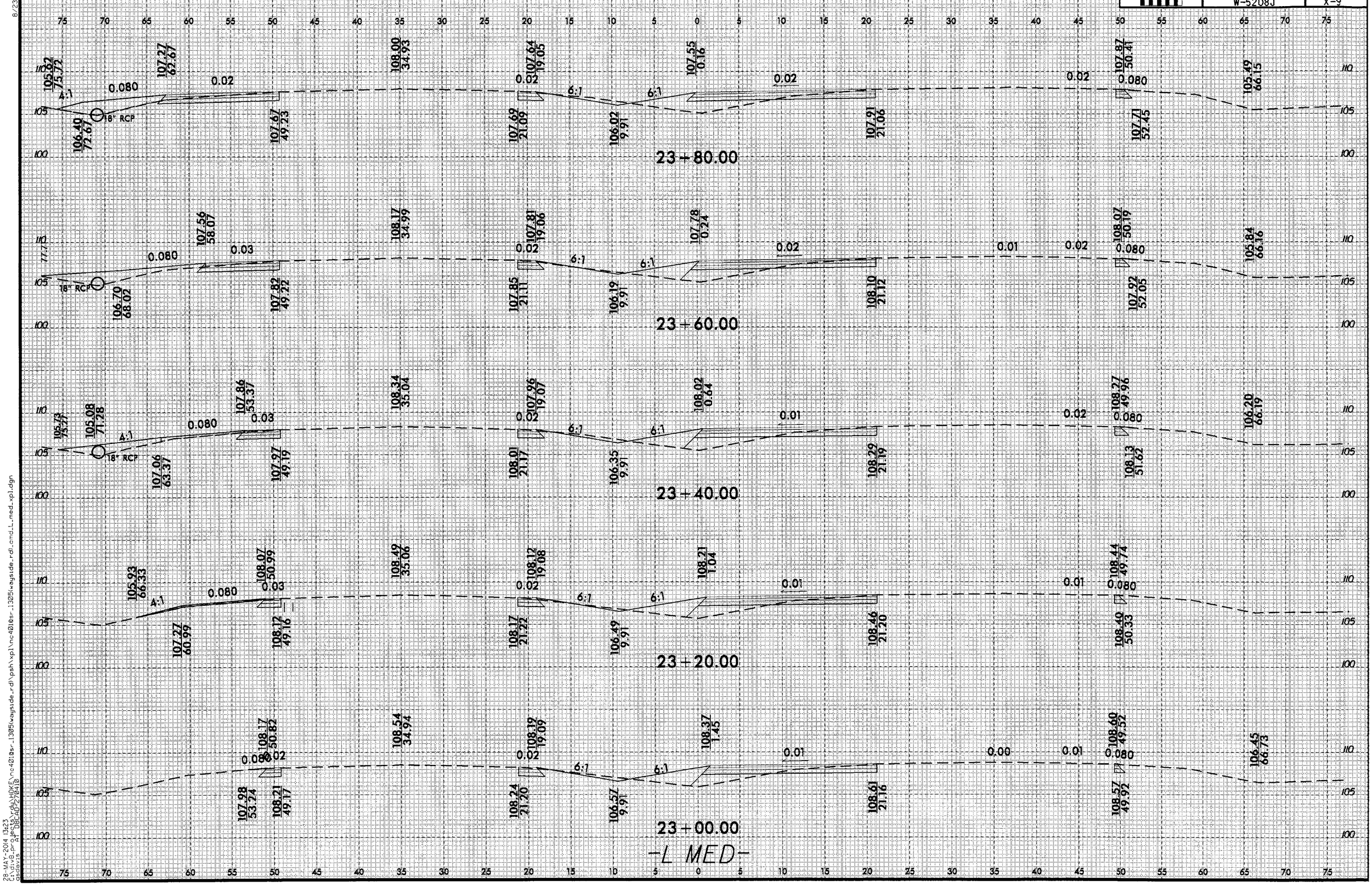

8/23/99
28-MAY-2014 13:23
G:\div8_projects\rdu\HOKE\nc401@sr_1305\wayside_rd\psh\xpl\nc401@sr_1305(wayside_rd)_cmd_L_med_xpl.dgn
Bentley Systems, Inc. V08.11.07.618

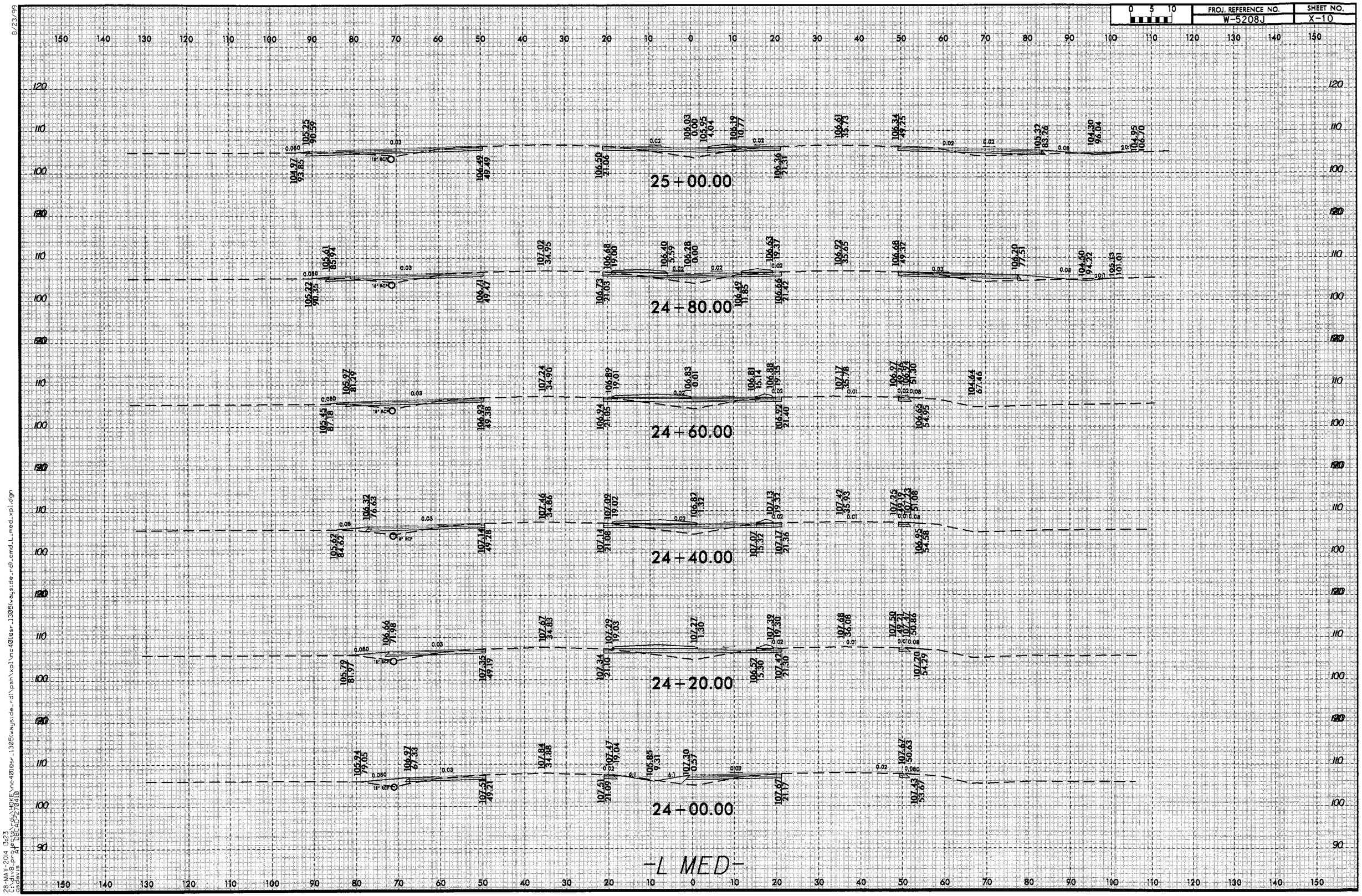

8/23/99
28-MAY-2014 13:23
C:\div8-Proj\ec30-cd\HDK(E)\nc401ds-1305\wayside_rd\psn\xpl\nc401ds-1305(wayside_rd)_cmd_L_med_xpl.dgn
Settings: A1 DEC-D-20x40

PROJ. REFERENCE NO.	SHEET NO.
W-5208J	X-11

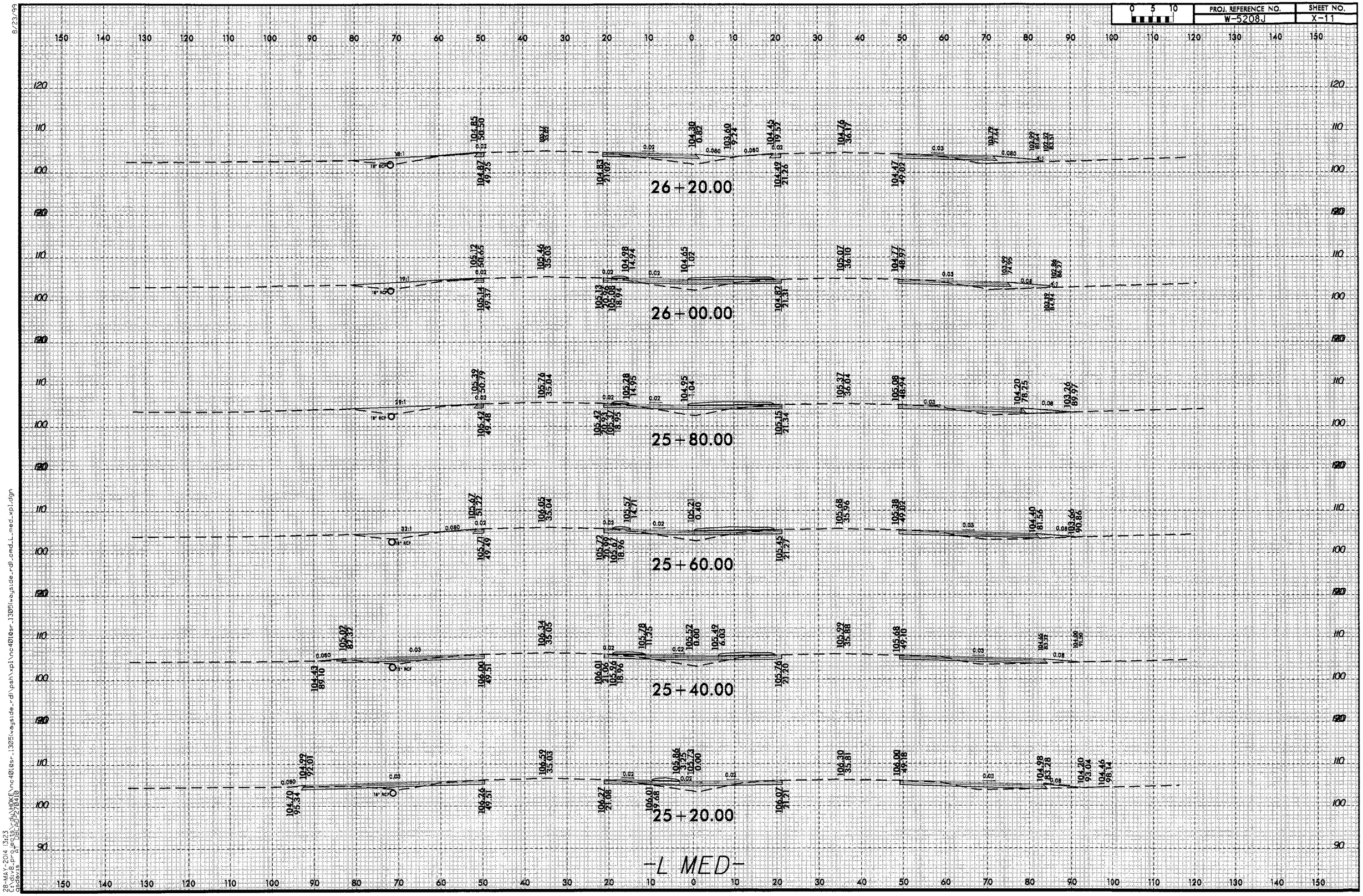

8/23/99
28-MAY-2014 13:23
C:\div8_projects\hdlhdk(\nc401ps-1305(wayside_rd)\psh\xpl\nc401ps-1305(wayside_rd)_cmd_L_med_xpl.dgn
ddavis DECAD-270410

8/23/99

0 5 10	PROJ. REFERENCE NO.	SHEET NO.
	W-5208J	X-12

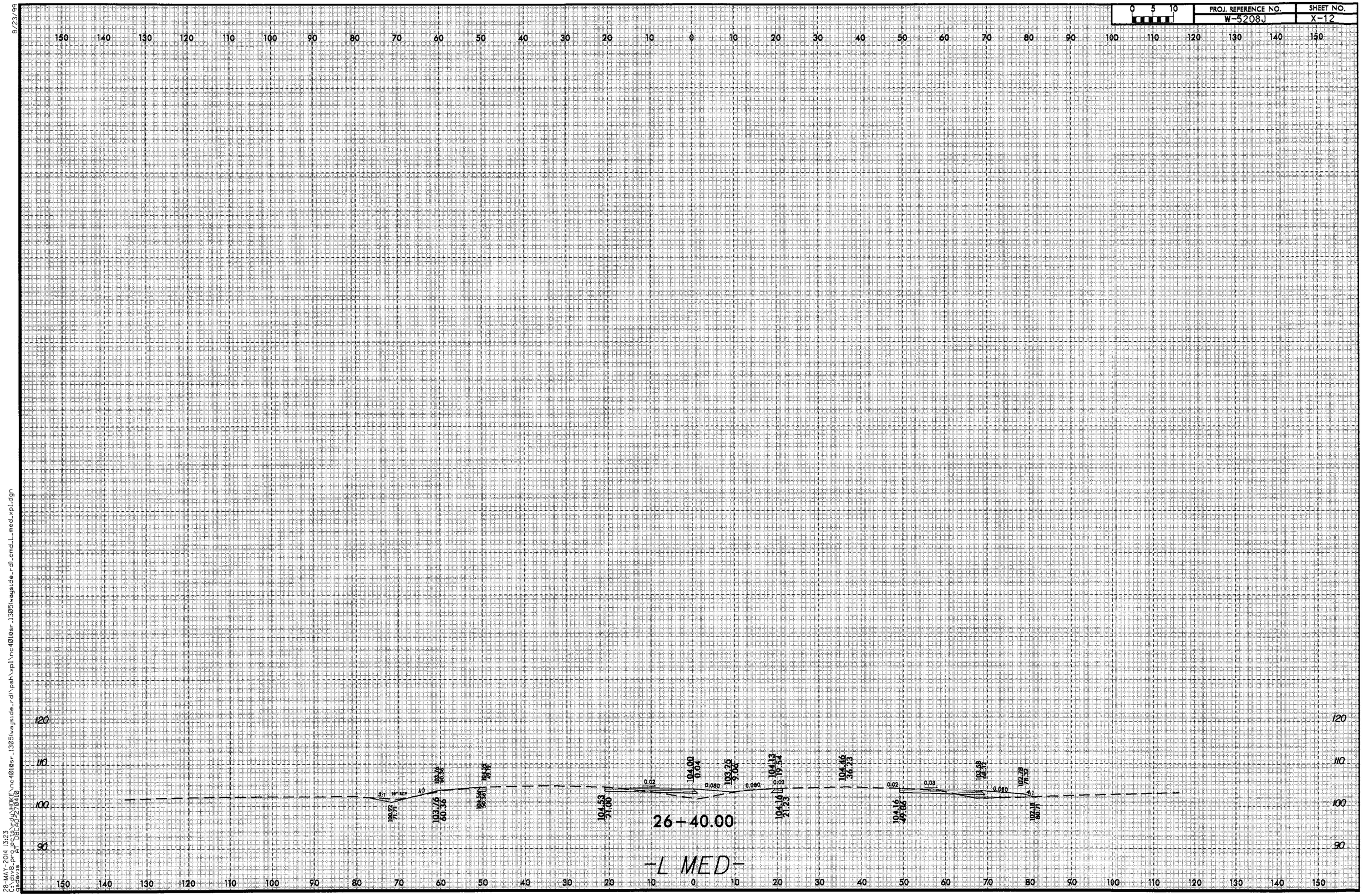

28-MAY-2014 13:23
C:\dgn8_projects\rdy\HOKIE\nc4010sr_1305\wayside_rd\psh\xpl\nc4010sr_1305\wayside_rd_cmd_L_med.xpl.dgn
aadavis AT DBO0J2704W0

PROJ. REFERENCE NO.	SHEET NO.
W-5208J	X-13

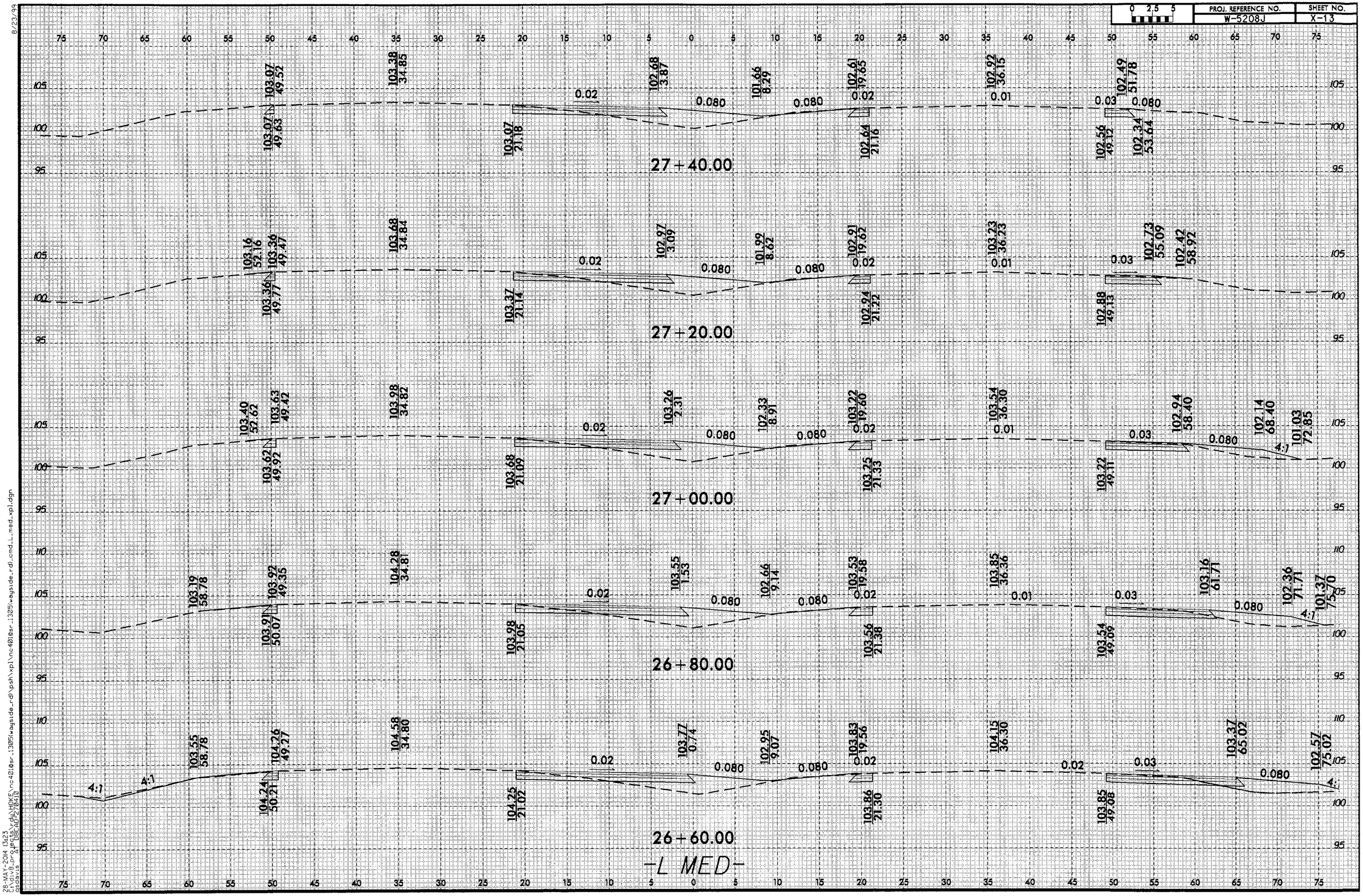

8/23/99

28-MAY-2014 13:23
C:\Users\pr9_lec08\AppData\Local\Temp\HOKE\nc4018sr_1305\wayside_rd\psh\xpl\nc4018sr_1305\wayside_rd\cmd_L_med_xpl.dgn
pscentre, pl_DEC4DW2704A2

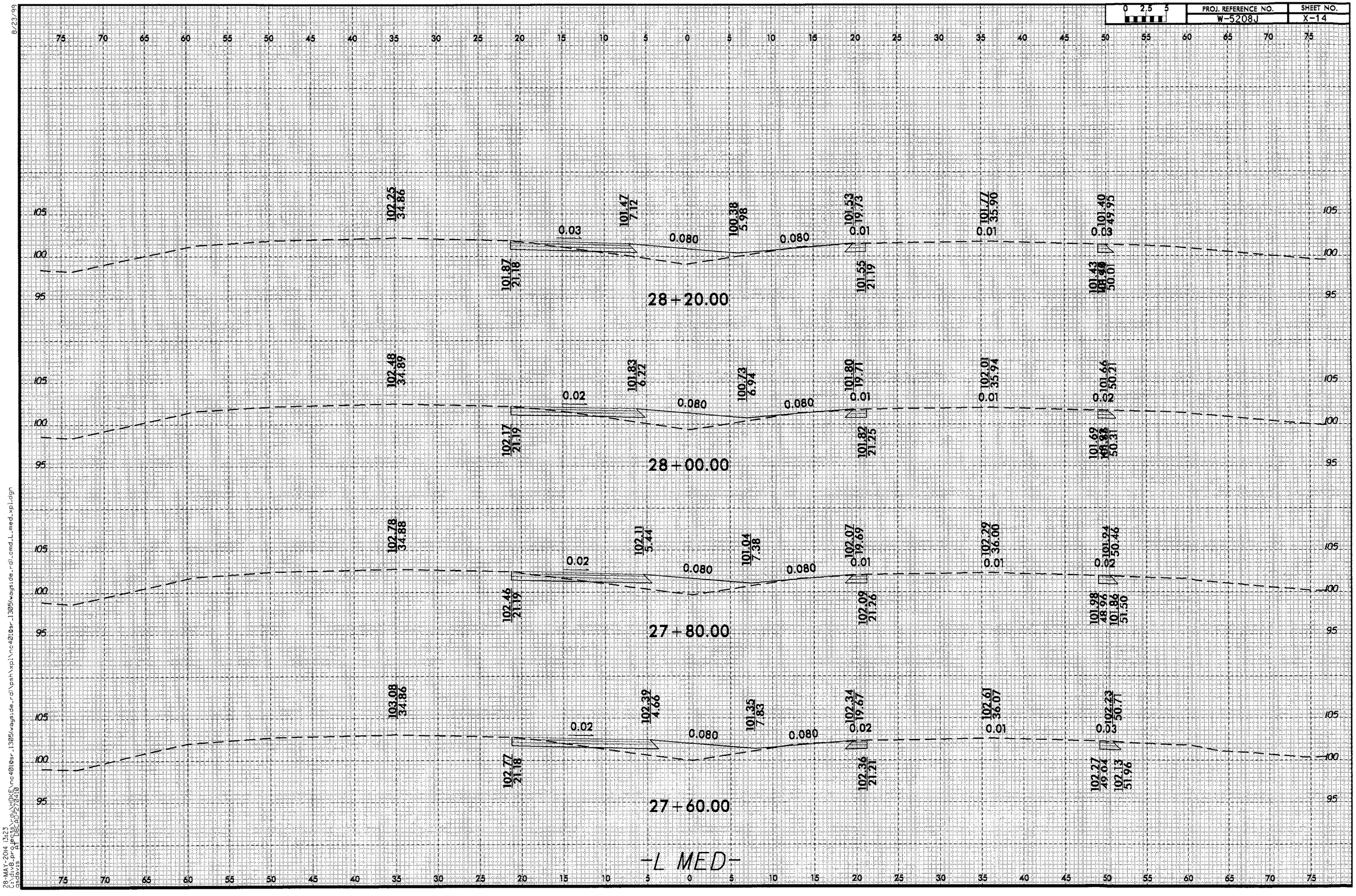

8/23/99

28-MAY-2014 13:23
C:\div8-projects\d0\HDX(5)\nc4018sr_1305\wayside_rd\pshxpl\nc4018sr_1305\wayside_rd_cmd_L_med.xpl.dgn
ssbaxs A1 DGN 0 0 270 420

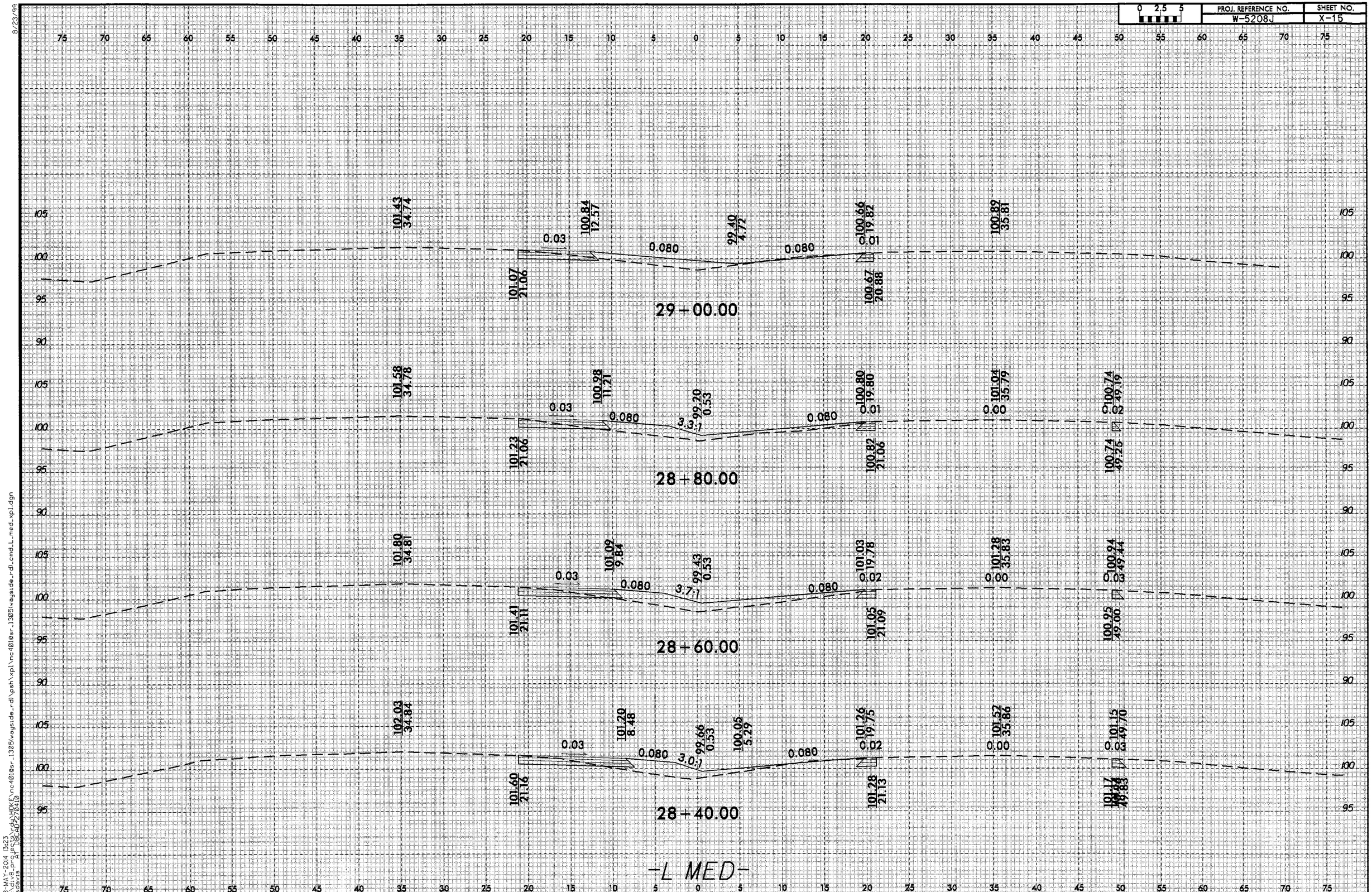

8/23/99

28-MAY-2014 13:23
C:\div8_projects\dgn\HOKE(nc40l8sr_1305)wayside_rdl\psh\xpl\nc40l8sr_1305(wayside_rdl_cmd_L_med_xpl.dgn
cesavis A1 D8GAD-270410

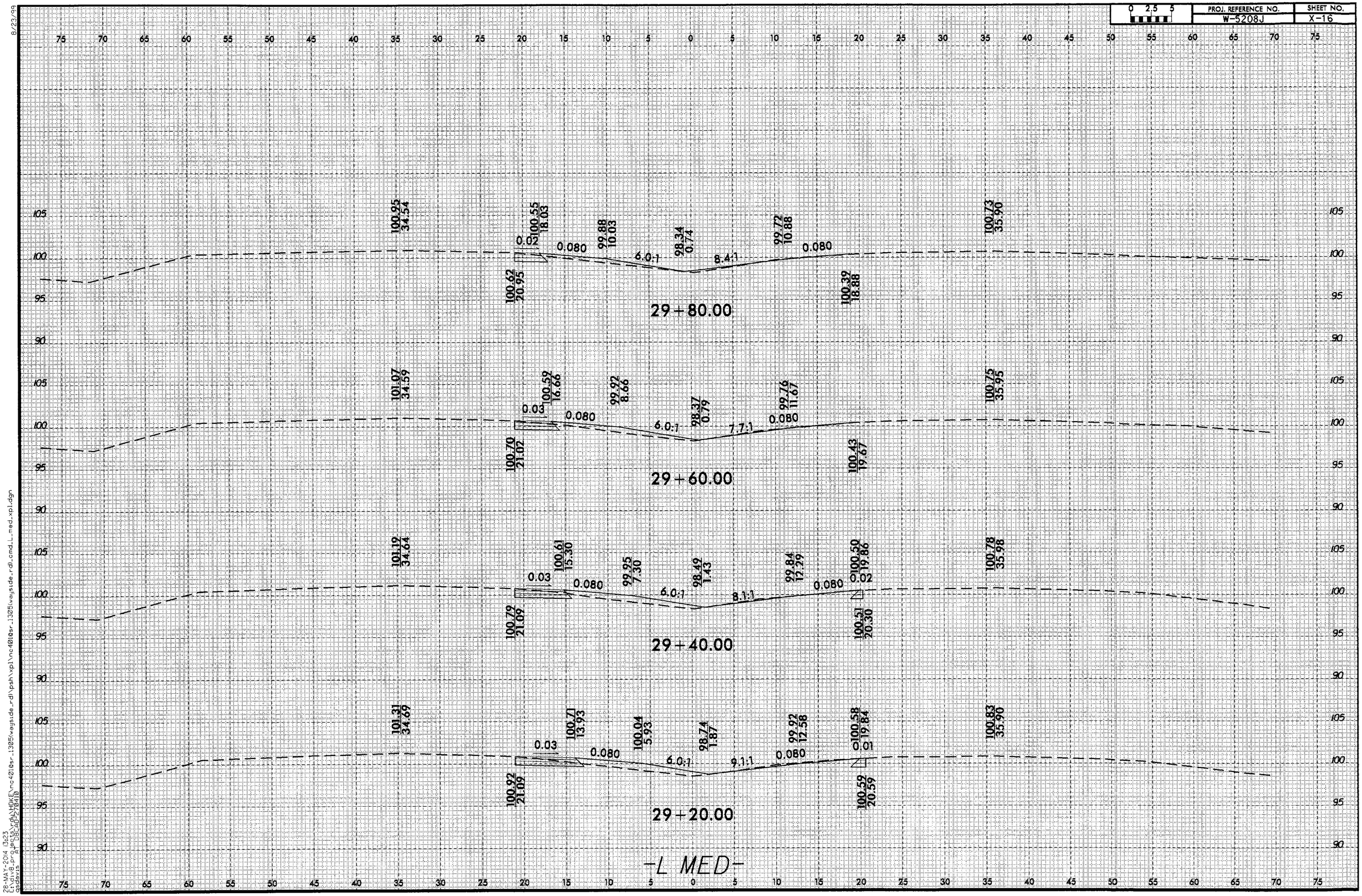

8/23/99

28-MAY-2014 13:23
L:\div8_projects\rdy\NDKF\nc4010sr_1305\wayside_rdl\psh\xpl\nc4010sr_1305\wayside_rdl_cmd_L_med.xpl.dgn
asdavis AT 38CAD-2/70410

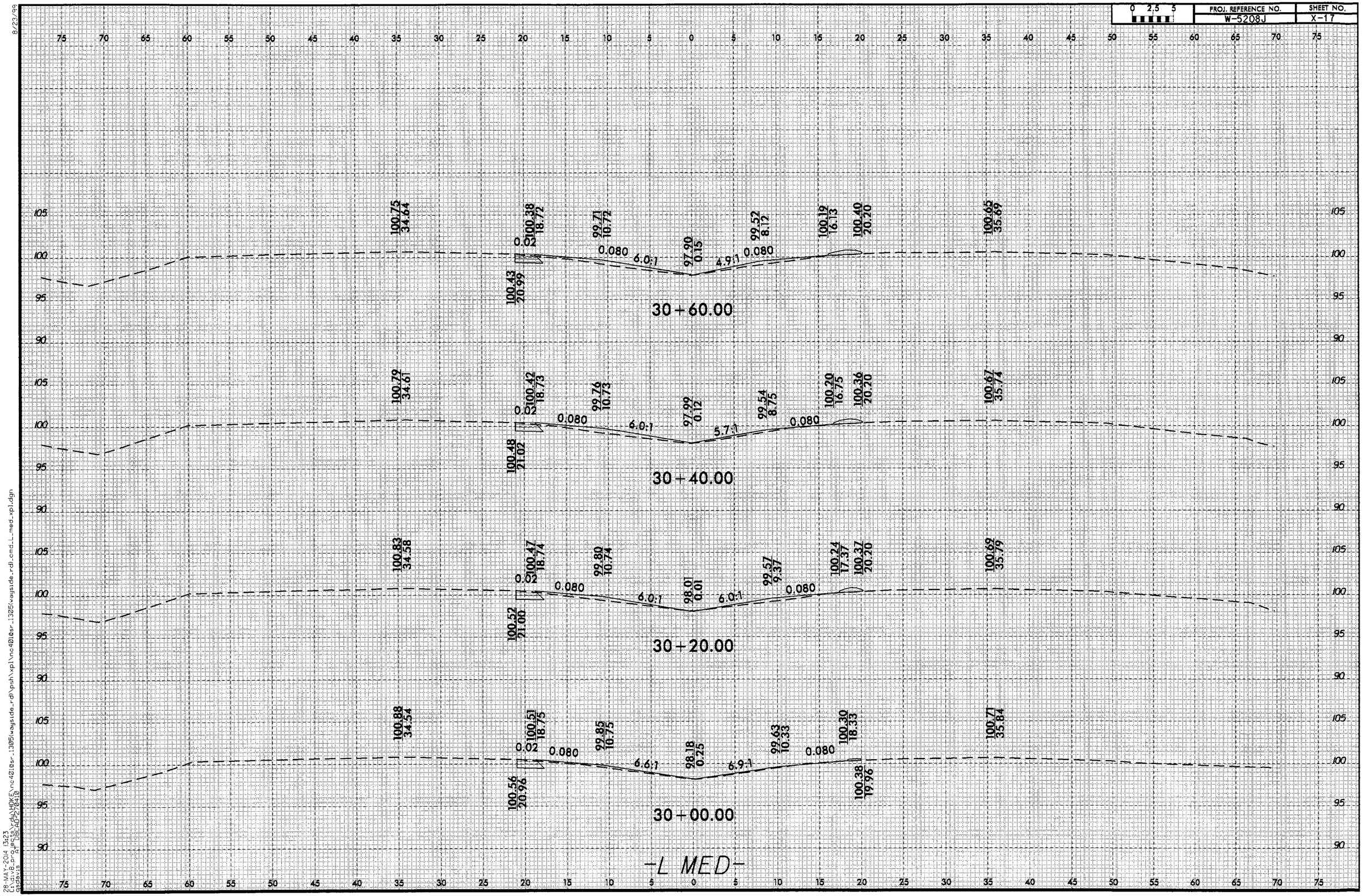

8/23/99

28-MAY-2014 13:23
$$$$dgn

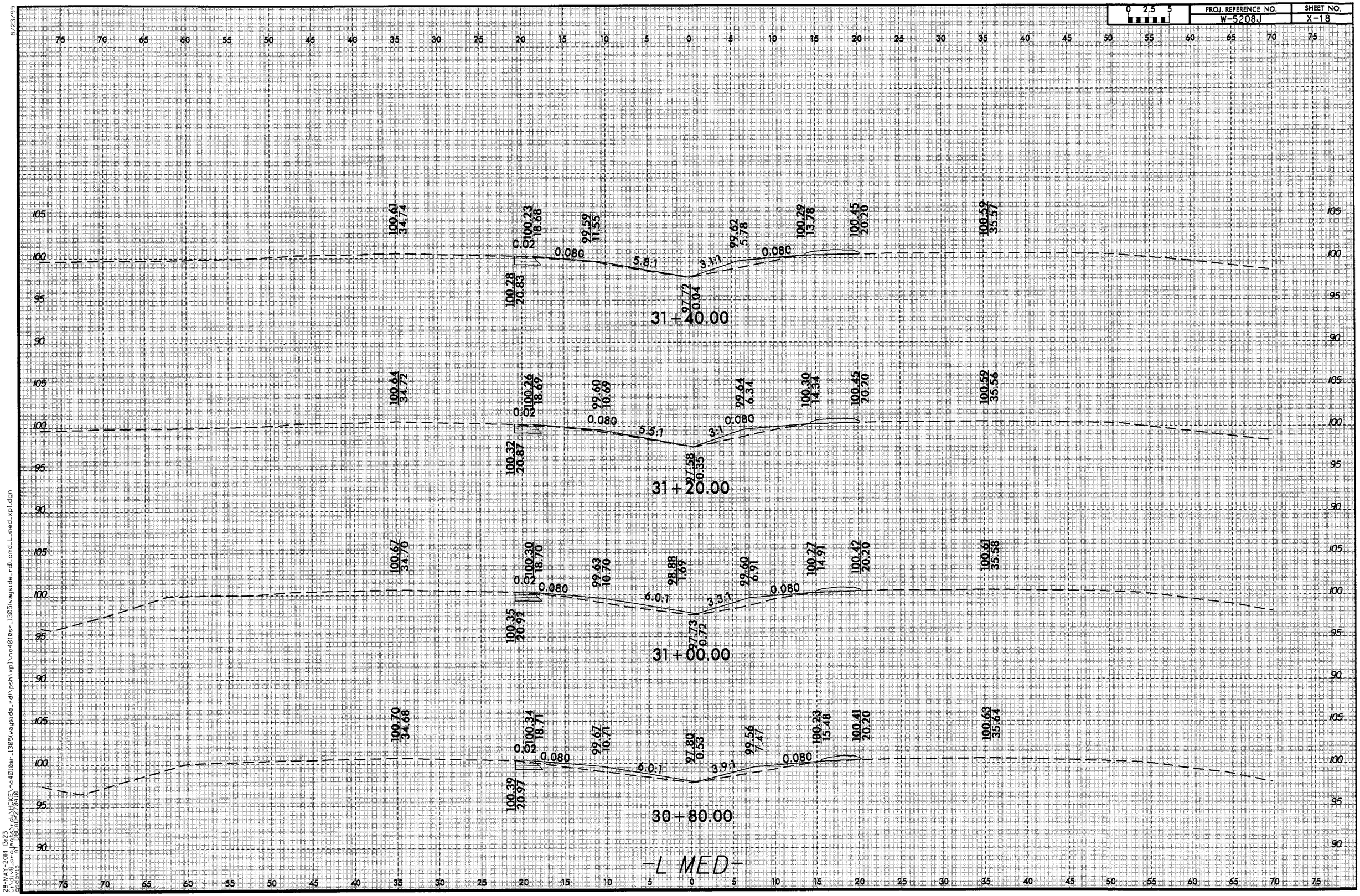

8/23/99
28-MAY-2014 13:23
c:\div8_projects\rdy\HOKE\nc4010sr_1305\wayside_rd\psh\xpl\nc4010sr_1305\wayside_rd\cmd_L_med.xpl.dgn
gadavis AT DOCADD2\70410

0 2.5 5	PROJ. REFERENCE NO.	SHEET NO.
	W-5208J	X-19

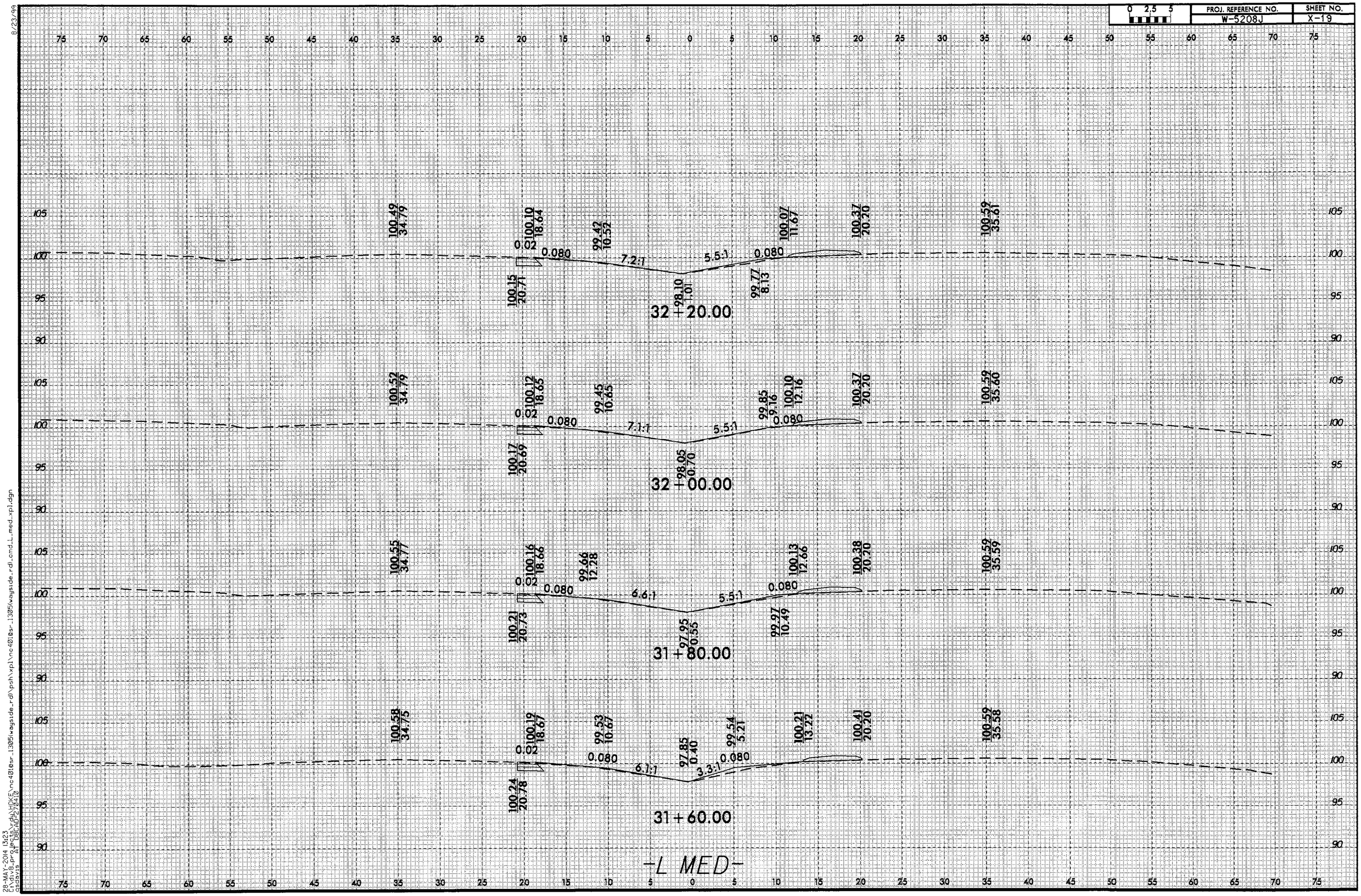

8/23/99

28-MAY-2014 13:23
c:\div8_projects\ndot\HOXE\nc4010sr_1305\wayside_rd\posh\xpl\nc4010sr_1305\wayside_rd_cmd_L_med_xpl.dgn
asdavis AT DBCAD2/2010

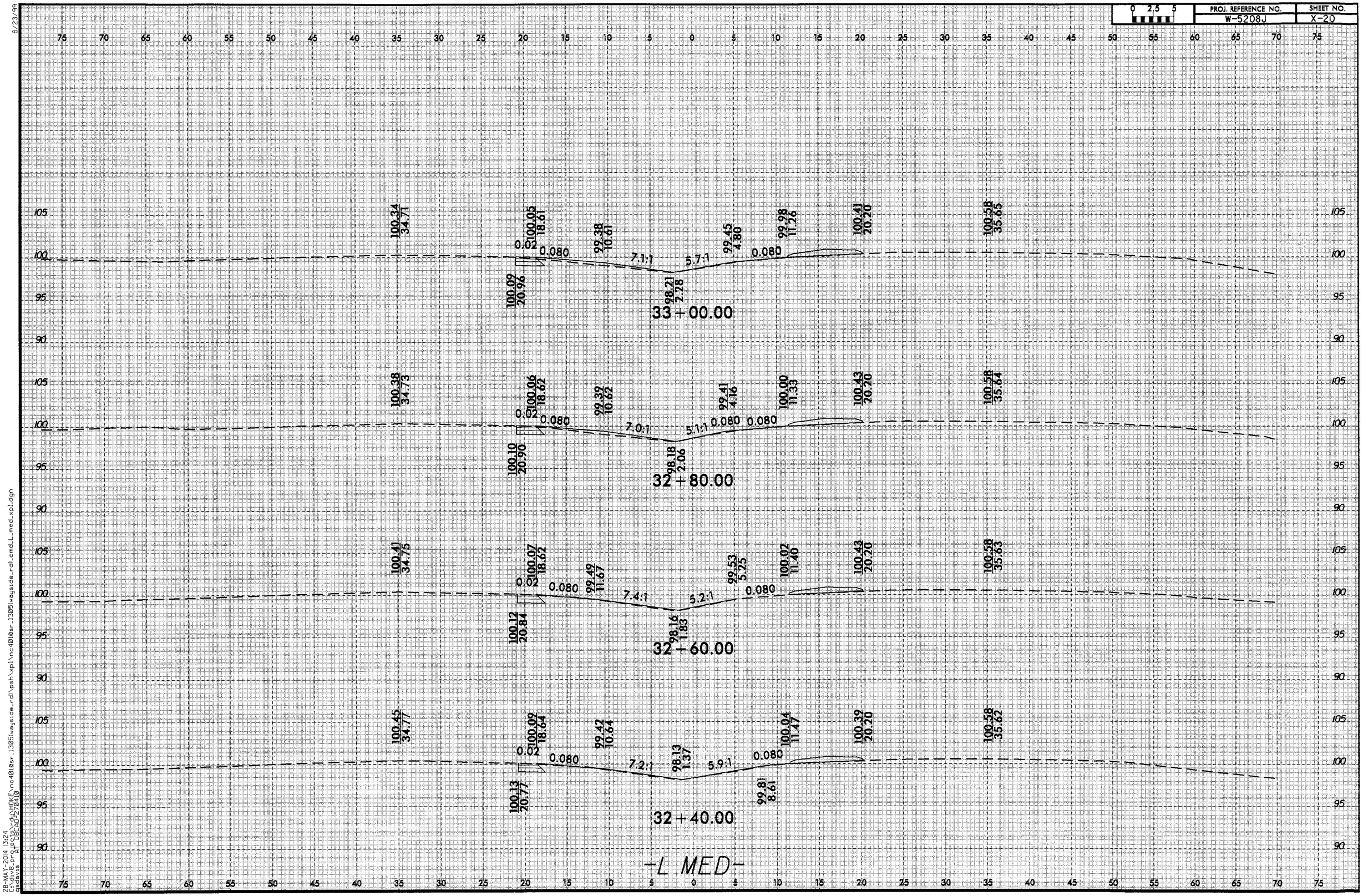

8/23/99
28-MAY-2014 13:24
c:\dgn\prj_wes_dgn\HOKE\nc4010sr_1305\wagside_rd\psh\xpl\nc4010sr_1305\wagside_rd_cmd_L_med_xpl.dgn
Bentley Systems, Inc. V8 XM (08.11.07.443)

0 2.5 5	PROJ. REFERENCE NO.	SHEET NO.
	W-5208J	X-21

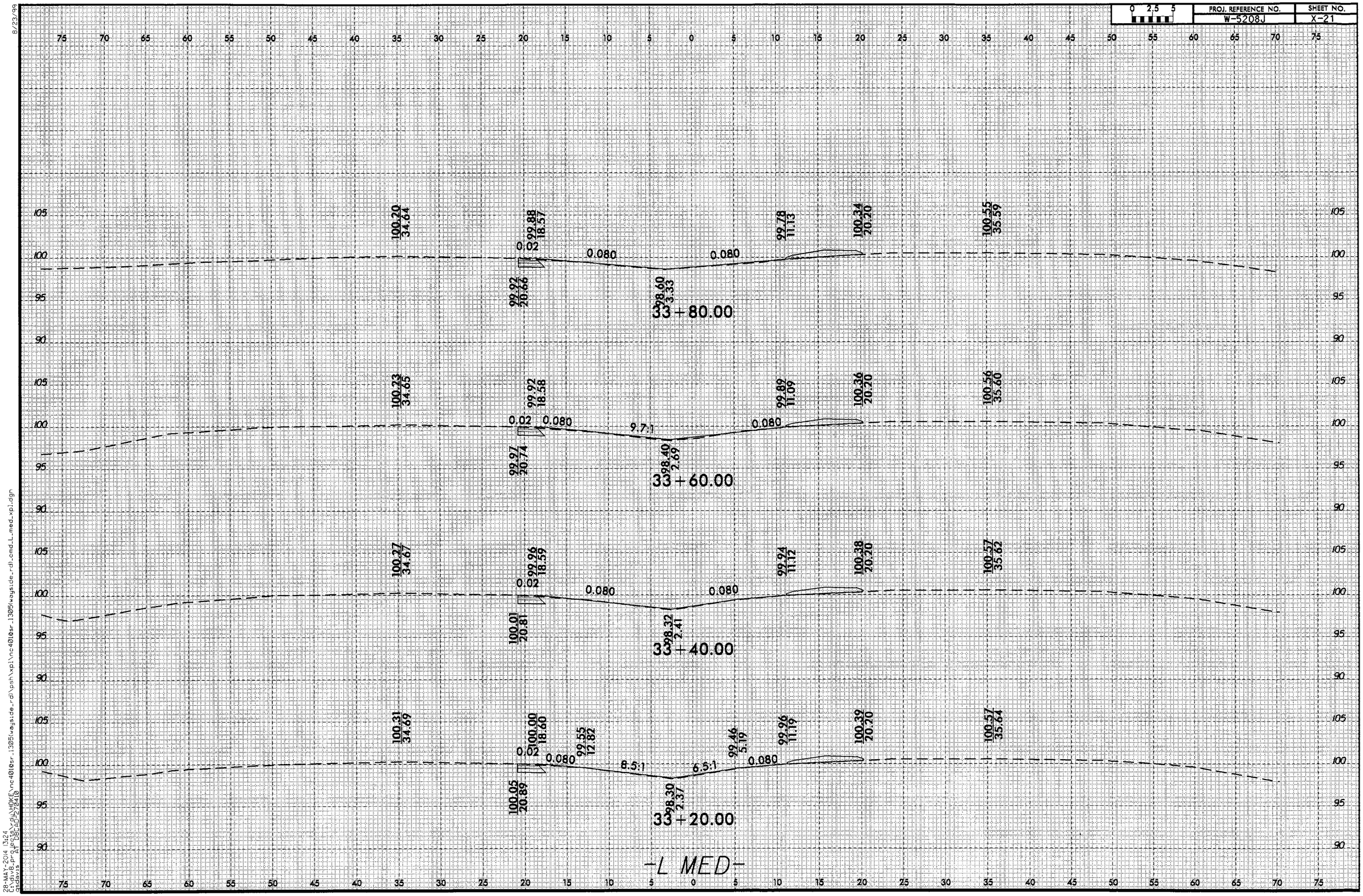

8/23/99

28-MAY-2014 13:24
C:\div8_projects\rdj\NOKE\nc4010sr_1305\wayside_rd\psh\xpl\nc4010sr_1305\wayside_rdl_omd_L_med_xpl.dgn
asdavis
AT 08CAD2/08410

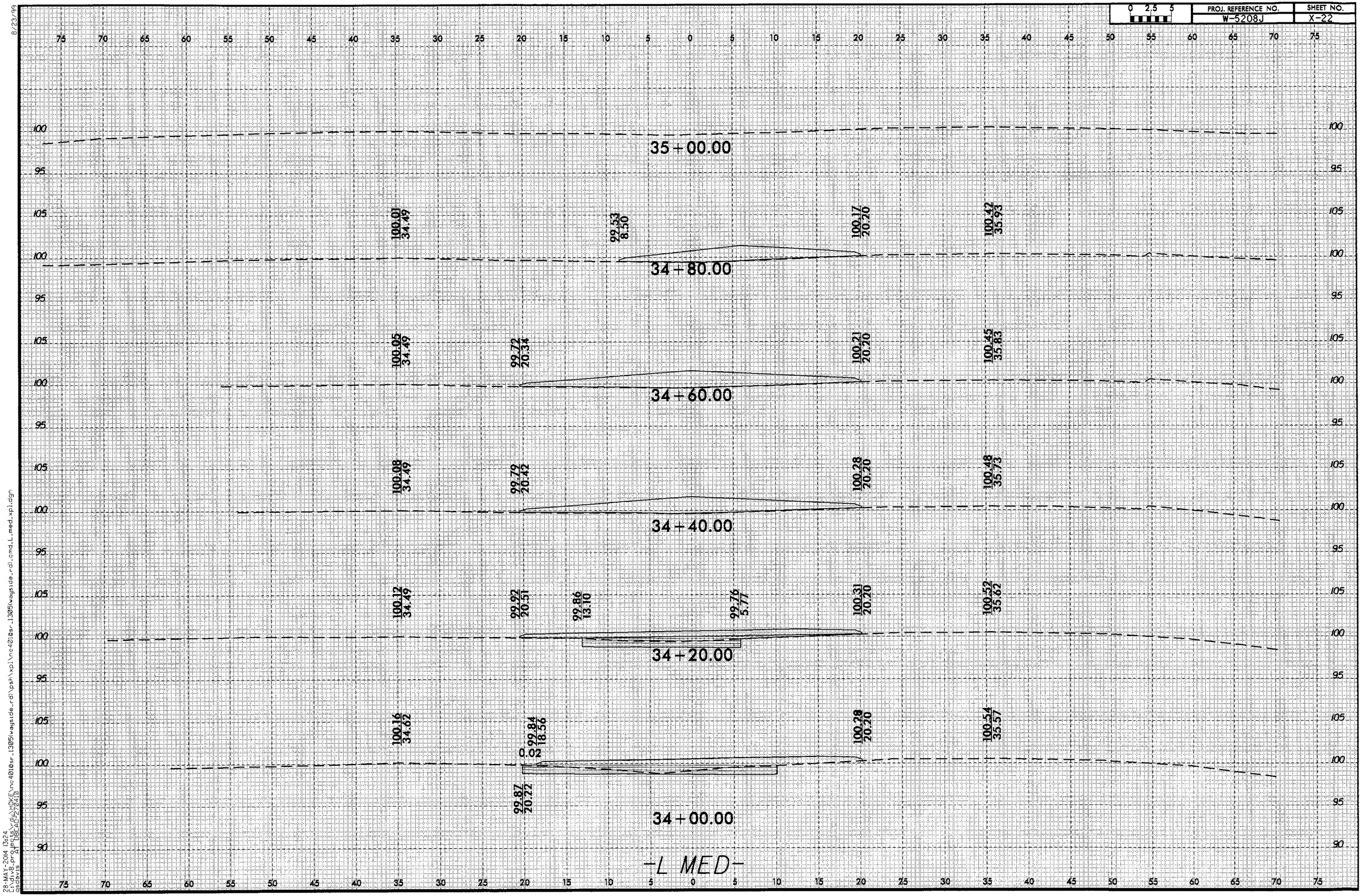

8/23/99
28-MAY-2014 13:24
C:\div8-projects\cd\HDK(5)\nc40l@sr_1305(wayside_rd)\psh\xpl\nc40l@sr_1305(wayside_rd)_emd_L_med.xpl.dgn
cssavs A1 DGCADD 2/20/10

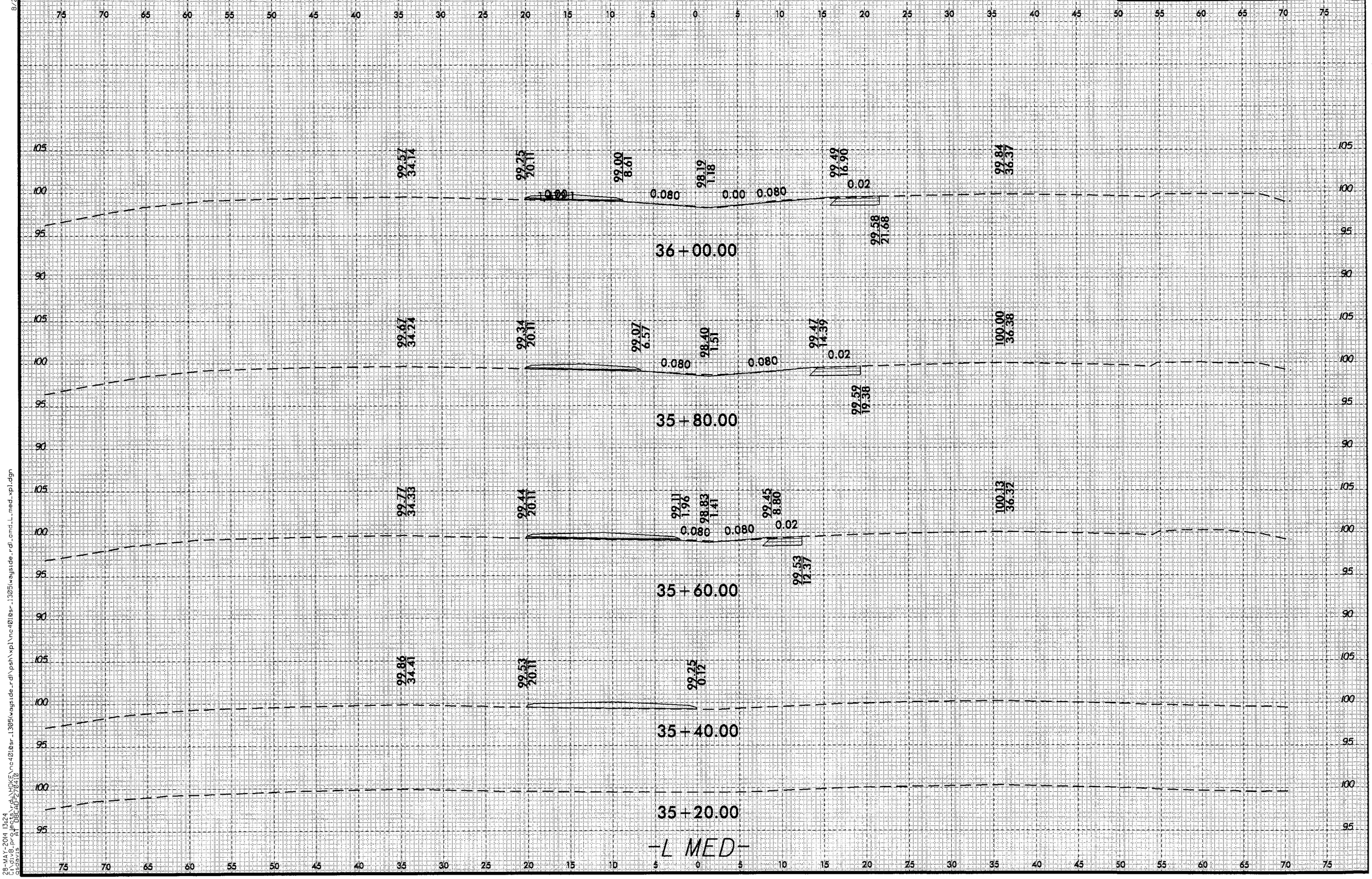

8/23/99

28-MAY-2014 13:24
c:\div8.pr&ec86\wd_v8\WDK(F)\nc4018sr_13085\wayside_rd\psh\xpl\nc4018sr_13085wayside_rd_cmd_L_med_xpl.dgn
$$$$USER$$$$ $$$$DATE$$$$

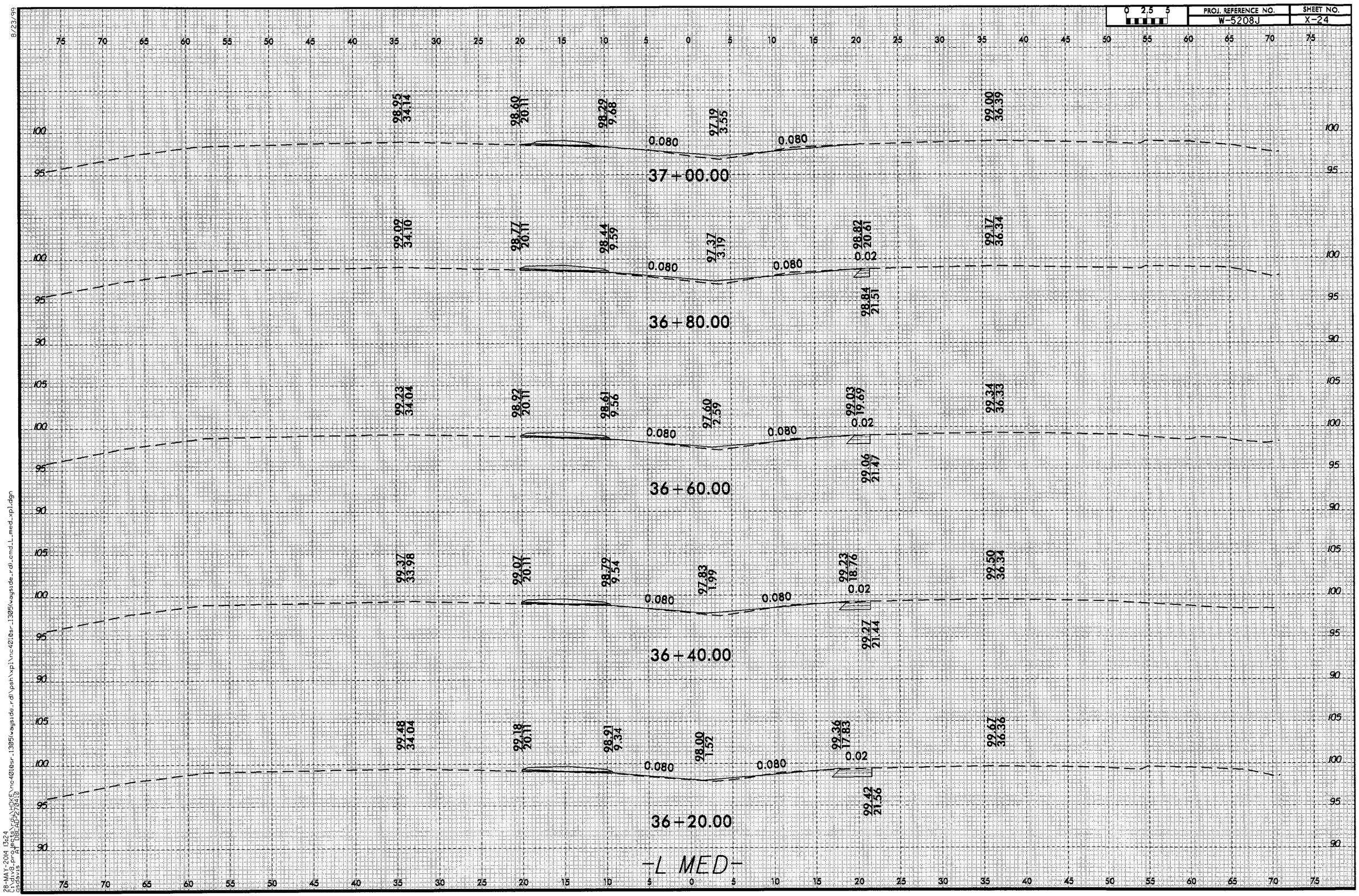

8/23/99

28-MAY-2014 13:24
C:\div8_projects\cdot\DOT\nc4010sr_13051wayside_rdl\psh\xpl\nc4010sr_13051wayside_rdl_cmd_L_med_xpl.dgn
ashays

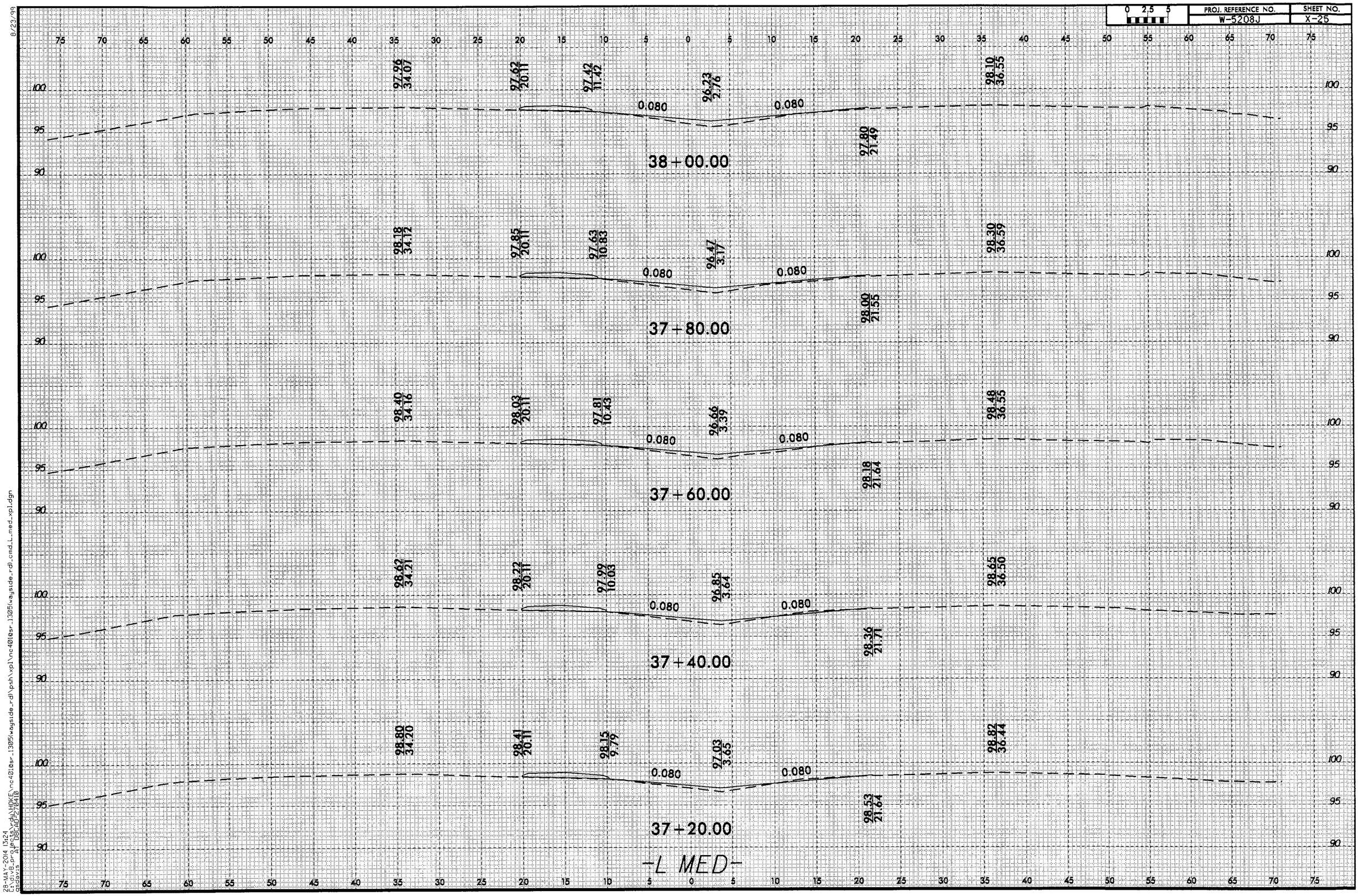

8/23/99
28-MAY-2014 13:24
E:\div8_projects\rdu\HOKE\nc401@sr_1305\wayside_rdl\psh\xpl\nc401@sr_1305\wayside_rdl.cmd_L_med_xpl.dgn
sbdavis AT DBIGAP-Z70410

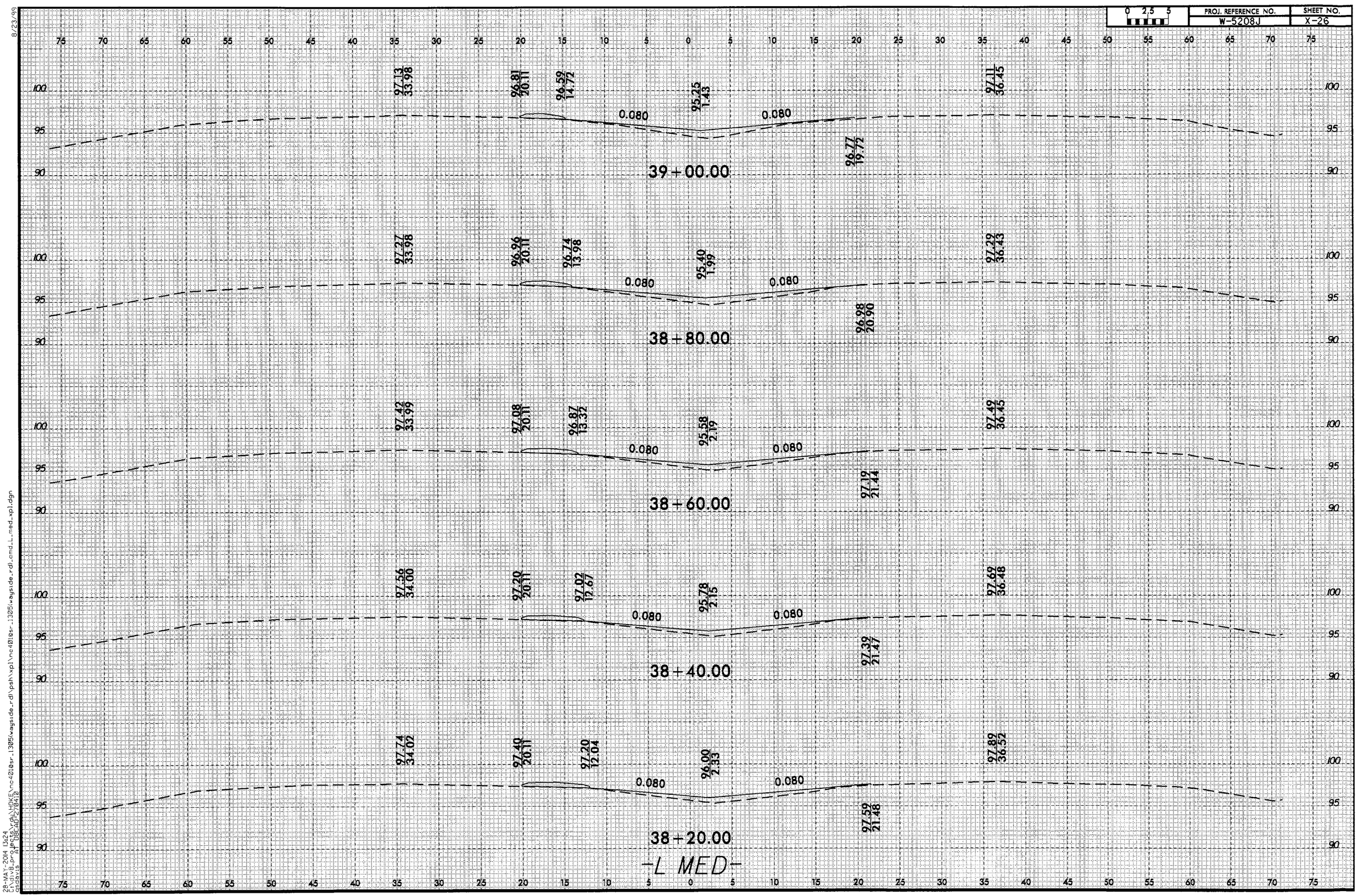
0 2.5 5
PROJ. REFERENCE NO.
W-5208J
SHEET NO.
X-26
39+00.00
97.13
33.98
96.81
20.11
96.59
14.72
95.25
1.43
0.080
0.080
96.77
19.72
97.11
36.45
38+80.00
97.27
33.98
96.96
20.11
96.74
13.98
95.40
1.99
0.080
0.080
96.98
20.90
97.29
36.43
38+60.00
97.42
33.99
97.08
20.11
96.87
13.32
95.58
2.19
0.080
0.080
97.19
21.44
97.49
36.45
38+40.00
97.56
34.00
97.20
20.11
97.02
12.67
95.78
2.15
0.080
0.080
97.39
21.47
97.69
36.48
38+20.00
97.74
34.02
97.40
20.11
97.20
12.04
96.00
2.33
0.080
0.080
97.59
21.48
97.89
36.52
-L MED-
8/23/99
28-MAY-2014 13:24
L:\div8_projects\rdu\WRDOT\nc401@sr_1305\wayside_rd\psh\xpl\nc401@sr_1305\wayside_rd\cmd_L_med_xpl.dgn
cesavis
A1 08:40:27 PM

0 2.5 5	PROJ. REFERENCE NO.	SHEET NO.
	W-5208J	X-27

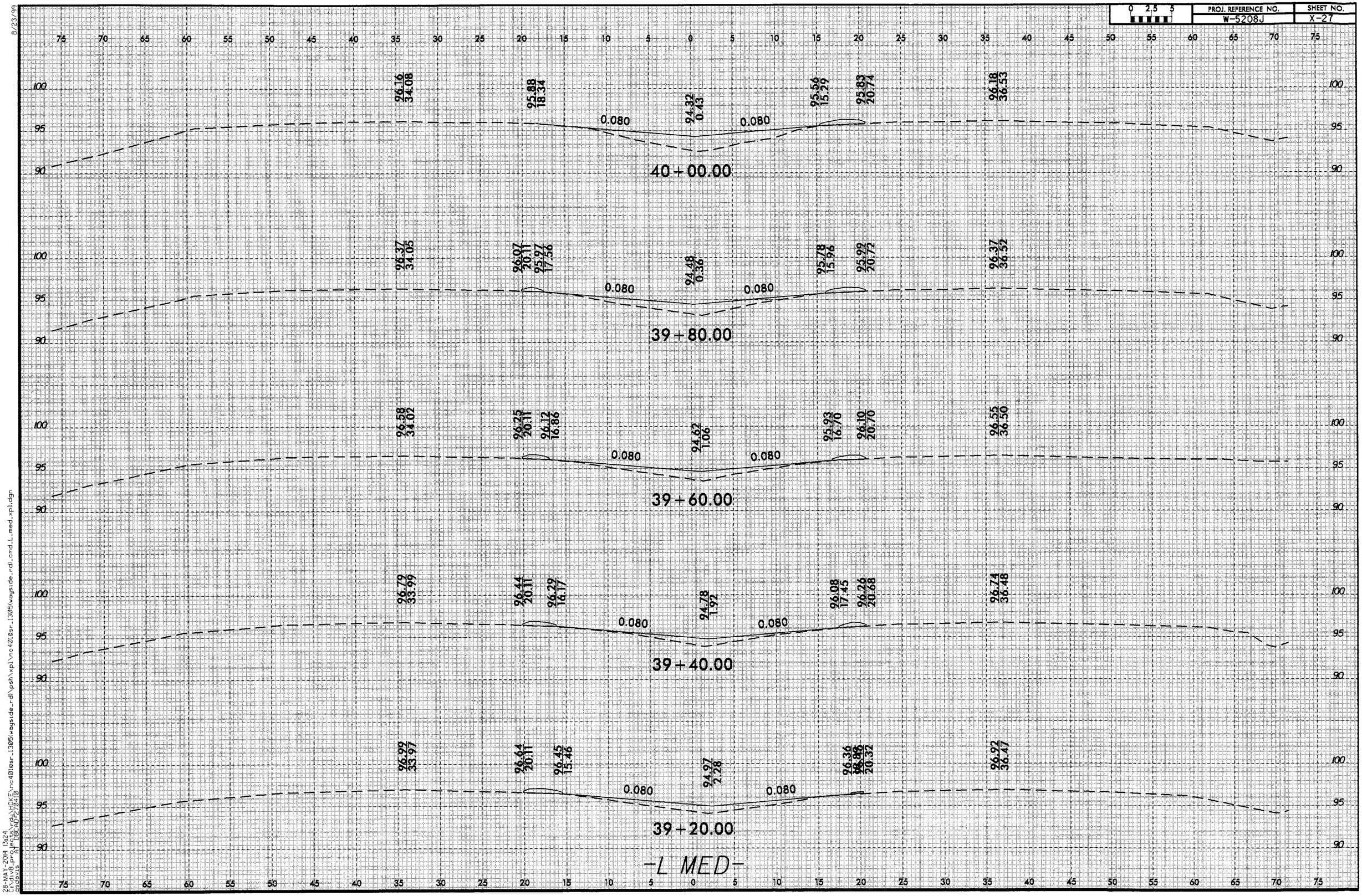

8/23/99

28-MAY-2014 13:24
C:\div8_projects\rdu\HOKE\nc4010sr_1305\wayside_rd\psh\xpl\nc4010sr_1305\wayside_rd_cmd_L_med_xpl.dgn
asbavis AT 1080 AD 2/20x10

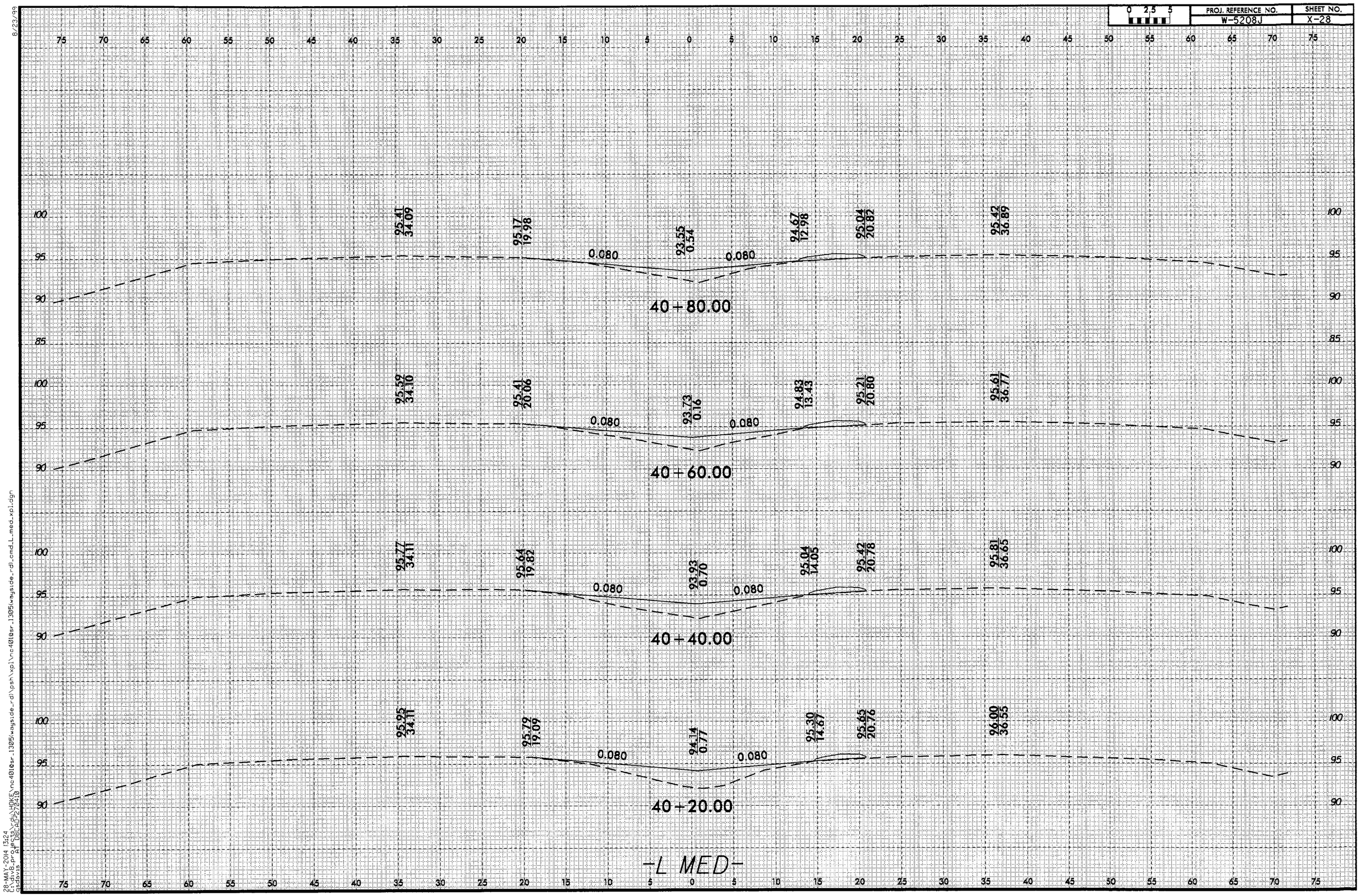

8/23/99

28-MAY-2014 13:24
c:\dlvb_prj\esl_gj\HDX(E)\nc4010sr_1305\wayside_rd\psh\xpl\nc4010sr_1305\wayside_rd_cmd_L_med_xpl.dgn
Conveyance
A 1:50 - AD 22/04/10

PROJ. REFERENCE NO.	SHEET NO.
W-5208J	X-29

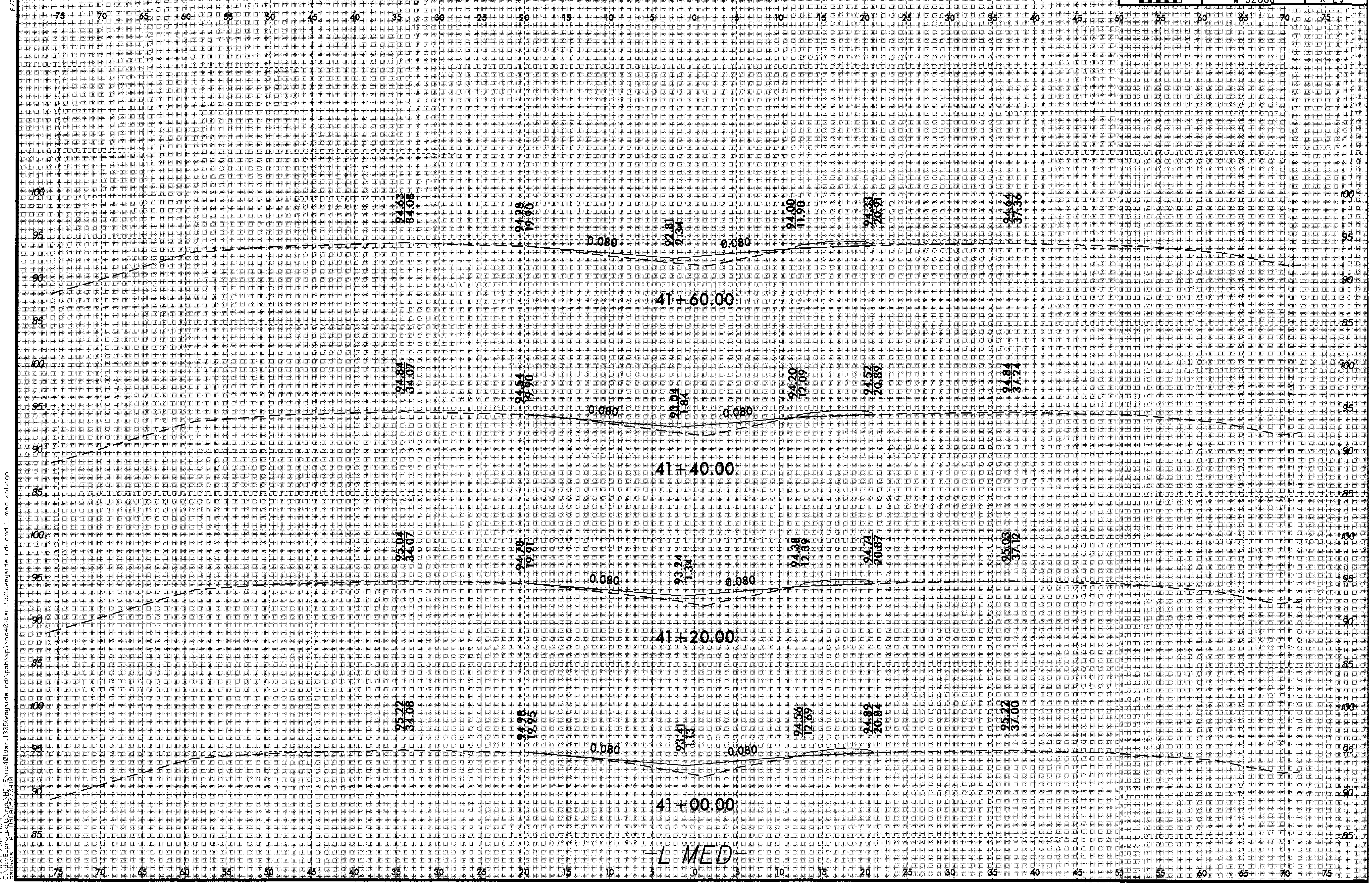

8/23/99

28-MAY-2014 13:24
C:\div8_projects\rdL\HOKE\nc401@sr_1305(wayside_rd)\psh\xpl\nc401@sr_1305(wayside_rd)_cmd_L_med_xpl.dgn
asdavis AT D8CAD-270410

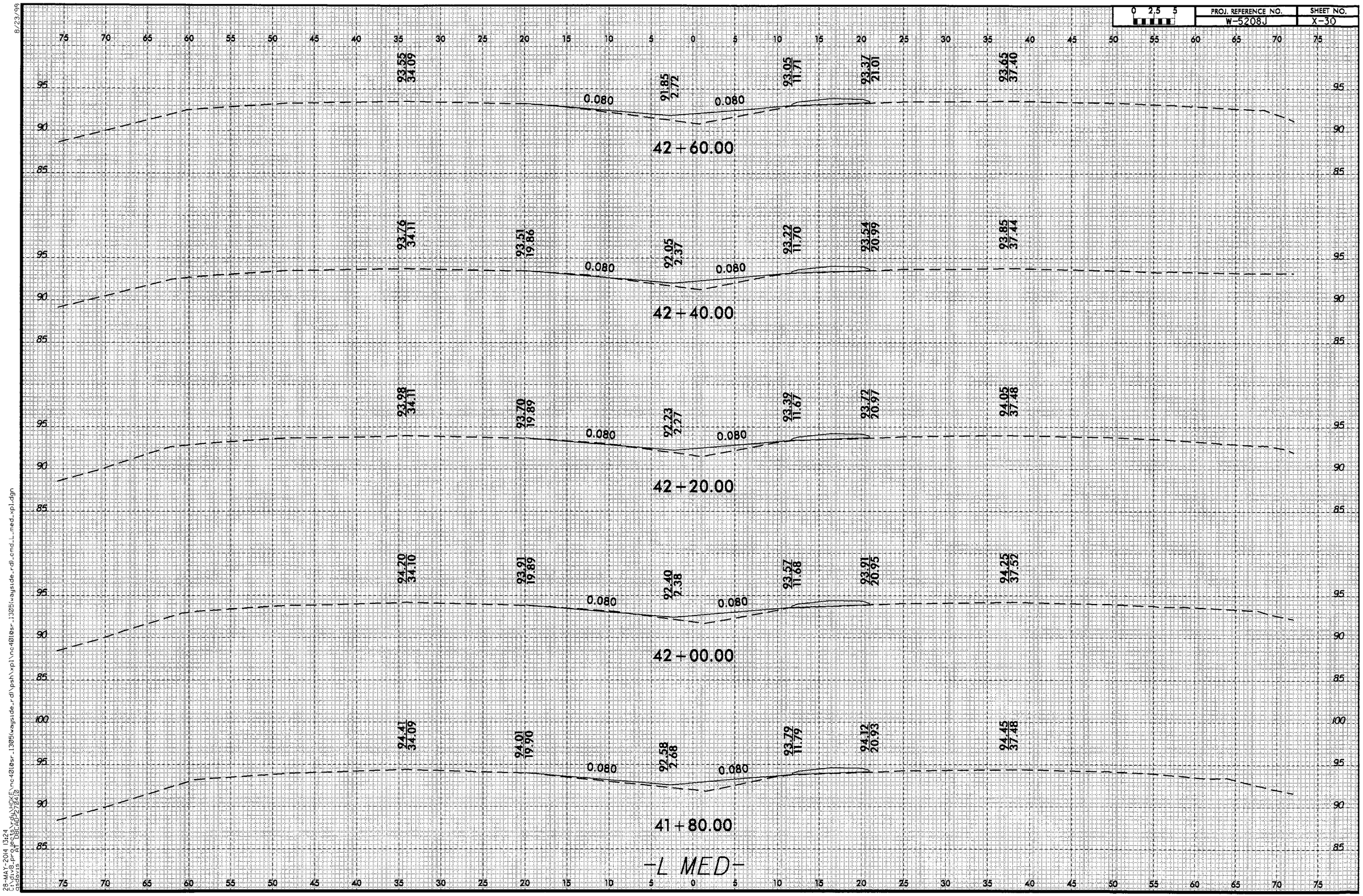
0 2.5 5
PROJ. REFERENCE NO.
W-5208J
SHEET NO.
X-30
42+60.00
93.55 34.09
91.85 2.72
93.05 11.71
93.37 21.01
93.65 37.40
0.080
0.080
42+40.00
93.76 34.11
93.51 19.86
92.05 2.37
93.22 11.70
93.54 20.99
93.85 37.44
0.080
0.080
42+20.00
93.98 34.11
93.70 19.89
92.23 2.27
93.39 11.67
93.72 20.97
94.05 37.48
0.080
0.080
42+00.00
94.20 34.10
93.91 19.89
92.40 2.38
93.57 11.68
93.91 20.95
94.25 37.52
0.080
0.080
41+80.00
94.41 34.09
94.01 19.90
92.58 2.68
93.79 11.79
94.12 20.93
94.45 37.48
0.080
0.080
-L MED-
8/23/99
28-MAY-2014 13:24
C:\ivh8_projects\HDX(E)\nc4010sr_13051\wayside_rd\psh\xpl\nc4010sr_13051\wayside_rd\cmd_L_med.xpl.dgn

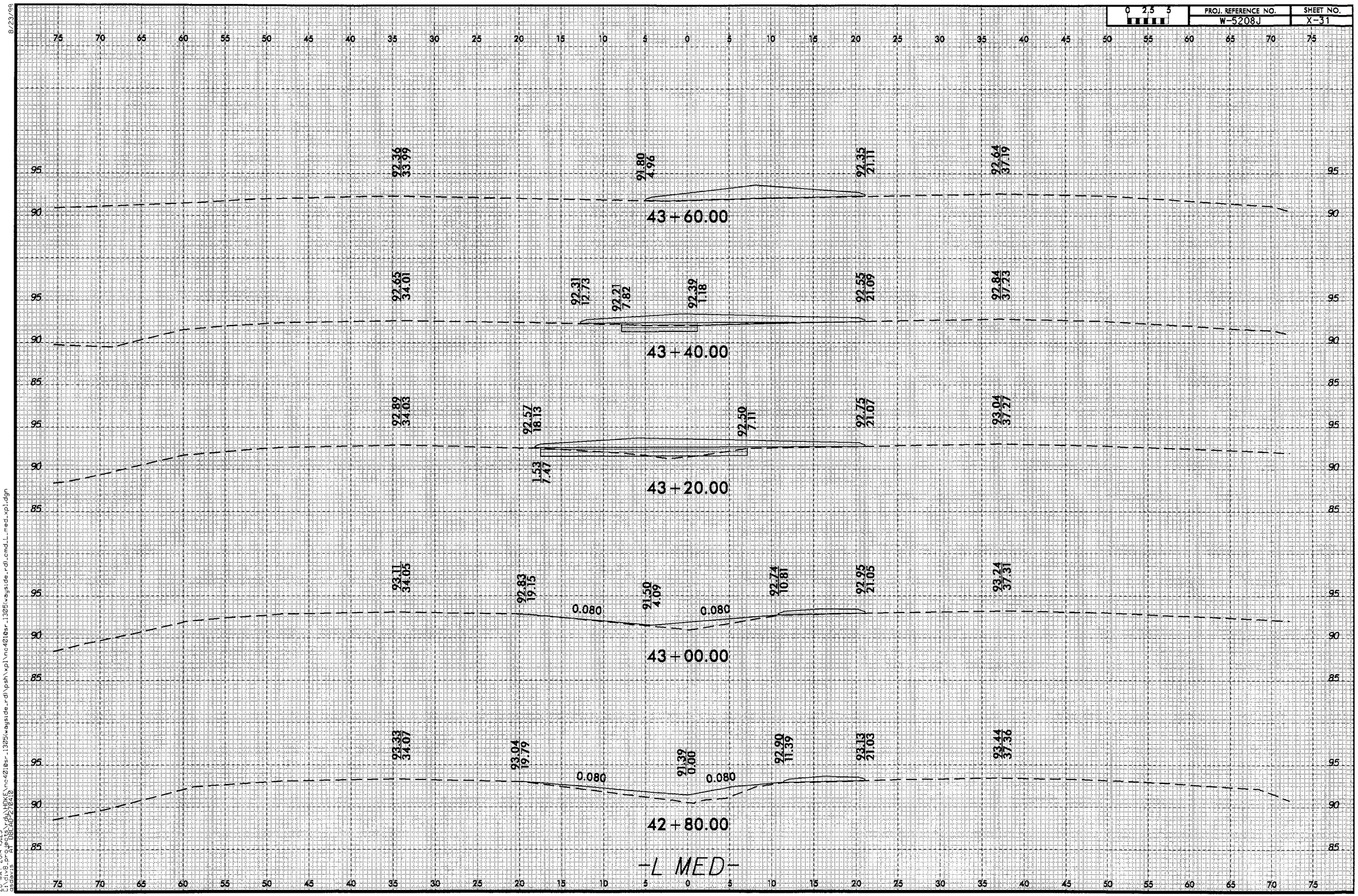
0 2.5 5
PROJ. REFERENCE NO.
W-5208J
SHEET NO.
X-31
43+60.00
92.36 33.99
91.80 4.96
92.35 21.11
92.64 37.19
43+40.00
92.65 34.01
92.31 12.73
92.21 7.82
92.39 1.18
92.55 21.09
92.84 37.23
43+20.00
92.89 34.03
92.57 18.13
1.53 7.47
92.50 7.11
92.75 21.07
93.04 37.27
43+00.00
93.11 34.05
92.83 19.15
0.080
91.50 4.09
0.080
92.74 10.81
92.95 21.05
93.24 37.31
42+80.00
93.33 34.07
93.04 19.79
0.080
91.39 0.00
0.080
92.90 11.39
93.13 21.03
93.44 37.36
-L MED-
8/23/99
28-MAY-2014 13:25
c:\dgn\pw_pw08\ADOT\wdk\nc40108sr_13035\wayside_rd\psh\xpl\nc40108sr_13035\wayside_rd\cmd_L_med_xpl.dgn
cadmin
$$$$USER$$$$

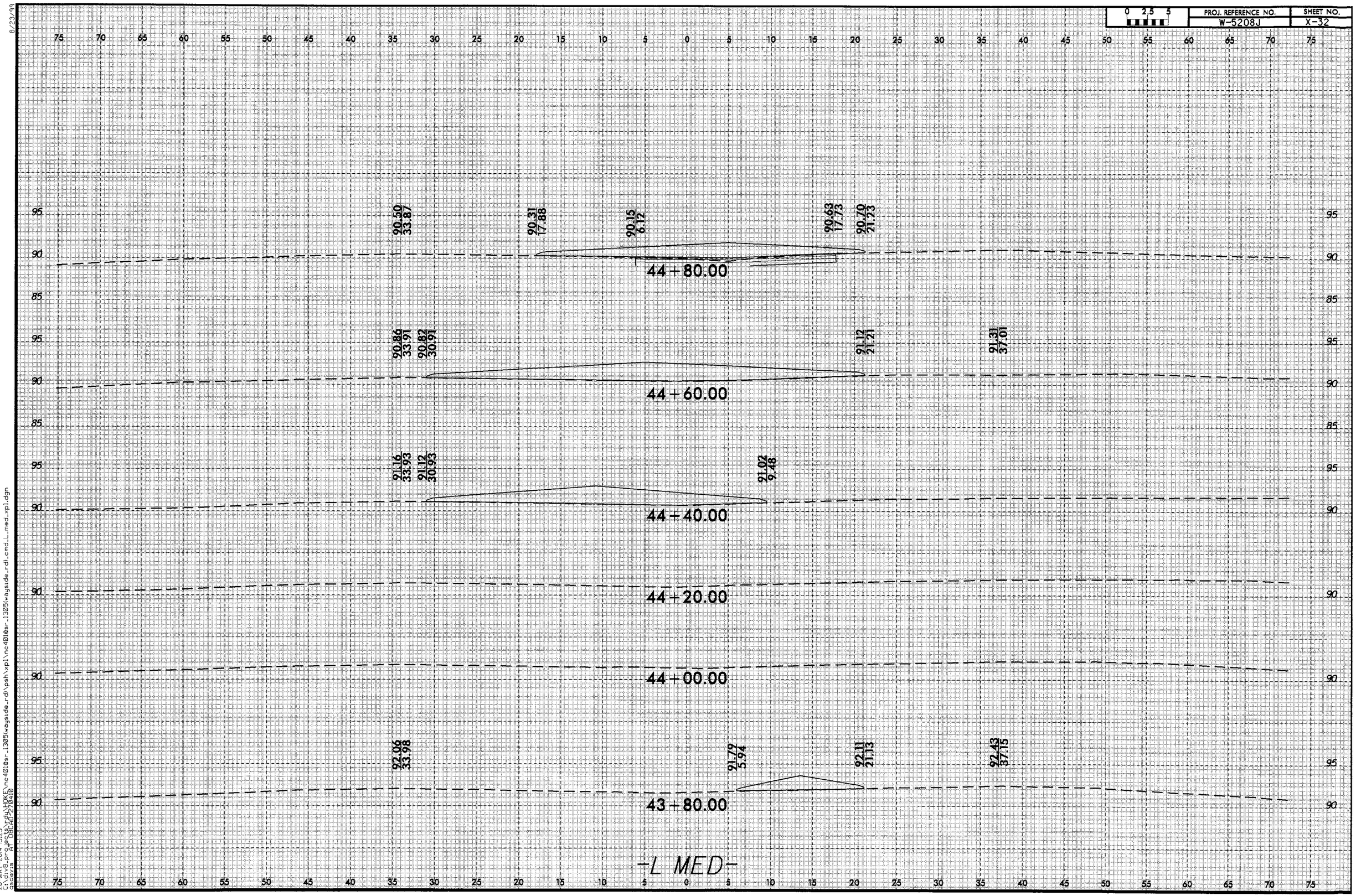

8/23/99

28-MAY-2014 13:25
C:\pwworking\ydot\HOKEN\nc4018sr_1305\wayside_rd\psh\xpl\nc4018sr_1305\wayside_rd_cmd_L_med_xpl.dgn
$$ $$
$$ $$
$$ $$

0 2.5 5	PROJ. REFERENCE NO.	SHEET NO.
	W-5208J	X-33

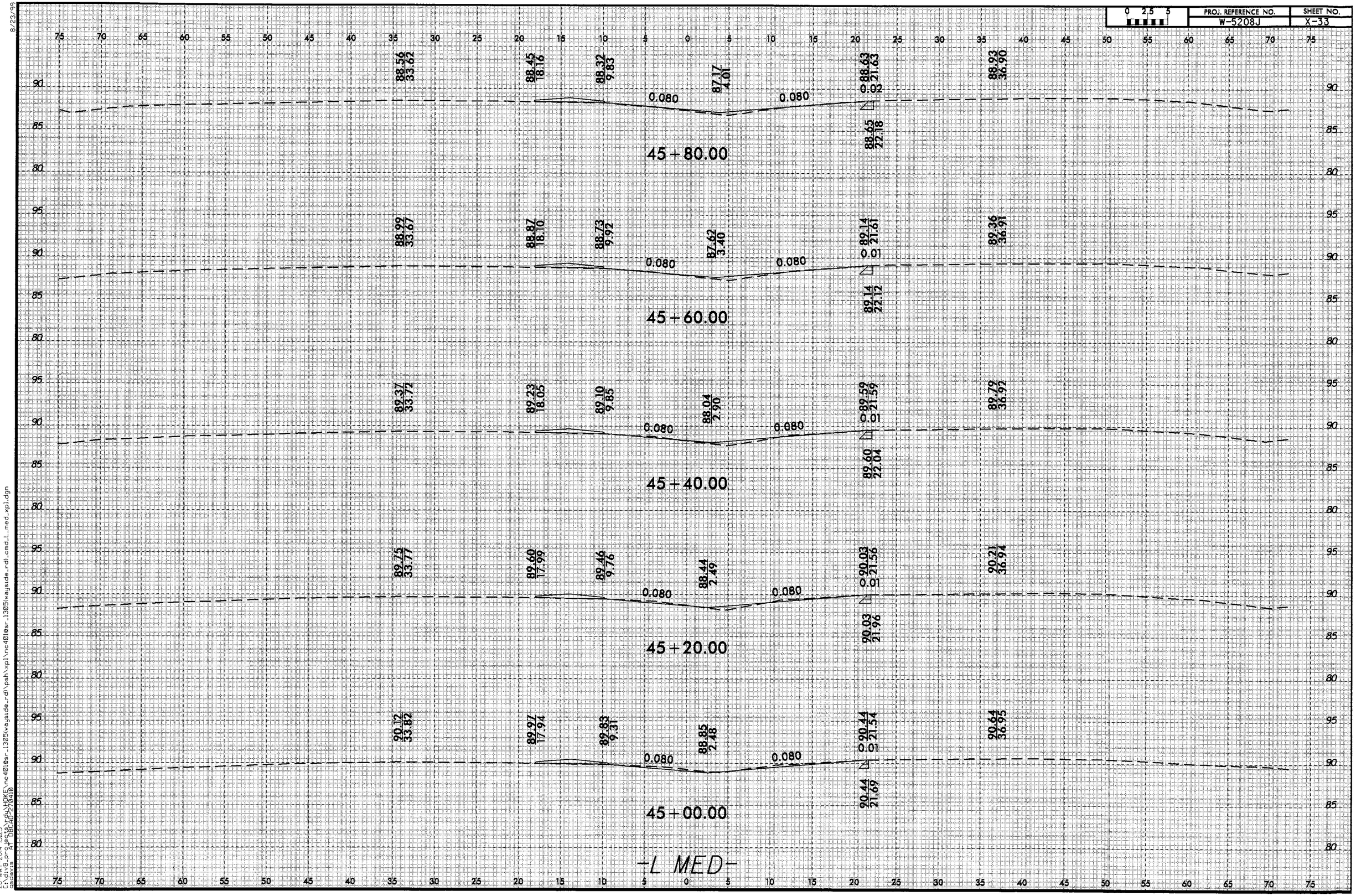

8/23/99

28-MAY-2014 13:25
c:\pwworking\HDOK\nc4018sr_1305\wayside_rd\psh\xpl\nc4018sr_1305\wayside_rd\cmd_l_med_xpl.dgn
$_USER
$_DGNDATE=270410

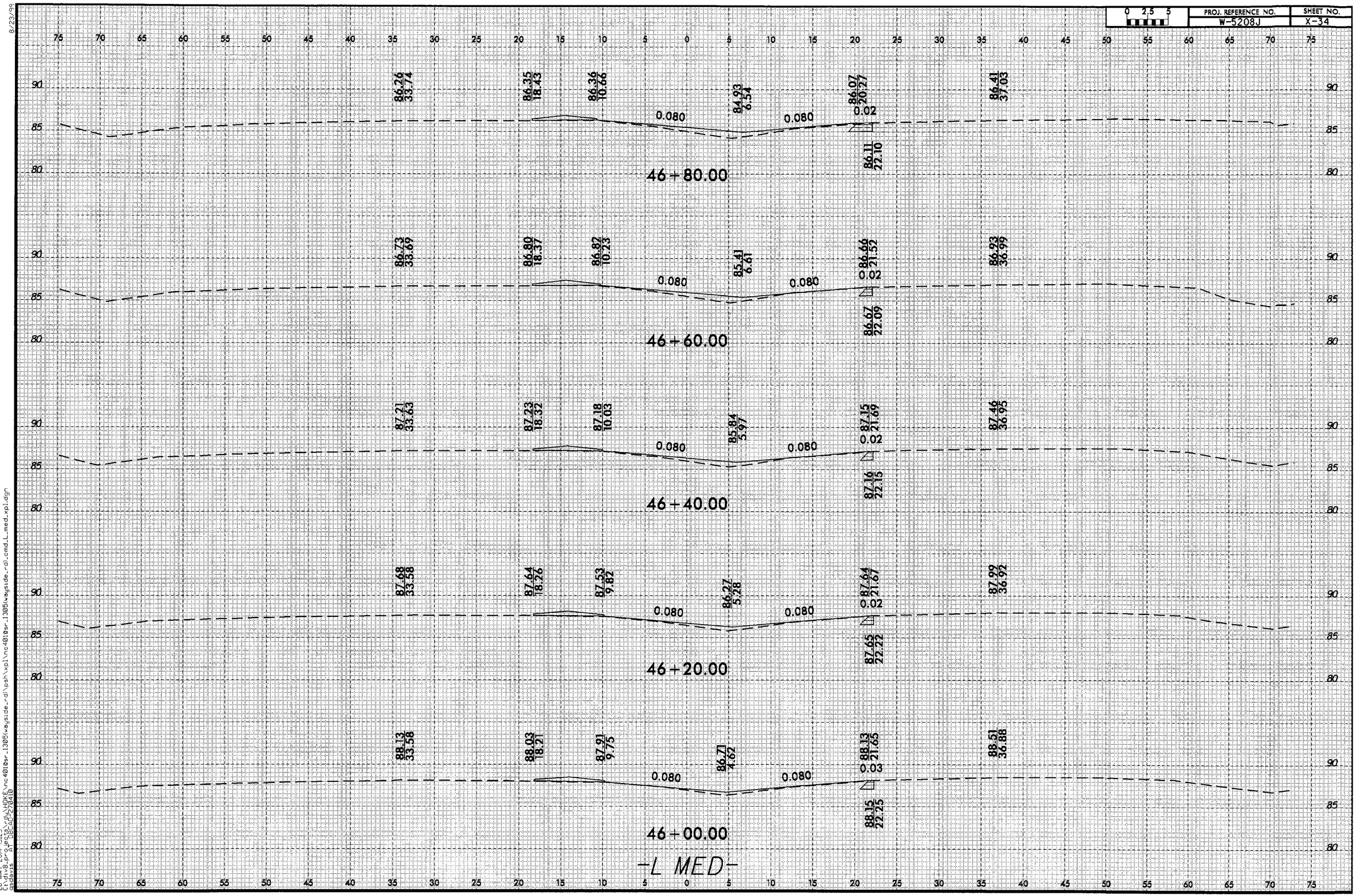

8/23/99

28-MAY-2014 13:25
C:\Users\DOHOKE\AppData\Local\Bentley\Microsoft\Cache\
Caroline
W-5208_P9_LeBlanc_Cd_Cd_HOKE\nc401@sr_1305\wayside_rdl\psh\xpl\nc401@sr_1305\wayside_rdl_cmd_L_med_xpl.dgn

PROJ. REFERENCE NO.	SHEET NO.
W-5208J	X-35

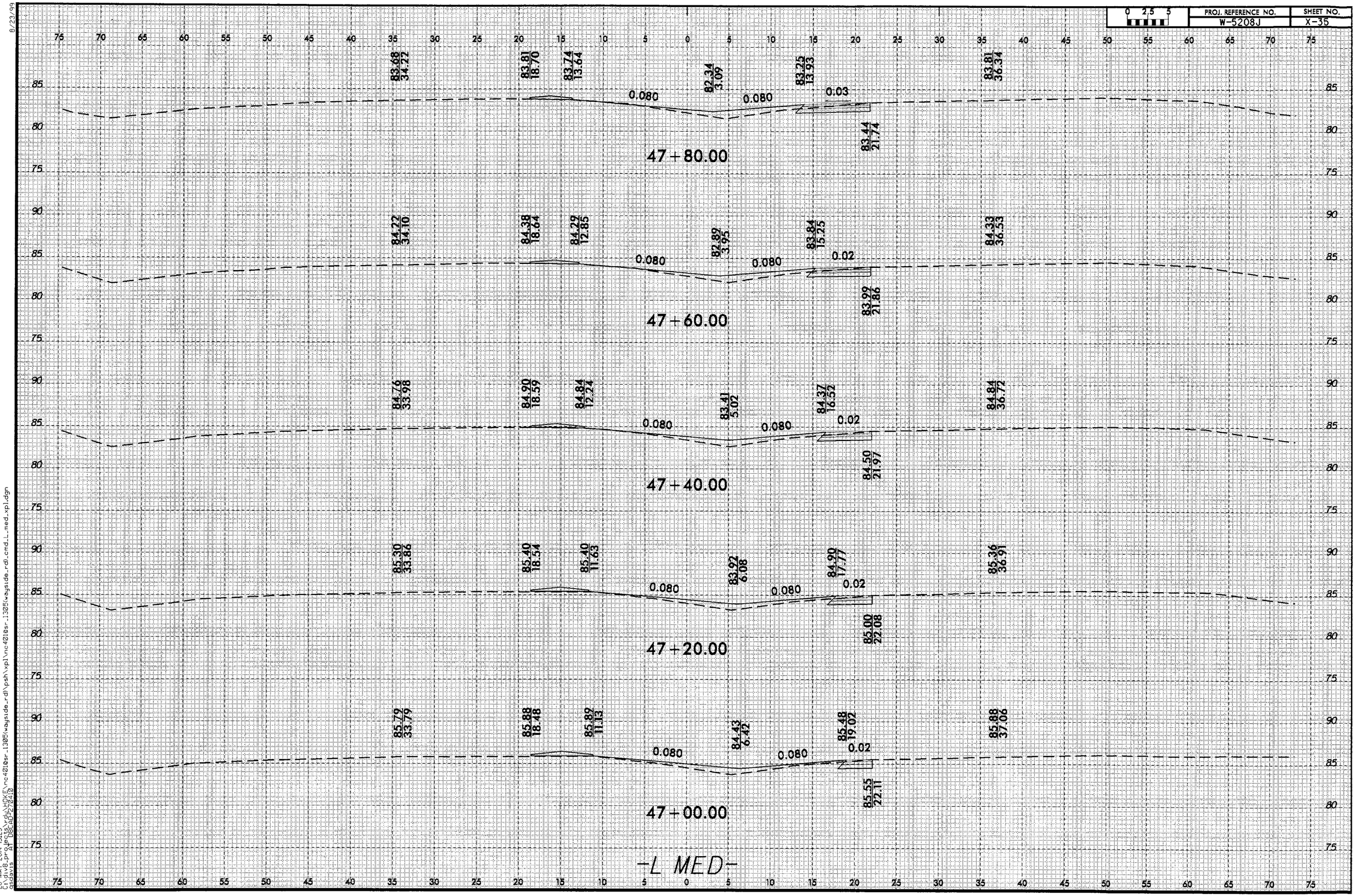

8/23/99

28-MAY-2014 13:25
\\fileserv\projects\HOKE\rc4018sr_1305\wayside_rd\psh\xpl\rc4018sr_1305(wayside_rd).cmd_L_med_xpl.dgn
cadavis
PLOT SCALE: 1" = 10.00'

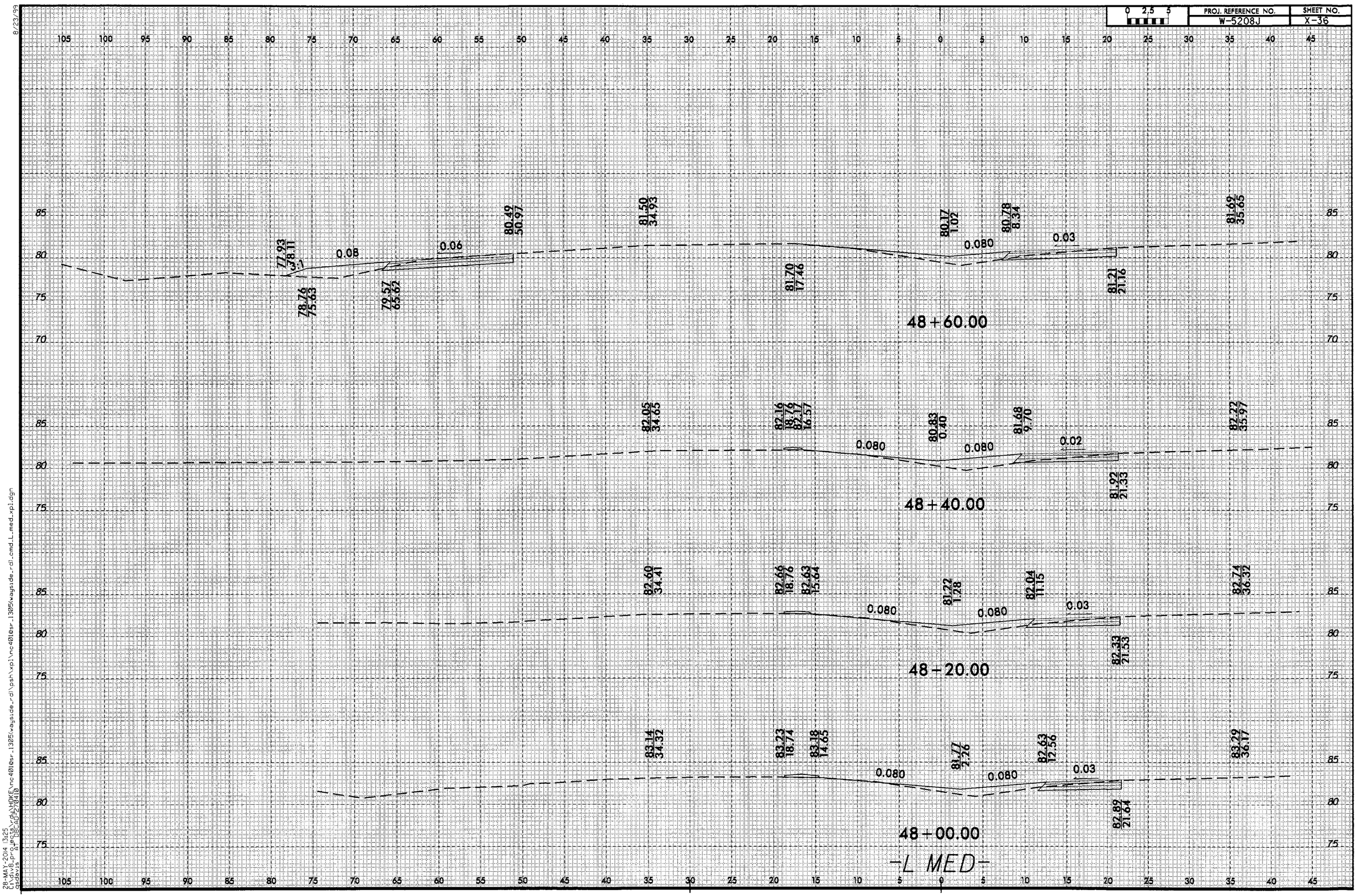
PROJ. REFERENCE NO.
W-5208J
SHEET NO.
X-36
0 2.5 5
48+60.00
77.93
38.11
0.08
0.06
80.49
50.97
81.50
34.93
81.70
17.46
79.57
65.62
78.76
75.63
80.17
1.02
0.080
80.78
8.34
0.03
81.21
21.16
81.69
35.65
48+40.00
82.05
34.65
82.16
18.76
82.17
16.57
0.080
80.83
0.40
0.080
81.68
9.70
0.02
81.92
21.33
82.22
35.97
48+20.00
82.60
34.41
82.66
18.76
82.63
15.64
0.080
81.22
1.28
0.080
82.04
11.15
0.03
82.33
21.53
82.74
36.32
48+00.00
83.14
34.32
83.23
18.74
83.18
14.65
0.080
81.77
2.26
0.080
82.63
12.56
0.03
82.89
21.64
83.29
36.17
-L MED-
105 100 95 90 85 80 75 70 65 60 55 50 45 40 35 30 25 20 15 10 5 0 5 10 15 20 25 30 35 40 45
85 80 75 70
8/23/99
28-MAY-2014 13:25
C:\Civil8-projects\HOWE\nc401esr.1305\wagside_rd\psh\xpl\nc401esr.1305\wagside_rd\cmd_L_med.xpl.dgn
Geopak 4.1.0.0 (32-bit)

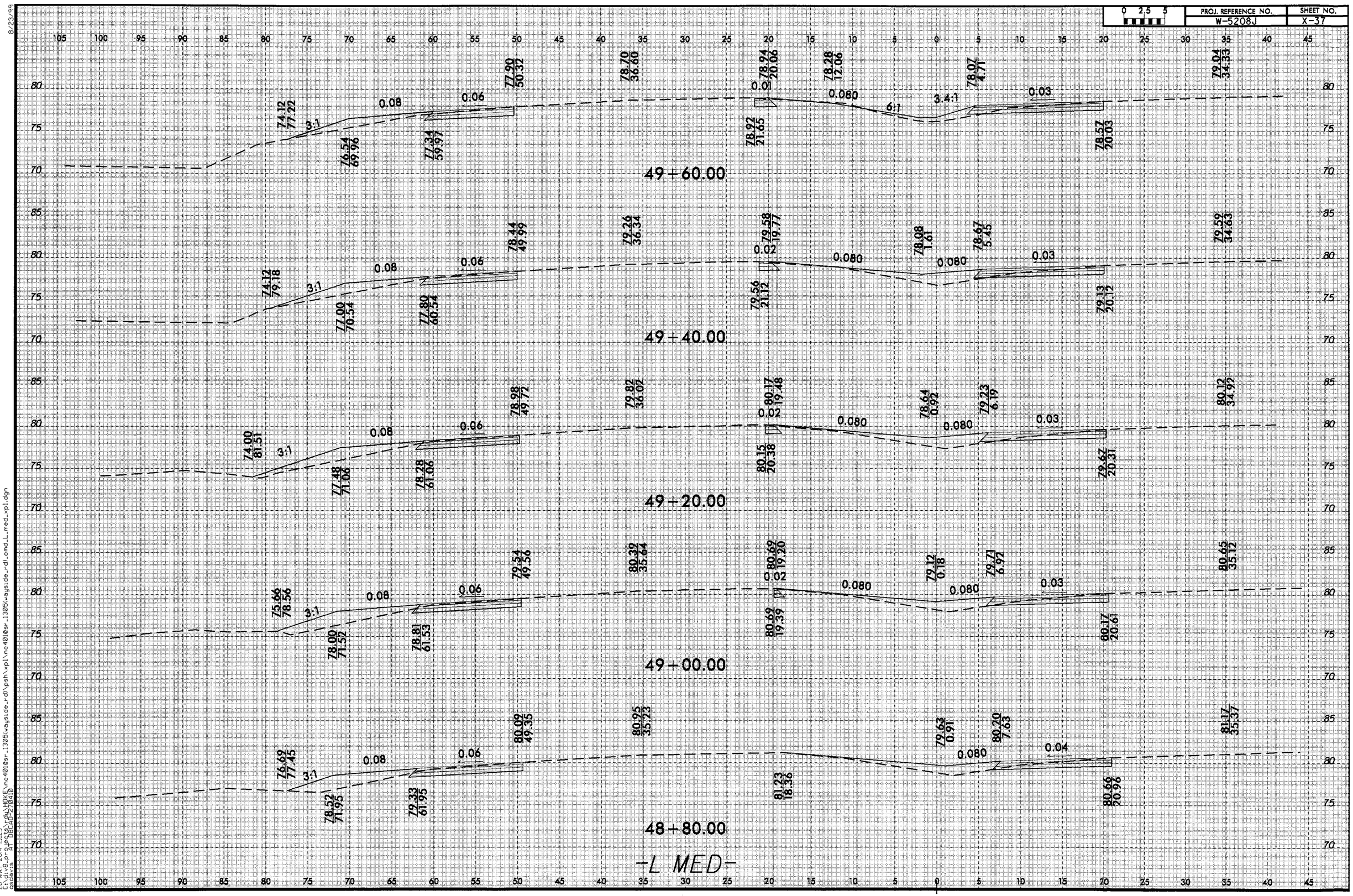

8/23/99

28-MAY-2014 13:25
c:\temp\pw_temp\HOKE\nc401asr_1305\wagside_rdl\psh\xpl\nc401asr_1305\wagside_rdl_cmd_L_med_xpl.dgn
Cleavis
Level: 1 Scale: 1 Date: 06-06-2014

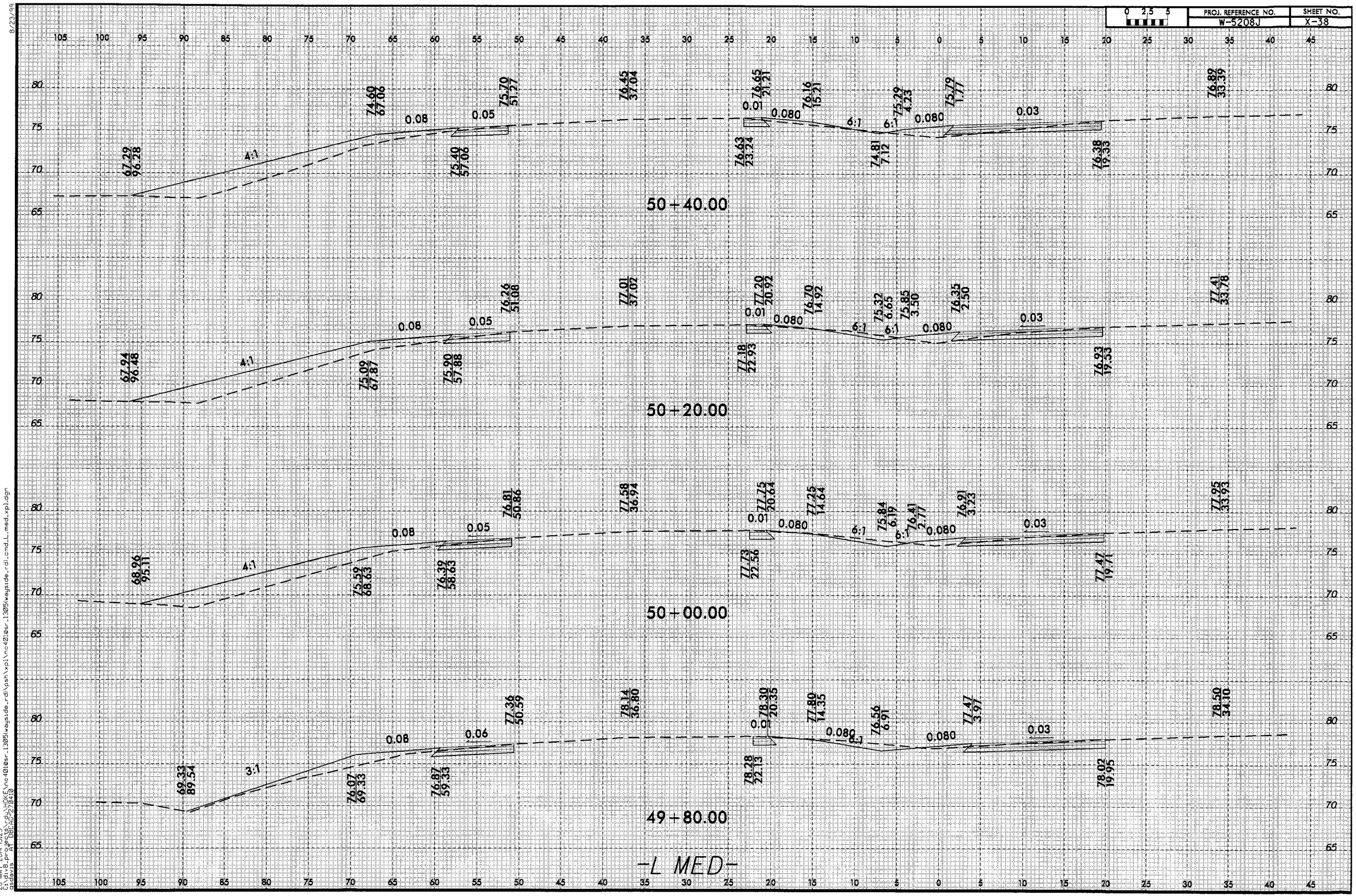

8/23/99

28-MAY-2014 13:25
C:\div8_pro_pc25\rdu\HOKE\nc4018sr_1305\wayside_rdl\psh\xpl\nc4018sr_1305\wayside_rdl_cmd_L_med_xpl.dgn
AP DBCAD=270410
asdavis

PROJ. REFERENCE NO.	SHEET NO.
W-5208J	X-39

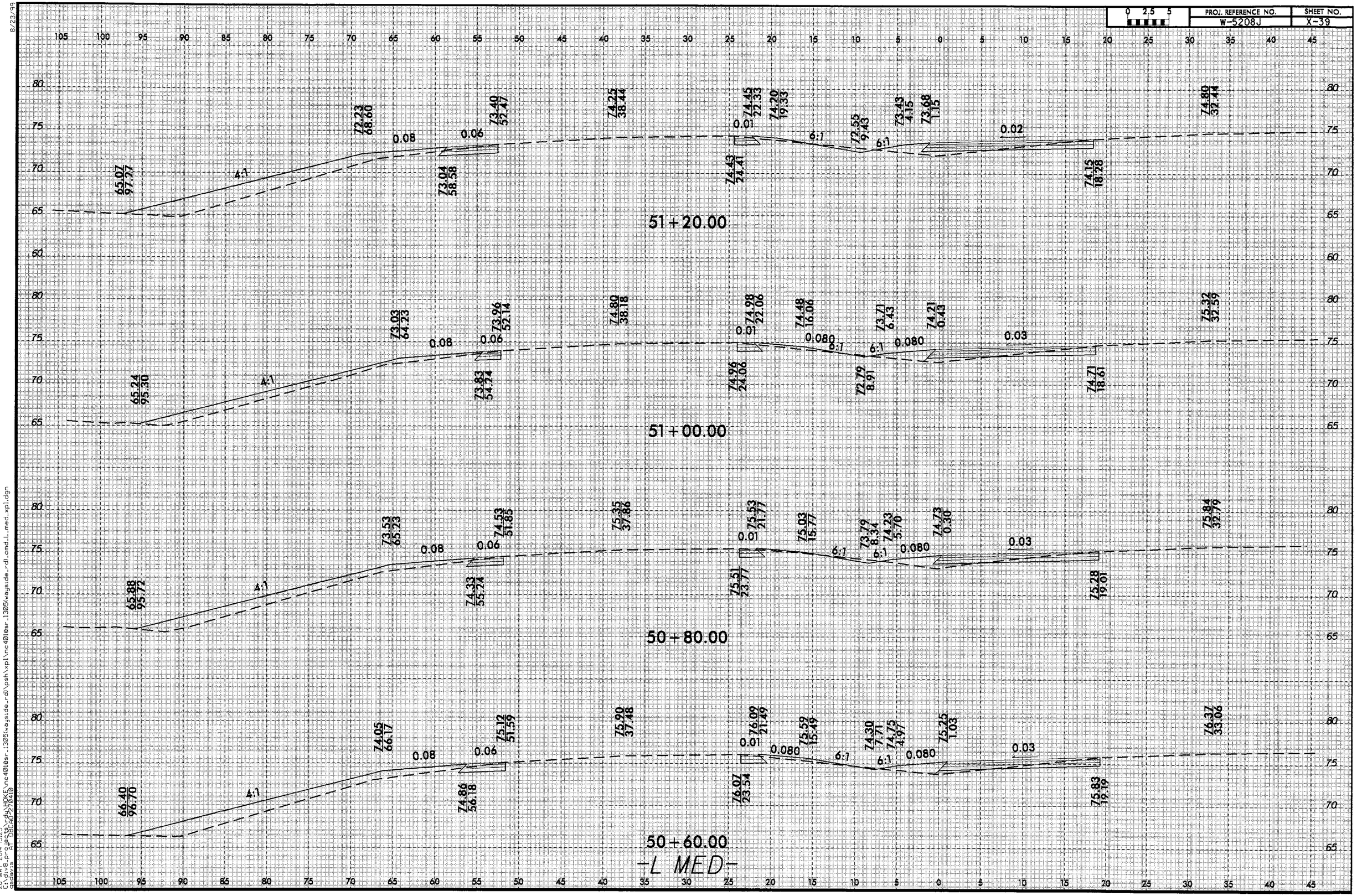

8/23/99

28-MAY-2014 13:25
C:\DGN6_PW_WORK\dgnwrkdy\HOKE\vnc4010sr_1305\wayside_rdl\psh\xpl\vnc4010sr_1305\wayside_rdl_cmd_L_med_xpl.dgn
a1_DBCA02_20410
gadavis

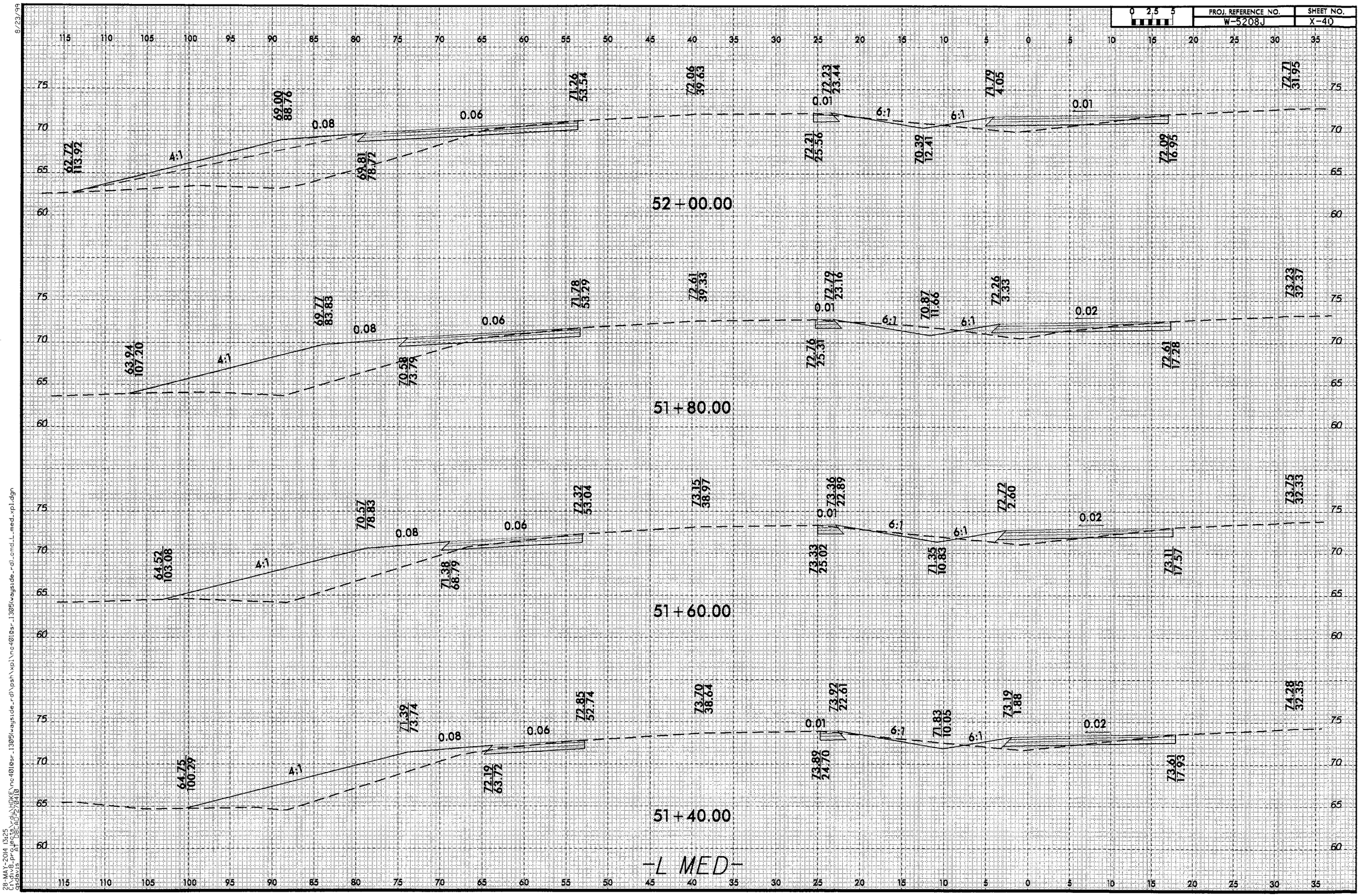

8/23/99

28-MAY-2014 13:25
t:\div8_projects\rdx\HOKE\nc4010sr_1305\wayside_rd\psh\xpl\nc4010sr_1305\wayside_rd\cmd_L_med.xpl.dgn
at DBCAD=270410
gsdavis

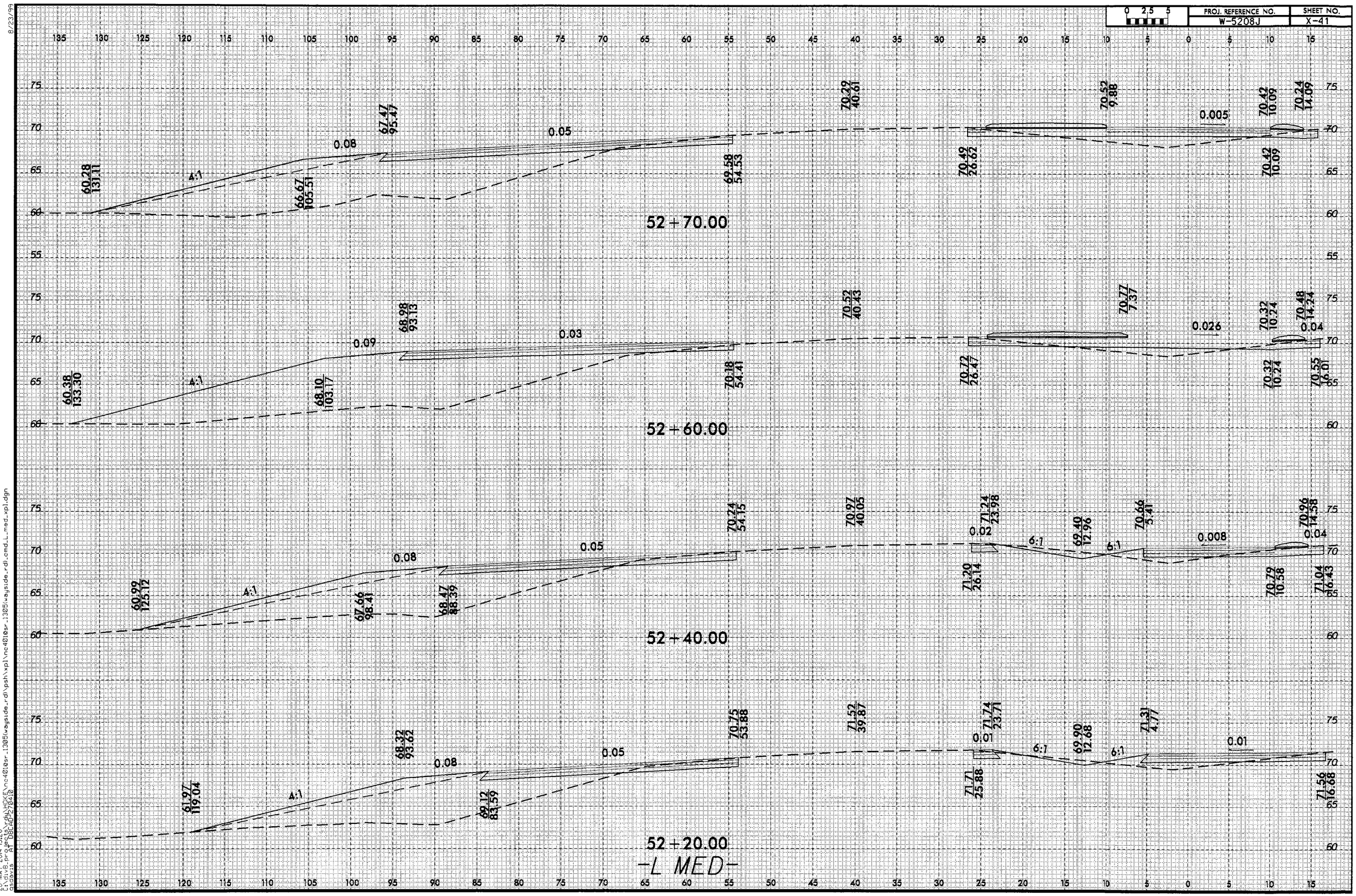

8/23/99

28-MAY-2014 13:26
ECMS_prod
ATTR DBCAD=276410
asdavis
c:\mdp_prod\HOKEN\nc4018sr_1305\wayside_rdl\psh\xpl\nc4018sr_1305\wayside_rdl_cmd_L_med_xpl.dgn

8/23/99

PROJ. REFERENCE NO.	SHEET NO.
W-5208J	X-42

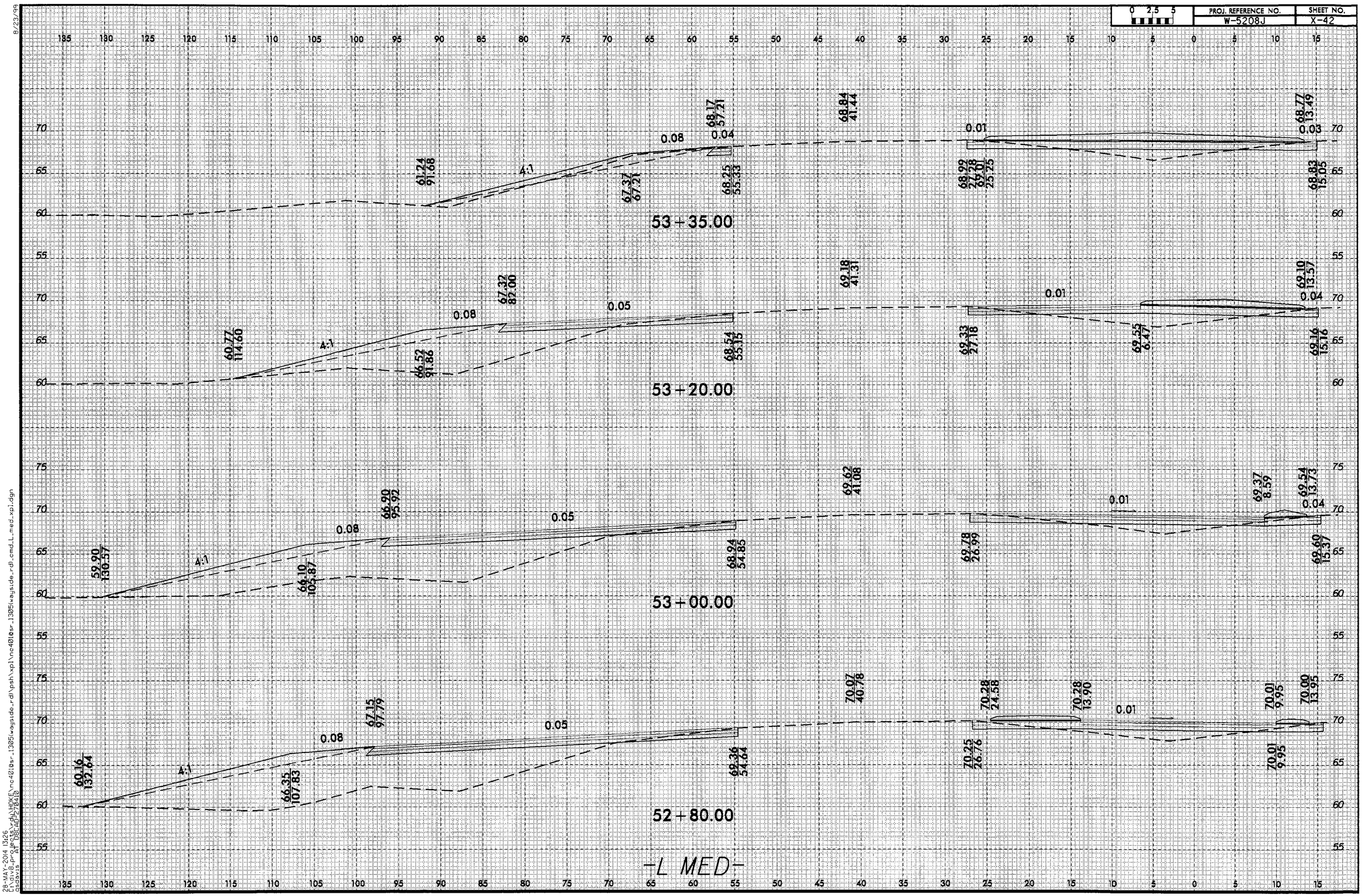

28-MAY-2014 13:26
C:\dgn9_projects\rdu\HDKF\nc4010sr_1305(wayside_rd)\psh\xpl\nc4010sr_1305(wayside_rd)_cmd_L_med_xpl.dgn
aasavis

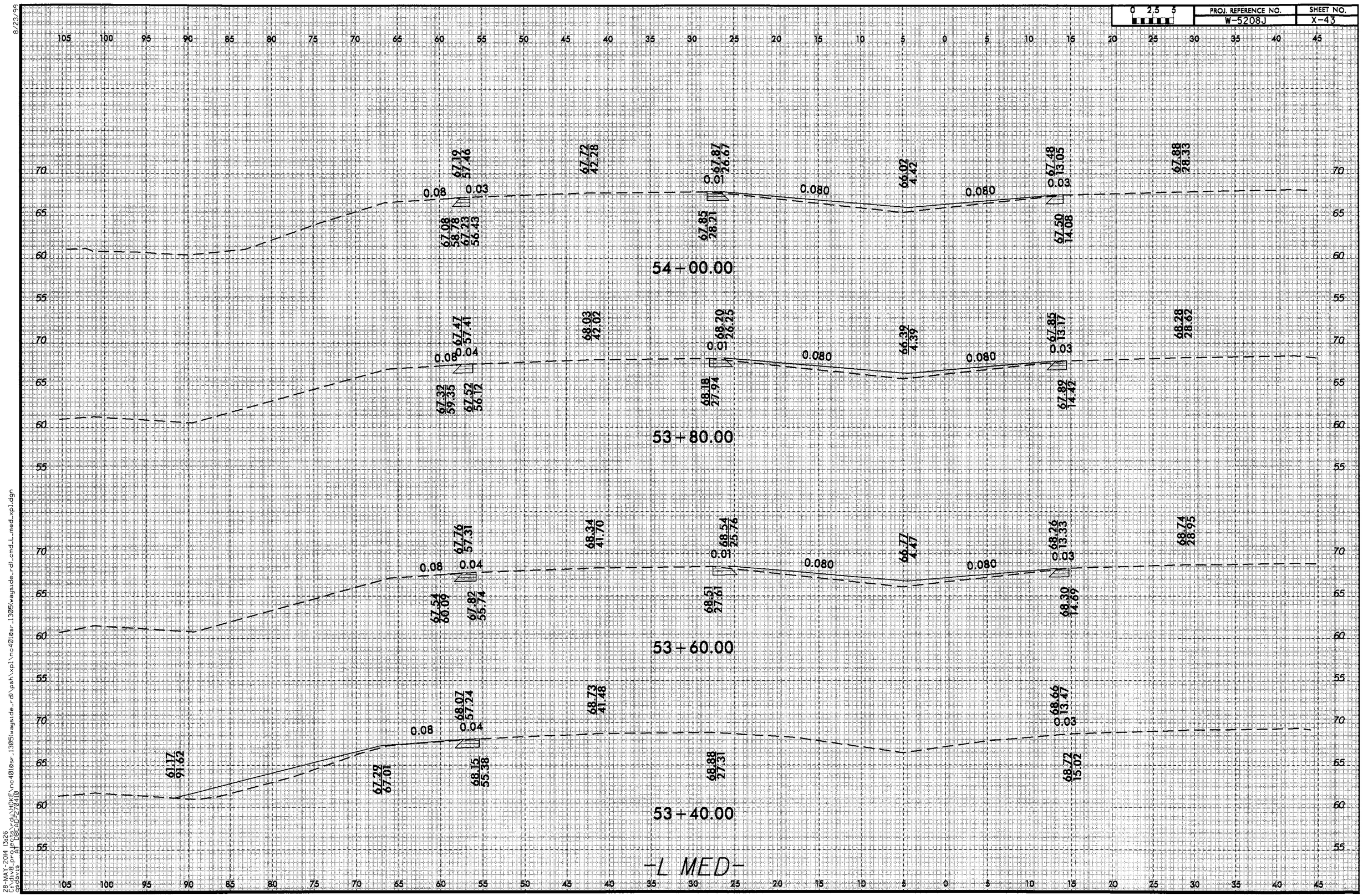

8/23/99
28-MAY-2014 13:26
c:\div8_projects\d_d\WDOT\nc401&sr_1305\wayside_rd\psh\xpl\nc401&sr_1305\wayside_rd_cmd_L_med_xpl.dgn
$$$$USER$$$$
$$$$DATE$$$$

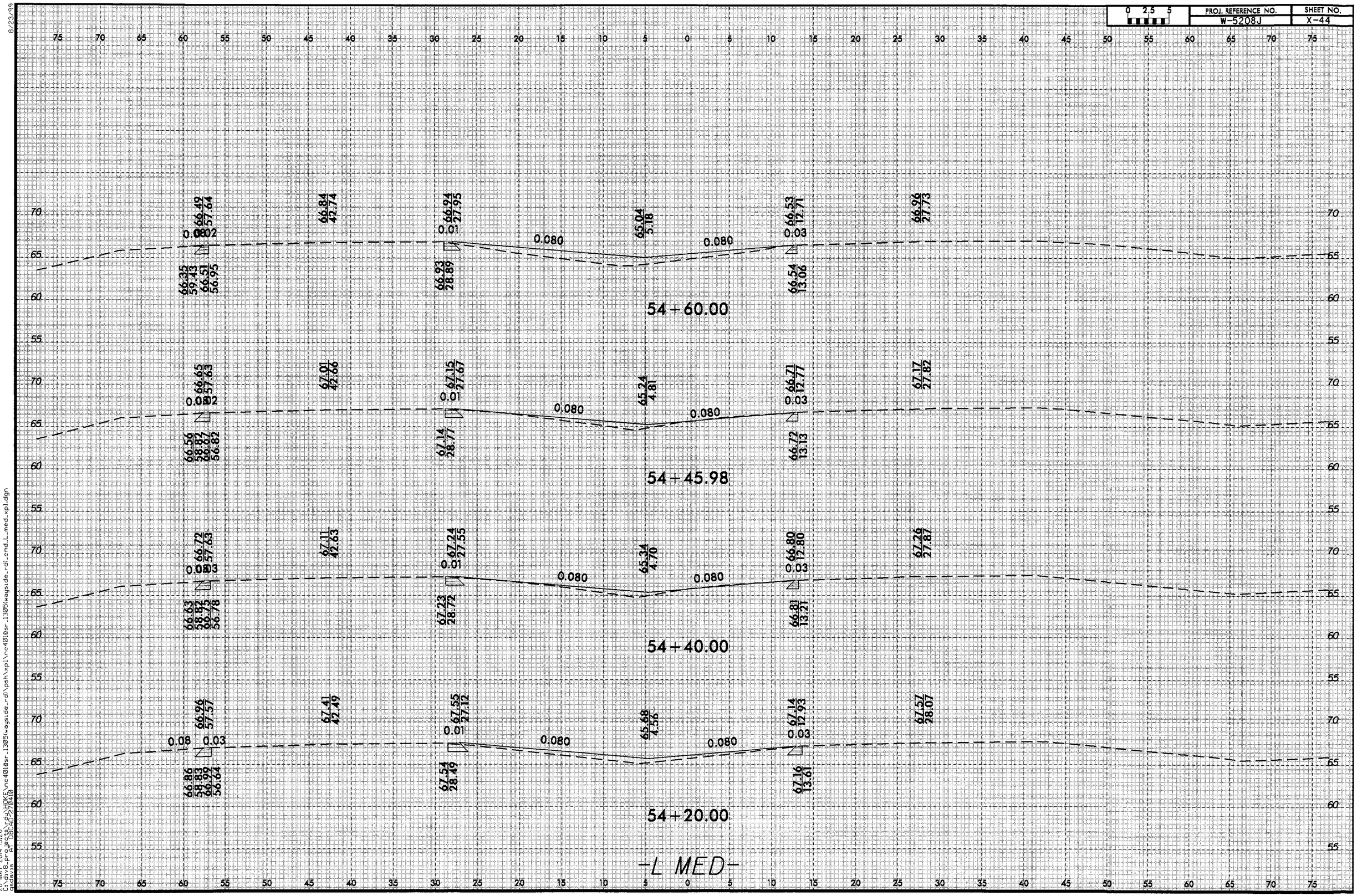

8/23/99

28-MAY-2014 13:26
C:\div8_proj\ed08_rdb\HOK\vnc4010sr_1305\wayside_rdl\psh\xpl\vnc4010sr_1305\wayside_rdl.cmd.L_med_xpl.dgn

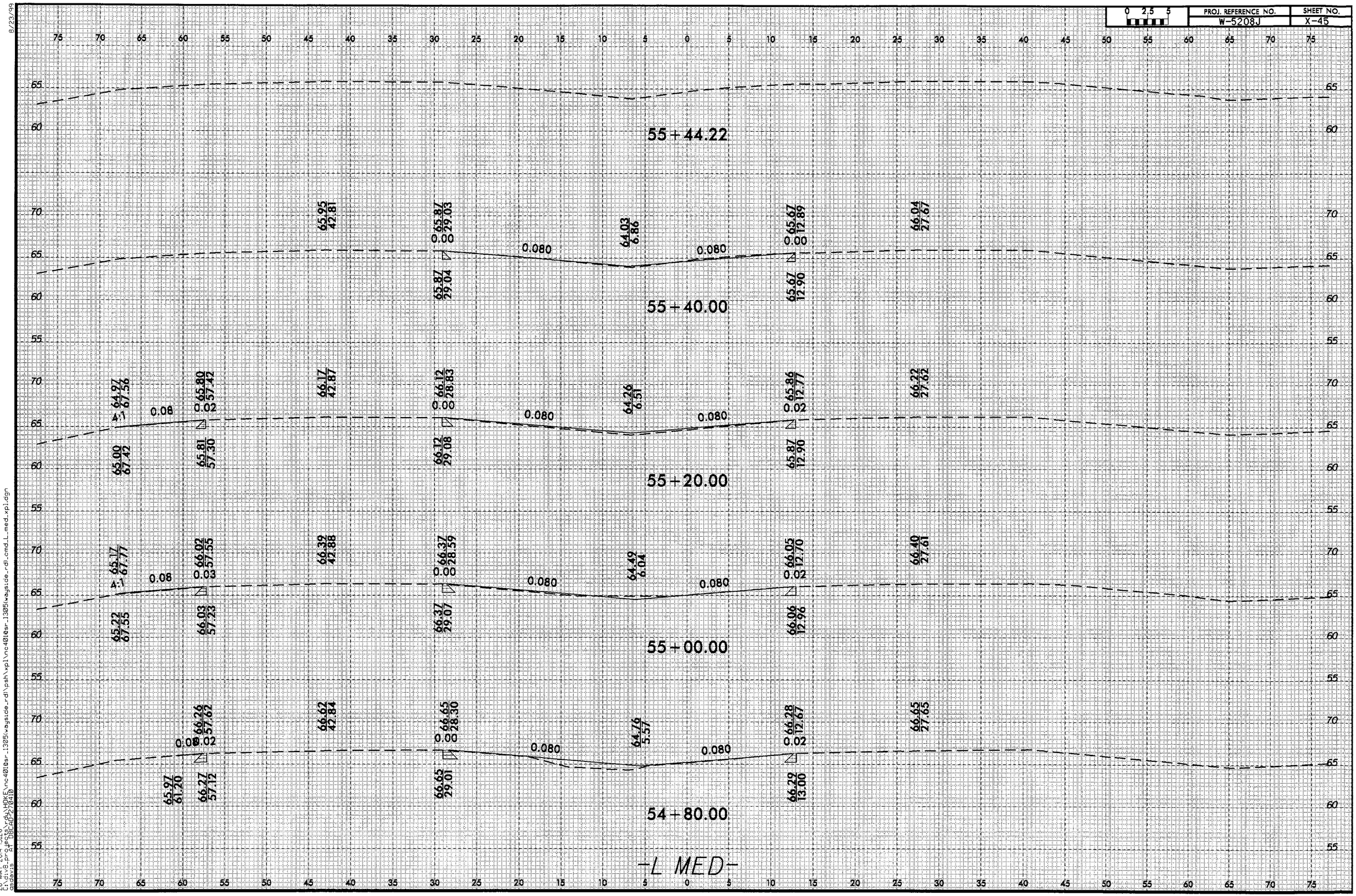

8/23/99

28-MAY-2014 13:26
C:\pwidg_projects\OBCADD\27041D
C:\pwidg_projects\OBCADD\27041D\HDX(E)\nc401@sr_1305i\wayside_rdl\psh\xpl\nc401@sr_1305i\wayside_rdl_cmd_L_med_xpl.dgn

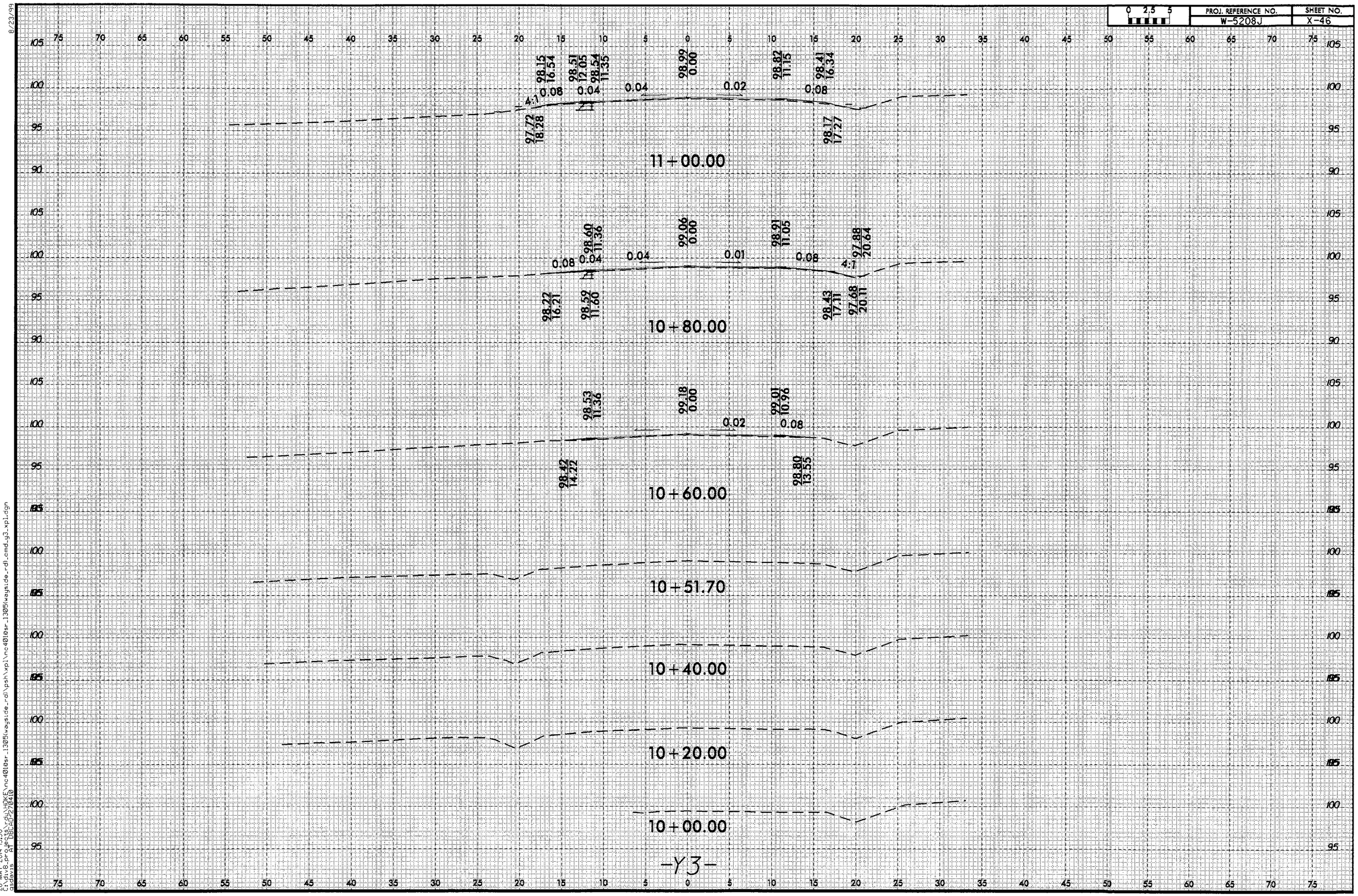

8/23/99
28-MAY-2014 15:30
C:\WORK\pwworking\ncdot\HDKE\nc4010sr_1305\wayside_rd\psh\xpl\nc4010sr_1305\wayside_rd\cmd_y3_xpl.dgn
asdavis
PLOT SCALE: 1:1
PLOT DATE: 08-AUG-2014

PROJ. REFERENCE NO.	SHEET NO.
W-5208J	X-47

0 2.5 5

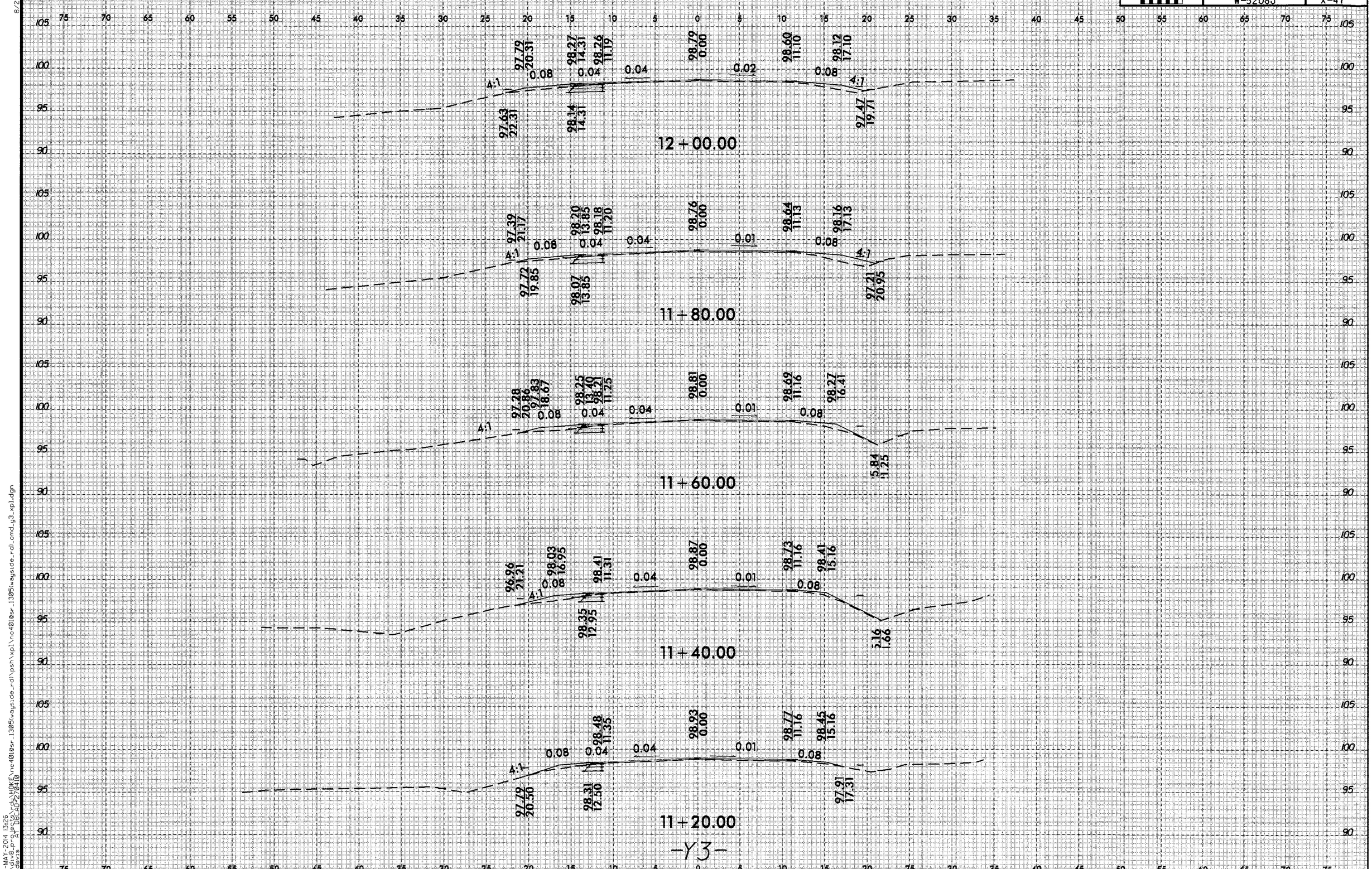

-Y3-

8/23/99

28-MAY-2014 13:26
C:\div8_projects_rdj\HOKE\nc4010sr_13051wagside_rdl\psh\xpl\nc4010sr_13051wagside_rdl.cmd_g3_xpl.dgn
cadsvcs

0 2.5 5	PROJ. REFERENCE NO.	SHEET NO.
	W-5208J	X-48

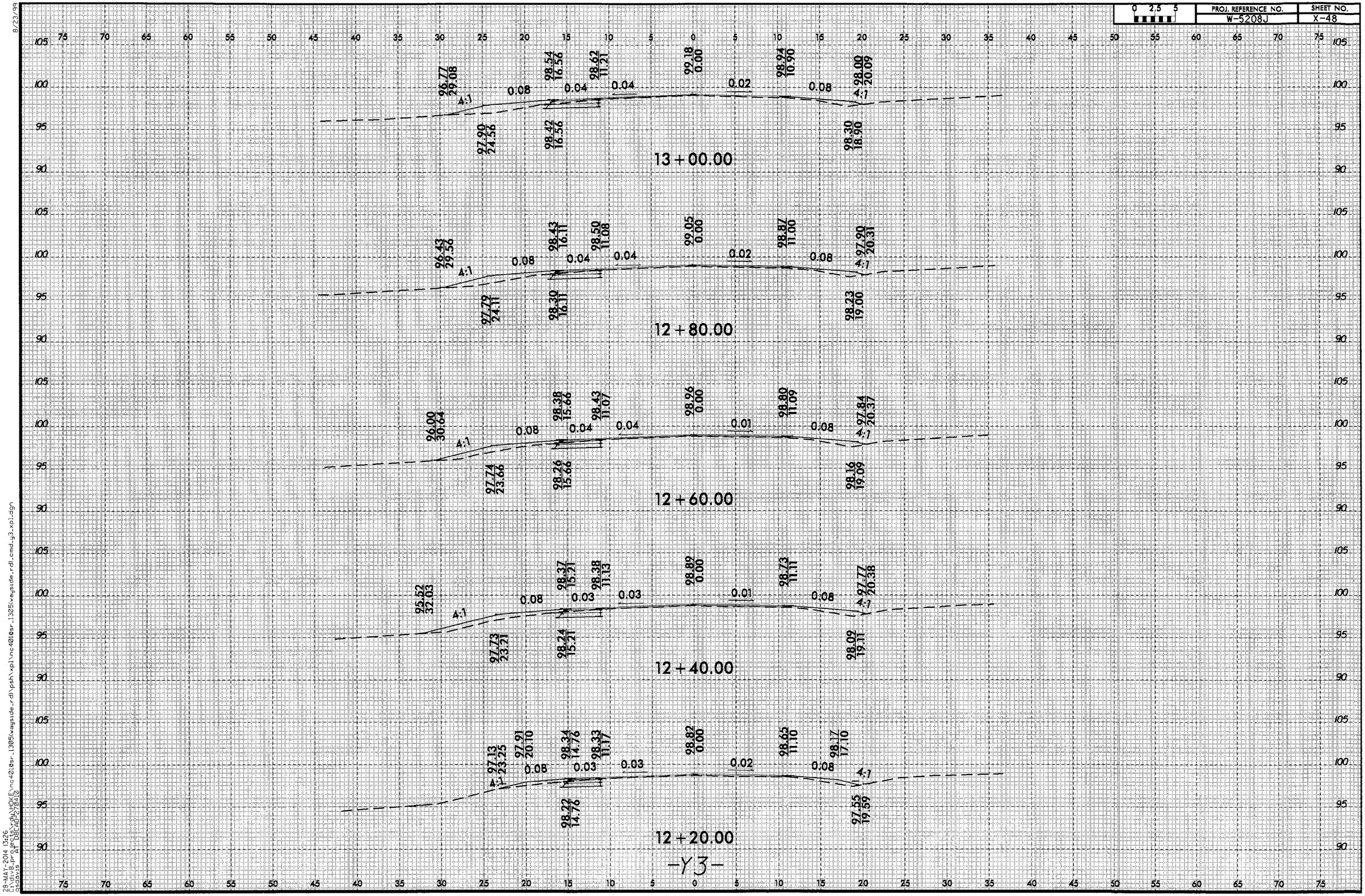

-Y3-

8/23/99

28-MAY-2014 13:26
C:\div8_projects\rdy\h0f5\nc4010sr_1305lwayside_rd\psh\xpl\nc4010sr_1305lwayside_rd.cmd-g3_xpl.dgn
Casavis

0 2.5 5	PROJ. REFERENCE NO.	SHEET NO.
	W-5208J	X-49

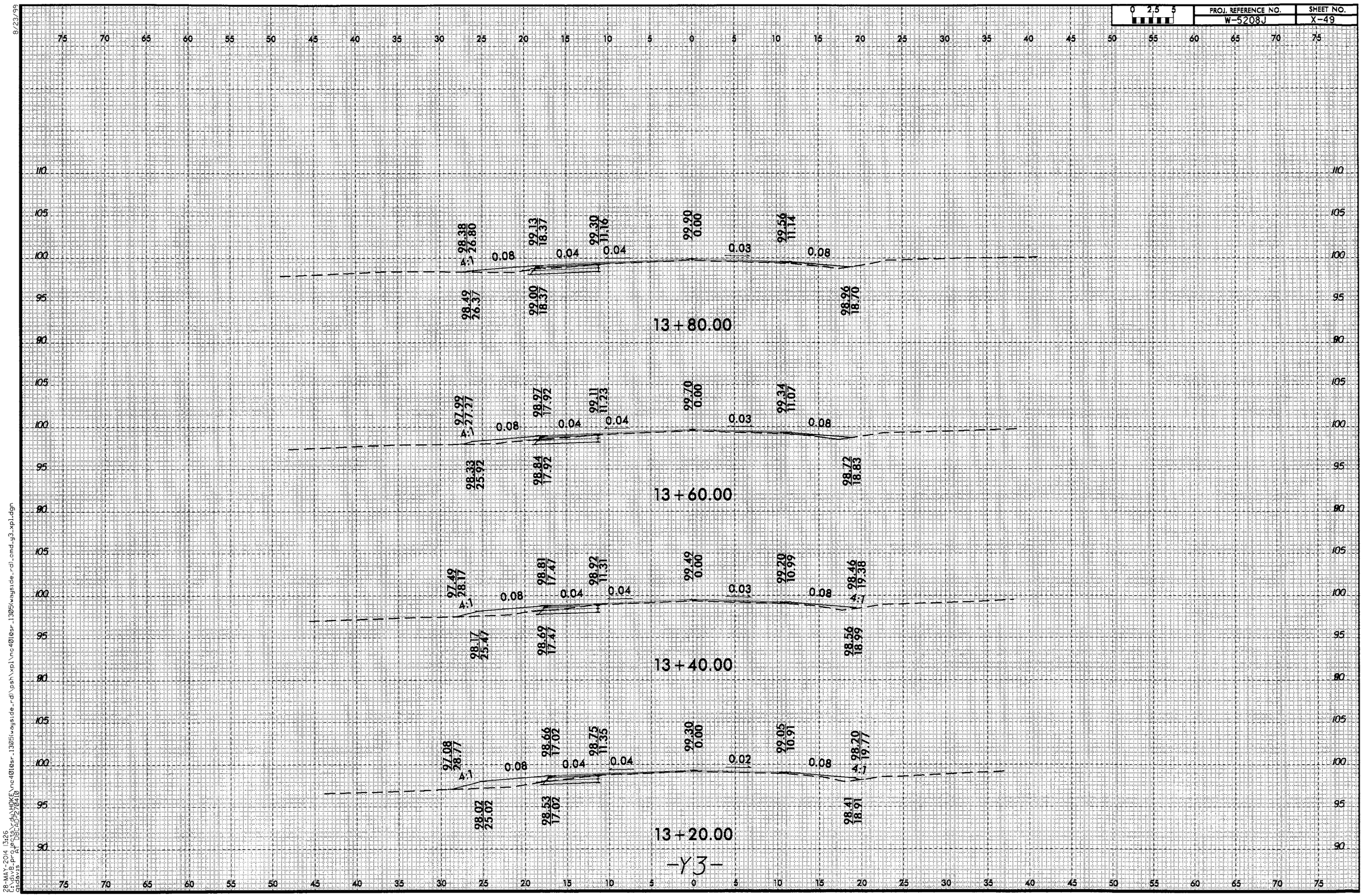

-Y3-

8/23/99

28-MAY-2014 13:26
c:\dv8_prj\pc38_rdu\HDKF\nc4018sr_13085\wayside_rd\psh\xpl\nc4018sr_13085\wayside_rd\cmd_y3_xpl.dgn
Bentley Systems, Inc. PowerPlot 8.11.07.618

0 2.5 5	PROJ. REFERENCE NO.	SHEET NO.
	W-5208J	X-50

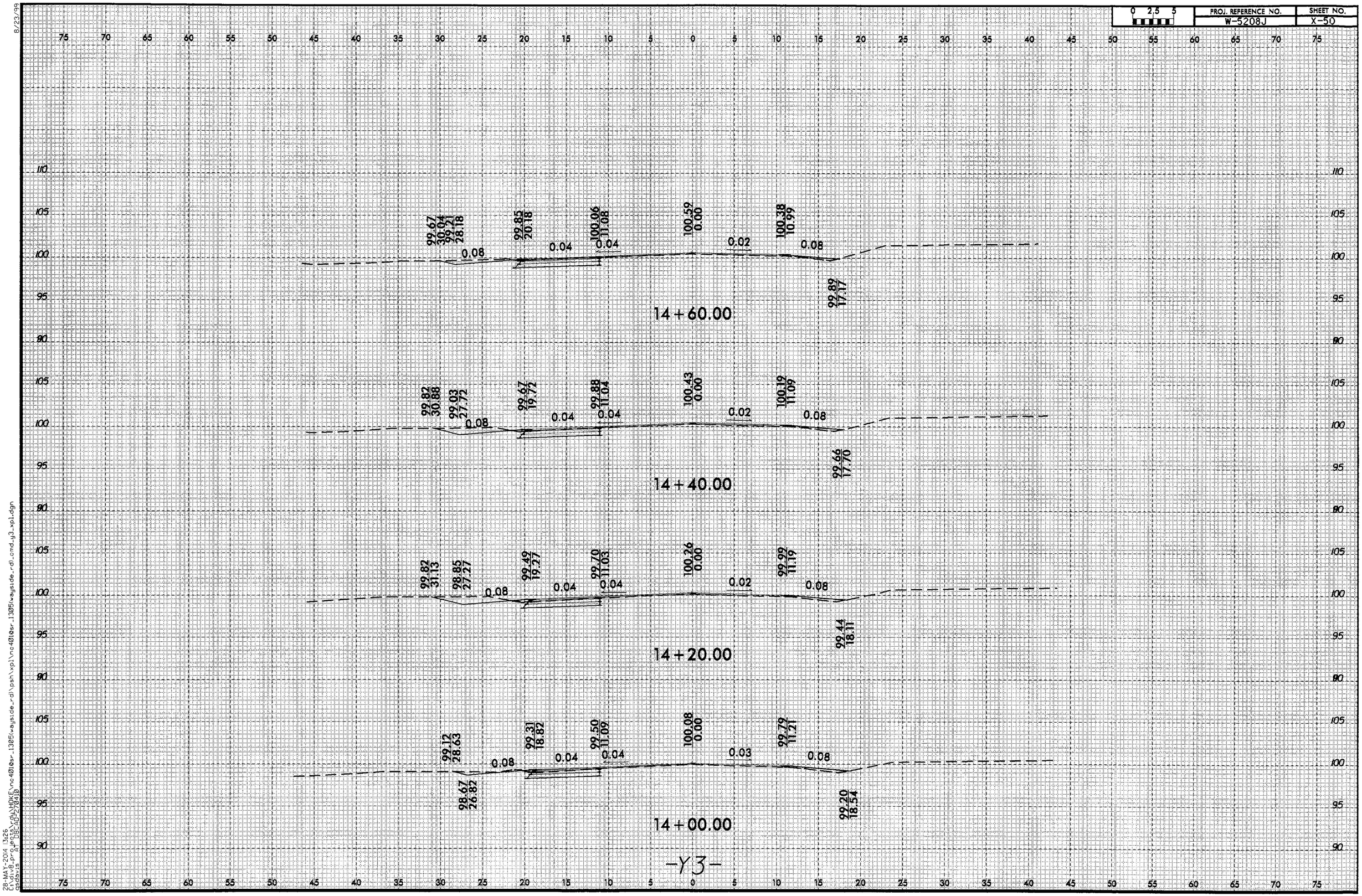

8/23/99

28-MAY-2014 13:26
c:\dv8_projects\dgn\HOKE\nc401@sr_1305\wayside_rd\psh\xpl\nc401@sr_1305\wayside_rd_cmd_y3_xpl.dgn
cadmus_pw\bsn\270410

0 2.5 5	PROJ. REFERENCE NO.	SHEET NO.
	W-5208J	X-51

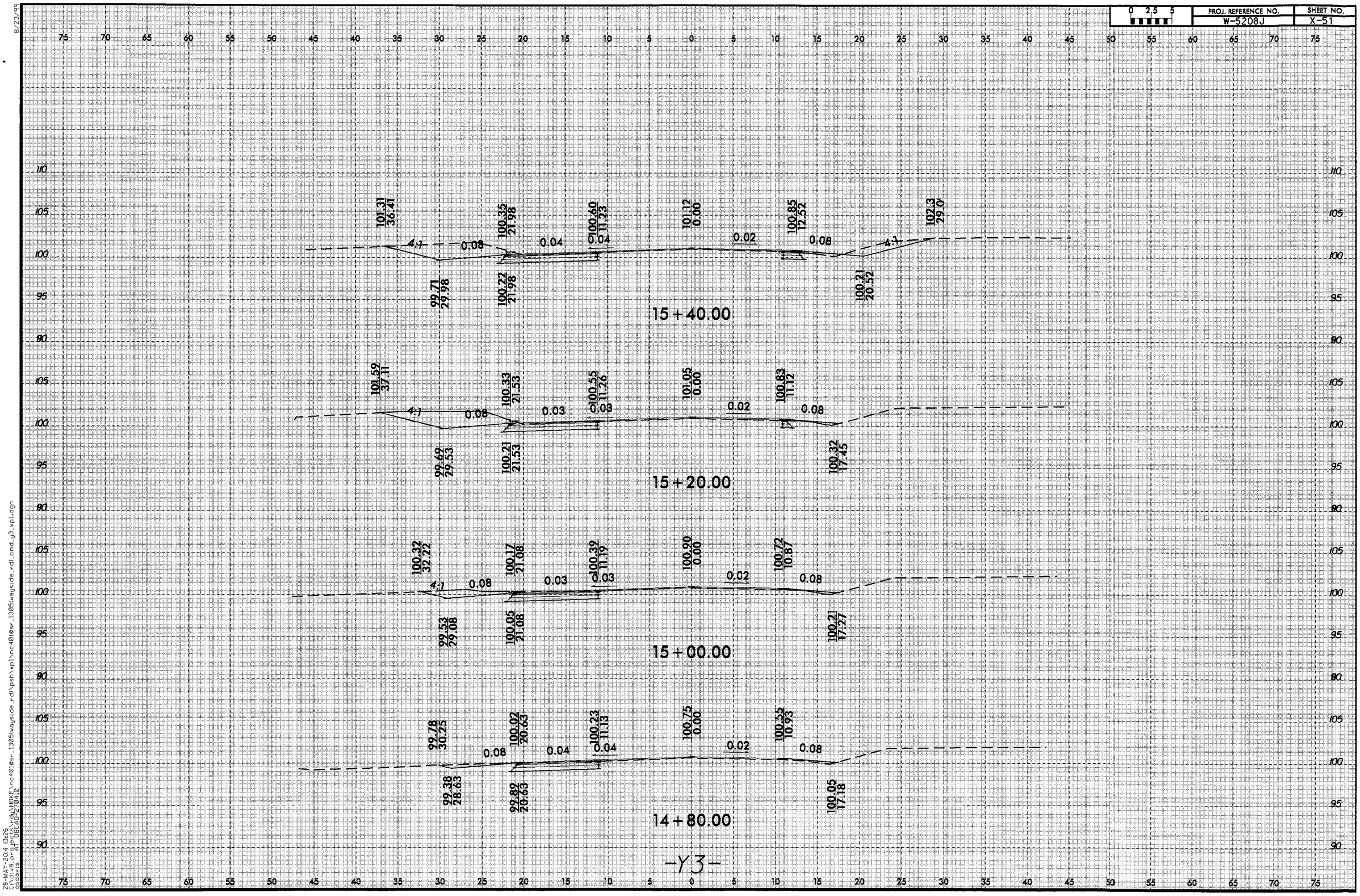

8/23/99

28-MAY-2014 13:26
C:\pw8_projects\hdr\HDKF\nc401@sr_13051\wayside_rdl\psh\xpl\nc401@sr_13051\wayside_rdl_cmd_y3_xpl.dgn
nc401@sr_13051_cmd_y3_xpl

0 2.5 5	PROJ. REFERENCE NO.	SHEET NO.
	W-5208J	X-52

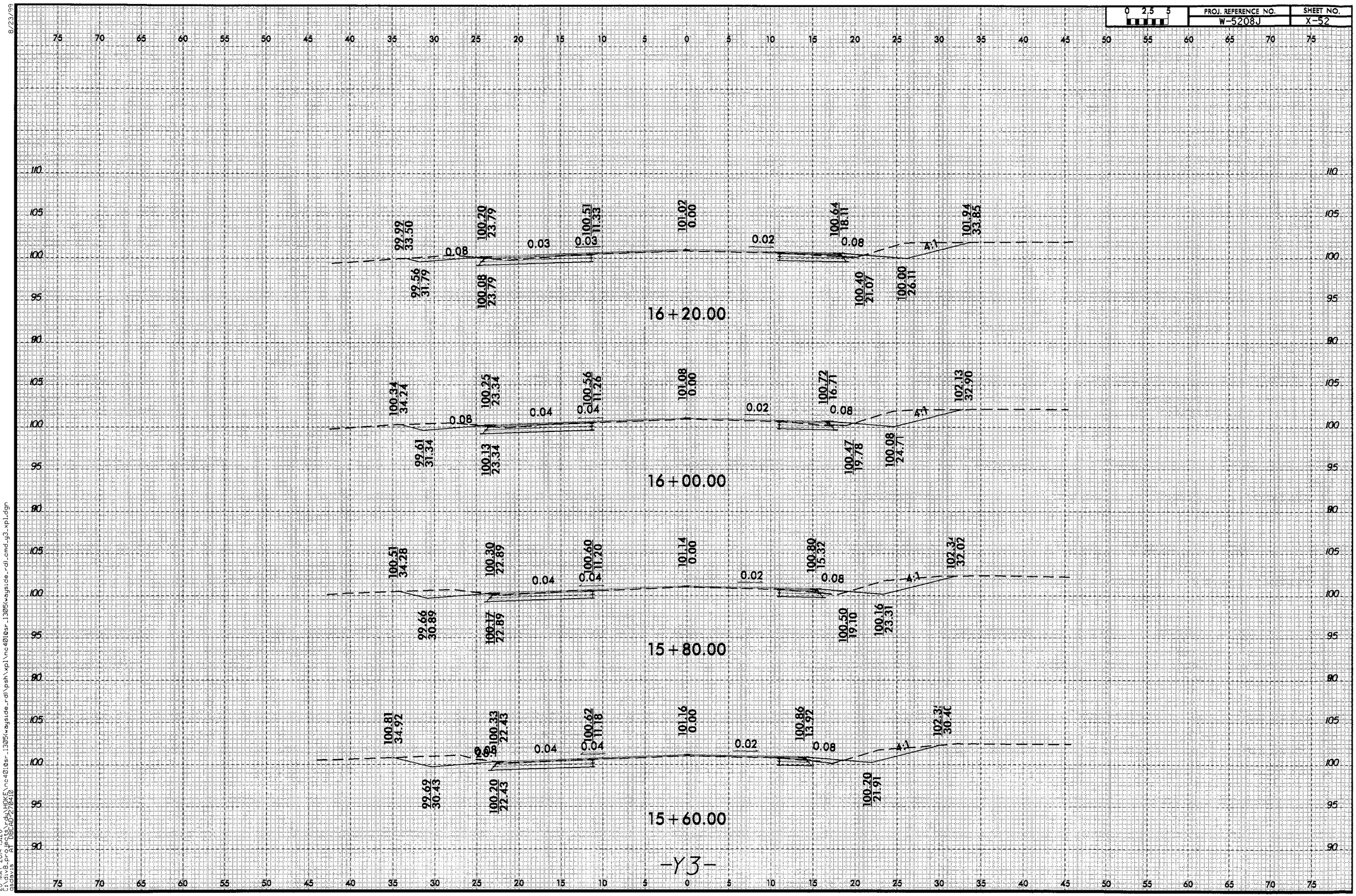

8/23/99

28-MAY-2014 13:26
C:\Wsb_projects\rdy\HDKE\nc40l0sr_l305\wayside_rdl\psh\xpl\nc40l0sr_l305\wayside_rdl_cmd_y3_xpl.dgn
AFDBCAD=270410
gsdavis

PROJ. REFERENCE NO.	SHEET NO.
W-5208J	X-53

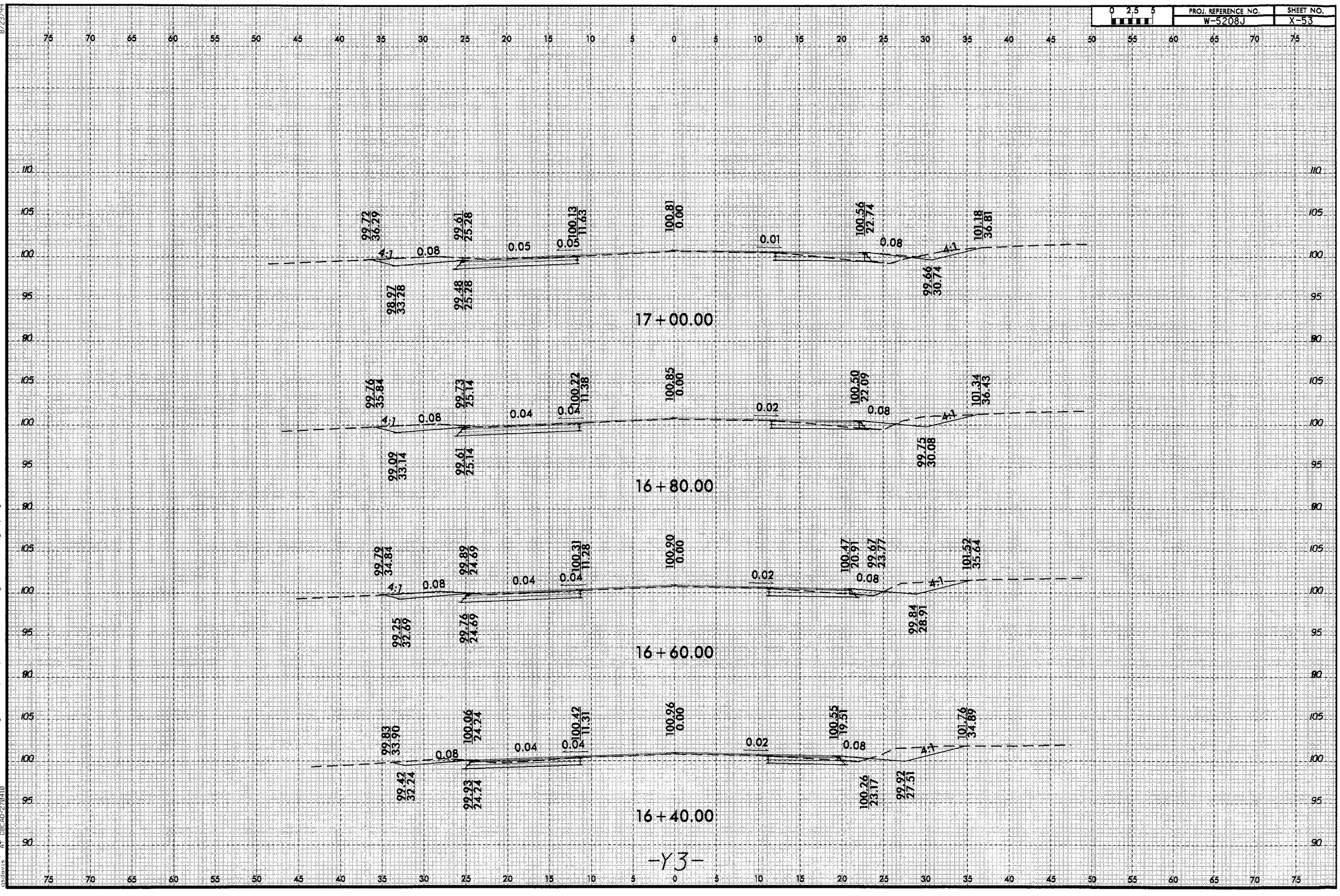

-Y3-

8/23/99

28-MAY-2014 13:26
C:\Civ8_projects\HOWE\nc401asr_1305\wayside_rdl\psh\xpl\nc401asr_1305\wayside_rdl_cmd_y3_xpl.dgn
Bentley Systems, Inc. V8 XM (08.11.09.702)

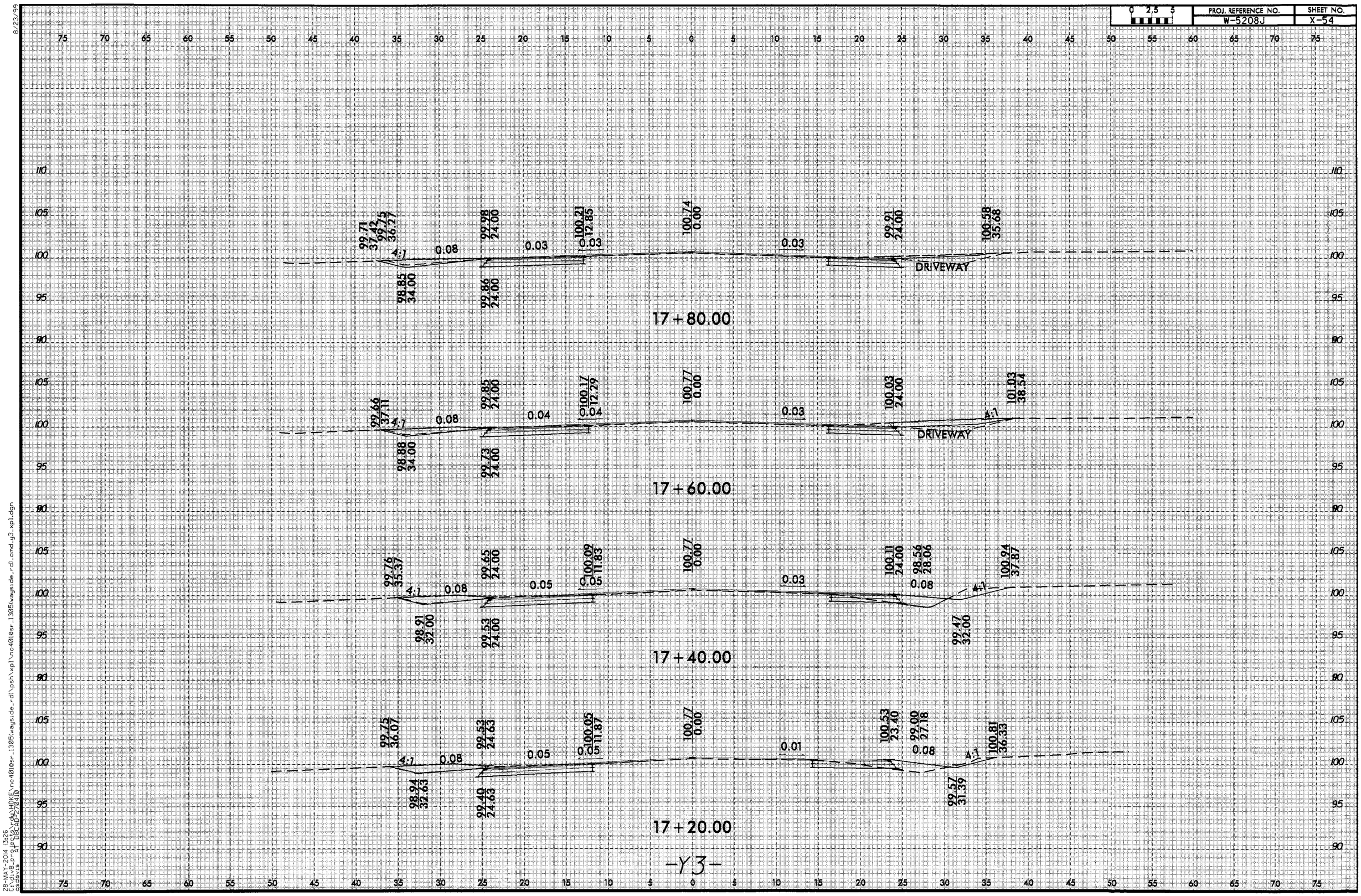

-Y3-

8/23/99
28-MAY-2014 13:26
C:\div8_projects\dot\HDXC\nc40108s-1305\wayside_rd\psh\xpl\nc40108s-1305\wayside_rd\cmd_y3_xpl.dgn
ssbaxs A1 DBCAD 27.04.10

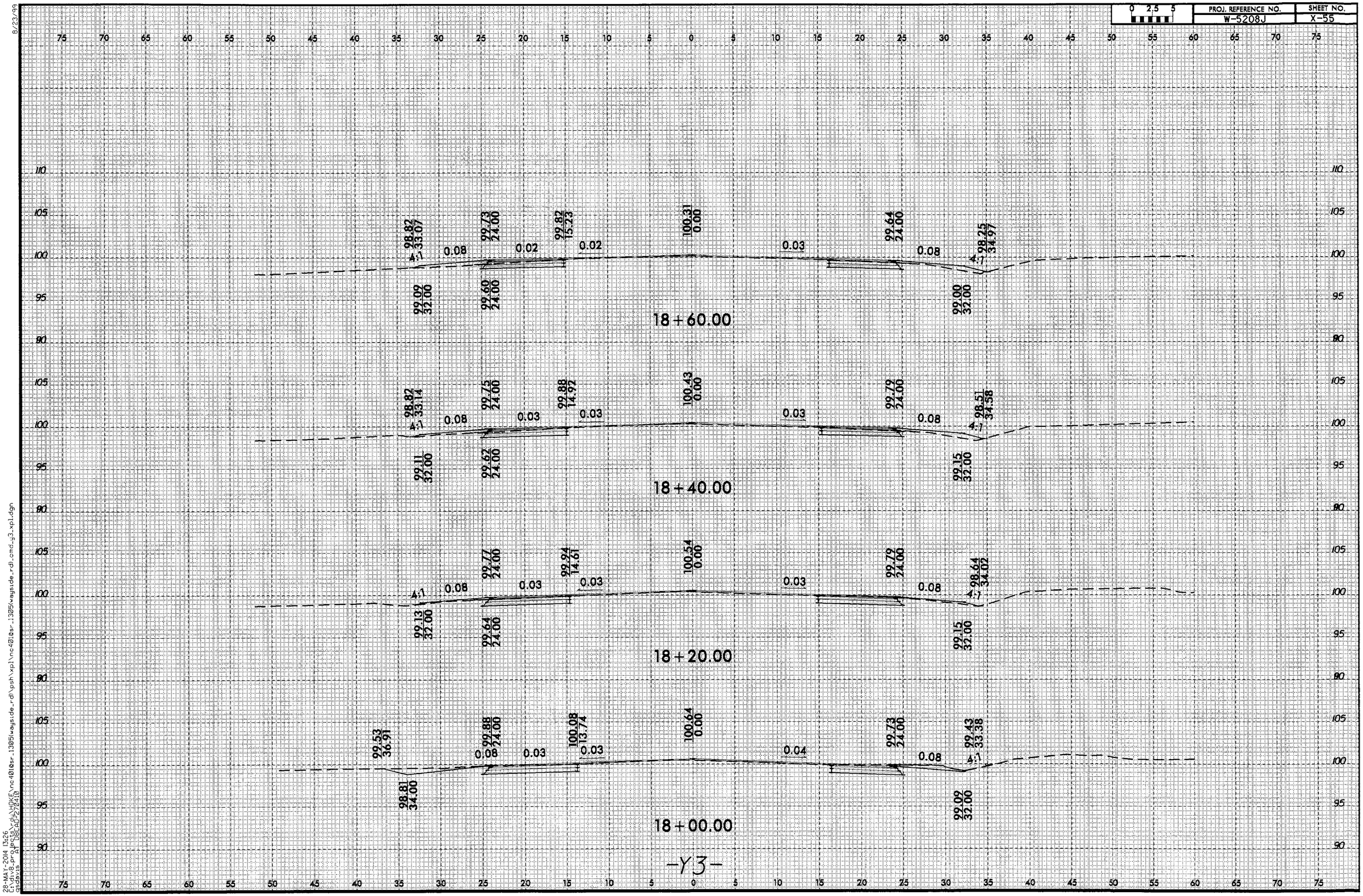

8/23/99
28-MAY-2014 13:26
C:\dgn8_projects\rdl\WORK\nc4018sr_13015\wayside_rdl\psh\xpl\nc4018sr_13015\wayside_rdl_cmd_y3_xpl.dgn
gsbavis AT DBG&A/ZPC4.10

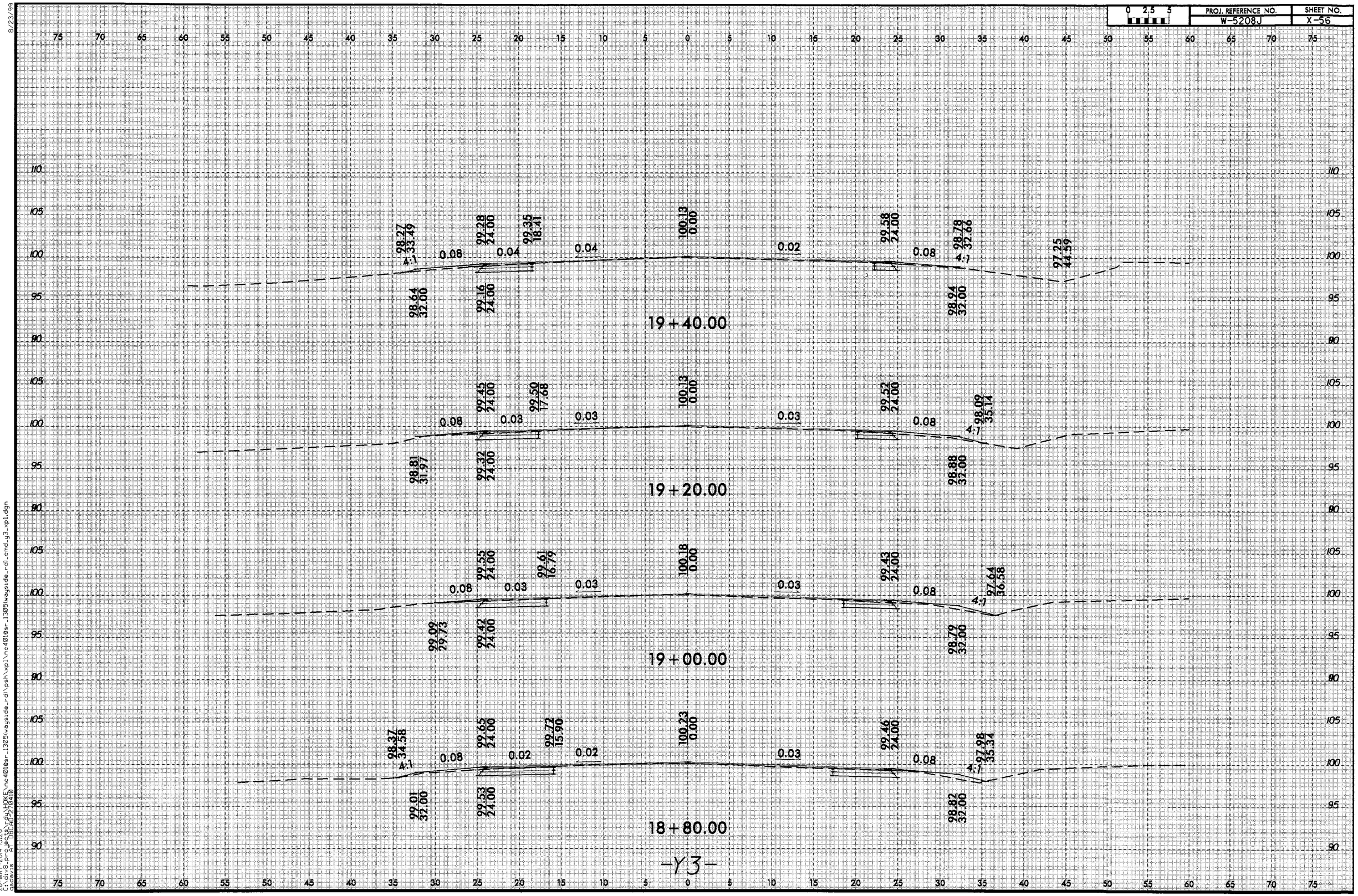
0 2.5 5
PROJ. REFERENCE NO.
W-5208J
SHEET NO.
X-56
19+40.00
28.27
33.49
4:1
0.08
99.28
24.00
0.04
99.35
18.41
0.04
100.13
0.00
0.02
99.58
24.00
0.08
98.78
32.66
4:1
97.25
44.59
28.64
32.00
99.16
24.00
28.94
32.00
19+20.00
98.81
31.97
0.08
99.45
24.00
0.03
99.50
17.68
0.03
100.13
0.00
0.03
99.52
24.00
0.08
98.09
35.14
4:1
99.32
24.00
98.88
32.00
19+00.00
0.08
99.55
24.00
0.03
99.61
16.79
0.03
100.18
0.00
0.03
99.43
24.00
0.08
97.64
36.58
4:1
99.09
29.73
99.42
24.00
98.79
32.00
18+80.00
98.37
34.58
4:1
0.08
99.65
24.00
0.02
99.72
15.90
0.02
100.23
0.00
0.03
99.46
24.00
0.08
97.98
35.34
4:1
99.01
32.00
99.53
24.00
98.82
32.00
-Y3-
8/23/99
28-MAY-2014 13:26
C:\pwworking\HDKE\nc4018sr1305\wayside_rd\psh\xpl\nc4018sr1305\wayside_rd_cmd_y3_xpl.dgn
$$DGNDB=270410
gsdavis

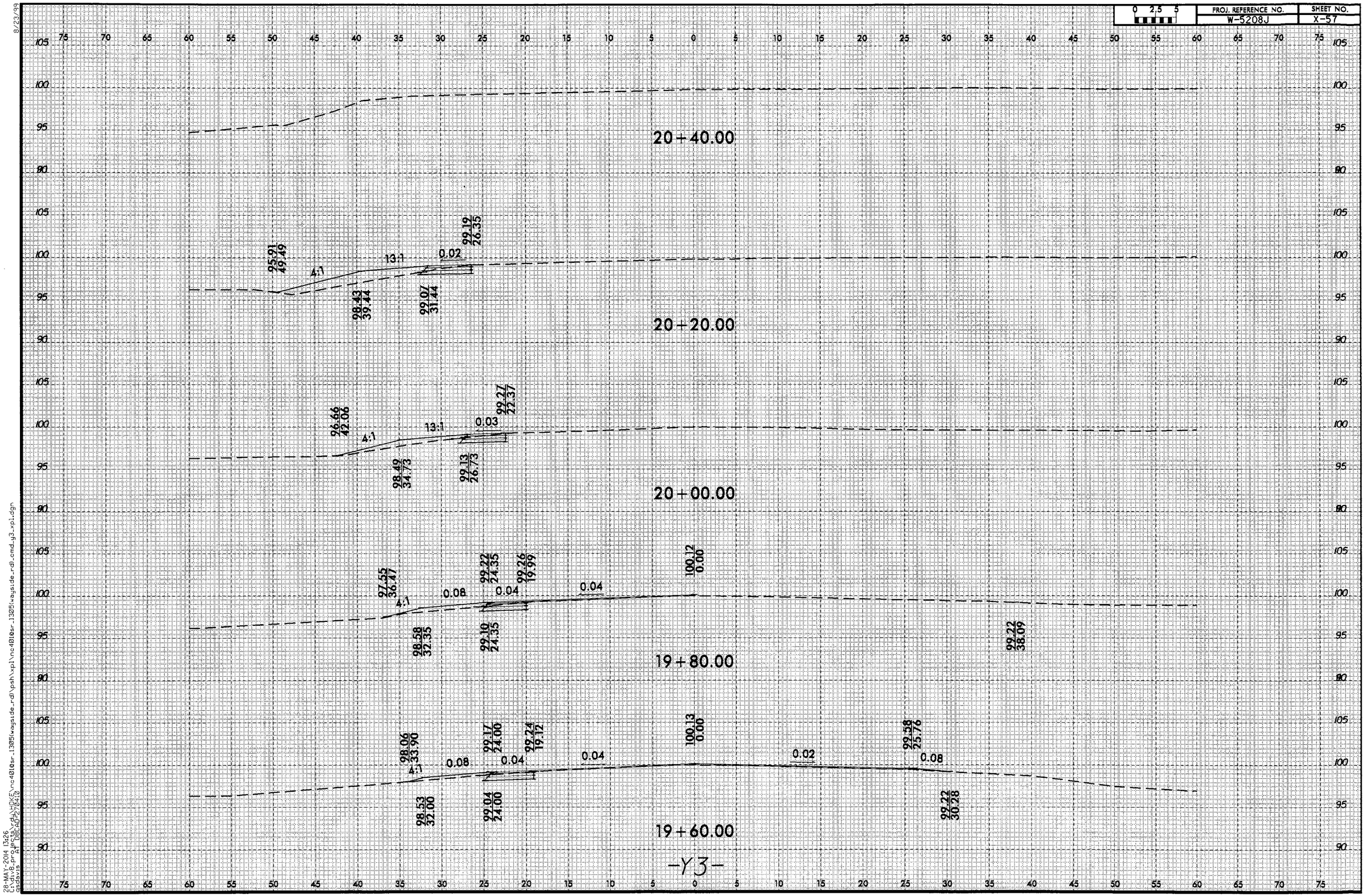
0 2.5 5
PROJ. REFERENCE NO.
W-5208J
SHEET NO.
X-57
20+40.00
95.21
49.49
4:1
13:1
0.02
99.19
26.35
98.43
39.44
99.07
31.44
20+20.00
96.66
42.06
4:1
13:1
0.03
99.27
22.37
98.49
34.73
99.13
26.73
20+00.00
97.55
36.47
4:1
0.08
0.04
99.22
24.35
99.26
19.99
0.04
100.12
0.00
98.58
32.35
99.10
24.35
99.22
38.09
19+80.00
98.06
33.90
4:1
0.08
0.04
99.17
24.00
99.24
19.12
0.04
100.13
0.00
0.02
99.58
25.76
0.08
98.53
32.00
99.04
24.00
99.22
30.28
19+60.00
-Y3-
8/23/99
28-MAY-2014 13:26
c:\div8_projects\rdl\hq25\nc4010sr_1305\wayside_rdl\psh\xpl\nc4010sr_1305\wayside_rdl.cmd_y3_xpl.dgn
jasbovis
ATDB&HQ-2040