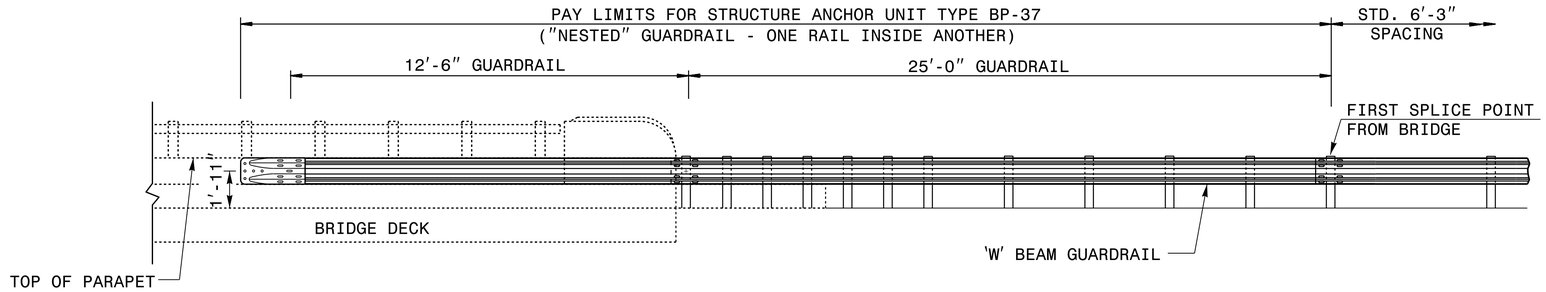

ELEVATION VIEW

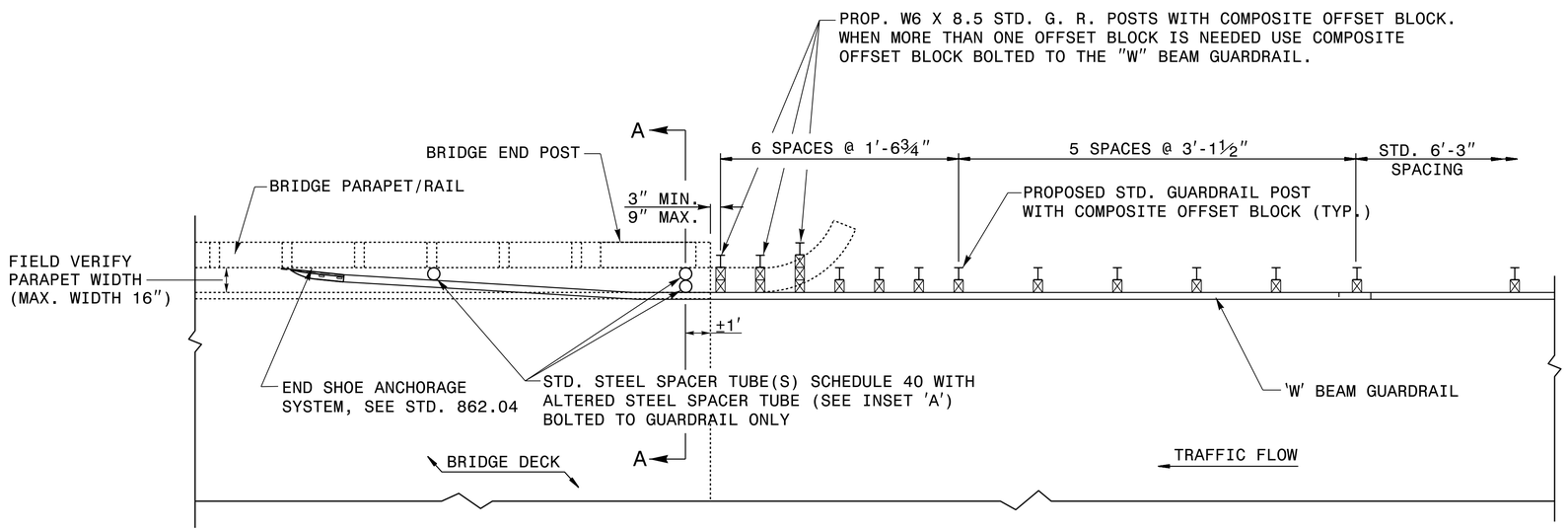

PLAN VIEW

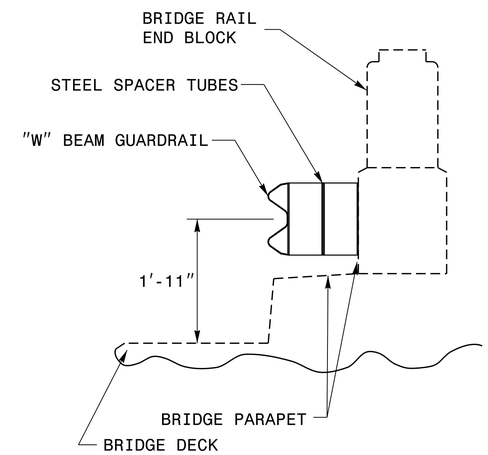

SECTION A-A

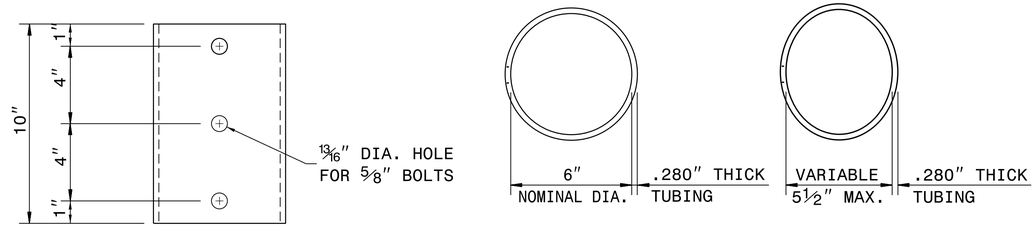

FRONT VIEW **PLAN VIEW** **PLAN VIEW INSET "A"**

STEEL SPACER TUBE

GENERAL NOTES:

1. NUTS, BOLTS, AND WASHERS ARE TO CONFORM TO THE REQUIREMENTS OF A.S.T.M. A-307 AND ARE TO BE GALVANIZED TO CONFORM TO THE REQUIREMENTS OF A.S.T.M. A-153.
2. ADDITIONAL FIELD HOLES MAY BE DRILLED IN STEEL RAIL AS DIRECTED BY THE ENGINEER.
3. ANCHOR GUARDRAIL END SHOE TO THE PARAPET IN ACCORDANCE WITH 862.04 OF THE STANDARD DRAWINGS.
4. PIPE FOR STEEL SPACER TUBES WIALL BE GALVANIZED STEEL PIPE WHICH CONFORMS TO THE REQUIREMENTS OF ASTM A-53

STRUCTURE ANCHOR UNIT, TYPE BP-37

CONTRACT STANDARDS AND DEVELOPMENT UNIT
Office 919-707-6950 FAX 919-250-4119

STRUCTURE ANCHOR UNIT TYPE BP-37

ORIGINAL BY: E.E. WARD DATE: 12-98
MODIFIED BY: DATE:
CHECKED BY: DATE:
FILE SPEC.: ward:\usr\details\stand\bp37.dgn

18-FEB-2015 16:28
Z:\rdu\randolph\sr_2269\vision_dr\psh\BP 37 on Bar Metal Rail.dgn
.gsdavis AT DBCAD-270410