**This electronic collection of documents is provided for the convenience of the user and is Not a Certified Document –**

**The documents contained herein were originally issued and sealed by the individuals whose names and license numbers appear on each page, on the dates appearing with their signature on that page.**
**This file or an individual page shall not be considered a certified document.**

DocuSign Envelope ID: 26EBC594-B910-4B77-AED7-3FD5CB0E1816

09/08/99

TIP PROJECT: B-5739

CONTRACT: DH00XXX

See Sheet 1A For Index of Sheets
See Sheet 1B For Conventional symbols
See Sheet 1C-1 For Survey Control Sheet

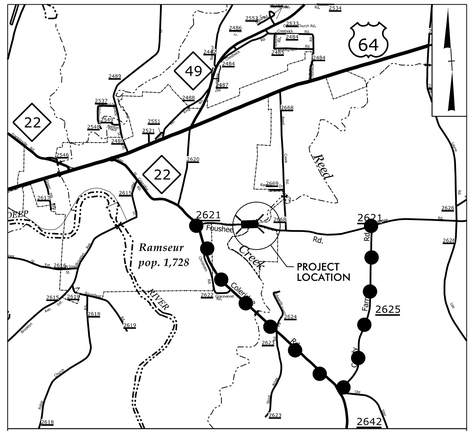


VICINITY MAP

OFF-SITE DETOUR ROUTE =

STATE OF NORTH CAROLINA
DIVISION OF HIGHWAYS

# RANDOLPH COUNTY

**LOCATION: REPLACE BRIDGE NO. 170 OVER REED CREEK ON SR 2621 (FOUSHEE ROAD)**

**TYPE OF WORK: GRADING, DRAINAGE, PAVING & STRUCTURE**

| STATE | STATE PROJECT REFERENCE NO. | SHEET NO. | TOTAL SHEETS |
|---|---|---|---|
| N.C. | B-5739 | 1 | |

| STATE PROJ. NO. | F.A. PROJ. NO. | DESCRIPTION |
|---|---|---|
| 45695.1.1 | BRZ-2621(004) | PE |
| 45695.1.1 | BRZ-2621(004) | R/W & UTILITIES |
| 45695.3.1 | BRZ-2621(004) | CONST. |

NAD 83
NA 2011

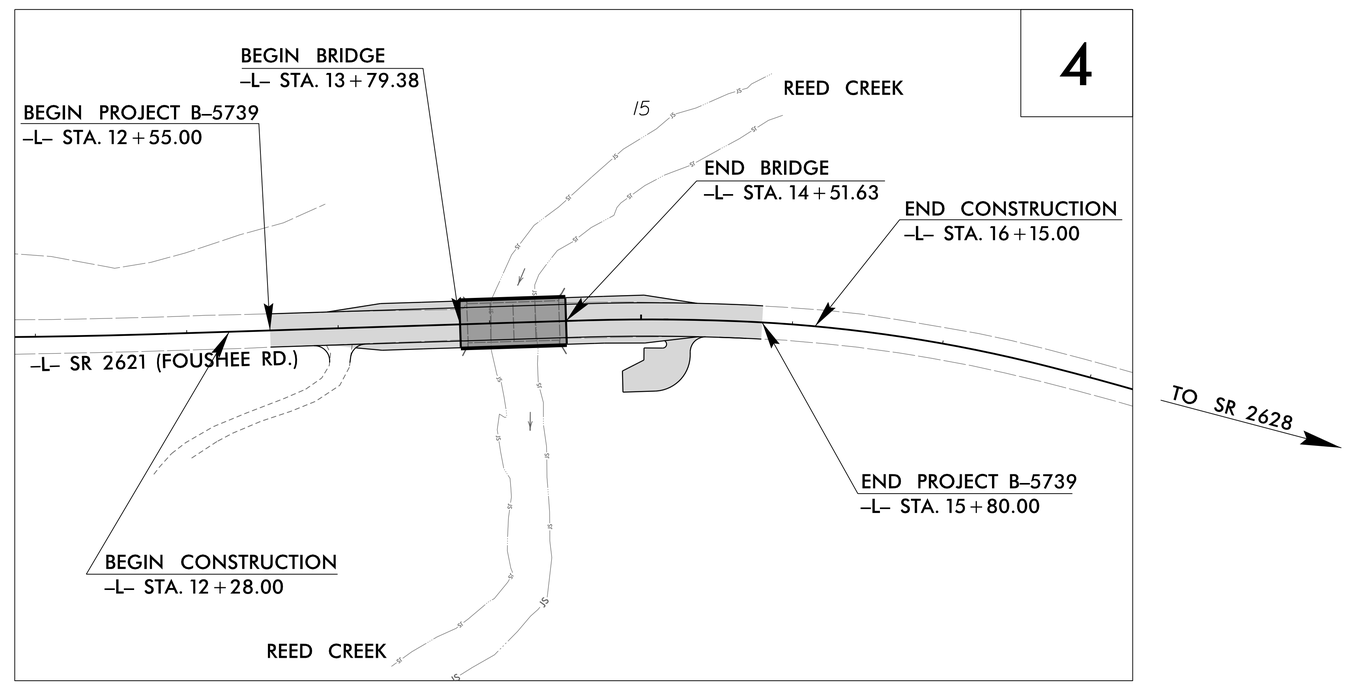


DOCUMENT NOT CONSIDERED FINAL UNLESS ALL SIGNATURES COMPLETED

**GRAPHIC SCALES**

20 10 0 20 40
PLANS

20 10 0 20 40
PROFILE (HORIZONTAL)

10 5 0 10 20
PROFILE (VERTICAL)

**DESIGN DATA**

ADT = 870

T = % *
V = 40 MPH
* TTST = DUAL
FUNC CLASS =
LOCAL
SUBREGIONAL TIER

**PROJECT LENGTH**

LENGTH OF ROADWAY PROJECT B-5739 = 0.048 MI
LENGTH OF STRUCTURE PROJECT B-5739 = 0.014 MI
TOTAL LENGTH OF PROJECT B-5739 = 0.062 MI

Prepared In the Office of:
SEPI ENGINEERING & CONSTRUCTION
1025 Wade Avenue
Raleigh, NC 27605
Tel:919-789-9977
Fax:919-789-9591
License: C-2197

2012 STANDARD SPECIFICATIONS

RIGHT OF WAY DATE:

LETTING DATE:
JUNE 27, 2017

BEN CRAWFORD, PE
PROJECT ENGINEER

MATTHEW COPPLE, PE
PROJECT DESIGN ENGINEER

TIM WELCH, PE
NCDOT CONTACT

**HYDRAULICS ENGINEER**
5/19/2017
DocuSigned by: Brian Mazzoli
DEF5D9B8005E4AA
P.E.
SIGNATURE:
NORTH CAROLINA PROFESSIONAL SEAL 33719 ENGINEER BRIAN MAZZOLI

**ROADWAY DESIGN ENGINEER**
5/19/2017
DocuSigned by: Benjamin R. Crawford
P.E.
SIGNATURE:
NORTH CAROLINA PROFESSIONAL SEAL 32606 ENGINEER BENJAMIN R. CRAWFORD

STATE OF NORTH CAROLINA DEPARTMENT OF TRANSPORTATION

5/19/2017
...\Proj\B-5739_Rdy_tsh.dgn
USER:thorris

DocuSign Envelope ID: 26EBC594-B910-4B77-AED7-3FD5CB0E1816

| PROJECT REFERENCE NO. | SHEET NO. |
|---|---|
| B-5739 | 1A |

ROADWAY DESIGN ENGINEER

5/19/2017

NORTH CAROLINA PROFESSIONAL SEAL 32606 ENGINEER BENJAMIN R. CRAWFORD

DocuSigned by: Benjamin R. Crawford

**DOCUMENT NOT CONSIDERED FINAL UNLESS ALL SIGNATURES COMPLETED**

SEPI ENGINEERING & CONSTRUCTION
1025 Wade Avenue
Raleigh, NC 27605
Tel:919-789-9977
Fax:919-789-9591
License: C-2197

INDEX OF SHEETS

| SHEET NUMBER | SHEET |
|---|---|
| 1 | TITLE SHEET |
| 1A | INDEX OF SHEETS, GENERAL NOTES, AND STANDARD DRAWINGS |
| 1B | CONVENTIONAL PLAN SHEET SYMBOLS |
| 1C-1 | SURVEY CONTROL SHEETS |
| 2A-1 | PAVEMENT SCHEDULE, WEDGING DETAIL, AND TYPICAL SECTIONS |
| 2C-1 | STRUCTURE ANCHOR UNIT DETAIL, TYPE III |
| 3B-1 | SUMMARY OF EARTHWORK, DRAINAGE SUMMARY, GUARDRAIL SUMMARY, REMOVAL OF ASPHALT PAVEMENT SUMMARY, AND SHOULDER BERM GUTTER SUMMARY |
| 4 | PLAN SHEET |
| 5 | PROFILE SHEET |
| TMP-1 THRU TMP-4 | TRANSPORTATION MANAGEMENT PLANS |
| PMP-1 THRU PMP-2 | PAVEMENT MARKING PLANS |
| EC-1 THRU EC-5 | EROSION CONTROL PLANS |
| UC-1 THRU UC-4 | UTILITY CONSTRUCTION PLANS |
| UO-1 THRU UO-3 | UTILITIES BY OTHERS PLANS |
| X-1 | CROSS-SECTION SUMMARY SHEET |
| X-2 THRU X-7 | CROSS-SECTIONS |
| S-1 THRU S-14 | STRUCTURE PLANS |

GENERAL NOTES:

2012 SPECIFICATIONS
EFFECTIVE: 01-17-2012
REVISED: 10-31-2014

GRADING AND SURFACING OR RESURFACING AND WIDENING:

THE GRADE LINES SHOWN DENOTE THE FINISHED ELEVATION OF THE PROPOSED SURFACING AT GRADE POINTS SHOWN ON THE TYPICAL SECTIONS. WHERE NO GRADE LINES ARE SHOWN, THE PROFILES SHOWN DENOTE THE TOP ELEVATION OF THE EXISTING PAVEMENT ALONG THE CENTER LINE OF SURVEY ON WHICH THE PROPOSED RESURFACING WILL BE PLACED. GRADE LINES MAY BE ADJUSTED BY THE ENGINEER IN ORDER TO SECURE A PROPER TIE-IN.

CLEARING:

CLEARING ON THIS PROJECT SHALL BE PERFORMED TO THE LIMITS ESTABLISHED BY METHOD III.

SUPERELEVATION:

ALL CURVES ON THIS PROJECT SHALL BE SUPERELEVATED IN ACCORDANCE WITH STD. NO. 225.04 USING THE RATE OF SUPERELEVATION AND RUNOFF SHOWN ON THE PLANS. SUPERELEVATION IS TO BE REVOLVED ABOUT THE GRADE POINTS SHOWN ON THE TYPICAL SECTIONS.

SHOULDER CONSTRUCTION:

ASPHALT, EARTH, AND CONCRETE SHOULDER CONSTRUCTION ON THE HIGH SIDE OF SUPERELEVATED CURVES SHALL BE IN ACCORDANCE WITH STD. NO. 560.01

SIDE ROADS:

THE CONTRACTOR WILL BE REQUIRED TO DO ALL NECESSARY WORK TO PROVIDE SUITABLE CONNECTIONS WITH ALL ROADS, STREETS, AND DRIVES ENTERING THIS PROJECT. THIS WORK WILL BE PAID FOR AT THE CONTRACT UNIT PRICE FOR THE PARTICULAR ITEMS INVOLVED.

GUARDRAIL:

THE GUARDRAIL LOCATIONS SHOWN ON THE PLANS MAY BE ADJUSTED DURING CONSTRUCTION AS DIRECTED BY THE ENGINEER. THE CONTRACTOR SHOULD CONSULT WITH THE ENGINEER PRIOR TO ORDERING GUARDRAIL MATERIAL.

TEMPORARY SHORING:

SHORING REQUIRED FOR THE MAINTENANCE OF TRAFFIC WILL BE PAID FOR AS "EXTRA WORK" IN ACCORDANCE WITH SECTION 104-7.

SUBSURFACE PLANS:

NO SUBSURFACE PLANS ARE AVAILABLE ON THIS PROJECT. THE CONTRACTOR SHOULD MAKE HIS OWN INVESTIGATION AS TO THE SUBSURFACE CONDITIONS.

END BENTS:

THE ENGINEER SHALL CHECK THE STRUCTURE END BENT PLANS, DETAILS, AND CROSS-SECTION PRIOR TO SETTING OF THE SLOPE STAKES FOR THE EMBANKMENT OR EXCAVATION APPROACHING A BRIDGE.

UTILITIES:

UTILITY OWNERS ON THIS PROJECT ARE Duke Energy-Power Distribution

Centurylink - Communications, Charter Communications (aka Time Warner Cable) -

Communications, Piedmont Natural Gas - Gas (Distribution), Town of Ramseur - Water

Distribution, Sanitary Sewer Collection, and Lift Station and Force Main

ANY RELOCATION OF EXISTING UTILITIES WILL BE ACCOMPLISHED BY OTHERS, EXCEPT AS SHOWN ON THE PLANS.

RIGHT-OF-WAY MARKERS:

ALL RIGHT-OF-WAY MARKERS ON THIS PROJECT SHALL BE PLACED BY CONTRACT.

EFF. 01-17-2012
REV. 02-29-2016

2012 ROADWAY ENGLISH STANDARD DRAWINGS

The following Roadway Standards as appear in "Roadway Standard Drawings" Highway Design Branch - N. C. Department of Transportation - Raleigh, N. C., Dated January, 2012 are applicable to this project and by reference hereby are considered a part of these plans:

| STD.NO. | TITLE |
|---|---|
| DIVISION 2 - EARTHWORK | |
| 200.03 | Method of Clearing - Method III |
| 225.02 | Guide for Grading Subgrade - Secondary and Local |
| 225.04 | Method of Obtaining Superelevation - Two Lane Pavement |
| DIVISION 3 - PIPE CULVERTS | |
| 300.01 | Method of Pipe Installation |
| DIVISION 4 - MAJOR STRUCTURES | |
| 422.11 | Bridge Approach Fills - Sub Regional Tier |
| DIVISION 5 - SUBGRADE, BASES AND SHOULDERS | |
| 560.01 | Method of Shoulder Construction - High Side of Superelevated Curve - Method I |
| DIVISION 6 - ASPHALT BASES AND PAVEMENTS | |
| 654.01 | Pavement Repairs |
| DIVISION 8 - INCIDENTALS | |
| 806.01 | Concrete Right-of- Way Marker |
| 806.02 | Granite Right-of-Way Marker |
| 840.00 | Concrete Base Pad for Drainage Structures |
| 840.22 | Frames and Wide Slot Sag Grates |
| 840.25 | Anchorage for Frames - Brick or Concrete or Precast |
| 840.29 | Frames and Narrow Slot Flat Grates |
| 840.35 | Traffic Bearing Grated Drop Inlet - for Cast Iron Double Frame and Grates |
| 840.46 | Traffic Bearing Precast Drainage Structure |
| 840.66 | Drainage Structure Steps |
| 846.01 | Concrete Curb, Gutter and Curb & Gutter |
| 846.04 | Drop Inlet Installation in Shoulder Berm Gutter |
| 862.01 | Guardrail Placement |
| 862.02 | Guardrail Installation |
| 876.01 | Rip Rap in Channels |
| 876.02 | Guide for Rip Rap at Pipe Outlets |

8/17/99

5/19/2017
I:\Proj\B-5739_Rdy_psh_1A.dgn
USER:ttharris

DocuSign Envelope ID: 26EBC594-B910-4B77-AED7-3FD5CB0E1816

04/06/15

| PROJECT REFERENCE NO. | SHEET NO. |
|---|---|
| B-5739 | 1B |

STATE OF NORTH CAROLINA, DIVISION OF HIGHWAYS

# CONVENTIONAL PLAN SHEET SYMBOLS

*Note: Not to Scale* **S.U.E. = Subsurface Utility Engineering*

## *BOUNDARIES AND PROPERTY:*

- State Line
- County Line
- Township Line
- City Line
- Reservation Line
- Property Line
- Existing Iron Pin — EIP
- Property Corner
- Property Monument — ECM
- Parcel/Sequence Number — 123
- Existing Fence Line
- Proposed Woven Wire Fence
- Proposed Chain Link Fence
- Proposed Barbed Wire Fence
- Existing Wetland Boundary — WLB
- Proposed Wetland Boundary — WLB
- Existing Endangered Animal Boundary — EAB
- Existing Endangered Plant Boundary — EPB
- Existing Historic Property Boundary — HPB
- Known Contamination Area: Soil
- Potential Contamination Area: Soil
- Known Contamination Area: Water
- Potential Contamination Area: Water
- Contaminated Site: Known or Potential

## *BUILDINGS AND OTHER CULTURE:*

- Gas Pump Vent or U/G Tank Cap
- Sign — S
- Well — W
- Small Mine
- Foundation
- Area Outline
- Cemetery
- Building
- School
- Church
- Dam

## *HYDROLOGY:*

- Stream or Body of Water
- Hydro, Pool or Reservoir
- Jurisdictional Stream — JS
- Buffer Zone 1 — BZ 1
- Buffer Zone 2 — BZ 2
- Flow Arrow
- Disappearing Stream
- Spring
- Wetland
- Proposed Lateral, Tail, Head Ditch — FLOW
- False Sump

## *RAILROADS:*

- Standard Gauge — CSX TRANSPORTATION
- RR Signal Milepost — MILEPOST 35
- Switch — SWITCH
- RR Abandoned
- RR Dismantled

## *RIGHT OF WAY:*

- Baseline Control Point
- Existing Right of Way Marker
- Existing Right of Way Line
- Proposed Right of Way Line — RW
- Proposed Right of Way Line with Iron Pin and Cap Marker — RW
- Proposed Right of Way Line with Concrete or Granite R/W Marker — RW
- Proposed Control of Access Line with Concrete C/A Marker — CA
- Existing Control of Access — CA
- Proposed Control of Access — CA
- Existing Easement Line — E
- Proposed Temporary Construction Easement — E
- Proposed Temporary Drainage Easement — TDE
- Proposed Permanent Drainage Easement — PDE
- Proposed Permanent Drainage / Utility Easement — DUE
- Proposed Permanent Utility Easement — PUE
- Proposed Temporary Utility Easement — TUE
- Proposed Aerial Utility Easement — AUE
- Proposed Permanent Easement with Iron Pin and Cap Marker

## *ROADS AND RELATED FEATURES:*

- Existing Edge of Pavement
- Existing Curb
- Proposed Slope Stakes Cut — C
- Proposed Slope Stakes Fill — F
- Proposed Curb Ramp — CR
- Existing Metal Guardrail
- Proposed Guardrail
- Existing Cable Guiderail
- Proposed Cable Guiderail
- Equality Symbol
- Pavement Removal

## *VEGETATION:*

- Single Tree
- Single Shrub
- Hedge
- Woods Line
- Orchard
- Vineyard — Vineyard

## *EXISTING STRUCTURES:*

MAJOR:

- Bridge, Tunnel or Box Culvert — CONC
- Bridge Wing Wall, Head Wall and End Wall — CONC WW

MINOR:

- Head and End Wall — CONC HW
- Pipe Culvert
- Footbridge
- Drainage Box: Catch Basin, DI or JB — CB
- Paved Ditch Gutter
- Storm Sewer Manhole — S
- Storm Sewer — S

## *UTILITIES:*

POWER:

- Existing Power Pole
- Proposed Power Pole
- Existing Joint Use Pole
- Proposed Joint Use Pole
- Power Manhole — P
- Power Line Tower
- Power Transformer
- U/G Power Cable Hand Hole
- H-Frame Pole
- U/G Power Line LOS B (S.U.E.*) — P
- U/G Power Line LOS C (S.U.E.*) — P
- U/G Power Line LOS D (S.U.E.*) — P

TELEPHONE:

- Existing Telephone Pole
- Proposed Telephone Pole
- Telephone Manhole — T
- Telephone Pedestal — T
- Telephone Cell Tower
- U/G Telephone Cable Hand Hole — HH
- U/G Telephone Cable LOS B (S.U.E.*) — T
- U/G Telephone Cable LOS C (S.U.E.*) — T
- U/G Telephone Cable LOS D (S.U.E.*) — T
- U/G Telephone Conduit LOS B (S.U.E.*) — TC
- U/G Telephone Conduit LOS C (S.U.E.*) — TC
- U/G Telephone Conduit LOS D (S.U.E.*) — TC
- U/G Fiber Optics Cable LOS B (S.U.E.*) — T FO
- U/G Fiber Optics Cable LOS C (S.U.E.*) — T FO
- U/G Fiber Optics Cable LOS D (S.U.E.*) — T FO

WATER:

- Water Manhole — W
- Water Meter
- Water Valve
- Water Hydrant
- U/G Water Line LOS B (S.U.E*)
- U/G Water Line LOS C (S.U.E*)
- U/G Water Line LOS D (S.U.E*)
- Above Ground Water Line — A/G Water

TV:

- TV Pedestal — C
- TV Tower
- U/G TV Cable Hand Hole — HH
- U/G TV Cable LOS B (S.U.E.*) — TV
- U/G TV Cable LOS C (S.U.E.*) — TV
- U/G TV Cable LOS D (S.U.E.*) — TV
- U/G Fiber Optic Cable LOS B (S.U.E.*) — TV FO
- U/G Fiber Optic Cable LOS C (S.U.E.*) — TV FO
- U/G Fiber Optic Cable LOS D (S.U.E.*) — TV FO

GAS:

- Gas Valve
- Gas Meter
- U/G Gas Line LOS B (S.U.E.*) — G
- U/G Gas Line LOS C (S.U.E.*) — G
- U/G Gas Line LOS D (S.U.E.*) — G
- Above Ground Gas Line — A/G Gas

SANITARY SEWER:

- Sanitary Sewer Manhole
- Sanitary Sewer Cleanout
- U/G Sanitary Sewer Line — SS
- Above Ground Sanitary Sewer — A/G Sanitary Sewer
- SS Forced Main Line LOS B (S.U.E.*) — FSS
- SS Forced Main Line LOS C (S.U.E.*) — FSS
- SS Forced Main Line LOS D (S.U.E.*) — FSS

MISCELLANEOUS:

- Utility Pole
- Utility Pole with Base
- Utility Located Object
- Utility Traffic Signal Box — S
- Utility Unknown U/G Line LOS B (S.U.E.*) — ?UTL
- U/G Tank; Water, Gas, Oil
- Underground Storage Tank, Approx. Loc. — UST
- A/G Tank; Water, Gas, Oil
- Geoenvironmental Boring
- U/G Test Hole LOS A (S.U.E.*)
- Abandoned According to Utility Records — AATUR
- End of Information — E.O.I.

DocuSign Envelope ID: 26EBC594-B910-4B77-AED7-3FD5CB0E1816

| PROJECT REFERENCE NO. | SHEET NO. |
|---|---|
| B-5739 | 1C-1 |
| Location and Surveys | |

ALIGNMENT AND ROW CONTROL POINT
TABLES PROVIDED BY NCDOT LOCATION AND SURVEYS

# SURVEY CONTROL SHEET B-5739

Prepared in the Office of:
SEPI ENGINEERING & CONSTRUCTION
1025 Wade Avenue
Raleigh, NC 27605
Tel:919-789-9977
Fax:919-789-9591
License: C-2197

L

| TYPE | STATION | NORTH | EAST |
|---|---|---|---|
| PC | 10+00.00 | 721528.2108 | 1809431.8076 |
| PT | 11+87.20 | 721530.4238 | 1809618.9830 |
| PC | 14+58.51 | 721539.1447 | 1809890.1555 |
| PCC | 15+70.11 | 721538.4087 | 1810001.7207 |
| PCC | 17+64.77 | 721510.4158 | 1810194.0362 |
| PT | 18+43.44 | 721489.8084 | 1810269.9481 |

ROW MARKER REBAR

| ALIGN | STATION | OFFSET | NORTH | EAST |
|---|---|---|---|---|
| L | 13+55.00 | -22.50 | 721558.30578 | 1809785.97165 |
| L | 13+55.00 | -45.00 | 721580.79415 | 1809785.24842 |
| L | 14+58.51 | -45.00 | 721584.12131 | 1809888.70494 |
| L | 14+80.00 | -45.00 | 721584.66842 | 1809910.85937 |
| L | 14+80.00 | -22.50 | 721562.17176 | 1809911.24700 |
| L | 13+55.00 | 22.50 | 721513.32903 | 1809787.41810 |
| L | 13+55.00 | 52.00 | 721483.84428 | 1809788.36632 |
| L | 14+58.51 | 52.00 | 721487.17143 | 1809891.82284 |
| L | 15+60.00 | 52.00 | 721486.86963 | 1809989.62758 |
| L | 15+95.00 | 22.50 | 721514.52141 | 1810024.97879 |

PERMANENT EASEMENT REBAR

| ALIGN | STATION | OFFSET | NORTH | EAST |
|---|---|---|---|---|
| L | 12+68.00 | -35.00 | 721568.00285 | 1809698.61481 |
| L | 12+28.00 | -22.50 | 721554.22358 | 1809659.03727 |
| L | 13+55.00 | -35.00 | 721570.79932 | 1809785.56986 |
| L | 12+49.00 | 22.50 | 721509.92184 | 1809681.47287 |
| L | 12+78.00 | 52.00 | 721481.36924 | 1809711.40611 |
| L | 14+62.00 | -50.00 | 721589.23043 | 1809892.15352 |
| L | 14+80.00 | -60.00 | 721599.66619 | 1809910.60095 |

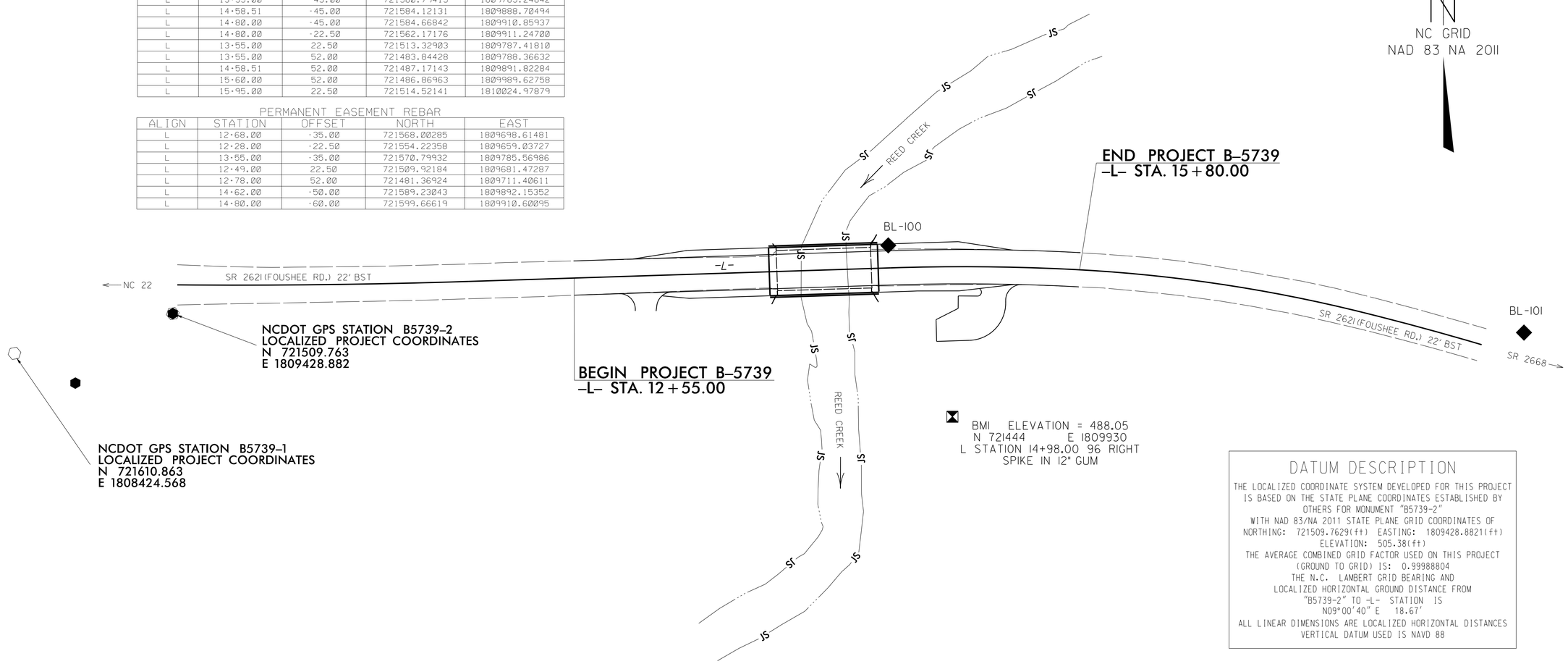


## DATUM DESCRIPTION

THE LOCALIZED COORDINATE SYSTEM DEVELOPED FOR THIS PROJECT IS BASED ON THE STATE PLANE COORDINATES ESTABLISHED BY OTHERS FOR MONUMENT "B5739-2"
WITH NAD 83/NA 2011 STATE PLANE GRID COORDINATES OF
NORTHING: 721509.7629(ft) EASTING: 1809428.8821(ft)
ELEVATION: 505.38(ft)
THE AVERAGE COMBINED GRID FACTOR USED ON THIS PROJECT (GROUND TO GRID) IS: 0.99988804
THE N.C. LAMBERT GRID BEARING AND LOCALIZED HORIZONTAL GROUND DISTANCE FROM "B5739-2" TO -L- STATION IS
N09°00'40" E 18.67'
ALL LINEAR DIMENSIONS ARE LOCALIZED HORIZONTAL DISTANCES
VERTICAL DATUM USED IS NAVD 88

BL

| POINT | DESC. | NORTH | EAST | ELEVATION | L STATION | OFFSET |
|---|---|---|---|---|---|---|
| 1 | B5739-1 | 721610.8632 | 1808424.5680 | 523.20 | OUTSIDE PROJECT LIMITS | |
| 2 | B7539-2 | 721509.7629 | 1809428.8821 | 505.38 | OUTSIDE PROJECT LIMITS | |
| 100 | BL-100 | 721553.5346 | 1809888.6210 | 485.17 | 14+57.44 | 14.43 LT |
| 101 | BL-101 | 721497.5507 | 1810297.1228 | 501.38 | OUTSIDE PROJECT LIMITS | |

.....
BM1 ELEVATION = 488.05
N 721444 E 1809930
L STATION 14+98.00 96 RIGHT
SPIKE IN 12"GUM
.....

NOTE: DRAWING NOT TO SCALE

## NOTES:

1. THE CONTROL DATA FOR THIS PROJECT WAS PROVIDED BY SEPI ENGINEERING & CONSTRUCTION.

SITE CALIBRATION INFORMATION HAS NOT BEEN PROVIDED FOR THIS PROJECT. IF FURTHER INFORMATION IS NEEDED, PLEASE CONTACT THE LOCATION AND SURVEYS UNIT.

○ INDICATES GEODETIC CONTROL MONUMENTS USED OR SET FOR HORIZONTAL PROJECT CONTROL BY THE NCDOT LOCATION AND SURVEYS UNIT.

PROJECT CONTROL ESTABLISHED USING GLOBAL POSITIONING SYSTEM.

DocuSign Envelope ID: 26EBC594-B910-4B77-AED7-3FD5CB0E1816

8/17/99

REVISIONS

SEPI ENGINEERING & CONSTRUCTION
1025 Wade Avenue
Raleigh, NC 27605
Tel:919-789-9977
Fax:919-789-9591
License: C-2197

| PROJECT REFERENCE NO. | SHEET NO. |
|---|---|
| B-5739 | 2A-1 |
| R/W SHEET NO. | |
| ROADWAY DESIGN ENGINEER | PAVEMENT DESIGN ENGINEER |

**DOCUMENT NOT CONSIDERED FINAL UNLESS ALL SIGNATURES COMPLETED**

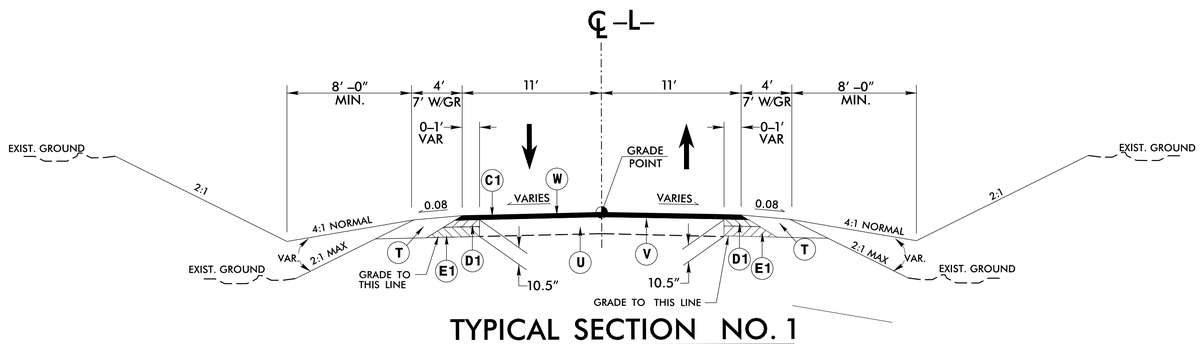


## TYPICAL SECTION NO. 1

–L– STA. 12+55.00 TO –L– STA. 13+00.00
–L– STA. 15+25.00 TO –L– STA. 15+80.00

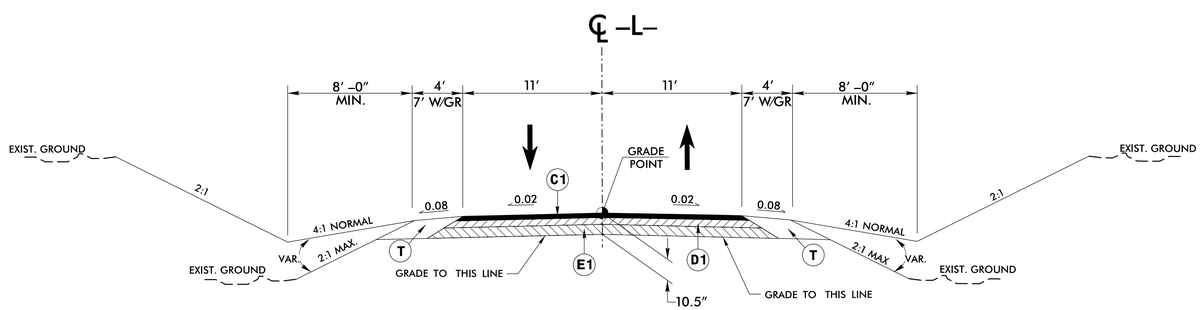


## TYPICAL SECTION NO. 2

–L– STA. 13+00.00 TO –L– STA. 13+79.38 (BEGIN BRIDGE)
–L– STA. 14+51.63 (END BRIDGE) TO –L– STA. 15+25.00

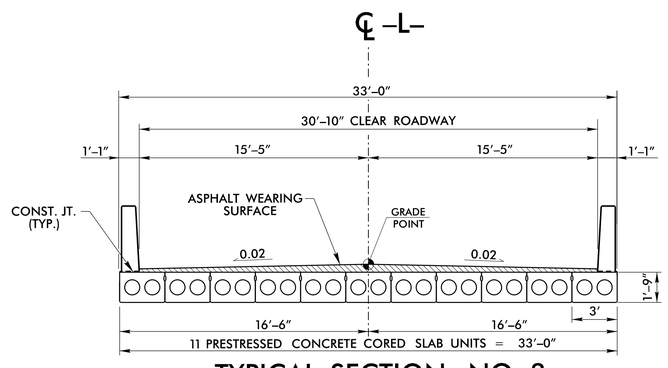


## TYPICAL SECTION NO. 3

–L– STA. 13+79.38 TO –L– STA. 14+51.63

## PAVEMENT SCHEDULE

| | |
|---|---|
| C1 | PROP. APPROX. 2″ ASPHALT CONCRETE SURFACE COURSE, TYPE SF9.5A, AT AN AVERAGE RATE OF 110 LBS. PER SQ. YD. IN EACH OF TWO LAYERS. |
| C2 | PROP. VAR. DEPTH ASPHALT CONCRETE SURFACE COURSE, TYPE SF9.5A, AT AN AVERAGE RATE OF 110 LBS. PER SQ. YD. PER 1″ DEPTH TO BE PLACED IN LAYERS NOT TO EXCEED 1.5″ IN DEPTH. |
| D1 | PROP. APPROX. 3.0″ ASPHALT CONCRETE BASE COURSE, TYPE I19.0B, AT AN AVERAGE RATE OF 342 LBS. PER SQ. YD. |
| D2 | PROP. VAR. DEPTH ASPHALT CONCRETE BASE COURSE, TYPE I19.0B, AT AN AVERAGE RATE OF 114 LBS. PER SQ. YD. PER 1″ DEPTH TO BE PLACED IN LAYERS NOT GREATER THAN 4.0″ IN DEPTH OR LESS THAN 2.5″ IN DEPTH. |
| E1 | PROP. APPROX. 5.5″ ASPHALT CONCRETE BASE COURSE, TYPE B25.0B, AT AN AVERAGE RATE OF 627 LBS. PER SQ. YD. |
| E2 | PROP. VAR. DEPTH ASPHALT CONCRETE BASE COURSE, TYPE B25.0B, AT AN AVERAGE RATE OF 114 LBS. PER SQ. YD. PER 1″ DEPTH TO BE PLACED IN LAYERS NOT GREATER THAN 5.5″ IN DEPTH OR LESS THAN 3.0″ IN DEPTH. |
| J | 6″ AGGREGATE BASE COURSE. |
| T | EARTH MATERIAL. |
| U | EXISTING PAVEMENT. |
| V | 0″-2″ VARIABLE MILLING. |
| W | WEDGING. |

NOTE: PAVEMENT EDGE SLOPES ARE 1:1 UNLESS SHOWN OTHERWISE

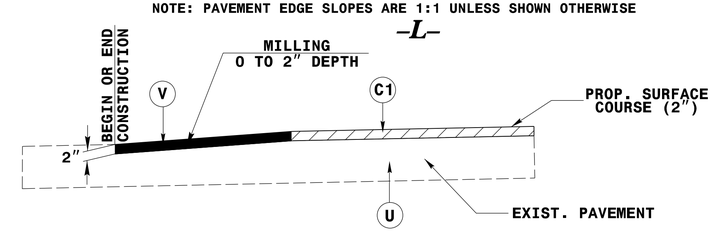


| LINE | FROM | TO |
|---|---|---|
| –L– | 12+55.00 | 13+00.00 |
| –L– | 15+30.00 | 15+80.00 |

NOTE: MIRROR FOR END OF CONSTRUCTION

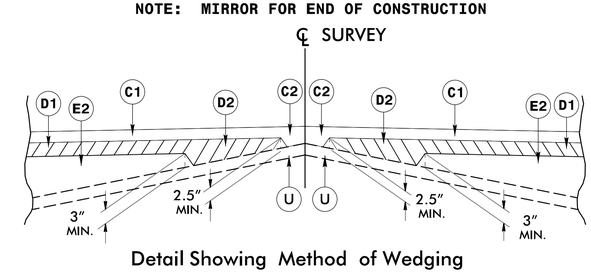


Detail Showing Method of Wedging

5/19/2017
...Proj\B-5739_Rdy_typ_2A-1.dgn
ISE-Bridge-ris

DocuSign Envelope ID: 26EBC594-B910-4B77-AED7-3FD0CB9E1B16

$$$$$$SYSTIME$$$$$
$$$$$$$$$$$$$$$$DGN$$$$$$$$$$$$$$$
$$$$USERNAME$$$$

STATE OF NORTH CAROLINA
DEPT. OF TRANSPORTATION
DIVISION OF HIGHWAYS
RALEIGH, N.C.

ENGLISH DETAIL DRAWING FOR
**STRUCTURE ANCHOR UNITS**
GUARDRAIL ANCHOR UNIT, TYPE III FOR ATTACHMENT TO RAIL ON BRIDGE - SUB REGIONAL TIER

SHEET 2 OF 7
**862d03**

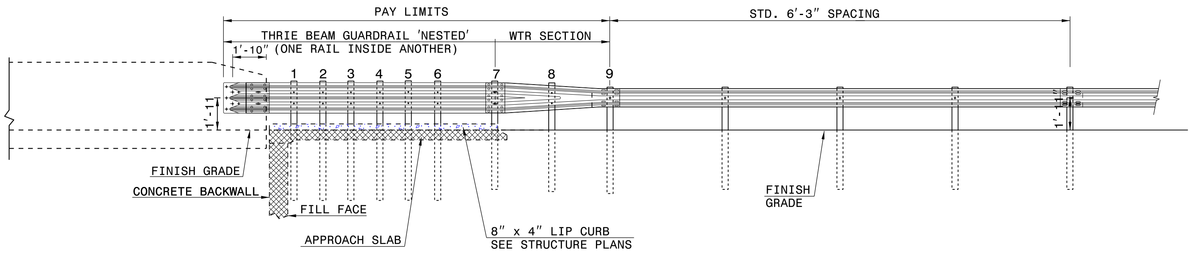


**ELEVATION**

NOTE:
**POST NOT REQUIRED FOR SKEW ANGLES GREATER THAN 150° OR LESS THAN 30° UNLESS OTHERWISE DIRECTED BY THE ENGINEER.
*THE DISTANCE FROM END OF BRIDGE RAIL TO CENTER LINE OF THE FIRST POST SHOULD BE 11½" IF CONCRETE BACKWALL IS NOT PRESENT.
-SHOULDER BERM GUTTER MUST BE INSTALLED TO THE LIMITS 8" x 4" LIP CURB IS SHOWN IF ANCHOR UNIT IS NOT ADJACENT TO AN APPROACH SLAB.
-MEASURE GUARDRAIL HEIGHT FROM THE TOP OF ADJACENT SURFACE (SHOULDER, BERM, OR GUTTER).
-LAP JOINTS IN THE DIRECTION OF TRAFFIC FLOW.
-SEE SHEET 3 FOR POST SECTIONS 1 THRU 9.

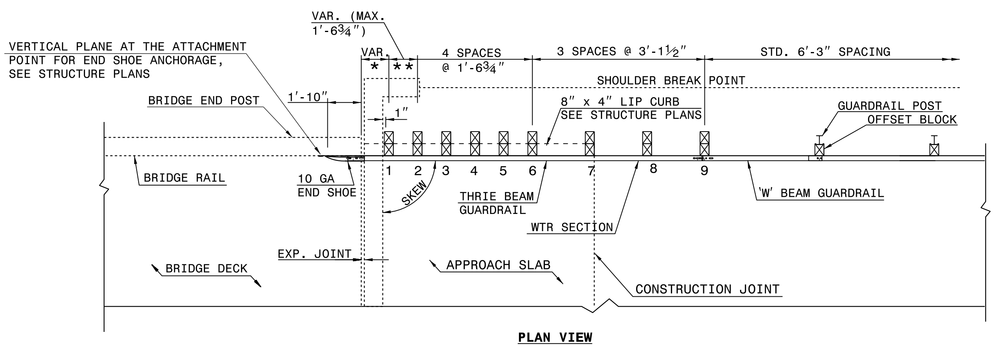


**PLAN VIEW**

## GUARDRAIL ANCHOR UNIT, TYPE III FOR ATTACHMENT TO RAIL ON BRIDGE - SUB REGIONAL TIER

STATE OF NORTH CAROLINA
DEPT. OF TRANSPORTATION
DIVISION OF HIGHWAYS
RALEIGH, N.C.

ENGLISH DETAIL DRAWING FOR
**STRUCTURE ANCHOR UNITS**
GUARDRAIL ANCHOR UNIT, TYPE III FOR ATTACHMENT TO RAIL ON BRIDGE - SUB REGIONAL TIER

SHEET 2 OF 7
862d03

STATE OF NORTH CAROLINA
DEPT. OF TRANSPORTATION
DIVISION OF HIGHWAYS
RALEIGH, N.C.

ENGLISH DETAIL DRAWING FOR
**STRUCTURE ANCHOR UNITS**
GUARDRAIL ANCHOR UNIT, TYPE III

SHEET 3 OF 7
**862d03**

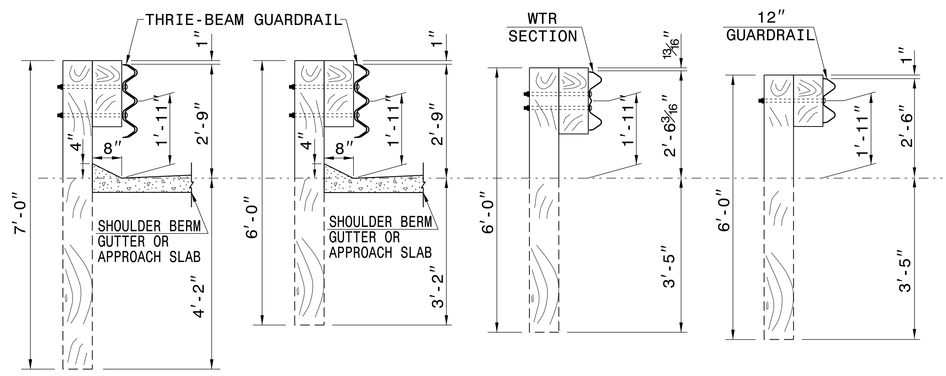


**SECTION OF THRIE BEAM POSTS 1 THRU 6** | **SECTION OF THRIE BEAM POST 7** | **SECTION OF WTR BEAM POST 8** | **SECTION OF 'W' BEAM POST 9**

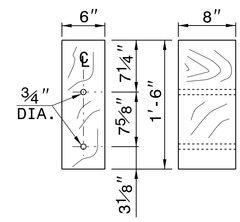


**THRIE BEAM OFFSET BLOCK**

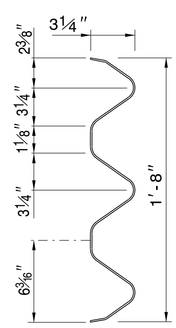


**THRIE-BEAM SECTION**

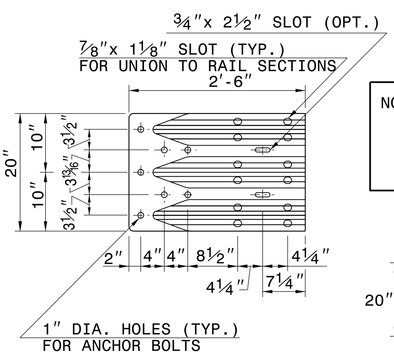


**END SHOE**

NOTE: THE MID POST AND OFFSET BLOCK OF THE WTR SECTION WILL REQUIRE SPECIAL BOLT HOLE DRILLING IN THE THRIE BEAM OFFSET BLOCK AND LINE POST.

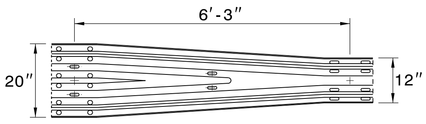


**WTR SECTION**
ELEVATION VIEW

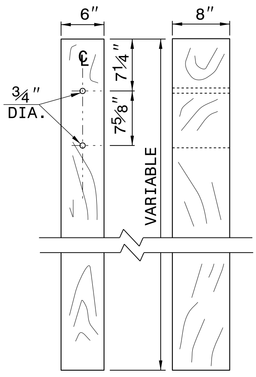


**THRIE BEAM LINE POST**

SHEET 3 OF 7
862d03

**CONTRACT STANDARDS AND DEVELOPMENT UNIT**
Office 919-707-6950 FAX 919-250-4119

DOCUMENT NOT CONSIDERED FINAL UNLESS ALL SIGNATURES COMPLETED

5/19/2017
NORTH CAROLINA PROFESSIONAL SEAL 022966 ENGINEER
DocuSigned by: Jay Howerton
DocuSign Envelope ID: 26EBC594-B910-4B77-AED7-3FD0CB9E1B16

# SEE TITLE BLOCK

ORIGINAL BY: J. HOWERTON DATE: 06-22-12
MODIFIED BY: DATE:
MODIFIED BY: DATE:
FILE SPEC.:

PROJECT REFERENCE NO. B-5729
SHEET NO. 2C-1

DocuSign Envelope ID: 26EBC594-B910-4B77-AED7-3FD5CB0E1816

12/06/07

| COMPUTED BY: DWG | DATE: 10/7/16 |
|---|---|
| CHECKED BY: DB | DATE: 10/25/16 |

| PROJECT REFERENCE NO. | SHEET NO. |
|---|---|
| B-5739 | 3B-1 |

STATE OF NORTH CAROLINA
DIVISION OF HIGHWAYS

# SUMMARY OF EARTHWORK

IN CUBIC YARDS

| STATION | STATION | UNCL. EXCAV. | EMBANK. +% | BORROW | WASTE |
|---|---|---|---|---|---|
| SUMMARY NO. 1 | | | | | |
| –L– 12+55.00 | –L– 13+79.38 (BB) | 26 | 187 | 161 | |
| TOTAL SUMMARY NO. 1 | | 26 | 187 | 161 | |
| SUMMARY NO. 2 | | | | | |
| –L– 14+51.63 (EB) | –L– 15+80.00 | 95 | 136 | 41 | |
| TOTAL SUMMARY NO. 2 | | 95 | 136 | 41 | |
| SUMMARY TOTALS | | 121 | 323 | 202 | |
| EST. SHOULDER MATERIAL | | | 58 | 58 | |
| PROJECT TOTALS | | 121 | 381 | 260 | |
| EST. 5% TO REPLACE TOPSOIL ON BORROW PIT | | | | 13 | |
| GRAND TOTALS | | 121 | 381 | 273 | |
| SAY | | 150 | | 300 | |

Earthwork quantities are calculated by the Roadway Design Unit. These earthwork quantities are based in part on subsurface data provided by the Geotechnical Engineering Unit.

Note: Approximate quantities only. Unclassified Excavation, Fine Grading, Clearing and Grubbing, and Removal of Existing Pavement will be paid for at the contract lump sum price for "Grading."

# REMOVAL OF ASPHALT PAVEMENT SUMMARY

| SURVEY LINE | STATION | STATION | LOCATION LT/RT/CL | YD² |
|---|---|---|---|---|
| –L– | 13+00.00 | 13+85.39 | LT/RT | 198.86 |
| –L– | 14+46.07 | 15+25.00 | LT/RT | 203.12 |
| | | | TOTAL: | 401.98 |
| | | | SAY: | 450.00 |

# SHOULDER BERM GUTTER SUMMARY

| SURVEY LINE | STATION | STATION | LENGTH |
|---|---|---|---|
| –L– LT. | 14+62.50 | 14+69.00 | 6.50 |
| –L– RT. | 14+62.50 | 14+69.00 | 6.50 |
| | | TOTAL: | 13.00 |
| | | SAY: | 15.00 |

NOTE: Invert Elevations are for Bid Purposes only and shall not be used for project construction stakeout. See "Standard Specifications For Roads and Structures, Section 300–5".

# SUB–REGIONAL
# LIST OF PIPES, ENDWALLS, ETC. (FOR PIPES 48" & UNDER)

Column groups: DRAINAGE PIPE (RCP, CSP, CAAP, HDPE, or PVC) 12" 15" 18" 24" 30" 36" 42" 48" — DO NOT USE RCP / DO NOT USE CSP / DO NOT USE CAAP / DO NOT USE HDPE; C.S. PIPE 12" 15" 18" 24" 36" 42" 48" (.064 .064 .064 .064 .079 .109 .109); R.C. PIPE (CLASS III) 15" 18" 24" 30" 36" 42" 48"; R.C. PIPE (CLASS IV) 12" 15" 18" 24" 30" 36" 42" 48"; 15" SIDE DRAIN PIPE; 18" SIDE DRAIN PIPE; ENDWALLS STD. 838.01, STD. 838.11 OR STD. 838.80 (UNLESS NOTED OTHERWISE) CU. YDS. R.C.P. / C.S.P.; QUANTITIES FOR DRAINAGE STRUCTURES * TOTAL L.F. FOR PAY QUANTITY SHALL BE COL. 'A' + (1.3 X COL.'B') PER EACH (0' THRU 5.0') / LIN. *FT. A 5.0' THRU 10.0' / B 10.0' AND ABOVE; C.B. STD. 840.01 OR STD. 840.02; FRAME, GRATES AND HOOD STANDARD 840.03 TYPE OF GRATE E F G; CONCRETE TRANSITIONAL SECTION CATCH BASIN / DROP INLET; T.B.D.I. STD. 840.35; G.D.I. (N.S.) FRAME WITH TWO GRATES STD. 840.29; G.D.I. FRAME WITH TWO GRATES STD. 840.22; DRAINAGE PIPE ELBOWS NO. & SIZE; PIPE REMOVAL LIN.FT.; REMARKS.

| STATION | LOCATION (LT,RT, OR CL) | STRUCTURE NO. FROM | TO | TOP ELEVATION | INVERT ELEVATION | INVERT ELEVATION | SLOPE CRITICAL | DRAINAGE PIPE 15" | DO NOT USE RCP | R.C. PIPE (CLASS IV) 15" | R.C. PIPE (CLASS IV) 24" | PER EACH (0' THRU 5.0') | T.B.D.I. STD. 840.35 | G.D.I. (N.S.) FRAME WITH TWO GRATES STD. 840.29 | G.D.I. FRAME WITH TWO GRATES STD. 840.22 | DRAINAGE PIPE ELBOWS NO. & SIZE | PIPE REMOVAL LIN.FT. | REMARKS |
|---|---|---|---|---|---|---|---|---|---|---|---|---|---|---|---|---|---|---|
| –L– 12+65.00 | LT | 0406 | | 492.09 | | | | | | | | 1 | 1 | | 1 | | | |
| | | 0406 | 0407 | | 489.34 | 487.52 | | | | 44 | | | | | | | | |
| –L– 12+86.00 | RT | 0407 | | 491.52 | | | | | | | | 1 | 1 | | 1 | | | |
| | | 0407 | 0408 | | 487.52 | 479.45 | | | | 108 | | | | | | | | |
| –L– 14+71.00 | RT | 0403 | | 487.66 | | | | | | | | 1 | 1 | 1 | | | | |
| | | 0403 | 0402 | | 484.66 | 482.81 | | | | 32 | | | | | | | | |
| –L– 14+71.00 | LT | 0402 | | 487.81 | | | | | | | | 1 | 1 | 1 | | | | |
| | | 0402 | 0401 | | 482.81 | 480.00 | | 28 | X | | | | | | | 2–15" | | |
| –L– 15+34.00 | RT | 0410 | OUT | | 485.50 | 480.75 | | | | | 68 | | | | | | | |
| –L– 13+00.00 | RT | | | | | | | | | | | | | | | | 24 | REMOVE 15" HDPE |
| TOTALS | | | | | | | | 28 | | 184 | 68 | 4 | 4 | 2 | 2 | 2–15" | 24 | |

ABBREVIATIONS

- C.B. CATCH BASIN
- N.D.I. NARROW DROP INLET
- D.I. DROP INLET
- G.D.I. GRATED DROP INLET
- G.D.I. (N.S.) GRATED DROP INLET (NARROW SLOT)
- J.B. JUNCTION BOX
- M.H. MANHOLE
- T.B.D.I. TRAFFIC BEARING DROP INLET
- T.B.J.B. TRAFFIC BEARING JUNCTION BOX

"N" = DISTANCE FROM EDGE OF LANE TO FACE OF GUARDRAIL.
TOTAL SHOULDER WIDTH = DISTANCE FROM EDGE OF TRAVEL LANE TO SHOULDER BREAK POINT.
FLARE LENGTH = DISTANCE FROM LAST SECTION OF PARALLEL GUARDRAIL TO END OF GUARDRAIL.
W = TOTAL WIDTH OF FLARE FROM BEGINNING OF TAPER TO END OF GUARDRAIL.
G = GATING IMPACT ATTENUATOR TYPE 350
NG = NON–GATING IMPACT ATTENUATOR TYPE 350

# GUARDRAIL SUMMARY

| SURVEY LINE | BEG. STA. | END STA. | LOCATION | LENGTH STRAIGHT | LENGTH SHOP CURVED | LENGTH DOUBLE FACED | WARRANT POINT APPROACH END | WARRANT POINT TRAILING END | "N" DIST. FROM E.O.L. | TOTAL SHOUL. WIDTH | FLARE LENGTH APPROACH END | FLARE LENGTH TRAILING END | W APPROACH END | W TRAILING END | ANCHORS TYPE III | ANCHORS GRAU 350 TL-2 | IMPACT ATTENUATOR TYPE 350 EA | G | NG | SINGLE FACED GUARDRAIL | REMOVE EXISTING GUARDRAIL | REMOVE AND STOCKPILE EXISTING GUARDRAIL | REMARKS |
|---|---|---|---|---|---|---|---|---|---|---|---|---|---|---|---|---|---|---|---|---|---|---|---|
| –L– | 13+29.38 | 13+79.38 | LT. | 50 | | | | 13+79.38 | 4.42' | 7' | | | | | 1 | 1 | | | | | | | |
| –L– | 13+29.38 | 13+79.38 | RT. | 50 | | | 13+79.38 | | 4.42' | 7' | | | | | 1 | 1 | | | | | | | |
| –L– | 14+51.63 | 15+01.63 | LT. | 50 | | | 14+51.63 | | 4.42' | 7' | | | | | 1 | 1 | | | | | | | |
| –L– | 14+51.63 | 15+01.63 | RT. | 50 | | | | 14+51.63 | 4.42' | 7' | | | | | 1 | 1 | | | | | | | |
| | | | TOTALS | 200 | | | | | | | | | | | 4 | 4 | | | | | | | |
| | | LESS DEDUCTION FOR ANCHORS | | | | | | | | | | | | | | | | | | | | | |
| | | GRAU–350 TL–2 4 @ 25' = | | –100 | | | | | | | | | | | | | | | | | | | |
| | | TYPE III 4 @ 18.75' = | | –75 | | | | | | | | | | | | | | | | | | | |
| | | | PROJECT TOTALS | 25 | | | | | | | | | | | 4 | 4 | | | | | | | |
| ADDITIONAL GUARDRAIL POSTS = 5 EA. | | | SAY | 50 | | | | | | | | | | | | | | | | | | | |

5/19/2017
...\Proj\B-5739_Rdy_sum_3B-1.dgn

DocuSign Envelope ID: 26EBC594-B910-4B77-AED7-3FD5CB0E1816

SEPI ENGINEERING & CONSTRUCTION
1025 Wade Avenue
Raleigh, NC 27605
Tel:919-789-9977
Fax:919-789-9591
License: C-2197

| PROJECT REFERENCE NO. | SHEET NO. |
|---|---|
| B-5739 | 4 |
| R/W SHEET NO. | |

ROADWAY DESIGN ENGINEER
5/19/2017
NORTH CAROLINA PROFESSIONAL SEAL 32606 ENGINEER BENJAMIN R. CRAWFORD
DocuSigned by: Benjamin R. Crawford
DD1AEA1C98CD47F...

HYDRAULICS ENGINEER
5/19/2017
NORTH CAROLINA PROFESSIONAL SEAL 33719 ENGINEER BRIAN A. MAZZECHI
DocuSigned by: Brian Mazzechi
DE5DC6B86DF44A...

**DOCUMENT NOT CONSIDERED FINAL UNLESS ALL SIGNATURES COMPLETED**

| -L- | | |
|---|---|---|
| PI Sta 10+93.61 | PI Sta 15+14.34 | PI Sta 16+67.76 |
| Δ = 2° 19' 45.3" (LT) | Δ = 4° 26' 23.9" (RT) | Δ = 11° 22' 02.3" (RT) |
| D = 1° 14' 39.3" | D = 3° 58' 43.1" | D = 5° 50' 22.3" |
| L = 187.20' | L = 111.60' | L = 194.66' |
| T = 93.61' | T = 55.83' | T = 97.65' |
| R = 4,604.86' | R = 1,440.09' | R = 981.17' |
| | SE = SEE PLANS | |

| -DRV- | |
|---|---|
| PI Sta 10+40.55 | PI Sta 10+75.13 |
| Δ = 87° 37' 59.8" (RT) | Δ = 90° 00' 00.0" (RT) |
| D = 381° 58' 18.7" | D = 57.2° 57' 28.1" |
| L = 22.94' | L = 15.71' |
| T = 14.39' | T = 10.00' |
| R = 15.00' | R = 10.00' |
| SE = SEE PLANS | SE = SEE PLANS |

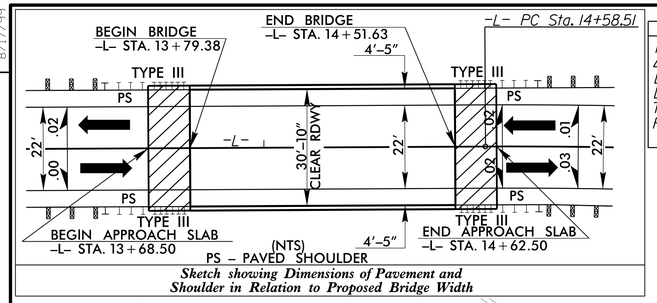


*Sketch showing Dimensions of Pavement and Shoulder in Relation to Proposed Bridge Width*

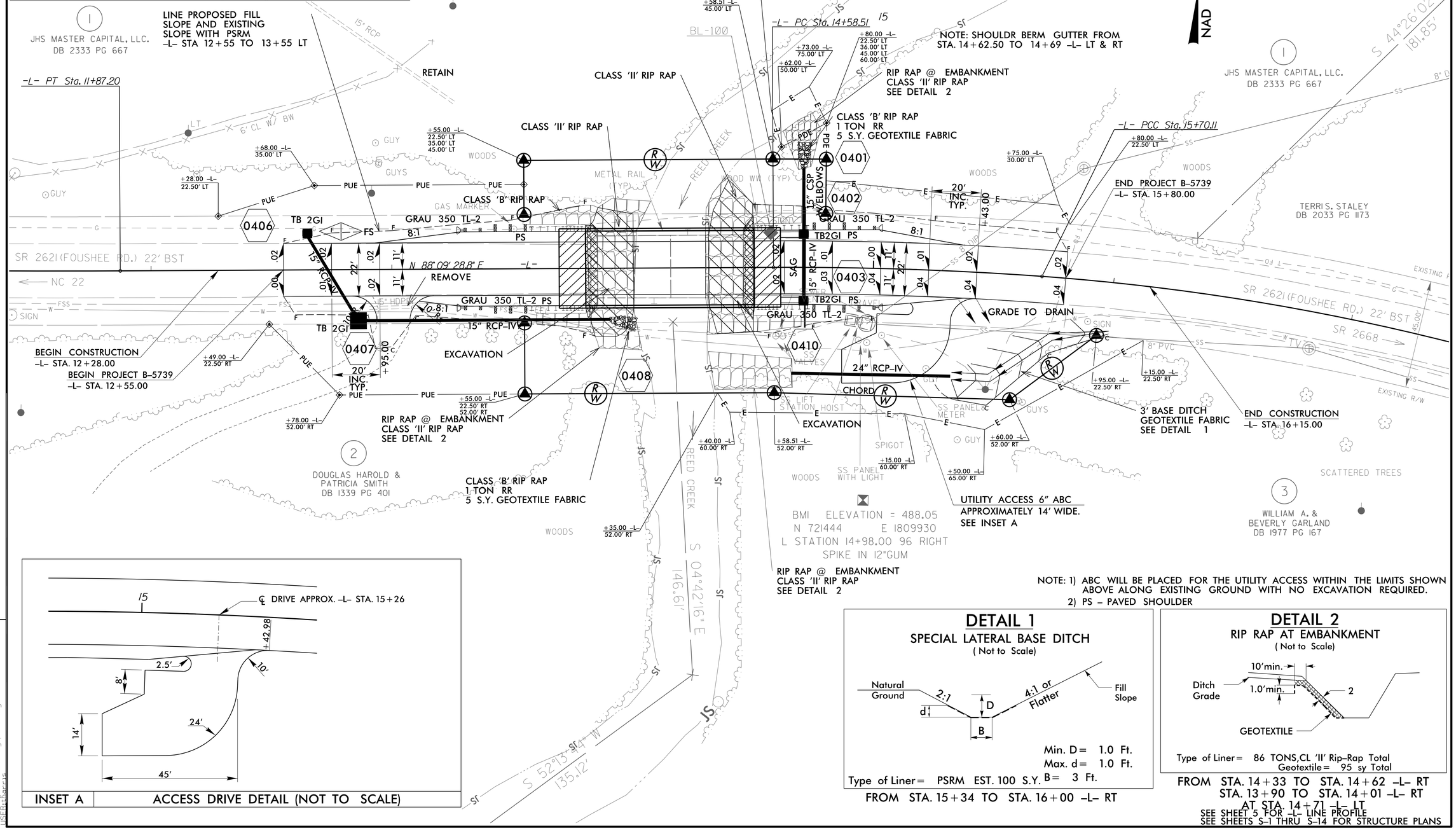


NOTE: 1) ABC WILL BE PLACED FOR THE UTILITY ACCESS WITHIN THE LIMITS SHOWN ABOVE ALONG EXISTING GROUND WITH NO EXCAVATION REQUIRED.
2) PS - PAVED SHOULDER




INSET A | ACCESS DRIVE DETAIL (NOT TO SCALE)

## DETAIL 1
SPECIAL LATERAL BASE DITCH
( Not to Scale)




Min. D = 1.0 Ft.
Max. d = 1.0 Ft.
B = 3 Ft.
Type of Liner = PSRM EST. 100 S.Y.

FROM STA. 15+34 TO STA. 16+00 -L- RT

## DETAIL 2
RIP RAP AT EMBANKMENT
( Not to Scale)




Type of Liner = 86 TONS,CL 'II' Rip-Rap Total
Geotextile = 95 sy Total

FROM STA. 14+33 TO STA. 14+62 -L- RT
STA. 13+90 TO STA. 14+01 -L- RT
AT STA. 14+71 -L- LT
SEE SHEET 5 FOR -L- LINE PROFILE
SEE SHEETS S-1 THRU S-14 FOR STRUCTURE PLANS

REVISIONS
8/17/99

5/19/2017
B-5739_Rdy_psh_4.dgn
JSFRANKLIN

DocuSign Envelope ID: 26EBC594-B910-4B77-AED7-3FD5CB0E1816

5/28/99

## BRIDGE HYDRAULIC DATA

| | | |
|---|---|---|
| DESIGN DISCHARGE | = 1900 | CFS |
| DESIGN FREQUENCY | = 25 | YRS |
| DESIGN HW ELEVATION | = 481.20 | FT |
| BASE DISCHARGE | = 2860 | CFS |
| BASE FREQUENCY | = 100 | YRS |
| BASE HW ELEVATION | = 482.50 | FT |
| OVERTOPPING DISCHARGE | = >3700 | CFS |
| OVERTOPPING FREQUENCY | = 500+ | YRS |
| OVERTOPPING ELEVATION | = 488.0 | FT |
| DATE OF SURVEY | = 08/14/2013 | |
| W.S.ELEVATION AT DATE OF SURVEY | = 473.40 | FT |

# -L-

| PROJECT REFERENCE NO. | SHEET NO. |
|---|---|
| B-5739 | 5 |

ROADWAY DESIGN ENGINEER
5/19/2014
NORTH CAROLINA PROFESSIONAL SEAL 32606 ENGINEER BENJAMIN R. CRAWFORD
DocuSigned by: Benjamin R. Crawford
DD1AEA7C98C047E...

HYDRAULICS ENGINEER
5/19/2014
NORTH CAROLINA PROFESSIONAL SEAL 33719 ENGINEER BRIAN A. MAZZOCCHI
DocuSigned by: Brian Mazzocchi
DEE5C6B8B6E44A...

**DOCUMENT NOT CONSIDERED FINAL UNLESS ALL SIGNATURES COMPLETED**

SEPI ENGINEERING & CONSTRUCTION
1025 Wade Avenue
Raleigh, NC 27605
Tel:919-789-9977
Fax:919-789-9591
License: C-2197

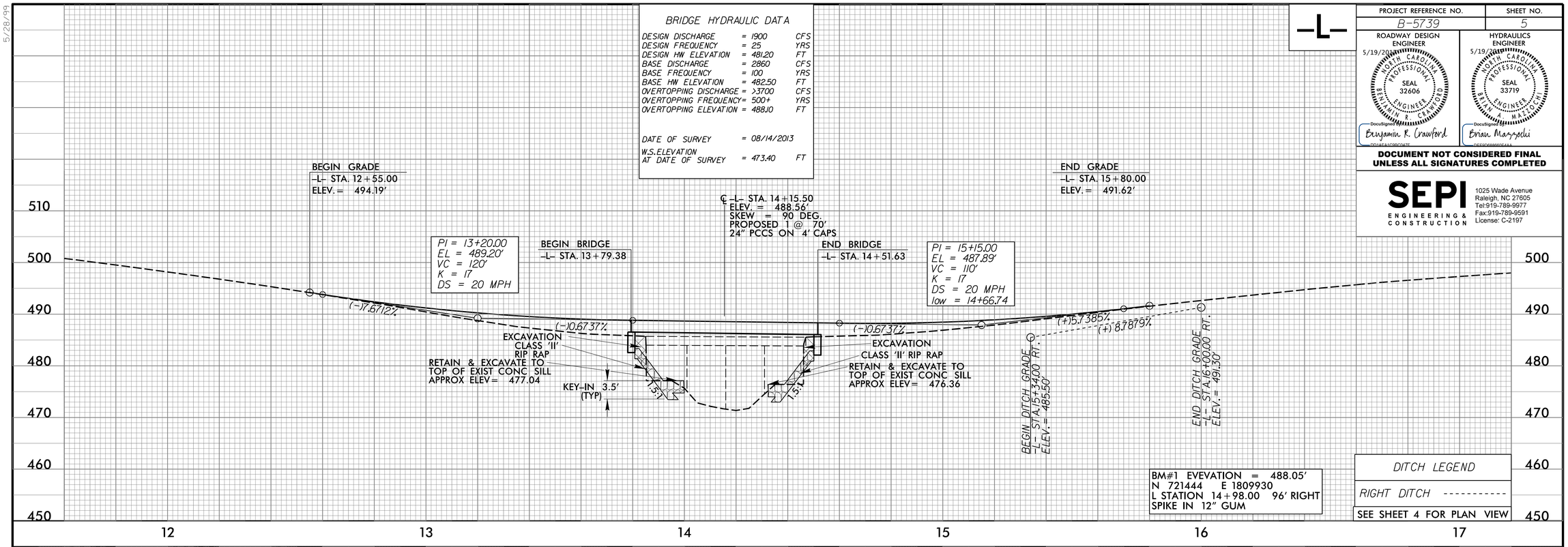


BM#1 EVEVATION = 488.05'
N 721444 E 1809930
L STATION 14+98.00 96' RIGHT
SPIKE IN 12" GUM

DITCH LEGEND

RIGHT DITCH ----------

SEE SHEET 4 FOR PLAN VIEW

5/19/2014
jts:R:\Proj\B-5739_Rdg_psh_5.dgn
jts:R:\Proj\

DocuSign Envelope ID: C7678A40-113B-4BA5-A278-6ABC6112DDB4

# STATE OF NORTH CAROLINA
# DIVISION OF HIGHWAYS

# *TRANSPORTATION MANAGEMENT PLAN*

# *RANDOLPH COUNTY*

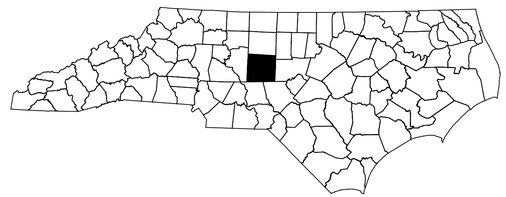

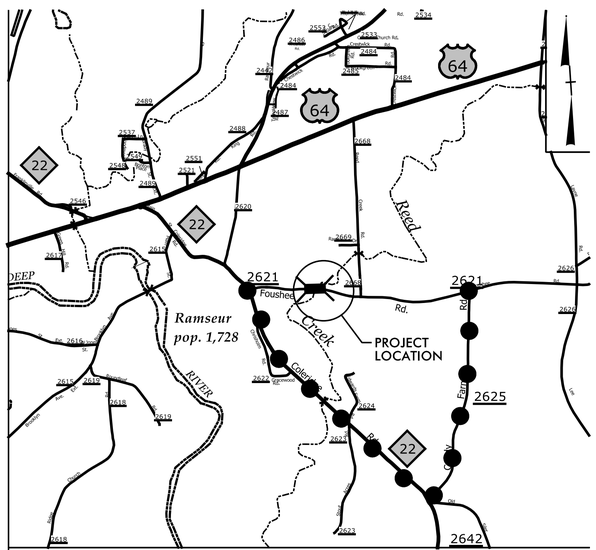


VICINITY MAP

OFF-SITE DETOUR ROUTE =

***LOCATION: REPLACE BRIDGE NO. 170 ON FOUSHEE ROAD (SR 2621) OVER REED CREEK***

***TYPE OF WORK: GRADING, DRAINAGE, PAVING & STRUCTURE***

## *INDEX OF SHEETS*


| SHEET NO. | TITLE |
|---|---|
| TMP-1 | TITLE SHEET, VICINITY MAP, AND INDEX OF SHEETS |
| TMP-1A | LIST OF APPLICABLE ROADWAY STANDARD DRAWINGS AND LEGEND |
| TMP-1B | TRANSPORTATION OPERATIONS PLAN: (MANAGEMENT STRATEGIES, GENERAL NOTES, AND PHASING) |
| TMP-2 | SIGN DESIGN |
| TMP-3 | OFF-SITE DETOUR |
| TMP-4 | ROAD CLOSURE |


SHEET NO.
TMP-1

**B-5739**

**TIP PROJECT:**

**DOCUMENT NOT CONSIDERED FINAL UNLESS ALL SIGNATURES COMPLETED**

*WORK ZONE SAFETY & MOBILITY*
*"from the MOUNTAINS to the COAST"*


*N.C.D.O.T. WORK ZONE TRAFFIC CONTROL*
*1561 MAIL SERVICE CENTER (MSC) RALEIGH, NC 27699-1561*
*750 N. GREENFIELD PARKWAY, GARNER, NC 27529 (DELIVERY)*
*PHONE: (919) 814-5000 FAX: (919) 771-2745*


J. E. HUMMER, PHD, PE — *STATE TRAFFIC MANAGEMENT ENGINEER*

_____ *TRAFFIC CONTROL PROJECT ENGINEER*

_____ *TRAFFIC CONTROL PROJECT DESIGN ENGINEER*

_____ *TRAFFIC CONTROL DESIGN ENGINEER*

DIVISION OF HIGHWAYS * STATE OF NORTH CAROLINA * DEPARTMENT OF TRANSPORTATION * WORK ZONE TRAFFIC CONTROL


SEPI ENGINEERING & CONSTRUCTION
1025 Wade Avenue
Raleigh, NC 27605
Tel:919-789-9977
Fax:919-789-9591
License: C-2197


*APPROVED:* DocuSigned by: Steve Miller 9FBC6C15CEEB486...

*DATE:* 5/18/2017

*SEAL*

NORTH CAROLINA PROFESSIONAL SEAL 037026 ENGINEER STEVEN D. MILLER

5/18/2017
X:\2016\R016.001.00_Division_8\R016.001.01_B-5739\Traffic\TrafficControl\TCP\B-5739_TMP-1.dgn
SMiller

DocuSign Envelope ID: C7678A40-113B-4BA5-A278-6ABC6112DDB4

| PROJ. REFERENCE NO. | SHEET NO. |
|---|---|
| B-5739 | TMP-1A |

# ROADWAY STANDARD DRAWINGS

THE FOLLOWING ROADWAY STANDARDS AS SHOWN IN "ROADWAY STANDARD DRAWINGS" - PROJECT SERVICES UNIT - N.C. DEPARTMENT OF TRANSPORTATION - RALEIGH, N.C., DATED JANUARY 2012 ARE APPLICABLE TO THIS PROJECT AND BY REFERENCE HEREBY ARE CONSIDERED A PART OF THESE PLANS:

| STD. NO. | TITLE |
|---|---|
| 1101.03 | TEMPORARY ROAD CLOSURES |
| 1101.05 | WORK ZONE VEHICLE ACCESSES |
| 1101.11 | TRAFFIC CONTROL DESIGN TABLES |
| 1110.01 | STATIONARY WORK ZONE SIGNS |
| 1145.01 | BARRICADES - TYPE III |

# LEGEND

## GENERAL

- DIRECTION OF TRAFFIC FLOW
- DIRECTION OF PEDESTRIAN TRAFFIC FLOW
- EXIST. PVMT.
- NORTH ARROW
- PROPOSED PVMT.
- TEMP. SHORING (LOCATION PURPOSES ONLY)
- WORK AREA
- REMOVAL
- USER DEFINED (IF NEEDED)
- USER DEFINED (IF NEEDED)

## SIGNALS

- EXISTING
- PROPOSED
- TEMPORARY

## PAVEMENT MARKINGS

- EXISTING LINES
- TEMPORARY LINES

## TRAFFIC CONTROL DEVICES

- BARRICADE (TYPE III)
- CONE
- DRUM
- SKINNY DRUM
- TUBULAR MARKER
- TEMPORARY CRASH CUSHION
- FLASHING ARROW BOARD
- FLAGGER
- LAW ENFORCEMENT
- TRUCK MOUNTED ATTENUATOR (TMA)
- CHANGEABLE MESSAGE SIGN

## TEMPORARY SIGNING

- PORTABLE SIGN
- STATIONARY SIGN
- STATIONARY OR PORTABLE SIGN

## PAVEMENT MARKERS

- CRYSTAL/CRYSTAL
- CRYSTAL/RED
- YELLOW/YELLOW

## PAVEMENT MARKING SYMBOLS

- PAVEMENT MARKING SYMBOLS

SEPI
ENGINEERING & CONSTRUCTION
1025 Wade Avenue
Raleigh, NC 27605
Tel:919-789-9977
Fax:919-789-9591
License: C-2197

APPROVED Steve Miller
DocuSigned by: BFBC6C15CEEB486...
DATE: 5/18/2017
SEAL

NORTH CAROLINA PROFESSIONAL SEAL 037026 ENGINEER STEVEN D. MILLER

DOCUMENT NOT CONSIDERED FINAL UNLESS ALL SIGNATURES COMPLETED

DIVISION OF HIGHWAYS * STATE OF NORTH CAROLINA * DEPARTMENT OF TRANSPORTATION * WORK ZONE TRAFFIC CONTROL

ROADWAY STANDARD DRAWINGS & LEGEND

2/24/2016
G:\Roadway\R016.001.00_Division_8\R016.001.01_B-5739\Traffic\TrafficControl\TCP\B-5739 TMP-1A.dgn
lwiles

DocuSign Envelope ID: C7678A40-113B-4BA5-A278-6ABC6112DDB4



# MANAGEMENT STRATEGIES

- CLOSE SR 2621 (FOUSHEE RD.) AND DETOUR TRAFFIC OFF-SITE
- LOCAL ACCESS TO ALL RESIDENCES AND BUSINESSES WILL BE MAINTAINED BETWEEN CLOSURE POINTS AT ALL TIMES DURING CONSTRUCTION
- PROVIDE ONE MONTH NOTICE TO THE ENGINEER, RANDOLPH COUNTY EMERGENCY SERVICES, AND RANDOLPH COUNTY SCHOOL OFFICIALS PRIOR TO ROAD CLOSURE

# GENERAL NOTES

CHANGES MAY BE REQUIRED WHEN PHYSICAL DIMENSIONS IN THE DETAIL DRAWINGS, STANDARD DETAILS, AND ROADWAY DETAILS ARE NOT ATTAINABLE TO MEET FIELD CONDITIONS OR RESULT IN DUPLICATE OR UNDESIRED OVERLAPPING OF DEVICES. MODIFICATION MAY INCLUDE: MOVING, SUPPLEMENTING, COVERING, OR REMOVAL OF DEVICES AS DIRECTED BY THE ENGINEER.

THE FOLLOWING GENERAL NOTES APPLY AT ALL TIMES FOR THE DURATION OF THE CONSTRUCTION PROJECT EXCEPT WHEN OTHERWISE NOTED IN THE PLAN OR DIRECTED BY THE ENGINEER.

TRAFFIC PATTERN ALTERATIONS

A) NOTIFY THE ENGINEER ONE MONTH PRIOR TO ANY TRAFFIC PATTERN ALTERATION.

SIGNING

B) INSTALL ADVANCE WORK ZONE WARNING SIGNS NO MORE THAN THREE (3) DAYS PRIOR TO THE BEGINNING OF CONSTRUCTION.

C) PROVIDE SIGNING AND DEVICES REQUIRED TO CLOSE THE ROAD ACCORDING TO THE ROADWAY STANDARD DRAWINGS AND TRAFFIC CONTROL PLANS.

PROVIDE SIGNING REQUIRED FOR THE OFF-SITE DETOUR ROUTE.

D) COVER OR REMOVE ALL SIGNS AND DEVICES REQUIRED TO CLOSE THE ROAD WHEN ROAD CLOSURE IS NOT IN OPERATION.

COVER OR REMOVE ALL SIGNS REQUIRED FOR THE OFF-SITE DETOUR WHEN THE DETOUR IS NOT IN OPERATION.

E) ENSURE ALL NECESSARY SIGNING IS IN PLACE PRIOR TO ALTERING ANY TRAFFIC PATTERN.

TRAFFIC CONTROL DEVICES

F) PLACE TYPE III BARRICADES, WITH "ROAD CLOSED" SIGN R11-2 ATTACHED, OF SUFFICIENT LENGTH TO CLOSE ENTIRE ROADWAY.

# PHASING

STEP 1: USING RSD 1101.03 SHEET 1 OF 9, CLOSE SR 2621 (FOUSHEE RD.) AND DETOUR TRAFFIC OFF-SITE AS SHOWN ON TMP-3. MAINTAIN ACCESS TO ALL RESIDENCES AND BUSINESSES BETWEEN CLOSURE POINTS.

STEP 2: REMOVE THE EXISTING STRUCTURE.

STEP 3: CONSTRUCT THE PROPOSED STRUCTURE AND ROADWAY.

STEP 4: PLACE FINAL PAVEMENT MARKINGS ACCORDING TO THE PAVEMENT MARKING PLANS.

STEP 5: OPEN SR 2621 (FOUSHEE RD.) TO TRAFFIC AND REMOVE ALL WORKZONE TRAFFIC CONTROL DEVICES.


SEPI ENGINEERING & CONSTRUCTION
1025 Wade Avenue
Raleigh, NC 27605
Tel:919-789-9977
Fax:919-789-9591
License: C-2197


APPROVED: DocuSigned by: Steve Miller 9FBC6C15CEEB486...

DATE: 5/18/2017

SEAL

NORTH CAROLINA PROFESSIONAL SEAL 037026 ENGINEER STEVEN D. MILLER

DOCUMENT NOT CONSIDERED FINAL UNLESS ALL SIGNATURES COMPLETED

DIVISION OF HIGHWAYS STATE OF NORTH CAROLINA DEPARTMENT OF TRANSPORTATION WORK ZONE TRAFFIC CONTROL

# TRANSPORTATION OPERATIONS PLAN

2/24/2016
G:\Roadway\R016.001.00_Division_8\R016.001.01_B-5739\Traffic\TrafficControl\TCP\B-5739 TMP-1B.dgn
jwiles

DocuSign Envelope ID: C7678A40-113B-4BA5-A278-6ABC6112DDB4

| PROJ. REFERENCE NO. | SHEET NO. |
|---|---|
| B-5739 | TMP-2 |

SIGN NUMBER: SP-1
TYPE: STATIONARY
QUANTITY: SEE PLANS

SIGN WIDTH: 3′-0″
HEIGHT: 2′-0″
TOTAL AREA: 6.0 Sq.Ft.

BORDER TYPE: INSET
RECESS: 0.47″
WIDTH: 0.63″
RADII: 1.5″

NO. Z BARS:
LENGTH:

BACKG COLOR: Fluorescent Orange
COPY COLOR: Black

| SYMBOL | X | Y | WID | HT |
|---|---|---|---|---|
| | | | | |
| | | | | |
| | | | | |
| | | | | |
| | | | | |
| | | | | |
| | | | | |

MAT′L: 0.080″ (2.0 mm) ALUMINUM

DESIGN BY: R DRAYTON
CHECKED BY: S MILLER
Feb 23, 2016
PROJECT ID: B-5739
DIV: 8

USE NOTES: 1,2

1. Legend and border shall be direct applied black non-reflective sheeting.
2. Background shall be NC GRADE B fluorescent orange retroreflective sheeting.

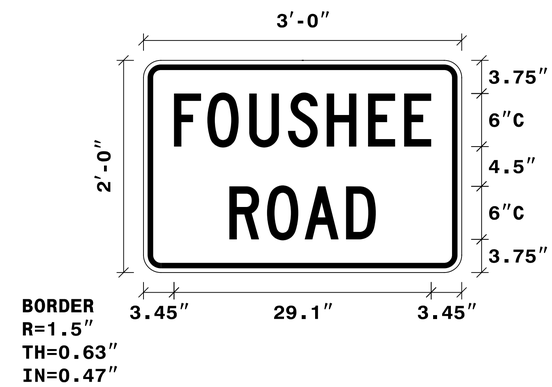


Spacing Factor is 1 unless specified otherwise

LETTER POSITIONS

Letter spacings are to start of next letter

| | | | | | | | | | | | | | | | | | | | | | | | | | | Series/Size Text Length |
|---|---|---|---|---|---|---|---|---|---|---|---|---|---|---|---|---|---|---|---|---|---|---|---|---|---|---|
| | | F | O | U | S | H | E | E | | | | | | | | | | | | | | | | | | C 2000 |
| | 3.5 | 3.8 | 4.7 | 4.4 | 4.4 | 4.7 | 4.1 | 3.1 | 3.5 | | | | | | | | | | | | | | | | | 29.1 |
| | | R | O | A | D | | | | | | | | | | | | | | | | | | | | | C 2000 |
| | 9.7 | 4.3 | 4.3 | 4.7 | 3.4 | 9.7 | | | | | | | | | | | | | | | | | | | | 16.6 |
| | | | | | | | | | | | | | | | | | | | | | | | | | | |
| | | | | | | | | | | | | | | | | | | | | | | | | | | |
| | | | | | | | | | | | | | | | | | | | | | | | | | | |
| | | | | | | | | | | | | | | | | | | | | | | | | | | |
| | | | | | | | | | | | | | | | | | | | | | | | | | | |
| | | | | | | | | | | | | | | | | | | | | | | | | | | |

FILENAME: B-5739 Sign Design

NORTH CAROLINA D.O.T. SIGN DETAIL

SEPI
ENGINEERING & CONSTRUCTION
1025 Wade Avenue
Raleigh, NC 27605
Tel:919-789-9977
Fax:919-789-9591
License: C-2197

APPROVED: DocuSigned by: Steve Miller 9FBC6C15CEEB486...
DATE: 5/18/2017
SEAL

NORTH CAROLINA PROFESSIONAL SEAL 037026 ENGINEER STEVEN D. MILLER

DOCUMENT NOT CONSIDERED FINAL UNLESS ALL SIGNATURES COMPLETED

DIVISION OF HIGHWAYS STATE OF NORTH CAROLINA DEPARTMENT OF TRANSPORTATION WORK ZONE TRAFFIC CONTROL

SIGN DESIGN

2/24/2016
G:\Roadway\R016.001.00_Division_8\R016.001.01_B-5739\Traffic\TrafficControl\TCP\B-5739 TMP-2.dgn
lwiles

DocuSign Envelope ID: C7678A40-113B-4BA5-A278-6ABC6112DDB4

| PROJ. REFERENCE NO. | SHEET NO. |
|---|---|
| B-5739 | TMP-3 |

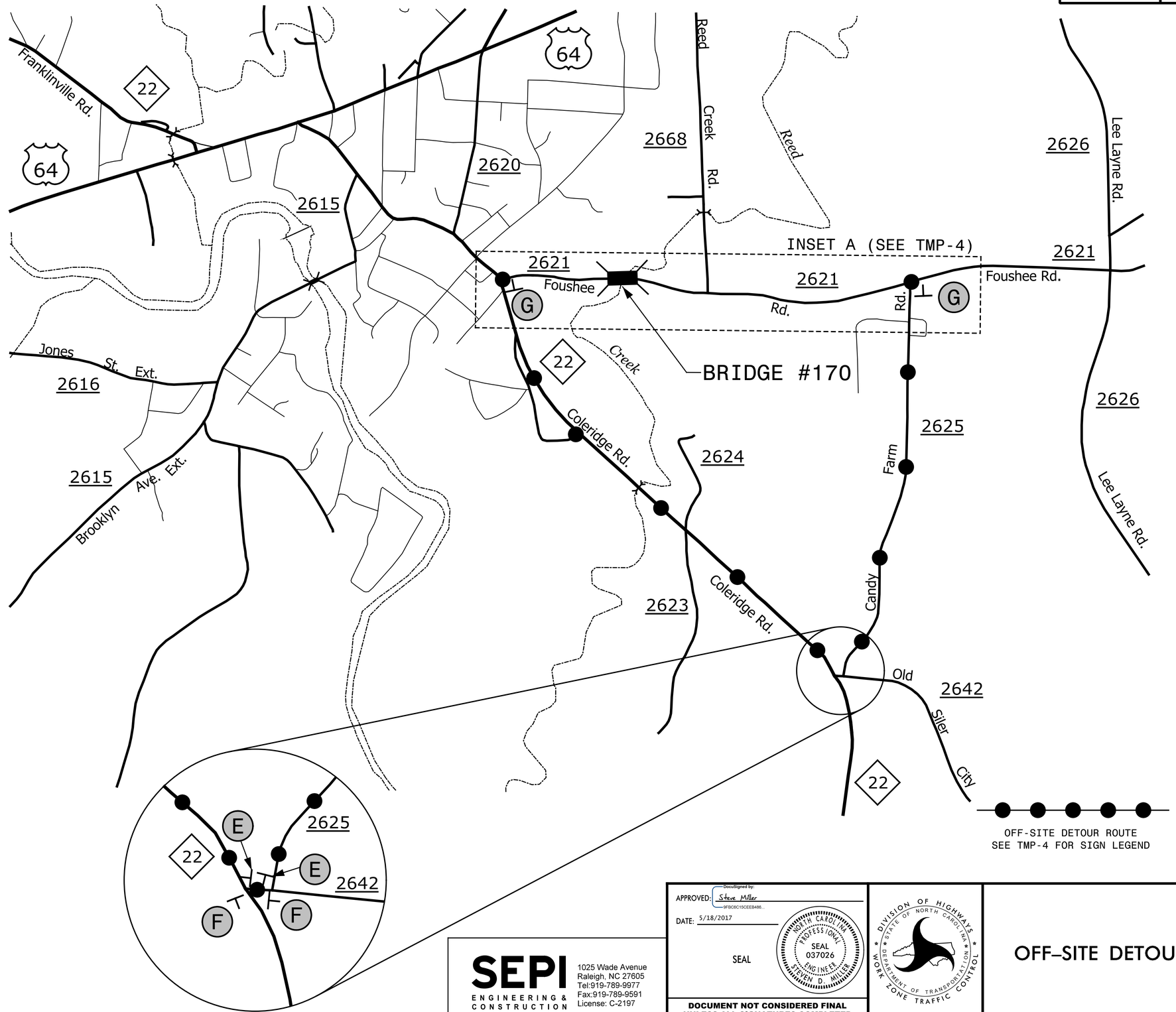


SEPI
ENGINEERING & CONSTRUCTION
1025 Wade Avenue
Raleigh, NC 27605
Tel:919-789-9977
Fax:919-789-9591
License: C-2197

APPROVED: DocuSigned by: Steve Miller 9FBC6C15CEEB486...

DATE: 5/18/2017

SEAL

NORTH CAROLINA PROFESSIONAL SEAL 037026 ENGINEER STEVEN D. MILLER

DOCUMENT NOT CONSIDERED FINAL UNLESS ALL SIGNATURES COMPLETED

DIVISION OF HIGHWAYS STATE OF NORTH CAROLINA DEPARTMENT OF TRANSPORTATION WORK ZONE TRAFFIC CONTROL

# OFF–SITE DETOUR

2/24/2016
G:\Roadway\R016.001.00_Division_8\R016.001.01_B-5739\Traffic\TrafficControl\TCP\B-5739_TMP-3.dgn
twiles

DocuSign Envelope ID: C7678A40-113B-4BA5-A278-6ABC6112DDB4

| PROJ. REFERENCE NO. | SHEET NO. |
|---|---|
| B-5739 | TMP-4 |

# INSET A

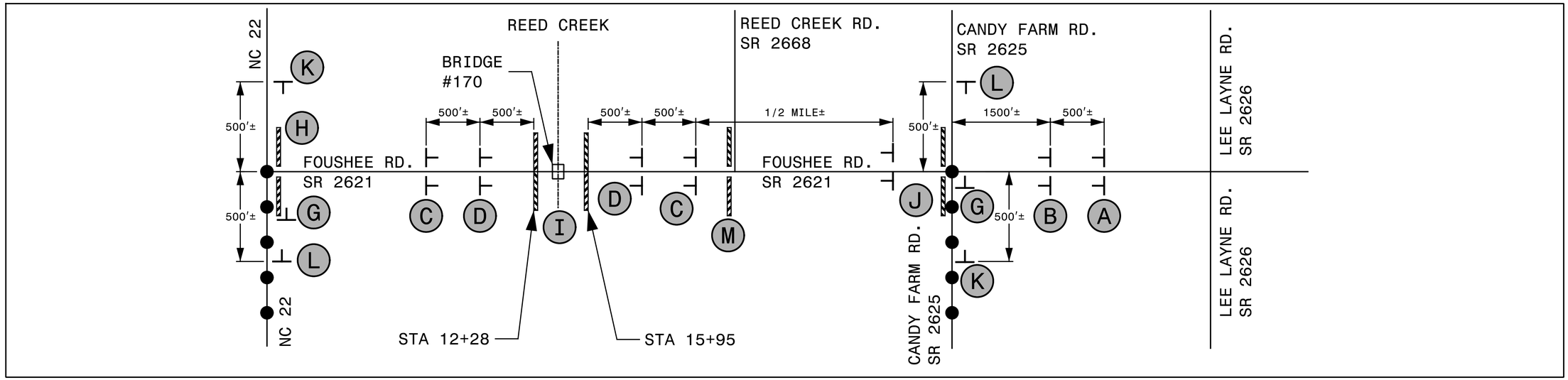

W20-3
48" X 48"

A

W20-2
48" X 48"

B

W20-3
48" X 48"

C

W20-3
48" X 48"

D

SP-1
36" X 24"

M4-8
24" X 12"



M6-1
21" X 15"

E

SP-1
36" X 24"

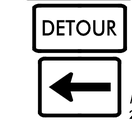


M4-8
24" X 12"



M6-1 L
21" X 15"

F

M4-8 A
24" X 18"

G

R11-4
60" x 30"

M4-10R
48" x 18"

TYPE III BARRICADE

H

R11-2
48" x 30"

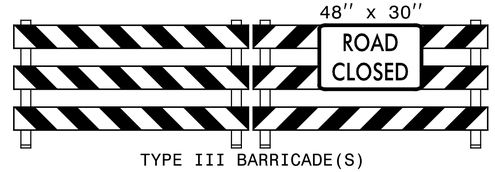


TYPE III BARRICADE(S)

I

R11-4
60" x 30"

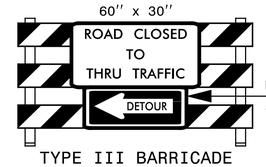


M4-10L
48" x 18"

TYPE III BARRICADE

J

W20-3
48" X 48"

SP-4L
42" X 12"

K

W20-3
48" X 48"

SP-4R
42" X 12"

L

R11-4
60" x 30"

TYPE III BARRICADE

M

SEPI
ENGINEERING & CONSTRUCTION
1025 Wade Avenue
Raleigh, NC 27605
Tel:919-789-9977
Fax:919-789-9591
License: C-2197

APPROVED: DocuSigned by: Steve Miller 9FBC6C15CEEB486...

DATE: 5/18/2017

SEAL

NORTH CAROLINA PROFESSIONAL SEAL 037026 ENGINEER STEVEN D. MILLER

DOCUMENT NOT CONSIDERED FINAL UNLESS ALL SIGNATURES COMPLETED

DIVISION OF HIGHWAYS STATE OF NORTH CAROLINA DEPARTMENT OF TRANSPORTATION WORK ZONE TRAFFIC CONTROL

ROAD CLOSURE

10/25/2016
G:\Roadway\R016.001.00_Division_8\R016.001.01_B-5739\Traffic\TrafficControl\TCP\B-5739_TMP-4.dgn
Mishak

DocuSign Envelope ID: C7678A40-113B-4BA5-A278-6ABC6112DDB4

T.I.P.: B-5739

| TIP NO. | SHEET NO. |
|---|---|
| B-5739 | PMP-1 |

APPROVED: DocuSigned by: Steve Miller 9FBC8C15CEEB486...

DATE: 5/18/2017

SEAL

NORTH CAROLINA PROFESSIONAL SEAL 037026 ENGINEER STEVEN D. MILLER

**DOCUMENT NOT CONSIDERED FINAL UNLESS ALL SIGNATURES COMPLETED**

# STATE OF NORTH CAROLINA
# DEPARTMENT OF TRANSPORTATION

# PAVEMENT MARKING PLAN
## RANDOLPH COUNTY

## INDEX


| SHEET NO. | DESCRIPTION |
|---|---|
| PMP-1 | PAVEMENT MARKING PLAN COVER SHEET AND SCHEDULE |
| PMP-2 | PAVEMENT MARKING DETAIL |


## ROADWAY STANDARD DRAWING

THE FOLLOWING ROADWAY STANDARDS AS APPEAR IN "ROADWAY STANDARD DRAWINGS" - PROJECT SERVICES UNIT - N.C. DEPARTMENT OF TRANSPORTATION - RALEIGH, N.C., DATED JANUARY 2012 ARE APPLICABLE TO THIS PROJECT AND BY REFERENCE HEREBY ARE CONSIDERED A PART OF THESE PLANS:

| STD. NO. | TITLE |
|---|---|
| 1205.01 | PAVEMENT MARKINGS - LINE TYPES AND OFFSETS |
| 1205.02 | PAVEMENT MARKINGS - TWO-LANE AND MULTILANE ROADWAYS |
| 1205.12 | PAVEMENT MARKINGS - BRIDGES |
| 1261.01 | GUARDRAIL AND BARRIER DELINEATORS - INSTALLATION SPACING |
| 1261.02 | GUARDRAIL AND BARRIER DELINEATORS - TYPES AND MOUNTING |
| 1262.01 | GUARDRAIL END DELINEATION |

## GENERAL NOTES

THE FOLLOWING GENERAL NOTES APPLY AT ALL TIMES FOR THE DURATION OF THE CONSTRUCTION PROJECT, EXCEPT WHEN OTHERWISE NOTED IN THE PLAN, OR DIRECTED BY THE ENGINEER.

A) INSTALL PAVEMENT MARKINGS AND PAVEMENT MARKERS ON THE FINAL SURFACE AS FOLLOWS:

| ROAD NAME | MARKING | MARKER |
|---|---|---|
| FOUSHEE RD. | THERMOPLASTIC | NONE |

B) TIE PROPOSED PAVEMENT MARKING LINES TO EXISTING PAVEMENT MARKING LINES.

C) REMOVE/REPLACE ANY CONFLICTING/DAMAGED PAVEMENT MARKINGS AND MARKERS.

D) PASSING ZONES WILL BE DETERMINED IN THE FIELD AND MUST BE APPROVED BY THE ENGINEER.

## PAVEMENT MARKING SCHEDULE

| SYMBOL | DESCRIPTION |
|---|---|
| | THERMOPLASTIC (4", 90 MIL) |
| TA | WHITE EDGELINE |
| | THERMOPLASTIC (4", 120 MIL) |
| TI | YELLOW DOUBLE CENTER |

*N.C.D.O.T. SIGNING AND DELINEATION UNIT*

*RENEE ROACH, PE* SIGNING AND DELINEATION REGIONAL ENGINEER

_____ SIGNING & DELINEATION PROJECT DESIGN ENGINEER

STATE OF NORTH CAROLINA DEPARTMENT OF TRANSPORTATION

*PLAN PREPARED BY: SEPI Engineering*

*STEVE MILLER, P.E.* PROJECT MANAGER

*MAROUN ISHAK* TRAFFIC ENGINEER

SEPI ENGINEERING & CONSTRUCTION
1025 Wade Avenue
Raleigh, NC 27605
Tel:919-789-9977
Fax:919-789-9591
License: C-2197

5/18/2017
5:26:06 PM
S:\Traffic\Traffic\Pavement Markings\B-5739_PMP-1.dgn

DocuSign Envelope ID: C7678A40-113B-4BA5-A278-6ABC6112DDB4

| TIP NO. | SHEET NO. |
|---|---|
| B-5739 | PMP-2 |

APPROVED: DocuSigned by: Steve Miller 0F9C8C15CEEB486...

DATE: 5/18/2017

SEAL

NORTH CAROLINA PROFESSIONAL SEAL 037026 ENGINEER STEVEN D. MILLER

**DOCUMENT NOT CONSIDERED FINAL UNLESS ALL SIGNATURES COMPLETED**

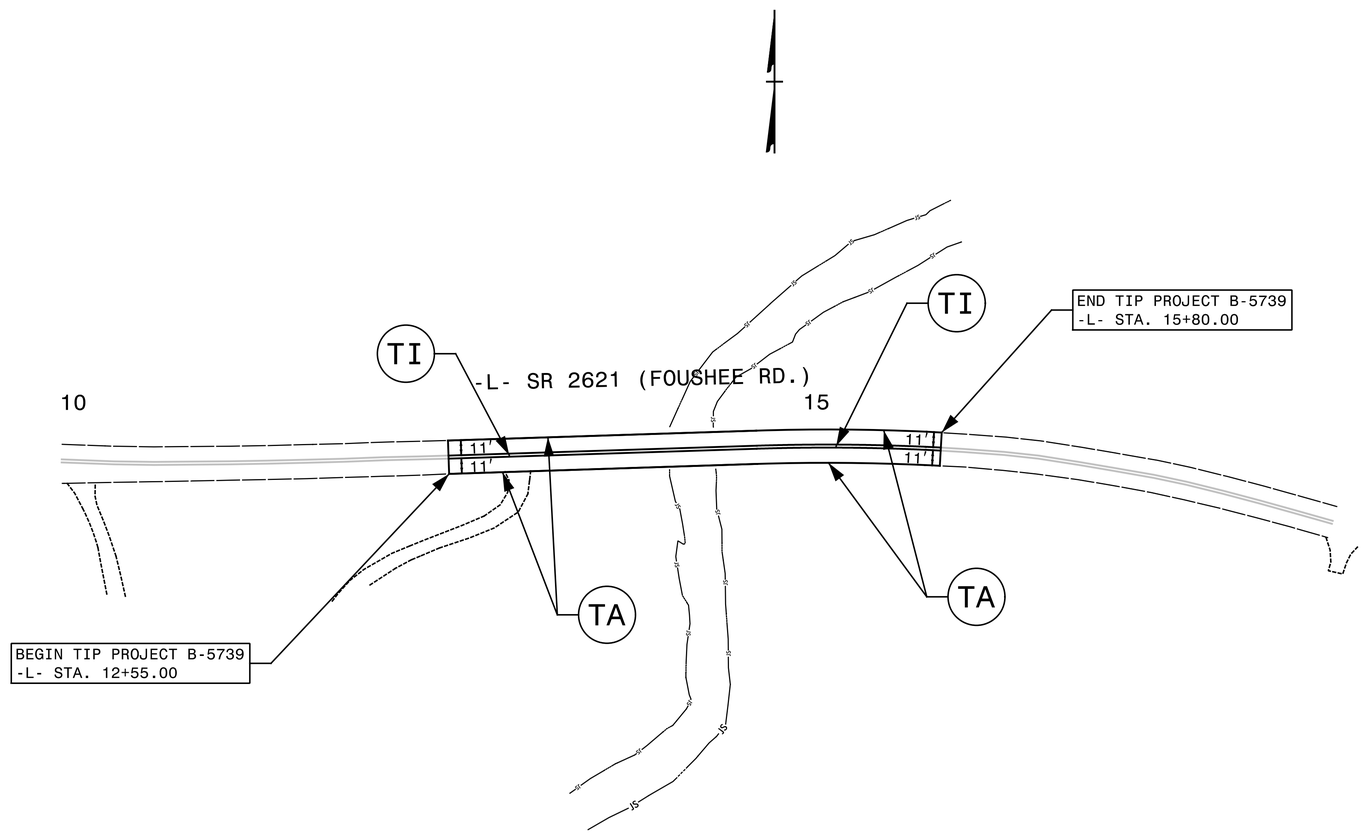


SEPI ENGINEERING & CONSTRUCTION
1025 Wade Avenue
Raleigh, NC 27605
Tel:919-789-9977
Fax:919-789-9591
License: C-2197

# PAVEMENT MARKING DETAIL

5/18/2017
R:\R016.001.00_Division_8\R016.001.01_B-5739\Traffic\Pavement Markings\B-5739_PMP-2.dgn
SELMAC

TIP PROJECT: B-5739

| STATE | STATE PROJECT REFERENCE NO. | SHEET NO. | TOTAL SHEETS |
|---|---|---|---|
| N.C. | B-5739 | EC-1 | |

| STATE PROJ. NO. | F.A. PROJ. NO. | DESCRIPTION |
|---|---|---|
| | | |
| | | |
| | | |
| | | |

# STATE OF NORTH CAROLINA
# DIVISION OF HIGHWAYS

## PLAN FOR PROPOSED
# HIGHWAY EROSION CONTROL

# RANDOLPH COUNTY

***LOCATION: REPLACE BRIDGE NO. 170 OVER REED CREEK ON SR 2621 (FOUSHEE ROAD)***
***TYPE OF WORK: GRADING, DRAINAGE, PAVING & STRUCTURE***

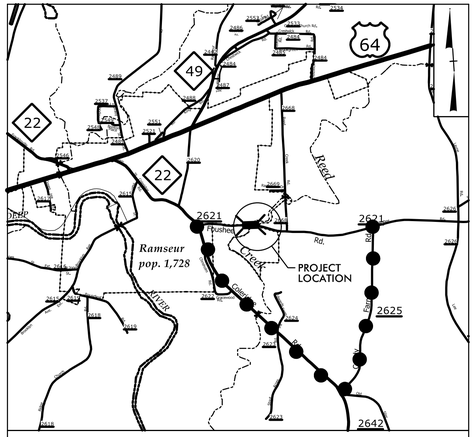


VICINITY MAP

OFF-SITE DETOUR ROUTE =

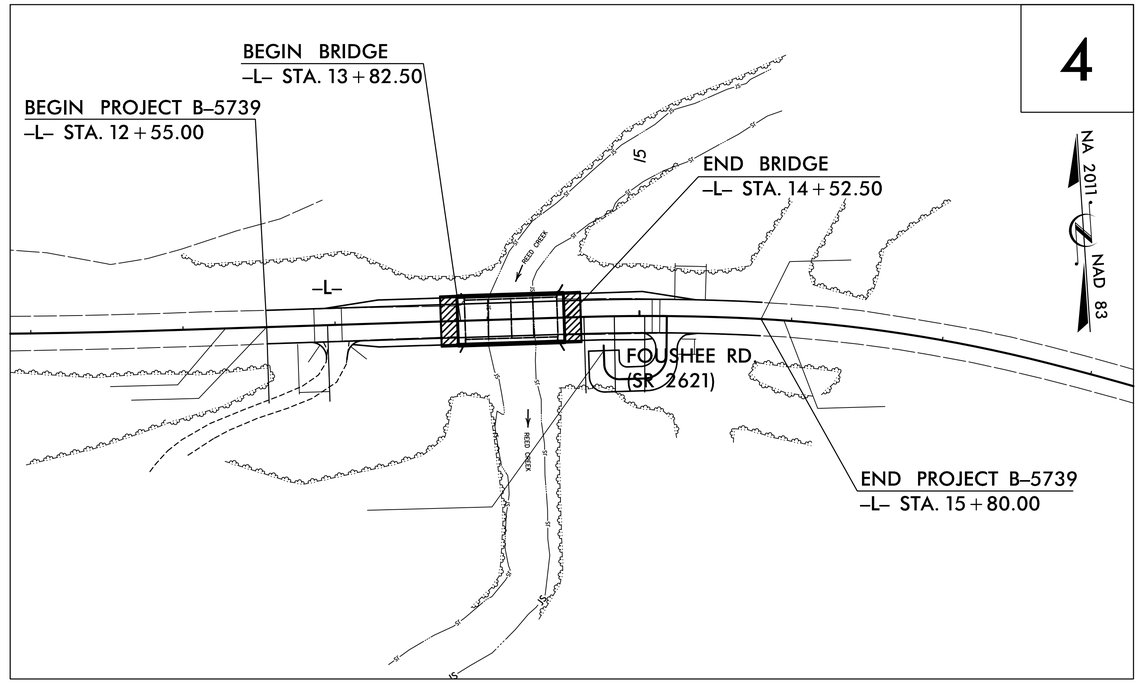


## EROSION AND SEDIMENT CONTROL MEASURES

| Std. # | Description | Symbol |
|---|---|---|
| 1630.03 | Temporary Silt Ditch | TSD |
| 1630.05 | Temporary Diversion | TD |
| 1605.01 | Temporary Silt Fence | |
| 1606.01 | Special Sediment Control Fence | |
| 1622.01 | Temporary Berms and Slope Drains | |
| 1630.02 | Silt Basin Type B | |
| 1633.01 | Temporary Rock Silt Check Type-A | |
| | Temporary Rock Silt Check Type-A with Matting and Polyacrylamide (PAM) | |
| 1633.02 | Temporary Rock Silt Check Type-B | |
| | Wattle/ Coir Fiber Wattle | EW CFW |
| | Wattle/ Coir Fiber Wattle with Polyacrylamide (PAM) | |
| 1634.01 | Temporary Rock Sediment Dam Type-A | |
| 1634.02 | Temporary Rock Sediment Dam Type-B | |
| 1635.01 | Rock Pipe Inlet Sediment Trap Type-A | |
| 1635.02 | Rock Pipe Inlet Sediment Trap Type-B | |
| 1630.04 | Stilling Basin | |
| 1630.06 | Special Stilling Basin | |
| | Rock Inlet Sediment Trap: | |
| 1632.01 | Type A | A |
| 1632.02 | Type B | B |
| 1632.03 | Type C | C |
| | Skimmer Basin | |
| | Tiered Skimmer Basin | |
| | Infiltration Basin | |

**THIS PROJECT CONTAINS EROSION CONTROL PLANS FOR CLEARING AND GRUBBING PHASE OF CONSTRUCTION.**

***GRAPHIC SCALE***

30 0 30 60

***THESE EROSION AND SEDIMENT CONTROL PLANS COMPLY WITH THE REGULATIONS SET FORTH BY THE NCG-010000 GENERAL CONSTRUCTION PERMIT EFFECTIVE AUGUST 3, 2011 AND ISSUED BY THE NORTH CAROLINA DEPARTMENT OF ENVIRONMENT AND NATURAL RESOURCES DIVISION OF WATER RESOURCES.***

*Prepared In the Office of:*


SEPI
ENGINEERING & CONSTRUCTION
1025 Wade Avenue
Raleigh, NC 27605
Tel:919-789-9977
Fax:919-789-9591
License: C-2197


*Designed by:*

***BRIAN A. MAZZOCHI, P.E.*** ***3120***
*NAME* *LEVEL III CERTIFICATION NO.*

*Reviewed In the Office of:*

***ROADSIDE ENVIRONMENTAL UNIT***
*1 South Wilmington St.*
*Raleigh, NC 27611*

***2012 STANDARD SPECIFICATIONS***

*Reviewed by:*

***WES CHANDLER, E.I.***

**Roadway Standard Drawings**

The following roadway english standards as appear in "Roadway Standard Drawings"– Roadway Design Unit – N. C. Department of Transportation – Raleigh, N. C., dated January 2012 and the latest revison thereto are applicable to this project and by reference hereby are considered a part of these plans.

| | | | |
|---|---|---|---|
| 1604.01 | Railroad Erosion Control Detail | 1632.01 | Rock Inlet Sediment Trap Type A |
| 1605.01 | Temporary Silt Fence | 1632.02 | Rock Inlet Sediment Trap Type B |
| 1606.01 | Special Sediment Control Fence | 1632.03 | Rock Inlet Sediment Trap Type C |
| 1607.01 | Gravel Construction Entrance | 1633.01 | Temporary Rock Silt Check Type A |
| 1622.01 | Temporary Berms and Slope Drains | 1633.02 | Temporary Rock Silt Check Type B |
| 1630.01 | Riser Basin | 1634.01 | Temporary Rock Sediment Dam Type A |
| 1630.02 | Silt Basin Type B | 1634.02 | Temporary Rock Sediment Dam Type B |
| 1630.03 | Temporary Silt Ditch | 1635.01 | Rock Pipe Inlet Sediment Trap Type A |
| 1630.04 | Stilling Basin | 1635.02 | Rock Pipe Inlet Sediment Trap Type B |
| 1630.05 | Temporary Diversion | 1640.01 | Coir Fiber Baffle |
| 1630.06 | Special Stilling Basin | 1645.01 | Temporary Stream Crossing |
| 1631.01 | Matting Installation | | |


SYSTIME=09:45
SYSDATE=10/05/2012
USERNAME=

| PROJECT REFERENCE NO. | SHEET NO. |
|---|---|
| B-5739 | EC-2 |
| R/W SHEET NO. | |
| ROADWAY DESIGN ENGINEER | HYDRAULICS ENGINEER |

# TEMPORARY ROCK SILT CHECK TYPE 'A' WITH EXCELSIOR MATTING AND POLYACRYLAMIDE (PAM)

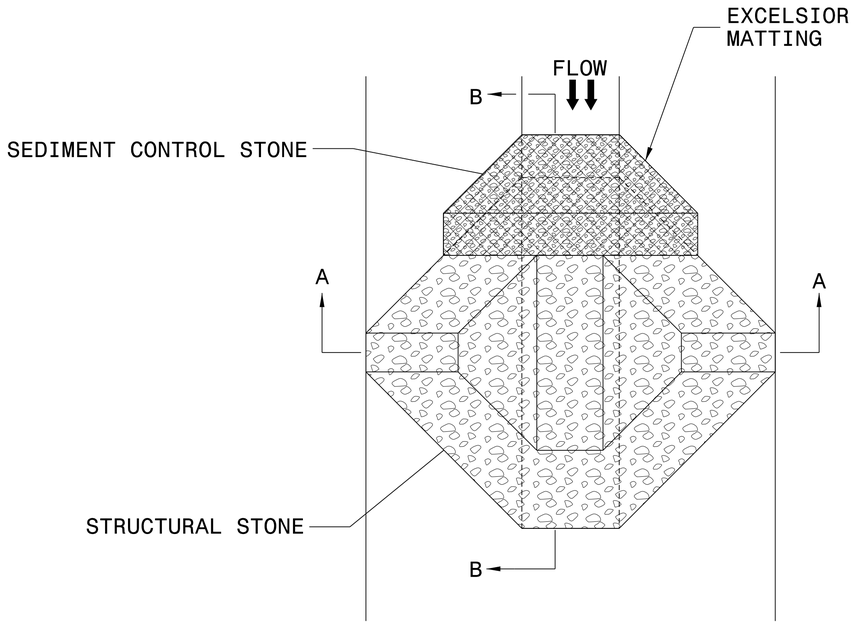


PLAN

NOTES

USE EXCELSIOR FOR MATTING MATERIAL AND ANCHOR MATTING SECTION AT TOP AND BOTTOM WITH CLASS B STONE.

PRIOR TO POLYACRYLAMIDE (PAM) APPLICATION, OBTAIN A SOIL SAMPLE FROM PROJECT LOCATION, AND FROM OFFSITE MATERIAL, AND ANALYZE FOR APPROPRIATE PAM FLOCCULANT TO BE APPLIED TO EACH ROCK SILT CHECK.

INITIALLY APPLY 4 OUNCES OF POLYACRYLAMIDE (PAM) TO TOP OF MATTING SECTION AND AFTER EVERY RAINFALL EVENT THAT EQUALS OR EXCEEDS 0.50 INCHES.

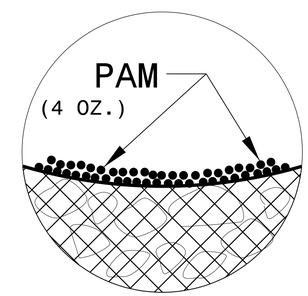


INSET A

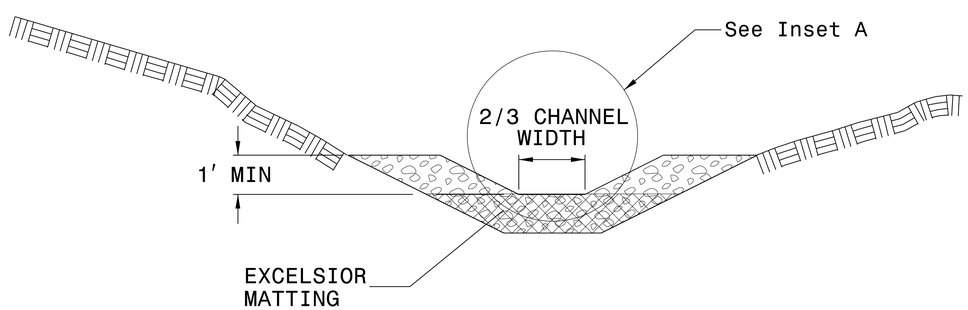


SECTION A-A

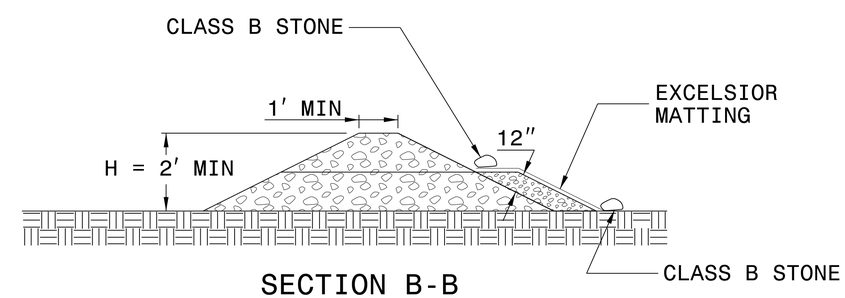


SECTION B-B

NOT TO SCALE

| PROJECT REFERENCE NO. | SHEET NO. |
|---|---|
| B-5739 | EC-3 |
| ROADWAY DESIGN ENGINEER | HYDRAULICS ENGINEER |

DIVISION OF HIGHWAYS
STATE OF NORTH CAROLINA

# *SOIL STABILIZATION TIMEFRAMES*

| SITE DESCRIPTION | STABILIZATION TIME | TIMEFRAME EXCEPTIONS |
|---|---|---|
| PERIMETER DIKES, SWALES, DITCHES AND SLOPES | 7 DAYS | NONE |
| HIGH QUALITY WATER (HQW) ZONES | 7 DAYS | NONE |
| SLOPES STEEPER THAN 3:1 | 7 DAYS | IF SLOPES ARE 10' OR LESS IN LENGTH AND ARE NOT STEEPER THAN 2:1, 14 DAYS ARE ALLOWED. |
| SLOPES 3:1 OR FLATTER | 14 DAYS | 7 DAYS FOR SLOPES GREATER THAN 50' IN LENGTH. |
| ALL OTHER AREAS WITH SLOPES FLATTER THAN 4:1 | 14 DAYS | NONE, EXCEPT FOR PERIMETERS AND HQW ZONES. |

# CLEARING AND GRUBBING

CLEARING AND GRUBBING
EROSION CONTROL FOR
CONSTRUCTION SHEET _4_

NOTE:
PLACE TEMPORARY ROCK SEDIMENT DAMS TYPE – B AND TEMPORARY ROCK SILT CHECKS TYPE – A AT DRAINAGE OUTLETS.

NOTE:
PERIMETER EROSION CONTROL MEASURES SHALL BE INSTALLED DURING CLEARING AND GRUBBING PHASE.

EXCAVATION

CLASS 'II' RIP RAP


SEPI ENGINEERING & CONSTRUCTION
1025 Wade Avenue
Raleigh, NC 27605
Tel:919-789-9977
Fax:919-789-9591
License: C-2197


30 0 30 60

| PROJECT REFERENCE NO. | SHEET NO. |
|---|---|
| B-5739 | EC-4/CONST.4 |
| R/W SHEET NO. | |
| ROADWAY DESIGN ENGINEER | HYDRAULICS ENGINEER |

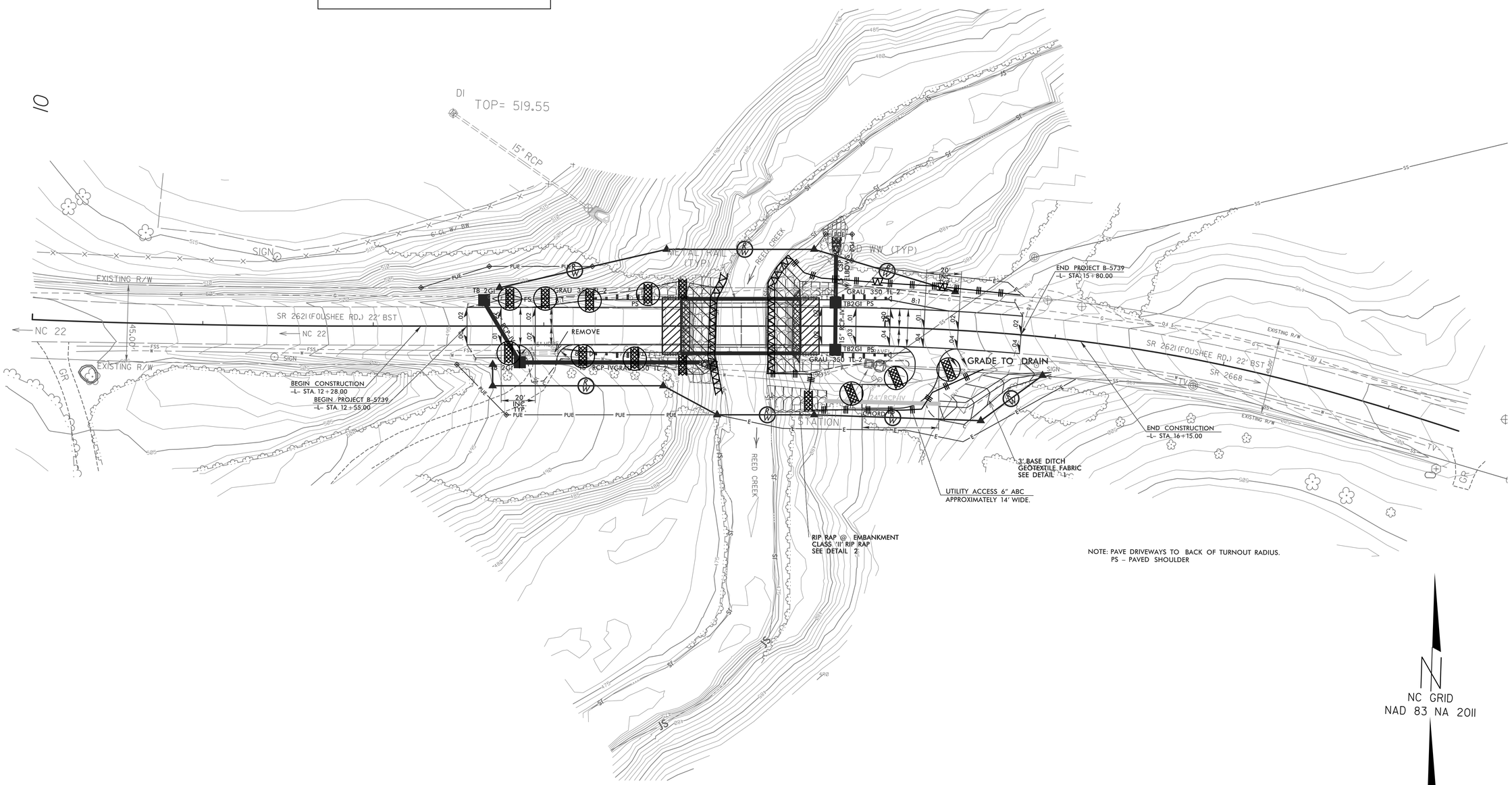

# FINAL GRADE

NOTE:
PLACE TEMPORARY ROCK SEDIMENT DAMS TYPE – B AND TEMPORARY ROCK SILT CHECKS TYPE – A AT DRAINAGE OUTLETS.

FINAL GRADE
EROSION CONTROL FOR
CONSTRUCTION SHEET 4

EXCAVATION

CLASS 'II' RIP RAP

SEPI ENGINEERING & CONSTRUCTION
1025 Wade Avenue
Raleigh, NC 27605
Tel:919-789-9977
Fax:919-789-9591
License: C-2197

30 0 30 60

| PROJECT REFERENCE NO. | SHEET NO. |
|---|---|
| B-5739 | EC-5/CONST.4 |
| R/W SHEET NO. | |
| ROADWAY DESIGN ENGINEER | HYDRAULICS ENGINEER |

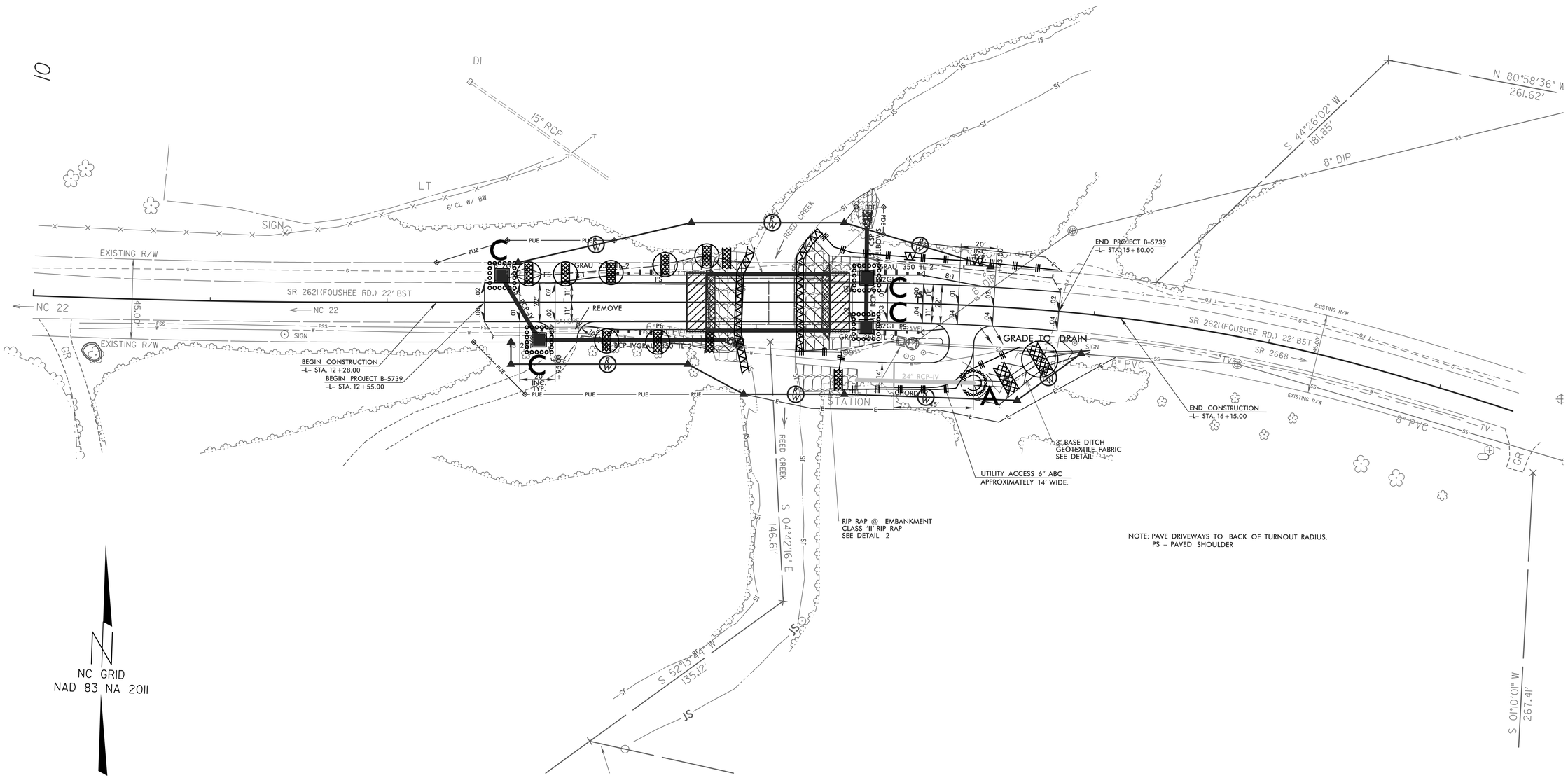

DocuSign Envelope ID: 020E77C2-D87B-4C6F-9D2A-FAD2ED0C15E9

09/08/99

TIP PROJECT: B–5739

| T.I.P. NO. | SHEET NO. |
|---|---|
| B–5739 | UC–1 |

STATE OF NORTH CAROLINA
DIVISION OF HIGHWAYS

# UTILITY CONSTRUCTION PLANS
# RANDOLPH COUNTY

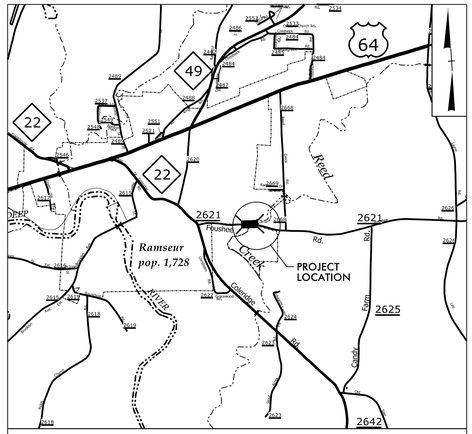


VICINITY MAP

**LOCATION: BRIDGE NO. 170 OVER REED CREEK ON S.R. 2621 (FOUSHEE ROAD)**

**TYPE OF WORK: RELOCATION OF WATER LINE AND FORCE MAIN SEWER**

NAD 83
NA 2011

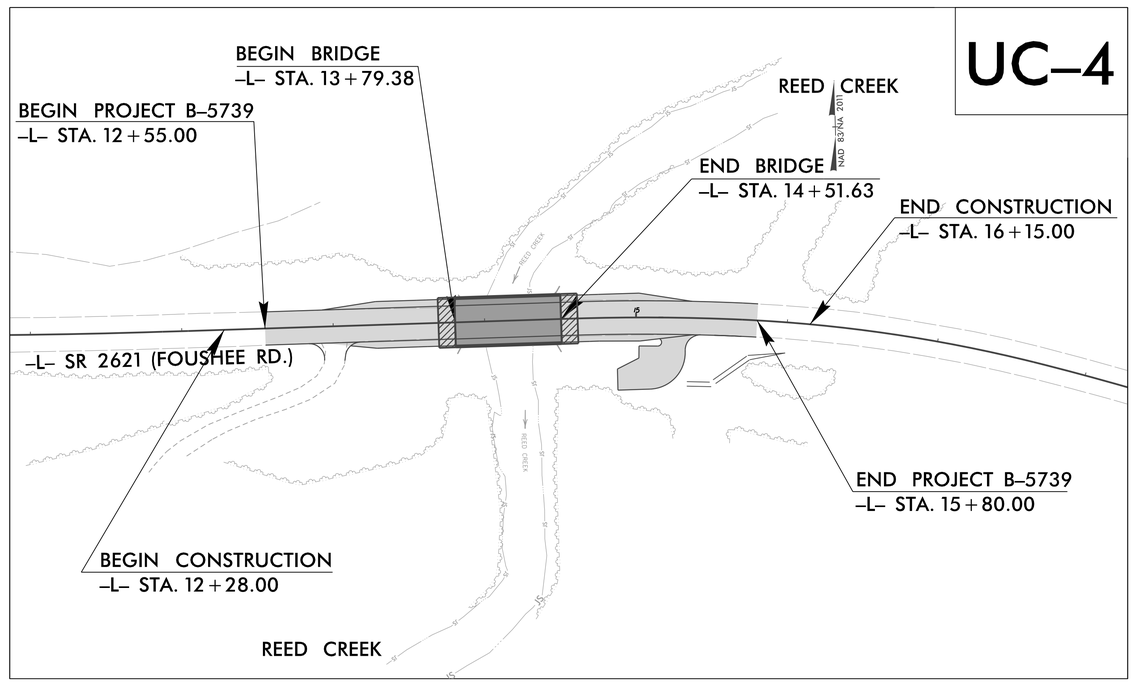


**GRAPHIC SCALES**

50 25 0 50 100
PLANS

50 25 0 50 100
PROFILE (HORIZONTAL)

10 5 0 10 20
PROFILE (VERTICAL)

**INDEX OF SHEETS**


| SHEET NO.: | DESCRIPTION: |
|---|---|
| UC–1 | TITLE SHEET |
| UC–2 | UTILITY SYMBOLOGY |
| UC–3 | NOTES |
| UC–3A | DETAILS |
| UC–4 | UTILITY CONSTRUCTION AND PROFILE SHEET |


**WATER AND SEWER OWNERS ON PROJECT**

(A) WATER – TOWN OF RAMSEUR
(B) SANITARY SEWER – TOWN OF RAMSEUR


PREPARED IN THE OFFICE OF

SEPI ENGINEERING & CONSTRUCTION
1025 Wade Avenue
Raleigh, NC 27605
Tel:919-789-9977
Fax:919-789-9591
License: C-2197

| | |
|---|---|
| KELLY HAYES | CONSULTANT CONTACT #1 |
| JUSTIN BEARD | CONSULTANT CONTACT #2 |
| STEVE SCOTT | CONSULTANT CONTACT #3 |


SEAL

NORTH CAROLINA PROFESSIONAL SEAL 020160 ENGINEER
DocuSigned by:
Justin Beard
5/4/2017


DIVISION OF HIGHWAYS
UTILITIES UNIT
1555 MAIL SERVICES CENTER
RALEIGH NC 27699–1555
PHONE (919) 707–6690
FAX (919) 250–4151

| | |
|---|---|
| TIM WELCH, P.E. | DIVISION 8 BRIDGE PROGRAM MANAGER |
| JAMIE YOW | DIVISION 8 UTILITY COORDINATOR |
| KELLY HAYES, P.E., PLS | UTILITIES COORDINATION CONSULTANT |


5/4/2017
:\B-5739_Ut_tsh_UC01_psh.dgn
USER:tfreal

DocuSign Envelope ID: 020E77C2-D87B-4C6F-9D2A-FAD2ED0C15E9

5/14/99

# STATE OF NORTH CAROLINA
# DIVISION OF HIGHWAYS

SEPI ENGINEERING & CONSTRUCTION
1025 Wade Avenue
Raleigh, NC 27605
Tel:919-789-9977
Fax:919-789-9591
License: C-2197

| PROJECT REFERENCE NO. | SHEET NO. |
|---|---|
| B-5739 | UC-2 |

UTILITY CONSTRUCTION

NORTH CAROLINA PROFESSIONAL SEAL ENGINEER KELLY E. HAYES
DocuSigned by: Kelly E. Hayes
5/4/2017

# UTILITIES PLAN SHEET SYMBOLS

## PROPOSED WATER SYMBOLS

- Water Line (Sized as Shown) — 12" WL
- 11¼ Degree Bend
- 22½ Degree Bend
- 45 Degree Bend
- 90 Degree Bend
- Plug
- Tee
- Cross
- Reducer
- Gate Valve — GV
- Butterfly Valve — BV
- Tapping Valve — TGV
- Line Stop — LS
- Line Stop with Bypass — LS/BP
- Blow Off — BO
- Fire Hydrant — PFH
- Relocate Fire Hydrant — RFH
- Remove Fire Hydrant — REM FH
- Water Meter — PWM
- Relocate Water Meter — RWM
- Remove Water Meter — REM WM
- Water Pump Station — PS(W)
- RPZ Backflow Preventer — PRPZ
- DCV Backflow Preventer — PBFP
- Relocate RPZ Backflow Preventer — RRPZ
- Relocate DCV Backflow Preventer — RBFP

## PROPOSED SEWER SYMBOLS

- Gravity Sewer Line (Sized as Shown) — 12" SS
- Force Main Sewer Line (Sized as Shown) — 12" FSS
- Manhole (Sized per Note)
- Sewer Pump Station — PS(SS)

## PROPOSED MISCELLANOUS UTILITIES SYMBOLS

- Power Pole
- Telephone Pole
- Joint Use Pole
- Telephone Pedestal — TEL PED
- Utility Line by Others (Type as Shown) — PROP O/H POW LINES
- Trenchless Installation — 12" TL INSTALL
- Encasement by Open Cut — 24" ENCAS BY OC
- Encasement — 24" ENCASEMENT
- Thrust Block
- Air Release Valve — AR
- Utility Vault — UV
- Concrete Pier — CP
- Steel Pier — SP
- Plan Note — NOTE
- Pay Item Note — PAY ITEM

## EXISTING UTILITIES SYMBOLS

- Power Pole
- Telephone Pole
- Joint Use Pole
- Utility Pole
- Utility Pole with Base
- H-Frame Pole
- Power Transmission Line Tower
- Water Manhole
- Power Manhole
- Telephone Manhole
- Sanitary Sewer Manhole
- Hand Hole for Cable
- Power Transformer
- Telephone Pedestal
- CATV Pedestal
- Gas Valve
- Gas Meter
- Located Miscellaneous Utility Object
- Abandoned According to Utility Records — AATUR
- End of Information — E.O.I.
- *Underground Power Line — P
- *Underground Telephone Cable — T
- *Underground Telephone Conduit — TC
- *Underground Fiber Optics Telephone Cable — T FO
- *Underground TV Cable — TV
- *Underground Fiber Optics TV Cable — TV FO
- *Underground Gas Pipeline — G
- Aboveground Gas Pipeline — A/G Gas
- *Underground Water Line — W
- Aboveground Water Line — A/G Water
- *Underground Gravity Sanitary Sewer Line — SS
- Aboveground Gravity Sanitary Sewer Line — A/G Sanitary Sewer
- *Underground SS Forced Main Line — FSS
- Underground Unknown Utility Line — ?UTL
- SUE Test Hole
- Water Meter
- Water Valve
- Fire Hydrant
- Sanitary Sewer Cleanout

*For Existing Utilities

- Utility Line Drawn from Record (Type as Shown) — U
- Designated Utility Line (Type as Shown) — W

5/4/2017
1:50
pw:\\sefpr.pw.bentley.com:pw02\Projects\B-5739\Utility\UC02_psh.dgn

REV: 2/1/2012

DocuSign Envelope ID: 020E77C2-D87B-4C6F-9D2A-FAD2ED0C15E9

SEPI
ENGINEERING & CONSTRUCTION
1025 Wade Avenue
Raleigh, NC 27605
Tel:919-789-9977
Fax:919-789-9591
License: C-2197

| PROJECT REFERENCE NO. | SHEET NO. |
|---|---|
| B-5739 | UC-3 |
| DESIGNED BY: JB | |
| DRAWN BY: TD | |
| CHECKED BY: KH | |
| APPROVED BY: | |
| REVISED: | |
| NORTH CAROLINA DEPARTMENT OF TRANSPORTATION | |
| UTILITIES ENGINEERING SEC. PHONE:(919)707-6690 FAX:(919)250-4151 | UTILITY CONSTRUCTION PLANS ONLY |

NORTH CAROLINA PROFESSIONAL SEAL 22060 ENGINEER KELLY E. HAYES
Kelly E. Hayes
5/24/2017

UTILITY CONSTRUCTION

# UTILITY CONSTRUCTION

## GENERAL NOTES:

1. THE PROPOSED UTILITY CONSTRUCTION SHALL MEET THE APPLICABLE REQUIREMENTS OF THE NC DEPARTMENT OF TRANSPORTATION'S "STANDARD SPECIFICATIONS FOR ROADS AND STRUCTURES" DATED JANUARY 2012.

2. THE EXISTING UTILITIES BELONG TO THE TOWN OF RAMSEUR (UTILITY OWNER).

3. ALL WATER LINES TO BE INSTALLED WITHIN COMPLIANCE OF THE RULES AND REGULATIONS OF THE NORTH CAROLINA DEPARTMENT OF ENVIRONMENTAL QUALITY, DIVISION OF WATER RESOURCES, PUBLIC WATER SUPPLY SECTION. ALL SEWER LINES TO BE INSTALLED WITHIN COMPLIANCE OF THE RULES AND REGULATIONS OF THE NORTH CAROLINA DEPARTMENT OF ENVIRONMENT QUALITY, DIVISION OF WATER RESOURCES, WATER QUALITY SECTION. PERFORM ALL WORK IN ACCORDANCE WITH THE APPLICABLE PLUMBING CODES.

4. THE UTILITY OWNER OWNS THE EXISTING UTILITY FACILITIES AND WILL OWN THE NEW UTILITY FACILITIES AFTER ACCEPTANCE BY THE DEPARTMENT. THE DEPARTMENT OWNS THE CONSTRUCTION CONTRACT AND HAS ADMINISTRATIVE AUTHORITY. COMMUNICATIONS AND DECISIONS BETWEEN THE CONTRACTOR AND UTILITY OWNER ARE NOT BINDING UPON THE DEPARTMENT OR THIS CONTRACT UNLESS AUTHORIZED BY THE ENGINEER. AGREEMENTS BETWEEN THE UTILITY OWNER AND CONTRACTOR FOR THE WORK THAT IS NOT PART OF THIS CONTRACT OR IS SECONDARY TO THIS CONTRACT ARE ALLOWED, BUT ARE NOT BINDING UPON THE DEPARTMENT.

5. PROVIDE ACCESS FOR THE DEPARTMENT PERSONNEL AND THE OWNER'S REPRESENTATIVES TO ALL PHASES OF CONSTRUCTION. NOTIFY DEPARTMENT PERSONNEL AND THE UTILITY OWNER TWO WEEKS PRIOR TO COMMENCEMENT OF ANY WORK AND ONE WEEK PRIOR TO SERVICE INTERRUPTION. KEEP UTILITY OWNERS' REPRESENTATIVES INFORMED OF WORK PROGRESS AND PROVIDE OPPORTUNITY FOR INSPECTION OF CONSTRUCTION AND TESTING.

6. THE PLANS DEPICT THE BEST AVAILABLE INFORMATION FOR THE LOCATION, SIZE, AND TYPE OF MATERIAL FOR ALL EXISTING UTILITIES. MAKE INVESTIGATIONS FOR DETERMINING THE EXACT LOCATION, SIZE, AND TYPE MATERIAL OF THE EXISTING FACILITIES AS NECESSARY FOR THE CONSTRUCTION OF THE PROPOSED UTILITIES AND FOR AVOIDING DAMAGE TO EXISTING FACILITIES. REPAIR ANY DAMAGE INCURRED TO EXISTING FACILITIES TO THE ORIGINAL OR BETTER CONDITION AT NO ADDITIONAL COST TO THE DEPARTMENT.

7. MAKE FINAL CONNECTIONS OF THE NEW WORK TO THE EXISTING SYSTEM WHERE INDICATED ON THE PLANS, AS REQUIRED TO FIT THE ACTUAL CONDITIONS, OR AS DIRECTED.

8. MAKE CONNECTIONS BETWEEN EXISTING AND PROPOSED UTILITIES AT TIMES MOST CONVENIENT TO THE PUBLIC, WITHOUT ENDANGERING THE UTILITY SERVICE, AND IN ACCORDANCE WITH THE UTILITY OWNER'S REQUIREMENTS. MAKE CONNECTIONS ON WEEKENDS, AT NIGHT, AND ON HOLIDAYS IF NECESSARY.

9. ALL UTILITY MATERIALS SHALL BE APPROVED PRIOR TO DELIVERY TO THE PROJECT. SEE 1500-7, " SUBMITTALS AND RECORDS" IN SECTION 1500 OF THE STANDARD SPECIFICATIONS.

## PROJECT SPECIFIC NOTES:

1. PROPOSED WATER LINE FROM -L- LINE STATION 12+56 TO -L- LINE STATION 13+90 SHALL BE D.I.R.J. (DUCTILE IRON RESTRAINED JOINT) PIPE, PC 350.

2. PROPOSED FORCE MAIN FROM -L- LINE STATION 12+67 TO -L- LINE STATION 13+85 SHALL BE D.I.R.J. (DUCTILE IRON RESTRAINED JOINT) PIPE, PC 350.

3. CONTRACTOR'S ATTENTION IS DIRECTED TO SECTIONS 102, 107, AND 1550 OF THE STANDARD SPECIFICATIONS CONCERNING TRENCHLESS INSTALLATION. IT IS CONTRACTOR'S RESPONSIBILITY TO HAVE BORE DESIGNED AND SEALED BY A LICENSED NORTH CAROLINA PROFESSIONAL ENGINEER. NO DAMAGE IS ALLOWED TO RIVER, WETLANDS, OR BUFFER ZONES.

4. ALL MATERIALS AND CONSTRUCTION SHALL BE IN ACCORDANCE WITH THE LATEST STANDARDS, SPECIFICATIONS AND STANDARD DETAILS/DRAWINGS OF UTILITY OWNERS.

5. CONTRACTOR SHALL OBTAIN THE LATEST STANDARDS, SPECIFICATIONS AND STANDARD DETAILS/DRAWINGS OF THE UTILITY OWNERS AND NCDOT.

6. THE CONTRACTOR SHALL COORDINATE ISOLATION OF THE EXISTING WATER MAIN AND EXISTING FORCE MAIN FOR TIE-INS WITH UTILITY OWNER. CALL GRANT CHEEK AT 336-824-8530. IF TEMPORARY SHUT DOWN OF UTILITY IS REQUIRED THE CONTRACTOR WILL COORDINATE THIS SHUT DOWN WITH UTILITY OWNERS IN A MANNER THAT IS MOST CONVENIENT FOR CUSTOMERS AND UTILITY OWNER.

7. THE CONTRACTOR SHALL KEEP ACCESS OPEN AND CLEAR TO THE EXISTING LIFT STATION AND ALLOW THE TOWN OF RAMSEUR ACCESS TO IT.

8. A BYPASS PLAN SEALED BY A NC PROFESSIONAL ENGINEER MUST BE SUBMITTED TO THE ENGINEER PRIOR TO PUMPING OPERATIONS TO COORDINATE WITH THE UTILITY OWNER. PUMPS SHOULD BE SIZED TO HANDLE THE PEAK DAILY FLOW (2.5 TIMES THE AVERAGE DAILY FLOW) FOR THE LINE OR AREA OF WORK. THE CONTRACTOR SHALL SECURE PUMPS FROM A PUMP SUPPLIER ACCORDING TO THE DETERMINED FLOW REQUIREMENTS. PUMPING OPERATIONS MUST BE MONITORED 24 HOURS A DAY FOR EACH DAY OF THE PUMPING OPERATION BY QUALIFIED PERSONNEL IN ORDER TO RESPOND TO PROBLEMS OR FAILURES. 100% REDUNDANCY IS REQUIRED FOR PUMPING OPERATIONS. IN ADDITION, BACKUP PUMPS ARE TO BE CONNECTED TO THE BYPASS FORCE MAIN TO FACILITATE IMMEDIATE USE UPON FAILURE OF THE PRIMARY PUMPS.

9. WET WELL AND VALVE VAULT:
THE EXISTING WET WELL AND VALVE VAULT SHALL BE ADJUSTED TO THE LINES, GRADES AND ELEVATIONS AS SHOWN ON THE PLANS OR AS AMENDED BY THE ENGINEER. THE WET WELL AND VALVE VAULT SHALL INCLUDE ALL THE STRUCTURES, MATERIALS, EQUIPMENT AND OTHER ITEMS SHOWN ON PLANS AND AS NECESSARY FOR A COMPLETE AND SATISFACTORY INSTALLATION. ITEMS NOT SPECIFICALLY COVERED IN THIS HEADING OF THE SPECIFICATIONS ARE SUBJECT TO REQUIREMENTS IN OTHER HEADINGS OF THESE SPECIFICATIONS AND THE DIRECTION AND APPROVAL OF THE TOWN OF RAMSEUR.
THE EXISTING WET WELL STRUCTURE IS A CIRCULAR PRE-CAST STRUCTURE AND THE EXISTING VALVE VAULT IS A SQUARE PRE-CAST STRUCTURE.
THE EXISTING WET WELL IS CIRCULAR IN CROSS-SECTION AND THE EXISTING VALVE VAULT IS SQUARE IN CROSS SECTION.
SECTIONAL JOINTS SHALL BE SEALED WITH BITUMASTIC COMPOUND AND CAULKING ON THE INTERIOR FACE.
CONTRACTOR TO FIELD VERIFY THE EXISTING WET WELL AND VALVE VAULT DIMENSIONS PRIOR TO ANY MATERIAL ORDERING AND CONSTRUCTION.
THE DRIVEWAY AND PARKING AREA SHALL BE GRAVELED WITH A MINIMUM OF 6-INCHES OF COMPACTED AGGREGATE BASE COURSE (CABC) AS SHOWN IN THE PLANS.

10. FORCE MAIN TESTING, INSPECTION, AND STARTUP:
THE RELOCATED FORCE MAIN SHALL BE FIELD TESTED FOR SATISFACTORY OPERATION AND IN ACCORDANCE WITH THE TOWN OF RAMSEUR AND NCDOT STANDARD SPECIFICATIONS. A TOWN OF RAMSEUR EMPLOYEE SHALL OPERATE THE EXISTING LIFT STATION TO FACILITATE THE FORCE MAIN TESTING.
INCLUDE THE FOLLOWING PERSONNEL AS A MINIMUM DURING TESTING:
-NCDOT REPRESENTATIVE
-TOWN OF RAMSEUR REPRESENTATIVE
-CONTRACTOR REPRESENTATIVE
INSPECTION AND TESTING DOCUMENTATION. AFTER ALL INSPECTION AND TESTS HAVE BEEN SUCCESSFULLY ACCOMPLISHED, PROVIDE TWO SETS OF INSPECTION RECORDS, RECORD DRAWINGS, SHOP DRAWINGS, TEST RESULTS, ETC.

5/14/99
5/24/2017
...\B5739_ut_notes_UC03_psh.dgn
USER:tdavis

DocuSign Envelope ID: 020E77C2-D87B-4C6F-9D2A-FAD2ED0C15E9

5/14/99

# PROJECT TYPICAL DETAILS

SEPI ENGINEERING & CONSTRUCTION
1025 Wade Avenue
Raleigh, NC 27605
Tel:919-789-9977
Fax:919-789-9591
License: C-2197

| PROJECT REFERENCE NO. | SHEET NO. |
|---|---|
| B-5739 | UC-3A |

DESIGNED BY: JB
DRAWN BY: TD
CHECKED BY: KH
APPROVED BY:
REVISED:

NORTH CAROLINA DEPARTMENT OF TRANSPORTATION

UTILITIES ENGINEERING SEC.
PHONE:(919)707-6690
FAX:(919)250-4151

SEAL 047080 NORTH CAROLINA PROFESSIONAL ENGINEER KELLY E. HAYES
Kelly E. Hayes
DOCUSIGNED BY:
5/14/2017

UTILITY CONSTRUCTION PLANS ONLY

## UTILITY CONSTRUCTION

### THRUST BLOCKING DETAIL

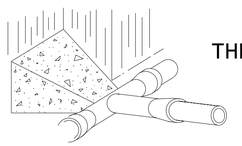

TEE INTERSECTION

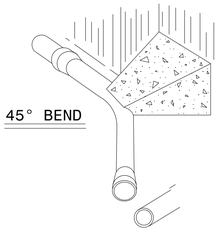

45° BEND

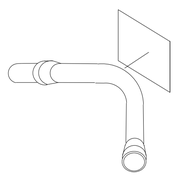

THRUST BLOCK AREA

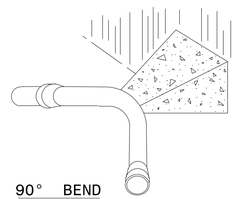

90° BEND

NOTES:
1. CONCRETE SHALL BE 3000 PSI
2. CONCRETE SHALL NOT CONTACT BOLTS OR ENDS OF MECHANICAL JOINT FITTINGS.
3. TRENCHES SHALL CONFORM TO THE TRENCH DETAIL.
4. SEE STANDARD THRUST BLOCK TABLE.
5. ALL BENDS AND INTERSECTIONS SHALL HAVE CONCRETE THRUST BLOCKING.

### TRENCH DETAIL

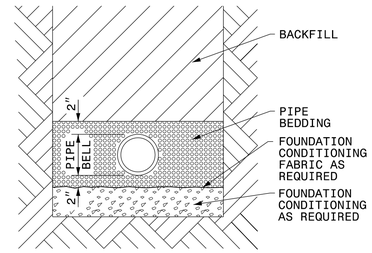


PLACE FOUNDATION CONDITIONING MATERIAL BELOW BEDDING IF REQUIRED, AS DIRECTED BY ENGINEER. PIPE BEDDED IN SELECT MATERIAL, CLASS II (TYPE 1) OR CLASS III. TRENCH BACKFILLED IN LOOSE 6" LAYERS COMPACTED TO TOP OF TRENCH USING LOCAL EXCAVATED MATERIAL IF APPROVED BY THE ENGINEER, OR SELECT MATERIAL. ALL MATERIAL SHALL BE FREE OF ROCKS, FOREIGN MATERIAL, AND FROZEN EARTH. COMPACTION SHALL BE TO APPROXIMATELY 95% DENSITY IN ACCORDANCE WITH AASHTO T-99 AS MODIFIED BY THE DEPARTMENT OF TRANSPORTATION.

### REACTION BEARING AREAS FOR HORIZONTAL WATER PIPE BENDS

BASED ON TEST PRESSURE OF 200 P.S.I.

ALL AREAS GIVEN IN SQUARE FEET.

| SIZE AND DEGREE OF BEND | STATIC THRUST IN POUNDS | MODERATELY DRY CLAY 4000 LBS/FT² | SOFT CLAY 2000 LBS/FT² | 1600 LBS/FT² GRAVEL / COARSE SAND | 8000 LBS/FT² DRY CLAY - ALWAYS DRY | SAND COMPACT FIRM 8000 LBS/FT² | SAND - CLEAN DRY 4000 LBS/FT² | SOFT 1000 LBS/FT² QUICKSAND - VERY POOR | ROCK - POOR 10,000 LBS/FT² |
|---|---|---|---|---|---|---|---|---|---|
| 6" | | | | | | | | | |
| 11 1/4° | 1,108 | 1 | 1 | 1 | 1 | 1 | 1 | 2 | 1 |
| 22 1/2° | 2,207 | 1 | 2 | 2 | 1 | 1 | 1 | 3 | 1 |
| 45° | 4,328 | 2 | 3 | 3 | 1 | 1 | 2 | 5 | 1 |
| 90° | 7,996 | 2 | 4 | 5 | 1 | 1 | 2 | 8 | 1 |
| PLUG | 5,655 | 2 | 3 | 4 | 1 | 1 | 2 | 6 | 1 |
| 8" | | | | | | | | | |
| 11 1/4° | 1,970 | 1 | 1 | 2 | 1 | 1 | 1 | 2 | 1 |
| 22 1/2° | 3,922 | 1 | 2 | 3 | 1 | 1 | 1 | 4 | 1 |
| 45° | 7,694 | 2 | 4 | 5 | 1 | 1 | 2 | 8 | 1 |
| 90° | 14,215 | 4 | 8 | 9 | 2 | 2 | 4 | 15 | 2 |
| PLUG | 10,053 | 3 | 5 | 6 | 2 | 2 | 3 | 10 | 1 |
| 12" | | | | | | | | | |
| 11 1/4° | 4,433 | 2 | 3 | 3 | 1 | 1 | 2 | 5 | 1 |
| 22 1/2° | 8,826 | 3 | 5 | 6 | 2 | 2 | 3 | 9 | 1 |
| 45° | 17,312 | 5 | 9 | 11 | 3 | 3 | 5 | 18 | 2 |
| 90° | 31,983 | 8 | 16 | 19 | 4 | 4 | 8 | 32 | 4 |
| PLUG | 22,619 | 6 | 12 | 14 | 3 | 3 | 6 | 23 | 3 |
| 16" | | | | | | | | | |
| 11 1/4° | 7,881 | 2 | 4 | 5 | 1 | 1 | 2 | 8 | 1 |
| 22 1/2° | 15,691 | 4 | 8 | 10 | 2 | 2 | 4 | 16 | 2 |
| 45° | 30,779 | 8 | 16 | 19 | 4 | 4 | 8 | 31 | 4 |
| 90° | 56,861 | 15 | 29 | 35 | 8 | 8 | 15 | 57 | 6 |
| PLUG | 40,213 | 10 | 21 | 25 | 5 | 5 | 10 | 41 | 5 |

REACTION BEARING AREAS ARE IN SQUARE FEET MEASURED IN A VERTICAL PLANE IN THE TRENCH SIDE AT AN ANGLE OF 90° TO THE THRUST VECTOR.

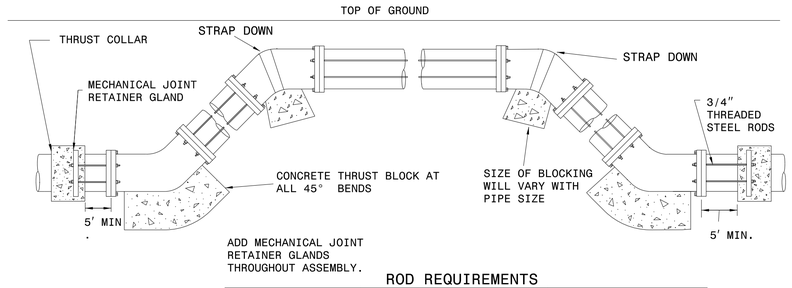


ADD MECHANICAL JOINT RETAINER GLANDS THROUGHOUT ASSEMBLY.

### ROD REQUIREMENTS

| SIZE OF 45 BEND | STATIC THRUST IN POUNDS | NO. OF RODS REQUIRED |
|---|---|---|
| 6" | 4,328 | 2 |
| 8" | 7,694 | 4 |
| 12" | 17,312 | 4 |
| 16" | 30,779 | 8 |
| 24" | 69,252 | 8 |

GENERAL NOTES:

1. STEEL RODS AND BOLTS SHALL BE 3/4" HOT DIPPED GALVANIZED.
2. CONCRETE SHALL NOT CONTACT BOLTS OR ENDS OF MECHANICAL JOINT BENDS.
3. RESTRAINED MECHANICAL GLANDS TO BE USED AT ALL FITTINGS.
4. MUST USE DUCTILE IRON EYE BOLTS WHERE NECESSARY.
5. ALL PIPING IN VERTICAL BENDS MUST BE DUCTILE IRON.
6. PIPE SHALL BE DUCTILE IRON A MINIMUM OF ONE JOINT IN EACH DIRECTION.
7. 3' MINIMUM COVER MUST BE MAINTAINED ON ALL FORCE MAINS

## STANDARD VERTICAL BEND DETAIL

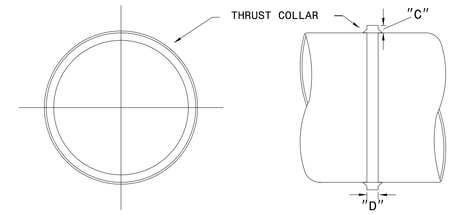


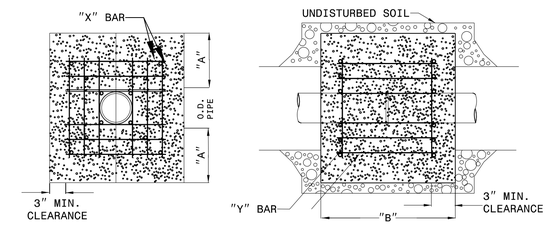


REINFORCING REQUIREMENTS

| I.D. PIPE | REBAR SIZE | "X" BAR LENGTH | "X" BAR WEIGHT | "Y" BAR LENGTH | "Y" BAR WEIGHT | NO. REQUIRED |
|---|---|---|---|---|---|---|
| 6" - 36" | #5 | 2'-2"+ O.D. PIPE | 1.043 LBS/FT | 1'-1" | 1.1 LBS. EACH | X-24, Y-12 |
| 48" & greater | #6 | 3'-0"+ O.D. PIPE | 1.502 LBS/FT | 1'-3" | 1.9 LBS. EACH | X-24, Y-12 |

THRUST COLLAR, AND THRUST SCHEDULE

| I.D. PIPE | "A" | "B" | "C" | "D" |
|---|---|---|---|---|
| 6" - 16" | 1'-4" | 1'-7" | 2" | 3/8" |
| 20" - 24" | 1'-4" | 1'-7" | 3" | 1/2" |
| 30" - 36" | 1'-4" | 1'-7" | 4" | 5/8" |
| 48" & greater | 1'-8" | 1'-9" | 6" | 7/8" |

NOTES:
1. CONCRETE SHALL BE 3000 PSI AND TRANSIT MIXED.
2. REINFORCING BARS SHALL BE DEFORMED AND TIED TOGETHER.
3. TRENCH BOTTOM WIDTH IN VICINITY OF THRUST BLOCK INSTALLATION SHALL BE THE MINIMUM WIDTH OF 6".
4. BACKFILL TAMPED IN 6" LIFTS.
5. THRUST COLLAR MUST BE FACTORY WELDED ON BOTH SIDES ALONG BOTH EDGES OF COLLAR AROUND CIRCUMFERENCE.

## THRUST COLLAR DETAIL

5/4/2017
R:\Roadway\Proj\B5739_Ut_dtl_UC03A_psh.dgn
kaHayes

DocuSign Envelope ID: 020E77C2-D87B-4C6F-9D2A-FAD2ED0C15E9

SEPI
ENGINEERING & CONSTRUCTION
1025 Wade Avenue
Raleigh, NC 27605
Tel:919-789-9977
Fax:919-789-9591
License: C-2197

| PROJECT REFERENCE NO. | SHEET NO. |
|---|---|
| B-5739 | UC-4 |
| DESIGNED BY: JB | |
| DRAWN BY: TD | |
| CHECKED BY: KH | |
| APPROVED BY: | |
| REVISED: | |
| NORTH CAROLINA DEPARTMENT OF TRANSPORTATION | |
| UTILITIES ENGINEERING SEC. PHONE:(919)707-6690 FAX:(919)250-4151 | UTILITY CONSTRUCTION PLANS ONLY |

NORTH CAROLINA PROFESSIONAL SEAL 042080 ENGINEER KELLY E. HAIRE
DocuSigned by: Kelly E. Haire
5/4/2017

# UTILITY CONSTRUCTION

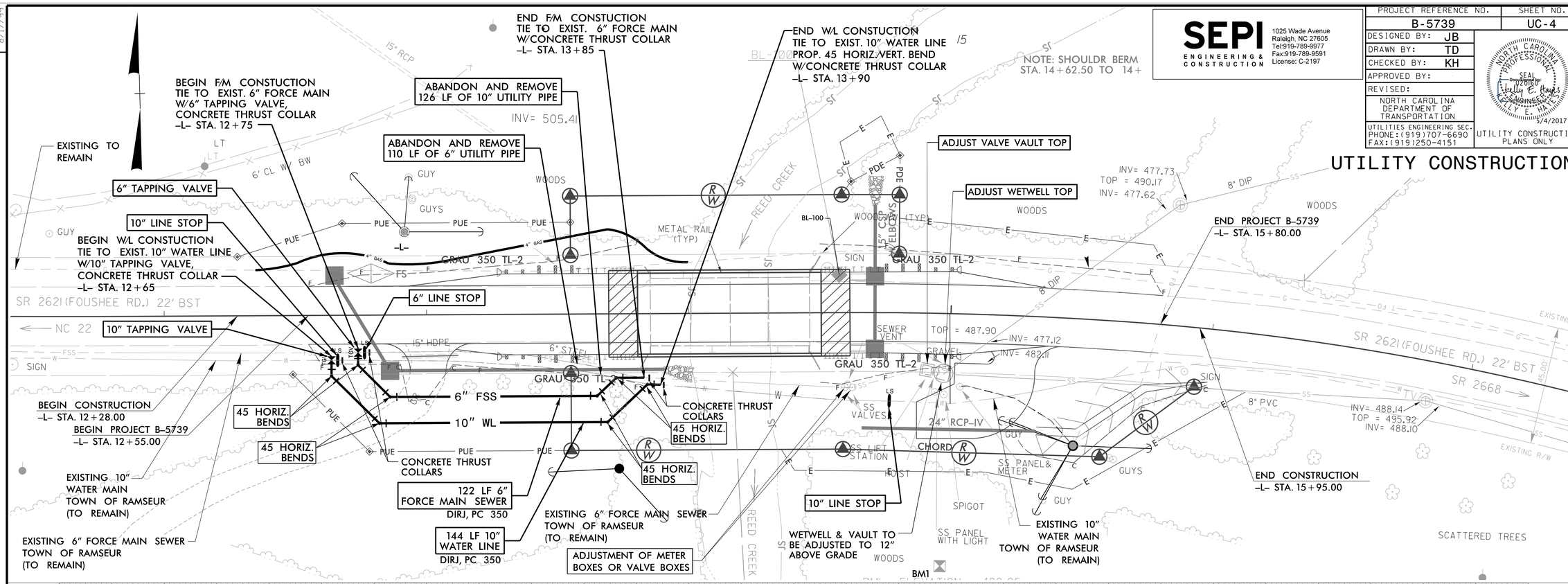


GRAPHIC SCALES
PLANS 20 10 0 20 40
PROFILE (HORIZONTAL) 20 10 0 20 40
PROFILE (VERTICAL) 10 5 0 10 20

THE ESTIMATED QUANTITY OF DUCTILE IRON WATER PIPE FITTINGS ON THIS PLAN SHEET IS 930 POUNDS. THE ACTUAL QUANTITY AND TYPE OF FITTINGS WILL VARY BASED ON FIELD CONDITIONS.

THE ESTIMATED QUANTITY OF DUCTILE IRON SEWER PIPE FITTINGS ON THIS PLAN SHEET IS 450 POUNDS. THE ACTUAL QUANTITY AND TYPE OF FITTINGS WILL VARY BASED ON FIELD CONDITIONS.

NOTE: CONTRACTOR TO LOCATE AND VERIFY IN FIELD THE LOCATION AND ELEVATIONS OF THE EXISTING WATER AND FORCE MAIN LINES PRIOR TO ANY CONSTRUCTION.

REVISIONS

8/17/99

5/4/2017
B-5739_Ut_rdy4_UC04_psh.dgn
[SEPI Prod]

| T.I.P. NO. | SHEET NO. |
|---|---|
| B–5739 | UO–1 |

PROJECT: B–5739

STATE OF NORTH CAROLINA
DIVISION OF HIGHWAYS

# UTILITY BY OTHERS PLANS
# RANDOLPH COUNTY

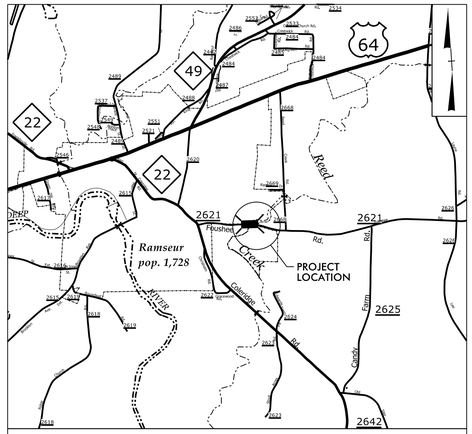


VICINITY MAP

**LOCATION: BRIDGE NO. 170 OVER REED CREEK ON S.R. 2621 (FOUSHEE ROAD)**

**TYPE OF WORK: ELECTRIC POWER DISTRIBUTION, TELEPHONE, CABLE TV**

NAD 83
NA 2011

TO NC 22

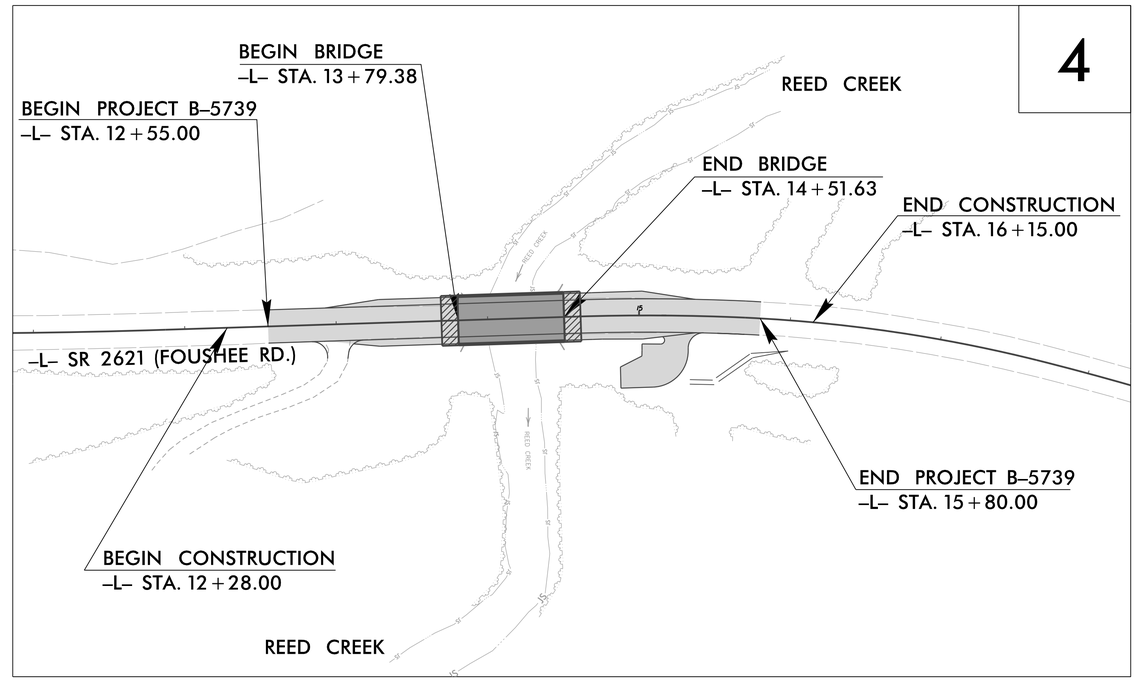


**GRAPHIC SCALES**

50 25 0 50 100
PLANS

50 25 0 50 100
PROFILE (HORIZONTAL)

10 5 0 10 20
PROFILE (VERTICAL)

**INDEX OF SHEETS**


| SHEET NO. | DESCRIPTION |
|---|---|
| UO–1 | TITLE SHEET |
| UO–2 | UTILITY SYMBOLOGY SHEET |
| UC–3 | UTILITY BY OTHERS SHEET |


**UTILITY OWNERS ON PROJECT**

(1) DUKE ENERGY – POWER (DISTRIBUTION)
(2) CENTURYLINK – COMMUNICATIONS
(3) CHARTER COMMUNICATIONS (AKA TIME WARNER CABLE) – COMMUNICATIONS
(4) PIEDMONT NATURAL GAS – GAS (DISTRIBUTION)
(5) TOWN OF RAMSEUR – WATER DISTRIBUTION
(6) TOWN OF RAMSEUR – SANITARY SEWER COLLECTION
(7) TOWN OF RAMSEUR – LIFT STATION AND FORCE MAIN


SEPI ENGINEERING & CONSTRUCTION
1025 Wade Avenue
Raleigh, NC 27605
Tel:919-789-9977
Fax:919-789-9591
License: C-2197

Tim Welch, PE — DIVISION 8 BRIDGE MANAGER
Jamie Yow — DIVISION 8 UTILITY COORDINATOR
Kelly Hayes, PE, PLS — UTILITIES COORDINATION CONSULTANT



09/08/99
5/4/2017
::\Proj\B-5739_Ut_tsh_U01_psh.dgn
USER:tfreal

STATE OF NORTH CAROLINA
DIVISION OF HIGHWAYS

SEPI ENGINEERING & CONSTRUCTION
1025 Wade Avenue
Raleigh, NC 27605
Tel:919-789-9977
Fax:919-789-9591
License: C-2197

| PROJECT REFERENCE NO. | SHEET NO. |
|---|---|
| B-5739 | U0-2 |

UTILITIES BY OTHERS

NOTE:
ALL PROPOSED UTILITY WORK SHOWN ON THIS SHEET WILL BE DONE BY OTHERS

# UTILITIES PLAN SHEET SYMBOLS

## PROPOSED WATER SYMBOLS

- Water Line (Sized as Shown)
- 11¼ Degree Bend
- 22½ Degree Bend
- 45 Degree Bend
- 90 Degree Bend
- Plug
- Tee
- Cross
- Reducer
- Gate Valve (GV)
- Butterfly Valve (BV)
- Tapping Valve (TGV)
- Line Stop (LS)
- Line Stop with Bypass (LS/BP)
- Blow Off (BO)
- Fire Hydrant (PFH)
- Relocate Fire Hydrant (RFH)
- Remove Fire Hydrant (REM FH)
- Water Meter (PWM)
- Relocate Water Meter (RWM)
- Remove Water Meter (REM WM)
- Water Pump Station (PS(W))
- RPZ Backflow Preventer (PRPZ)
- DCV Backflow Preventer (PBFP)
- Relocate RPZ Backflow Preventer (RRPZ)
- Relocate DCV Backflow Preventer (RBFP)

## PROPOSED SEWER SYMBOLS

- Gravity Sewer Line (Sized as Shown)
- Force Main Sewer Line (Sized as Shown)
- Manhole (Sized per Note)
- Sewer Pump Station (PS(SS))

## PROPOSED MISCELLANOUS UTILITIES SYMBOLS

- Power Pole
- Telephone Pole
- Joint Use Pole
- Telephone Pedestal (TEL PED)
- Utility Line by Others (Type as Shown)
- Trenchless Installation
- Encasement by Open Cut
- Encasement
- Thrust Block
- Air Release Valve (AR)
- Utility Vault (UV)
- Concrete Pier (CP)
- Steel Pier (SP)
- Plan Note — NOTE
- Pay Item Note — PAY ITEM

## EXISTING UTILITIES SYMBOLS

- Power Pole
- Telephone Pole
- Joint Use Pole
- Utility Pole
- Utility Pole with Base
- H-Frame Pole
- Power Transmission Line Tower
- Water Manhole
- Power Manhole
- Telephone Manhole
- Sanitary Sewer Manhole
- Hand Hole for Cable
- Power Transformer
- Telephone Pedestal
- CATV Pedestal
- Gas Valve
- Gas Meter
- Located Miscellaneous Utility Object
- Abandoned According to Utility Records — AATUR
- End of Information — E.O.I.
- *Underground Power Line
- *Underground Telephone Cable
- *Underground Telephone Conduit
- *Underground Fiber Optics Telephone Cable
- *Underground TV Cable
- *Underground Fiber Optics TV Cable
- *Underground Gas Pipeline
- Aboveground Gas Pipeline — A/G Gas
- *Underground Water Line
- Aboveground Water Line — A/G Water
- *Underground Gravity Sanitary Sewer Line
- Aboveground Gravity Sanitary Sewer Line — A/G Sanitary Sewer
- *Underground SS Forced Main Line
- Underground Unknown Utility Line
- SUE Test Hole
- Water Meter
- Water Valve
- Fire Hydrant
- Sanitary Sewer Cleanout

*For Existing Utilities

- Utility Line Drawn from Record (Type as Shown)
- Designated Utility Line (Type as Shown)

REV: 2/1/2012

5/14/99

E04/2017
...\B-5739_Ut_sym_U02.dgn
1:5PM

| PROJECT REFERENCE NO. | SHEET NO. |
|---|---|
| B-5739 | U0-3 |
| R/W SHEET NO. | |
| ROADWAY DESIGN ENGINEER | HYDRAULICS ENGINEER |

# UTILITIES BY OTHERS


SEPI ENGINEERING & CONSTRUCTION
1025 Wade Avenue
Raleigh, NC 27605
Tel:919-789-9977
Fax:919-789-9591
License: C-2197


NOTE:
ALL PROPOSED UTILITY WORK SHOWN ON THIS SHEET WILL BE DONE BY OTHERS

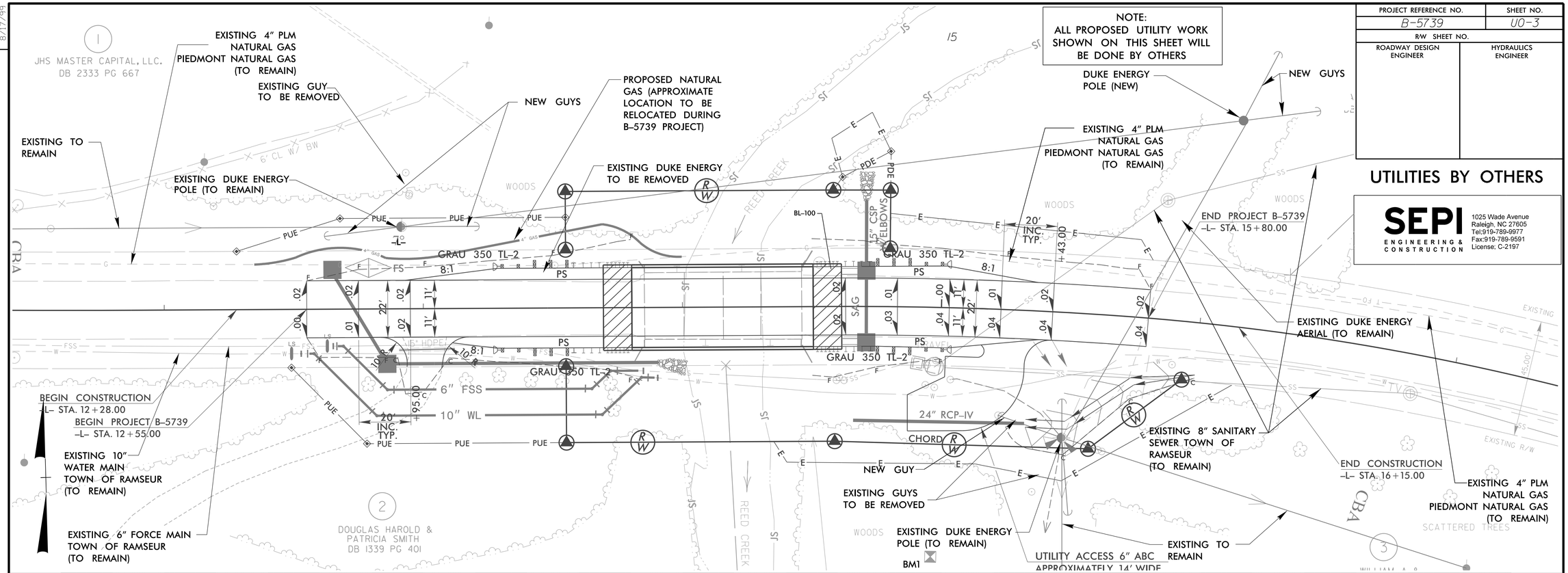


BM #1
Sta. 20+27.00
OFF 103' RT
ELEV. 488.05'
R/R SPIKE IN 12" GUM

-L-
Sta. 14+97.78
OFF 96.32' LT

NOTE:
CONTRACTOR TO COOPERATE WITH PIEDMONT NATURAL GAS DURING THE NATURAL GAS LINE RELOCATION.
CONTRACTOR TO GRADE NORTH SHOULDER/DITCH BETWEEN STA. 12+35 TO STA. 13+70 PRIOR TO NATURAL GAS LINE RELOCATION AND PRIOR TO PILE DRIVING.

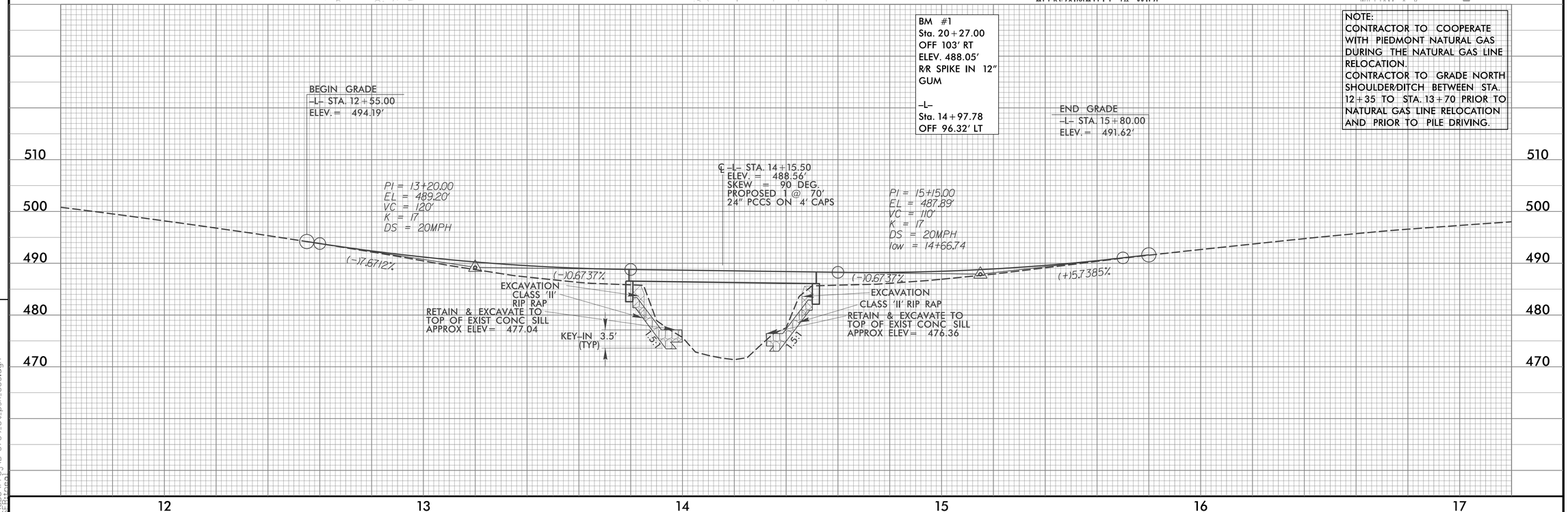


REVISIONS

8/17/99

5/4/2017
r:\Proj\B-5739_Ut_psh_U03.dgn
(USERnamel)

# STATE OF NORTH CAROLINA
# DIVISION OF HIGHWAYS

| PROJ. REFERENCE NO. | SHEET NO. |
|---|---|
| B-5739 | X-1 |

**Approximate quantities only. Unclassified excavation, borrow excavation, fine grading, clearing and grubbing, and removal of existing pavement will be paid for at the lump sum price for "Grading".**

NOTE: EMBANKMENT COLUMN DOES NOT INCLUDE BACKFILL FOR UNDERCUT

## *CROSS-SECTION SUMMARY*

| Station<br>L | Uncl. Exc.<br>(cu. yd.) | Embt<br>(cu. yd.) |
|---|---|---|
| 12+55.00 | 0 | 0 |
| 12+75.00 | 2 | 0 |
| 13+00.00 | 13 | 1 |
| 13+25.00 | 11 | 15 |
| 13+50.00 | 0 | 44 |
| 13+75.00 | 0 | 79 |
| 13+79.38 | 0 | 17 |

| Station<br>L | Uncl. Exc.<br>(cu. yd.) | Embt<br>(cu. yd.) |
|---|---|---|
| 14+51.63 | 0 | 0 |
| 14+75.00 | 0 | 55 |
| 15+00.00 | 0 | 42 |
| 15+25.00 | 1 | 14 |
| 15+50.00 | 41 | 2 |
| 15+75.00 | 51 | 0 |
| 15+80.00 | 2 | 0 |

8/23/99

| 0 2.5 5 | PROJ. REFERENCE NO. | SHEET NO. |
|---|---|---|
| | B-5739 | X-2 |

SEPI
ENGINEERING & CONSTRUCTION
1025 Wade Avenue
Raleigh, NC 27605
Tel:919-789-9977
Fax:919-789-9591
License: C-2197

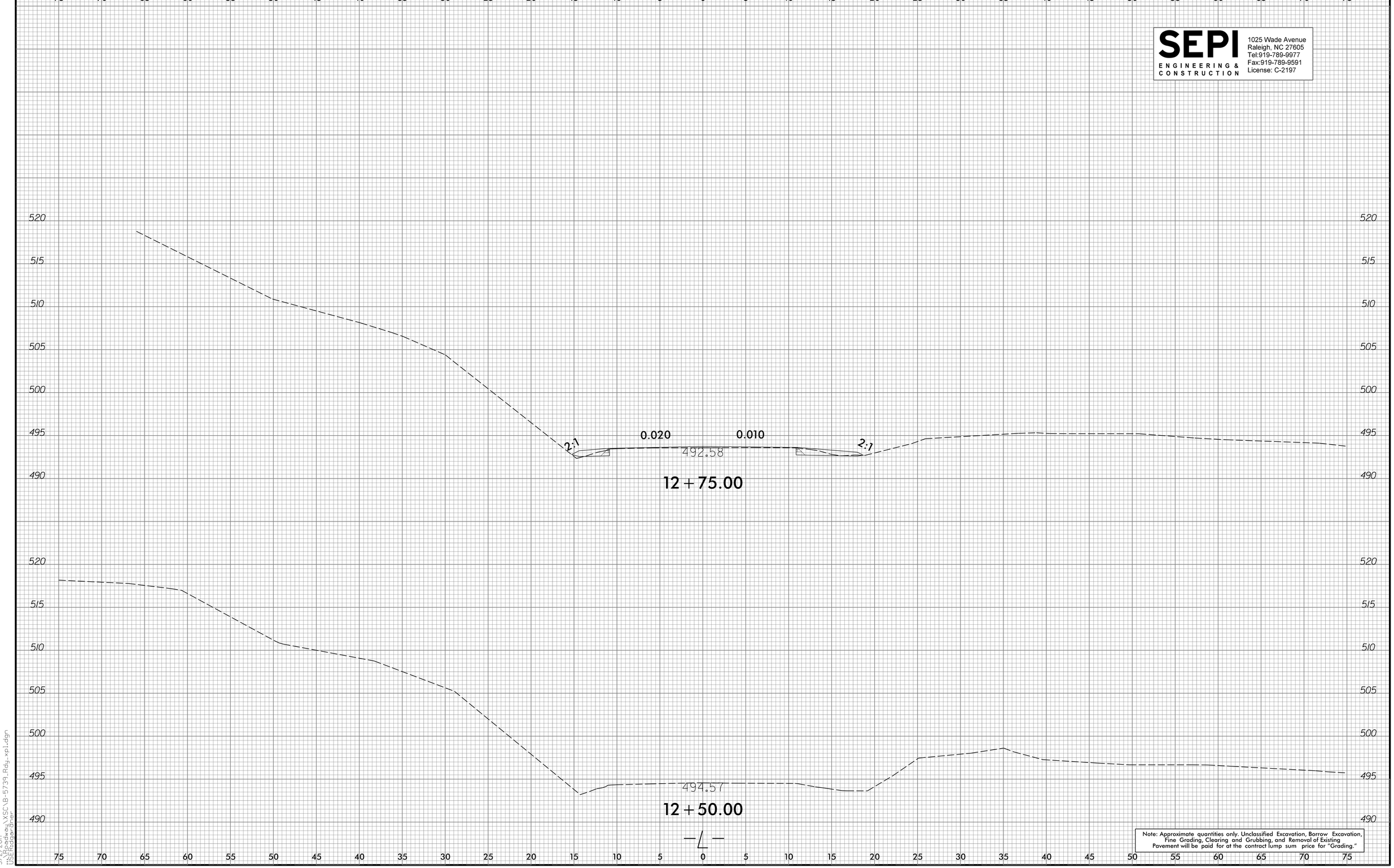


Note: Approximate quantities only. Unclassified Excavation, Borrow Excavation, Fine Grading, Clearing and Grubbing, and Removal of Existing Pavement will be paid for at the contract lump sum price for "Grading."

3/2/2017
I:\Roadway\XSC\B-5739_Rdy_xpl.dgn
USER:rdgardner

| 0 2.5 5 | PROJ. REFERENCE NO. | SHEET NO. |
|---|---|---|
| | B-5739 | X-3 |

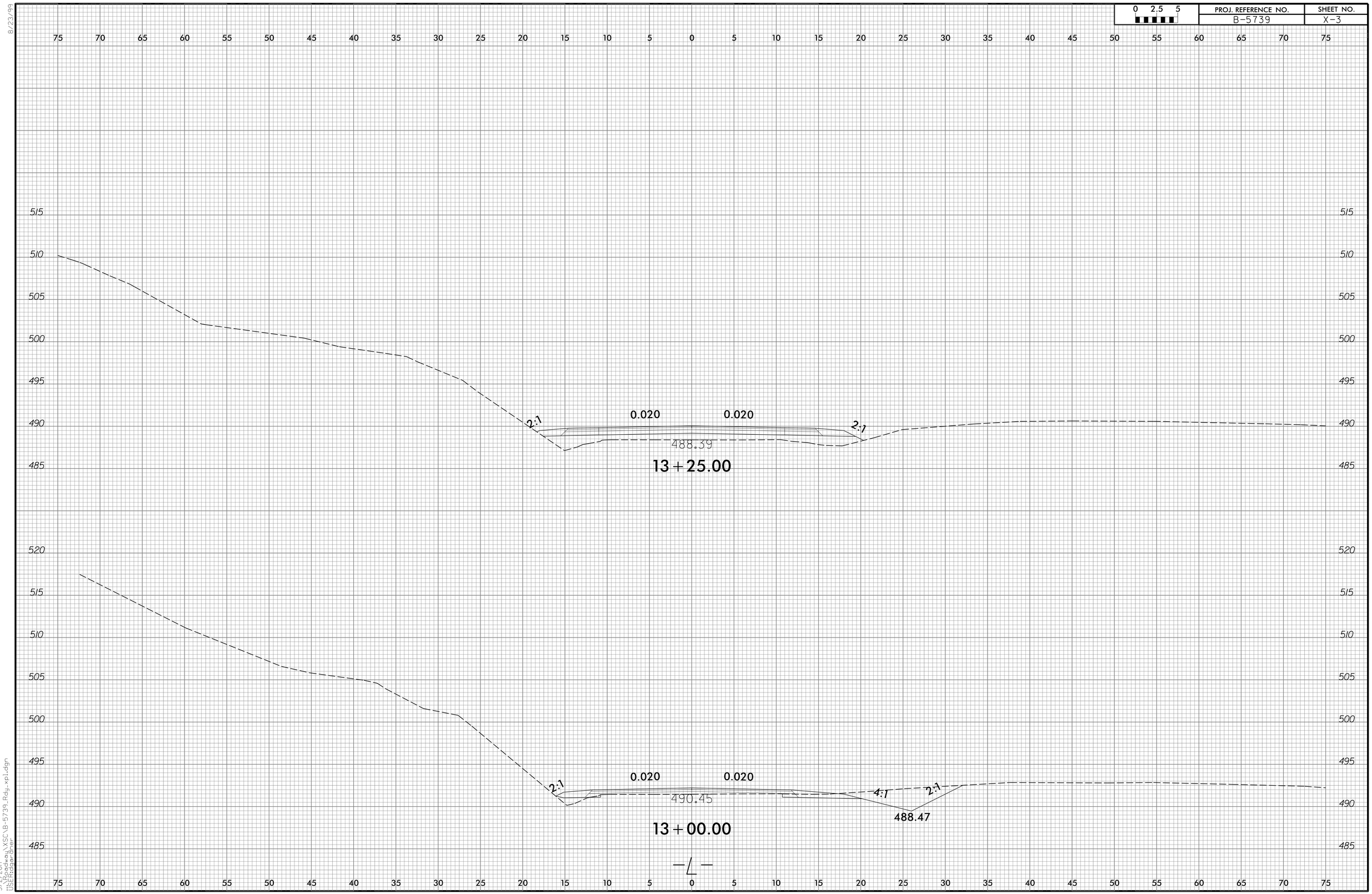


8/23/99

3/2/2017
:\Roadway\XSC\B-5739_Rdy_xpl.dgn
USER:Rdgardner

| 0 2.5 5 | PROJ. REFERENCE NO. | SHEET NO. |
|---|---|---|
| | B-5739 | X-4 |

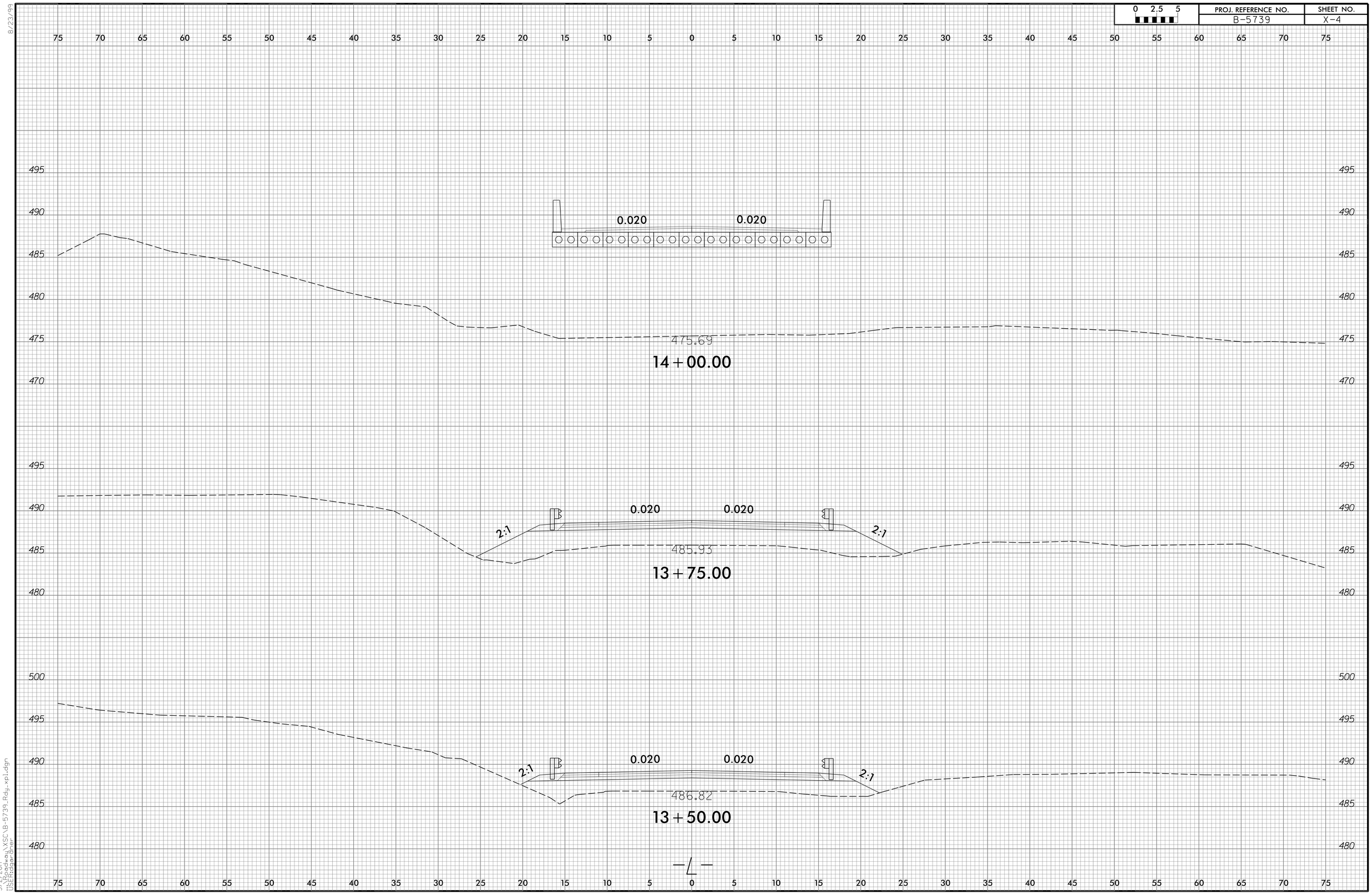


8/23/99

3/2/2017
:\Roadway\XSC\B-5739_Rdy_xpl.dgn
USER:Rdgardner

| 0 2.5 5 | PROJ. REFERENCE NO. | SHEET NO. |
|---|---|---|
| | B-5739 | X-5 |

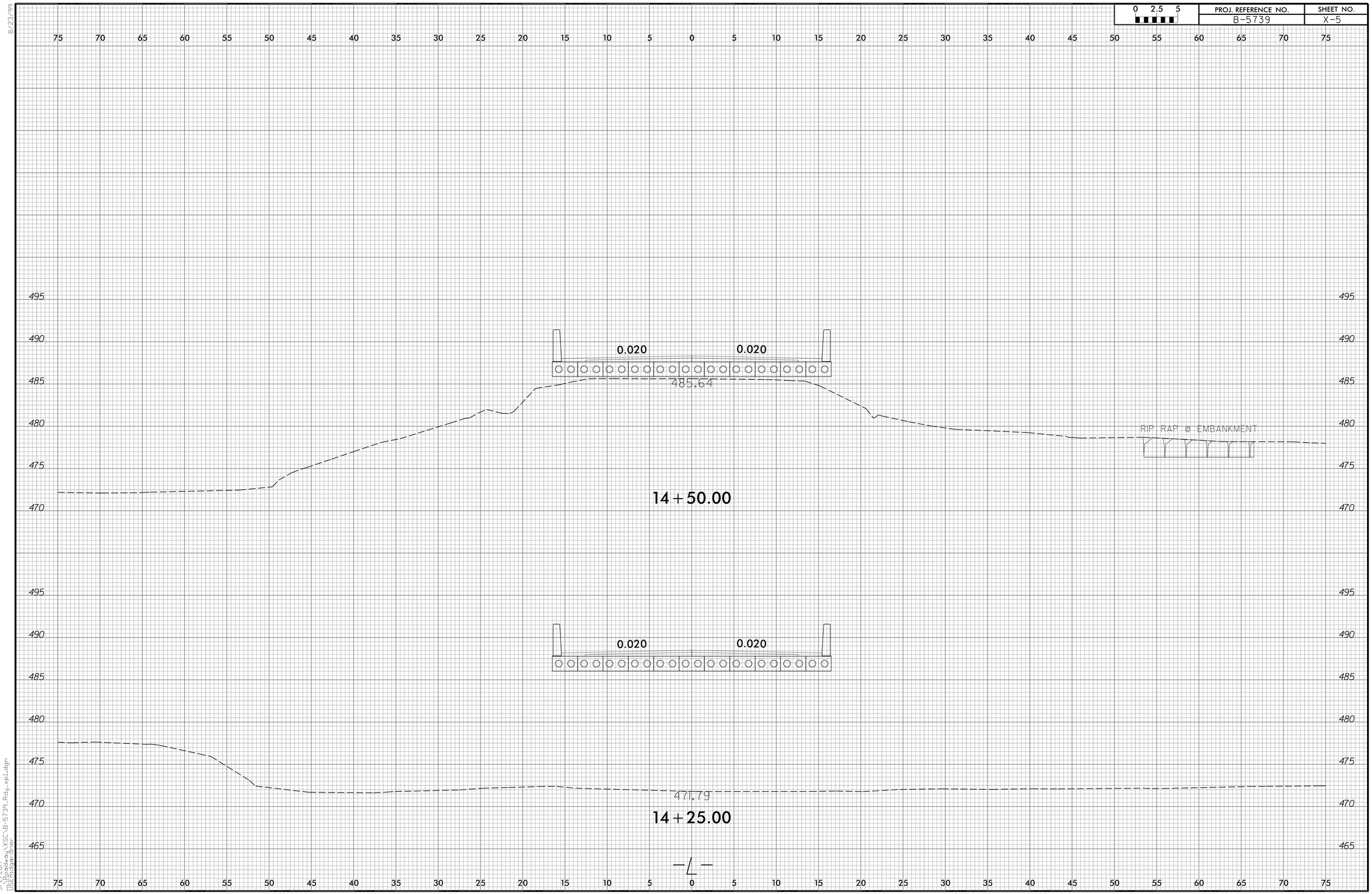


8/23/99

3/2/2017
:\Roadway\XSC\B-5739_Rdy_xpl.dgn
USER:Rdgardner

| 0 2.5 5 | PROJ. REFERENCE NO. | SHEET NO. |
|---|---|---|
| | B-5739 | X-6 |

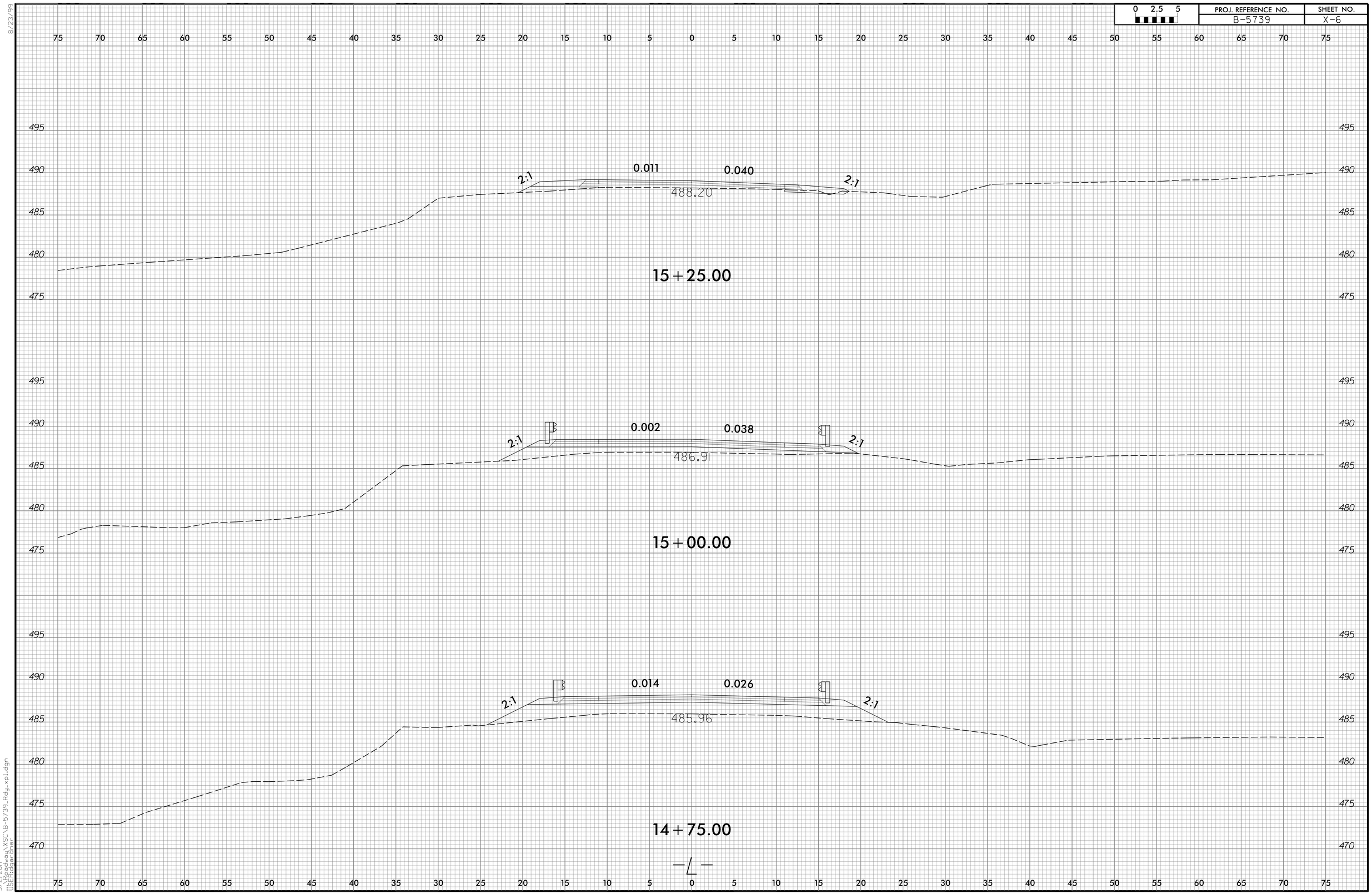


8/23/99

3/2/2017
:\Roadway\XSC\B-5739_Rdy_xpl.dgn
USER:Rdgardner

8/23/99

| 0 2.5 5 | PROJ. REFERENCE NO. | SHEET NO. |
|---|---|---|
| | B-5739 | X-7 |

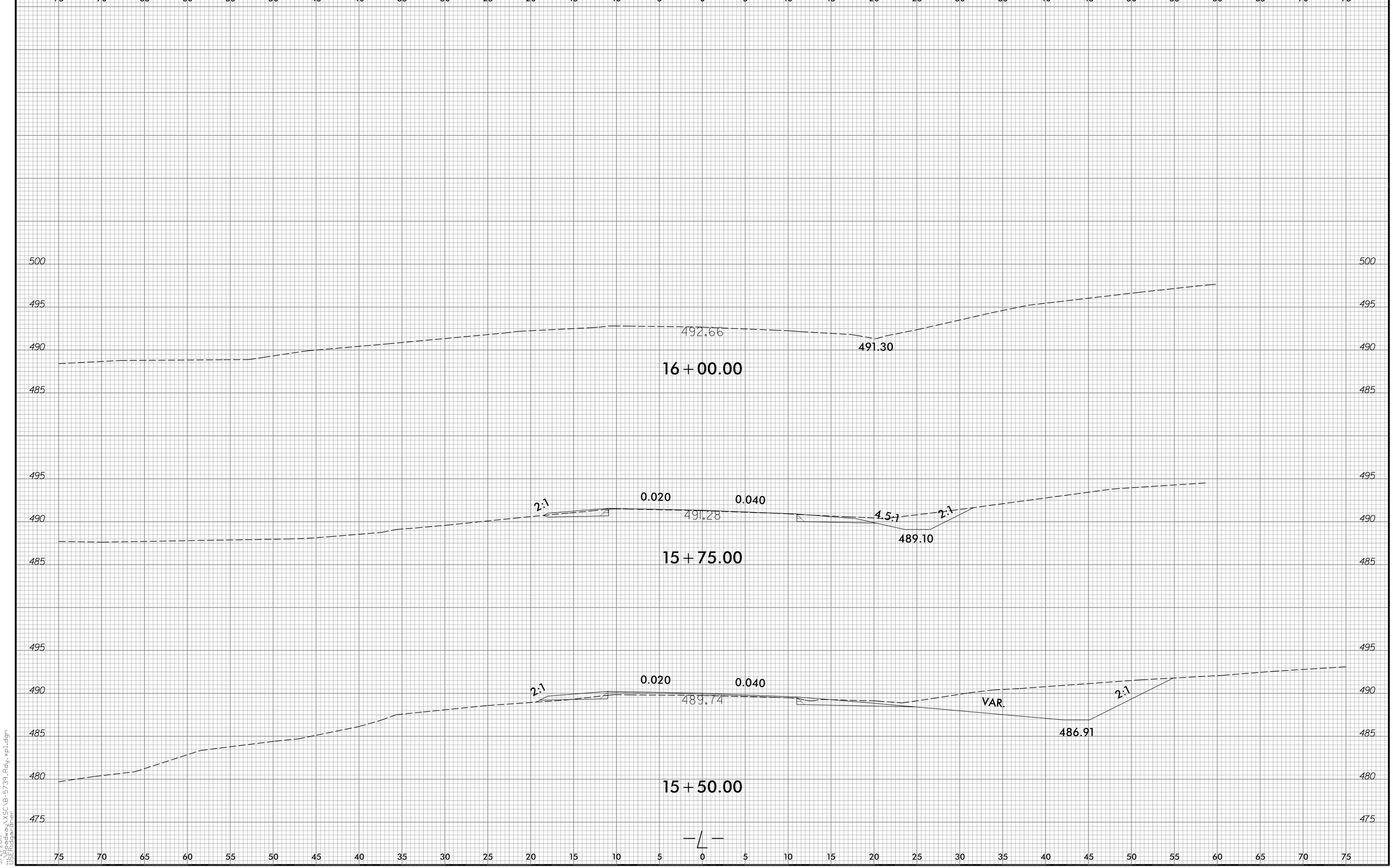


3/2/2017
:\Roadway\XSC\B-5739_Rdy_xpl.dgn
USER:Rdgardner

F. A. PROJECT: BRZ-2621(004)

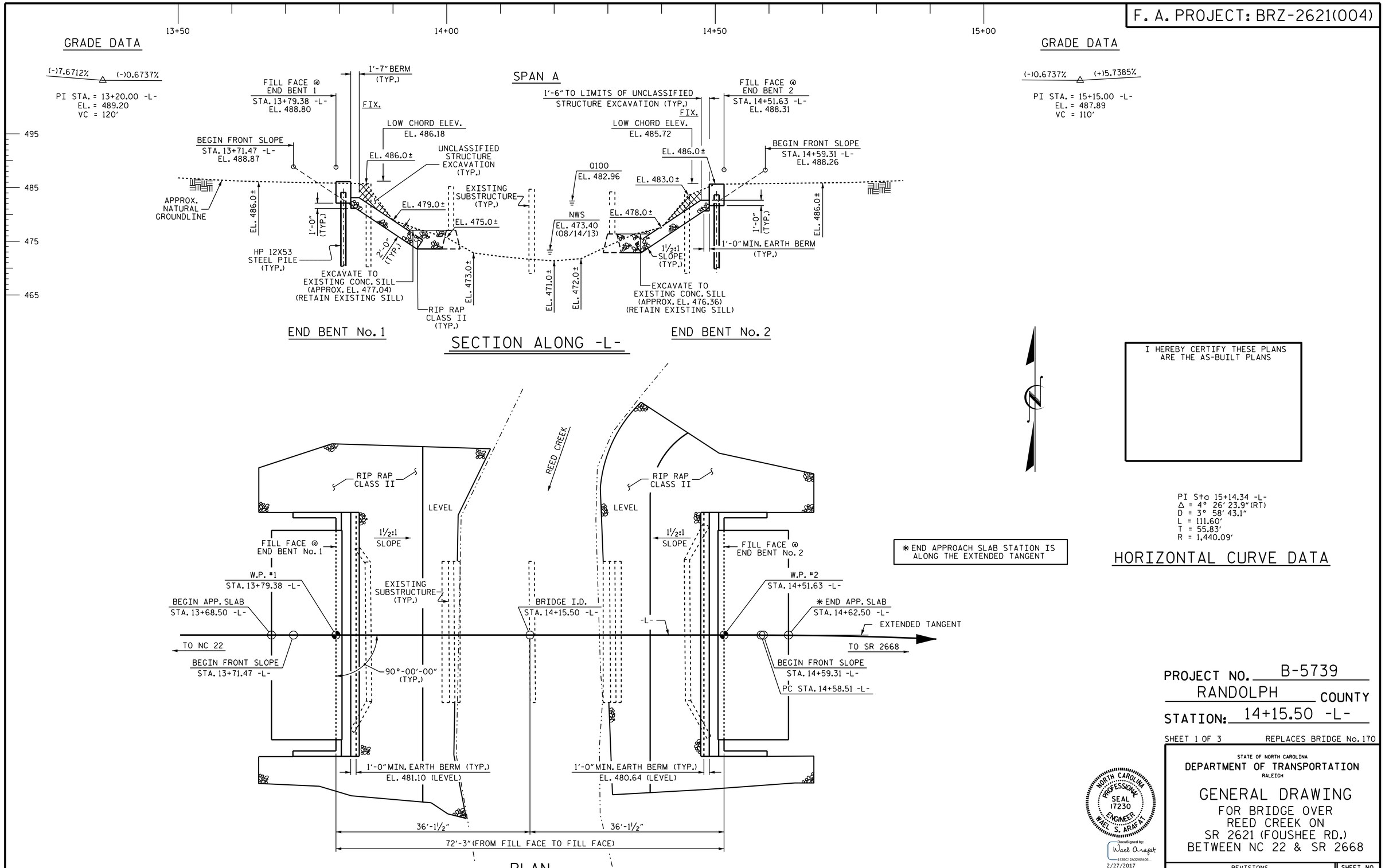


I HEREBY CERTIFY THESE PLANS ARE THE AS-BUILT PLANS

PI Sta 15+14.34 -L-
Δ = 4° 26' 23.9" (RT)
D = 3° 58' 43.1"
L = 111.60'
T = 55.83'
R = 1,440.09'

HORIZONTAL CURVE DATA

*END APPROACH SLAB STATION IS ALONG THE EXTENDED TANGENT

PROJECT NO. B-5739
RANDOLPH COUNTY
STATION: 14+15.50 -L-

SHEET 1 OF 3 REPLACES BRIDGE No. 170

STATE OF NORTH CAROLINA
DEPARTMENT OF TRANSPORTATION
RALEIGH

GENERAL DRAWING
FOR BRIDGE OVER
REED CREEK ON
SR 2621 (FOUSHEE RD.)
BETWEEN NC 22 & SR 2668

NORTH CAROLINA PROFESSIONAL SEAL 17230 ENGINEER WAEL S. ARAFAT

DocuSigned by: Wael Arafat
4139C12A32AB406...
2/27/2017

DOCUMENT NOT CONSIDERED FINAL UNLESS ALL SIGNATURES COMPLETED

| REVISIONS | | | | | | | | SHEET NO. |
|---|---|---|---|---|---|---|---|---|
| NO. | BY: | DATE: | NO. | BY: | DATE: | | | S-1 |
| 1 | | | 3 | | | | | TOTAL SHEETS |
| 2 | | | 4 | | | | | 14 |

DRAWN BY : M.K. BEARD DATE : 9/1/16
CHECKED BY : J.D. HAWK DATE : 9/28/16
DESIGN ENGINEER OF RECORD: A. SORENGINH DATE : 1/2017

23-FEB-2017 10:57
R:\Structures\Plans\FINAL PLANS\B5739_SMU_GD.dgn
tbarbour

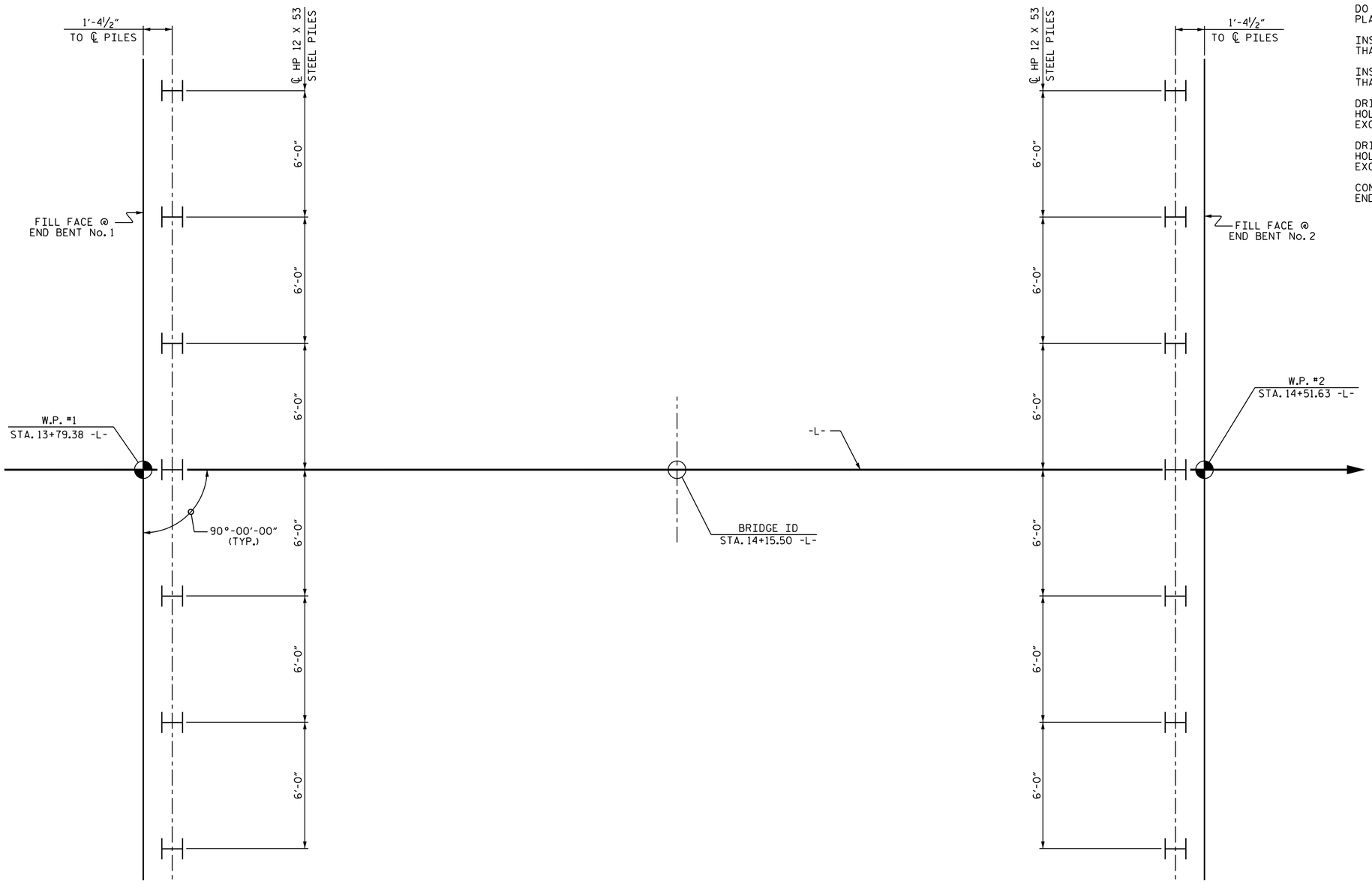


## FOUNDATION LAYOUT

DIMENSIONS ARE TO THE ℄ OF PILES

## NOTES

FOR PILES, SEE GEOTECHNICAL SPECIAL PROVISIONS AND SECTION 450 OF THE STANDARD SPECIFICATIONS.

PILES AT END BENT No. 1 AND END BENT No. 2 ARE DESIGNED FOR A FACTORED RESISTANCE OF 81 TONS PER PILE.

DO NOT DRIVE PILES AT END BENT No. 1 OR END BENT No. 2 AFTER PLACING PILES IN EXCAVATED HOLES.

INSTALL PILES AT END BENT No. 1 TO A TIP ELEVATION NO HIGHER THAN 472 FT.

INSTALL PILES AT END BENT No. 2 TO A TIP ELEVATION NO HIGHER THAN 470 FT.

DRILLED-IN PILES ARE REQUIRED FOR END BENT No. 1. EXCAVATE HOLES AT PILE LOCATIONS TO ELEVATION 470 FT. FOR PILE EXCAVATION, SEE SECTION 450 OF THE STANDARD SPECIFICATIONS.

DRILLED-IN PILES ARE REQUIRED FOR END BENT No. 2. EXCAVATE HOLES AT PILE LOCATIONS TO ELEVATION 465 FT. FOR PILE EXCAVATION, SEE SECTION 450 OF THE STANDARD SPECIFICATIONS.

CONCRETE IS REQUIRED TO FILL HOLES FOR PILE EXCAVATION AT END BENT No. 1 AND END BENT No. 2.

PROJECT NO. B-5739
RANDOLPH COUNTY
STATION: 14+15.50 -L-

SHEET 2 OF 3

STATE OF NORTH CAROLINA
DEPARTMENT OF TRANSPORTATION
RALEIGH

GENERAL DRAWING
FOR BRIDGE OVER
REED CREEK ON
SR 2621 (FOUSHEE RD.)
BETWEEN NC 22 & SR 2668

NORTH CAROLINA PROFESSIONAL SEAL 17230 ENGINEER WAEL S. ARAFAT

DocuSigned by: Wael Arafat
4139C12A32AB406...
2/27/2017

DOCUMENT NOT CONSIDERED FINAL UNLESS ALL SIGNATURES COMPLETED

| REVISIONS | | | | | | |
|---|---|---|---|---|---|---|
| NO. | BY: | DATE: | NO. | BY: | DATE: | |
| 1 | | | 3 | | | |
| 2 | | | 4 | | | |

SHEET NO. S-2
TOTAL SHEETS 14

| | | | |
|---|---|---|---|
| DRAWN BY : | M.K. BEARD | DATE : | 8/24/16 |
| CHECKED BY : | J.D. HAWK | DATE : | 9/28/16 |
| DESIGN ENGINEER OF RECORD: | A. SORENGINH | DATE : | 1/2017 |

17-FEB-2017 11:52
R:\Structures\Plans\FINAL PLANS\B5739_SMU_GD.dgn
tbarbour

BM #1: SPIKE IN 12" GUM TREE, 96.32' RT. OF STA. 14+97.98 -L-, EL. 488.05

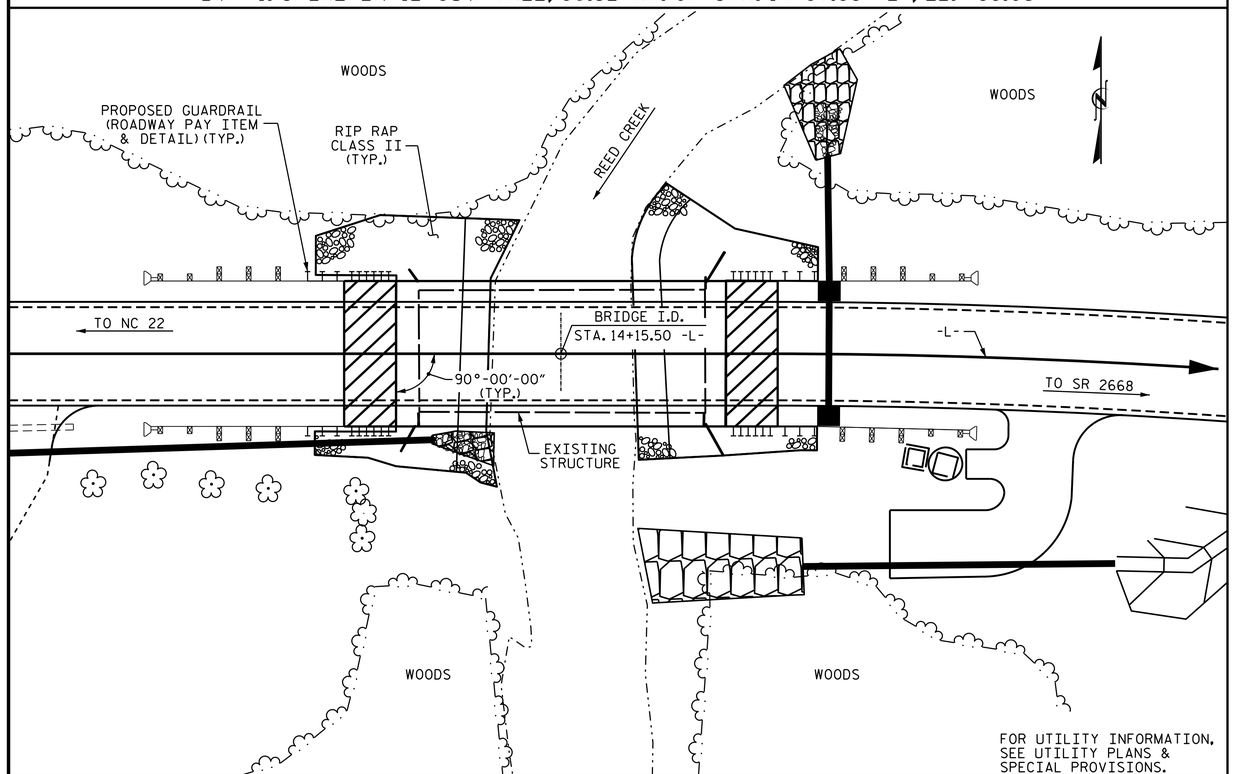


LOCATION SKETCH

# NOTES

ASSUMED LIVE LOAD = HL-93 OR ALTERNATE LOADING.

THIS BRIDGE HAS BEEN DESIGNED IN ACCORDANCE WITH THE AASHTO LRFD BRIDGE DESIGN SPECIFICATIONS.

THIS BRIDGE IS LOCATED IN SEISMIC ZONE 1.

FOR OTHER DESIGN DATA AND GENERAL NOTES, SEE SHEET SN.

FOR SUBMITTAL OF WORKING DRAWINGS, SEE SPECIAL PROVISIONS.

FOR FALSEWORK AND FORMWORK, SEE SPECIAL PROVISIONS.

FOR CRANE SAFETY, SEE SPECIAL PROVISIONS.

FOR GROUT FOR STRUCTURES, SEE SPECIAL PROVISIONS.

INASMUCH AS THE PAINT SYSTEM ON THE EXISTING STRUCTURAL STEEL CONTAINS LEAD, THE CONTRACTOR'S ATTENTION IS DIRECTED TO ARTICLE 107-1 OF THE STANDARD SPECIFICATIONS. ANY COSTS RESULTING FROM COMPLIANCE WITH APPLICABLE STATE OR FEDERAL REGULATIONS PERTAINING TO HANDLING OF MATERIALS CONTAINING LEAD BASED PAINT SHALL BE INCLUDED IN THE BID PRICE FOR "REMOVAL OF EXISTING STRUCTURE AT STATION 14+15.50 -L-".

THE EXISTING STRUCTURE CONSISTING OF 4 SPANS (1 @ 15'-9", 2 @ 15'-0", 1 @ 15'-6") WITH 24'-10" CLEAR ROADWAY WIDTH, TIMBER DECK ON TIMBER CAPS & PILES AND LOCATED AT THE PROPOSED STRUCTURE SHALL BE REMOVED. THE EXISTING BRIDGE IS PRESENTLY NOT POSTED FOR LOAD LIMIT. SHOULD THE STRUCTURAL INTEGRITY OF THE BRIDGE DETERIORATE DURING CONSTRUCTION OF THE PROPOSED BRIDGE, A LOAD LIMIT MAY BE POSTED AND MAY BE REDUCED AS FOUND NECESSARY DURING THE LIFE OF THE PROJECT.

## HYDRAULIC DATA

| | |
|---|---|
| DESIGN DISCHARGE | = 1,900 C.F.S. |
| FREQUENCY OF DESIGN FLOOD | = 25 YRS. |
| DESIGN HIGH WATER ELEVATION | = 481.2 |
| DRAINAGE AREA | = 8.3 SQ. MI. |
| BASE DISCHARGE(Q100) | = 2,860 C.F.S. |
| BASE HIGH WATER ELEVATION | = 482.96 |

## OVERTOPPING DATA

| | |
|---|---|
| OVERTOPPING DISCHARGE | = >3,700 C.F.S. |
| FREQUENCY OF OVERTOPPING FLOOD | = 500+ YRS. |
| OVERTOPPING FLOOD ELEVATION | = 488.1 |

THE SUBSTRUCTURE OF THE EXISTING BRIDGE INDICATED ON THE PLANS IS FROM THE BEST INFORMATION AVAILABLE. SINCE THIS INFORMATION IS SHOWN FOR THE CONVENIENCE OF THE CONTRACTOR, THE CONTRACTOR SHALL HAVE NO CLAIM WHATSOEVER AGAINST THE DEPARTMENT OF TRANSPORTATION FOR ANY DELAYS OR ADDITIONAL COST INCURRED BASED ON DIFFERENCES BETWEEN THE EXISTING BRIDGE SUBSTRUCTURE SHOWN ON THE PLANS AND THE ACTUAL CONDITIONS AT THE PROJECT SITE.

REMOVAL OF THE EXISTING BRIDGE SHALL BE PERFORMED IN A MANNER THAT PREVENTS DEBRIS FROM FALLING INTO THE WATER. THE CONTRACTOR SHALL SUBMIT DEMOLITION PLANS FOR REVIEW AND REMOVE THE BRIDGE IN ACCORDANCE WITH ARTICLE 402-2 OF THE STANDARD SPECIFICATIONS.

THIS STRUCTURE HAS BEEN DESIGNED IN ACCORDANCE WITH "HEC 18-EVALUATING SCOUR AT BRIDGES."

FOR EROSION CONTROL MEASURES, SEE EROSION CONTROL PLANS.

ASPHALT WEARING SURFACE IS INCLUDED IN ROADWAY QUANTITY ON ROADWAY PLANS.

FOR ASBESTOS ASSESSMENT FOR BRIDGE DEMOLITION AND RENOVATION ACTIVITIES, SEE SPECIAL PROVISIONS.

THE MATERIALSHOWN IN THE CROSS-HATCHED AREA SHALL BE EXCAVATED FOR A DISTANCE OF 30 FT. RIGHT. AND LEFT AT END BENT No. 1 AND 45 FT LEFT AND 25 FT RIGHT AT END BENT No. 2 AS DIRECTED BY THE ENGINEER. THIS WORK WILL BE PAID FOR AT THE CONTRACT LUMP SUM PRICE FOR UNCLASSIFIED STRUCTURE EXCAVATION. SEE SECTION 412 OF THE STANDARD SPECIFICATIONS.

AT THE CONTRACTOR'S OPTION, PRESTRESSED CONCRETE END BENT AND BENT CAPS MAY BE SUBSTITUTED IN PLACE OF THE CAST-IN-PLACE CAPS. THE CONTRACTOR SHALL COORDINATE WITH THE RESIDENT ENGINEER TO RECEIVE REVISED PLANS AND DETAILS FROM THE STRUCTURES MANAGEMENT UNIT. THE REDESIGN AND ANY ADDITIONAL MATERIALS NEEDED WILL BE AT NO ADDITIONAL COST TO THE CONTRACTOR.

THE CONTRACTOR'S ATTENTION IS CALLED TO THE FACT THAT THE CONCRETE SILLS AT BENT No. 1 AND BENT No. 3 ARE TO BE RETAINED.

THE CONTRACTOR SHALL PROVIDE INDEPENDENT ASSURANCE SAMPLES OF REINFORCING STEEL AS FOLLOWS: FOR PROJECTS REQUIRING UP TO 400 TONS OF REINFORCING STEEL, ONE 30 INCH SAMPLE OF EACH SIZE BAR USED, AND FOR PROJECTS REQUIRING OVER 400 TONS OF REINFORCING STEEL, TWO 30 INCH SAMPLES OF EACH SIZE BAR USED. THE BARS FROM WHICH THE SAMPLES ARE TAKEN MUST THEN BE SPLICED WITH REPLACEMENT BARS OF THE SIZE AND LENGTH OF THE SAMPLE, PLUS A MINIMUM LAP SPLICE OF THIRTY BAR DIAMETERS. PAYMENT FOR THE SAMPLES OF REINFORCING STEEL SHALL BE CONSIDERED INCIDENTAL TO VARIOUS PAY ITEMS.

## TOTAL BILL OF MATERIAL

| | REMOVAL OF EXISTING STRUCTURE | PILE EXCAVATION IN SOIL | PILE EXCAVATION NOT IN SOIL | UNCLASSIFIED STRUCTURE EXCAVATION | CLASS A CONCRETE | BRIDGE APPROACH SLABS | REINFORCING STEEL | HP 12 X 53 STEEL PILES | | VERTICAL CONCRETE BARRIER RAIL | RIP RAP CLASS II (2'-0" THICK) | GEOTEXTILE FOR DRAINAGE | ELASTOMERIC BEARINGS | 3'-0" X 2'-0" PRESTRESSED CONCRETE CORED SLAB | | ASBESTOS ASSESSMENT |
|---|---|---|---|---|---|---|---|---|---|---|---|---|---|---|---|---|
| | LUMP SUM | LIN. FT. | LIN. FT. | LUMP SUM | CU. YDS. | LUMP SUM | LBS. | NO. | LIN. FT. | LIN. FT. | TONS | SQ. YDS. | LUMP SUM | NO. | LIN. FT. | LUMP SUM |
| SUPERSTRUCTURE | | | | | | LUMP SUM | | | | 140.0 | | | LUMP SUM | 11 | 770 | |
| END BENT 1 | | 70 | 21 | LUMP SUM | 21.8 | | 2,645 | 7 | 119 | | 240 | 265 | | | | |
| END BENT 2 | | 87 | 21 | LUMP SUM | 21.8 | | 2,645 | 7 | 144 | | 255 | 280 | | | | |
| TOTAL | LUMP SUM | 157 | 42 | LUMP SUM | 43.6 | LUMP SUM | 5,290 | 14 | 263 | 140.0 | 495 | 545 | LUMP SUM | 11 | 770 | LUMP SUM |

PROJECT NO. B-5739

RANDOLPH COUNTY

STATION: 14+15.50 -L-

SHEET 3 OF 3

NORTH CAROLINA PROFESSIONAL SEAL 17230 ENGINEER WAEL S. ARAFAT

DocuSigned by: Wael Arafat 4139C12A32AB406...

2/27/2017

DOCUMENT NOT CONSIDERED FINAL UNLESS ALL SIGNATURES COMPLETED

STATE OF NORTH CAROLINA
DEPARTMENT OF TRANSPORTATION
RALEIGH

GENERAL DRAWING
FOR BRIDGE OVER
REED CREEK ON
SR 2621 (FOUSHEE RD.)
BETWEEN NC 22 & SR 2668

| REVISIONS | | | | | | SHEET NO. |
|---|---|---|---|---|---|---|
| NO. | BY: | DATE: | NO. | BY: | DATE: | S-3 |
| 1 | | | 3 | | | TOTAL SHEETS |
| 2 | | | 4 | | | 14 |

| | | | |
|---|---|---|---|
| DRAWN BY : | M.K. BEARD | DATE : | 8/24/16 |
| CHECKED BY : | J.D. HAWK | DATE : | 9/28/16 |
| DESIGN ENGINEER OF RECORD: | A. SORENGINH | DATE : | 1/2017 |

23-FEB-2017 09:51
R:\Structures\Plans\FINAL PLANS\B5739_SMU_GD.dgn
tbarbour

# LOAD AND RESISTANCE FACTOR RATING (LRFD) SUMMARY FOR PRESTRESSED CONCRETE GIRDERS

| LEVEL | | VEHICLE | WEIGHT (W) (TONS) | CONTROLLING LOAD RATING | MINIMUM RATING FACTORS (RF) | TONS = W X RF | STRENGTH I LIMIT STATE | | | | | | | | | | | SERVICE III LIMIT STATE | | | | | | COMMENT NUMBER |
|---|---|---|---|---|---|---|---|---|---|---|---|---|---|---|---|---|---|---|---|---|---|---|---|---|
| | | | | | | | | MOMENT | | | | | SHEAR | | | | | | MOMENT | | | | | |
| | | | | | | | LIVELOAD FACTORS | DISTRIBUTION FACTORS (DF) | RATING FACTOR | SPAN | GIRDER LOCATION | DISTANCE FROM LEFT END OF SPAN (ft) | DISTRIBUTION FACTORS (DF) | RATING FACTOR | SPAN | GIRDER LOCATION | DISTANCE FROM LEFT END OF SPAN (ft) | LIVELOAD FACTORS | DISTRIBUTION FACTORS (DF) | RATING FACTOR | SPAN | GIRDER LOCATION | DISTANCE FROM LEFT END OF SPAN (ft) | |
| DESIGN LOAD RATING | | HL-93(Inv) | N/A | (1) | **1.006** | -- | 1.75 | 0.273 | 1.03 | 70′ | EL | 34.5 | 0.507 | 1.32 | 70′ | EL | 6.9 | 0.80 | 0.273 | **1.01** | 70′ | EL | **34.5** | |
| | | HL-93(Opr) | N/A | -- | 1.341 | -- | 1.35 | 0.273 | 1.34 | 70′ | EL | 34.5 | 0.507 | 1.72 | 70′ | EL | 6.9 | N/A | -- | -- | -- | -- | -- | |
| | | HS-20(Inv) | 36.00 | (2) | **1.306** | 47.02 | 1.75 | 0.273 | 1.34 | 70′ | EL | 34.5 | 0.507 | 1.65 | 70′ | EL | 6.9 | 0.80 | 0.273 | **1.31** | 70′ | EL | **34.5** | |
| | | HS-20(Opr) | 36.00 | -- | 1.74 | 62.64 | 1.35 | 0.273 | 1.74 | 70′ | EL | 34.5 | 0.507 | 2.14 | 70′ | EL | 6.9 | N/A | -- | -- | -- | -- | -- | |
| LEGAL LOAD RATING | SV | SNSH | 13.500 | -- | 2.917 | 39.379 | 1.4 | 0.273 | 3.75 | 70′ | EL | 34.5 | 0.507 | 4.87 | 70′ | EL | 6.9 | 0.80 | 0.273 | 2.92 | 70′ | EL | 34.5 | |
| | | SNGARBS2 | 20.00 | -- | 2.187 | 43.741 | 1.4 | 0.273 | 2.81 | 70′ | EL | 34.5 | 0.507 | 3.47 | 70′ | EL | 6.9 | 0.80 | 0.273 | 2.19 | 70′ | EL | 34.5 | |
| | | SNAGRIS2 | 22.00 | -- | 2.077 | 45.69 | 1.4 | 0.273 | 2.67 | 70′ | EL | 34.5 | 0.507 | 3.23 | 70′ | EL | 6.9 | 0.80 | 0.273 | 2.08 | 70′ | EL | 34.5 | |
| | | SNCOTTS3 | 27.25 | -- | 1.452 | 39.565 | 1.4 | 0.273 | 1.87 | 70′ | EL | 34.5 | 0.507 | 2.43 | 70′ | EL | 6.9 | 0.80 | 0.273 | 1.45 | 70′ | EL | 34.5 | |
| | | SNAGGRS4 | 34.93 | -- | 1.218 | 42.554 | 1.4 | 0.273 | 1.57 | 70′ | EL | 34.5 | 0.507 | 2.03 | 70′ | EL | 6.9 | 0.80 | 0.273 | 1.22 | 70′ | EL | 34.5 | |
| | | SNS5A | 35.55 | -- | 1.191 | 42.346 | 1.4 | 0.273 | 1.53 | 70′ | EL | 34.5 | 0.507 | 2.06 | 70′ | EL | 6.9 | 0.80 | 0.273 | 1.19 | 70′ | EL | 34.5 | |
| | | SNS6A | 39.95 | -- | 1.095 | 43.747 | 1.4 | 0.273 | 1.41 | 70′ | EL | 34.5 | 0.507 | 1.88 | 70′ | EL | 6.9 | 0.80 | 0.273 | 1.10 | 70′ | EL | 34.5 | |
| | | SNS7B | 42.00 | -- | 1.043 | 43.801 | 1.4 | 0.273 | 1.34 | 70′ | EL | 34.5 | 0.507 | 1.85 | 70′ | EL | 6.9 | 0.80 | 0.273 | 1.04 | 70′ | EL | 34.5 | |
| | TTST | TNAGRIT3 | 33.00 | -- | 1.336 | 44.087 | 1.4 | 0.273 | 1.72 | 70′ | EL | 34.5 | 0.507 | 2.23 | 70′ | EL | 6.9 | 0.80 | 0.273 | 1.34 | 70′ | EL | 34.5 | |
| | | TNT4A | 33.08 | -- | 1.342 | 44.401 | 1.4 | 0.273 | 1.72 | 70′ | EL | 34.5 | 0.507 | 2.17 | 70′ | EL | 6.9 | 0.80 | 0.273 | 1.34 | 70′ | EL | 34.5 | |
| | | TNT6A | 41.60 | -- | 1.1 | 45.746 | 1.4 | 0.273 | 1.41 | 70′ | EL | 34.5 | 0.507 | 1.98 | 70′ | EL | 6.9 | 0.80 | 0.273 | 1.10 | 70′ | EL | 34.5 | |
| | | TNT7A | 42.00 | -- | 1.106 | 46.462 | 1.4 | 0.273 | 1.42 | 70′ | EL | 34.5 | 0.507 | 1.94 | 70′ | EL | 6.9 | 0.80 | 0.273 | 1.11 | 70′ | EL | 34.5 | |
| | | TNT7B | 42.00 | -- | 1.147 | 48.18 | 1.4 | 0.273 | 1.47 | 70′ | EL | 34.5 | 0.507 | 1.8 | 70′ | EL | 6.9 | 0.80 | 0.273 | 1.15 | 70′ | EL | 34.5 | |
| | | TNAGRIT4 | 43.00 | -- | 1.089 | 46.838 | 1.4 | 0.273 | 1.4 | 70′ | EL | 34.5 | 0.507 | 1.74 | 70′ | EL | 6.9 | 0.80 | 0.273 | 1.09 | 70′ | EL | 34.5 | |
| | | TNAGT5A | 45.00 | -- | 1.026 | 46.175 | 1.4 | 0.273 | 1.32 | 70′ | EL | 34.5 | 0.507 | 1.74 | 70′ | EL | 6.9 | 0.80 | 0.273 | 1.03 | 70′ | EL | 34.5 | |
| | | TNAGT5B | 45.00 | (3) | **1.013** | 45.579 | 1.4 | 0.273 | 1.3 | 70′ | EL | 34.5 | 0.507 | 1.66 | 70′ | EL | 6.9 | 0.80 | 0.273 | **1.01** | 70′ | EL | **34.5** | |

## LOAD FACTORS

| DESIGN LOAD RATING FACTORS | LIMIT STATE | $\gamma_{DC}$ | $\gamma_{DW}$ |
|---|---|---|---|
| | STRENGTH I | 1.25 | 1.50 |
| | SERVICE III | 1.00 | 1.00 |

## NOTES

MINIMUM RATING FACTORS ARE BASED ON THE STRENGTH I AND SERVICE III LIMIT STATES.

ALLOWABLE STRESSES FOR SERVICE III LIMIT STATE ARE AS REQUIRED FOR DESIGN.

(#) CONTROLLING LOAD RATING

(1) DESIGN LOAD RATING (HL-93)

(2) DESIGN LOAD RATING (HS-20)

(3) LEGAL LOAD RATING **

** SEE CHART FOR VEHICLE TYPE

GIRDER LOCATION

I - INTERIOR GIRDER
EL - EXTERIOR LEFT GIRDER
ER - EXTERIOR RIGHT GIRDER

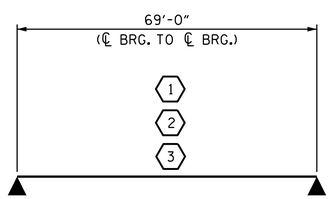


LRFR SUMMARY

FOR SPAN A

PROJECT NO. B-5739

RANDOLPH COUNTY

STATION: 14+15.50 -L-

STATE OF NORTH CAROLINA
DEPARTMENT OF TRANSPORTATION
RALEIGH

STANDARD
LRFR SUMMARY FOR
70′ CORED SLAB UNIT
90° SKEW
(NON-INTERSTATE TRAFFIC)

NORTH CAROLINA PROFESSIONAL SEAL 17230 ENGINEER WAEL S. ARAFAT

DocuSigned by: Wael Arafat
4139C12A32AB406...
2/27/2017

DOCUMENT NOT CONSIDERED FINAL UNLESS ALL SIGNATURES COMPLETED

| REVISIONS | | | | | | SHEET NO. |
|---|---|---|---|---|---|---|
| NO. | BY: | DATE: | NO. | BY: | DATE: | S-4 |
| 1 | | | 3 | | | TOTAL SHEETS |
| 2 | | | 4 | | | 14 |

ASSEMBLED BY : J.S. SMITH DATE : 8/22/16
CHECKED BY : J.K. BOWLES DATE : 8/30/16

DRAWN BY : CVC 6/10
CHECKED BY : DNS 6/10

DESIGN ENGINEER OF RECORD:
A. SORENGINH DATE : 1/17

17-FEB-2017 11:52
R:\Structures\Plans\FINAL PLANS\B-5739_SMU_LR.dgn
tbarbour

STD. NO. 24LRFR1_90S_70L

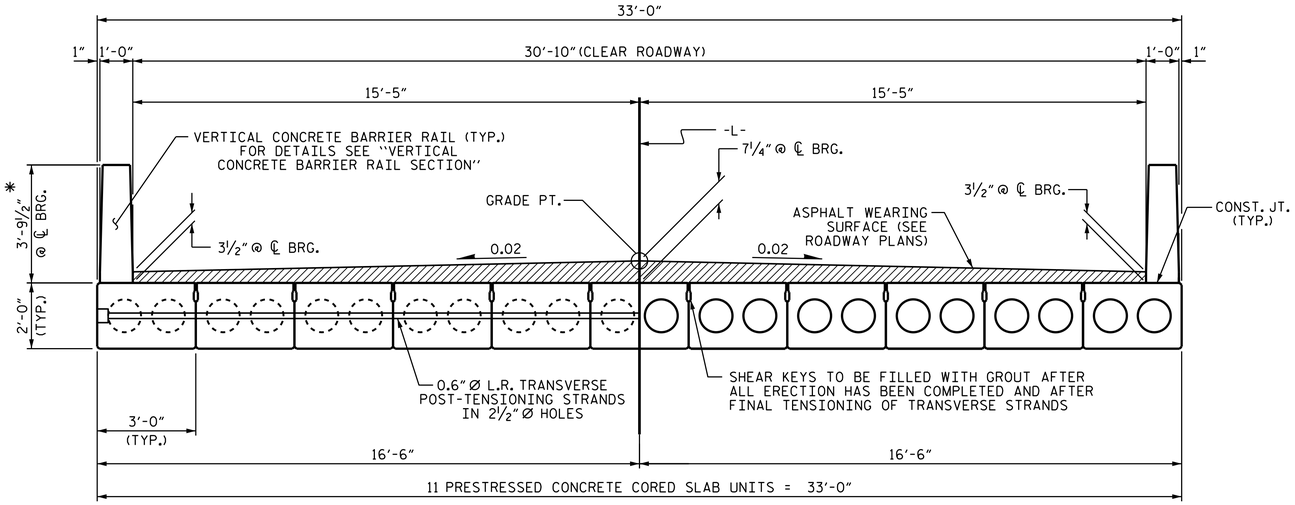


HALF SECTION
AT INTERMEDIATE DIAPHRAGMS

## TYPICAL SECTION

HALF SECTION
THROUGH VOIDS

* - THE MAXIMUM BARRIER RAIL HEIGHT AND ASPHALT THICKNESS IS SHOWN. THE HEIGHT OF THE BARRIER RAIL AND ASPHALT THICKNESS VARIES WHILE THE TOP OF THE BARRIER RAIL FOLLOWS THE PROFILE OF THE GUTTERLINE. FOR RAIL HEIGHT DETAILS AND ASPHALT THICKNESS, SEE THE "VERTICAL CONCRETE BARRIER RAIL SECTION" DETAIL.

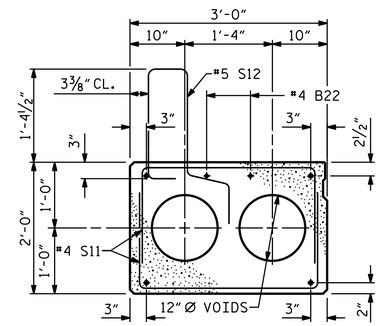


## EXTERIOR SLAB SECTION

(FOR PRESTRESSED STRAND LAYOUT, SEE INTERIOR SLAB SECTION.)

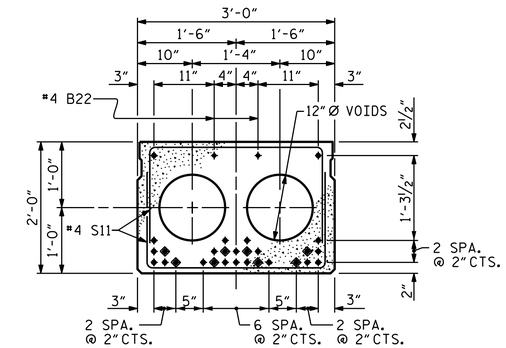


## INTERIOR SLAB SECTION

(28 STRANDS REQUIRED)

## 0.6" Ø LOW RELAXATION STRAND LAYOUT

## DEBONDING LEGEND

◈ BOND SHALL BE BROKEN ON THESE STRANDS FOR A DISTANCE OF 12'-0" FROM END OF CORED SLAB UNIT. SEE STANDARD SPECIFICATIONS, ARTICLE 1078-7.

FIXED END

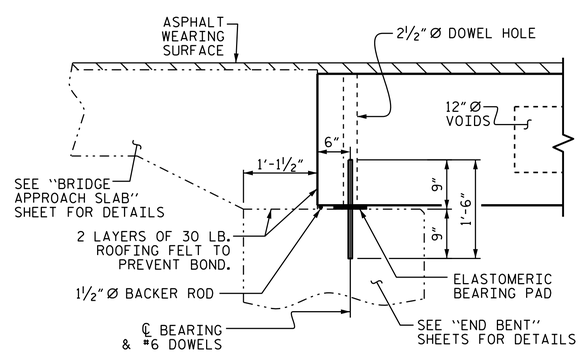


## SECTION AT END BENT

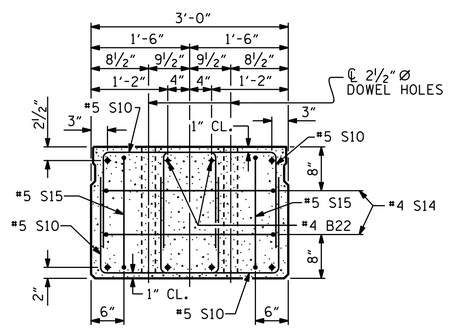


## END ELEVATION

SHOWING PLACEMENT OF DOUBLE STIRRUPS AND LOCATION OF DOWEL HOLES. (STRAND LAYOUT NOT SHOWN.) INTERIOR SLAB UNIT SHOWN-EXTERIOR SLAB UNIT SIMILAR EXCEPT SHEAR KEY LOCATION.

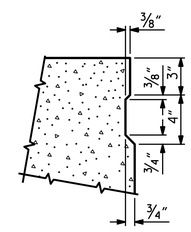


## SHEAR KEY DETAIL

NOTE: OMIT SHEAR KEY ON OUTSIDE FACE OF EXTERIOR CORED SLABS.

PERMITTED THREADED INSERT CAST IN OUTSIDE FACE OF EXTERIOR UNIT AND RECESSED ⅜". SIZE TO BE DETERMINED BY CONTRACTOR.

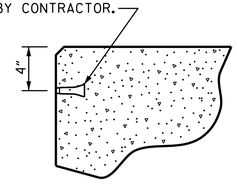


THREADED INSERT DETAIL

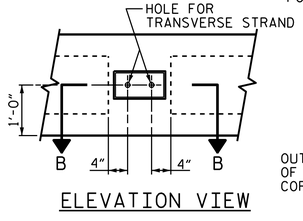


ELEVATION VIEW

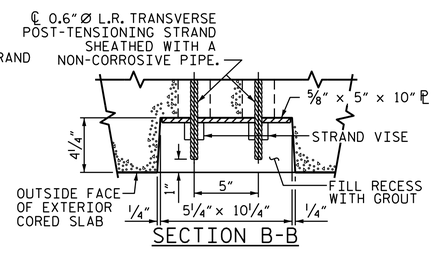


SECTION B-B

## GROUTED RECESS AT END OF POST-TENSIONED STRAND CORED SLABS

PROJECT NO. B-5739
RANDOLPH COUNTY
STATION: 14+15.50 -L-

SHEET 1 OF 3

STATE OF NORTH CAROLINA
DEPARTMENT OF TRANSPORTATION
RALEIGH

STANDARD
3'-0" X 2'-0"
PRESTRESSED CONCRETE
CORED SLAB UNIT

NORTH CAROLINA PROFESSIONAL SEAL 17230 ENGINEER WAEL S. ARAFAT
DocuSigned by: Wael Arafat 4139C12A32AB406...
2/27/2017

DOCUMENT NOT CONSIDERED FINAL UNLESS ALL SIGNATURES COMPLETED

| REVISIONS | | | | | | | | SHEET NO. |
|---|---|---|---|---|---|---|---|---|
| NO. | BY: | DATE: | NO. | BY: | DATE: | | | S-5 |
| 1 | | | 3 | | | | | TOTAL SHEETS |
| 2 | | | 4 | | | | | 14 |

| | | | |
|---|---|---|---|
| ASSEMBLED BY : J.S. SMITH | | DATE : 8/22/16 | |
| CHECKED BY : J.K. BOWLES | | DATE : 8/29/16 | |
| DRAWN BY : MAA 6/10 | REV. 9/14 | MAA/TMG | |
| CHECKED BY : MKT 7/10 | | | |

23-FEB-2017 09:51
R:\Structures\Plans\FINAL PLANS\B-5739_SMU_CS.dgn
tbarbour

STD. NO. 24PCS4_33_90S

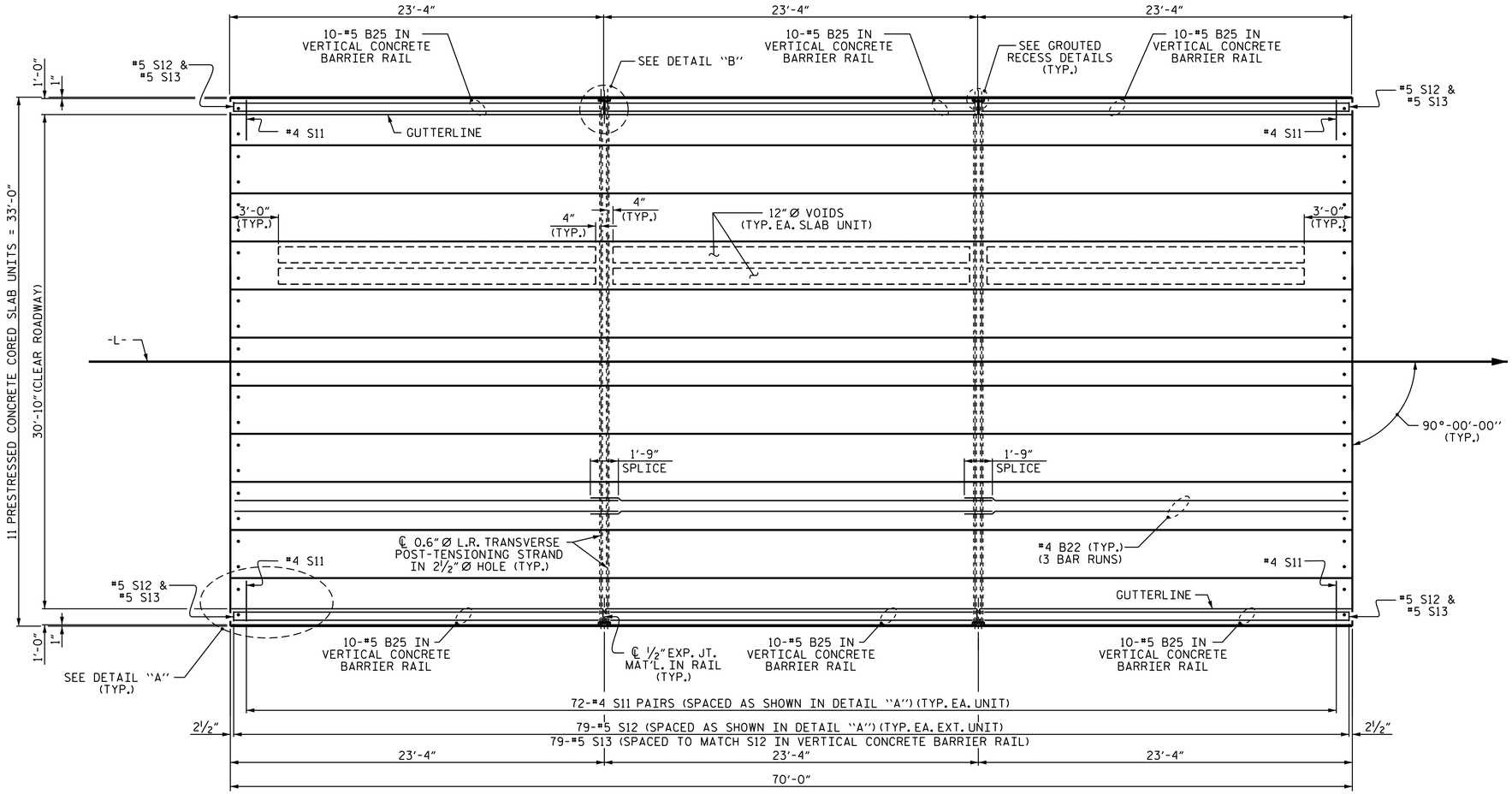


## PLAN OF UNIT

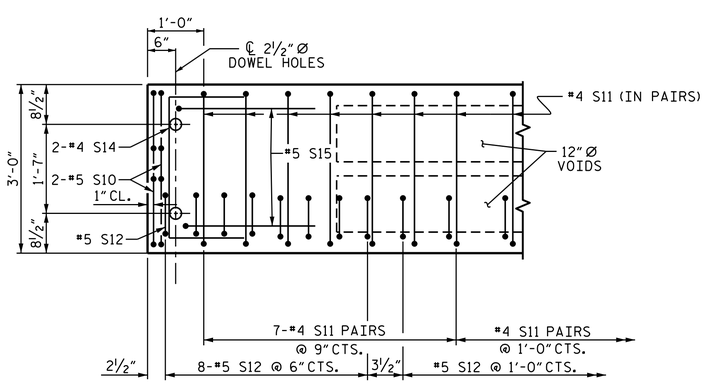


## DETAIL "A"

(TYPICAL EACH END OF UNIT)
NOTE: EXTERIOR UNIT SHOWN - INTERIOR UNIT SIMILAR EXCEPT OMIT #5 S12 BARS.

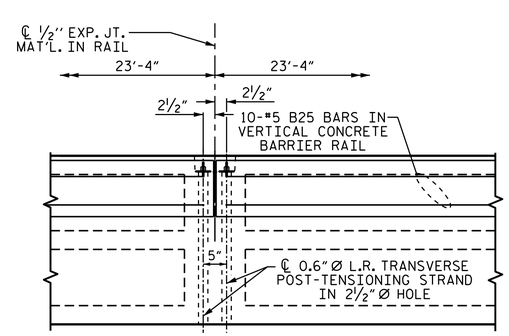


## DETAIL "B"

#4 S11 BARS MAY BE SHIFTED AS NECESSARY TO MAINTAIN 1" CLEAR TO GROUTED RECESS AND 2½" Ø TRANSVERSE POST-TENSIONING STRAND HOLES

PROJECT NO. B-5739
RANDOLPH COUNTY
STATION: 14+15.50 -L-

SHEET 2 OF 3

STATE OF NORTH CAROLINA
DEPARTMENT OF TRANSPORTATION
RALEIGH

# PLAN OF 70' UNIT 30'-10" CLEAR ROADWAY 90° SKEW

NORTH CAROLINA PROFESSIONAL SEAL 17230 ENGINEER WAEL S. ARAFAT

DocuSigned by: Wael Arafat
4139C12A32AB406...
2/27/2017

DOCUMENT NOT CONSIDERED FINAL UNLESS ALL SIGNATURES COMPLETED

| REVISIONS | | | | | | | |
|---|---|---|---|---|---|---|---|
| NO. | BY: | DATE: | NO. | BY: | DATE: | | |
| 1 | | | 3 | | | | |
| 2 | | | 4 | | | | |

SHEET NO. S-6
TOTAL SHEETS 14

| | | | |
|---|---|---|---|
| ASSEMBLED BY : J.S. SMITH | | DATE : 8/22/16 | |
| CHECKED BY : J.K. BOWLES | | DATE : 8/29/16 | |
| DRAWN BY : MAA 6/10 | REV. 12/5/11 | MAA/AAC | |
| CHECKED BY : MKT 7/10 | REV. 8/14 | MAA/TMG | |

17-FEB-2017 11:52
R:\Structures\Plans\FINAL PLANS\B-5739_SMU_CS.dgn
tbarbour

STD. NO. 24PCS_33_90S_70L

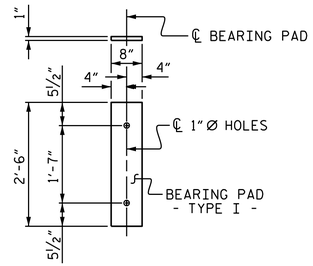


FIXED END
( TYPE I - 22 REQ'D )

## ELASTOMERIC BEARING DETAILS

ELASTOMER IN ALL BEARINGS SHALL BE 60 DUROMETER HARDNESS.

## BILL OF MATERIAL FOR VERTICAL CONCRETE BARRIER RAIL

| BAR | BARS PER PAIR OF EXTERIOR UNITS | TOTAL NO. | SIZE | TYPE | LENGTH | WEIGHT |
|---|---|---|---|---|---|---|
| | 70' UNIT | | | | | |
| | | | | | | |
| *B25 | 60 | 60 | #5 | STR | 22'-11" | 1434 |
| | | | | | | |
| *S13 | 158 | 158 | #5 | 2 | 7'-2" | 1181 |
| | | | | | | |
| * EPOXY COATED REINFORCING STEEL | | | | LBS. | | 2615 |
| CLASS AA CONCRETE | | | | CU.YDS. | | 18.1 |
| TOTAL VERTICAL CONCRETE BARRIER RAIL | | | | LN. FT. | | 140.0 |

## BILL OF MATERIAL FOR ONE 70' CORED SLAB UNIT

| | | | | EXTERIOR UNIT | | INTERIOR UNIT | |
|---|---|---|---|---|---|---|---|
| BAR | NUMBER | SIZE | TYPE | LENGTH | WEIGHT | LENGTH | WEIGHT |
| B22 | 6 | #4 | STR | 24'-6" | 98 | 24'-6" | 98 |
| | | | | | | | |
| S10 | 8 | #5 | 3 | 4'-9" | 40 | 4'-9" | 40 |
| S11 | 144 | #4 | 3 | 5'-10" | 561 | 5'-10" | 561 |
| *S12 | 79 | #5 | 1 | 5'-7" | 460 | | |
| S14 | 4 | #4 | 3 | 5'-7" | 15 | 5'-7" | 15 |
| S15 | 4 | #5 | 3 | 7'-1" | 30 | 7'-1" | 30 |
| | | | | | | | |
| REINFORCING STEEL | | | LBS. | | 744 | | 744 |
| * EPOXY COATED REINFORCING STEEL | | | LBS. | | 460 | | |
| 7,000 P.S.I. CONCRETE | | | CU. YDS. | | 11.8 | | 11.8 |
| | | | | | | | |
| 0.6"Ø L.R. STRANDS | | | No. | | 28 | | 28 |

## BAR TYPES

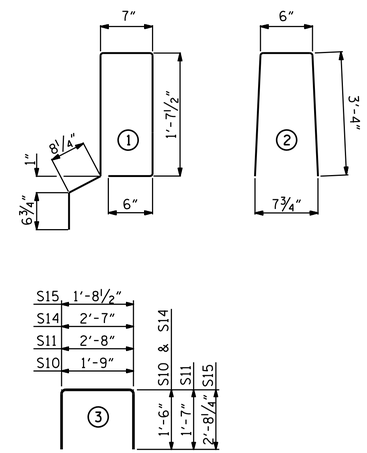


ALL BAR DIMENSIONS ARE OUT TO OUT.

## CORED SLABS REQUIRED

| | NUMBER | LENGTH | TOTAL LENGTH |
|---|---|---|---|
| 70' UNIT | | | |
| EXTERIOR C.S. | 2 | 70'-0" | 140'-0" |
| INTERIOR C.S. | 9 | 70'-0" | 630'-0" |
| TOTAL | 11 | 70'-0" | 770'-0" |

## GUTTERLINE ASPHALT THICKNESS & RAIL HEIGHT

| | ASPHALT OVERLAY THICKNESS @ MID-SPAN | RAIL HEIGHT @ MID-SPAN |
|---|---|---|
| 70' UNITS | 2" | 3'-8" |

## DEAD LOAD DEFLECTION AND CAMBER

| | 3'-0" x 2'-0" |
|---|---|
| 70' CORED SLAB UNIT | 0.6"Ø L.R. STRAND |
| CAMBER (SLAB ALONE IN PLACE) | 2¼" ↑ |
| DEFLECTION DUE TO SUPERIMPOSED DEAD LOAD** | ¾" ↑ |
| FINAL CAMBER | 1½" ↑ |

** INCLUDES FUTURE WEARING SURFACE

## NOTES

ALL PRESTRESSING STRANDS SHALL BE 7-WIRE LOW RELAXATION GRADE 270 STRANDS AND SHALL CONFORM TO AASHTO M203 EXCEPT FOR SAMPLING REQUIREMENTS WHICH SHALL BE IN ACCORDANCE WITH THE STANDARD SPECIFICATIONS.

ALL REINFORCING STEEL CAST WITH THE CORED SLAB SECTIONS SHALL BE GRADE 60 AND SHALL BE INCLUDED IN THE UNIT PRICE BID FOR PRESTRESSED CONCRETE CORED SLABS.

RECESSES FOR TRANSVERSE STRANDS SHALL BE GROUTED AFTER THE TENSIONING OF THE STRANDS.

THE 2½"Ø DOWEL HOLES AT FIXED ENDS OF SLAB SECTIONS SHALL BE FILLED WITH NON-SHRINK GROUT.

THE BACKER RODS SHALL CONFORM TO THE REQUIREMENTS OF TYPE M BOND BREAKER. SEE SECTION 1028 OF THE STANDARD SPECIFICATIONS.

WHEN CORED SLABS ARE CAST, AN INTERNAL HOLD-DOWN SYSTEM SHALL BE EMPLOYED TO PREVENT VOIDS FROM RISING OR MOVING SIDEWAYS. AT LEAST SIX WEEKS PRIOR TO CASTING CORED SLABS, THE CONTRACTOR SHALL SUBMIT TO THE ENGINEER FOR REVIEW AND COMMENT, DETAILED DRAWINGS OF THE PROPOSED HOLD-DOWN SYSTEM. IN ADDITION TO STRUCTURAL DETAILS, LOCATION AND SPACING OF THE HOLD-DOWNS SHALL BE INDICATED.

THE TRANSFER OF LOAD FROM THE ANCHORAGES TO THE CORED SLAB UNIT SHALL BE DONE WHEN THE CONCRETE HAS REACHED A COMPRESSIVE STRENGTH OF NOT LESS THAN THE REQUIRED STRENGTH SHOWN IN THE "CONCRETE RELEASE STRENGTH" TABLE.

ALL REINFORCING STEEL IN VERTICAL CONCRETE BARRIER RAILS SHALL BE EPOXY COATED.

PRESTRESSING STRANDS SHALL BE CUT FLUSH WITH THE CORED SLAB UNIT ENDS.

APPLY EPOXY PROTECTIVE COATING TO CORED SLAB UNIT ENDS.

GROOVED CONTRACTION JOINTS, ½" IN DEPTH, SHALL BE TOOLED IN ALL EXPOSED FACES OF THE BARRIER RAIL AND IN ACCORDANCE WITH ARTICLE 825-10(B) OF THE STANDARD SPECIFICATIONS. A CONTRACTION JOINT SHALL BE LOCATED AT EACH THIRD POINT BETWEEN BARRIER RAIL EXPANSION JOINTS. ONLY ONE CONTRACTION JOINT IS REQUIRED AT MIDPOINT OF BARRIER RAIL SEGMENTS LESS THAN 20 FEET IN LENGTH AND NO CONTRACTION JOINTS ARE REQUIRED FOR THOSE SEGMENTS LESS THAN 10 FEET IN LENGTH.

FLAME CUTTING OF THE TRANSVERSE POST-TENSIONING STRAND IS NOT ALLOWED.

MAINTAIN A SYMMETRIC TENSION FORCE BETWEEN EACH PAIR OF TRANSVERSE POST TENSIONING STRANDS IN THE DIAPHRAGM.

THE #4 S11 STIRRUPS MAY BE SHIFTED AS NECESSARY TO MAINTAIN 1" CLEAR TO THE GROUTED RECESS.

FOR GROUT FOR STRUCTURES, SEE SPECIAL PROVISIONS.

THE PERMITTED THREADED INSERTS ARE DETAILED AS AN OPTION FOR THE CONTRACTOR TO ATTACH FALSEWORK AND FORMWORK DURING CONSTRUCTION.

THE PERMITTED THREADED INSERTS IN THE EXTERIOR UNITS SHALL BE SIZED BY THE CONTRACTOR, SPACED AT 4'-0" CENTERS AND GALVANIZED IN ACCORDANCE WITH SECTION 1076 OF THE STANDARD SPECIFICATIONS. STAINLESS STEEL THREADED INSERTS MAY BE USED AS AN ALTERNATE.

THE PERMITTED THREADED INSERTS SHALL BE GROUTED BY THE CONTRACTOR IMMEDIATELY FOLLOWING REMOVAL OF THE FALSEWORK.

THE COST OF THE PERMITTED THREADED INSERTS SHALL BE INCLUDED IN THE PRICE BID FOR THE PRECAST UNITS.

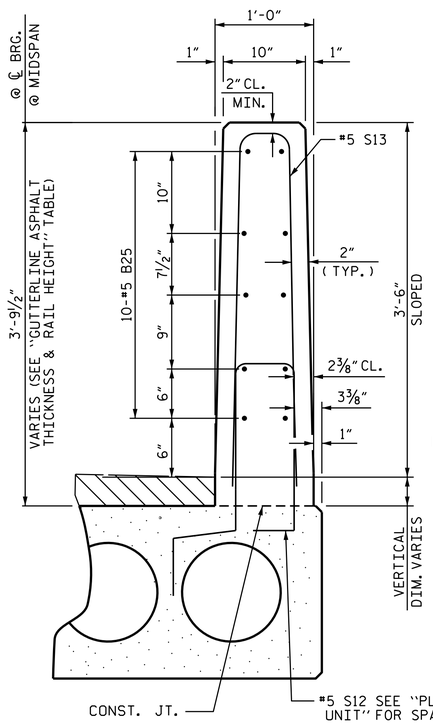


SECTION THRU RAIL

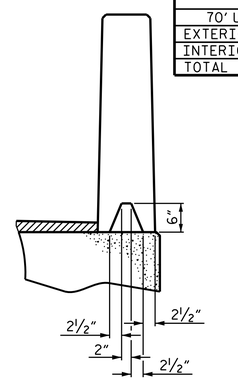


SECTION S-S
AT DAM IN OPEN JOINT
(THIS IS TO BE USED ONLY WHEN SLIP FORM IS USED)

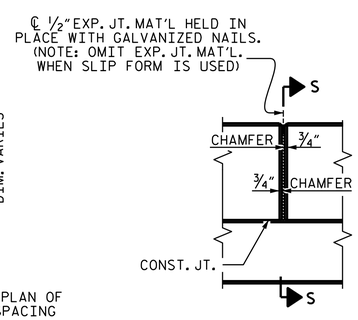


ELEVATION AT EXPANSION JOINTS

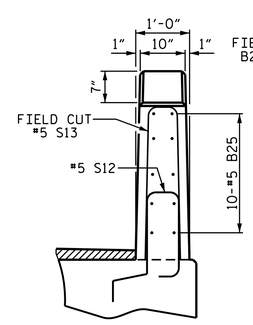


END VIEW

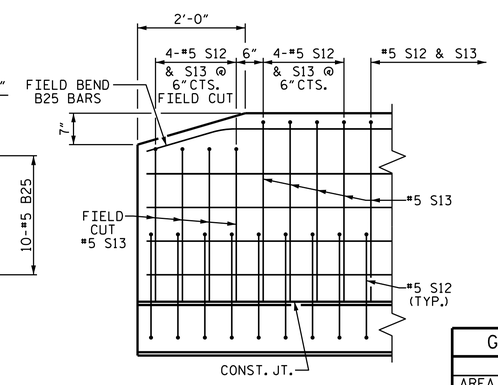


SIDE VIEW

## CONCRETE RELEASE STRENGTH

| UNIT | PSI |
|---|---|
| 70' UNITS | 5,500 |

## GRADE 270 STRANDS

| | 0.6"Ø L.R. |
|---|---|
| AREA (SQUARE INCHES) | 0.217 |
| ULTIMATE STRENGTH (LBS. PER STRAND) | 58,600 |
| APPLIED PRESTRESS (LBS. PER STRAND) | 43,950 |

NORTH CAROLINA PROFESSIONAL SEAL 17230 ENGINEER WAEL S. ARAFAT

DocuSigned by: Wael Arafat
4139C12A32AB406...
2/27/2017

DOCUMENT NOT CONSIDERED FINAL UNLESS ALL SIGNATURES COMPLETED

PROJECT NO. B-5739
RANDOLPH COUNTY
STATION: 14+15.50 -L-

SHEET 3 OF 3

STATE OF NORTH CAROLINA
DEPARTMENT OF TRANSPORTATION
RALEIGH

STANDARD
3'-0" X 2'-0"
PRESTRESSED CONCRETE
CORED SLAB UNIT

| REVISIONS | | | | | | | SHEET NO. |
|---|---|---|---|---|---|---|---|
| NO. | BY: | DATE: | NO. | BY: | DATE: | | S-7 |
| 1 | | | 3 | | | | TOTAL SHEETS |
| 2 | | | 4 | | | | 14 |

STD. NO. 24PCS3_33_90S

## VERTICAL CONCRETE BARRIER RAIL DETAILS

## END OF RAIL DETAILS

| | | | |
|---|---|---|---|
| ASSEMBLED BY : J.S. SMITH | | DATE : 8/22/16 | |
| CHECKED BY : J.K. BOWLES | | DATE : 8/29/16 | |
| DRAWN BY : MAA | 6/10 | REV. 11/14 | MAA/TMG |
| CHECKED BY : MKT | 7/10 | | |

23-FEB-2017 10:57
R:\Structures\Plans\FINAL PLANS\B-5739_SMU_CS.dgn
tbarbour

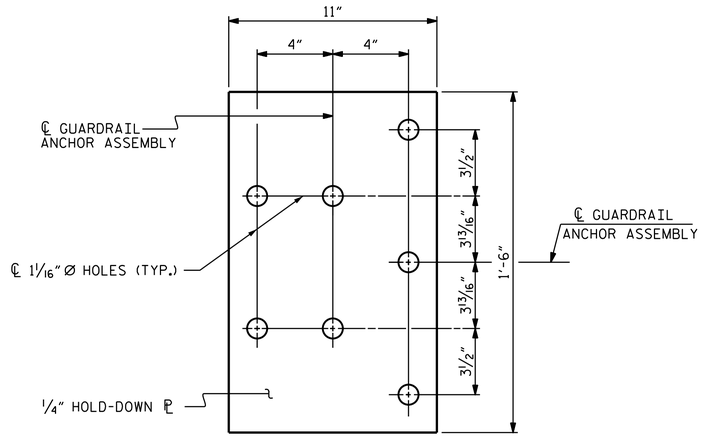


PLAN

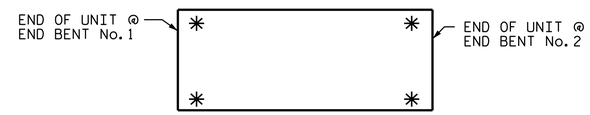


SKETCH SHOWING POINTS OF ATTACHMENT

✳ DENOTES GUARDRAIL ANCHOR ASSEMBLY

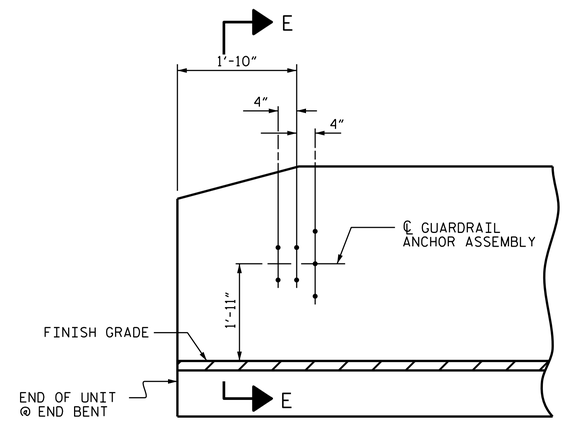


ELEVATION

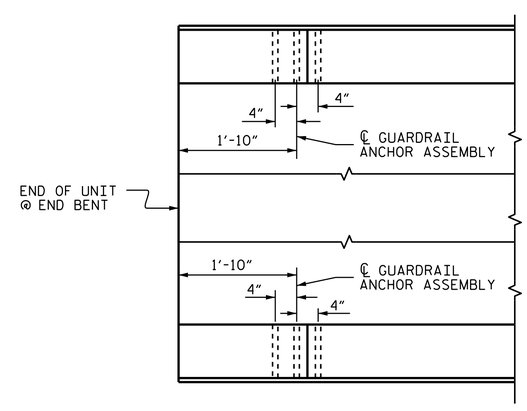


PLAN

LOCATION OF ANCHORS FOR GUARDRAIL

END BENT 1 SHOWN, END BENT 2 SIMILAR.

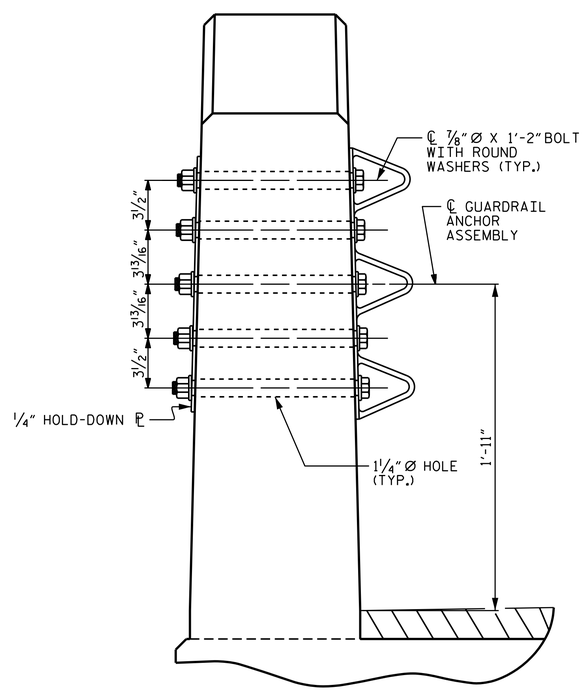


SECTION E-E

GUARDRAIL ANCHOR ASSEMBLY DETAILS

## NOTES

THE GUARDRAIL ANCHOR ASSEMBLY SHALL CONSIST OF A 1/4" HOLD DOWN PLATE AND 7 - 7/8" Ø BOLTS WITH NUTS AND WASHERS.

THE HOLD-DOWN PLATE SHALL CONFORM TO AASHTO M270 GRADE 36. AFTER FABRICATION, THE HOLD-DOWN PLATE SHALL BE HOT-DIP GALVANIZED IN ACCORDANCE WITH AASHTO M111.

BOLTS SHALL CONFORM TO THE REQUIREMENTS OF ASTM A307 AND NUTS SHALL CONFORM TO THE REQUIREMENTS OF AASHTO M291. BOLTS, NUTS AND WASHERS SHALL BE GALVANIZED. (AT THE CONTRACTOR'S OPTION, STAINLESS STEEL BOLTS, NUTS AND WASHERS MAY BE USED AS AN ALTERNATE FOR THE 7/8" Ø GALVANIZED BOLTS, NUTS AND WASHERS. THEY SHALL CONFORM TO OR EXCEED THE MECHANICAL REQUIREMENTS OF ASTM A307. THE USE OF THIS ALTERNATE SHALL BE APPROVED BY THE ENGINEER.)

THE GUARDRAIL ANCHOR ASSEMBLY IS REQUIRED AT ALL POINTS WHERE APPROACH GUARDRAIL IS TO BE ATTACHED TO THE END OF BARRIER RAIL. FOR POINTS OF ATTACHMENT, SEE SKETCH.

AFTER INSTALLATION, THE EXPOSED THREAD OF THE BOLT SHALL BE BURRED WITH A SHARP POINTED TOOL.

THE COST OF THE GUARDRAIL ANCHOR ASSEMBLY SHALL BE INCLUDED IN THE UNIT CONTRACT PRICE BID FOR VERTICAL CONCRETE BARRIER RAIL.

THE VERTICAL REINFORCING BARS MAY BE SHIFTED SLIGHTLY IN THE VERTICAL CONCRETE BARRIER RAIL TO CLEAR ASSEMBLY BOLTS.

THE 1 1/4" Ø HOLES SHALL BE FORMED OR DRILLED WITH A CORE BIT. IMPACT TOOLS WILL NOT BE PERMITTED. ANY CONCRETE DAMAGED BY THIS WORK SHALL BE REPAIRED TO THE SATISFACTION OF THE ENGINEER.

PROJECT NO. B-5739
RANDOLPH COUNTY
STATION: 14+15.50 -L

NORTH CAROLINA PROFESSIONAL SEAL 17230 ENGINEER WAEL S. ARAFAT

DocuSigned by: Wael Arafat
4139C12A32AB406...
2/27/2017

STATE OF NORTH CAROLINA
DEPARTMENT OF TRANSPORTATION
RALEIGH

STANDARD
GUARDRAIL ANCHORAGE DETAILS FOR VERTICAL CONCRETE BARRIER RAIL

| | |
|---|---|
| ASSEMBLED BY : J.S. SMITH | DATE : 8/22/16 |
| CHECKED BY : J.K. BOWLES | DATE : 8/29/16 |
| DRAWN BY : MAA 5/10 | REV. 12/5/11 MAA/GM |
| CHECKED BY : GM 5/10 | REV. 6/13 MAA/GM |
| | REV. 1/15 MAA/TMG |

DOCUMENT NOT CONSIDERED FINAL UNLESS ALL SIGNATURES COMPLETED

| REVISIONS | | | | | | |
|---|---|---|---|---|---|---|
| NO. | BY: | DATE: | NO. | BY: | DATE: | |
| 1 | | | 3 | | | |
| 2 | | | 4 | | | |

SHEET NO. S-8
TOTAL SHEETS 14

STD. NO. GRA3

17-FEB-2017 11:52
R:\Structures\Plans\FINAL PLANS\B-5739_SMU_GR.dgn
tbarbour

## NOTES

STIRRUPS IN CAP MAY BE SHIFTED AS NECESSARY TO CLEAR DOWELS.

THE CONCRETE IN THE SHADED AREA OF THE WING SHALL BE POURED AFTER THE VERTICAL CONCRETE BARRIER RAIL IS CAST IF SLIP FORMING IS USED.

FOR PILE SPLICE DETAILS, SEE SHEET 4 OF 4.

FOR WING DETAILS, SEE SHEET 3 OF 4.

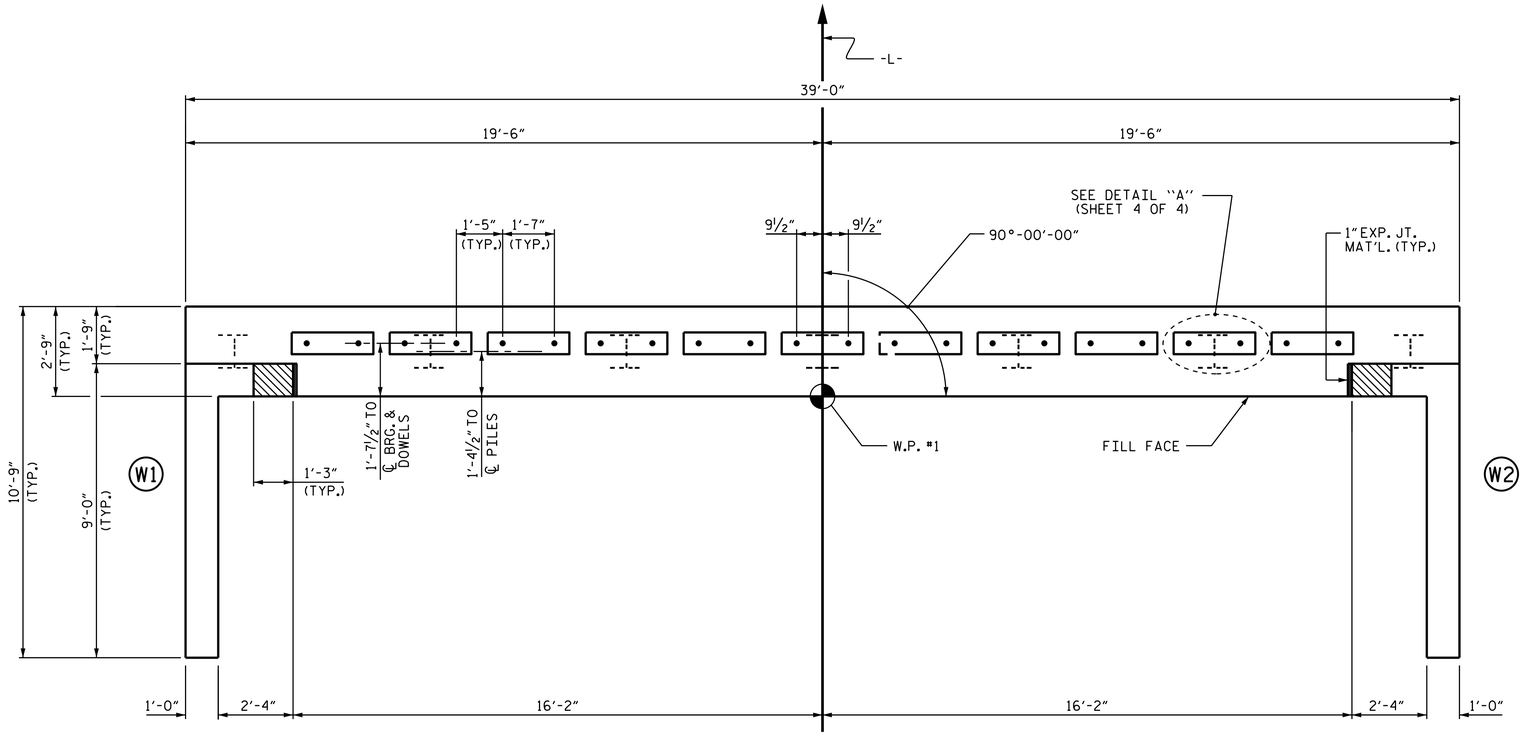


## PLAN

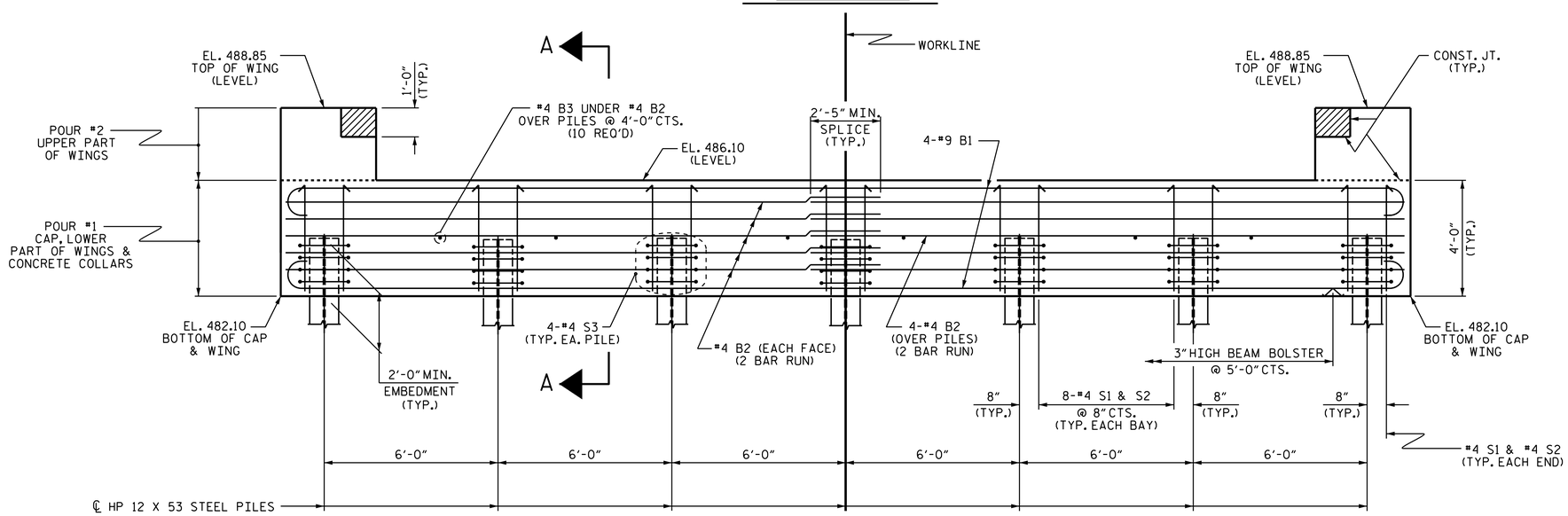


## ELEVATION

WINGS NOT SHOWN FOR CLARITY.
FOR SECTION A-A, SEE SHEET 4 OF 4.
CONCRETE COLLARS FOR STEEL PILES NOT SHOWN IN PLAN AND ELEVATION VIEWS FOR CLARITY.
SEE "CORROSION PROTECTION FOR STEEL PILES DETAIL", SHEET 4 OF 4.

PROJECT NO. B-5739
RANDOLPH COUNTY
STATION: 14+15.50 -L-

SHEET 1 OF 4

STATE OF NORTH CAROLINA
DEPARTMENT OF TRANSPORTATION
RALEIGH

SUBSTRUCTURE

END BENT No. 1

NORTH CAROLINA PROFESSIONAL SEAL 17230 ENGINEER WAEL S. ARAFAT

DocuSigned by: Wael Arafat
4139C12A32AB406...
2/27/2017

DOCUMENT NOT CONSIDERED FINAL UNLESS ALL SIGNATURES COMPLETED

| REVISIONS | | | | | | | | SHEET NO. |
|---|---|---|---|---|---|---|---|---|
| NO. | BY: | DATE: | NO. | BY: | DATE: | | | S-9 |
| 1 | | | 3 | | | | | TOTAL SHEETS |
| 2 | | | 4 | | | | | 14 |

| | | |
|---|---|---|
| ASSEMBLED BY : J.S. SMITH | DATE : 8/22/16 | |
| CHECKED BY : J.K. BOWLES | DATE : 8/29/16 | |
| DRAWN BY : WJH 12/11 | REV. 4/15 | MAA/TMG |
| CHECKED BY : AAC 12/11 | | |

17-FEB-2017 11:52
R:\Structures\Plans\FINAL PLANS\B-5739_SMU_E*.dgn
tbarbour

STD. NO. EB_33_90S4

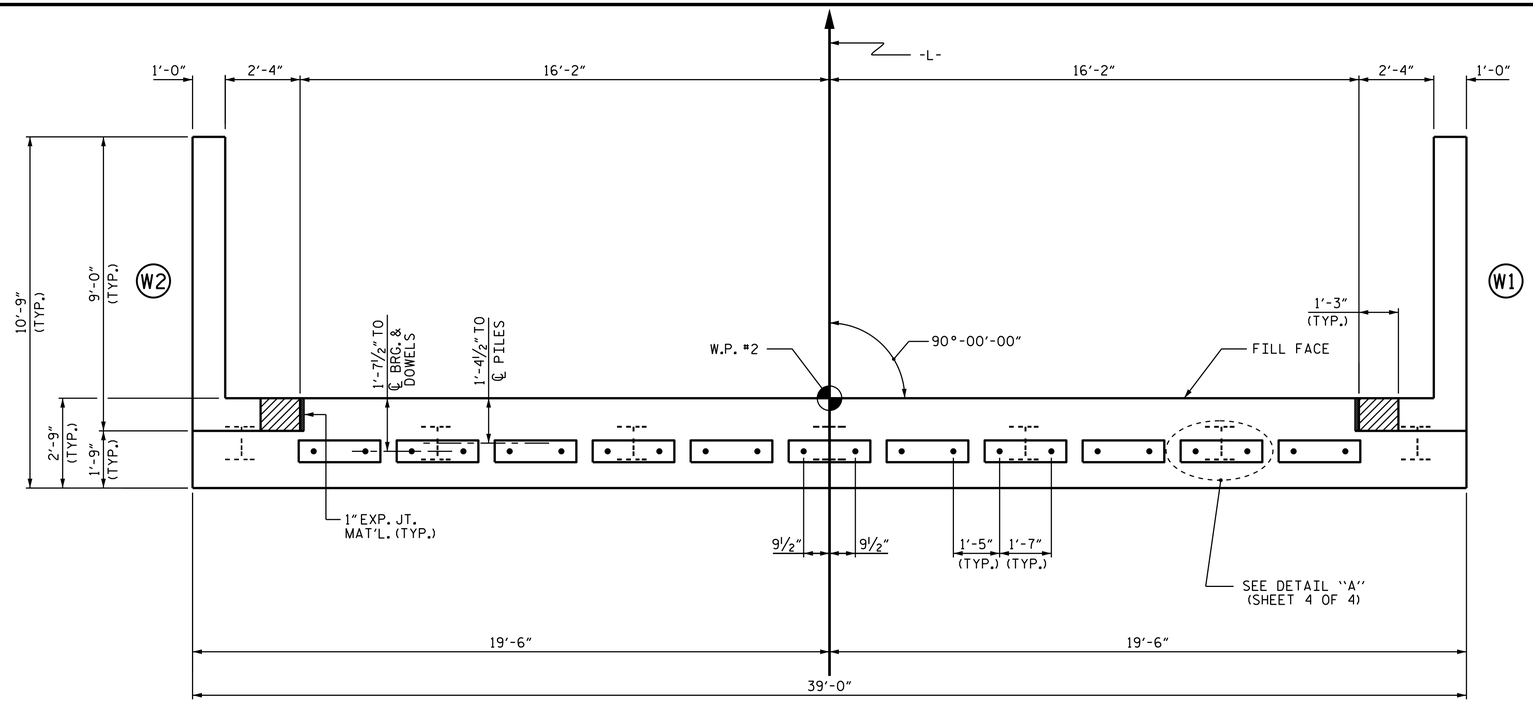


## PLAN

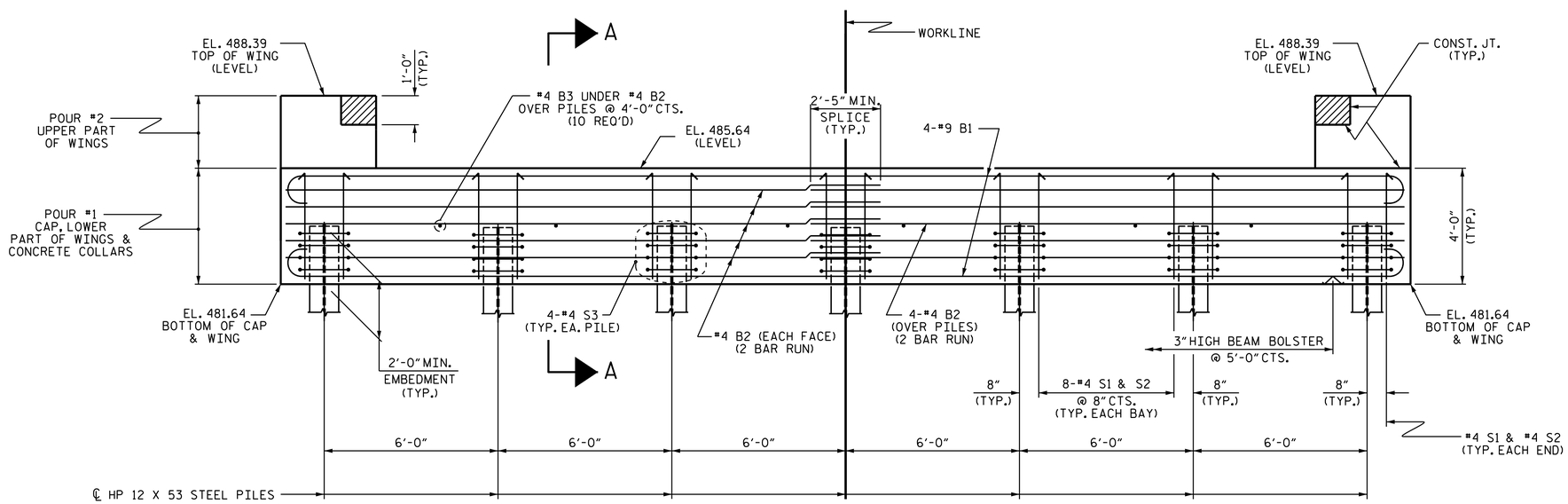


## ELEVATION

WINGS NOT SHOWN FOR CLARITY.
FOR SECTION A-A, SEE SHEET 4 OF 4.
CONCRETE COLLARS FOR STEEL PILES NOT SHOWN IN PLAN AND ELEVATION VIEWS FOR CLARITY.
SEE "CORROSION PROTECTION FOR STEEL PILES DETAIL", SHEET 4 OF 4.

## NOTES

STIRRUPS IN CAP MAY BE SHIFTED AS NECESSARY TO CLEAR DOWELS.

THE CONCRETE IN THE SHADED AREA OF THE WING SHALL BE POURED AFTER THE VERTICAL CONCRETE BARRIER RAIL IS CAST IF SLIP FORMING IS USED.

FOR PILE SPLICE DETAILS, SEE SHEET 4 OF 4.

FOR WING DETAILS, SEE SHEET 3 OF 4.

PROJECT NO. B-5739
RANDOLPH COUNTY
STATION: 14+15.50 -L-

SHEET 2 OF 4

STATE OF NORTH CAROLINA
DEPARTMENT OF TRANSPORTATION
RALEIGH

SUBSTRUCTURE

END BENT No. 2

NORTH CAROLINA PROFESSIONAL SEAL 17230 ENGINEER WAEL S. ARAFAT

DocuSigned by: Wael Arafat
4139C12A32AB406...
2/27/2017

DOCUMENT NOT CONSIDERED FINAL UNLESS ALL SIGNATURES COMPLETED

| REVISIONS | | | | | | | | SHEET NO. |
|---|---|---|---|---|---|---|---|---|
| NO. | BY: | DATE: | NO. | BY: | DATE: | | | S-10 |
| 1 | | | 3 | | | | | TOTAL SHEETS |
| 2 | | | 4 | | | | | 14 |

| | | | |
|---|---|---|---|
| ASSEMBLED BY : | J.S. SMITH | DATE : 8/22/16 | |
| CHECKED BY : | J.K. BOWLES | DATE : 8/29/16 | |
| DRAWN BY : | WJH | 12/11 | REV. 4/15 MAA/TMG |
| CHECKED BY : | AAC | 12/11 | |

17-FEB-2017 11:52
R:\Structures\Plans\FINAL PLANS\B-5739_SMU_E*.dgn
tbarbour

STD. NO. EB_33_90S4

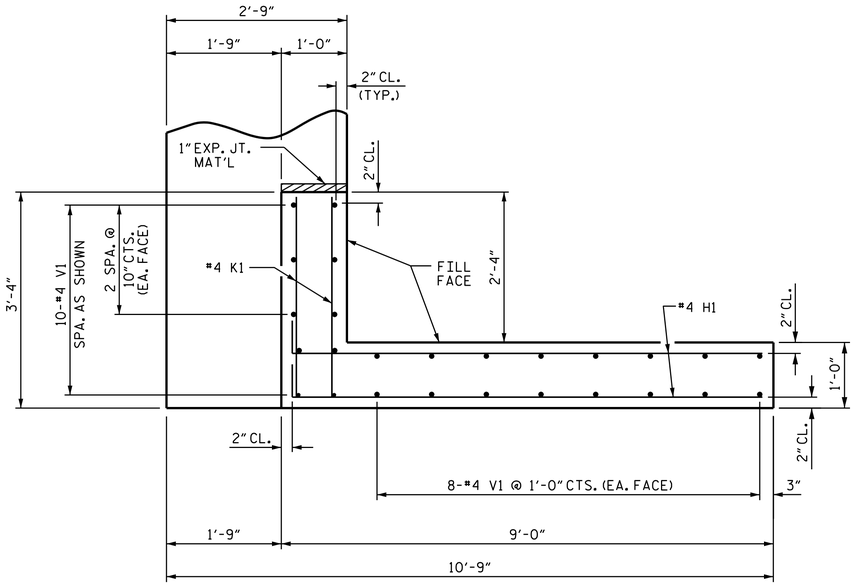


PLAN OF WING (W1)

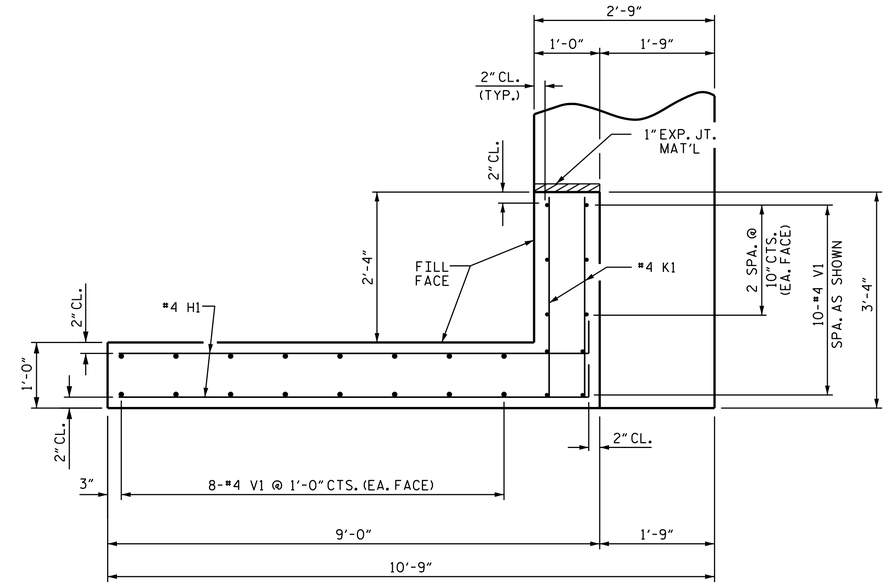


PLAN OF WING (W2)

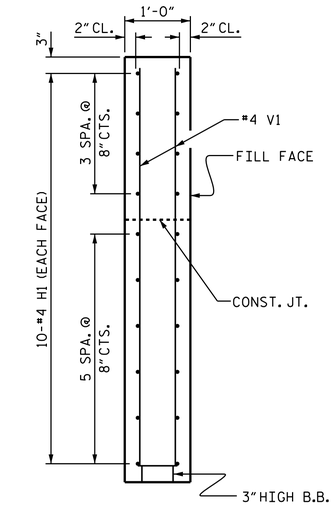


SECTION X-X

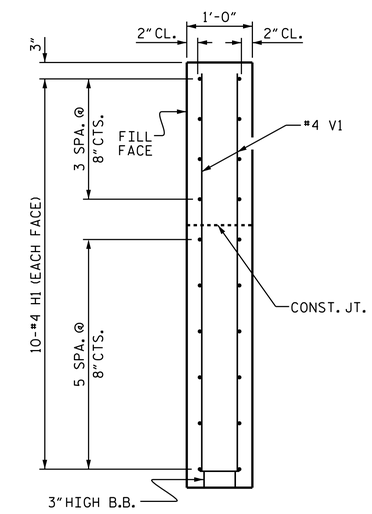


SECTION Y-Y

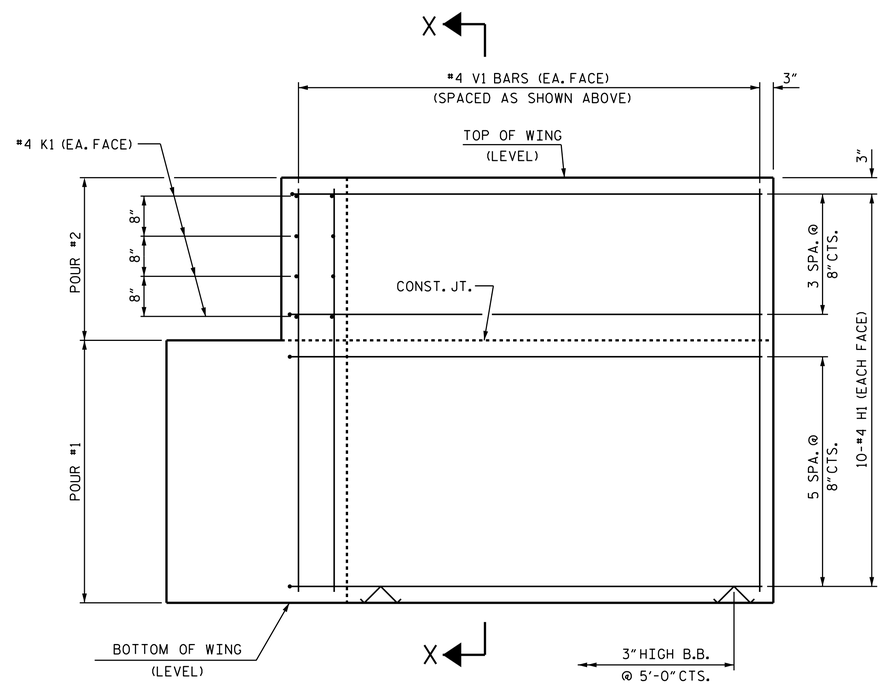


ELEVATION OF WING (W1)

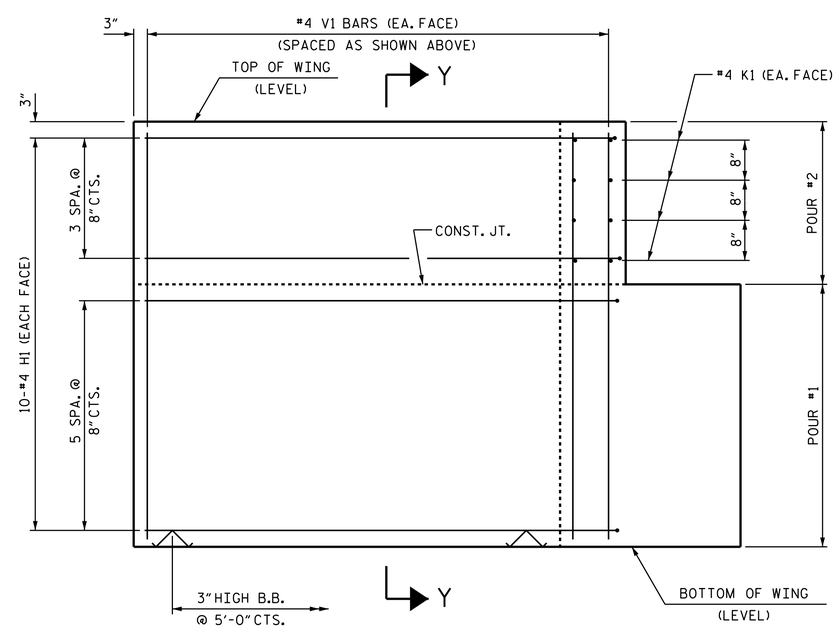


ELEVATION OF WING (W2)

WING DETAILS

PROJECT NO. B-5739

RANDOLPH COUNTY

STATION: 14+15.50 -L-

SHEET 3 OF 4

STATE OF NORTH CAROLINA
DEPARTMENT OF TRANSPORTATION
RALEIGH

SUBSTRUCTURE

END BENT
WING DETAILS

NORTH CAROLINA PROFESSIONAL SEAL 17230 ENGINEER WAEL S. ARAFAT

DocuSigned by: Wael Arafat
4139C12A32AB406...
2/27/2017

DOCUMENT NOT CONSIDERED FINAL UNLESS ALL SIGNATURES COMPLETED

| | |
|---|---|
| ASSEMBLED BY : J.S. SMITH | DATE : 8/22/16 |
| CHECKED BY : J.K. BOWLES | DATE : 8/29/16 |
| DRAWN BY : WJH 12/11 | REV. 4/15 MAA/TMG |
| CHECKED BY : AAC 12/11 | |

REVISIONS

| NO. | BY: | DATE: | NO. | BY: | DATE: |
|---|---|---|---|---|---|
| 1 | | | 3 | | |
| 2 | | | 4 | | |

SHEET NO. S-11

TOTAL SHEETS 14

17-FEB-2017 11:52
R:\Structures\Plans\FINAL PLANS\B-5739_SMU_E*.dgn
tbarbour

STD. NO. EB_33_90S4

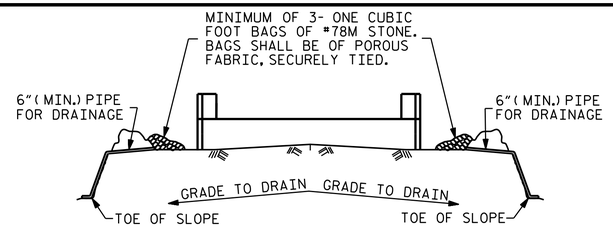


BAGGED STONE AND PIPE SHALL BE PLACED IMMEDIATELY AFTER COMPLETION OF END BENT EXCAVATION. PIPE MAY BE EITHER CONCRETE, CORRUGATED STEEL, CORRUGATED ALUMINUM ALLOY, OR CORRUGATED PLASTIC. PERFORATED PIPE WILL NOT BE ALLOWED.

BAGGED STONE SHALL REMAIN IN PLACE UNTIL THE ENGINEER DIRECTS THAT IT BE REMOVED. THE CONTRACTOR SHALL REMOVE AND DISPOSE OF SILT ACCUMULATIONS AT BAGGED STONE WHEN SO DIRECTED BY THE ENGINEER. BAGS SHALL BE REMOVED AND REPLACED WHENEVER THE ENGINEER DETERMINES THAT THEY HAVE DETERIORATED AND LOST THEIR EFFECTIVENESS.

NO SEPARATE PAYMENT WILL BE MADE FOR THIS WORK AND THE ENTIRE COST OF THIS WORK SHALL BE INCLUDED IN THE UNIT CONTRACT PRICE BID FOR THE SEVERAL PAY ITEMS.

## TEMPORARY DRAINAGE AT END BENT

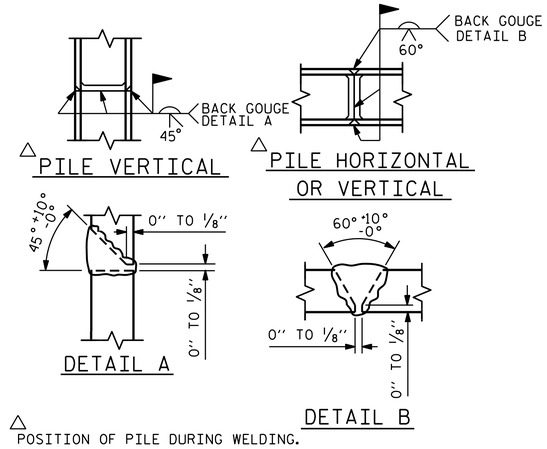


△ POSITION OF PILE DURING WELDING.

## PILE SPLICE DETAILS

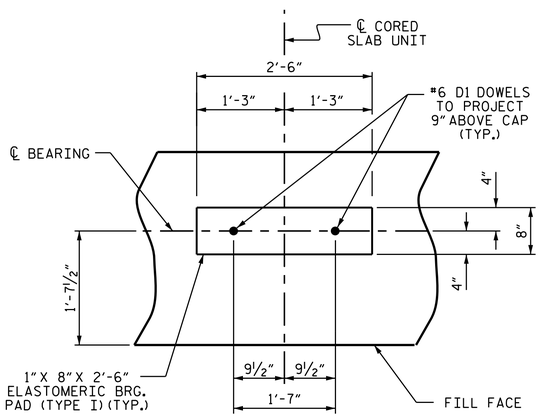


## DETAIL "A"

(END BENT No. 1 SHOWN, END BENT No. 2 SIMILAR BY ROTATION)

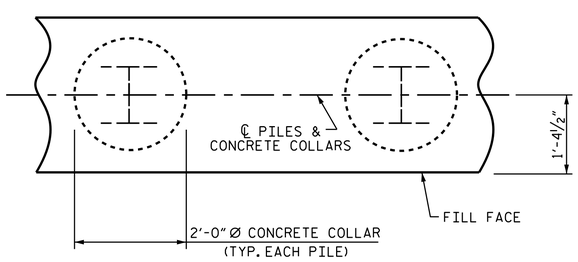


PLAN

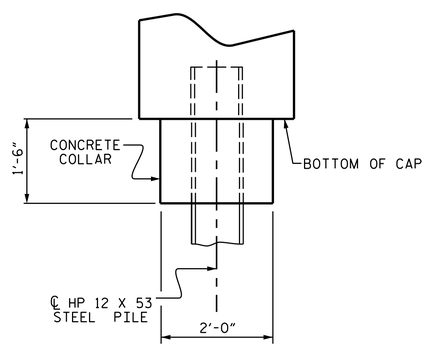


ELEVATION

## CORROSION PROTECTION FOR STEEL PILES DETAIL

(END BENT 1 SHOWN, END BENT 2 SIMILAR BY ROTATION)

## BAR TYPES

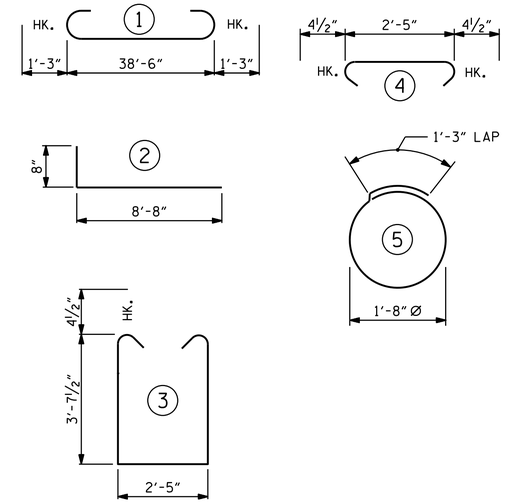


ALL BAR DIMENSIONS ARE OUT TO OUT.

| END BENT No. 1 | END BENT No. 2 |
|---|---|
| HP 12 X 53 STEEL PILES | HP 12 X 53 STEEL PILES |
| NO: 7 LIN. FT.= 119 | NO: 7 LIN. FT.= 144 |
| PILE EXCAVATION IN SOIL 70 LIN. FT. | PILE EXCAVATION IN SOIL 87 LIN. FT. |
| PILE EXCAVATION NOT IN SOIL 21 LIN. FT. | PILE EXCAVATION NOT IN SOIL 21 LIN. FT. |

## BILL OF MATERIAL

### FOR ONE END BENT

| BAR | NO. | SIZE | TYPE | LENGTH | WEIGHT |
|---|---|---|---|---|---|
| B1 | 8 | #9 | 1 | 41'-0" | 1115 |
| B2 | 28 | #4 | STR | 20'-7" | 385 |
| B3 | 10 | #4 | STR | 2'-5" | 16 |
| D1 | 22 | #6 | STR | 1'-6" | 50 |
| H1 | 40 | #4 | 2 | 9'-4" | 249 |
| K1 | 16 | #4 | STR | 2'-11" | 31 |
| S1 | 50 | #4 | 3 | 10'-5" | 348 |
| S2 | 50 | #4 | 4 | 3'-2" | 106 |
| S3 | 28 | #4 | 5 | 6'-6" | 122 |
| V1 | 52 | #4 | STR | 6'-5" | 223 |

REINFORCING STEEL (FOR ONE END BENT) LBS. 2,645

CLASS A CONCRETE BREAKDOWN (FOR ONE END BENT)

POUR #1 CAP, LOWER PART OF WINGS & COLLARS C.Y. 19.5

POUR #2 UPPER PART OF WINGS C.Y. 2.3

TOTAL CLASS A CONCRETE C.Y. 21.8

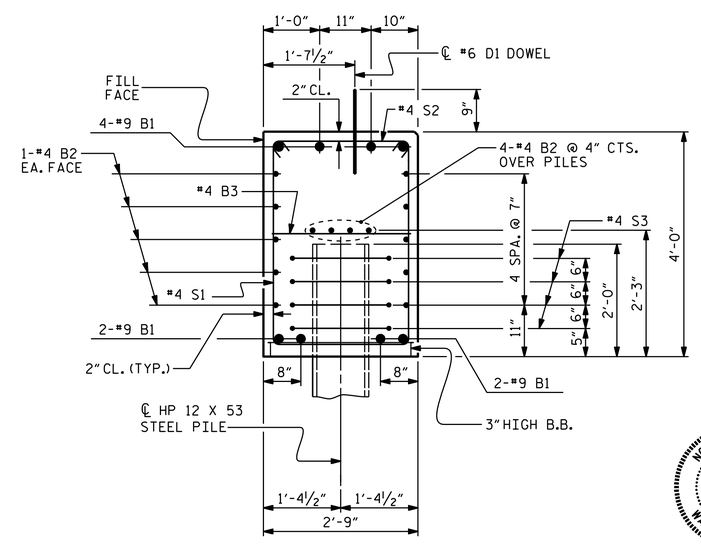


## SECTION A-A

(CONCRETE COLLAR NOT SHOWN FOR CLARITY. SEE "CORROSION PROTECTION FOR STEEL PILES DETAIL.")

PROJECT NO. B-5739

RANDOLPH COUNTY

STATION: 14+15.50 -L-

SHEET 4 OF 4

STATE OF NORTH CAROLINA
DEPARTMENT OF TRANSPORTATION
RALEIGH

SUBSTRUCTURE

END BENT Nos. 1 & 2 DETAILS

NORTH CAROLINA PROFESSIONAL SEAL 17230 ENGINEER WAEL S. ARAFAT

DocuSigned by: Wael Arafat 4139C12A32AB406...
2/27/2017

DOCUMENT NOT CONSIDERED FINAL UNLESS ALL SIGNATURES COMPLETED

| REVISIONS | | | | | | |
|---|---|---|---|---|---|---|
| NO. | BY: | DATE: | NO. | BY: | DATE: | |
| 1 | | | 3 | | | |
| 2 | | | 4 | | | |

SHEET NO. S-12

TOTAL SHEETS 14

STD. NO. EB_33_90S4

| | | | |
|---|---|---|---|
| ASSEMBLED BY : | J.S. SMITH | DATE : | 8/22/16 |
| CHECKED BY : | J.K. BOWLES | DATE : | 8/29/16 |
| DRAWN BY : | WJH | 12/11 | |
| CHECKED BY : | AAC | 12/11 | |

17-FEB-2017 11:52
R:\Structures\Plans\FINAL PLANS\B-5739_SMU_E*.dgn
tbarbour

| ESTIMATED QUANTITIES | | |
|---|---|---|
| BRIDGE @ STA. 14+15.50 -L- | RIP RAP CLASS II (2'-0" THICK) | GEOTEXTILE FOR DRAINAGE |
| | TONS | SQUARE YARDS |
| END BENT 1 | 240 | 265 |
| END BENT 2 | 255 | 280 |
| TOTAL | 495 | 545 |

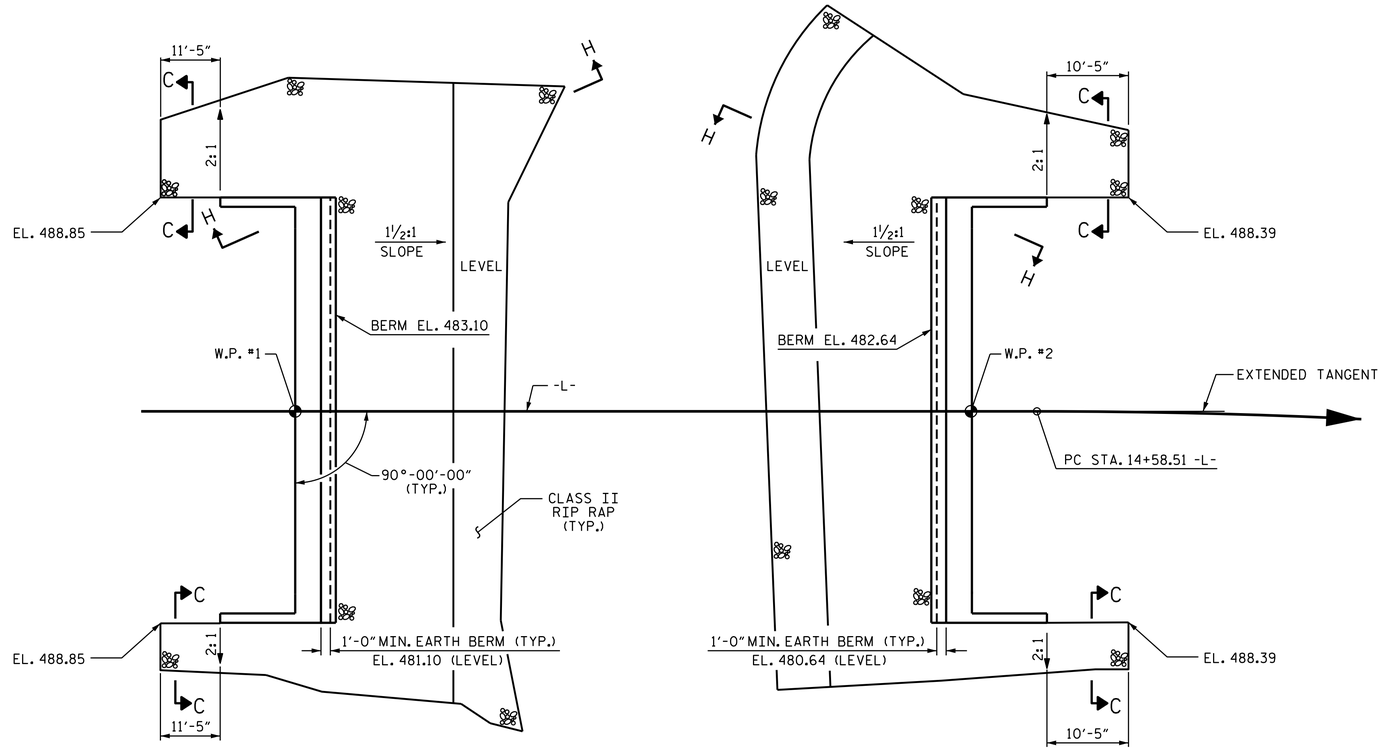


END BENT 1

END BENT 2

PLAN

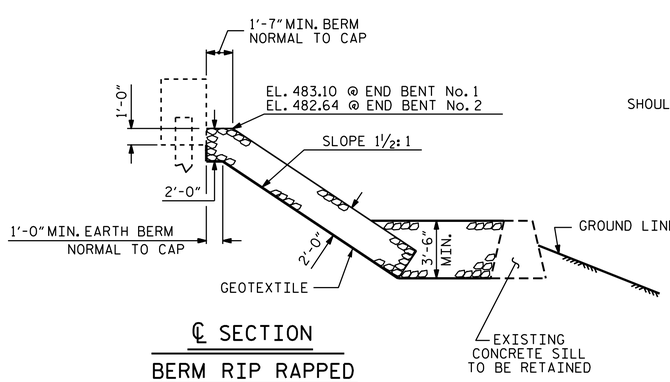


℄ SECTION

BERM RIP RAPPED

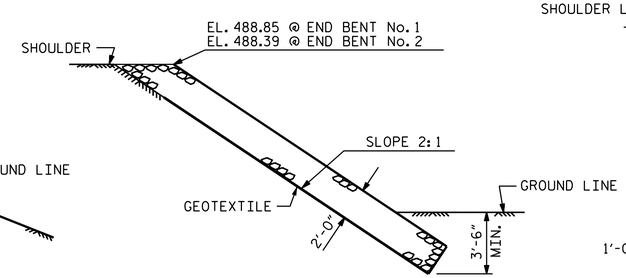


SECTION C-C

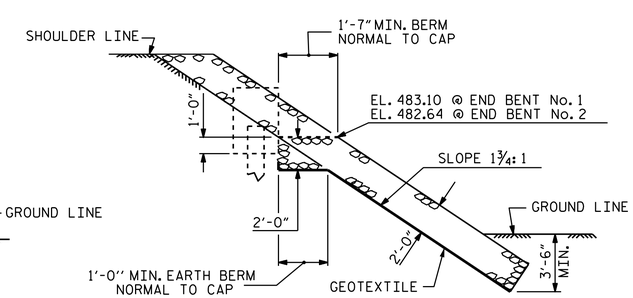


SECTION H-H

PROJECT NO. B-5739

RANDOLPH COUNTY

STATION: 14+15.50 -L-

STATE OF NORTH CAROLINA
DEPARTMENT OF TRANSPORTATION
RALEIGH

RIP RAP DETAILS

NORTH CAROLINA PROFESSIONAL SEAL 17230 ENGINEER WAEL S. ARAFAT

DocuSigned by: Wael Arafat
4139C12A32AB406...
2/27/2017

DOCUMENT NOT CONSIDERED FINAL UNLESS ALL SIGNATURES COMPLETED

| REVISIONS | | | | | | | |
|---|---|---|---|---|---|---|---|
| NO. | BY: | DATE: | NO. | BY: | DATE: | SHEET NO. | S-13 |
| 1 | | | 3 | | | TOTAL SHEETS | 14 |
| 2 | | | 4 | | | | |

| | | | |
|---|---|---|---|
| ASSEMBLED BY : J.S. SMITH | DATE : 9/1/2016 | | |
| CHECKED BY : J.D. HAWK | DATE : 9/26/16 | | |
| DRAWN BY : REK 1/84 | REV. 5/1/06R | TLA/GM | |
| CHECKED BY : RDU 1/84 | REV. 10/1/11 | MAA/GM | |
| | REV. 12/21/11 | MAA/GM | |

23-FEB-2017 09:51
R:\Structures\Plans\FINAL PLANS\B-5739_SMU_RR.dgn
tbarbour

STD. NO. RR1

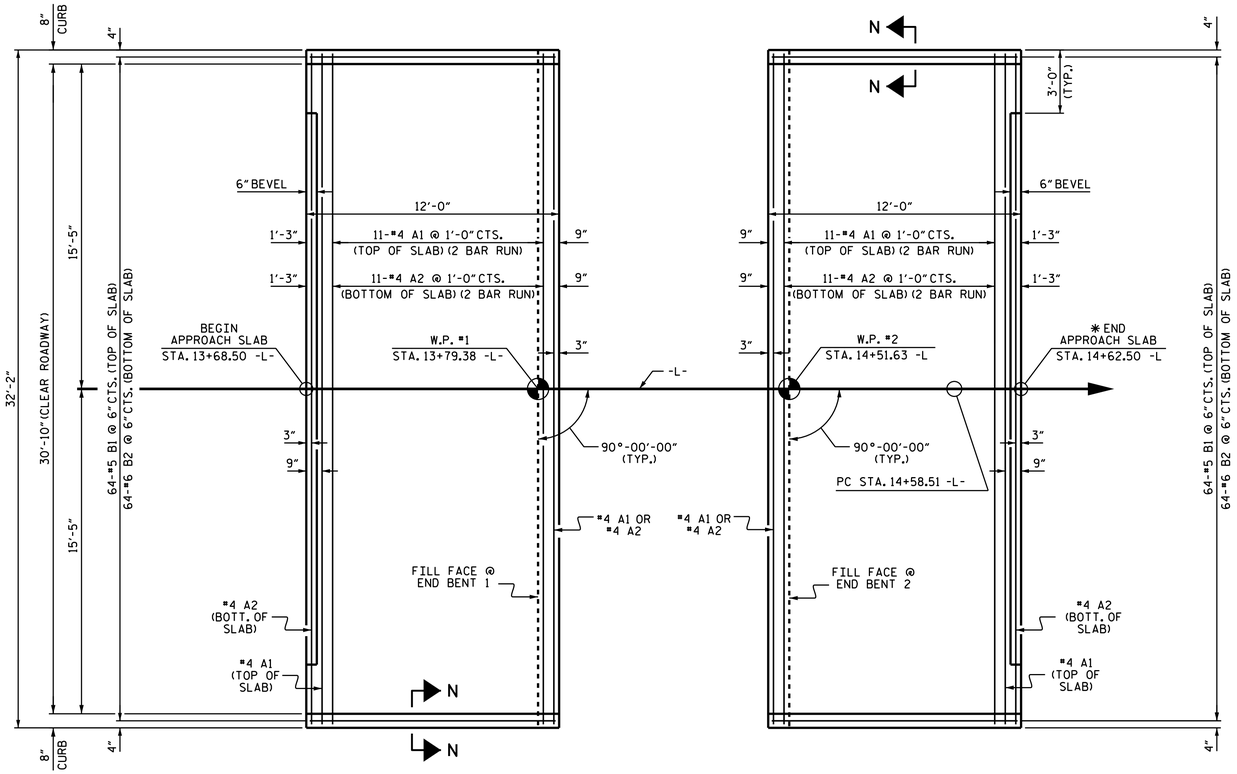


PLAN @ END BENT No. 1

PLAN @ END BENT No. 2

DIMENSIONS SHOWN ARE TYPICAL FOR BOTH APPROACH SLABS.

* END APPROACH SLAB STATION IS ALONG THE EXTENDED TANGENT

## NOTES

FOR BRIDGE APPROACH FILL INCLUDING GEOTEXTILE, 4" Ø DRAINAGE PIPE, AND #78M STONE BACKFILL, SEE ROADWAY PLANS.

GEOTEXTILE SHALL BE TYPE 1 IN ACCORDANCE WITH THE STANDARD SPECIFICATIONS SECTION 1056.

#78M STONE BACKFILL (CLASS V SELECT MATERIAL) SHALL BE IN ACCORDANCE WITH STANDARD SPECIFICATIONS SECTION 1016.

#78M STONE BACKFILL IS TO BE CONTINUOUS ALONG FILL FACE OF BACKWALL FROM OUTSIDE EDGE TO OUTSIDE EDGE OF APPROACH SLAB.

FOR THE 4" Ø DRAINAGE PIPE OUTLET(S), SEE ROADWAY STANDARD DRAWINGS.

AREA BETWEEN THE WINGWALL AND APPROACH SLAB SHALL BE GRADED TO DRAIN THE WATER AWAY FROM THE FILL FACE OF THE BRIDGE AND SHALL BE PAVED. SEE ROADWAY PLANS.

APPROACH SLAB GROOVING IS NOT REQUIRED.

## BILL OF MATERIAL

### APPROACH SLAB AT EB 1

| BAR | NO. | SIZE | TYPE | LENGTH | WEIGHT |
|---|---|---|---|---|---|
| * A1 | 26 | #4 | STR | 16'-11" | 294 |
| A2 | 26 | #4 | STR | 16'-9" | 291 |
| * B1 | 64 | #5 | STR | 11'-2" | 745 |
| B2 | 64 | #6 | STR | 11'-8" | 1121 |
| REINFORCING STEEL | | | | LBS. | 1,412 |
| * EPOXY COATED REINFORCING STEEL | | | | LBS. | 1,039 |
| CLASS AA CONCRETE | | | | C. Y. | 19.5 |

### APPROACH SLAB AT EB 2

| BAR | NO. | SIZE | TYPE | LENGTH | WEIGHT |
|---|---|---|---|---|---|
| * A1 | 26 | #4 | STR | 16'-11" | 294 |
| A2 | 26 | #4 | STR | 16'-9" | 291 |
| * B1 | 64 | #5 | STR | 11'-2" | 745 |
| B2 | 64 | #6 | STR | 11'-8" | 1121 |
| REINFORCING STEEL | | | | LBS. | 1,412 |
| * EPOXY COATED REINFORCING STEEL | | | | LBS. | 1,039 |
| CLASS AA CONCRETE | | | | C. Y. | 19.5 |

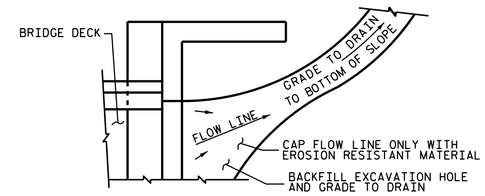


NOTE: IF THE APPROACH SLAB IS NOT CONSTRUCTED IMMEDIATELY AFTER THE BACKFILLING OF THE END BENT EXCAVATION, GRADE TO DRAIN TO THE BOTTOM OF THE SLOPE AND PROVIDE EROSION RESISTANT MATERIAL, SUCH AS FIBERGLASS ROVING OR AS DIRECTED BY THE ENGINEER TO PREVENT SOIL EROSION AND TO PROTECT THE AREA ADJACENT TO THE STRUCTURE. THE CONTRACTOR WILL BE REQUIRED TO REMOVE THESE MATERIALS PRIOR TO CONSTRUCTION OF THE APPROACH SLAB.

TEMPORARY DRAINAGE DETAIL

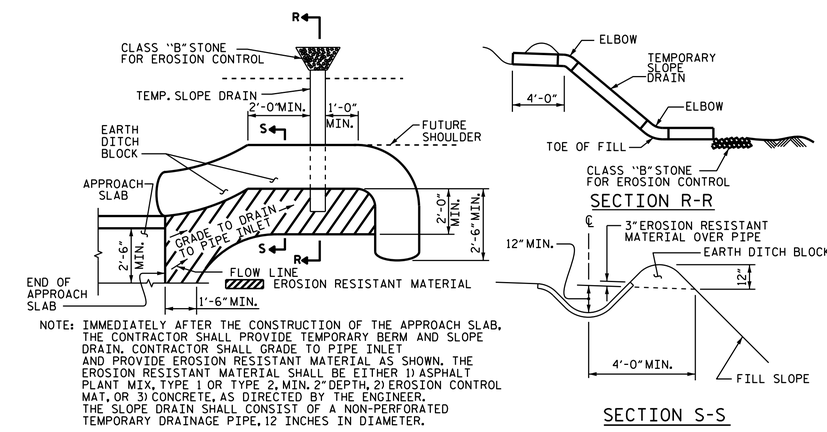


NOTE: IMMEDIATELY AFTER THE CONSTRUCTION OF THE APPROACH SLAB, THE CONTRACTOR SHALL PROVIDE TEMPORARY BERM AND SLOPE DRAIN. CONTRACTOR SHALL GRADE TO PIPE INLET AND PROVIDE EROSION RESISTANT MATERIAL AS SHOWN. THE EROSION RESISTANT MATERIAL SHALL BE EITHER 1) ASPHALT PLANT MIX, TYPE 1 OR TYPE 2, MIN. 2" DEPTH, 2) EROSION CONTROL MAT, OR 3) CONCRETE, AS DIRECTED BY THE ENGINEER. THE SLOPE DRAIN SHALL CONSIST OF A NON-PERFORATED TEMPORARY DRAINAGE PIPE, 12 INCHES IN DIAMETER.

PLAN VIEW

TEMPORARY BERM AND SLOPE DRAIN DETAILS

(TO BE USED WHEN SHOULDER BERM GUTTER IS REQUIRED)

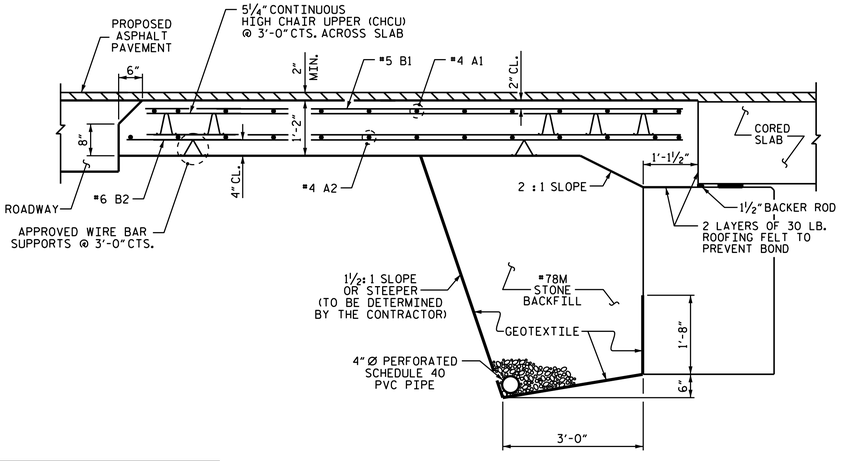


SECTION THRU SLAB

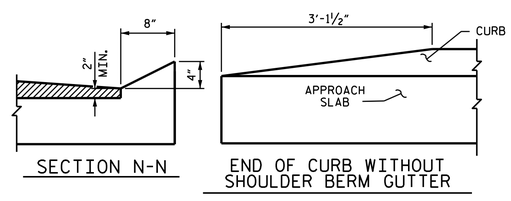


SECTION N-N

END OF CURB WITHOUT SHOULDER BERM GUTTER

CURB DETAILS

| SPLICE LENGTHS | | |
|---|---|---|
| BAR SIZE | EPOXY COATED | UNCOATED |
| #4 | 2'-0" | 1'-9" |
| #5 | 2'-6" | 2'-2" |
| #6 | 3'-10" | 2'-7" |

PROJECT NO. B-5739

RANDOLPH COUNTY

STATION: 14+15.50 -L-

STATE OF NORTH CAROLINA
DEPARTMENT OF TRANSPORTATION
RALEIGH

STANDARD
BRIDGE APPROACH SLAB
FOR PRESTRESSED CONCRETE
CORED SLAB UNIT
(SUB-REGIONAL TIER)
90° SKEW

NORTH CAROLINA PROFESSIONAL SEAL 17230 ENGINEER WAEL S. ARAFAT

DocuSigned by: Wael Arafat
4139C12A32AB406...
2/27/2017

DOCUMENT NOT CONSIDERED FINAL UNLESS ALL SIGNATURES COMPLETED

| REVISIONS | | | | | | | |
|---|---|---|---|---|---|---|---|
| NO. | BY: | DATE: | NO. | BY: | DATE: | SHEET NO. | S-14 |
| 1 | | | 3 | | | TOTAL SHEETS | 14 |
| 2 | | | 4 | | | | |

STD. NO. BAS_33_90S

| | | | |
|---|---|---|---|
| ASSEMBLED BY : J.S. SMITH | | DATE : 8/22/16 | |
| CHECKED BY : J.K. BOWLES | | DATE : 8/29/16 | |
| DRAWN BY : SHS/MAA 5-09 | | | |
| CHECKED BY : BCH 5-09 | REV. 9-15 | MAA/TMG | |

23-FEB-2017 09:51
R:\Structures\Plans\FINAL PLANS\B-5739_SMU_AS.dgn
tbarbour

# STANDARD NOTES

## DESIGN DATA:

| | |
|---|---|
| SPECIFICATIONS | A.A.S.H.T.O. (CURRENT) |
| LIVE LOAD | SEE PLANS |
| IMPACT ALLOWANCE | SEE A.A.S.H.T.O. |
| STRESS IN EXTREME FIBER OF | |
| STRUCTURAL STEEL - AASHTO M270 GRADE 36 | 20,000 LBS. PER SQ. IN. |
| - AASHTO M270 GRADE 50W | 27,000 LBS. PER SQ. IN. |
| - AASHTO M270 GRADE 50 | 27,000 LBS. PER SQ. IN. |
| REINFORCING STEEL IN TENSION | |
| GRADE 60 | 24,000 LBS. PER SQ. IN. |
| CONCRETE IN COMPRESSION | 1,200 LBS. PER SQ. IN. |
| CONCRETE IN SHEAR | SEE A.A.S.H.T.O. |
| STRUCTURAL TIMBER - TREATED OR | |
| UNTREATED - EXTREME FIBER STRESS | 1,800 LBS. PER SQ. IN. |
| COMPRESSION PERPENDICULAR TO GRAIN OF TIMBER | 375 LBS. PER SQ. IN. |
| EQUIVALENT FLUID PRESSURE OF EARTH | 30 LBS. PER CU. FT. (MINIMUM) |

## MATERIAL AND WORKMANSHIP:

EXCEPT AS MAY OTHERWISE BE SPECIFIED ON PLANS OR IN THE SPECIAL PROVISIONS, ALL MATERIAL AND WORKMANSHIP SHALL BE IN ACCORDANCE WITH THE 2012 "STANDARD SPECIFICATIONS FOR ROADS AND STRUCTURES" OF THE N. C. DEPARTMENT OF TRANSPORTATION.

STEEL SHEET PILING FOR PERMANENT OR TEMPORARY APPLICATIONS SHALL BE HOT ROLLED.

## CONCRETE:

UNLESS OTHERWISE REQUIRED ON PLANS, CLASS A CONCRETE SHALL BE USED FOR ALL PORTIONS OF ALL STRUCTURES WITH THE EXCEPTION THAT: CLASS AA CONCRETE SHALL BE USED IN BRIDGE SUPERSTRUCTURES, ABUTMENT BACKWALLS, AND APPROACH SLABS; AND CLASS B CONCRETE SHALL BE USED FOR SLOPE PROTECTION AND RIP RAP.

## CONCRETE CHAMFERS:

UNLESS OTHERWISE NOTED ON THE PLANS, ALL EXPOSED CORNERS ON STRUCTURES SHALL BE CHAMFERED 3/4" WITH THE FOLLOWING EXCEPTIONS: TOP CORNERS OF CURBS MAY BE ROUNDED TO 1-1/2" RADIUS WHICH IS BUILT INTO CURB FORMS; CORNERS OF TRANSVERSE FLOOR EXPANSION JOINTS SHALL BE ROUNDED WITH A 1/4" FINISHING TOOL UNLESS OTHERWISE REQUIRED ON PLANS; AND CORNERS OF EXPANSION JOINTS IN THE ROADWAY FACES AND TOPS OF CURBS AND SIDEWALKS SHALL BE ROUNDED TO A 1/4" RADIUS WITH A FINISHING STONE OR TOOL UNLESS OTHERWISE REQUIRED ON PLANS.

## DOWELS:

DOWELS WHEN INDICATED ON PLANS AS FOR CULVERT EXTENSIONS, SHALL BE EMBEDDED AT LEAST 12" INTO THE OLD CONCRETE AND GROUTED INTO PLACE WITH 1:2 CEMENT MORTAR.

## ALLOWANCE FOR DEAD LOAD DEFLECTION, SETTLEMENT, ETC. IN CASTING SUPERSTRUCTURES:

BRIDGES SHALL BE BUILT ON THE GRADE OR VERTICAL CURVE SHOWN ON PLANS. SLABS, CURBS AND PARAPETS SHALL CONFORM TO THE GRADE OR CURVE.

ALL DIMENSIONS WHICH ARE GIVEN IN SECTION AND ARE AFFECTED BY DEAD LOAD DEFLECTIONS ARE DIMENSIONS AT CENTER LINE OF BEARING UNLESS OTHERWISE NOTED ON PLANS. IN SETTING FORMS FOR STEEL BEAM BRIDGES AND PRESTRESSED CONCRETE GIRDER BRIDGES, ADJUSTMENTS SHALL BE MADE DUE TO THE DEAD LOAD DEFLECTIONS FOR THE ELEVATIONS SHOWN. WHERE BLOCKS ARE SHOWN OVER BEAMS FOR BUILDING UP TO THE SLAB, THE VERTICAL DIMENSIONS OF THE BLOCKS SHALL BE ADJUSTED BETWEEN BEARINGS TO COMPENSATE FOR DEAD LOAD DEFLECTIONS, VERTICAL CURVE ORDINATE, AND ACTUAL BEAM CAMBER. WHERE BOTTOM OF SLAB IS IN LINE WITH BOTTOM OF TOP FLANGES, DEPTH OF SLAB BETWEEN BEARINGS SHALL BE ADJUSTED TO COMPENSATE FOR DEAD LOAD DEFLECTION, VERTICAL CURVE ORDINATE, AND ACTUAL BEAM CAMBER.

IN SETTING FALSEWORK AND FORMS FOR REINFORCED CONCRETE SPANS, AN ALLOWANCE SHALL BE MADE FOR DEAD LOAD DEFLECTIONS, SETTLEMENT OF FALSEWORK, AND PERMANENT CAMBER WHICH SHALL BE PROVIDED FOR IN ADDITION TO THE ELEVATIONS SHOWN. AFTER REMOVAL OF THE FALSEWORK, THE FINISHED STRUCTURES SHALL CONFORM TO THE PROFILE AND ELEVATIONS SHOWN ON THE PLANS AND CONSTRUCTION ELEVATIONS FURNISHED BY THE ENGINEER.

DETAILED DRAWINGS FOR FALSEWORK OR FORMS FOR BRIDGE SUPERSTRUCTURE AND ANY STRUCTURE OR PARTS OF A STRUCTURE AS NOTED ON THE PLANS SHALL BE SUBMITTED TO THE ENGINEER FOR APPROVAL BEFORE CONSTRUCTION OF THE FALSEWORK OR FORMS IS STARTED.

## REINFORCING STEEL:

ALL REINFORCING STEEL SHALL BE DEFORMED. DIMENSIONS RELATIVE TO PLACEMENT OF REINFORCING ARE TO CENTERS OF BARS UNLESS OTHERWISE INDICATED IN THE PLANS. DIMENSIONS ON BAR DETAILS ARE TO CENTERS OF BARS OR ARE OUT TO OUT AS INDICATED ON PLANS.

WIRE BAR SUPPORTS SHALL BE PROVIDED FOR REINFORCING STEEL WHERE INDICATED ON THE PLANS. WHEN BAR SUPPORT PIECES ARE PLACED IN CONTINUOUS LINES, THEY SHALL BE SO PLACED THAT THE ENDS OF THE SUPPORTING WIRES SHALL BE LAPPED TO LOCK LEGS ON ADJOINING PIECES.

## STRUCTURAL STEEL:

AT THE CONTRACTOR'S OPTION, HE MAY SUBSTITUTE 7/8" Ø SHEAR STUDS FOR THE 3/4" Ø STUDS SPECIFIED ON THE PLANS. THIS SUBSTITUTION SHALL BE MADE AT THE RATE OF 3 - 7/8" Ø STUDS FOR 4 - 3/4" Ø STUDS, AND STUD SPACING CHANGES SHALL BE MADE AS NECESSARY TO PROVIDE THE SAME EQUIVALENT NUMBER OF 7/8" Ø STUDS ALONG THE BEAM AS SHOWN FOR 3/4" Ø STUDS BASED ON THE RATIO OF 3 - 7/8" Ø STUDS FOR 4 - 3/4" Ø STUDS. STUDS OF THE LENGTH SPECIFIED ON THE PLANS MUST BE PROVIDED. THE MAXIMUM SPACING SHALL BE 2'-0".

EXCEPT AT THE INTERIOR SUPPORTS OF CONTINUOUS BEAMS WHERE THE COVER PLATE IS IN CONTACT WITH BEARING PLATE, THE CONTRACTOR MAY, AT HIS OPTION, SUBSTITUTE FOR THE COVER PLATES DESIGNATED ON THE PLANS COVER PLATES OF THE EQUIVALENT AREA PROVIDED THESE PLATES ARE AT LEAST 5/16" IN THICKNESS AND DO NOT EXCEED A WIDTH EQUAL TO THE FLANGE WIDTH LESS 2" OR A THICKNESS EQUAL TO 2 TIMES THE FLANGE THICKNESS. THE SIZE OF FILLET WELDS SHALL CONFORM TO THE REQUIREMENTS OF THE CURRENT ANSI/AASHTO/AWS "BRIDGE WELDING CODE". ELECTROSLAG WELDING WILL NOT BE PERMITTED.

WITH THE SOLE EXCEPTION OF EDGES AT SURFACES WHICH BEAR ON OTHER SURFACES, ALL SHARP EDGES AND ENDS OF SHAPES AND PLATES SHALL BE SLIGHTLY ROUNDED BY SUITABLE MEANS TO A RADIUS OF APPROXIMATELY 1/16 INCH OR EQUIVALENT FLAT SURFACE AT A SUITABLE ANGLE PRIOR TO PAINTING, GALVANIZING, OR METALLIZING.

## HANDRAILS AND POSTS:

METAL STANDARDS AND FACES OF THE CONCRETE END POSTS FOR THE METAL RAIL SHALL BE SET NORMAL TO THE GRADE OF THE CURB, UNLESS OTHERWISE SHOWN ON PLANS. THE METAL RAIL AND TOPS OF CONCRETE POSTS USED WITH THE ALUMINUM RAIL SHALL BE BUILT PARALLEL TO THE GRADE OF THE CURB.

METAL HANDRAILS SHALL BE IN ACCORDANCE WITH THE PLANS. RAILS SHALL BE AS MANUFACTURED FOR BRIDGE RAILING. CASTINGS SHALL BE OF A UNIFORM APPEARANCE. FINS AND OTHER DEFORMATIONS RESULTING FROM CASTING OR OTHERWISE SHALL BE REMOVED IN A MANNER SO THAT A UNIFORM COLORING OF THE COMPLETED CASTING SHALL BE OBTAINED. CASTINGS WITH DISCOLORATIONS OR OF NON-UNIFORM COLORING WILL NOT BE ACCEPTED. CERTIFIED MILL REPORTS ARE REQUIRED FOR METAL RAILS AND POSTS.

## SPECIAL NOTES:

GENERALLY, IN CASE OF DISCREPANCY, THIS STANDARD SHEET OF NOTES SHALL GOVERN OVER THE SPECIFICATIONS, BUT THE REMAINDER OF THE PLANS SHALL GOVERN OVER NOTES HEREON, AND SPECIAL PROVISIONS SHALL GOVERN OVER ALL. SEE SPECIFICATIONS ARTICLE 105-4.

ENGLISH

JANUARY, 1990

STD. NO. SN