09/08/95

TIP PROJECT: SS-4908AI /W-5208J PROJECTS: US 401

See Sheet 1-A For Index of Sheets
See Sheet 2 For Conventional Symbols

STATE OF NORTH CAROLINA
DIVISION OF HIGHWAYS

HOKE COUNTY

STATE	STATE PROJECT REFERENCE NO.	SHEET NO.	TOTAL SHEETS
N.C.	SS-4908AI/W-5208J	1	

WBS ELEMENT	F.A. PROJ. NO.	DESCRIPTION
SS-4908AI		
43574.1.1		PE
43574.2.1		ROW
43574.3.1		CONST.
W-5208J		
45338.1.10	HSIP-0401(254)	PE
45338.2.10	HSIP-0401(254)	ROW
45338.3.10	HSIP-0401(254)	CONST.

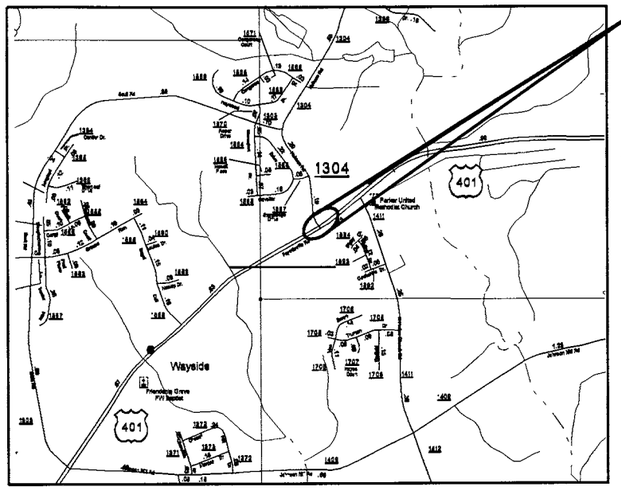

PROJECT SS-4908AI LOCATION

PART I: PROJECT SS-4908AI

LOCATION: *US 401 AT SR 1304 (HOBSON RD.)*

TYPE OF WORK: *GRADING, PAVING, DRAINAGE, CONCRETE ISLANDS, AND THEMOPLASTIC MARKINGS & MARKERS*

PART II: PROJECT W-5208J

LOCATION: *US 401 AT SR 1305 (WAYSIDE RD.) AND SR 1409 (LINDSAY RD)*

TYPE OF WORK: *GRADING, PAVING, DRAINAGE, CONCRETE ISLANDS, SIGNAL AND THEMOPLASTIC MARKINGS & MARKERS*

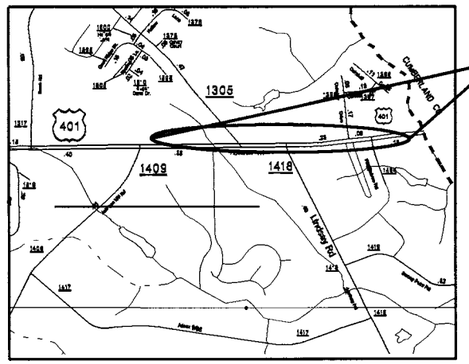

PROJECT W-5208J LOCATION

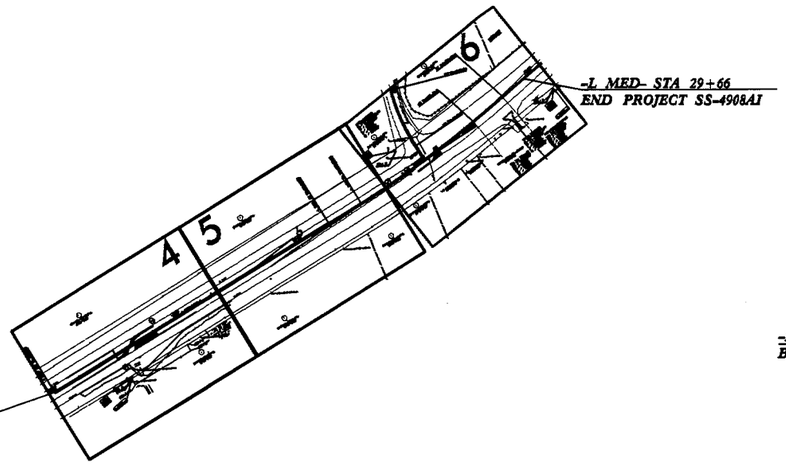

-L MED- STA 29+66
END PROJECT SS-4908AI

-L MED- STA. 10+00
BEGIN PROJECT SS-4908AI

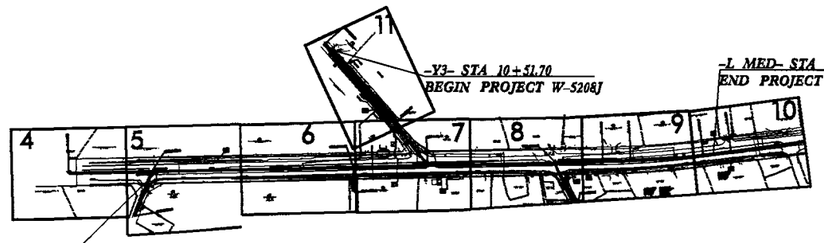

-Y3- STA 10+51.70
BEGIN PROJECT W-5208J

-L MED- STA 55+40
END PROJECT W-5208J

-L MED- STA. 15+93.94
BEGIN PROJECT W-5208J

PROJECT LENGTH

LENGTH ROADWAY PROJ. SS-4908AI 0.37 MILES
LENGTH ROADWAY PROJ. W-5280J 0.93 MILES

TOTAL: 1.30 MILES

Prepared In the Office of:
DIVISION OF HIGHWAYS

DIVISION 8
DESIGN & CONSTRUCT UNIT
902 N. SANDHILLS BLVD.
ABERDEEN NC 28315

DIVISION OF HIGHWAYS

2012 STANDARD SPECIFICATIONS

RIGHT OF WAY DATE:

LETTING DATE:

DIVISION DESIGN & CONSTRUCT ENGINEER

NORTH CAROLINA PROFESSIONAL SEAL 26930 ENGINEER GREG S. DAVIS

5-30-14

29-MAY-2014 15:50
C:\div8_projects\rdy\HOKE\nc401@sr_1305\wayside_rd\psh\combined_tsh.dgn
gsdavis
AT 08CAD-270410

PROJECT REFERENCE NO.	SHEET NO.
SS-4908AI, W-5208J	1-A

INDEX OF SHEETS

SHEET NUMBER	SHEET
1	TITLE SHEET (PART I & PART II)
1-A	INDEX OF SHEETS
2	CONVENTIONAL SYMBOLS
3 THRU 3A	SUMMARY OF QUANTITIES

PART I : SS-4908AI

1	TITLE SHEET
2 THRU 2-C	TYPICAL SECTIONS
3	SUMMARY OF EARTHWORKS, ETC.
3-A	DRAINAGE SUMMARY
4 THRU 6	PLAN SHEETS
PMP-1 THRU PMP-3	PAVEMENT MARKING PLANS
ECP-1 THRU ECP-5	EROSION CONTROL PLANS
X-A	CROSS-SECTION SUMMARY
X-1 THRU X-12	CROSS-SECTIONS -L MED-

PART II : W-5208J

1	TITLE SHEET
2 THRU 2-G	TYPICAL SECTIONS
2-H	DETAIL - RELOCATION OF 8" WATER PIPE AT PROP. STORM DRAINAGE
3	SUMMARY OF EARTHWORKS, ETC.
3-A	DRAINAGE SUMMARY
4 THRU 11	PLAN SHEETS
PMP-1 THRU PMP-7	PAVEMENT MARKING PLANS
SIG-1 THRU SIG-4	SIGNAL PLANS
ECP-1 THRU ECP-10	EROSION CONTROL PLANS
X-A	CROSS-SECTION SUMMARY
X-1 THRU X-45	CROSS-SECTIONS -L MED-
X-46 THRU X-57	CROSS-SECTIONS -Y3-

GENERAL NOTES

GRADING AND SURFACING OR RESURFACING AND WIDENING:

THE GRADE LINES SHOWN DENOTE THE FINISHED ELEVATION OF THE PROPOSED SURFACING AT GRADE POINTS SHOWN ON THE TYPICAL SECTIONS. WHERE NO GRADE LINES ARE SHOWN, THE PROFILES SHOWN DENOTE THE TOP ELEVATION OF THE EXISTING PAVEMENT ALONG THE CENTER LINE OF SURVEY ON WHICH THE PROPOSED RESURFACING WILL BE PLACED. GRADE LINES MAY BE ADJUSTED BY THE ENGINEER IN ORDER TO SECURE THE PROPER TIE-IN.

CLEARING

CLEARING ON THIS PROJECT SHALL BE PERFORMED TO THE LIMITS ESTABLISHED BY METHOD III.

SHOULDER CONSTRUCTION:

ASPHALT, EARTH, AND CONCRETE SHOULDER CONSTRUCTION ON THE HIGH SIDE OF SUPERELEVATED CURVES SHALL BE IN ACCORDANCE WITH STD. NO. 560.01.

UTILITIES

ANY RELOCATION OF EXISTING UTILITIES EXCEPT AS NOTED IN PLANS, WILL BE ACCOMPLISHED BY OTHERS PRIOR TO THE DATE OF AVAILABILITY.

2012 ROADWAY ENGLISH STANDARD DRAWINGS

The following Roadway Standards as appear in "Roadway Standard Drawings" Highway Design Branch - N. C. Department of Transportation - Raleigh, N. C., Dated January 17, 2012 are applicable to this project and by reference hereby are considered o part of these plans:

STD.NO.	TITLE
225.01	Guide for Grading Subgrade - Interstate amd Freeway
225.05	Method of Obtaining Superelevation - Divided Highway
560.01	Method of Shoulder Construction - High Side of Superelevated Curve - Method I
560.02	Method of Shoulder Construction - High Side of Superelevated Curve - Method II
654.01	Pavement Repairs
840.14	Concrete Drop Inlet
840.22	Frames and Wide Slot Sag Grates
840.25	Anchorage for Frames - Brick, Concrete, or Precast
840.46	Traffic Bearing Drainage Structures
840.66	Drainage Structure Steps
852.01	Concrete Islands
852.04	Method for Placement of Drop Inlets in Grassed Median
852.01	Concrete Islands
852.06	Method for Placement of Drop Inlets in Concrete Islands
876.02	Guide for Rip Rap at Pipe Outlets

8/17/95

23-MAY-2014 13:37
C:\Users\pdesai\Desktop\HOKE\US401bsr_1304(hobson_rd)\psh\indexofshts_psh.dgn
default
$$USER1 = 0.000000
$$USER2 = 0.000000
$$USER3 = 0.000000
$$USER4 = 0.000000
$$USER5 = 0.000000

12/05/11

PROJECT REFERENCE NO.	SHEET NO.
SS-4908AJ, W-5208J	2

Note: Not to Scale

****S.U.E. = Subsurface Utility Engineering***

STATE OF NORTH CAROLINA
DIVISION OF HIGHWAYS

CONVENTIONAL PLAN SHEET SYMBOLS

BOUNDARIES AND PROPERTY:

- State Line
- County Line
- Township Line
- City Line
- Reservation Line
- Property Line
- Existing Iron Pin — EIP
- Property Corner
- Property Monument — ECM
- Parcel/Sequence Number — 123
- Existing Fence Line
- Proposed Woven Wire Fence
- Proposed Chain Link Fence
- Proposed Barbed Wire Fence
- Existing Wetland Boundary — WLB
- Proposed Wetland Boundary — WLB
- Existing Endangered Animal Boundary — EAB
- Existing Endangered Plant Boundary — EPB
- Known Soil Contamination: Area or Site
- Potential Soil Contamination: Area or Site

BUILDINGS AND OTHER CULTURE:

- Gas Pump Vent or U/G Tank Cap
- Sign — S
- Well — W
- Small Mine
- Foundation
- Area Outline
- Cemetery
- Building
- School
- Church
- Dam

HYDROLOGY:

- Stream or Body of Water
- Hydro, Pool or Reservoir
- Jurisdictional Stream — JS
- Buffer Zone 1 — BZ 1
- Buffer Zone 2 — BZ 2
- Flow Arrow
- Disappearing Stream
- Spring
- Wetland
- Proposed Lateral, Tail, Head Ditch — FLOW
- False Sump

RAILROADS:

- Standard Gauge — CSX TRANSPORTATION
- RR Signal Milepost — MILEPOST 35
- Switch — SWITCH
- RR Abandoned
- RR Dismantled

RIGHT OF WAY:

- Baseline Control Point
- Existing Right of Way Marker
- Existing Right of Way Line
- Proposed Right of Way Line
- Proposed Right of Way Line with Iron Pin and Cap Marker
- Proposed Right of Way Line with Concrete or Granite R/W Marker
- Proposed Control of Access Line with Concrete C/A Marker
- Existing Control of Access — C/A
- Proposed Control of Access
- Existing Easement Line — E
- Proposed Temporary Construction Easement — E
- Proposed Temporary Drainage Easement — TDE
- Proposed Permanent Drainage Easement — PDE
- Proposed Permanent Drainage / Utility Easement — DUE
- Proposed Permanent Utility Easement — PUE
- Proposed Temporary Utility Easement — TUE
- Proposed Aerial Utility Easement — AUE
- Proposed Permanent Easement with Iron Pin and Cap Marker

ROADS AND RELATED FEATURES:

- Existing Edge of Pavement
- Existing Curb
- Proposed Slope Stakes Cut — C
- Proposed Slope Stakes Fill — F
- Proposed Curb Ramp — CR
- Existing Metal Guardrail
- Proposed Guardrail
- Existing Cable Guiderail
- Proposed Cable Guiderail
- Equality Symbol
- Pavement Removal

VEGETATION:

- Single Tree
- Single Shrub
- Hedge
- Woods Line
- Orchard
- Vineyard — Vineyard

EXISTING STRUCTURES:

MAJOR:

- Bridge, Tunnel or Box Culvert — CONC
- Bridge Wing Wall, Head Wall and End Wall — CONC WW

MINOR:

- Head and End Wall — CONC HW
- Pipe Culvert
- Footbridge
- Drainage Box: Catch Basin, DI or JB — CB
- Paved Ditch Gutter
- Storm Sewer Manhole — S
- Storm Sewer — S

UTILITIES:

POWER:

- Existing Power Pole
- Proposed Power Pole
- Existing Joint Use Pole
- Proposed Joint Use Pole
- Power Manhole — P
- Power Line Tower
- Power Transformer
- U/G Power Cable Hand Hole
- H-Frame Pole
- Recorded U/G Power Line — P
- Designated U/G Power Line (S.U.E.*) — P

TELEPHONE:

- Existing Telephone Pole
- Proposed Telephone Pole
- Telephone Manhole — T
- Telephone Booth
- Telephone Pedestal
- Telephone Cell Tower
- U/G Telephone Cable Hand Hole — HH
- Recorded U/G Telephone Cable — T
- Designated U/G Telephone Cable (S.U.E.*) — T
- Recorded U/G Telephone Conduit — TC
- Designated U/G Telephone Conduit (S.U.E.*) — TC
- Recorded U/G Fiber Optics Cable — T FO
- Designated U/G Fiber Optics Cable (S.U.E.*) — T FO

WATER:

- Water Manhole — W
- Water Meter
- Water Valve
- Water Hydrant
- Recorded U/G Water Line — W
- Designated U/G Water Line (S.U.E.*) — W
- Above Ground Water Line — A/G Water

TV:

- TV Satellite Dish
- TV Pedestal — C
- TV Tower
- U/G TV Cable Hand Hole — HH
- Recorded U/G TV Cable — TV
- Designated U/G TV Cable (S.U.E.*) — TV
- Recorded U/G Fiber Optic Cable — TV FO
- Designated U/G Fiber Optic Cable (S.U.E.*) — TV FO

GAS:

- Gas Valve
- Gas Meter
- Recorded U/G Gas Line — G
- Designated U/G Gas Line (S.U.E.*) — G
- Above Ground Gas Line — A/G Gas

SANITARY SEWER:

- Sanitary Sewer Manhole
- Sanitary Sewer Cleanout
- U/G Sanitary Sewer Line — SS
- Above Ground Sanitary Sewer — A/G Sanitary Sewer
- Recorded SS Forced Main Line — FSS
- Designated SS Forced Main Line (S.U.E.*) — FSS

MISCELLANEOUS:

- Utility Pole
- Utility Pole with Base
- Utility Located Object
- Utility Traffic Signal Box — S
- Utility Unknown U/G Line — PUTL
- U/G Tank; Water, Gas, Oil
- Underground Storage Tank, Approx. Loc. — UST
- A/G Tank; Water, Gas, Oil
- Geoenvironmental Boring
- U/G Test Hole (S.U.E.*)
- Abandoned According to Utility Records — AATUR
- End of Information — E.O.I.

PROJECT NO.	SHEET NO.	TOTAL NO.
43574.3.1 (SS-4908AI)	3	
45338.3.FS10 (W-5208J)		

SUMMARY OF QUANTITIES

PROJECT NO	COUNTY	MAP NO	ROUTE	DESCRIPTION	TYP NO	LANES	LANE TYPE	LENGTH MI	WIDTH FT	GRADING LS	FOUNDATION CONDITIONING MATERIAL, MINOR STRUCTURES TON	FOUNDATION CONDITIONING GEOTEXTILE SY	24" RC PIPE CULVERT, CLASS III LF	15" RC PIPE CULVERT, CLASS IV LF	18" RC PIPE CULVERT, CLASS IV LF	PIPE REMOVAL LF	INCIDENTAL STONE BASE TON	0" TO 1.5" MILLING SY	BASE COURSE, B25.0B TON	INTERMEDIATE COURSE, I19.0B TON	SURFACE COURSE, S9.5B TON	ASPHALT BINDER FOR PLANT MIX TON	AC PLANT MIX (REPAIR) TON	PIPE COLLAR CY	MASONRY DRAINAGE STRUCTURE EA	FRAME WITH TWO GRATES, STD 840.16 EA
43574.3.1 (SS-4908AI)	Hoke	1	US 401	DIRECTIONAL LEFTOVER AT SR 1304 (HOBSON RD) WITH BULBOUT	1-12	2	MD	0.37	24	0.32	62	195		224	354	23	50	560	1,170	600	710	123	25		4	
TOTAL FOR MAP NO. 1								**0.37**		**0.32**	**62**	**195**		**224**	**354**	**23**	**50**	**560**	**1,170**	**600**	**710**	**123**	**25**		**4**	
TOTAL FOR PROJ NO. 43574.3.1 (SS-4908AI)								**0.37**		**0.32**	**62**	**195**		**224**	**354**	**23**	**50**	**560**	**1,170**	**600**	**710**	**123**	**25**		**4**	
45338.3.10 (W-5208J)	Hoke	2	US 401	INTERSECTIONS IMPROVEMENTS AT SR 1305 (WAYSIDE RD) AND SR 1418 (LINDSAY RD)	1-26	2	MD	0.93	24	0.68	140	435	4	750	542	90	50	900	2,835	1,450	1,745	299	80	0.950	6	2
TOTAL FOR MAP NO. 2								**0.93**		**0.68**	**140**	**435**	**4**	**750**	**542**	**90**	**50**	**900**	**2,835**	**1,450**	**1,745**	**299**	**80**	**0.950**	**6**	**2**
TOTAL FOR PROJ NO. 45338.3.10 (W-5208J)								**0.93**		**0.68**	**140**	**435**	**4**	**750**	**542**	**90**	**50**	**900**	**2,835**	**1,450**	**1,745**	**299**	**80**	**0.950**	**6**	**2**
GRAND TOTAL								**1.3**		**1.00**	**202**	**630**	**4**	**974**	**896**	**113**	**100**	**1,460**	**4,005**	**2,050**	**2,455**	**422**	**105**	**0.950**	**10**	**2**

PROJECT NO	COUNTY	MAP NO	ROUTE	DESCRIPTION	TYP NO	LANES	LANE TYPE	LENGTH MI	WIDTH FT	FRAME WITH TWO GRATES, STD 840.22 EA	FRAME WITH MH COVER, STD 840.54 EA	CONCRETE TRANSITIONAL SECTION FOR DROP INLET EA	5" MONOLITHIC CONCRETE ISLANDS (SURFACE MOUNTED) SY	ADJUST DROP INLET EA	ADJUST MANHOLES EA	ADJUST METER OR VALVE BOX EA	RIP RAP, CLASS B TON	GEOTEXTILE FOR DRAINAGE SY	PORTABLE LIGHTING LS	8" WATER LINE LF	TEMPORARY SILT FENCE LF	EROSION CONTROL STONE, CLASS A TON	EROSION CONTROL STONE, CLASS B TON	SEDIMENT CONTROL STONE TON	TEMPORARY MULCHING ACR	MATTING (EROSION CONTROL) SY
43574.3.1 (SS-4908AI)	Hoke	1	US 401	DIRECTIONAL LEFTOVER AT SR 1304 (HOBSON RD) WITH BULBOUT	1-12	2	MD	0.37	24	3	1		470		1		5	17				15	35	50	1.25	1,100
TOTAL FOR MAP NO. 1								**0.37**		**3**	**1**		**470**		**1**		**5**	**17**				**15**	**35**	**50**	**1.25**	**1,100**
TOTAL FOR PROJ NO. 43574.3.1 (SS-4908AI)								**0.37**		**3**	**1**		**470**		**1**		**5**	**17**				**15**	**35**	**50**	**1.25**	**1,100**
45338.3.10 (W-5208J)	Hoke	2	US 401	INTERSECTIONS IMPROVEMENTS AT SR 1305 (WAYSIDE RD) AND SR 1418 (LINDSAY RD)	1-26	2	MD	0.93	24	4		2	2,945	5	1	1	14	45	1	60	825	20	10	75	2.82	4,150
TOTAL FOR MAP NO. 2								**0.93**		**4**		**2**	**2,945**	**5**	**1**	**1**	**14**	**45**	**1**	**60**	**825**	**20**	**10**	**75**	**2.82**	**4,150**
TOTAL FOR PROJ NO. 45338.3.10 (W-5208J)								**0.93**		**4**		**2**	**2,945**	**5**	**1**	**1**	**14**	**45**	**1**	**60**	**825**	**20**	**10**	**75**	**2.82**	**4,150**
GRAND TOTAL								**1.3**		**7**	**1**	**2**	**3,415**	**5**	**2**	**1**	**19**	**62**	**1**	**60**	**825**	**35**	**45**	**125**	**4.07**	**5,250**

PROJECT NO	COUNTY	MAP NO	ROUTE	DESCRIPTION	TYP NO	LANES	LANE TYPE	LENGTH MI	WIDTH FT	PERMANENT SOIL REINFORCEMENT MAT SY	1/4" HARDWARE CLOTH LF	WATTLE LF	POLYACRYLAMIDE (PAM) LB	COIR FIBER BAFFLES LF	SEED & MULCHING AC	SEED FOR REPAIR SEEDING LB	FERTILIZER FOR REPAIR SEEDING TON	SIGNAL CABLE LF	VEHICLE SIGNAL HEAD (12", 3 SECTION) EA	BORE & JACK (1 CONDUIT, 2") LF	UNPAVED TRENCHING (1 CONDUIT, 2") LF	JUNCTION BOX (STANDARD SIZE) EA	INDUCTIVE LOOP SAWCUT LF	LEAD-IN CABLE (14-2 PAIR) LF	SIGN FOR SIGNALS EA
43574.3.1 (SS-4908AI)	Hoke	1	US 401	DIRECTIONAL LEFTOVER AT SR 1304 (HOBSON RD) WITH BULBOUT	1-12	2	MD	0.37	24	435	80	705	5	45	1.25	50	0.25								
TOTAL FOR MAP NO. 1								**0.37**		**435**	**80**	**705**	**5**	**45**	**1.25**	**50**	**0.25**								
TOTAL FOR PROJ NO. 43574.3.1 (SS-4908AI)								**0.37**		**435**	**80**	**705**	**5**	**45**	**1.25**	**50**	**0.25**								
45338.3.10 (W-5208J)	Hoke	2	US 401	INTERSECTIONS IMPROVEMENTS AT SR 1305 (WAYSIDE RD) AND SR 1418 (LINDSAY RD)	1-26	2	MD	0.93	24		230	705	15	20	2.82	50	0.25	300	1	75	1,400	7	850	4,100	13
TOTAL FOR MAP NO. 2								**0.93**			**230**	**705**	**15**	**20**	**2.82**	**50**	**0.25**	**300**	**1**	**75**	**1,400**	**7**	**850**	**4,100**	**13**
TOTAL FOR PROJ NO. 45338.3.10 (W-5208J)								**0.93**			**230**	**705**	**15**	**20**	**2.82**	**50**	**0.25**	**300**	**1**	**75**	**1,400**	**7**	**850**	**4,100**	**13**
GRAND TOTAL								**1.3**		**435**	**310**	**1,410**	**20**	**65**	**4.07**	**100**	**0.50**	**300**	**1**	**75**	**1,400**	**7**	**850**	**4,100**	**13**

PROJECT NO.	SHEET NO.	TOTAL NO.
43574.3.1 (SS-4908AI)	3-A	
45338.3.FS10 (W-5208J)		

THERMOPLASTIC AND PAINT QUANTITIES

PROJECT NO	COUNTY	MAP NO	ROUTE	DESCRIPTION	TYP NO	LANES	LANE TYPE	LENGTH	WIDTH	4457000000-N TEMPORARY TRAFFIC CONTROL LS	4685000000-E 4" X 90 M WHITE THERMO LF	4685000000-E 4" X 90 M YELLOW THERMO LF	4686000000-E 4" X 120 M WHITE THERMO LF	4686000000-E 4" X 120 M YELLOW THERMO LF	4695000000-E 8" X 90 M WHITE THERMO LF	4695000000-E 8" X 90 M YELLOW THERMO LF	4710000000-E 24" X 120 M WHITE THERMO LF	4725000000-E THERMO LT ARROW 90 M EA	4725000000-E THERMO U-TURN ARROW 90 M EA	4725000000-E THERMO LT STR RT ARROW 90 M EA	4725000000-E THERMO STR ARROW 90 M EA	4725000000-E THERMO RT ARROW 90 M EA	4850000000-E 4" LINE REMOVAL LF	4870000000-E 24" LINE REMOVAL LF	4875000000-N REMOVAL OF PAVEMENT MARKING SYMBOLS & CHARACTERS EA	4900000000-N CRYSTAL & RED MARKERS EA	4900000000-N YELLOW & YELLOW MARKERS EA
43574.3.1 (SS-4908AI)	Hoke	1	US 401	DIRECTIONAL LEFTOVER AT SR 1304 (HOBSON RD) WITH BULBOUT	1-12	2	MD	0.37	24	0.27	950	2,815	210	25	1,480	125		3	3							70	
TOTAL FOR MAP NO. 1								**0.37**		**0.27**	**950**	**2,815**	**210**	**25**	**1,480**	**125**		**3**	**3**							**70**	
TOTAL FOR PROJ NO. 43574.3.1 (SS-4908AI)								**0.37**		**0.27**	**950**	**2,815**	**210**	**25**	**1,480**	**125**		**3**	**3**							**70**	
											3,765		**235**		**1,605**			**6**								**70**	
45338.3.10 (W-5208J)	Hoke	2	US 401	INTERSECTIONS IMPROVEMENTS AT SR 1305 (WAYSIDE RD) AND SR 1418 (LINDSAY RD)	1-26	2	MD	0.93	24	0.73	4,595	7,875	1,010	35	2,045	100	220	6	9	1	8	4	105	200	1	124	42
TOTAL FOR MAP NO. 2								**0.93**		**0.73**	**4,595**	**7,875**	**1,010**	**35**	**2,045**	**100**	**220**	**6**	**9**	**1**	**8**	**4**	**105**	**200**	**1**	**124**	**42**
TOTAL FOR PROJ NO. 45338.3.10 (W-5208J)								**0.93**		**0.73**	**4,595**	**7,875**	**1,010**	**35**	**2,045**	**100**	**220**	**6**	**9**	**1**	**8**	**4**	**105**	**200**	**1**	**124**	**42**
											12,470		**1,045**		**2,145**			**28**								**166**	
GRAND TOTAL								**1.3**		**1.00**	**5,545**	**10,690**	**1,220**	**60**	**3,525**	**225**	**220**	**9**	**12**	**1**	**8**	**4**	**105**	**200**	**1**	**194**	**42**
											16,235		**1,280**		**3,750**			**34**								**236**	

09/08/99

TIP PROJECT: SS-4908AI

CONTRACT:

See Sheet 1-A For Index of Sheets

STATE OF NORTH CAROLINA
DIVISION OF HIGHWAYS

HOKE COUNTY

STATE	STATE PROJECT REFERENCE NO.	SHEET NO.	TOTAL SHEETS
N.C.	SS-4908AI	1	

STATE PROJ. NO.	F. A. PROJ. NO.	DESCRIPTION
43574.1.1		PE
43574.2.1		R/W
43574.3.1		CONST.

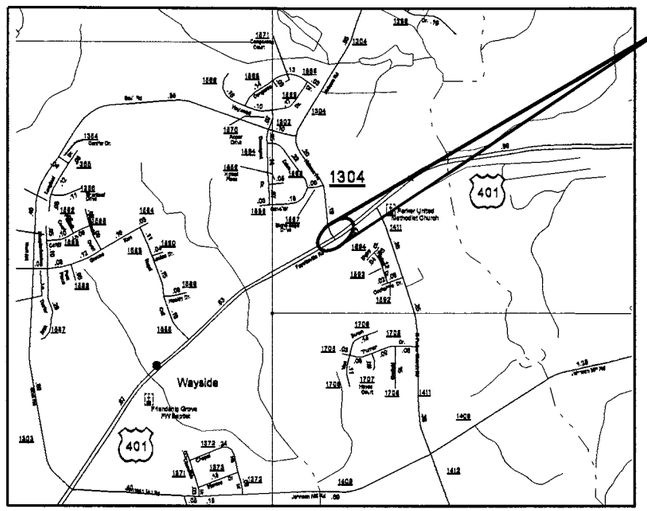

PROJECT LOCATION

LOCATION: US 401 AT SR 1304 (HOBSON RD.)

TYPE OF WORK: GRADING, PAVING, DRAINAGE, CONCRETE ISLANDS, AND THEMOPLASTIC MARKINGS & MARKERS

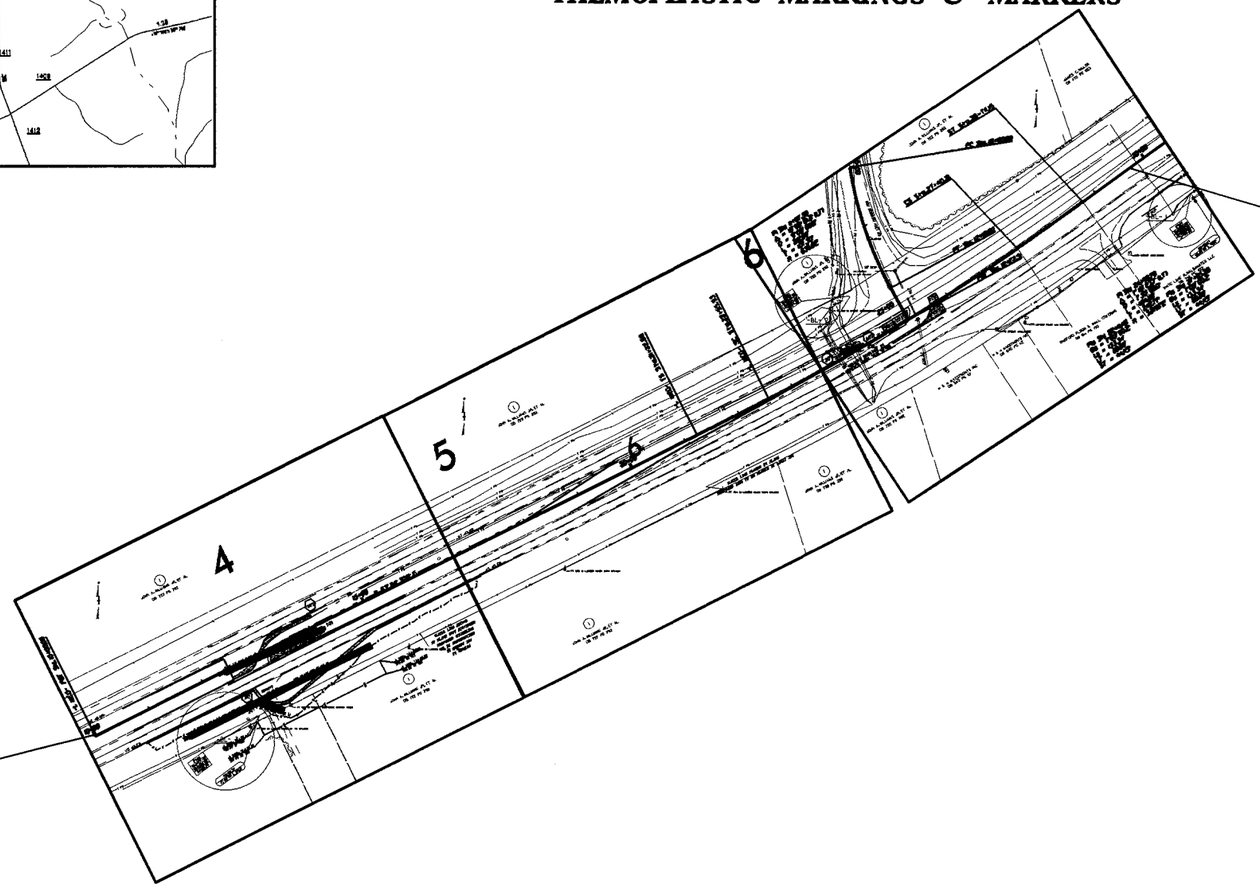

-L MED- STA 29+66
END PROJECT SS-4908AI

-L MED- STA. 10+00
BEGIN PROJECT SS-4908AI

GRAPHIC SCALES

0 25 50
PLANS

DESIGN DATA

ADT 2012 = 22,000

D = 50 %
T = 6 % *
V = 45 MPH
* TTST = 3 DUAL 3

Prepared in the Office of:
DIVISION OF HIGHWAYS
DIVISION 8 DESIGN & CONSTRUCT UNIT
902 N. SANDHILLS BLVD.
ABERDEEN NC 28315
PLANS PREPARED BY: MRT

PROJECT LENGTH
ROADWAY: 0.37 MILES
STRUCTURE: ____ MILES
TOTAL: 0.37 MILES

DIVISION OF HIGHWAYS

2012 STANDARD SPECIFICATIONS

RIGHT OF WAY DATE:

LETTING DATE:

DIVISION DESIGN & CONSTRUCT ENGINEER

5-30-14

NORTH CAROLINA PROFESSIONAL SEAL 26930 ENGINEER GREG S. DAVIS

29-MAY-2014 11:32
C:\div8_projects\rdy\HOKE\US401@sr_1304(hobson_rd)\psh\us401@SR-1304(hobson_rd)_tsh.dgn
gsdavis AT D8CAD-27040

PROJECT REFERENCE NO.	SHEET NO.
SS-4908AI	2
R/W SHEET NO.	

5-30-14

NORTH CAROLINA PROFESSIONAL SEAL 26930 ENGINEER GREG S. DAVIS

DIVISION DESIGN / CONSTRUCT ENGINEER

TYPICAL SECTION NO. 1

-L MED - STA. 10+00 TO 12+49.18

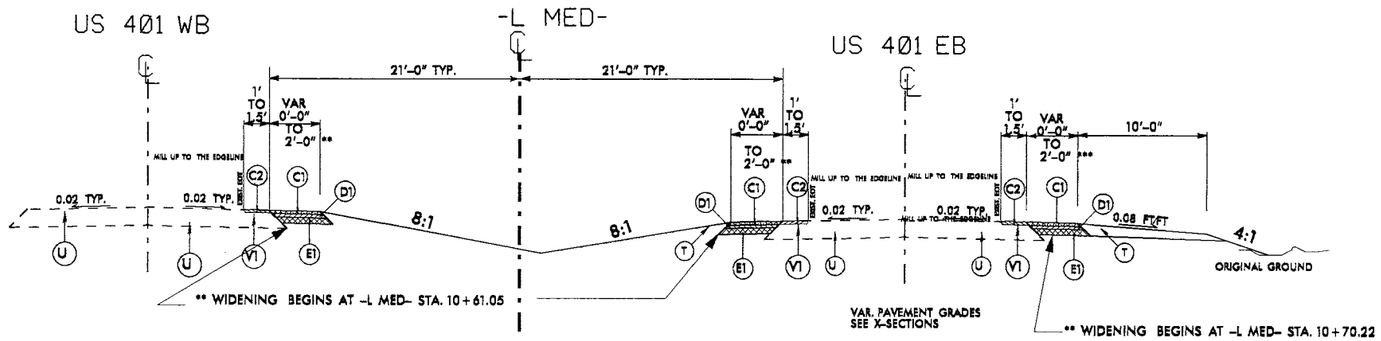

TYPICAL SECTION NO. 2

-L MED- STA. 12+49.18 TO 13+06.07

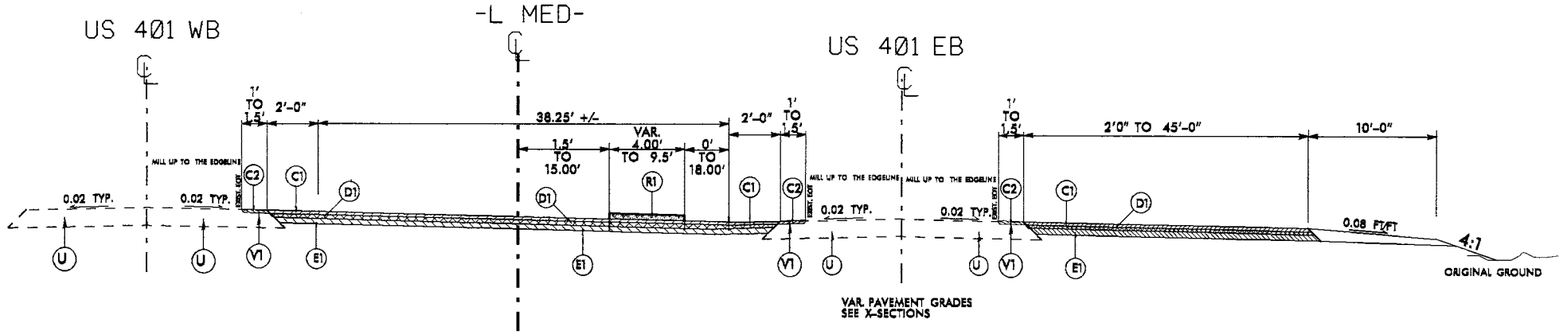

PAVEMENT SCHEDULE	
C1	PROP. APPROX. 3" ASPHALT CONCRETE SURFACE COURSE, TYPE S9.5B, AT AN AVERAGE RATE OF 168 LBS. PER SQ. YD. PER 1½" DEPTH. TO BE PLACED IN TWO LAYERS.
C2	PROP. APPROX. 1.5" ASPHALT CONCRETE SURFACE COURSE, TYPE S9.5B, AT AN AVERAGE RATE OF 168 LBS. PER SQ. YD.
D1	PROP. APPROX. 4" ASPHALT CONCRETE INTERMEDIATE COURSE, TYPE I19.3, AT AN AVERAGE RATE OF 456 LBS. PER SQ. YD.
E1	PROP. APPROX. 5.5" ASPHALT CONCRETE BASE COURSE, TYPE B25.B, AT AN AVERAGE RATE OF 827 LBS. PER SQ. YD.
R1	5" MONOLITHIC CONCRETE ISLAND (SURFACE MOUNTED).
T	EARTH MATERIAL.
U	EXISTING PAVEMENT.
V1	0" TO 1.5" MILLING

NOTE: PAVEMENT EDGE SLOPES ARE 1:1 UNLESS SHOWN OTHERWISE.

TYPICAL SECTION NO. 3

-L MED- STA. 13+06.07 TO 14+10.93

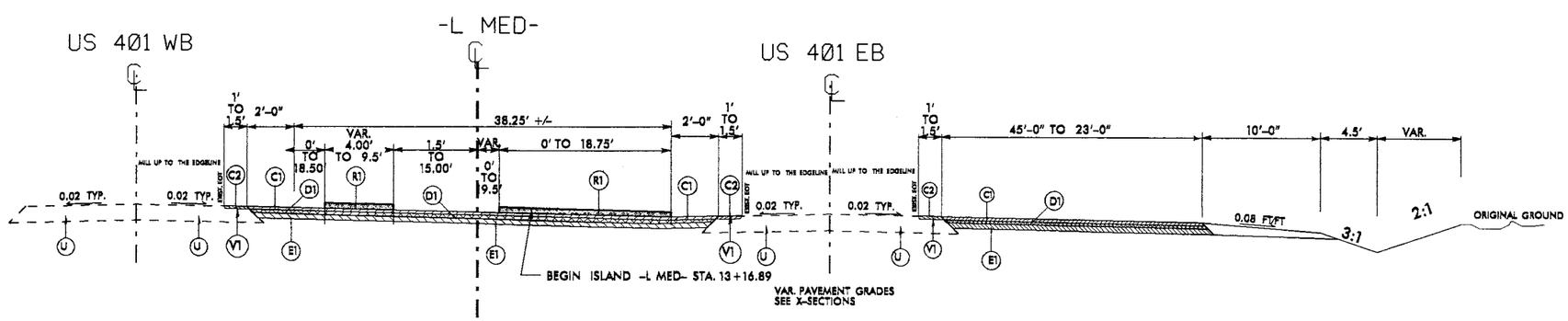

8/17/99

29-MAY-2014 10:15
C:\dv8_projects\rdy\HOKE\US401@sr_1304(hobson_rd)\psh\us401@SR-1304(hobson_rd)_typ.dgn

PROJECT REFERENCE NO.	SHEET NO.
SS-4908AI	2-A
RW SHEET NO.	

5-30-14

DIVISION DESIGN / CONSTRUCT ENGINEER

TYPICAL SECTION NO. 4
-L MED- STA. 14+10.93 TO 17+86.00

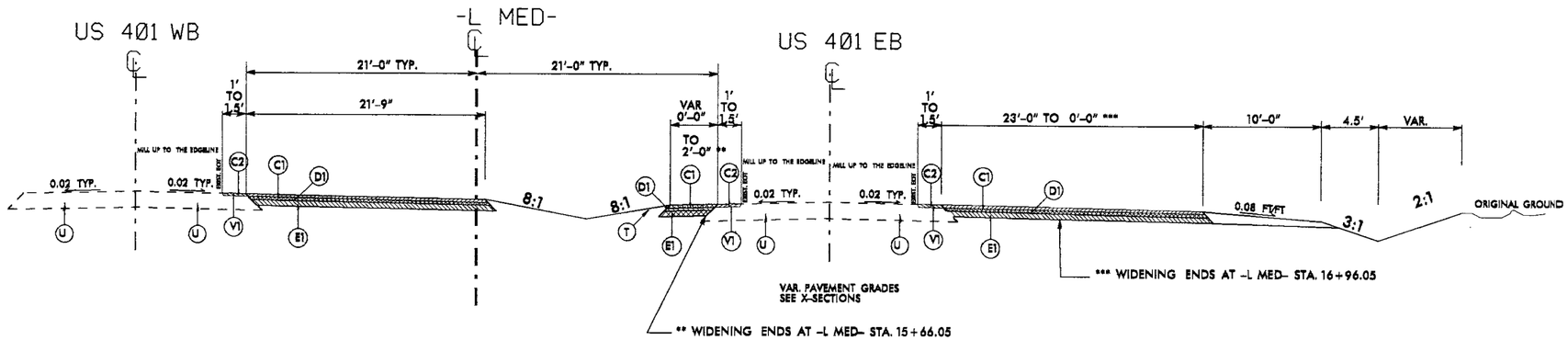

TYPICAL SECTION NO. 5
-L MED- STA. 17+86.00 TO 18+73.77

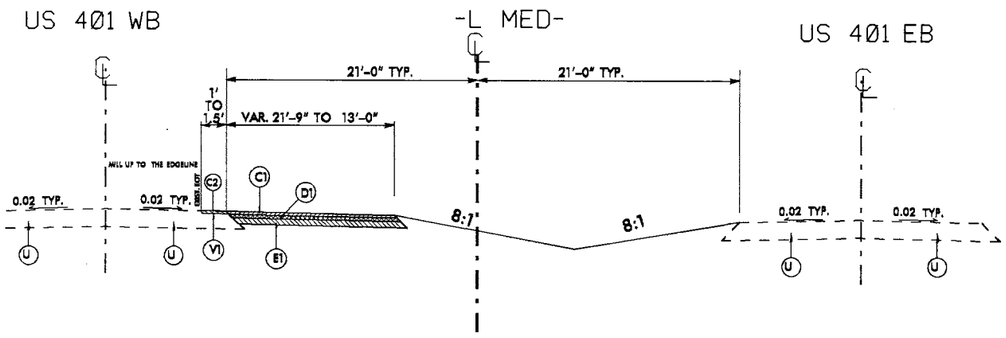

TYPICAL SECTION NO. 6
-L MED- STA. 18+73.77 TO 19+86.00

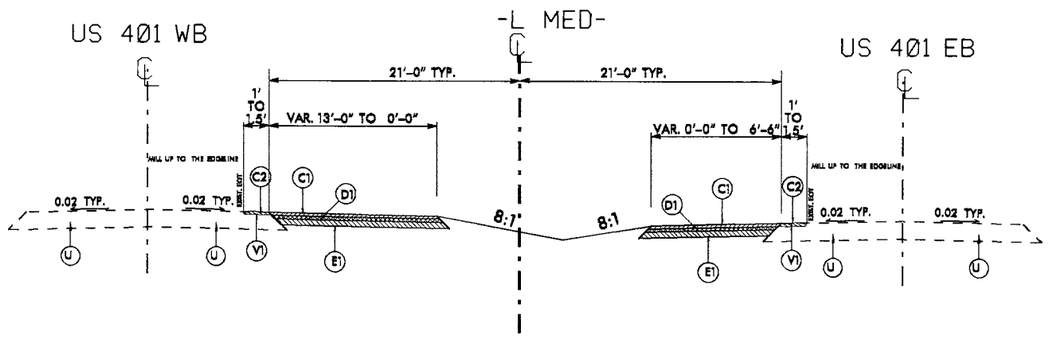

PAVEMENT SCHEDULE

C1	PROP. APPROX. 3" ASPHALT CONCRETE SURFACE COURSE, TYPE S9.5B, AT AN AVERAGE RATE OF 166 LBS. PER SQ. YD. PER 1½" DEPTH. TO BE PLACED IN TWO LAYERS.
C2	PROP. APPROX. 1.5" ASPHALT CONCRETE SURFACE COURSE, TYPE S9.5B, AT AN AVERAGE RATE OF 168 LBS. PER SQ. YD.
D1	PROP. APPROX. 4" ASPHALT CONCRETE INTERMEDIATE COURSE, TYPE I19.B, AT AN AVERAGE RATE OF 456 LBS. PER SQ. YD.
E1	PROP. APPROX. 5.5" ASPHALT CONCRETE BASE COURSE, TYPE B25.B, AT AN AVERAGE RATE OF 627 LBS. PER SQ. YD.
R1	5" MONOLITHIC CONCRETE ISLAND (SURFACE MOUNTED).
T	EARTH MATERIAL.
U	EXISTING PAVEMENT.
V1	0" TO 1.5" MILLING

NOTE: PAVEMENT EDGE SLOPES ARE 1:1 UNLESS SHOWN OTHERWISE.

REVISIONS 8/17/99

29-MAY-2014 10:15
C:\Users\ghobson\Desktop\HOKE\US401ss-1304\hobson_rdl\psh\us401ss-1304hobson_rdl_typ.dgn
$$USER: ghobson
$$DATE: 05/29/2014

PROJECT REFERENCE NO.	SHEET NO.
SS-4908AI	2-B
RW SHEET NO.	

5-30-14

DIVISION DESIGN / CONSTRUCT ENGINEER

8/17/95

REVISIONS

TYPICAL SECTION NO. 7
-L MED- STA. 19+86.00 TO 20+60.00

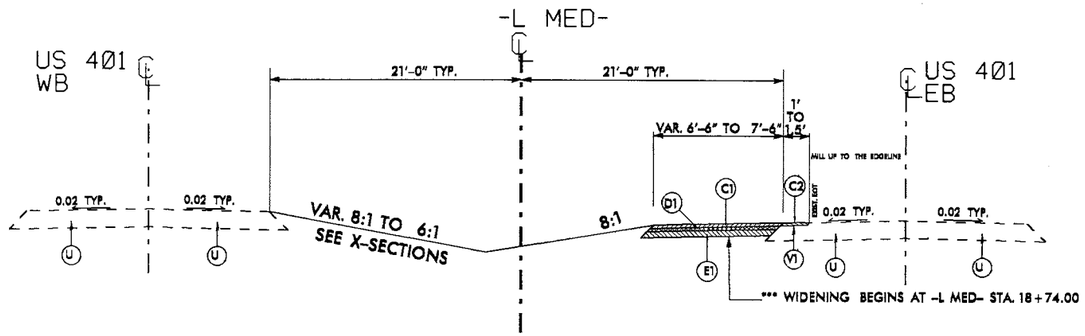

TYPICAL SECTION NO. 8
-L MED- STA. 20+60.00 TO 24+80.00

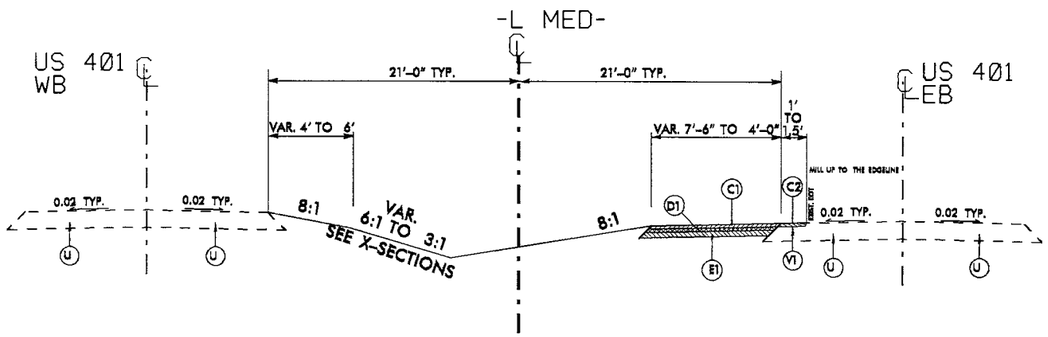

TYPICAL SECTION NO. 9
-L MED- STA. 24+69.00 TO 24+80 LT
-L MED- STA. 24+80.00 TO 25+30.00

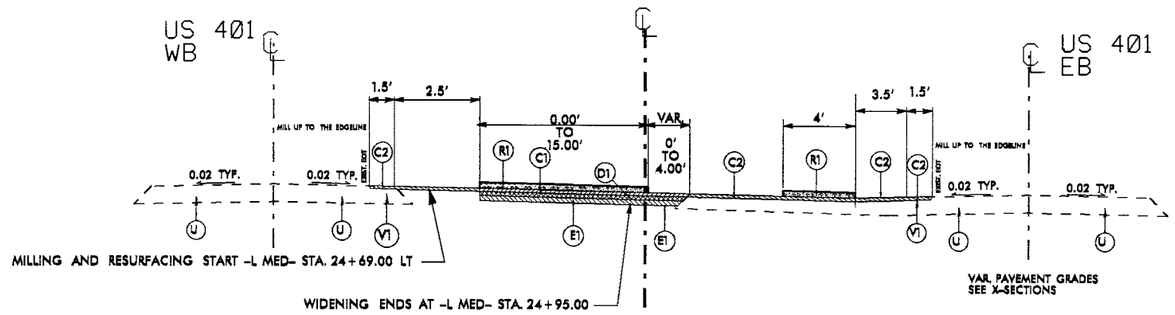

PAVEMENT SCHEDULE	
C1	PROP. APPROX. 3" ASPHALT CONCRETE SURFACE COURSE, TYPE S9.5B, AT AN AVERAGE RATE OF 168 LBS. PER SQ. YD. PER 1½" DEPTH. TO BE PLACED IN TWO LAYERS.
C2	PROP. APPROX. 1.5" ASPHALT CONCRETE SURFACE COURSE, TYPE S9.5B, AT AN AVERAGE RATE OF 168 LBS. PER SQ. YD.
D1	PROP. APPROX. 4" ASPHALT CONCRETE INTERMEDIATE COURSE, TYPE I19.B, AT AN AVERAGE RATE OF 456 LBS. PER SQ. YD.
E1	PROP. APPROX. 5.5" ASPHALT CONCRETE BASE COURSE, TYPE B25.B, AT AN AVERAGE RATE OF 627 LBS. PER SQ. YD.
R1	5" MONOLITHIC CONCRETE ISLAND (SURFACE MOUNTED).
T	EARTH MATERIAL.
U	EXISTING PAVEMENT.
V1	0" TO 1.5" MILLING

NOTE: PAVEMENT EDGE SLOPES ARE 1:1 UNLESS SHOWN OTHERWISE.

23-MAY-2014 10:5
C:\Drive_pr\pw_work\dgn\HOKE\US401sr-1304\hobson_rdl\psh\us401sSR-1304hobson_rdl_typ.dgn
default
$$USER
$$DATE
$$TIME

PROJECT REFERENCE NO.	SHEET NO.
SS-4908AI	2-C
RW SHEET NO.	

S-30-14

NORTH CAROLINA PROFESSIONAL SEAL 36930 ENGINEER GREG A. DAVIS

DIVISION DESIGN / CONSTRUCT ENGINEER

TYPICAL SECTION NO. 10

-L MED- STA. 25+30.00 TO 25+60.00

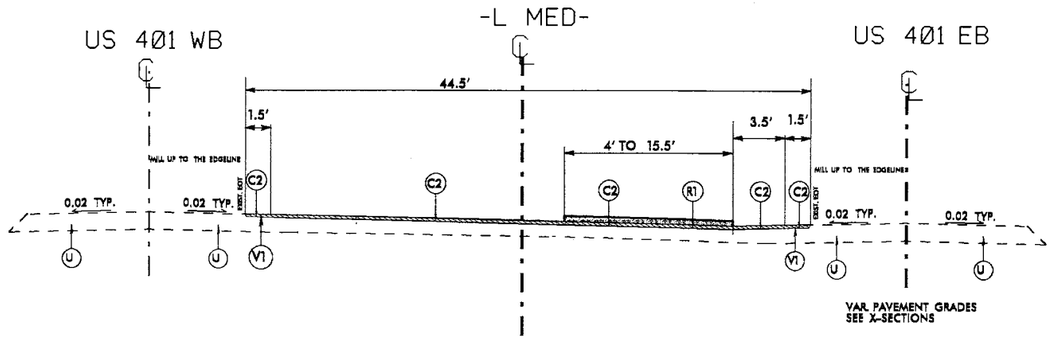

TYPICAL SECTION NO. 11

-L MED- STA. 25+60.00 TO 25+85.20

-L MED- STA. 25+85.20 TO 26+37.00 RT

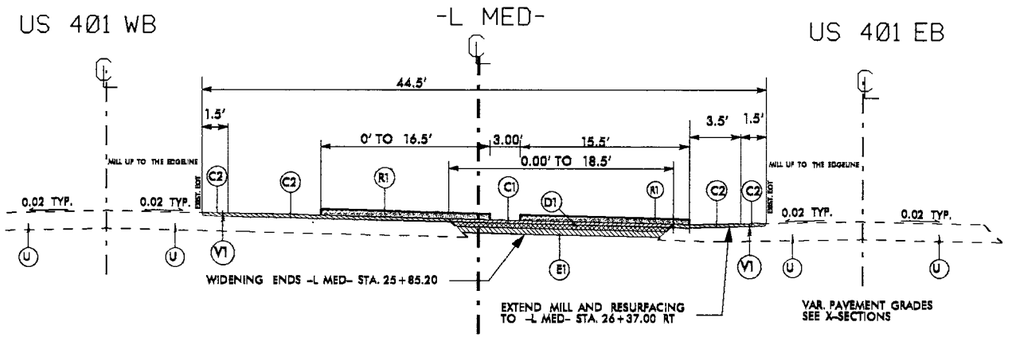

TYPICAL SECTION NO. 12

-L MED- STA. 25+85.20 TO 29+66.00

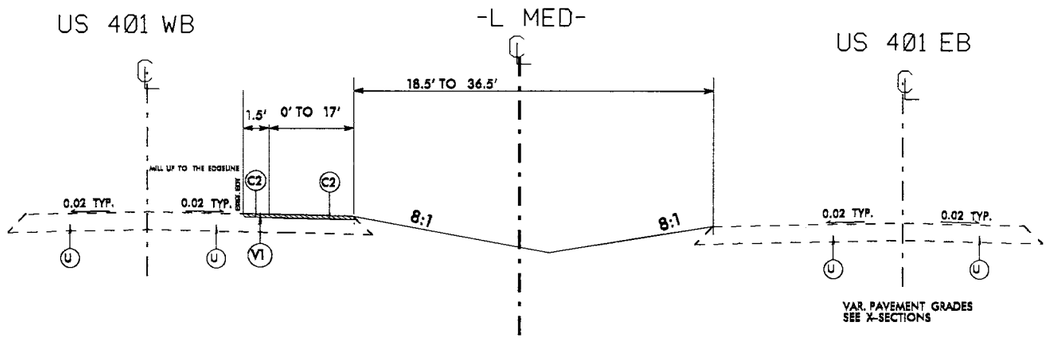

PAVEMENT SCHEDULE

C1	PROP. APPROX. 3" ASPHALT CONCRETE SURFACE COURSE, TYPE S9.5B, AT AN AVERAGE RATE OF 168 LBS. PER SQ. YD. PER 1½" DEPTH. TO BE PLACED IN TWO LAYERS.
C2	PROP. APPROX. 1.5" ASPHALT CONCRETE SURFACE COURSE, TYPE S9.5B, AT AN AVERAGE RATE OF 168 LBS. PER SQ. YD.
D1	PROP. APPROX. 4" ASPHALT CONCRETE INTERMEDIATE COURSE, TYPE I19.0B, AT AN AVERAGE RATE OF 456 LBS. PER SQ. YD.
E1	PROP. APPROX. 5.5" ASPHALT CONCRETE BASE COURSE, TYPE B25.0B, AT AN AVERAGE RATE OF 627 LBS. PER SQ. YD.
R1	5" MONOLITHIC CONCRETE ISLAND (SURFACE MOUNTED).
T	EARTH MATERIAL.
U	EXISTING PAVEMENT.
V1	0" TO 1.5" MILLING

NOTE: PAVEMENT EDGE SLOPES ARE 1:1 UNLESS SHOWN OTHERWISE.

REVISIONS

8/17/99

29-MAY-2014 10:05
C:\dgn\8.pp\acts\rdu\HOKE\US401@sr_1304(hobson_rdl\psh\us401@sr_1304(hobson_rdl_typ.dgn
ardavis at DOT-27640

COMPUTED BY: DDC DATE: 5/2/2014
CHECKED BY: GSD DATE: 5/6/2014

PROJECT NO.	SHEET NO.
SS-4908AI	3

D8CAD221432

STATE OF NORTH CAROLINA
DIVISION OF HIGHWAYS

SUMMARY OF EARTHWORK

Station	Station	Uncl. Excav.	Embank. +%	Borrow	Waste
-L Med- 10+00	-L Med- 24+84.82	908	1114	206	
-L Med- 25+65.47	-L Med- 27+00	10	30	20	
SUBTOTALS:		918	1144	226	0
Waste to Replace Borrow				0	0
Subtotal				226	
EST. 5% TO REPLACE TOPSOIL ON BORROW PITS				11	
PROJECT TOTALS:		918	0	237	
GRAND TOTALS:		918		237	
SAY:		920		240	

NOTE:
Shoulder Material included in Embankment quantities listed

Approximate quantities only. Unclassified excavation, borrow excavation, fine grading, clearing and grubbing, silt excavation, and removal of existing pavemen t will be paid for at the lump sum price for "Grading".

RD10501C

COMPUTED BY: DDC DATE: 4/25/2014

CHECKED BY: GSD DATE: 5/6/2014

PROJECT NO.	SHEET NO.
SS-4908AI	3-A

STATE OF NORTH CAROLINA
DIVISION OF HIGHWAYS

LIST OF PIPES, ENDWALLS, ETC. (FOR PIPES 48" & UNDER)

STATION	LOCATION (LT, RT, OR CL)*	STRUCTURE NO. FROM	STRUCTURE NO. TO	TOP ELEVATION	INVERT ELEVATION	INVERT ELEVATION	SLOPE CRITICAL	CLASS IV R.C. PIPE (UNLESS NOTED OTHERWISE) SIZE							BITUMINOUS COATED C.S. PIPE TYPE B (UNLESS NOTED OTHERWISE) SIZE								15" SIDE DRAIN PIPE	18" SIDE DRAIN PIPE	24" SIDE DRAIN PIPE	ENDWALLS STD. 838.01 OR STD. 838.11 (UNLESS NOTED OTHERWISE) CU. YARDS		QUANITIES FOR DRAINAGE STRUCTURES	"TOTAL L.F. FOR PAY QUANTITY SHALL BE COL. 'A' + (1.3 X COL. 'B') LIN. FT.		C.B. STD. 840.01 OR STD. 840.02	FRAME, GRATES, AND HOOD STANDARD 840.03 TYPE OF GRATE		
								12"	15"	18"	24"	30"	36"	42"	12"	15"	18"	24"	30"	36"	42"	48"				R.C.P.	C.S.P.	PER EACH (0' THRU 5.0')	A 5.0' THRU 10.0'	B 10.0' AND ABOVE		E	F	G
THICKNESS OR GAUGE															.064	.064	.064	.064	.079	.079	.109	.109											
-L MED - 11+40	RT	OUT	401							130																						
-L MED - 13+01	RT	IN	401						44																							
-L MED - 12+70	RT	401	IN							192																1						
-L MED - 12+40	CL	OUT	402						180																							
-L MED - 14+20	CL	402																								1						
-L MED - 24+00	CL	601	602							32																1						
-L MED - 24+35	CL	602																								1						
SHEET TOTALS									224	354																4						

D.I. STD. 840.14 OR STD. 840.15	D.I. FRAME AND 2 GRATES STD. 840.16	M.D.I. TYPE "A" STD. 840.17 OR 840.26	M.D.I. TYPE "B" STD. 840.18 OR 840.27	M.D.I. TYPE "D" STD. 840.19 OR 840.28	M.D.I. FRAME WITH GRATE STD. 840.20	M.D.I. FRAME WITH TWO GRATES STD. 840.22	M.D.I. (N.S.) FRAME WITH GRATE STD. 840.24	M.D.I. (N.S.) FRAME WITH TWO GRATES STD. 840.24	J.B. STD. 840.31 OR 840.32	T.B.J.B. STD. 840.46	MANHOLE STD. 840.51	M.H. STD. 840.51 OR 840.53	M.H. FRAME AND COVER STD. 840.54	CORR. STEEL ELBOWS NO. & SIZE	CONC. COLLARS CL. "B" C.Y. STD. 840.72	CONC. & BRICK PIPE PLUG, C.Y. STD. 840.71	PIPE REMOVAL LIN. FT.	REMARKS
1						1											23	
1						1												
1						1												
1									1			1						TRAFFIC BEARING JB, REMOVE EX. DI
3	0				3		1	1		0							23	

ABBREVIATIONS

C.B.	CATCH BASIN
N.D.I.	NARROW DROP INLET
D.I.	DROP INLET
M.D.I.	MEDIAN DROP INLET
M.D.I.(N.S.)	MEDIAN DROP INLET (NARROW SLOT)
J.B.	JUNCTION BOX
M.H.	MANHOLE
T.B.D.I.	TRAFFIC BEARING DROP INLET
T.B.J.B.	TRAFFIC BEARING JUNCTION BOX

PROJECT REFERENCE NO.	SHEET NO.
SS-4908AI	4
R/W SHEET NO.	

5-30-14

NORTH CAROLINA PROFESSIONAL SEAL 26930 ENGINEER GREG S. DAVIS

DIVISION DESIGN / CONSTRUCT ENGINEER

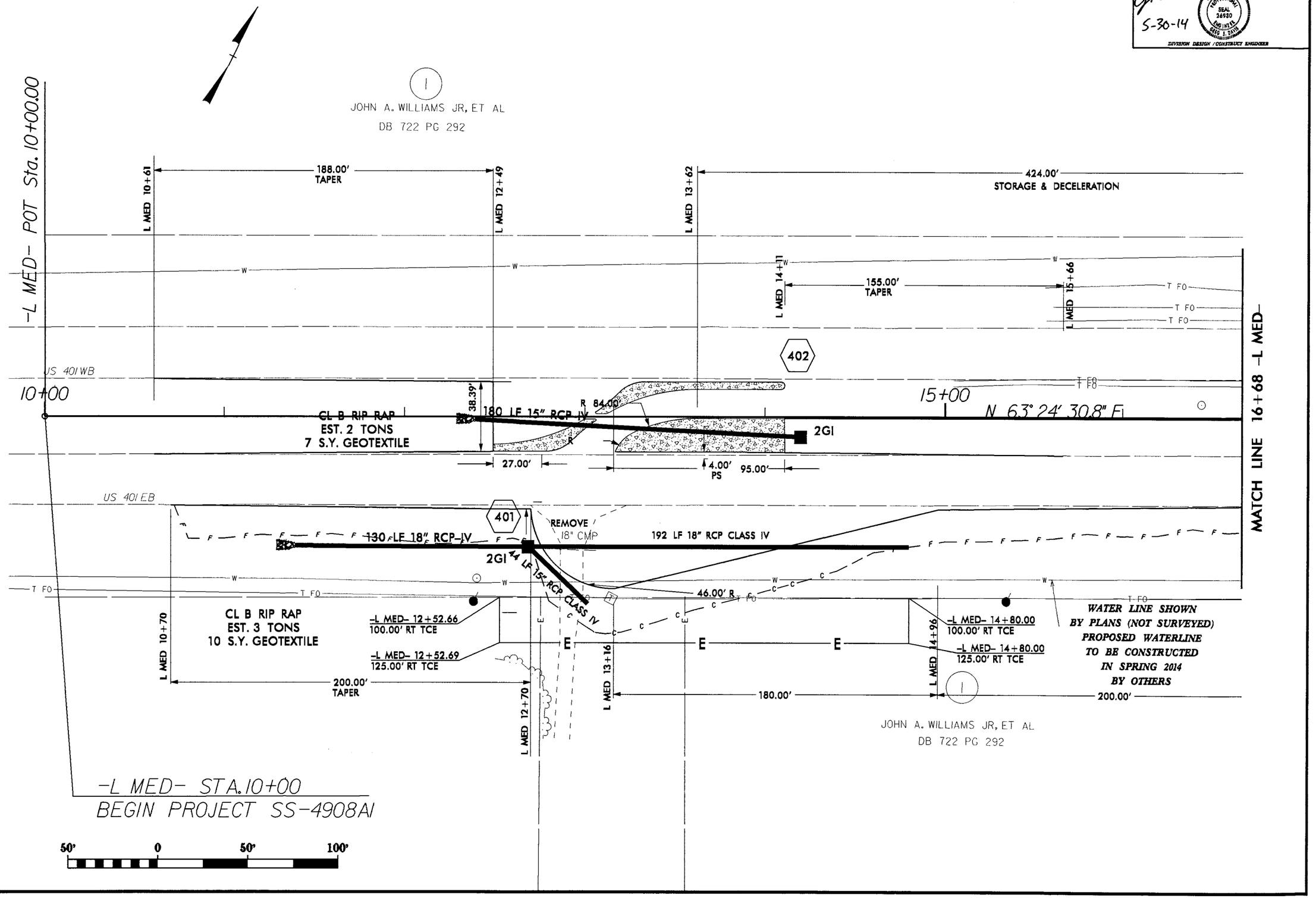

REVISIONS

8/17/99

29-MAY-2014 13:37
c:\div8_projects\rdu\HOKE\US401esr_1304(hobson_rd)\psh\dsn\401@1301 psh 4.dgn

PROJECT REFERENCE NO.	SHEET NO.
SS-4908AI	4-A
R/W SHEET NO.	

G S Ouis
5-30-14

NORTH CAROLINA PROFESSIONAL SEAL 26930 ENGINEER GREG S. DAVIS

DIVISION DESIGN / CONSTRUCT ENGINEER

NOTE: CONTRACTOR SHALL COORDINATE THE INSTALLATION OF SIGN POST HOLES IN CONCRETE ISLANDS WITH DIVISION 8 TRAFFIC SERVICES UNIT. REFER TO ROADWAY STANDARDS NOs. 901 THRU 904. SIGN HOLES SHALL EXTEND THROUGH PAVEMENT TO NATURAL GROUND.

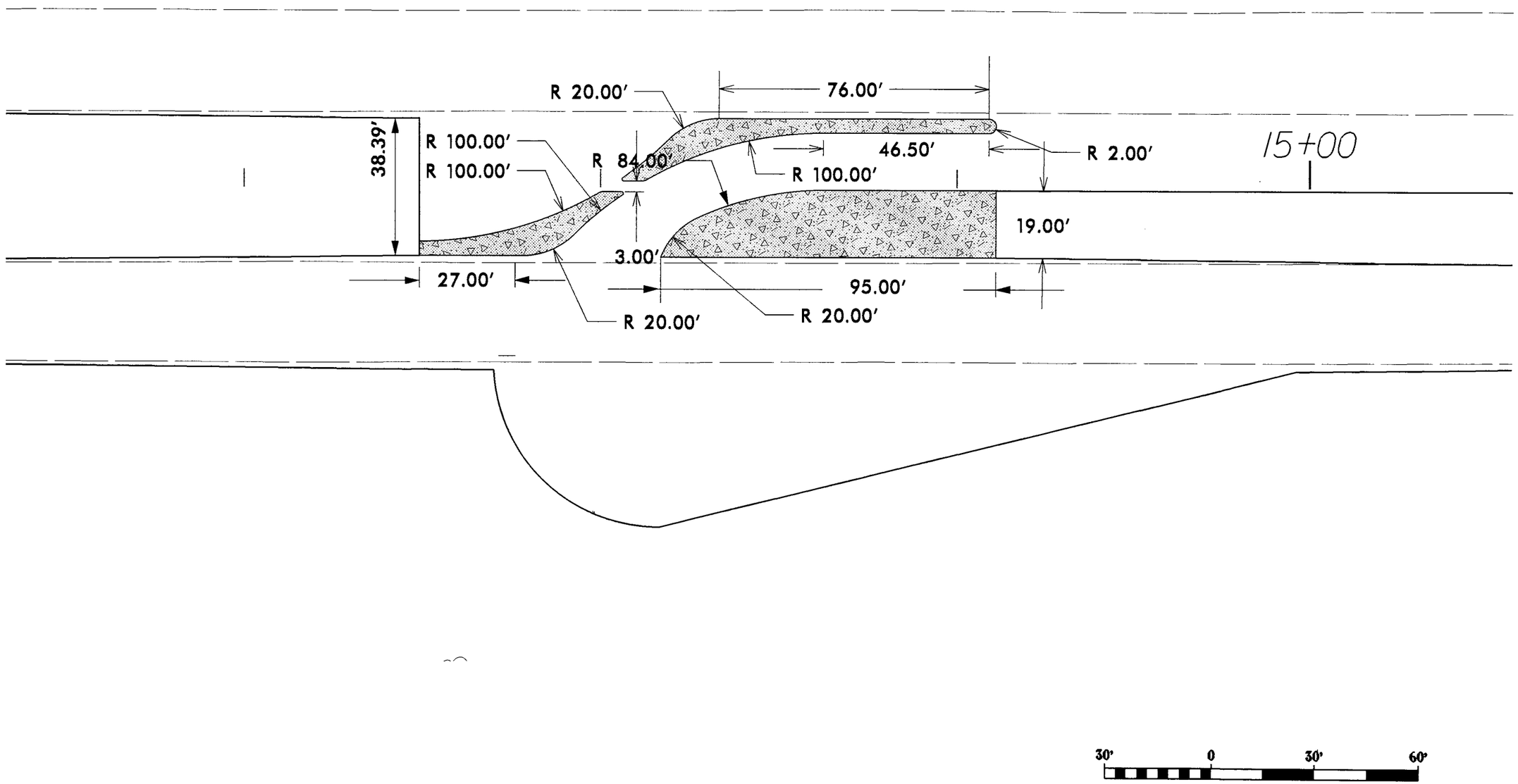

REVISIONS

8/17/99

29-MAY-2014 10:15
C:\div8_projects\rdy\HOKE\US401@sr_1304(hobson_rd)\psh\dsn\401@1301 psh 4A.dgn
psdpws AT DACAD-270410

PROJECT REFERENCE NO.	SHEET NO.
SS-4908AI	5
R/W SHEET NO.	

GSOui
5-30-14

NORTH CAROLINA TRANSPORTATION SEAL 26930 ENGINEER GREG S. DAVIS

DIVISION DESIGN / CONSTRUCT ENGINEER

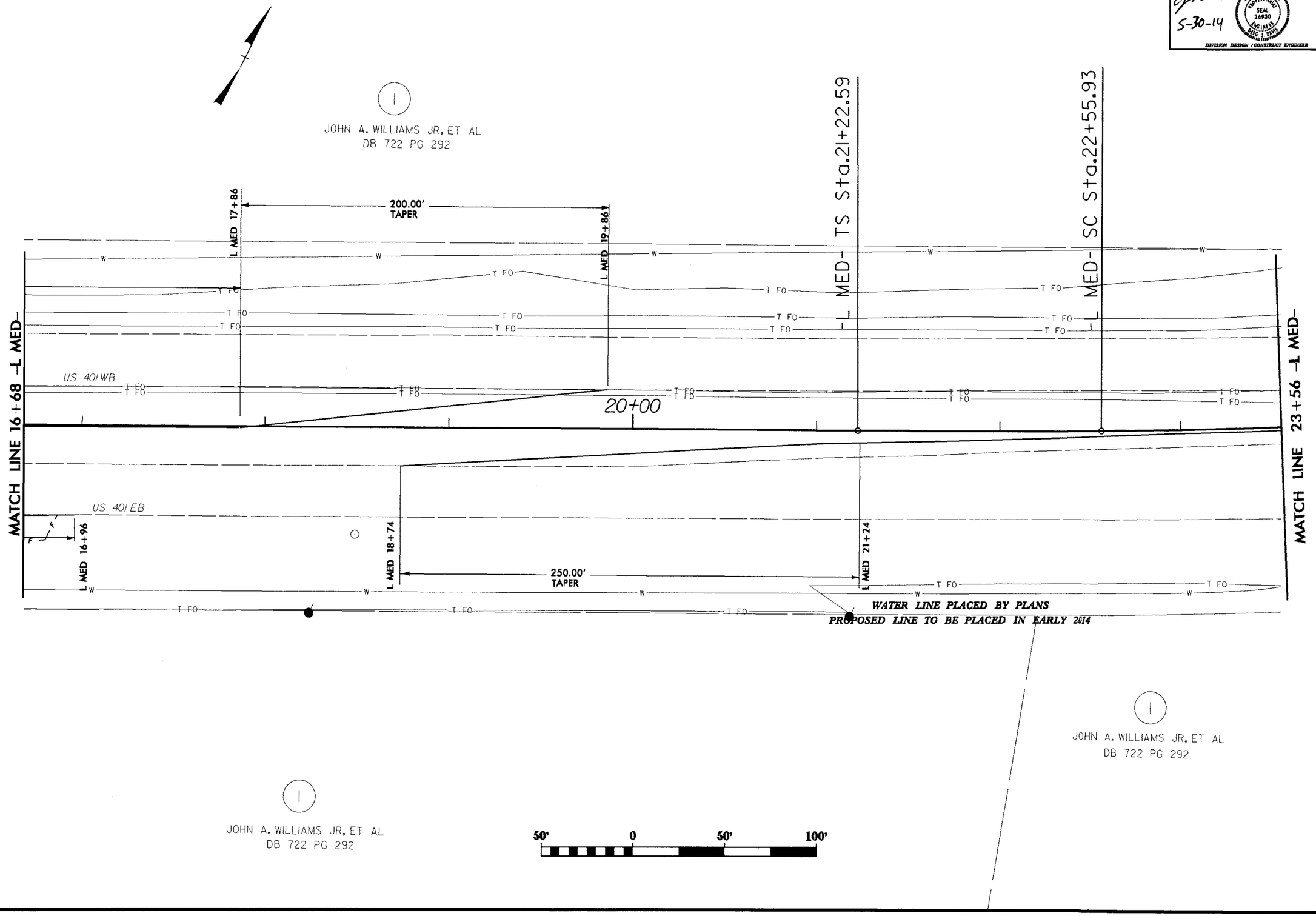

REVISIONS

8/17/99

29-MAY-2014 13:37
C:\div8_projects\rdu\HOKE\US401esr_1304(hobson_rd)\psh\dsn\401e1301 psh 5.dgn
psdavis - AT DBE ADJ 70410

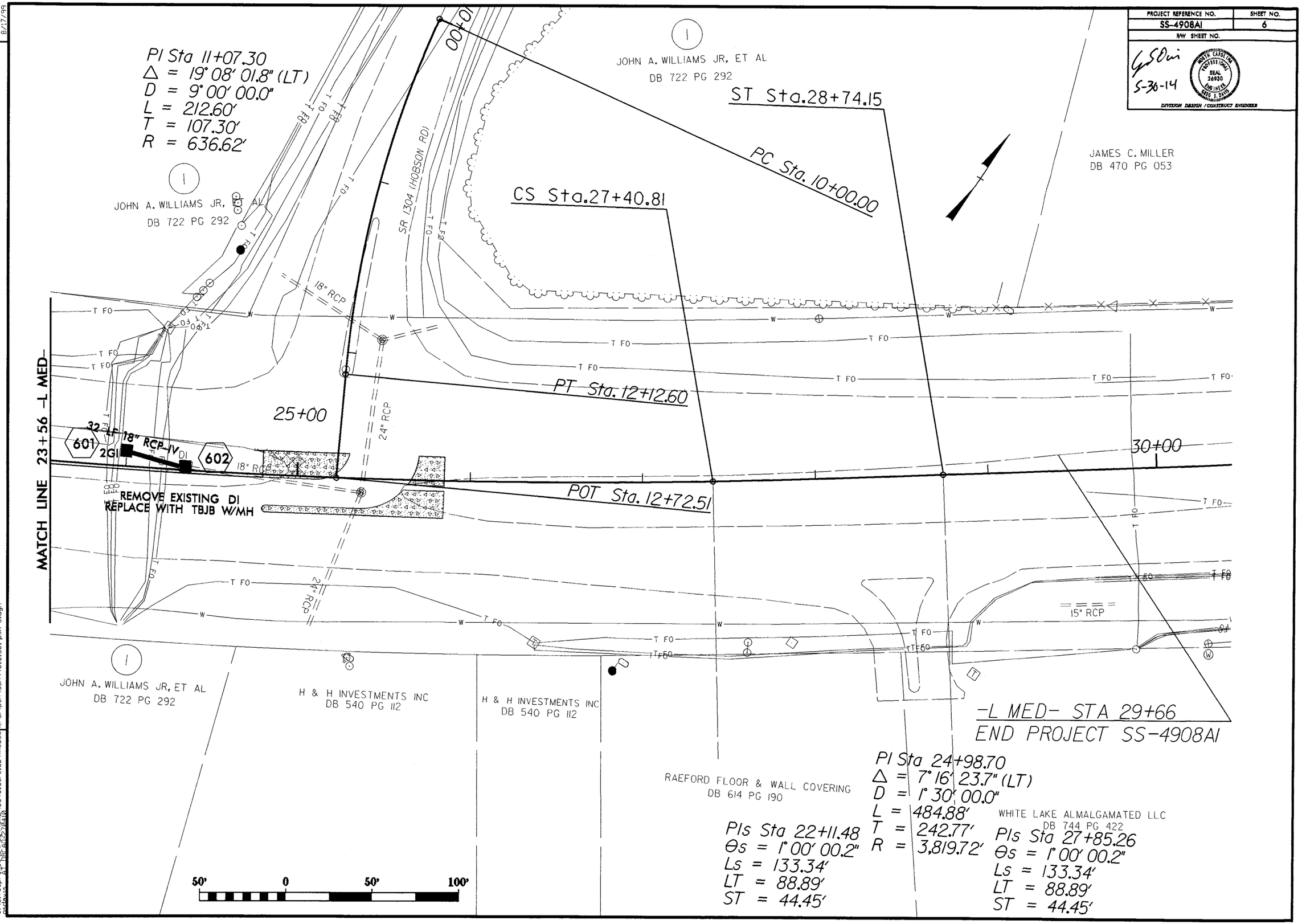
PROJECT REFERENCE NO.
SS-4908AI
SHEET NO.
6
R/W SHEET NO.
5-30-14
NORTH CAROLINA PROFESSIONAL SEAL 26930 ENGINEER GREG S. DAVIS
DIVISION DESIGN / CONSTRUCT ENGINEER
PI Sta 11+07.30
Δ = 19° 08' 01.8" (LT)
D = 9° 00' 00.0"
L = 212.60'
T = 107.30'
R = 636.62'
JOHN A. WILLIAMS JR, ET AL
DB 722 PG 292
ST Sta.28+74.15
PC Sta. 10+00.00
CS Sta.27+40.81
JAMES C. MILLER
DB 470 PG 053
SR 1304 (HOBSON RD)
18" RCP
24" RCP
PT Sta. 12+12.60
25+00
30+00
POT Sta. 12+72.51
MATCH LINE 23+56 -L MED-
32 LF 18" RCP-IV
601
2GI
DI
602
REMOVE EXISTING DI
REPLACE WITH TBJB W/MH
15" RCP
H & H INVESTMENTS INC
DB 540 PG 112
-L MED- STA 29+66
END PROJECT SS-4908AI
RAEFORD FLOOR & WALL COVERING
DB 614 PG 190
PI Sta 24+98.70
Δ = 7° 16' 23.7" (LT)
D = 1° 30' 00.0"
L = 484.88'
T = 242.77'
R = 3,819.72'
WHITE LAKE ALMALGAMATED LLC
DB 744 PG 422
PIs Sta 22+11.48
Θs = 1° 00' 00.2"
Ls = 133.34'
LT = 88.89'
ST = 44.45'
PIs Sta 27+85.26
Θs = 1° 00' 00.2"
Ls = 133.34'
LT = 88.89'
ST = 44.45'
50' 0 50' 100'
REVISIONS
8/17/99
29-MAY-2014 13:37
C:\div8_projects\rdy\HOKE\US401esr_1304(hobson_rd)\psh\dsn\401e1301 psh 6.dgn

PROJECT REFERENCE NO.	SHEET NO.
SS-4908AI	6-A
R/W SHEET NO.	

GSOni
5-30-14

NORTH CAROLINA PROFESSIONAL SEAL 26930 ENGINEER DAVID S. DAVIS

DIVISION DESIGN / CONSTRUCT ENGINEER

NOTE: CONTRACTOR SHALL COORDINATE THE INSTALLATION OF SIGN POST HOLES IN CONCRETE ISLANDS WITH DIVISION 8 TRAFFIC SERVICES UNIT. REFER TO ROADWAY STANDARDS NOs. 901 THRU 904. SIGN HOLES SHALL EXTEND THROUGH PAVEMENT TO NATURAL GROUND.

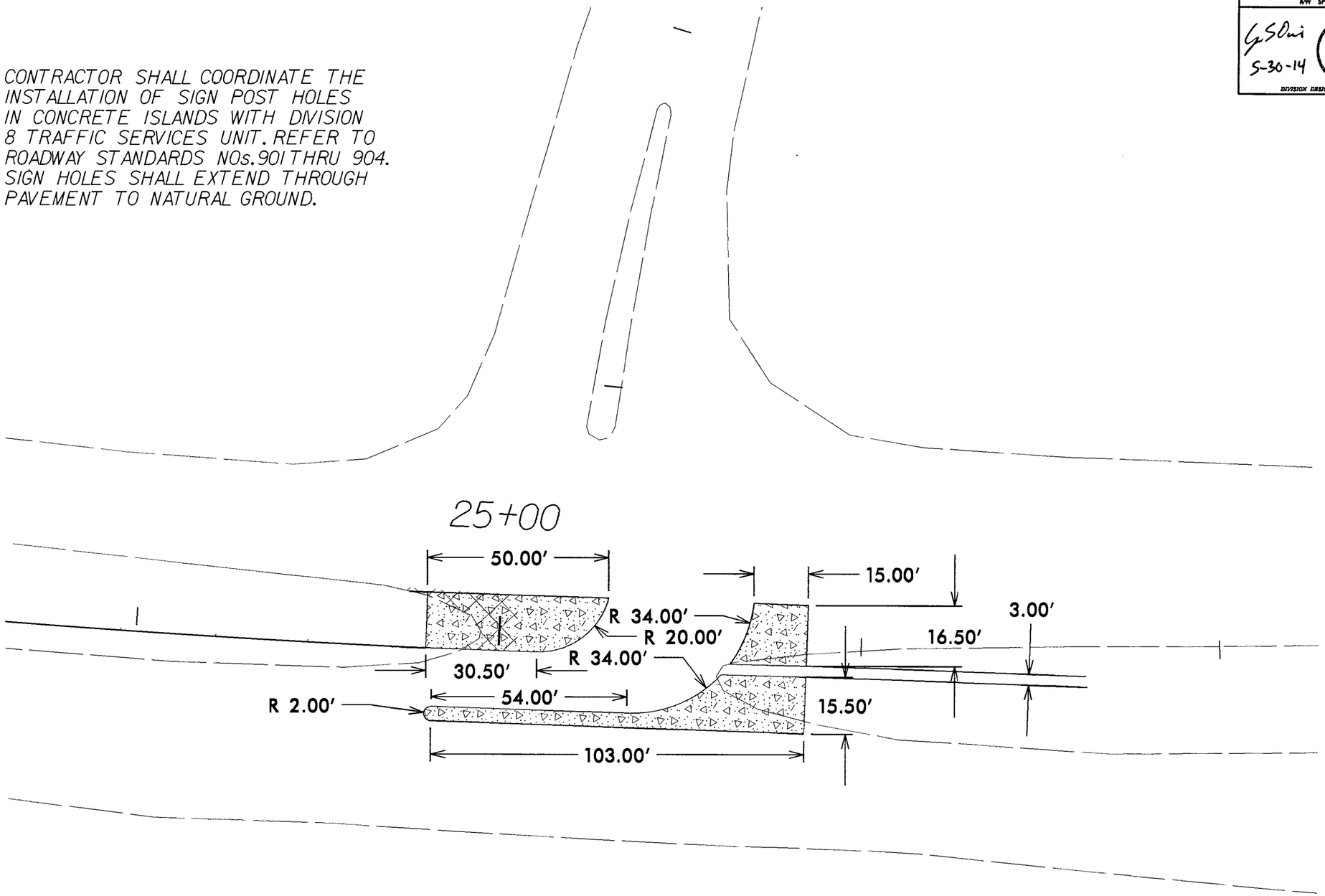



REVISIONS

8/17/99

29-MAY-2014 11:32
C:\div8_projects\rdy\HOKE\US401asr_1304(hobson_rd)\psh\dsn\401a1301 psh 6A.dgn

PROJECT REFERENCE NO.	SHEET NO.
SS-4908AI	PMP-1
R/W SHEET NO.	

5-30-14

NORTH CAROLINA PROFESSIONAL ENGINEER SEAL 26930 ENGINEER GREG J. DAVIS

DIVISION DESIGN / CONSTRUCT ENGINEER

PAVEMENT MARKING LEGEND

- --CRYSTAL / RED PAVEMENT MARKER
- --YELLOW / YELLOW PAVEMENT MARKER
- --CRYSTAL / CRYSTAL PAVEMENT MARKER

PAVEMENT MARKING LINES

T8 -	THERMOPLASTIC (4"	WHITE,	120 MILS)	2' X 6' SP MINISKIP
T9 -	THERMOPLASTIC (4"	YELLOW,	120 MILS)	2' X 6' SP MINISKIP
TA -	THERMOPLASTIC (4"	WHITE,	90 MILS)	EDGE LINE
TB -	THERMOPLASTIC (4"	YELLOW,	90 MILS)	EDGE LINE
TD -	THERMOPLASTIC (4"	WHITE,	120 MILS)	3' X 9' SP MINISKIP
TN -	THERMOPLASTIC (8"	WHITE,	90 MILS)	GORELINE
TO -	THERMOPLASTIC (8"	WHITE,	90 MILS)	DIAGONAL
TP -	THERMOPLASTIC (8"	YELLOW,	90 MILS)	DIAGONAL

PAVEMENT MARKING SYMBOLS

UA -	THERMOPLASTIC	(LEFT TURN ARROW, 90 MILS)
UC -	THERMOPLASTIC	(STRAIGHT ARROW, 90 MILS)
UT -	THERMOPLASTIC	(U TURN ARROW, 90 MILS)

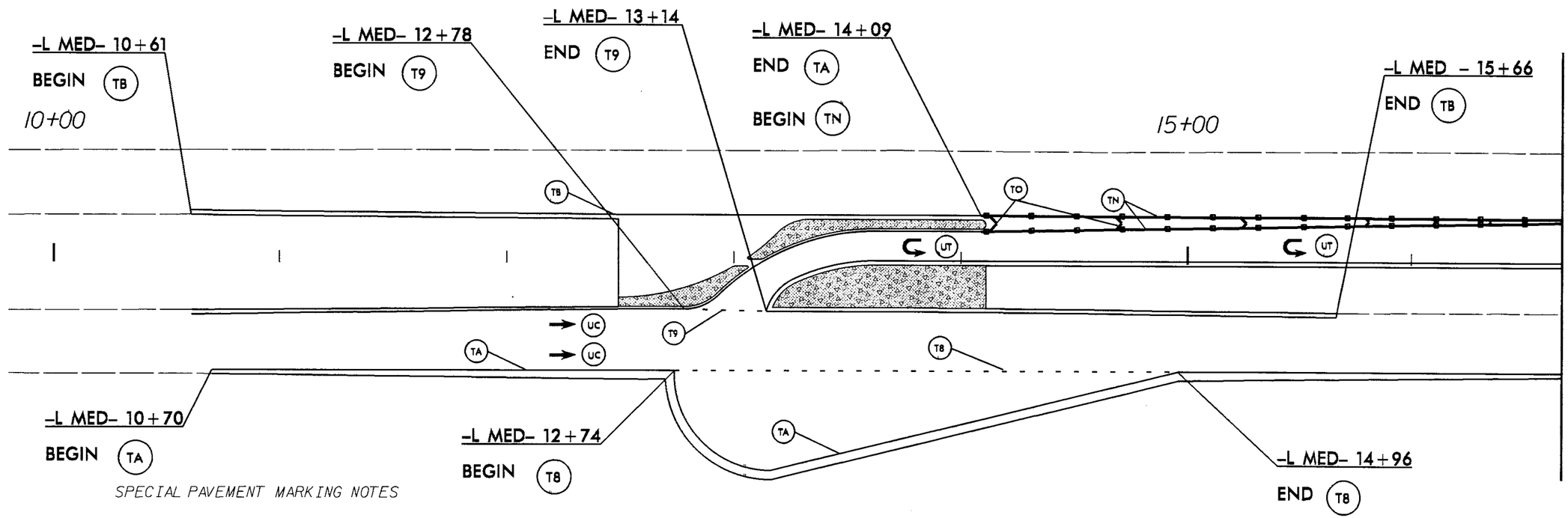

SPECIAL PAVEMENT MARKING NOTES

THE CONTRACTOR SHALL BE REQUIRED TO REMOVE ALL CONFLICTING PAVEMENT MARKINGS BY THE END OF THE WORKDAY.

THE CONTRACTOR SHALL INSTALL ALL PAVEMENT LINES AND SYMBOLS AS REQUIRED (SEE ROADWAY STANDARD DRAWINGS 1205.01 THRU 1205.13.

THE CONTRACTOR SHALL BE REQUIRED TO REPLACE ANY PAVEMENT MARKINGS, WHICH HAVE BEEN OBLITERATED BY CONSTRUCTION PROCEDURES, BY THE END OF THE WORKDAY.

THE CONTRACTOR SHALL BE REQUIRED TO COVER ALL CONFLICTING STATIONARY CONSTRUCTION SIGNING WHEN A LANE CLOSURE UTILIZING PORTABLE CONSTRUCTION SIGNS IS IN EFFECT. THE CONTRACTOR SHALL NOT HAVE AN OVERLAP IN THE SEQUENCE OF CONSTRUCTION SIGNING.

THE CONTRACTOR SHALL PLACE ALL FINAL PAVEMENT MARKING LINES AND SYMBOLS (THERMOPLASTIC ALKYD-MALEIC) USING THE EXTRUSION METHOD.

CHANGES TO PAVEMENT MARKINGS MAY AND SHALL BE MADE AT THE DIRECTION OF THE ENGINEER.

SPECIAL PAVEMENT MARKER NOTES

PAVEMENT MARKERS SHOULD NOT BE PLACED CLOSER THAN 2 INCHES TO A PAVEMENT CONSTRUCTION JOINT (AS FEASIBLE), EXCEPT WHEN PLACED BETWEEN DOUBLE YELLOW CENTER LINES, AND ALONG YELLOW SKIP LINES AND TWO-LANE, TWO-WAY ROADWAYS WHERE PASSING IS ALLOWED IN BOTH DIRECTIONS.

PAVEMENT MARKERS SHALL NOT BE PLACED DIRECTLY ON PAVEMENT MARKING LINES.

PAVEMENT MARKERS USED IN CONJUNCTION WITH DOUBLE YELLOW CENTER LINES SHALL BE PLACED MID-WAY BETWEEN THE LINES, PROVIDED WITH A GAP BETWEEN THE LINES AND THE MARKER TO REDUCE OVERSPRAYING THE MARKER DURING THE REPAINTING OPERATIONS.

MARKERS ARE NOT REQUIRED ALONG MINI-SKIP LINES IN TAPERS.

CHANGES TO PAVEMENT MARKERS MAY AND SHALL BE MADE AT THE DIRECTION OF THE ENGINEER.

50' 0 50' 100'

REVISIONS 8/17/99

23 MAY 2014 13:37
C:\Projects\Y-dd\HOKE\US401ter_1304\hobson_r-d\psh\pmp\SS-4908AI_pmp_psh1.dgn
dgnlib: SCDOT_ATR.dgnlib
default: SCDOT_ATR_2010

PROJECT REFERENCE NO.	SHEET NO.
SS-4908AI	PMP-2
R/W SHEET NO.	

GSOar 5-30-14

NORTH CAROLINA PROFESSIONAL SEAL 24930 ENGINEER DAVID T. DAVIS

DIVISION DESIGN / CONSTRUCT ENGINEERS

PAVEMENT MARKING LEGEND

- --CRYSTAL / RED PAVEMENT MARKER
- --YELLOW / YELLOW PAVEMENT MARKER
- --CRYSTAL / CRYSTAL PAVEMENT MARKER

PAVEMENT MARKING LINES

T8 -	THERMOPLASTIC (4"	WHITE,	120 MILS)	2' X 6' SP MINISKIP
T9 -	THERMOPLASTIC (4"	YELLOW,	120 MILS)	2' X 6' SP MINISKIP
TA -	THERMOPLASTIC (4"	WHITE,	90 MILS)	EDGE LINE
TB -	THERMOPLASTIC (4"	YELLOW,	90 MILS)	EDGE LINE
TD -	THERMOPLASTIC (4"	WHITE,	120 MILS)	3' X 9' SP MINISKIP
TN -	THERMOPLASTIC (8"	WHITE,	90 MILS)	GORELINE
TO -	THERMOPLASTIC (8"	WHITE,	90 MILS)	DIAGONAL
TP -	THERMOPLASTIC (8"	YELLOW,	90 MILS)	DIAGONAL

PAVEMENT MARKING SYMBOLS

UA -	THERMOPLASTIC	(LEFT TURN ARROW, 90 MILS)
UC -	THERMOPLASTIC	(STRAIGHT ARROW, 90 MILS)
UT -	THERMOPLASTIC	(U TURN ARROW, 90 MILS)

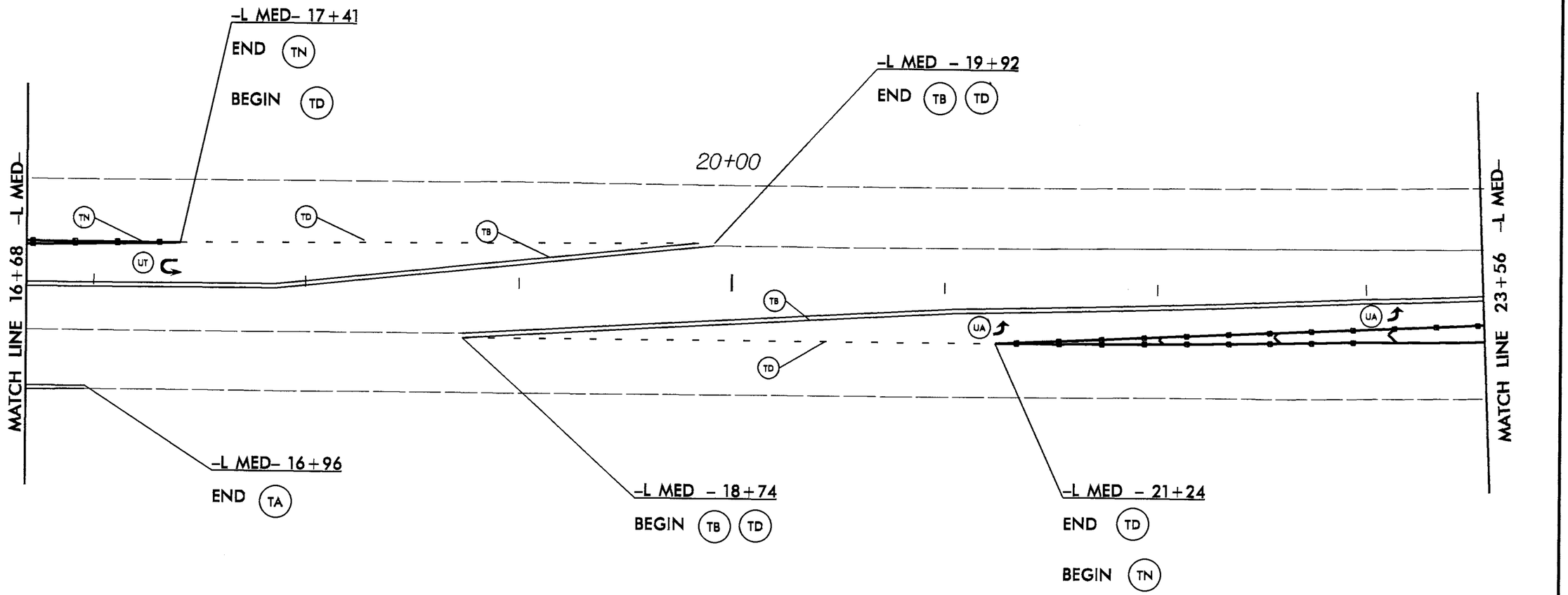

REVISIONS

8/17/99

23-MAY-2014 13:37
C:\Projects\HOKE\US401esr_1304\hobson_rdl\psh\pmp\SS-4908AI_pmp_psh2.dgn
default
Active PSC: 27040

PROJECT REFERENCE NO.	SHEET NO.
SS-4908AI	PMP-3
RW SHEET NO.	

5-30-14

NORTH CAROLINA PROFESSIONAL SEAL 26930 ENGINEER GREG S. DAVIS

DIVISION DESIGN / CONSTRUCT ENGINEER

PAVEMENT MARKING LEGEND

- --CRYSTAL / RED PAVEMENT MARKER
- --YELLOW / YELLOW PAVEMENT MARKER
- --CRYSTAL / CRYSTAL PAVEMENT MARKER

PAVEMENT MARKING LINES

T8 -	THERMOPLASTIC (4"	WHITE,	120 MILS)	2' X 6' SP MINISKIP
T9 -	THERMOPLASTIC (4"	YELLOW,	120 MILS)	2' X 6' SP MINISKIP
TA -	THERMOPLASTIC (4"	WHITE,	90 MILS)	EDGE LINE
TB -	THERMOPLASTIC (4"	YELLOW,	90 MILS)	EDGE LINE
TD -	THERMOPLASTIC (4"	WHITE,	120 MILS)	3' X 9' SP MINISKIP
TN -	THERMOPLASTIC (8"	WHITE,	90 MILS)	GORE LINE
TO -	THERMOPLASTIC (8"	WHITE,	90 MILS)	DIAGONAL
TP -	THERMOPLASTIC (8"	YELLOW,	90 MILS)	DIAGONAL

PAVEMENT MARKING SYMBOLS

UA -	THERMOPLASTIC	(LEFT TURN ARROW, 90 MILS)
UC -	THERMOPLASTIC	(STRAIGHT ARROW, 90 MILS)
UT -	THERMOPLASTIC	(U TURN ARROW, 90 MILS)

-Y1- 11+23
BEGIN (TB)

-Y1- 12+12
END (TB)

-L MED - 24+69
BEGIN (TB)

-L MED - 25+30
END (TB)
BEGIN (T9)

-L MED - 25+69
END (TA) (T9)
BEGIN (TB) (TP)

-L MED- 29+66
END (TB) (TP)

25+00

30+00

18'

4'

4'

MATCH LINE 23+56 -L MED-

MATCH LINE 26+37 -L MED-

-L MED - 24+82
END (TN)
BEGIN (TA) (TB)

-L MED- 26+37
END (TB)

50' 0 50' 100'

REVISIONS

8/17/99

23-MAY-2014 13:37
R:\Projects\SP 8 R\rdu\HOKES\US401Esr_1304\hobson_rdl\psh\pmp\SS-4908AI_pmp_psh3.dgn
$I(USERNAME) $I(ORGANIZATION)

See Sheet ECP 11A-B for Index of Sheets

STATE OF NORTH CAROLINA
DIVISION OF HIGHWAYS

STATE	STATE PROJECT REFERENCE NO.	SHEET NO.
N.C.	SS-4908AI	ECP-1

STATE PROJ. NO.	F.A. PROJ. NO.	DESCRIPTION
43574.1.1		PE
43574.2.1		R/W
43574.3.1		CONST.

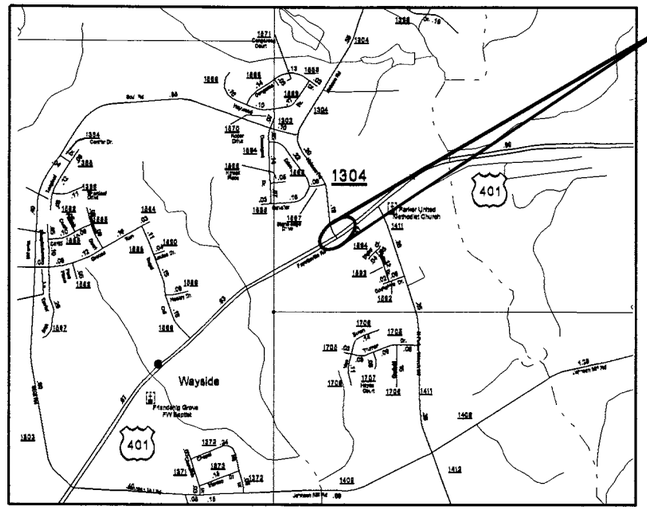

PROJECT LOCATION

PLAN FOR PROPOSED
HIGHWAY EROSION CONTROL
HOKE COUNTY

LOCATION: US 401 AT SR 1304 (HOBSON RD.)

TYPE OF WORK: GRADING, PAVING, DRAINAGE, CONCRETE ISLANDS, THEMOPLASTIC MARKINGS & MARKERS

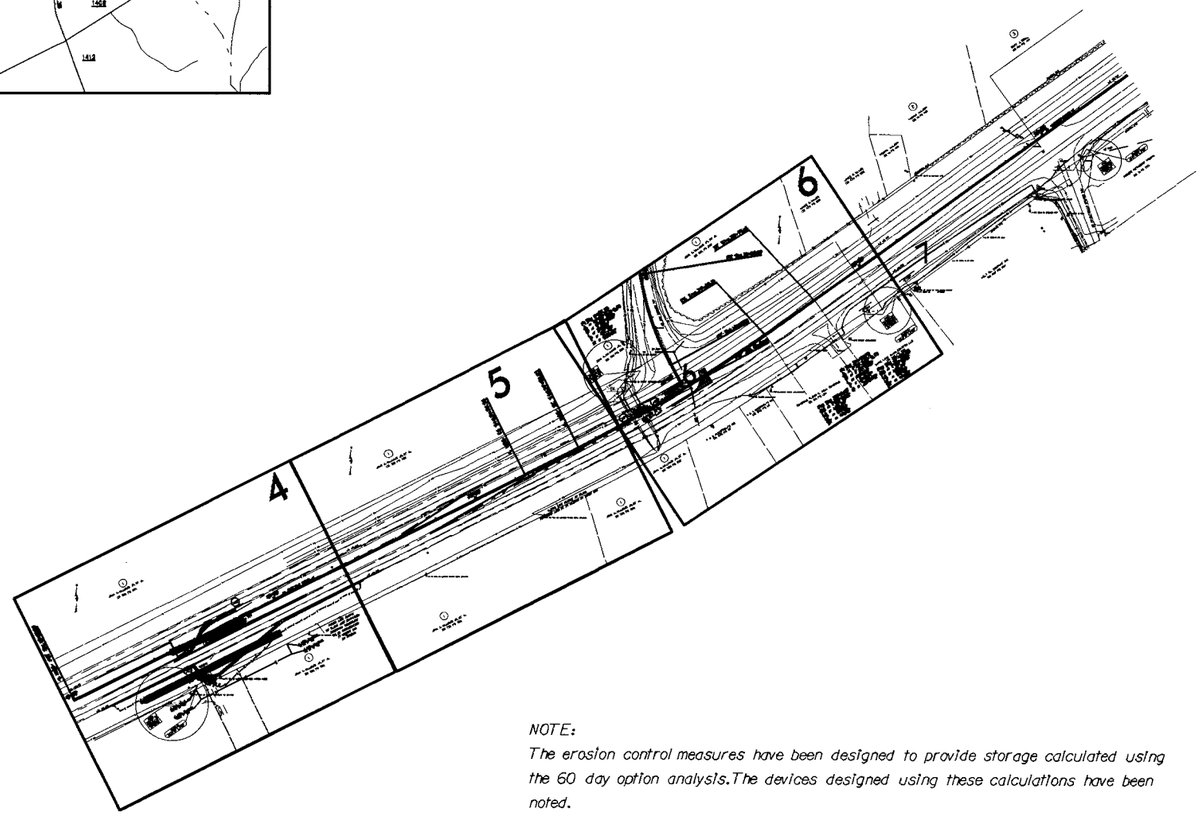

NOTE:
The erosion control measures have been designed to provide storage calculated using the 60 day option analysis. The devices designed using these calculations have been noted.

EROSION AND SEDIMENT CONTROL MEASURES

Std. #	Description	Symbol
	Streambank Reforestation	
1630.03	Temporary Silt Ditch	TD
1630.05	Temporary Diversion	TD
1605.01	Temporary Silt Fence	
1606.01	Special Sediment Control Fence	
1622.01	Temporary Berms and Slope Drains	
1630.01	Riser Basin	
1630.02	Silt Basin Type B	
1633.01	Temporary Rock Silt Check Type-A	
1633.02	Temporary Rock Silt Check Type-B	
1634.01	Temporary Rock Sediment Dam Type-A	
1634.02	Temporary Rock Sediment Dam Type-B	
1635.01	Rock Pipe Inlet Sediment Trap Type-A	
1635.02	Rock Pipe Inlet Sediment Trap Type-B	
1636.01	Rock Silt Screen	
1630.04	Stilling Basin	
	Rock Inlet Sediment Trap:	
1632.01	Type A	A - OR - A
1632.02	Type B	B - OR - B
1632.03	Type C	C - OR - C
	Wattle	

CONTRACT:

TIP PROJECT: SS-4908AI

Prepared By:
Greg S. Davis, PE
Level III A #3088
December 31, 2014

PROJECT CONTACTS:
District Engineer Marty Tillman, PE
Design & Construct Engineer Greg S. Davis, PE
Resident Engineer Charles E. Dumas Jr, PE

PROJECT LENGTH
0.37 mi.

Prepared in the Office of:
DIVISION EIGHT
DIVISION DESIGN & CONSTRUCT UNIT
902 N Sandhills Blvd.
PO Box 1067
Aberdeen, 28315

2012 STANDARD SPECIFICATIONS

Roadway Standard Drawings

The following roadway english standards as appear in "Roadway Standard Drawings"- Roadway Design Unit - N. C. Department of Transportation - Raleigh, N. C., dated January 17, 2012 and the latest revison thereto are applicable to this project and by reference hereby are considered a part of these plans.

1605.01	Temporary Silt Fence	1632.01	Rock Inlet Sediment Trap Type A
1606.01	Special Sediment Control Fence	1632.03	Rock Inlet Sediment Trap Type C
1622.01	Temporary Berms and Slope Drains	1633.01	Temporary Rock Silt Check Type A
1630.01	Riser Basin	1633.02	Temporary Rock Silt Check Type B
1630.02	Silt Basin Type B	1634.01	Temporary Rock Sediment Dam Type A
1630.03	Temporary Silt Ditch	1634.02	Temporary Rock Sediment Dam Type B
1630.04	Stilling Basin	1635.01	Rock Pipe Inlet Sediment Trap Type A
1630.05	Temporary Diversion	1636.01	Rock Silt Screen

09/08/99
29-MAY-2014 10:15
C:\div8_projects\rdy\HOKE\US401@sr_1304(hobson_rd)\psh\ecp\us401@SR-1304(hobson_rd)_ECP_tsh.dgn
gsdavis AT D8CAD-270410

TIP PROJECT	SHEET NO
55-4908A1	ECP-2

COIR FIBER BAFFLE DETAIL

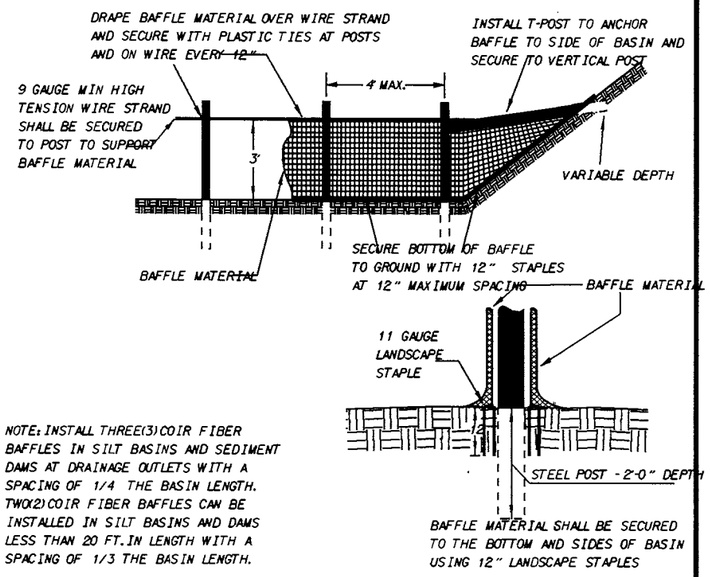

NOTE: INSTALL THREE(3) COIR FIBER BAFFLES IN SILT BASINS AND SEDIMENT DAMS AT DRAINAGE OUTLETS WITH A SPACING OF 1/4 THE BASIN LENGTH. TWO(2) COIR FIBER BAFFLES CAN BE INSTALLED IN SILT BASINS AND DAMS LESS THAN 20 FT. IN LENGTH WITH A SPACING OF 1/3 THE BASIN LENGTH.

EROSION CONTROL DETAILS AND SPECIFICATIONS

STD. #	DESCRIPTION	SYMBOL
1630.03	TEMPORARY SILT DITCH	TSD
1630.05	TEMPORARY DIVERSION	TD
1605.01	TEMPORARY SILT FENCE	
1622.01	GUIDE FOR TEMPORARY BERMS & SLOPE DRAINS	
1630.01	Riser Basin	
1630.02	SILT BASIN TYPE-B	
1633.01	TEMPORARY ROCK SILT CHECK TYPE-A	
	Wattle	
1633.02	TEMPORARY ROCK SILT CHECK TYPE-B	
1634.01	TEMPORARY ROCK SEDIMENT DAM TYPE-A	
1634.02	TEMPORARY ROCK SEDIMENT DAM TYPE-B	
1635.01	ROCK PIPE INLET SEDIMENT TRAP TYPE A	
1636.01	ROCK SILT SCREEN	
1630.04	STILLING BASIN FOR PUMPED EFFLUENT	
	ROCK INLET SEDIMENT PROTECTION	
1632.01	TRAP TYPE-A	A OR A
1632.02	TRAP TYPE-B	B OR B
1632.03	TRAP TYPE-C	C OR C

NARRATIVE

1. SOIL TYPE: CLAY SAND X

2. IS THE PROJECT LOCATED IN A HIGH QUALITY WATER ZONE?
YES X NO

3. ARE THERE ANY WETLANDS ADJOINING THIS PROJECT?
YES X NO

SITE DESCRIPTION

This project is located on US 401 on the Eastern side of Raeford. The area surrounding this project primarily consists of wooded areas, commercial development, and agricultural fields. The drainage consists of roadway ditches that lead to existing ditches.

PROJECT DESCRIPTION

The project will consist of clearing, grubbing, draining, setting up the base and paving. The major land disturbing activites will consist of clearing and grading within the right of way. Temporary and permanent erosion control measures will be installed.

MAINTENANCE SCHEDULE

1. INSPECT WEEKLY AND AFTER EACH RAINFALL USE THE DEPARTMENT OF TRANSPORTATION'S EROSION CONTROL INSPECTION REPORT.

2. MAINTAIN EROSION CONTROL DEVICES AS FOLLOWS:

A. SILT DITCH - REMOVE SEDIMENT FROM THE FLOW AREA AND REPAIR THE DIVERSION RIDGE - CAREFULLY CHECK OUTLETS AND MAKE TIMELY REPAIRS AS NEEDED.

B. SILT FENCE - REMOVE SEDIMENT DEPOSITS AS NECESSARY TO PROVIDE ADEQUATE STORAGE VOLUME FOR THE NEXT RAIN AND TO REDUCE PRESSURE ON THE FENCE - AVOID UNDERMINING THE FENCE.

C. SLOPE DRAINS - INSPECT THE SLOPE DRAINS AND SUPPORTING DIVERSIONS.

D. SEDIMENT BASIN - REMOVE SEDIMENT AND RESTORE THE BASIN TO ITS ORIGINAL DIMENSIONS WHEN SEDIMENT ACCUMULATES TO ONE-HALF THE DESIGN DEPTH - CHECK THE EMBANKMENT, SPILLWAYS, AND OUTLET FOR EROSION DAMAGE, AND INSPECT THE EMBANKMENT FOR PIPING AND SETTLEMENT - REMOVE ALL TRASH AND OTHER DEBRIS FROM THE RISER AND POOL AREA.

E. CHECK DAM - REMOVE SETTLEMENT ACCUMULATED BEHIND THE DAMS AS NEEDED TO PREVENT DAMAGE TO CHANNEL VEGETATION - ADD STONE TO DAMS AS NEEDED TO MAINTAIN DESIGN HEIGHT AND CROSS SECTION.

F. ROCK DAM - REMOVE SEDIMENT AND RESTORE ORIGINAL VOLUME WHEN SEDIMENT ACCUMULATES TO ONE-HALF THE DESIGN VOLUME - CHECK THE STRUCTURE FOR EROSION, PIPING, AND ROCK DISPLACEMENT AFTER EACH SIGNIFICANT RAINSTORM AND REPAIR IMMEDIATELY.

G. DROP INLET PROTECTION (TYPE C) - REMOVE SEDIMENT FROM THE POOL AREAS AS NECESSARY TO PROVIDE ADEQUATE STORAGE VOLUME FOR THE NEXT RAIN.

H. SEDIMENT TRAP - REMOVE SEDIMENT AND RESTORE THE TRAP TO ITS ORIGINAL DIMENSIONS WHEN SETTLEMENT HAS ACCUMULATED TO ONE-HALF THE DESIGN DEPTH OF THE TRAP - CHECK THE STRUCTURE FOR DAMAGE FROM EROSION OR PIPING TO ENSURE IT IS A MINIMUM OF 1.5 FT. BELOW THE LOW POINT OF THE EMBANKMENT.

NOTE: SEDIMENT SHOULD BE PLACED IN DESIGNATED DISPOSAL AREAS AND NOT ALLOWED TO FLOW INTO STREAMS OR DRAINAGE WAYS DURING STRUCTURE REMOVAL.

NOTE: ALL SEDIMENT TRAPS/BASINS SHALL HAVE COIR FIBER BAFFLES. BASINS/TRAPS OVER 10 FT IN LENGTH SHALL HAVE TWO ROWS.

NOTE: NO PAM TO USED WITH THE LAST BMT (WATTLE) AT OUTLET OF THE PROJECT

NOTE: The erosion control measures have be designed to provide a minimum of 2.1% of the storage calculated using the RUSLE2 analysis. These sections of disturbed area must then be permanently stabilized within 60 days from the time grading begins.

GENERAL CONSIDERATIONS

1. THE LAW REQUIRES INSTALLATION AND MAINTENANCE OF SUFFICIENT EROSION CONTROL PRACTICES TO RETAIN SEDIMENT WITHIN THE BOUNDARIES OF THE SITE. IT ALSO REQUIRES THAT SURFACES BE NON EROSIVE AND STABLE WITHIN 14 DAYS CALENDAR DAYS AFTER THE COMPLETION OF ANY PHASE OF GRADING.

2. FIT THE DEVELOPMENT TO THE SITE - FOLLOW THE NATURAL CONTOURS AS MUCH AS POSSIBLE. PRESERVE AND USE NATURAL DRAINAGE SYSTEMS.

3. LIMIT CLEARING AND GRUBBING - CLEARLY DEFINE WORK LIMIT LINES. GRADE TO MINIMIZE CUT-AND-FILL SLOPES, PRESERVE NATURAL BUFFER AREAS, AND LIMIT THE TIME THAT BARE SOIL IS EXPOSED.

4. PROTECT THE SOIL SURFACE - LIMIT THE EXTENT OF DISTURBANCE AND STABILIZE THE SOIL SURFACE IMMEDIATELY. ONCE THE SURFACE HAS BEEN DISTURBED, IT IS SUBJECT TO ACCELERATED EROSION AND SHOULD BE PROTECTED WITH APPROPRIATE COVER, SUCH AS MULCH OR VEGETATION IN AN EXPEDIENT MANNER.

5. SEDIMENT BASINS AND TRAPS - SELECT SITES AND INSTALL SEDIMENT BASINS AND TRAPS BEFORE OTHER CONSTRUCTION ACTIVITIES ARE STARTED. ALSO CONSIDER LOCATIONS FOR DIVERSIONS, OPEN CHANNELS, AND STORM DRAINS AT THIS TIME SO THAT ALL SEDIMENT-LADEN TO RUN OFF CAN BE DIRECTED TO AN IMPOUNDMENT STRUCTURE BEFORE LEAVING THE CONSTRUCTION SITE. INSTALL ALL MEASURES AND RELEASE POINTS PRIOR TO CLEARING AND GRUBBING.

6. ONCE AN AREA IS DISTURBED, IT IS SUBJECT TO ACCELERATED EROSION. EROSION CONSTROL CAN BE ACHIEVED BY:

   * LIMITING THE SIZE OF THE CLEARING AND TIME OF EXPOSURE BY PROPER SCHEDULING.
   * REDUCING THE AMOUNT OF RUNOFF OVER THE DISTURBED SURFACE.
   * LIMITING GRADES AND LENGTHS OF SLOPES, AND
   * RE-ESTABLISHING PROTECTIVE COVER IMMEDIATELY AFTER LAND DUSTURBING ACTIVITIES ARE COMPLETED OR WHEN CONSTRUCTION ACTIVITES ARE DELAYED FOR THIRTY (30) OR MORE WORKING DAYS

7. STABILIZE CONSTRUCTION ACCESS AREAS, CONSTRUCTION ROADS, AND PARKING AREA DURING INITIAL ACTIVITIES. TRY TO KEEP ROAD GRADES TO A MINIMUM GENERALLY NEVER EXCEEDING 12%.

8. CLEAR BORROW AND WASTE DISPOSAL AREAS AS NEEDED AND PROTECT THEM FROM SURFACE RUNOFF. SLOPE ALL AREAS TO PROVIDE POSITIVE DRAINAGE, AND STABILIZE BARE SOIL SURFACES WITH PERMANENT VEGETATION OR MULCH AS SOON AS FINAL GRADES ARE PREPARED. DIRECT ALL RUNOFF THAT CONTAINS SEDIMENT TO A SEDIMENT-TRAPPING DEVICE. IN LARGE BORROW AND DISPOSAL SITES, SHAPE AND DEEPEN THE LOWER END TO FORM AN IN-PLACE SEDIMENT TRAP.

9. ONLY SEDIMENT-FREE RUNOFF MAY BE DISCHARGED FROM CONSTRUCTION SITES DIRECTLY INTO STREAMS. ENSURE THAT ALL OTHER FLOWS ENTER FROM DESILTING POOLS FORMED BY SEDIMENT TRAPS OR BARRIERS.

10. AREAS ADJOINING STREAMS SHOULD BE LEFT UNDISTURBED AS BUFFERS. WHERE NATURAL BUFFERS ARE NOT AVAILABLE, PROVIDE ARTIFICIAL BUFFERS. WHERE WORK IS REQUIRED ALONG A STREAM, PROVIDE MECHANICAL OR ARTIFICIAL BUFFER (25 FEET MINIMUM REQUIRED).

11. BEFORE MOVING TO NEXT JOB SITE, REVIEW ALL MEASURES FOR EFFECTIVENESS; MAKE ANY ADJUSTMENTS, CLEAR-OUTS, OR REPAIR; CALL ROADSIDE ENVIRONMENTAL DEPARTMENT FOR INSTALLATION OF A DITCH LINER AND SEEDING AND MULCHING OF ALL DISTURBED AREAS.

12. CONTINUE TO CHECK AND MAINTAIN ALL MEASURES AFTER EACH SIGNIFICANT RAINFALL UNTIL ALL DISTURBED AREAS BECOME STABILIZED.

13. FILL IN ALL SILT BASINS AND SILT DITCHES. REMOVE ALL SILT FENCES AND SLOPE DRAINS. REDISTRIBUTE ALL STONE FROM SILT CHECKS, SEDIMENT DAMS, AND SILT SCREENS. SEED AND MULCH DISTURBED AREAS.

TIP PROJECT	SHEET NO
55-4908AI	ECP-2A

WATTLE WITH POLYACRYLAMIDE (PAM) DETAIL

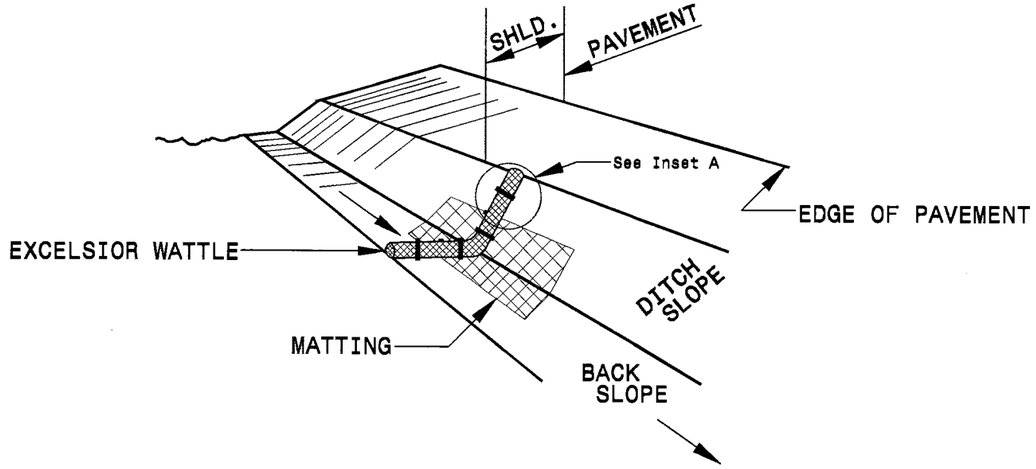

ISOMETRIC VIEW

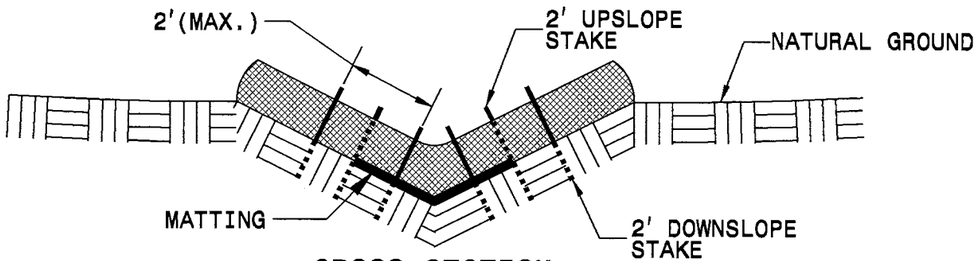

CROSS SECTION VEE DITCH

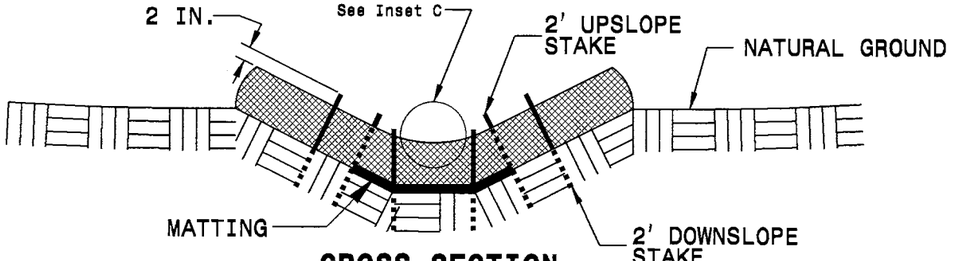

CROSS SECTION TRAPEZOIDAL DITCH

NOTES:

USE MINIMUM 12 IN. DIAMETER EXCELSIOR WATTLE.

USE 2 FT. WOODEN STAKES WITH A 2 IN. BY 2 IN. NOMINAL CROSS SECTION.

ONLY INSTALL WATTLE(S) TO A HEIGHT IN DITCH SO FLOW WILL NOT WASH AROUND WATTLE AND SCOUR DITCH SLOPES AND AS DIRECTED.

INSTALL A MINIMUM OF 2 UPSLOPE STAKES AND 4 DOWNSLOPE STAKES AT AN ANGLE TO WEDGE WATTLE TO BOTTOM OF DITCH.

PROVIDE STAPLES MADE OF 0.125 IN. DIAMETER STEEL WIRE FORMED INTO A U SHAPE NOT LESS THAN 12" IN LENGTH.

INSTALL STAPLES APPROXIMATELY EVERY 1 LINEAR FOOT ON BOTH SIDES OF WATTLE AND AT EACH END TO SECURE IT TO THE SOIL.

INSTALL MATTING IN ACCORDANCE WITH SECTION 1631 OF THE STANDARD SPECIFICATIONS.

PRIOR TO POLYACRYLAMIDE (PAM) APPLICATION, OBTAIN A SOIL SAMPLE FROM PROJECT LOCATION, AND FROM OFFSITE MATERIAL, AND ANALYZE FOR APPROPRIATE PAM FLOCCULANT TO BE APPLIED TO EACH WATTLE.

INITIALLY APPLY 2 OUNCES OF ANIONIC OR NEUTRALLY CHARGED PAM OVER WATTLE WHERE WATER WILL FLOW AND 1 OUNCE OF PAM ON MATTING ON EACH SIDE OF WATTLE. REAPPLY PAM AFTER EVERY RAINFALL EVENT THAT IS EQUAL TO OR EXCEEDS 0.50 IN.

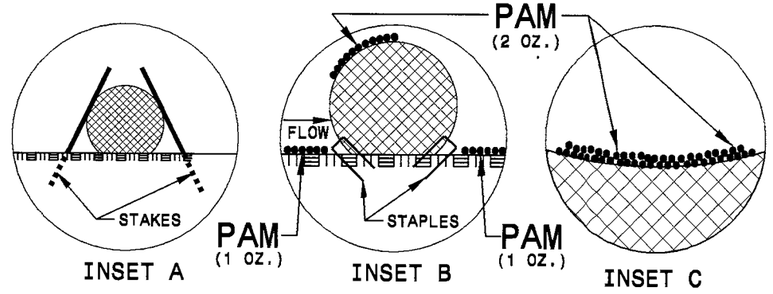

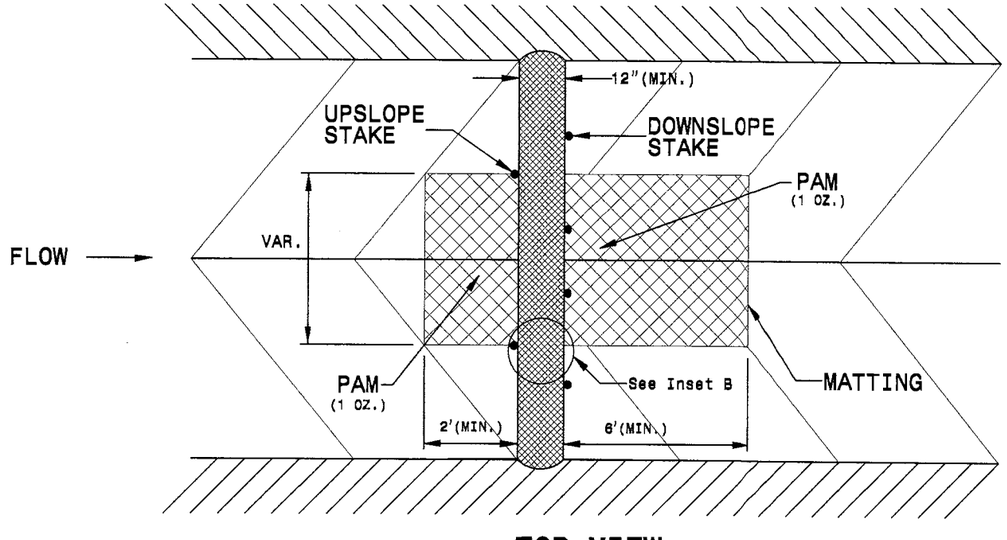

TOP VIEW

29-MAY-2014 10:15
C:\dms_projects\pamhokey\us401qsr_1304hob
qsr1304 N_DSAD_270410

PROJECT REFERENCE NO.	SHEET NO.
SS-4908AI	ECP-2B

DIVISION OF HIGHWAYS
STATE OF NORTH CAROLINA

SOIL STABILIZATION TIMEFRAMES

SITE DESCRIPTION	*STABILIZATION TIME*	*TIMEFRAME EXCEPTIONS*
PERIMETER DIKES, SWALES, DITCHES AND SLOPES	7 DAYS	NONE
HIGH QUALITY WATER (HQW) ZONES	7 DAYS	NONE
SLOPES STEEPER THAN 3:1	7 DAYS	IF SLOPES ARE 10' OR LESS IN LENGTH AND ARE NOT STEEPER THAN 2:1, 14 DAYS ARE ALLOWED.
SLOPES 3:1 OR FLATTER	14 DAYS	7 DAYS FOR SLOPES GREATER THAN 50' IN LENGTH.
ALL OTHER AREAS WITH SLOPES FLATTER THAN 4:1	14 DAYS	NONE, EXCEPT FOR PERIMETERS AND HQW ZONES.

PROJECT REFERENCE NO.	SHEET NO.
SS-4908AI	ECP-2C

DIVISION OF HIGHWAYS
STATE OF NORTH CAROLINA

SOIL STABILIZATION SUMMARY SHEET

PERMANENT SOIL REINFORCEMENT MAT

CONST SHEET NO.	LINE	FROM STATION	TO STATION	SIDE	ESTIMATE (SY)
4	-L MED-	10+80	12+70	RT	435
				SUBTOTAL	435
	ADDITIONAL PSRM TO BE INSTALLED				
				TOTAL	435
				SAY	435

EROSION CONTROL MATTING

CONST SHEET NO.	LINE	FROM STATION	TO STATION	SIDE	ESTIMATE (SY)
4	-L MED-	10+80	12+40	CL	710
4	-L MED-	13+00	14+40	RT	245
				SUBTOTAL	955
	ADDITIONAL EC MATTING TO BE INSTALLED				130
				TOTAL	1085
				SAY	1100

PROJECT REFERENCE NO.	SHEET NO.
SS-4908AI	ECP-3
R/W SHEET NO.	

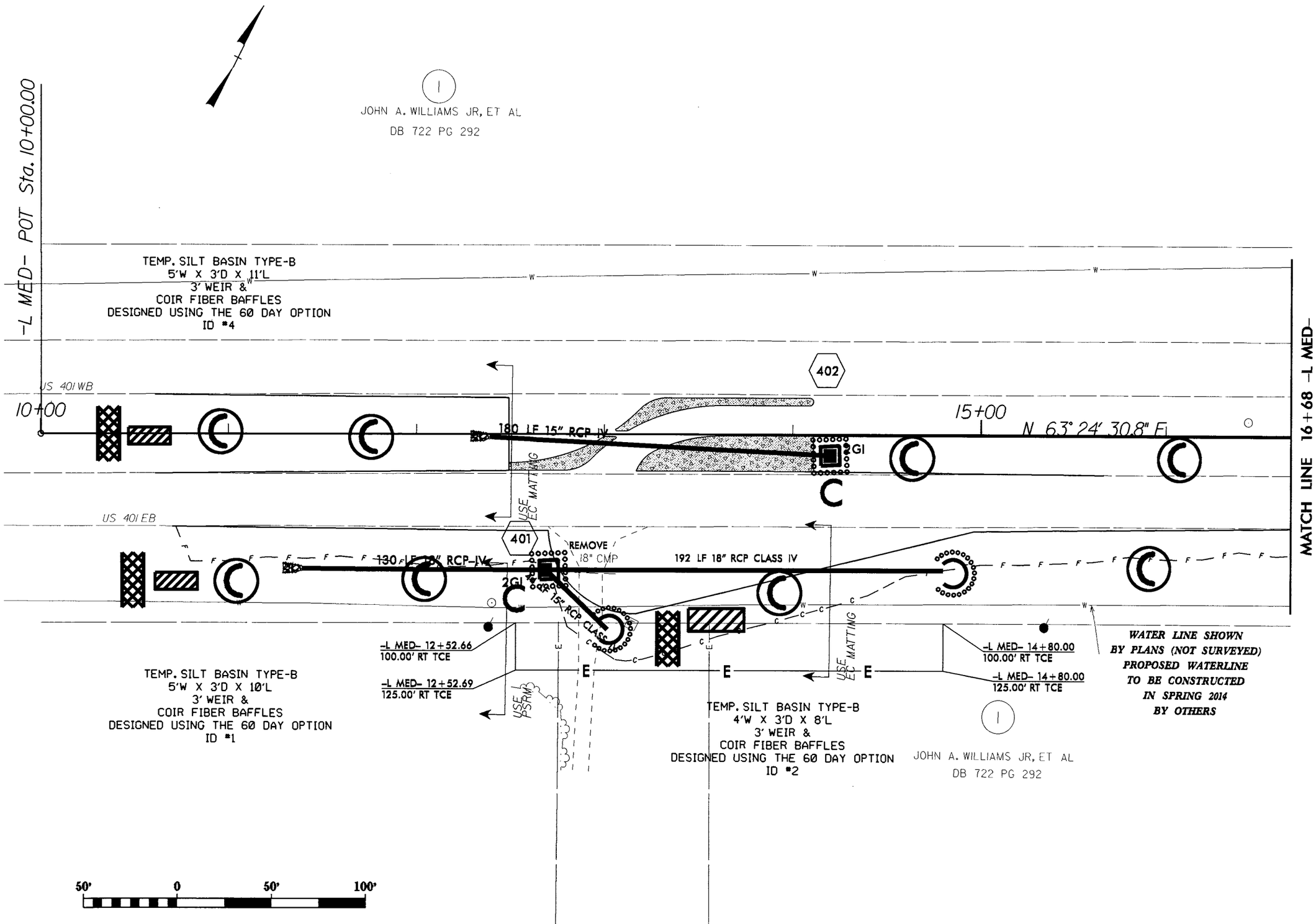

REVISIONS

8/17/99

29-MAY-2014 13:37
C:\div8_projects\rdy\HOKE\US401esr_1304(hobson_rd)\psh\ecp\SS-4908AI_ecp_psh3.dgn

PROJECT REFERENCE NO.	SHEET NO.
SS-4908AI	ECP-4
R/W SHEET NO.	

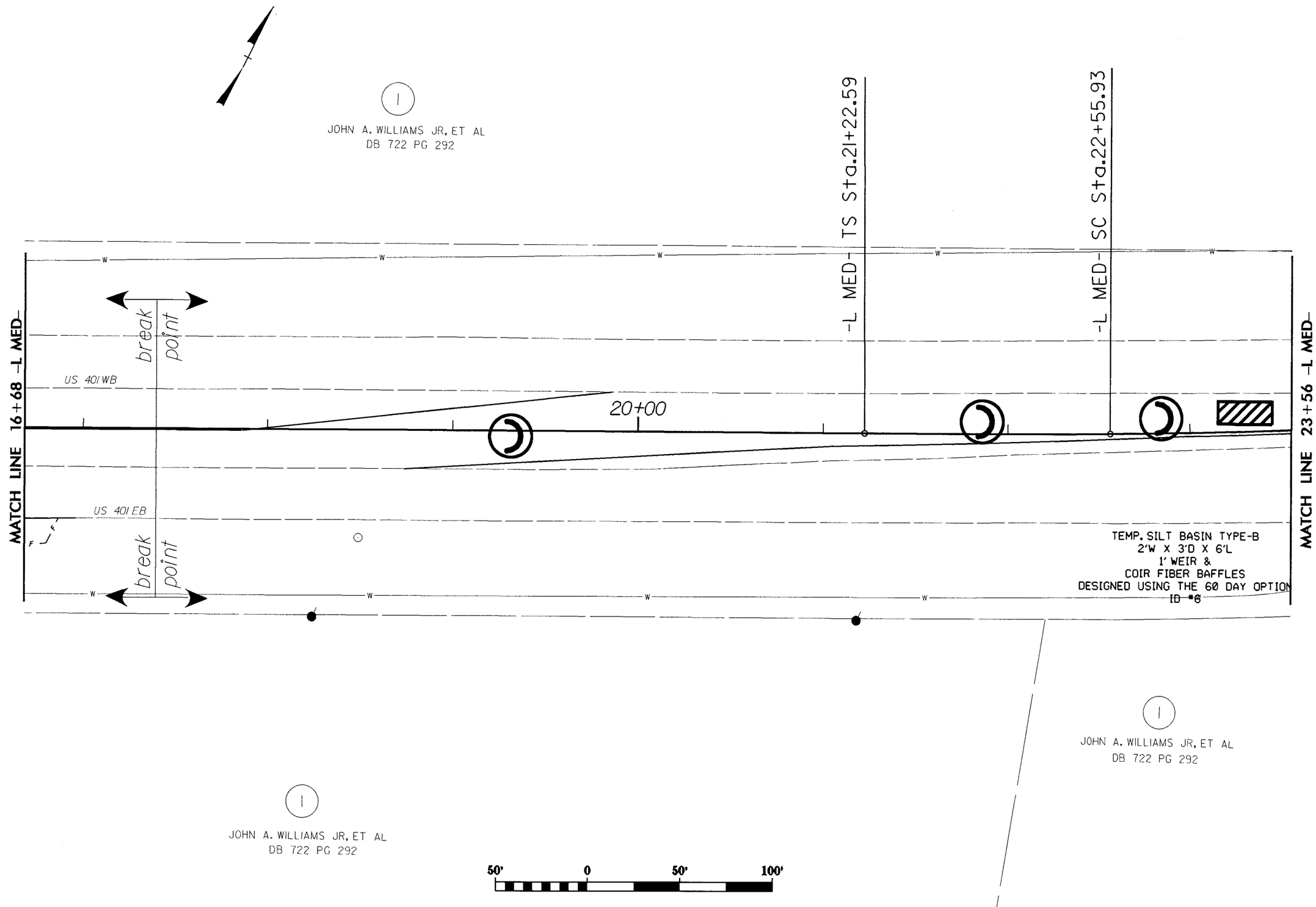

REVISIONS

8/17/99

29-MAY-2014 13:37

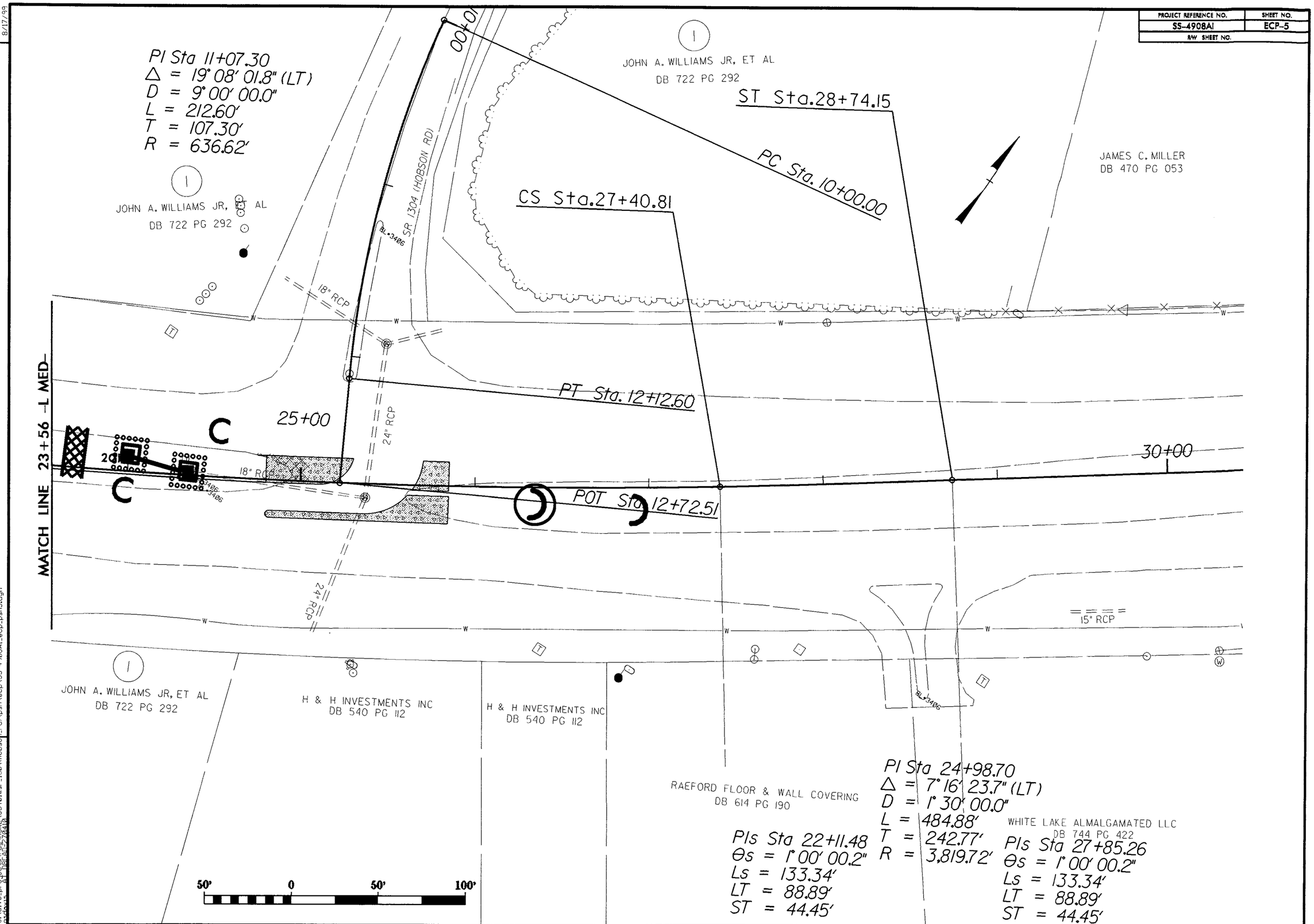
PROJECT REFERENCE NO.
SS-4908AI
SHEET NO.
ECP-5
R/W SHEET NO.
PI Sta 11+07.30
Δ = 19° 08' 01.8" (LT)
D = 9° 00' 00.0"
L = 212.60'
T = 107.30'
R = 636.62'
JOHN A. WILLIAMS JR, ET AL
DB 722 PG 292
JOHN A. WILLIAMS JR, ET AL
DB 722 PG 292
ST Sta.28+74.15
PC Sta. 10+00.00
CS Sta.27+40.81
JAMES C. MILLER
DB 470 PG 053
SR 1304 (HOBSON RD)
18" RCP
24" RCP
PT Sta. 12+12.60
25+00
30+00
POT Sta 12+72.51
MATCH LINE 23+56 -L MED-
15" RCP
JOHN A. WILLIAMS JR, ET AL
DB 722 PG 292
H & H INVESTMENTS INC
DB 540 PG 112
H & H INVESTMENTS INC
DB 540 PG 112
RAEFORD FLOOR & WALL COVERING
DB 614 PG 190
WHITE LAKE ALMALGAMATED LLC
DB 744 PG 422
PI Sta 24+98.70
Δ = 7° 16' 23.7" (LT)
D = 1° 30' 00.0"
L = 484.88'
T = 242.77'
R = 3,819.72'
PIs Sta 22+11.48
Θs = 1° 00' 00.2"
Ls = 133.34'
LT = 88.89'
ST = 44.45'
PIs Sta 27+85.26
Θs = 1° 00' 00.2"
Ls = 133.34'
LT = 88.89'
ST = 44.45'
50' 0 50' 100'
REVISIONS
8/17/99
29-MAY-2014 13:38
C:\div8_projects\rdu\HOKE\US401esr_1304(hobson_rd)\psh\ecp\SS-4908AI_ecp_psh5.dgn

PROJ. REFERENCE NO.	SHEET NO.
SS-4908AI	X-A

STATE OF NORTH CAROLINA
DIVISION OF HIGHWAYS

CROSS-SECTION SUMMARY

NOTE: EMBANKMENT COLUMN DOES NOT INCLUDES BACKFILL FOR UNDERCUT

Station L_Med	Uncl. Exc. (cu. yd.)	Embt (cu. yd.)	Station L_Med	Uncl. Exc. (cu. yd.)	Embt (cu. yd.)
10+00.00	0	0	19+80.00	5	11
10+20.00	0	4	20+00.00	6	9
10+40.00	0	6	20+20.00	6	6
10+60.00	0	6	20+40.00	7	5
10+80.00	1	10	20+60.00	8	4
11+00.00	2	16	20+80.00	8	4
11+20.00	3	13	21+00.00	9	4
11+40.00	3	11	21+20.00	10	3
11+60.00	4	10	21+40.00	10	3
11+80.00	4	10	21+60.00	10	2
12+00.00	4	14	21+80.00	10	3
12+20.00	4	15	22+00.00	10	3
12+40.00	4	16	22+20.00	10	3
12+60.00	6	21	22+40.00	10	3
12+70.00	5	11	22+60.00	11	2
12+80.00	11	11	22+80.00	11	2
13+00.00	50	21	23+00.00	11	2
13+05.79	26	5	23+20.00	11	1
13+11.49	34	6	23+40.00	12	1
13+20.00	50	9	23+60.00	11	1
13+40.00	101	24	23+80.00	10	2
13+60.00	74	27	24+00.00	10	2
13+80.00	53	27	24+20.00	10	3
14+00.00	39	29	24+34.97	6	2
14+09.00	14	14	24+40.00	2	1
14+20.00	15	18	24+60.00	6	2
14+40.00	19	35	24+80.00	3	1
14+60.00	11	36	24+84.82	1	0
14+80.00	8	30			
15+00.00	7	23	**Station**	**Uncl. Exc.**	**Embt**
15+20.00	7	20			
15+40.00	7	18	**L_Med**	**(cu. yd.)**	**(cu. yd.)**
15+60.00	7	17	25+65.47	0	0
15+80.00	7	15	25+80.00	4	0
16+00.00	6	14	26+00.00	3	2
16+20.00	6	14	26+20.00	0	6
16+40.00	6	13	26+40.00	0	6
16+60.00	6	13	26+60.00	1	4
16+80.00	6	15	26+80.00	1	4
17+00.00	5	16	27+00.00	1	4
17+20.00	4	17			
17+40.00	4	17			
17+60.00	4	16			
17+80.00	4	17			
18+00.00	4	19			
18+20.00	4	18			
18+40.00	4	17			
18+60.00	4	16			
18+80.00	4	16			
19+00.00	5	16			
19+20.00	6	15			
19+40.00	6	13			
19+60.00	6	12			

Approximate quantities only. Unclassified excavation, borrow excavation, fine grading, clearing and grubbing, silt excavation, and removal of existing pavement will be paid for at the lump sum price for "Grading".

NOTE:
Shoulder Material included in Embankment quantities listed

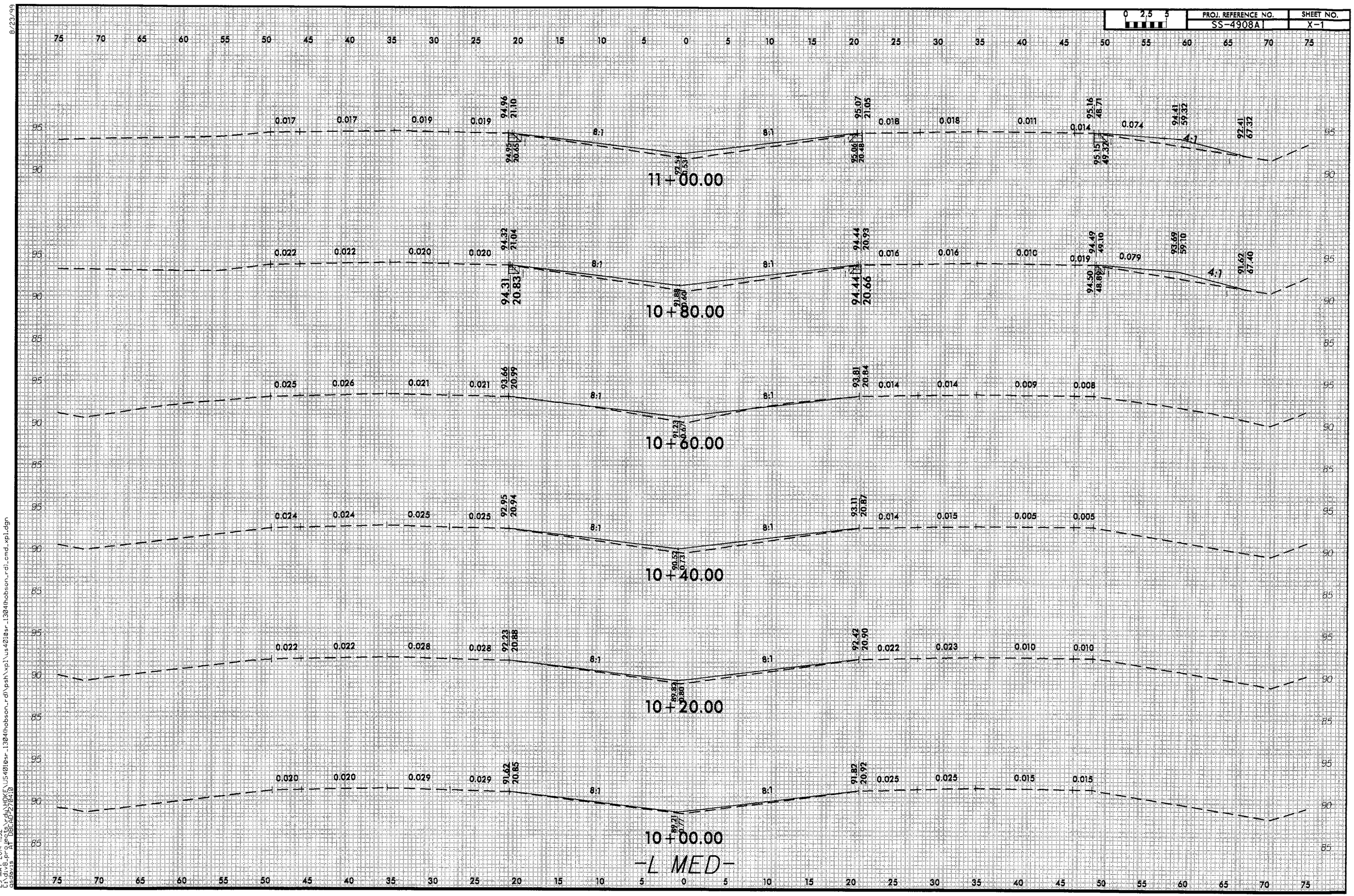

8/23/99

29-MAY-2014 11:32
C:\div8_projects\rdy\HOKE\US4010sr_1304(hobson_rd)\psh\xpl\us4010sr_1304(hobson_rd)_cmd_xpl.dgn
gsdevis AT DBCAD-270410

0 2.5 5

PROJ. REFERENCE NO.	SHEET NO.
SS-4908A1	X-2

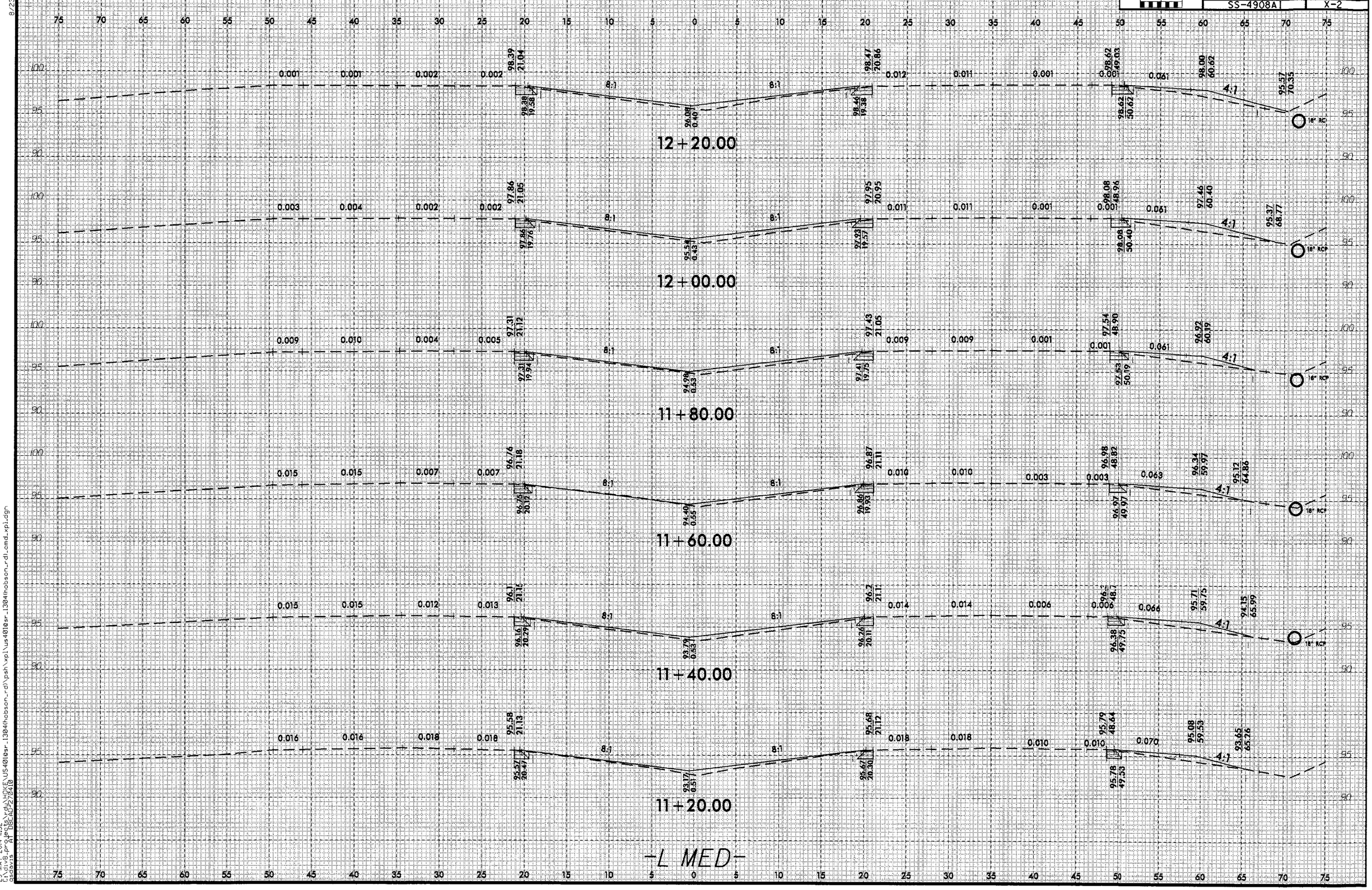

25-MAY-2014 11:32
C:\Users\rdavis\DOCUMENTS\US4010sr_1304(hobson_rd)\psh\xpl\us4010sr_1304(hobson_rd)_cmd_xpl.dgn
davis
$$$$ICAD_PRO_A_DEC_ACAD_27.dfl

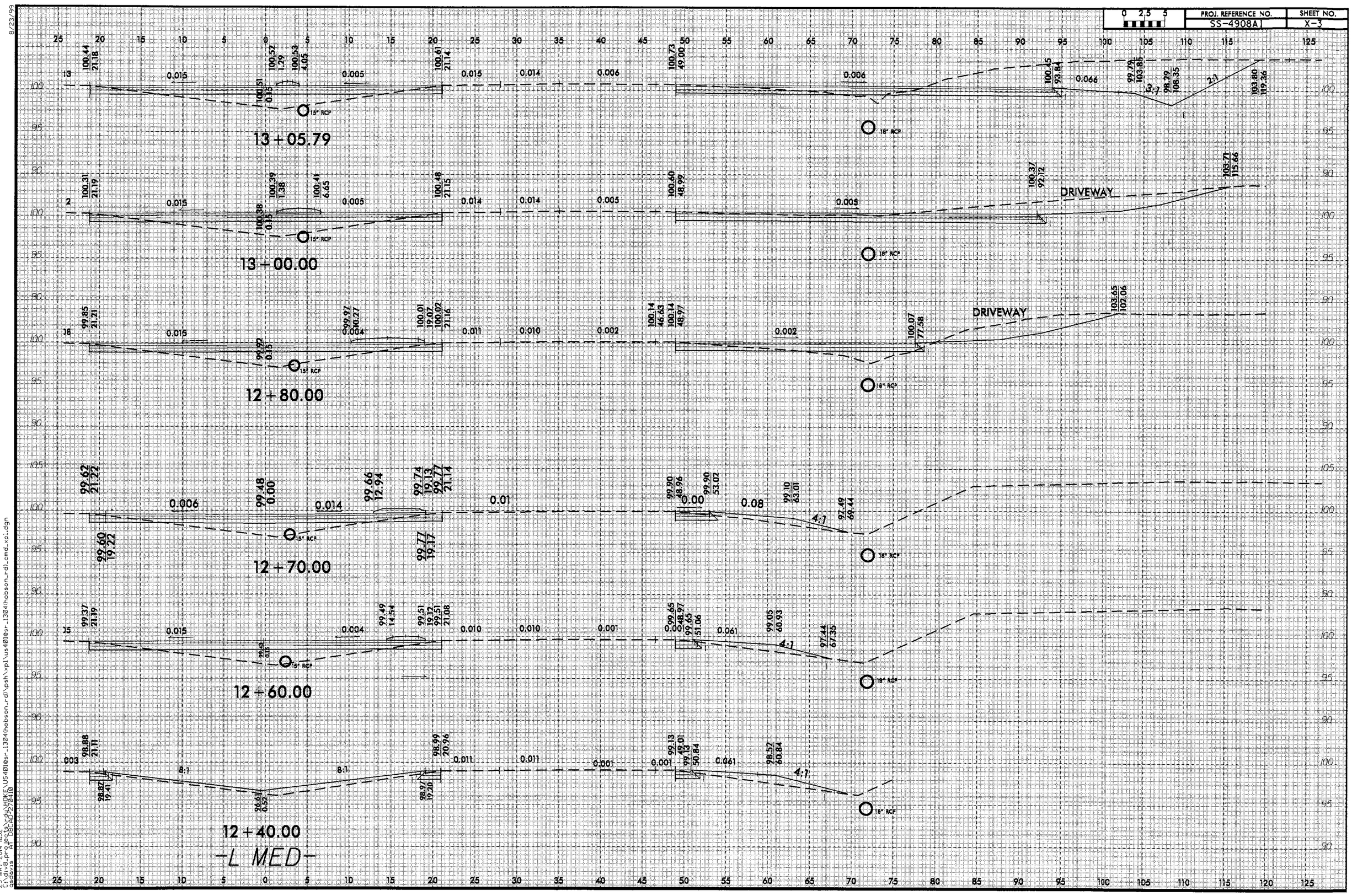

8/23/99

29-MAY-2014 11:32
C:\div8_projects\rdy\HOKE\US401@sr_1304(hobson_rd)\psh\xpl\us401@sr_1304(hobson_rd)_cmd_xpl.dgn
gsdavis AT D8CAD-270410

8/23/99

0 2.5 5	PROJ. REFERENCE NO.	SHEET NO.
	SS-4908A1	X-4

25 20 15 10 5 0 5 10 15 20 25 30 35 40 45 50 55 60 65 70 75 80 85 90 95 100 105 110 115 120 125

105 100 95 90

14+00.00

012 | 0.012 | 0.012 | 0.002 | 0.014 | 0.014 | 0.012 | 0.011 | 0.071 | 3:1 | 2:1

102.35 21.02 102.35 19.23 | 102.36 16.23 | 102.36 0.77 | 102.39 19.57 | 102.39 21.09 | 15" RCP | 102.43 48.89 | 102.13 74.63 | 16" RCP | 101.42 84.63 | 99.92 89.32 | 103.43 96.55

13+80.00

018 | 0.015 | 0.004 | 0.011 | 0.011 | 0.007 | 0.007 | 0.067 | 3:1 | 2:1

101.92 21.13 101.93 19.23 | 101.94 15.23 | 102.00 0.77 | 102.08 19.55 | 102.09 21.11 | 15" RCP | 102.15 48.79 | 101.94 79.51 | 16" RCP | 101.28 89.51 | 99.78 94.01 | 103.69 101.83

13+60.00

020 | 0.016 | 0.006 | 0.013 | 0.013 | 0.007 | 0.007 | 0.067 | 3:1 | 2:1

101.52 21.19 101.52 19.23 | 101.54 15.20 | 101.61 0.80 | 101.71 19.54 | 101.72 21.12 | 15" RCP | 101.80 48.85 | 101.55 84.40 | 18" RCP | 100.91 93.90 | 99.41 98.39 | 103.74 107.05

13+40.00

018 | 0.016 | 0.006 | 0.015 | 0.015 | 0.008 | 0.008 | 0.068 | 3:1 | 2:1

101.14 21.18 101.15 19.23 | 101.17 12.68 | 101.25 3.82 | 101.34 19.53 | 101.34 21.17 | 15" RCP | 101.44 48.94 | 101.10 89.28 | 18" RCP | 100.42 99.28 | 98.92 103.77 | 103.76 113.45

13+20.00

017 | 0.015 | 0.005 | 0.017 | 0.017 | 0.008 | 0.008 | 0.068 | 3:1 | 2:1

100.76 21.17 | 100.78 14.18 | 100.81 5.78 | 100.91 14.12 | 100.93 19.52 | 100.94 21.13 | 15" RCP | 101.06 49.01 | 100.69 94.16 | 18" RCP | 100.00 104.16 | 98.50 108.65 | 103.78 119.20

13+11.49

015 | 0.015 | 0.005 | 0.016 | 0.015 | 0.007 | 0.007 | 0.067 | 3:1 | 2:1

100.57 21.17 | 100.62 6.63 | 100.64 1.78 | 100.74 21.14 | 15" RCP | 100.87 49.00 | 100.54 94.71 | 18" RCP | 99.87 104.71 | 98.37 109.27 | 103.77 120.04

-L MED-

29-MAY-2014 11:32
C:\dgn_files\rdlMDOT\US401sr_1304(hobson_rd)\psh\xpl\us401sr_1304(hobson_rd_ond_xpl.dgn
$$$$USER
$$$$PLOTDATE
$$$$CADD

8/23/99

0 2.5 5	PROJ. REFERENCE NO.	SHEET NO.
	SS-4908A1	X-5

55 50 45 40 35 30 25 20 15 10 5 0 5 10 15 20 25 30 35 40 45 50 55 60 65 70 75 80 85 90 95

105 100 95

0.014 0.013 0.023 0.022 0.019 0.019 0.016 0.076

103.74 20.93 | 103.24 0.77 | 102.32 8.91 | 103.75 20.98 | 103.75 20.41 | 103.81 18.84 | 103.77 51.09 | 103.02 61.09 | 101.10 68.75

8:1 8:1 4:1

15+00.00

0.015 0.014 0.014 0.013 0.022 0.022 0.018 0.017 0.077

103.60 20.95 | 103.17 0.77 | 102.24 9.80 | 103.50 21.01 | 103.49 20.72 | 103.57 48.93 | 103.47 52.10 | 102.69 65.10 | 100.48 71.79

8:1 8:1 3:1 18" RCP

14+80.00

0.017 0.016 0.006 0.006 0.021 0.021 0.015 0.015 0.075

103.42 20.97 | 103.29 0.77 | 102.10 10.65 | 103.25 21.03 | 103.23 20.03 | 103.32 48.93 | 103.15 59.98 | 102.40 69.98

8:1 8:1 4:1 18" RCP

14+60.00

0.018 0.017 0.006 0.006 0.019 0.019 0.013 0.013 0.073

103.10 20.94 | 102.96 0.77 | 101.82 10.29 | 102.99 21.05 | 102.96 19.85 | 103.08 48.94 | 102.86 64.87 | 102.13 74.87 | 103.55 85.19 | 100.63 79.36

8:1 8:1 3:1 2:1 18" RCP

14+40.00

0.019 0.019 0.007 0.007 0.017 0.017 0.016 0.016 0.076

102.78 20.92 | 102.64 0.77 | 101.52 10.05 | 102.70 21.07 | 102.68 19.66 | 102.71 48.99 | 102.37 69.79 | 101.61 79.75 | 103.58 91.17 | 100.11 84.24

8:1 8:1 3:1 2:1 15" RCP 16" RCP

14+20.00

0.018 0.018 0.009 0.010 0.011 0.000 0.015 0.015 0.014 0.074

102.55 20.97 | 102.35 19.10 | 102.54 18.37 | 102.52 0.77 | 102.53 19.57 | 102.55 48.93 | 102.23 72.43 | 101.49 82.43 | 103.62 94.17 | 99.98 86.93

3:1 2:1 15" RCP 18" RCP

14+09.00

-L MED-

23-MAY-2014 11:32
C:\Projects\Hydro\HOKE\US401\sr_1304\hobson_rdl\psh\xpl\us401_sr_1304_hobson_rdl_cmd_xpl.dgn
cadvp
$$$$DATE$$$$27041@

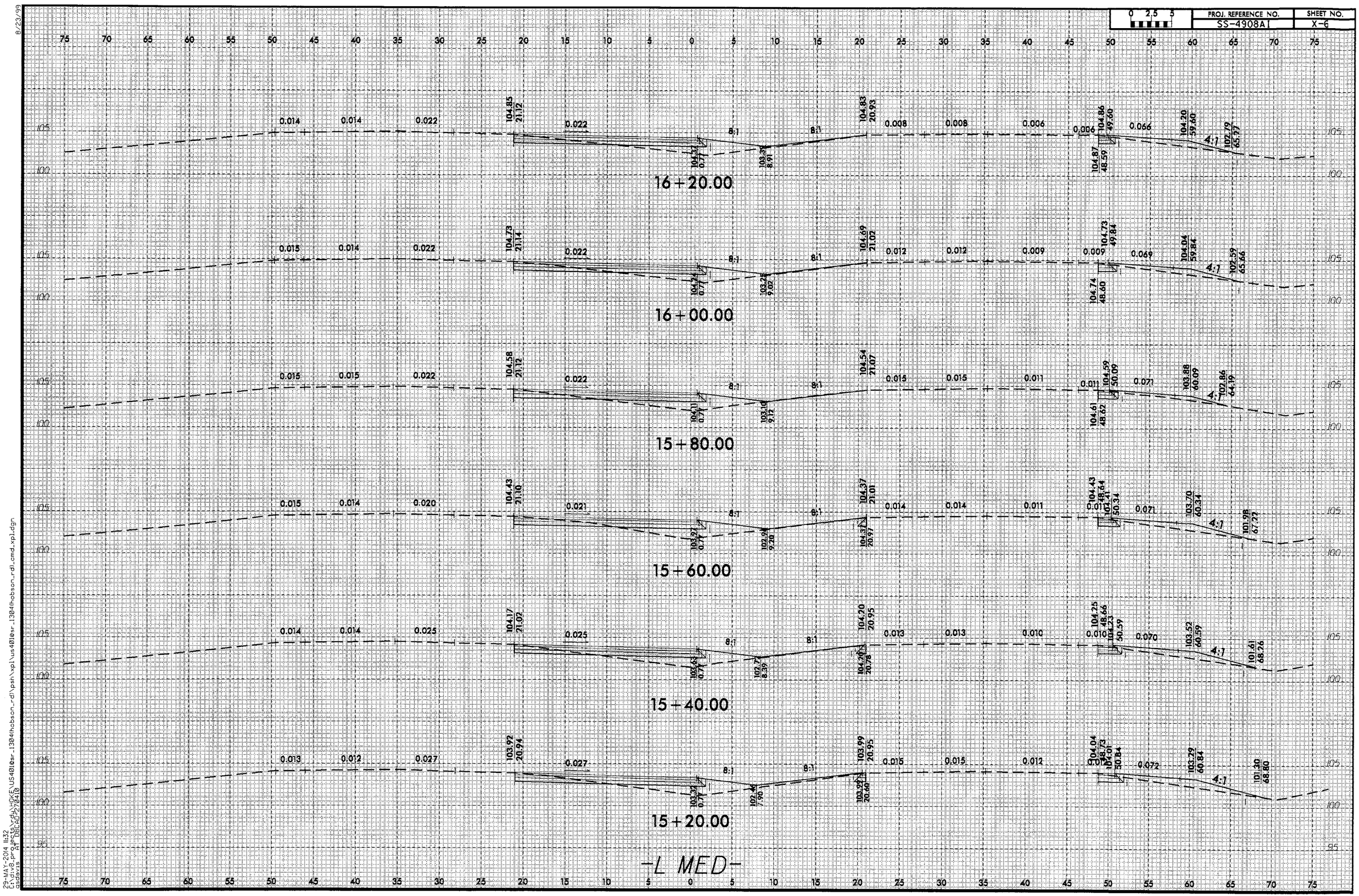

8/23/99

29-MAY-2014 11:32
C:\div8_projects\rdy\HOKE\US401@sr_1304(hobson_rd)\psh\xpl\us401@sr_1304(hobson_rd)_cmd_xpl.dgn
asdevis AT DBCAD-270410

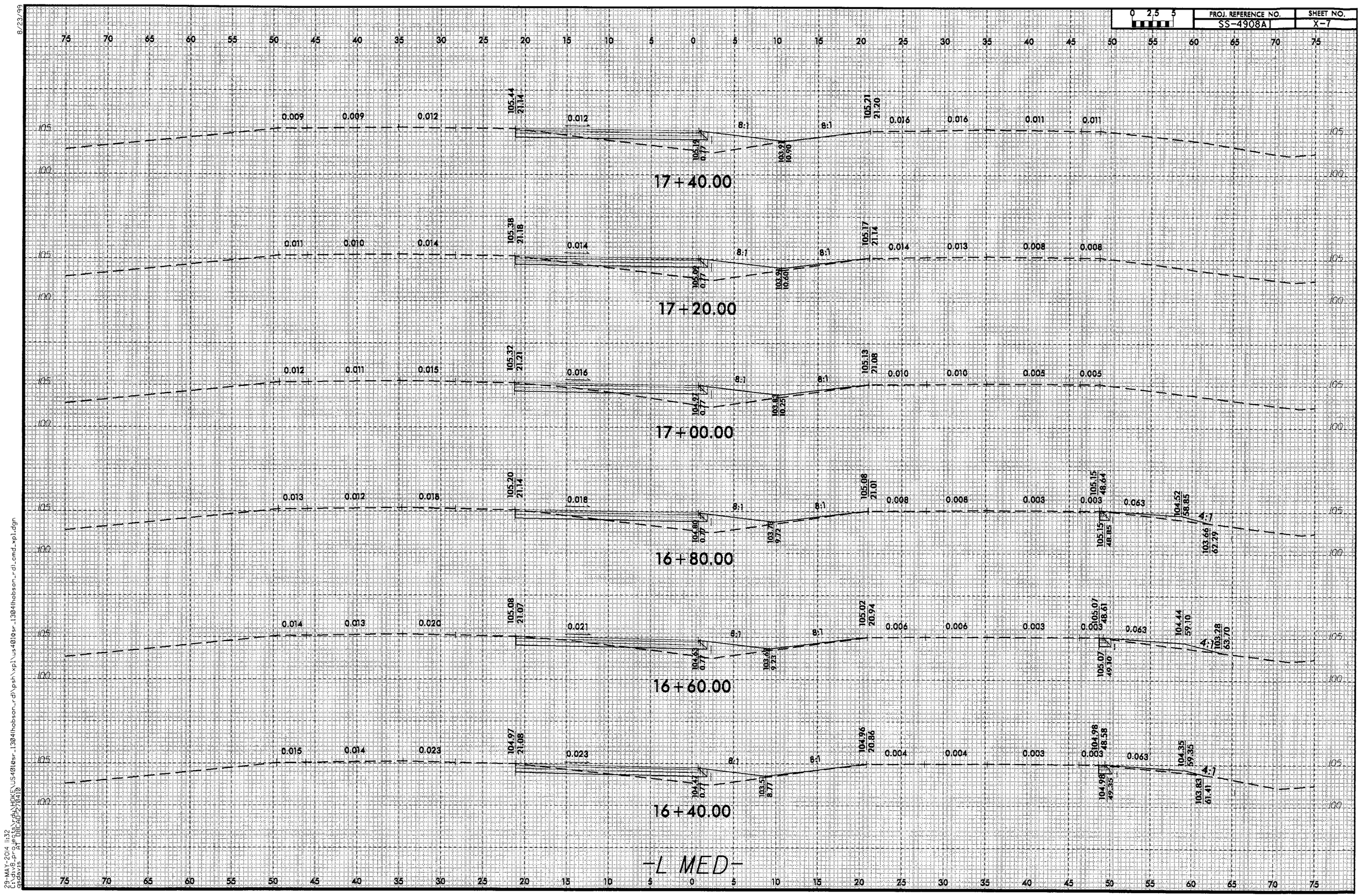

8/23/99

29-MAY-2014 11:32
C:\div8_projects\rdy\HOKE\US401@sr_1304(hobson_rd)\psh\xpl\us401@sr_1304(hobson_rd)_cmd_xpl.dgn
qsdavis AT DBCAD-270410

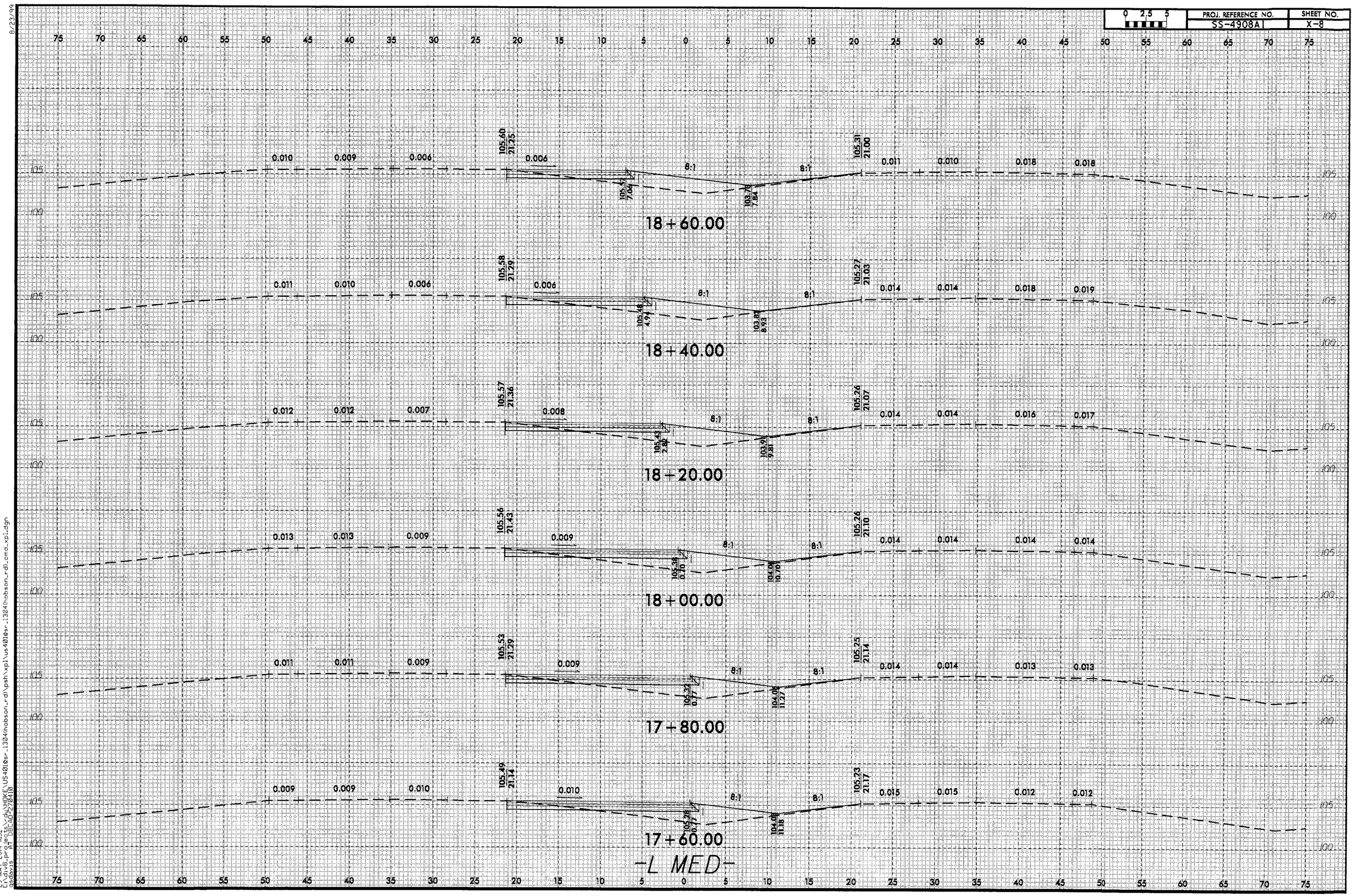

8/23/99

29-MAY-2014 11:32
C:\div8_projects\rdy\HOKE\US4010sr_1304(hobson_rd)\psh\xpl\us4010sr_1304(hobson_rd)_cmd_xpl.dgn
gsdavis AT DBCAD-270410

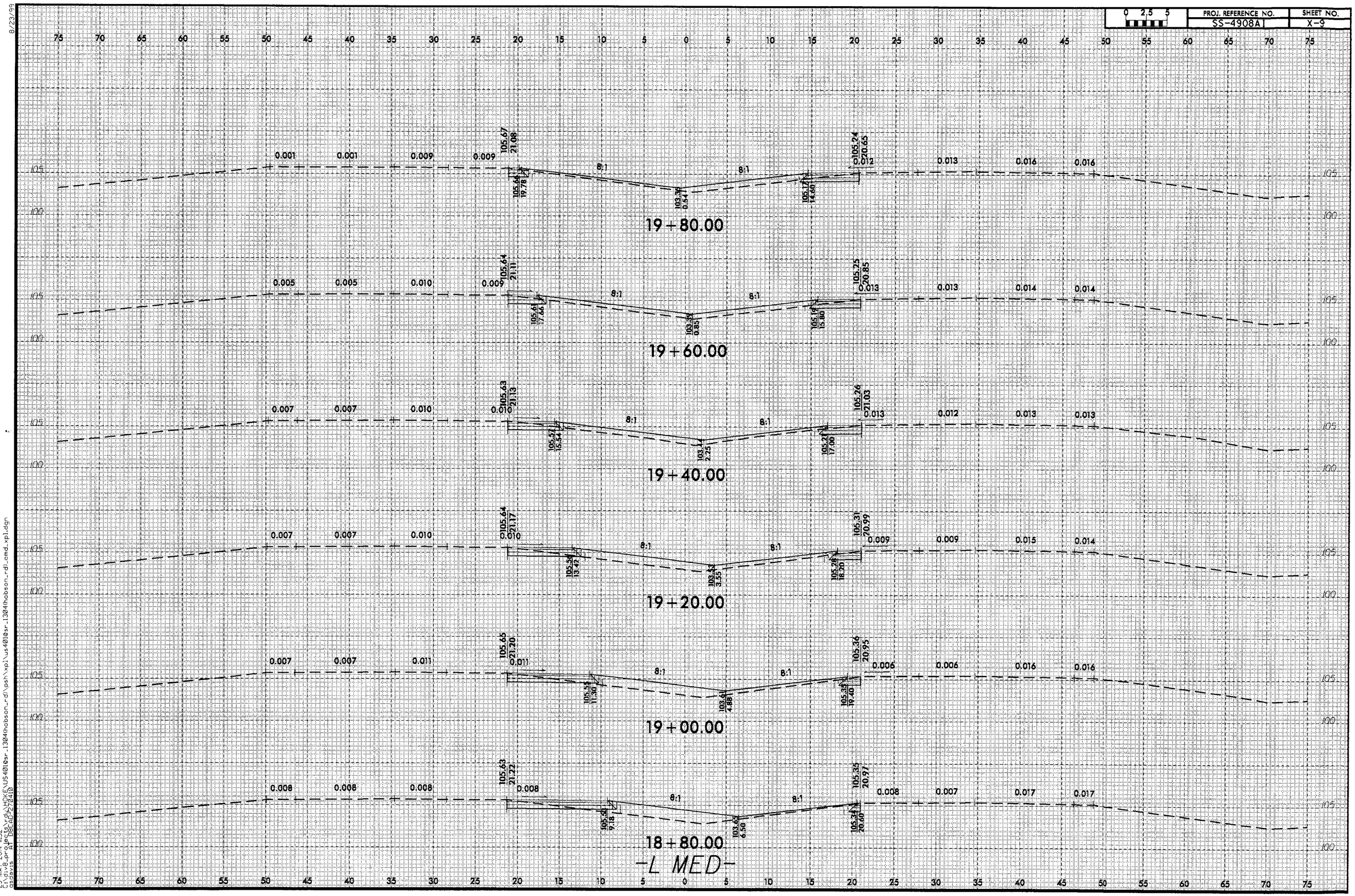

8/23/99

29-MAY-2014 11:32
C:\dlv8_projects\rdy\HOKE\US401@sr_1304(hobson_rd)\psh\xpl\us401@sr_1304(hobson_rd)_cmd.xpl.dgn

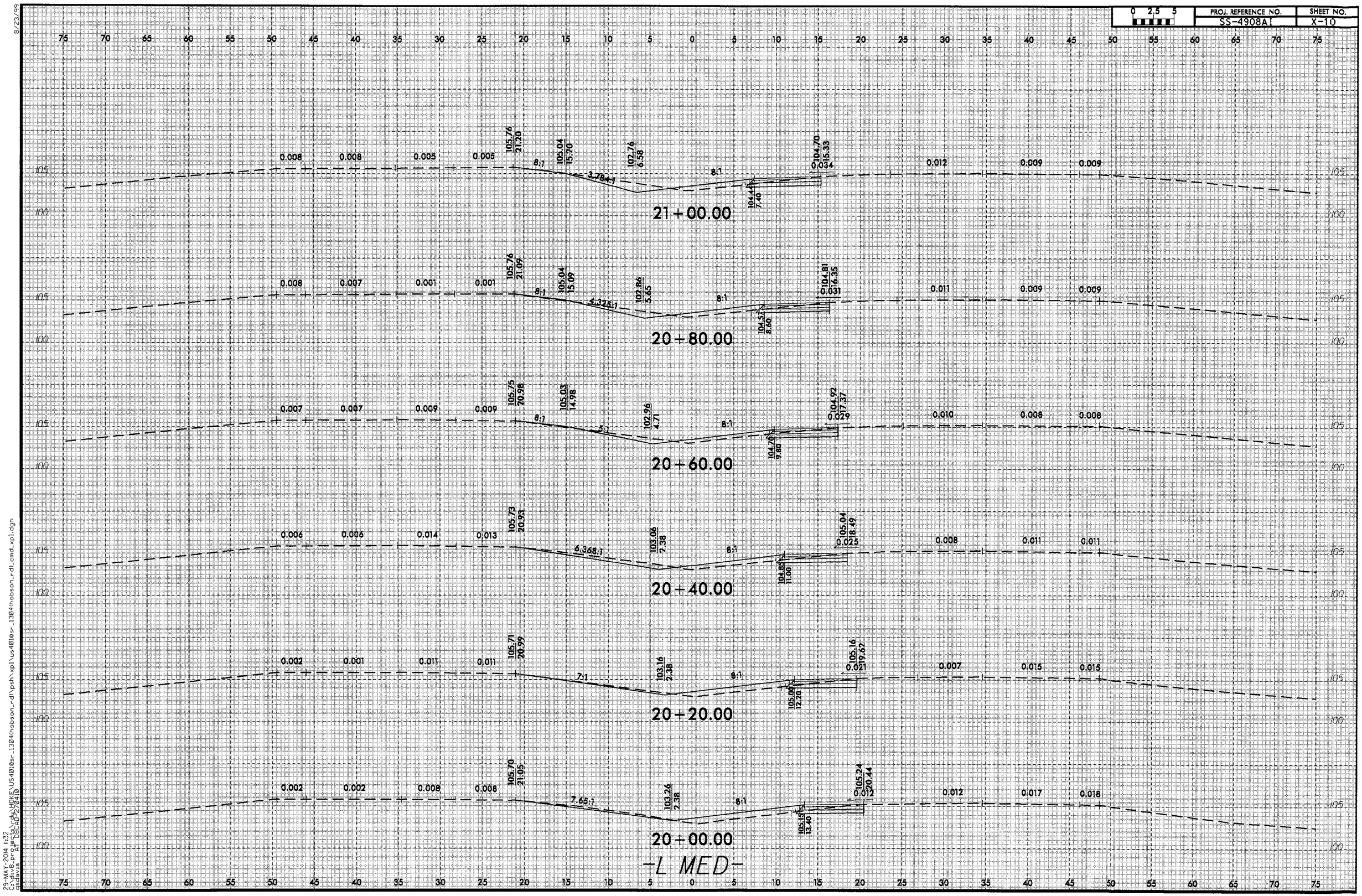

8/23/99

29-MAY-2014 11:32
C:\div8_projects\rdy\HOKE\US4010sr_1304(hobson_rd)\psh\xpl\us4010sr_1304(hobson_rd)_cmd_xpl.dgn
gsdavis AT DBCAD-270410

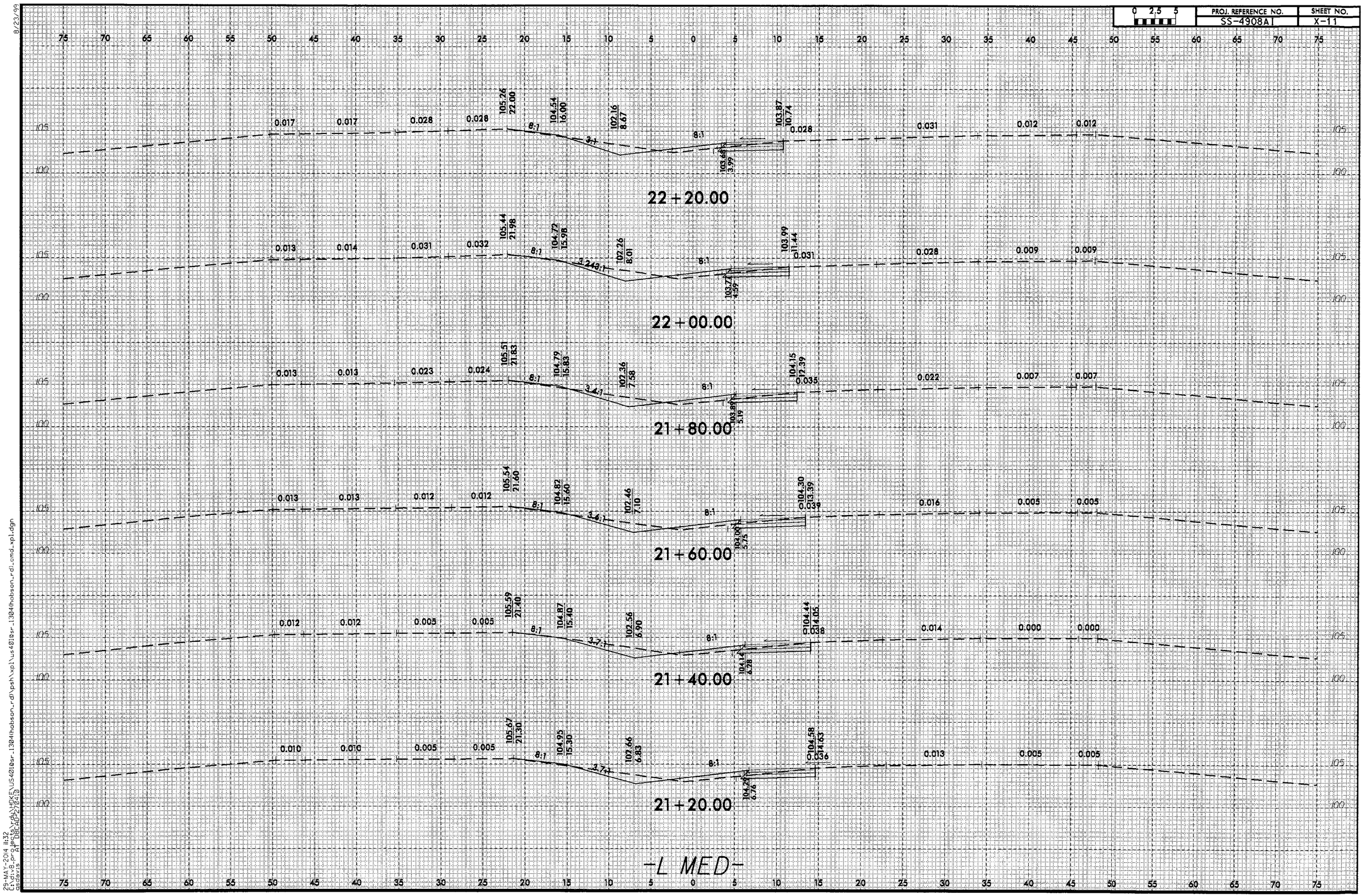

8/23/99
29-MAY-2014 11:32
C:\div8_projects\rdy\HOKE\US4010sr_1304(hobson_rd)\psh\xpl\us4010sr_1304(hobson_rd)_cmd_xpl.dgn
asdevis AT DBCAD-270410

8/23/99

0 2.5 5	PROJ. REFERENCE NO.	SHEET NO.
	SS-4908A	X-12

75 70 65 60 55 50 45 40 35 30 25 20 15 10 5 0 5 10 15 20 25 30 35 40 45 50 55 60 65 70 75

105 100 95

0.028 0.028 0.043 0.043 104.25 20.37 4.23:1 101.64 9.31 8:1 103.08 9.05 0.016 0.041 0.033 0.033

102.97 1.75

23+40.00

0.027 0.028 0.043 0.042 104.47 20.83 8:1 103.99 16.83 3:1 101.69 9.89 8:1 103.22 9.17 0.017 0.041 0.029 0.030

103.10 1.81

23+20.00

0.025 0.025 0.045 0.044 104.68 21.19 8:1 104.20 17.19 8:1 101.76 10.47 8:1 103.37 9.34 0.018 0.039 0.027 0.027

103.24 1.88

23+00.00

0.023 0.023 0.039 0.040 104.83 21.53 8:1 104.35 17.53 3:1 101.86 10.44 8:1 103.53 9.60 0.020 0.035 0.024 0.024

103.38 2.31

22+80.00

0.022 0.022 0.030 0.031 104.95 21.79 8:1 104.47 17.79 3:1 101.96 10.24 8:1 103.68 9.94 0.021 0.031 0.022 0.021

103.53 2.84

22+60.00

0.020 0.021 0.024 0.025 105.08 21.95 8:1 104.48 16.95 3:1 102.06 9.48 8:1 103.78 10.30 0.024 0.031 0.017 0.017

103.61 3.40

22+40.00

-L MED-

75 70 65 60 55 50 45 40 35 30 25 20 15 10 5 0 5 10 15 20 25 30 35 40 45 50 55 60 65 70 75

29-MAY-2014 11:33
C:\Projects\dv\HOKE\US401\sr_1304\hobson_rdl\pch\xpl\us401sr_1304hobson_rdl_cmd_xpl.dgn
$USER_NAME
$DGNFILE
$DGNDB
$DGNDB_SEED_FILE
$DGNDB_SEED_SEED_NAME
$DGNDB_SEED_SEED_DESCRIPTION
$DGNDB_SEED_SEED_TYPE
$DGNDB_SEED_SEED_APPLICATION
$DGNDB_SEED_SEED_APP_VERSION
$DGNDB_SEED_SEED_CREATE_DATE
$DGNDB_SEED_SEED_MODIFY_DATE
$DGNDB_SEED_SEED_DGNDB_VERSION
$DGNDB_SEED_SEED_DGNDB_SUB_VERSION
$DGNDB_SEED_SEED_DGNDB_BUILD_NUMBER
$DGNDB_SEED_SEED_DGNDB_BUILD_SUB_NUMBER
$DGNDB_SEED_SEED_DGNDB_CREATE_DATE
$DGNDB_SEED_SEED_DGNDB_MODIFY_DATE
$DGNDB_SEED_SEED_DGNDB_GUID
$DGNDB_SEED_SEED_DGNDB_PROFILE_VERSION
$DGNDB_SEED_SEED_DGNDB_PROFILE_SUB_VERSION
$DGNDB_SEED_SEED_DGNDB_PROFILE_BUILD_NUMBER
$DGNDB_SEED_SEED_DGNDB_PROFILE_BUILD_SUB_NUMBER
$DGNDB_SEED_SEED_DGNDB_PROFILE_CREATE_DATE
$DGNDB_SEED_SEED_DGNDB_PROFILE_MODIFY_DATE
$DGNDB_SEED_SEED_DGNDB_PROFILE_GUID
$DGNDB_SEED_SEED_DGNDB_PROFILE_NAME
$DGNDB_SEED_SEED_DGNDB_PROFILE_DESCRIPTION
$DGNDB_SEED_SEED_DGNDB_PROFILE_VENDOR
$DGNDB_SEED_SEED_DGNDB_PROFILE_VENDOR_URL
$DGNDB_SEED_SEED_DGNDB_PROFILE_VENDOR_EMAIL
$DGNDB_SEED_SEED_DGNDB_PROFILE_VENDOR_PHONE
$DGNDB_SEED_SEED_DGNDB_PROFILE_VENDOR_ADDRESS
$DGNDB_SEED_SEED_DGNDB_PROFILE_VENDOR_CITY
$DGNDB_SEED_SEED_DGNDB_PROFILE_VENDOR_STATE
$DGNDB_SEED_SEED_DGNDB_PROFILE_VENDOR_ZIP
$DGNDB_SEED_SEED_DGNDB_PROFILE_VENDOR_COUNTRY
$DGNDB_SEED_SEED_DGNDB_PROFILE_VENDOR_FAX
$DGNDB_SEED_SEED_DGNDB_PROFILE_VENDOR_CONTACT
$DGNDB_SEED_SEED_DGNDB_PROFILE_VENDOR_CONTACT_EMAIL
$DGNDB_SEED_SEED_DGNDB_PROFILE_VENDOR_CONTACT_PHONE
$DGNDB_SEED_SEED_DGNDB_PROFILE_VENDOR_CONTACT_ADDRESS
$DGNDB_SEED_SEED_DGNDB_PROFILE_VENDOR_CONTACT_CITY
$DGNDB_SEED_SEED_DGNDB_PROFILE_VENDOR_CONTACT_STATE
$DGNDB_SEED_SEED_DGNDB_PROFILE_VENDOR_CONTACT_ZIP
$DGNDB_SEED_SEED_DGNDB_PROFILE_VENDOR_CONTACT_COUNTRY
$DGNDB_SEED_SEED_DGNDB_PROFILE_VENDOR_CONTACT_FAX
$DGNDB_SEED_SEED_DGNDB_PROFILE_VENDOR_CONTACT_TITLE
$DGNDB_SEED_SEED_DGNDB_PROFILE_VENDOR_CONTACT_DEPARTMENT
$DGNDB_SEED_SEED_DGNDB_PROFILE_VENDOR_CONTACT_COMPANY
$DGNDB_SEED_SEED_DGNDB_PROFILE_VENDOR_CONTACT_NOTES
$DGNDB_SEED_SEED_DGNDB_PROFILE_VENDOR_CONTACT_CUSTOM_1
$DGNDB_SEED_SEED_DGNDB_PROFILE_VENDOR_CONTACT_CUSTOM_2
$DGNDB_SEED_SEED_DGNDB_PROFILE_VENDOR_CONTACT_CUSTOM_3
$DGNDB_SEED_SEED_DGNDB_PROFILE_VENDOR_CONTACT_CUSTOM_4
$DGNDB_SEED_SEED_DGNDB_PROFILE_VENDOR_CONTACT_CUSTOM_5
$DGNDB_SEED_SEED_DGNDB_PROFILE_VENDOR_CONTACT_CUSTOM_6
$DGNDB_SEED_SEED_DGNDB_PROFILE_VENDOR_CONTACT_CUSTOM_7
$DGNDB_SEED_SEED_DGNDB_PROFILE_VENDOR_CONTACT_CUSTOM_8
$DGNDB_SEED_SEED_DGNDB_PROFILE_VENDOR_CONTACT_CUSTOM_9
$DGNDB_SEED_SEED_DGNDB_PROFILE_VENDOR_CONTACT_CUSTOM_10
$DGNDB_SEED_SEED_DGNDB_PROFILE_VENDOR_CONTACT_CUSTOM_11
$DGNDB_SEED_SEED_DGNDB_PROFILE_VENDOR_CONTACT_CUSTOM_12
$DGNDB_SEED_SEED_DGNDB_PROFILE_VENDOR_CONTACT_CUSTOM_13
$DGNDB_SEED_SEED_DGNDB_PROFILE_VENDOR_CONTACT_CUSTOM_14
$DGNDB_SEED_SEED_DGNDB_PROFILE_VENDOR_CONTACT_CUSTOM_15
$DGNDB_SEED_SEED_DGNDB_PROFILE_VENDOR_CONTACT_CUSTOM_16
$DGNDB_SEED_SEED_DGNDB_PROFILE_VENDOR_CONTACT_CUSTOM_17
$DGNDB_SEED_SEED_DGNDB_PROFILE_VENDOR_CONTACT_CUSTOM_18
$DGNDB_SEED_SEED_DGNDB_PROFILE_VENDOR_CONTACT_CUSTOM_19
$DGNDB_SEED_SEED_DGNDB_PROFILE_VENDOR_CONTACT_CUSTOM_20
$DGNDB_SEED_SEED_DGNDB_PROFILE_VENDOR_CONTACT_CUSTOM_21
$DGNDB_SEED_SEED_DGNDB_PROFILE_VENDOR_CONTACT_CUSTOM_22
$DGNDB_SEED_SEED_DGNDB_PROFILE_VENDOR_CONTACT_CUSTOM_23
$DGNDB_SEED_SEED_DGNDB_PROFILE_VENDOR_CONTACT_CUSTOM_24
$DGNDB_SEED_SEED_DGNDB_PROFILE_VENDOR_CONTACT_CUSTOM_25
$DGNDB_SEED_SEED_DGNDB_PROFILE_VENDOR_CONTACT_CUSTOM_26
$DGNDB_SEED_SEED_DGNDB_PROFILE_VENDOR_CONTACT_CUSTOM_27
$DGNDB_SEED_SEED_DGNDB_PROFILE_VENDOR_CONTACT_CUSTOM_28
$DGNDB_SEED_SEED_DGNDB_PROFILE_VENDOR_CONTACT_CUSTOM_29
$DGNDB_SEED_SEED_DGNDB_PROFILE_VENDOR_CONTACT_CUSTOM_30
$DGNDB_SEED_SEED_DGNDB_PROFILE_VENDOR_CONTACT_CUSTOM_31
$DGNDB_SEED_SEED_DGNDB_PROFILE_VENDOR_CONTACT_CUSTOM_32
$DGNDB_SEED_SEED_DGNDB_PROFILE_VENDOR_CONTACT_CUSTOM_33
$DGNDB_SEED_SEED_DGNDB_PROFILE_VENDOR_CONTACT_CUSTOM_34
$DGNDB_SEED_SEED_DGNDB_PROFILE_VENDOR_CONTACT_CUSTOM_35
$DGNDB_SEED_SEED_DGNDB_PROFILE_VENDOR_CONTACT_CUSTOM_36
$DGNDB_SEED_SEED_DGNDB_PROFILE_VENDOR_CONTACT_CUSTOM_37
$DGNDB_SEED_SEED_DGNDB_PROFILE_VENDOR_CONTACT_CUSTOM_38
$DGNDB_SEED_SEED_DGNDB_PROFILE_VENDOR_CONTACT_CUSTOM_39
$DGNDB_SEED_SEED_DGNDB_PROFILE_VENDOR_CONTACT_CUSTOM_40
$DGNDB_SEED_SEED_DGNDB_PROFILE_VENDOR_CONTACT_CUSTOM_41
$DGNDB_SEED_SEED_DGNDB_PROFILE_VENDOR_CONTACT_CUSTOM_42
$DGNDB_SEED_SEED_DGNDB_PROFILE_VENDOR_CONTACT_CUSTOM_43
$DGNDB_SEED_SEED_DGNDB_PROFILE_VENDOR_CONTACT_CUSTOM_44
$DGNDB_SEED_SEED_DGNDB_PROFILE_VENDOR_CONTACT_CUSTOM_45
$DGNDB_SEED_SEED_DGNDB_PROFILE_VENDOR_CONTACT_CUSTOM_46
$DGNDB_SEED_SEED_DGNDB_PROFILE_VENDOR_CONTACT_CUSTOM_47
$DGNDB_SEED_SEED_DGNDB_PROFILE_VENDOR_CONTACT_CUSTOM_48
$DGNDB_SEED_SEED_DGNDB_PROFILE_VENDOR_CONTACT_CUSTOM_49
$DGNDB_SEED_SEED_DGNDB_PROFILE_VENDOR_CONTACT_CUSTOM_50
$DGNDB_SEED_SEED_DGNDB_PROFILE_VENDOR_CONTACT_CUSTOM_51
$DGNDB_SEED_SEED_DGNDB_PROFILE_VENDOR_CONTACT_CUSTOM_52
$DGNDB_SEED_SEED_DGNDB_PROFILE_VENDOR_CONTACT_CUSTOM_53
$DGNDB_SEED_SEED_DGNDB_PROFILE_VENDOR_CONTACT_CUSTOM_54
$DGNDB_SEED_SEED_DGNDB_PROFILE_VENDOR_CONTACT_CUSTOM_55
$DGNDB_SEED_SEED_DGNDB_PROFILE_VENDOR_CONTACT_CUSTOM_56
$DGNDB_SEED_SEED_DGNDB_PROFILE_VENDOR_CONTACT_CUSTOM_57
$DGNDB_SEED_SEED_DGNDB_PROFILE_VENDOR_CONTACT_CUSTOM_58
$DGNDB_SEED_SEED_DGNDB_PROFILE_VENDOR_CONTACT_CUSTOM_59
$DGNDB_SEED_SEED_DGNDB_PROFILE_VENDOR_CONTACT_CUSTOM_60
$DGNDB_SEED_SEED_DGNDB_PROFILE_VENDOR_CONTACT_CUSTOM_61
$DGNDB_SEED_SEED_DGNDB_PROFILE_VENDOR_CONTACT_CUSTOM_62
$DGNDB_SEED_SEED_DGNDB_PROFILE_VENDOR_CONTACT_CUSTOM_63
$DGNDB_SEED_SEED_DGNDB_PROFILE_VENDOR_CONTACT_CUSTOM_64
$DGNDB_SEED_SEED_DGNDB_PROFILE_VENDOR_CONTACT_CUSTOM_65
$DGNDB_SEED_SEED_DGNDB_PROFILE_VENDOR_CONTACT_CUSTOM_66
$DGNDB_SEED_SEED_DGNDB_PROFILE_VENDOR_CONTACT_CUSTOM_67
$DGNDB_SEED_SEED_DGNDB_PROFILE_VENDOR_CONTACT_CUSTOM_68
$DGNDB_SEED_SEED_DGNDB_PROFILE_VENDOR_CONTACT_CUSTOM_69
$DGNDB_SEED_SEED_DGNDB_PROFILE_VENDOR_CONTACT_CUSTOM_70
$DGNDB_SEED_SEED_DGNDB_PROFILE_VENDOR_CONTACT_CUSTOM_71
$DGNDB_SEED_SEED_DGNDB_PROFILE_VENDOR_CONTACT_CUSTOM_72
$DGNDB_SEED_SEED_DGNDB_PROFILE_VENDOR_CONTACT_CUSTOM_73
$DGNDB_SEED_SEED_DGNDB_PROFILE_VENDOR_CONTACT_CUSTOM_74
$DGNDB_SEED_SEED_DGNDB_PROFILE_VENDOR_CONTACT_CUSTOM_75
$DGNDB_SEED_SEED_DGNDB_PROFILE_VENDOR_CONTACT_CUSTOM_76
$DGNDB_SEED_SEED_DGNDB_PROFILE_VENDOR_CONTACT_CUSTOM_77
$DGNDB_SEED_SEED_DGNDB_PROFILE_VENDOR_CONTACT_CUSTOM_78
$DGNDB_SEED_SEED_DGNDB_PROFILE_VENDOR_CONTACT_CUSTOM_79
$DGNDB_SEED_SEED_DGNDB_PROFILE_VENDOR_CONTACT_CUSTOM_80
$DGNDB_SEED_SEED_DGNDB_PROFILE_VENDOR_CONTACT_CUSTOM_81
$DGNDB_SEED_SEED_DGNDB_PROFILE_VENDOR_CONTACT_CUSTOM_82
$DGNDB_SEED_SEED_DGNDB_PROFILE_VENDOR_CONTACT_CUSTOM_83
$DGNDB_SEED_SEED_DGNDB_PROFILE_VENDOR_CONTACT_CUSTOM_84
$DGNDB_SEED_SEED_DGNDB_PROFILE_VENDOR_CONTACT_CUSTOM_85
$DGNDB_SEED_SEED_DGNDB_PROFILE_VENDOR_CONTACT_CUSTOM_86
$DGNDB_SEED_SEED_DGNDB_PROFILE_VENDOR_CONTACT_CUSTOM_87
$DGNDB_SEED_SEED_DGNDB_PROFILE_VENDOR_CONTACT_CUSTOM_88
$DGNDB_SEED_SEED_DGNDB_PROFILE_VENDOR_CONTACT_CUSTOM_89
$DGNDB_SEED_SEED_DGNDB_PROFILE_VENDOR_CONTACT_CUSTOM_90
$DGNDB_SEED_SEED_DGNDB_PROFILE_VENDOR_CONTACT_CUSTOM_91
$DGNDB_SEED_SEED_DGNDB_PROFILE_VENDOR_CONTACT_CUSTOM_92
$DGNDB_SEED_SEED_DGNDB_PROFILE_VENDOR_CONTACT_CUSTOM_93
$DGNDB_SEED_SEED_DGNDB_PROFILE_VENDOR_CONTACT_CUSTOM_94
$DGNDB_SEED_SEED_DGNDB_PROFILE_VENDOR_CONTACT_CUSTOM_95
$DGNDB_SEED_SEED_DGNDB_PROFILE_VENDOR_CONTACT_CUSTOM_96
$DGNDB_SEED_SEED_DGNDB_PROFILE_VENDOR_CONTACT_CUSTOM_97
$DGNDB_SEED_SEED_DGNDB_PROFILE_VENDOR_CONTACT_CUSTOM_98
$DGNDB_SEED_SEED_DGNDB_PROFILE_VENDOR_CONTACT_CUSTOM_99
$DGNDB_SEED_SEED_DGNDB_PROFILE_VENDOR_CONTACT_CUSTOM_100

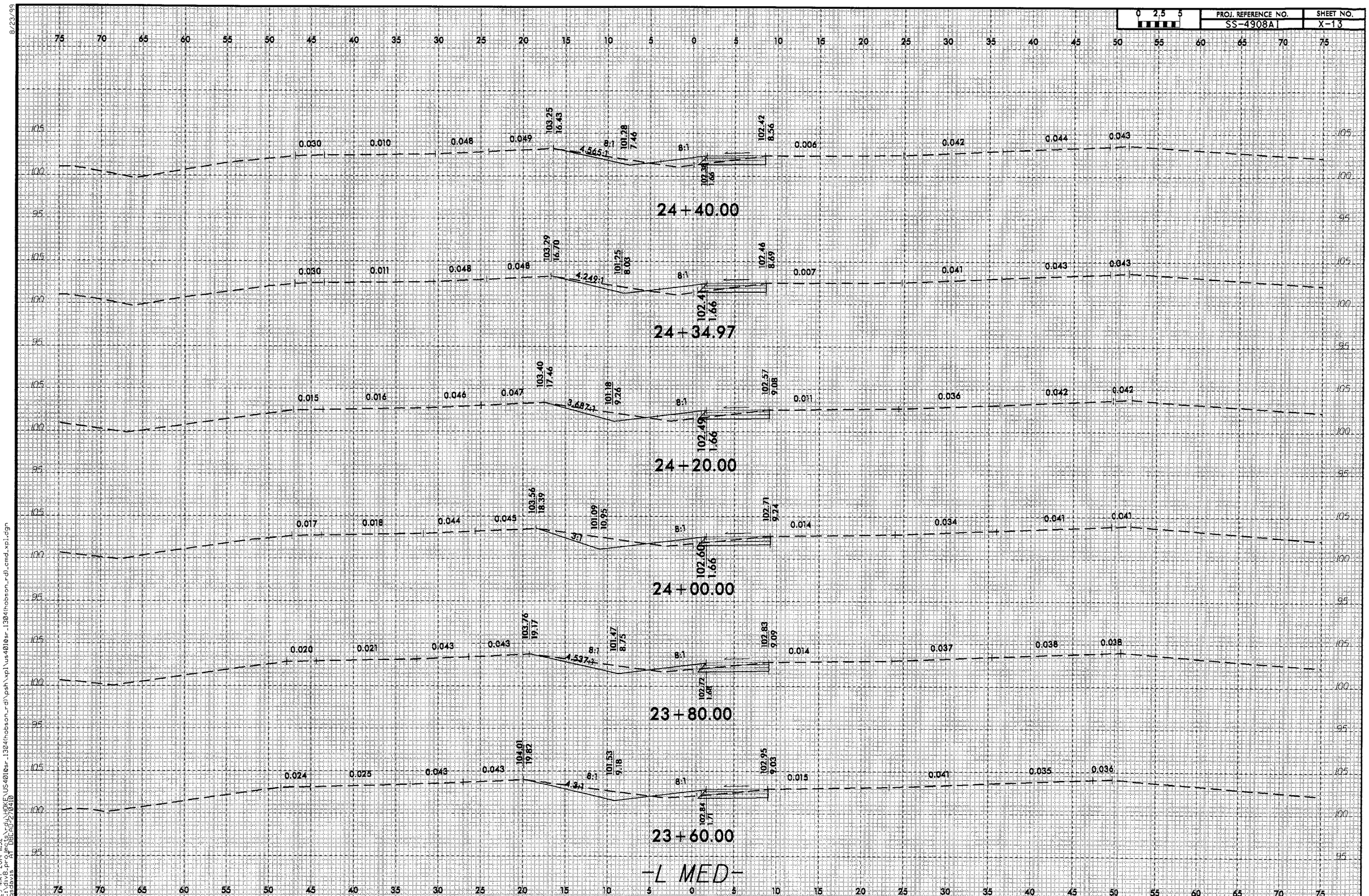

8/23/99

29-MAY-2014 11:32
C:\div8_projects\rdy\HOKE\US4010sr_1304(hobson_rd)\psh\xpl\us4010sr_1304(hobson_rd)_cmd_xpl.dgn
asdavis AT DBCAD-270410

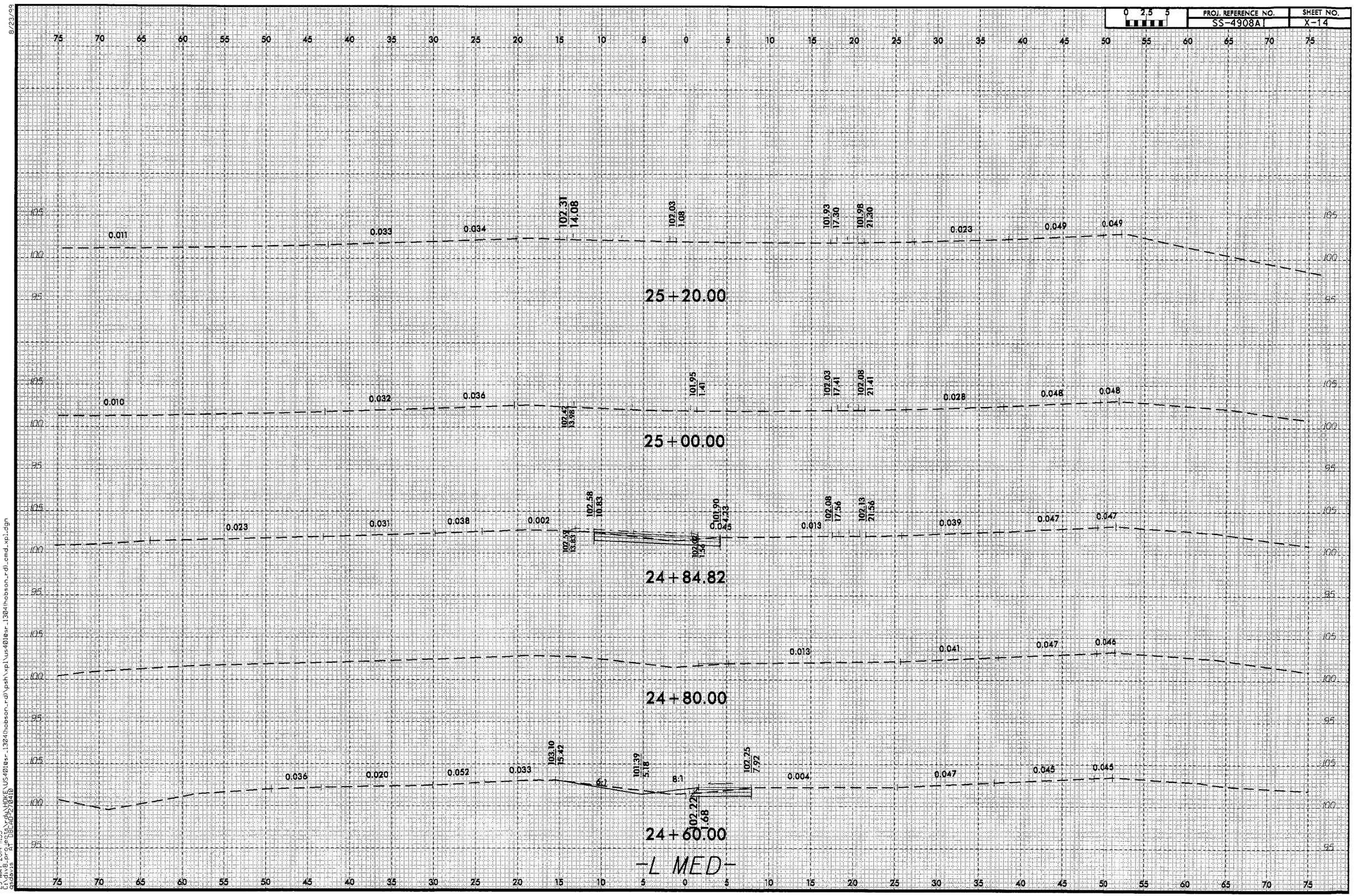

8/23/99

29-MAY-2014 11:33
C:\div8_projects\rdy\HOKE\US401@sr_1304(hobson_rd)\psh\xpl\us401@sr_1304(hobson_rd)_cmd_xpl.dgn
gsdavis AT DBCAD-270410

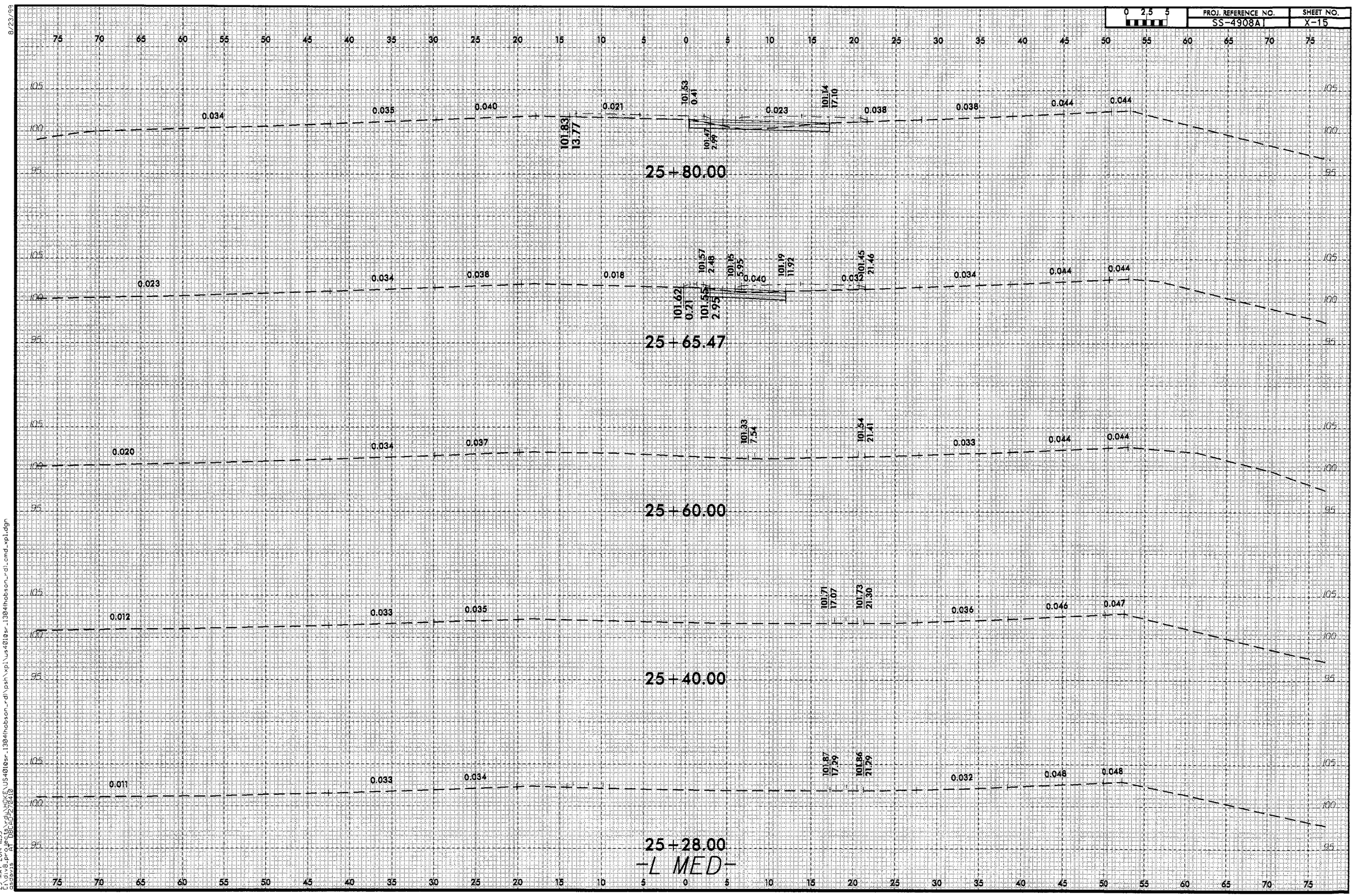

8/23/99

29-MAY-2014 11:33
C:\div8_projects\rdy\HOKE\US401@sr_1304(hobson_rd)\psh\xpl\us401@sr_1304(hobson_rd)_cmd_xpl.dgn
asdavis AT DBCAD-270410

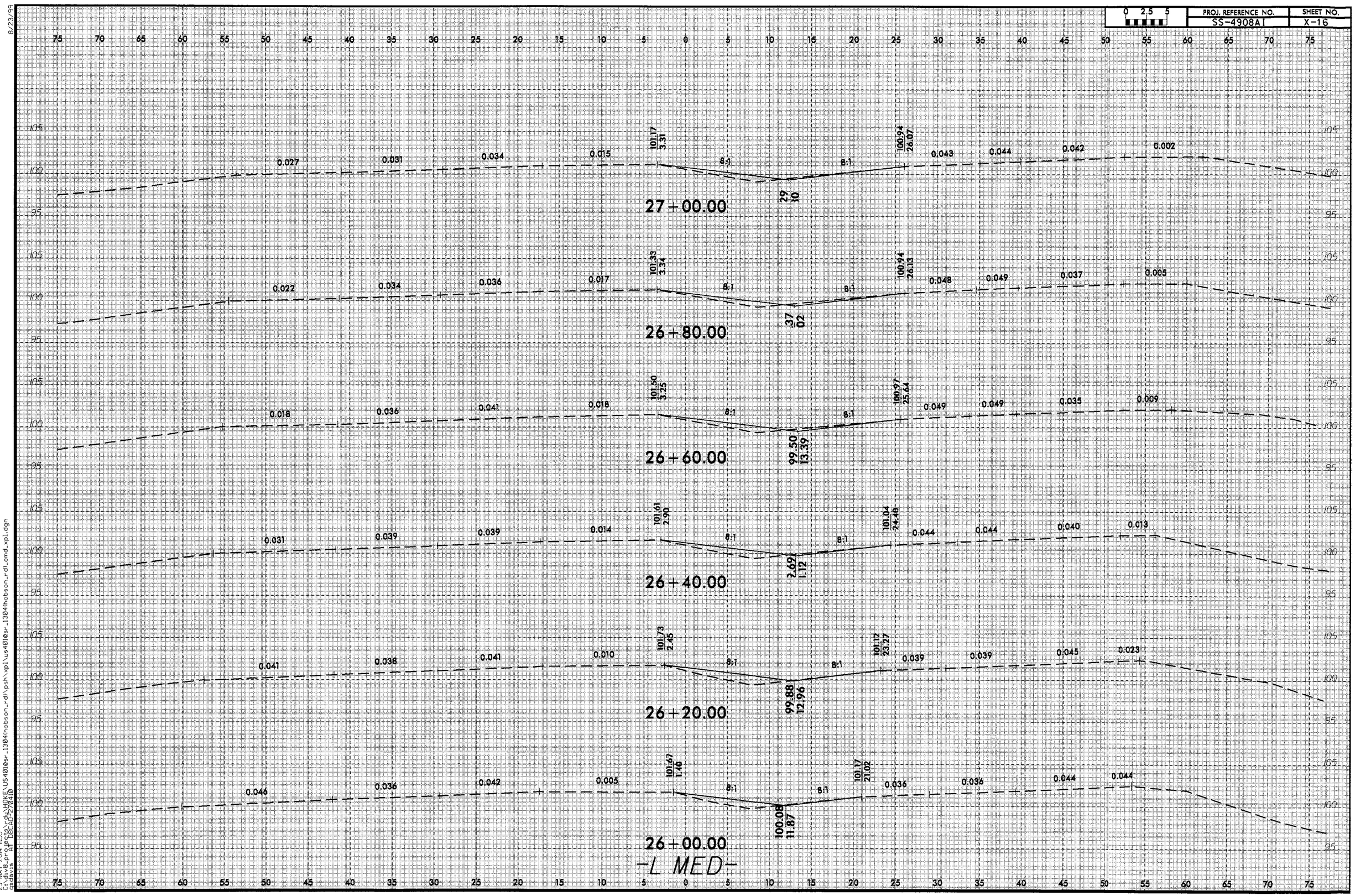

8/23/99

29-MAY-2014 11:33
C:\div8_projects\rdy\HOKE\US401@sr_1304(hobson_rd)\psh\xpl\us401@sr_1304(hobson_rd)_cmd_xpl.dgn
gsdavis AT D8CAD-270410

09/08/99

TIP PROJECT: W-5208J

CONTRACT:

See Sheet 1-A For Index of Sheets

STATE OF NORTH CAROLINA
DIVISION OF HIGHWAYS

STATE	STATE PROJECT REFERENCE NO.	SHEET NO.	TOTAL SHEETS
N.C.	W-5208J	1	

STATE PROJ. NO.	F. A. PROJ. NO.	DESCRIPTION
45338.1.10	HSIP-0401 (254)	PE
45338.2.10	HSIP-0401 (254)	R/W
45338.3.10	HSIP-0401 (254)	CONST.

PROJECT LOCATION

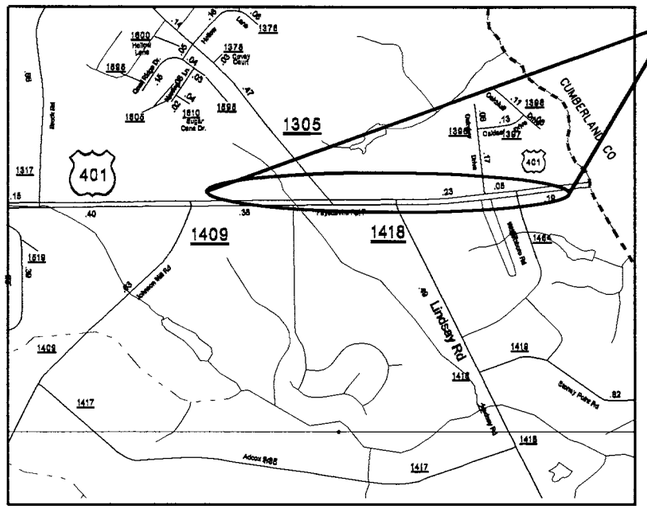

HOKE COUNTY

LOCATION: US 401 AT SR 1305 (WAYSIDE RD.) AND SR 1409 (LINDSAY RD)

TYPE OF WORK: GRADING, PAVING, DRAINAGE, CONCRETE ISLANDS, SIGNAL AND THEMOPLASTIC MARKINGS & MARKERS

-Y3- STA 10+51.70
BEGIN PROJECT W-5208J

-L MED- STA 55+40
END PROJECT W-5208J

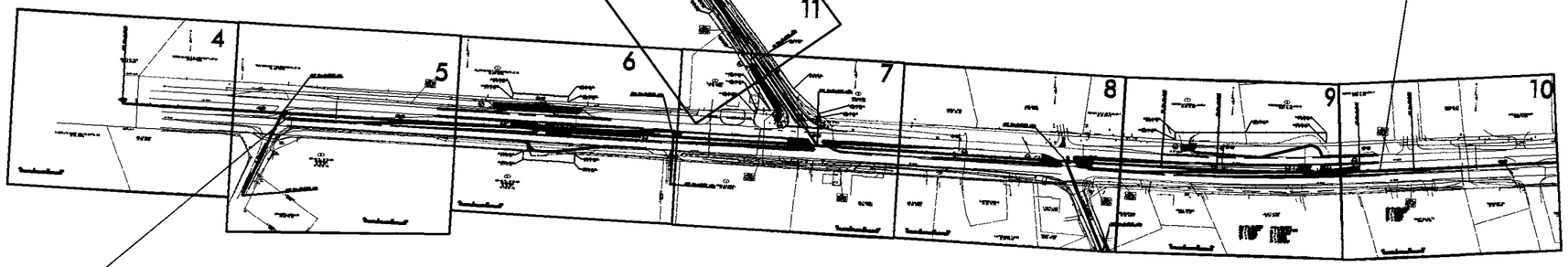

-L MED- STA. 15+93.94
BEGIN PROJECT W-5208J

GRAPHIC SCALES

0 25 50
PLANS

DESIGN DATA

ADT 2012 = 29,000

D = 50 %
T = 6 % *
V = 45 MPH
* TTST =3 DUAL 3

Prepared In the Office of:
DIVISION OF HIGHWAYS
DIVISION 8 DESIGN & CONSTRUCT UNIT
902 N. SANDHILLS BLVD.
ABERDEEN NC 28315
PLANS PREPARED BY: MRT

PROJECT LENGTH
ROADWAY: 0.93 MILES
STRUCTURE: _____ MILES
TOTAL: 0.93 MILES

DIVISION OF HIGHWAYS

2012 STANDARD SPECIFICATIONS

RIGHT OF WAY DATE:

LETTING DATE:

STATE OF NORTH CAROLINA · DEPARTMENT OF TRANSPORTATION

DIVISION DESIGN & CONSTRUCT ENGINEER

NORTH CAROLINA PROFESSIONAL SEAL 26930 ENGINEER GREG S. DAVIS

5-30-14

29-MAY-2014 16:09
C:\dv8_projects\rdy\H0KE\nc401@sr_1305(wayside_rd)\psh\us401@SR-1305(wayside_rd)_tsh.dgn
gsdavis AT D8CAD-270410

PROJECT REFERENCE NO.	SHEET NO.
W-5208J	2
R/W SHEET NO.	

5-30-14

TYPICAL SECTION NO. 1
-L MED - STA. 15+93.94 TO 17+00.00

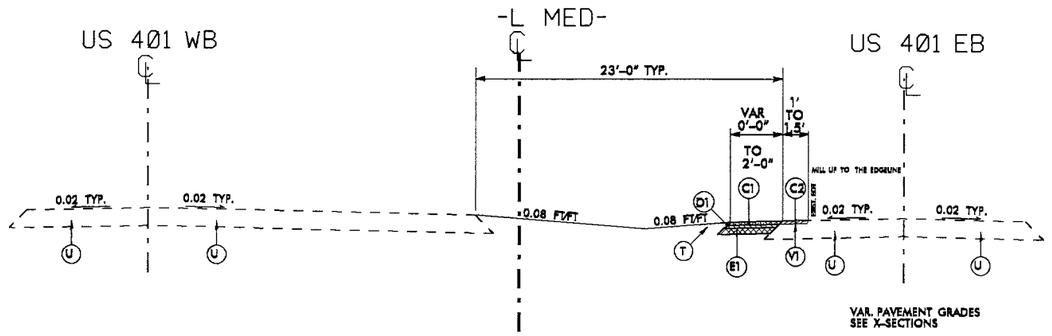

TYPICAL SECTION NO. 2
-L MED- STA. 17+00.00 TO 21+25.20

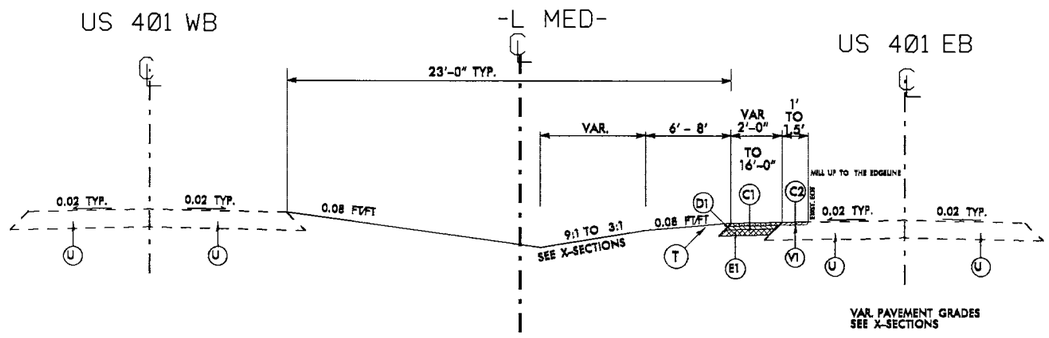

TYPICAL SECTION NO. 3
-L MED- STA. 21+25.20 TO 22+20

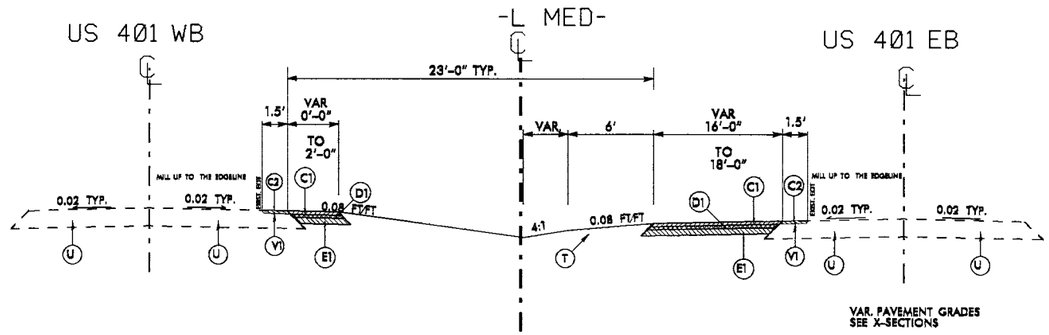

PAVEMENT SCHEDULE

C1	PROP. APPROX. 3" ASPHALT CONCRETE SURFACE COURSE, TYPE S9.5B, AT AN AVERAGE RATE OF 168 LBS. PER SQ. YD. PER 1½" DEPTH. TO BE PLACED IN TWO LAYERS.
C2	PROP. APPROX. 1.5" ASPHALT CONCRETE SURFACE COURSE, TYPE S9.5B, AT AN AVERAGE RATE OF 168 LBS. PER SQ. YD.
D1	PROP. APPROX. 4" ASPHALT CONCRETE INTERMEDIATE COURSE, TYPE I19.B, AT AN AVERAGE RATE OF 456 LBS. PER SQ. YD.
E1	PROP. APPROX. 5.5" ASPHALT CONCRETE BASE COURSE, TYPE B25.B, AT AN AVERAGE RATE OF 627 LBS. PER SQ. YD.
R1	5" MONOLITHIC CONCRETE ISLAND. (SURFACE MOUNTED)
T	EARTH MATERIAL.
U	EXISTING PAVEMENT.
V1	0" TO 1.5" MILLING

NOTE: PAVEMENT EDGE SLOPES ARE 1:1 UNLESS SHOWN OTHERWISE.

TYPICAL SECTION NO. 4
-L MED- STA. 22+20.00 TO 24+05.38

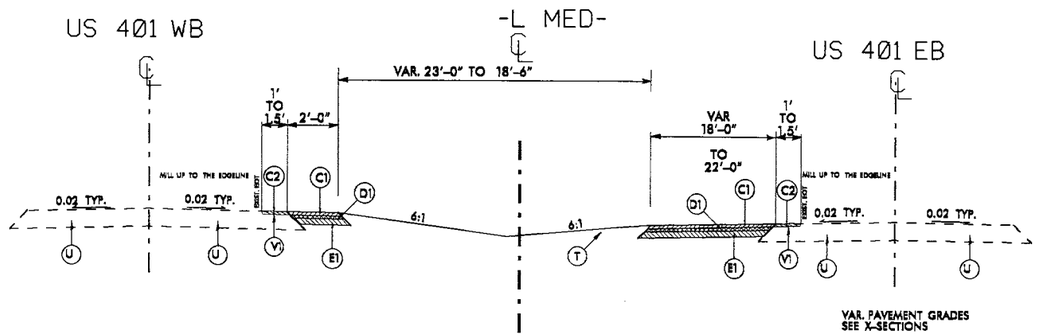

23-MAY-2014 14:13
C:\Projects\...\sr_1305\wayside_rd\SHOVE\nc4018sr_1305\wayside_rd\psh\us401&SR-1305\wayside_rd_typ.dgn
$$USER_NAME$$ $$PLOT_SCALE$$ $$PLOT_DATE$$

PROJECT REFERENCE NO.	SHEET NO.
W-5208J	2-A
R/W SHEET NO.	

5-30-14

DIVISION DESIGN / CONSTRUCT ENGINEER

REVISIONS

8/17/99

TYPICAL SECTION NO. 5
-L MED- STA. 21+30.58 TO 27+56.93 LT

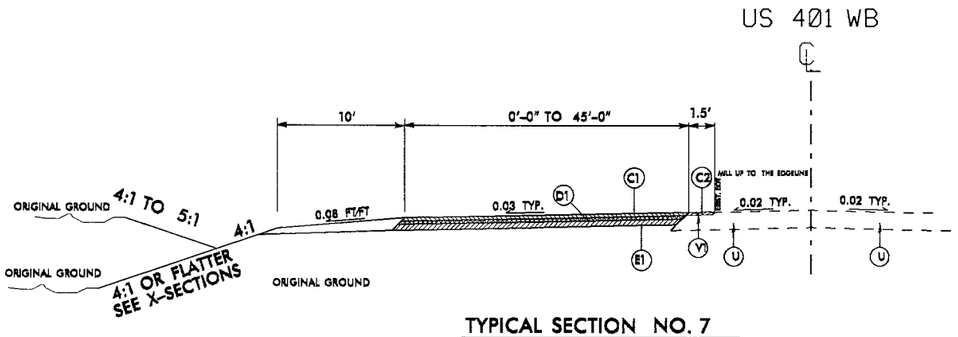

TYPICAL SECTION NO. 6
-L MED- STA. 22+64.38 TO 26+00.00 RT

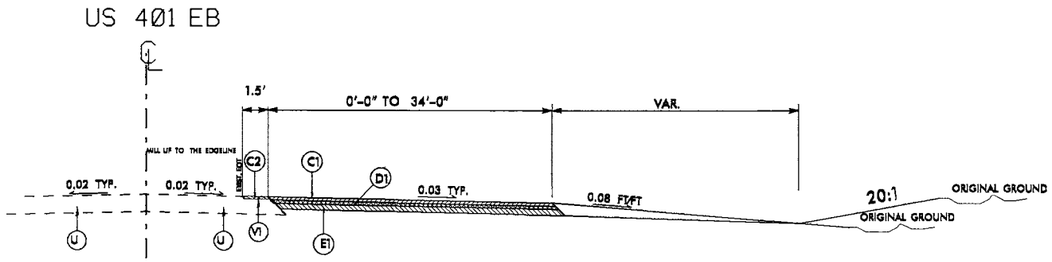

TYPICAL SECTION NO. 7
-L MED- STA. 26+00.00 TO 28+90.20 RT

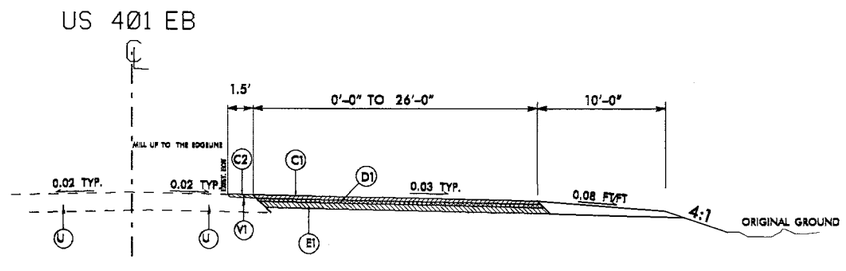

TYPICAL SECTION NO. 8
-L MED- STA. 24+05.38 TO 25+11.00

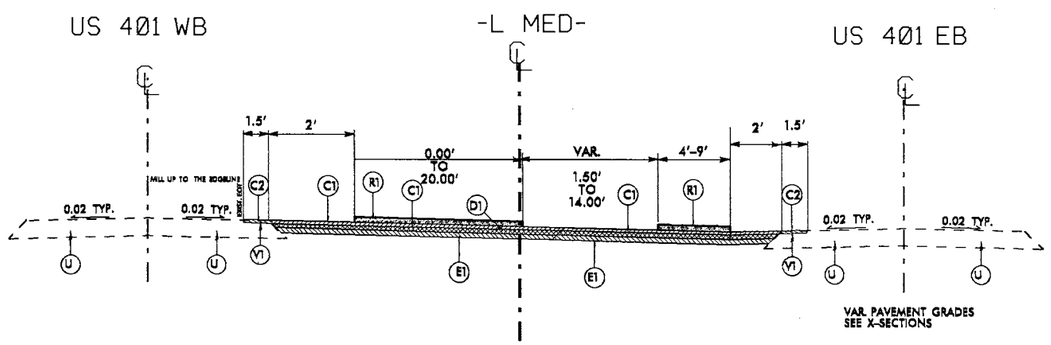

PAVEMENT SCHEDULE

C1	PROP. APPROX. 3" ASPHALT CONCRETE SURFACE COURSE, TYPE S9.5B, AT AN AVERAGE RATE OF 168 LBS. PER SQ. YD. PER 1½" DEPTH. TO BE PLACED IN TWO LAYERS.
C2	PROP. APPROX. 1.5" ASPHALT CONCRETE SURFACE COURSE, TYPE S9.5B, AT AN AVERAGE RATE OF 168 LBS. PER SQ. YD.
D1	PROP. APPROX. 4" ASPHALT CONCRETE INTERMEDIATE COURSE, TYPE I19.B, AT AN AVERAGE RATE OF 456 LBS. PER SQ. YD.
E1	PROP. APPROX. 5.5" ASPHALT CONCRETE BASE COURSE, TYPE B25.B, AT AN AVERAGE RATE OF 627 LBS. PER SQ. YD.
R1	5" MONOLITHIC CONCRETE ISLAND. (SURFACE MOUNTED)
T	EARTH MATERIAL.
U	EXISTING PAVEMENT.
V1	0" TO 1.5" MILLING

NOTE: PAVEMENT EDGE SLOPES ARE 1:1 UNLESS SHOWN OTHERWISE.

28-MAY-2014 16:30
c:\projects\roadway\HOKE\rdu4010sr_1305\wayside_rdl\psh\us401@SR-1305\wayside_rdl_typ.dgn
$cellset pr 3 1 DB 00>27010

PROJECT REFERENCE NO.	SHEET NO.
W-5208J	2-B
R/W SHEET NO.	

5-30-14

NORTH CAROLINA PROFESSIONAL SEAL 26930 ENGINEER DAVID T. DAVIS

DIVISION DESIGN / CONSTRUCT ENGINEER

REVISIONS

8/17/99

TYPICAL SECTION NO. 9
-L MED- STA. 25+11.00 TO 26+15.39

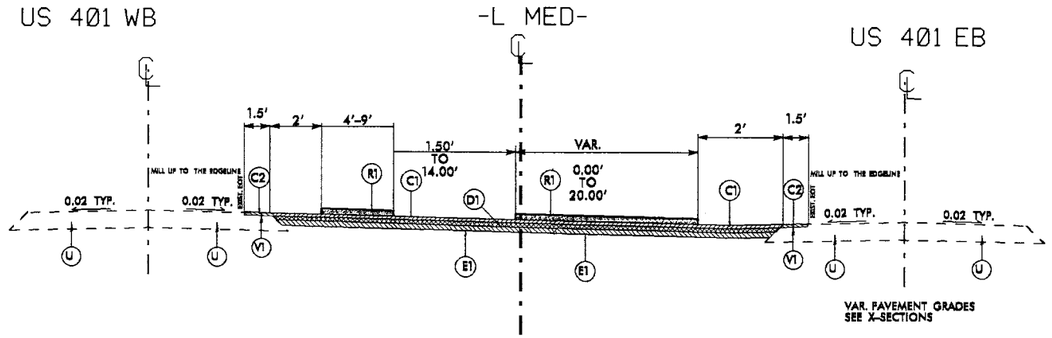

TYPICAL SECTION NO. 10
-L MED- STA. 26+15.39 TO 29+20.00

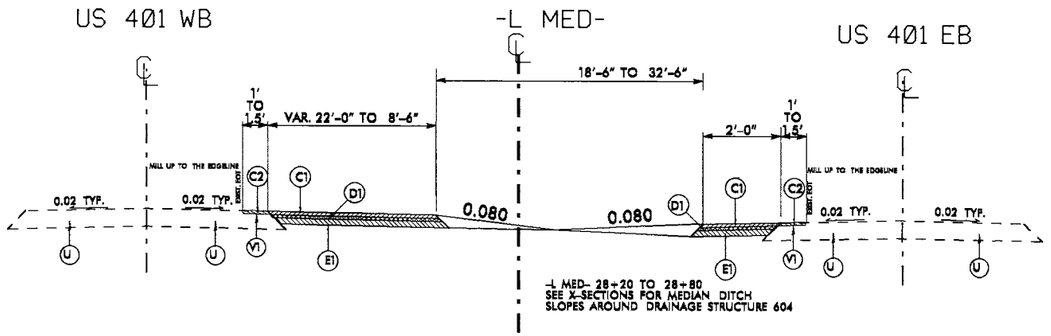

TYPICAL SECTION NO. 11
-L MED- STA. 29+20.00 TO 29+96.24

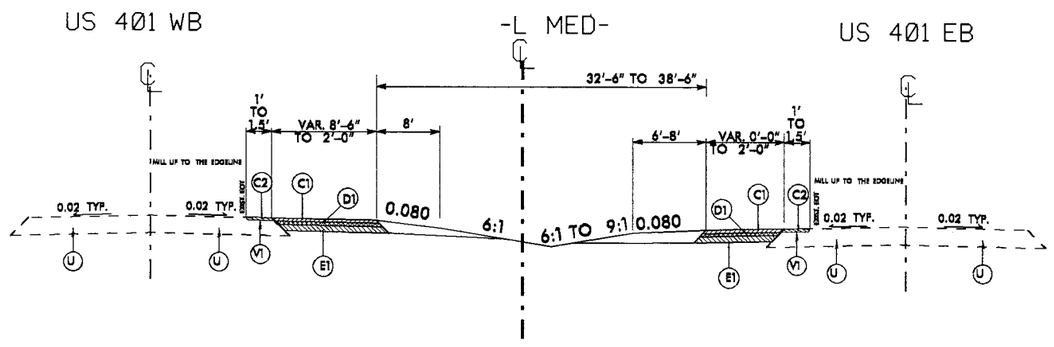

PAVEMENT SCHEDULE	
C1	PROP. APPROX. 3" ASPHALT CONCRETE SURFACE COURSE, TYPE S9.5B, AT AN AVERAGE RATE OF 168 LBS. PER SQ. YD. PER 1½" DEPTH. TO BE PLACED IN TWO LAYERS.
C2	PROP. APPROX. 1.5" ASPHALT CONCRETE SURFACE COURSE, TYPE S9.5B, AT AN AVERAGE RATE OF 168 LBS. PER SQ. YD.
D1	PROP. APPROX. 4" ASPHALT CONCRETE INTERMEDIATE COURSE, TYPE I19.B, AT AN AVERAGE RATE OF 456 LBS. PER SQ. YD.
E1	PROP. APPROX. 5.5" ASPHALT CONCRETE BASE COURSE, TYPE B25.B, AT AN AVERAGE RATE OF 627 LBS. PER SQ. YD.
R1	5" MONOLITHIC CONCRETE ISLAND. (SURFACE MOUNTED)
T	EARTH MATERIAL.
U	EXISTING PAVEMENT.
V1	0" TO 1.5" MILLING

NOTE: PAVEMENT EDGE SLOPES ARE 1:1 UNLESS SHOWN OTHERWISE.

28-MAY-2014 16:30
R:\sdd\projects\rdu\HOKE\nc4010sr_1305\wayside_rd\psh\us401@SR-1305(wayside_rd)_typ.dgn
$$USER_NAME$$
$$PLOT_DATE$$

PROJECT REFERENCE NO.	SHEET NO.
W-5208J	2-C
R/W SHEET NO.	

5-30-14

NORTH CAROLINA PROFESSIONAL SEAL 26930 ENGINEER GREG S. DAVIS

DIVISION DESIGN / CONSTRUCT ENGINEER

TYPICAL SECTION NO. 12

-L MED- STA. 29+96.24.00 TO 34+00.00

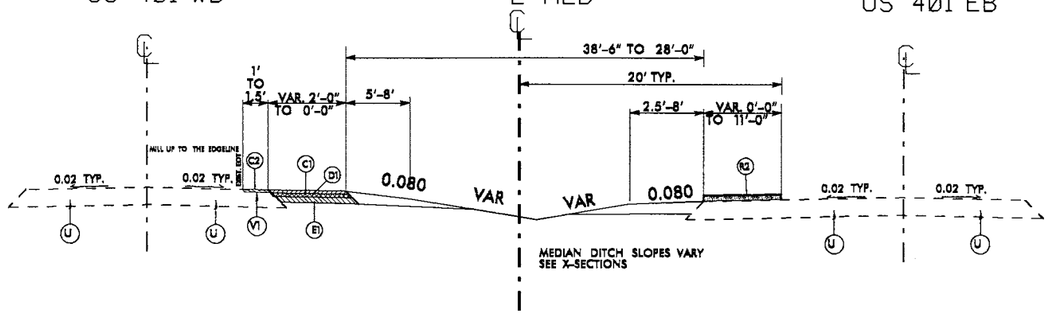

TYPICAL SECTION NO. 13

-L MED- STA. 34+00.00 TO 34+95.00

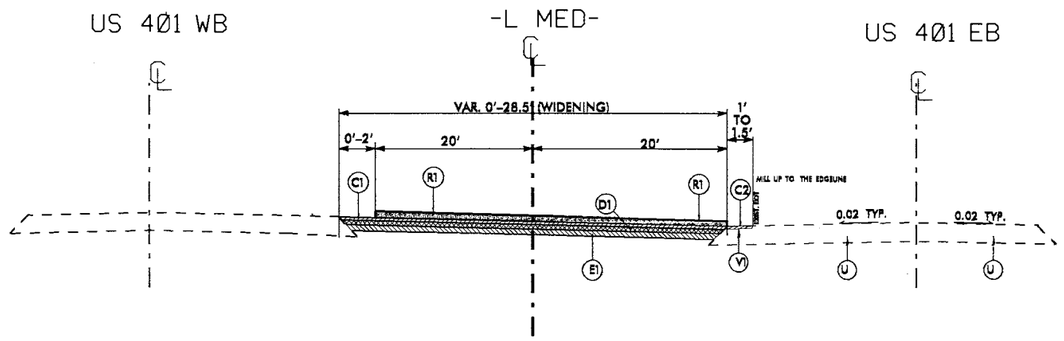

TYPICAL SECTION NO. 14

-L MED- STA. 35+20.00 TO 39+16.95

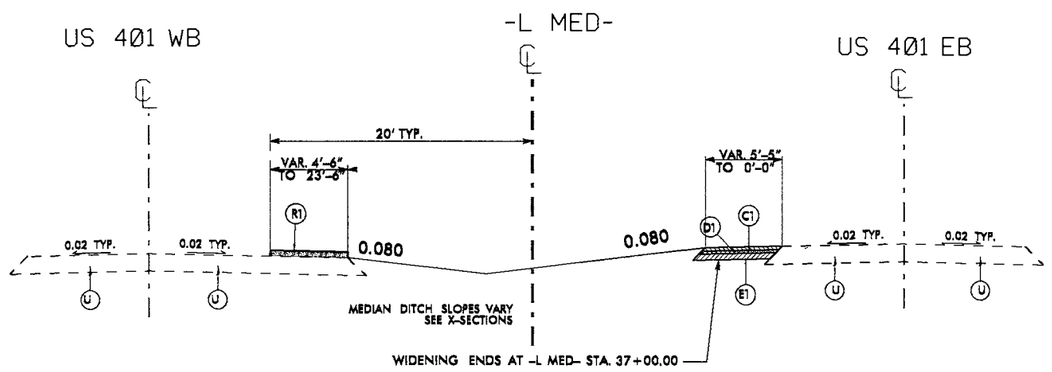

PAVEMENT SCHEDULE	
C1	PROP. APPROX. 3" ASPHALT CONCRETE SURFACE COURSE, TYPE S9.5B, AT AN AVERAGE RATE OF 166 LBS. PER SQ. YD. PER 1½" DEPTH. TO BE PLACED IN TWO LAYERS.
C2	PROP. APPROX. 1.5" ASPHALT CONCRETE SURFACE COURSE, TYPE S9.5B, AT AN AVERAGE RATE OF 168 LBS. PER SQ. YD.
D1	PROP. APPROX. 4" ASPHALT CONCRETE INTERMEDIATE COURSE, TYPE I19.B, AT AN AVERAGE RATE OF 456 LBS. PER SQ. YD.
E1	PROP. APPROX. 5.5" ASPHALT CONCRETE BASE COURSE, TYPE B25.B, AT AN AVERAGE RATE OF 627 LBS. PER SQ. YD.
R1	5" MONOLITHIC CONCRETE ISLAND. (SURFACE MOUNTED)
T	EARTH MATERIAL.
U	EXISTING PAVEMENT.
V1	0" TO 1.5" MILLING

NOTE: PAVEMENT EDGE SLOPES ARE 1:1 UNLESS SHOWN OTHERWISE.

REVISIONS

8/17/99

29-MAY-2014 14:13
C:\div8_projects\rdy\HOKE\nc401@sr_1305(wayside_rd)\psh\us401@SR-1305(wayside_rd)_typ.dgn

PROJECT REFERENCE NO.	SHEET NO.
W-5208J	2-D
RW SHEET NO.	

5-30-14

DIVISION DESIGN / CONSTRUCT ENGINEER

TYPICAL SECTION NO. 15
-L MED- STA. 39+16.95 TO 43+90.26

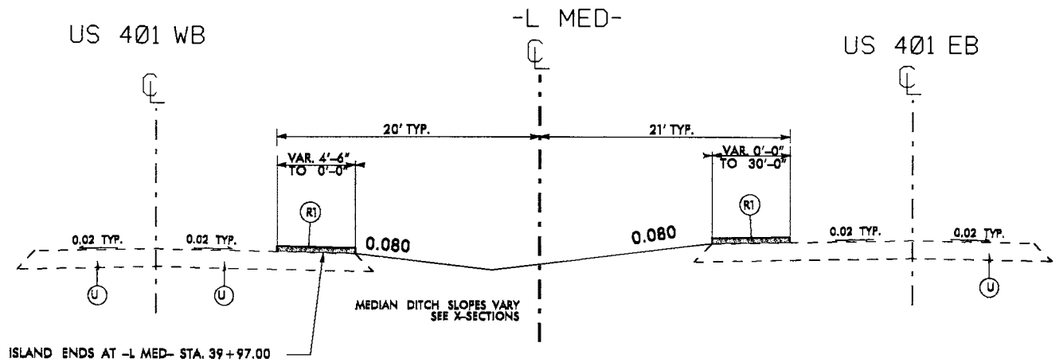

TYPICAL SECTION NO. 16
-L MED- STA. 44+29.00 TO 44+64.34

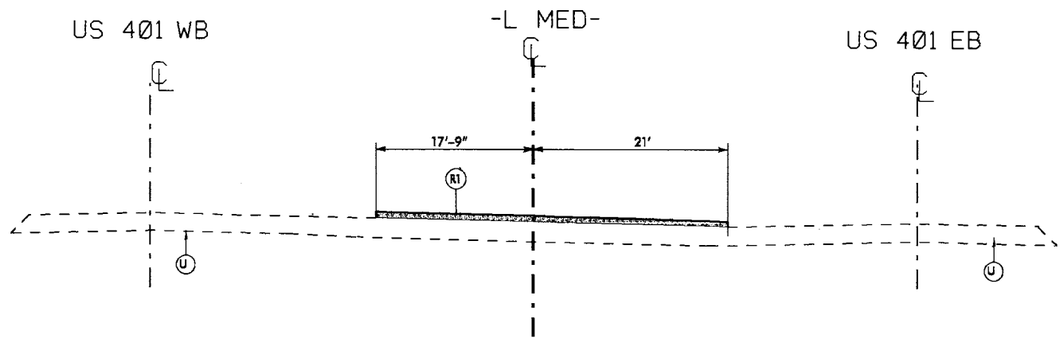

TYPICAL SECTION NO. 17
-L MED- STA. 43+12.80 TO 43+90.00
-L MED- STA. 44+64.34 TO 44+97.75

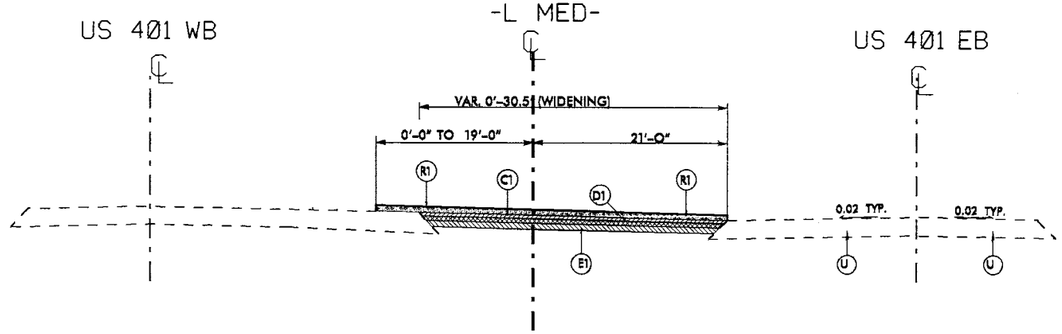

PAVEMENT SCHEDULE	
C1	PROP. APPROX. 3" ASPHALT CONCRETE SURFACE COURSE, TYPE S9.5B, AT AN AVERAGE RATE OF 168 LBS. PER SQ. YD. PER 1½" DEPTH. TO BE PLACED IN TWO LAYERS.
C2	PROP. APPROX. 1.5" ASPHALT CONCRETE SURFACE COURSE, TYPE S9.5B, AT AN AVERAGE RATE OF 168 LBS. PER SQ. YD.
D1	PROP. APPROX. 4" ASPHALT CONCRETE INTERMEDIATE COURSE, TYPE I19.B, AT AN AVERAGE RATE OF 456 LBS. PER SQ. YD.
E1	PROP. APPROX. 5.5" ASPHALT CONCRETE BASE COURSE, TYPE B25.B, AT AN AVERAGE RATE OF 627 LBS. PER SQ. YD.
R1	5" MONOLITHIC CONCRETE ISLAND. (SURFACE MOUNTED)
T	EARTH MATERIAL.
U	EXISTING PAVEMENT.
V1	0" TO 1.5" MILLING

NOTE: PAVEMENT EDGE SLOPES ARE 1:1 UNLESS SHOWN OTHERWISE.

REVISIONS

8/17/99

29-MAR-2014 14:13
C:\Projects\rdu\HOKE\nc401sr_1305\wayside_rd\psh\us401&SR-1305(wayside_rd)_typ.dgn
$$USER: pdelosreyes

PROJECT REFERENCE NO.	SHEET NO.
W-5208J	2-E
R/W SHEET NO.	

5-30-14

NORTH CAROLINA PROFESSIONAL SEAL 26930 ENGINEER REID A. DAVIS

DIVISION DESIGN / CONSTRUCT ENGINEER

8/17/99

REVISIONS

TYPICAL SECTION NO. 18
-L MED- STA. 44+97.75 TO 48+94.67

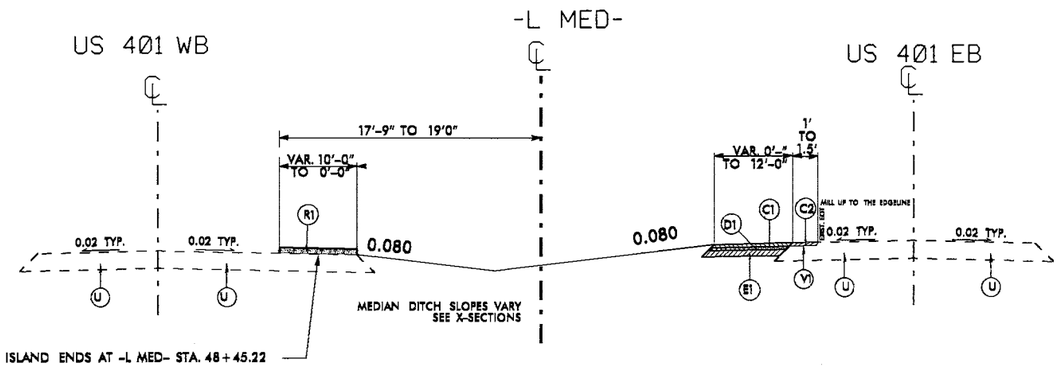

TYPICAL SECTION NO. 19
-L MED- STA. 48+94.67 TO 49+40.00

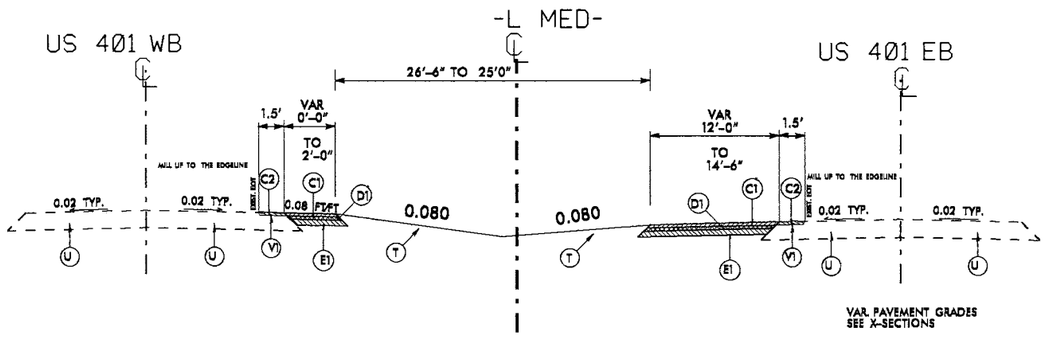

TYPICAL SECTION NO. 20
-L MED- STA. 49+40.00 TO 52+59.87

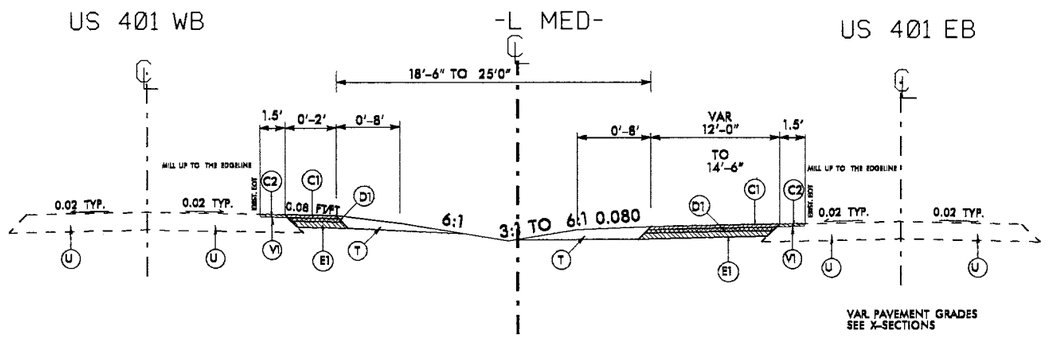

PAVEMENT SCHEDULE	
C1	PROP. APPROX. 3" ASPHALT CONCRETE SURFACE COURSE, TYPE S9.5B, AT AN AVERAGE RATE OF 168 LBS. PER SQ. YD. PER 1½" DEPTH. TO BE PLACED IN TWO LAYERS.
C2	PROP. APPROX. 1.5" ASPHALT CONCRETE SURFACE COURSE, TYPE S9.5B, AT AN AVERAGE RATE OF 168 LBS. PER SQ. YD.
D1	PROP. APPROX. 4" ASPHALT CONCRETE INTERMEDIATE COURSE, TYPE I19.B, AT AN AVERAGE RATE OF 456 LBS. PER SQ. YD.
E1	PROP. APPROX. 5.5" ASPHALT CONCRETE BASE COURSE, TYPE B25.B, AT AN AVERAGE RATE OF 627 LBS. PER SQ. YD.
R1	5" MONOLITHIC CONCRETE ISLAND. (SURFACE MOUNTED)
T	EARTH MATERIAL.
U	EXISTING PAVEMENT.
V1	0" TO 1.5" MILLING

NOTE: PAVEMENT EDGE SLOPES ARE 1:1 UNLESS SHOWN OTHERWISE.

29-MAY-2014 14:13
C:\dot\projects\rdu\HOKE\nc401&sr_1305\wayside_rd\psh\us401&SR-1305(wayside_rd)_typ.dgn

PROJECT REFERENCE NO.	SHEET NO.
W-5208J	2-F
R/W SHEET NO.	

5-30-14

DIVISION DESIGN / CONSTRUCT ENGINEER

REVISIONS 8/17/99

TYPICAL SECTION NO. 21
-L MED- STA. 52+59.87 TO 52+84.71

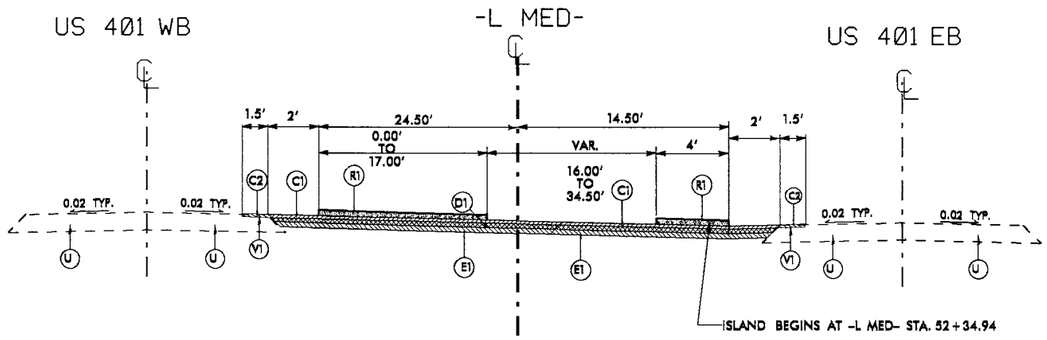

TYPICAL SECTION NO. 22
-L MED- STA. 52+84.71 TO 53+40.00

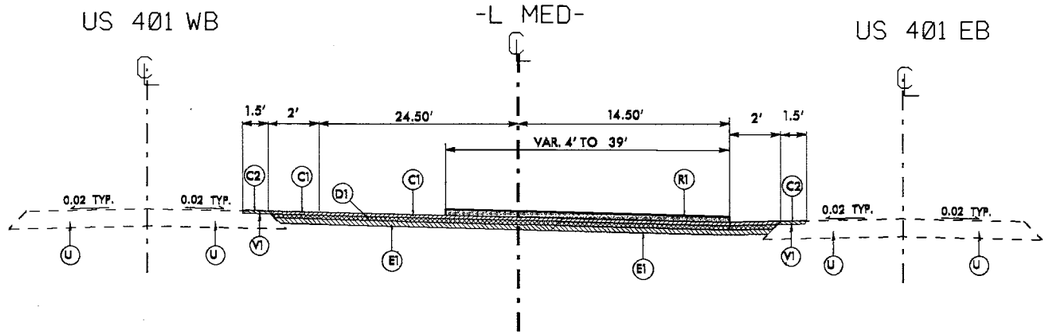

TYPICAL SECTION NO. 23
-L MED- STA. 53+40.00 TO 55+40.00

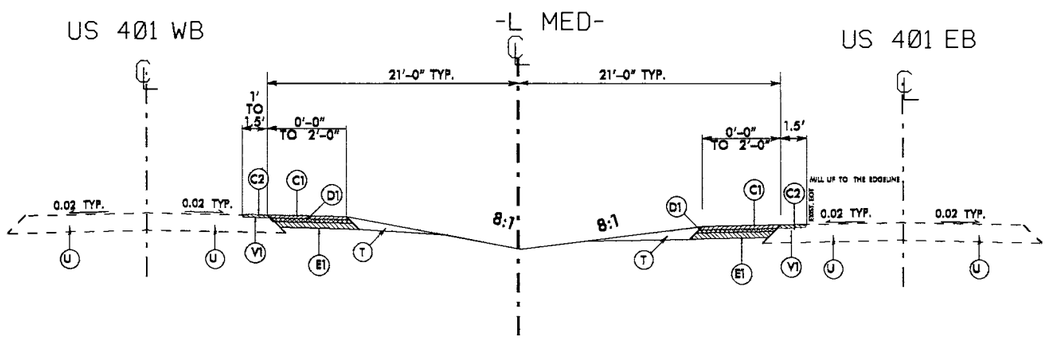

PAVEMENT SCHEDULE	
C1	PROP. APPROX. 3" ASPHALT CONCRETE SURFACE COURSE, TYPE S9.5B, AT AN AVERAGE RATE OF 166 LBS. PER SQ. YD. PER 1½" DEPTH. TO BE PLACED IN TWO LAYERS.
C2	PROP. APPROX. 1.5" ASPHALT CONCRETE SURFACE COURSE, TYPE S9.5B, AT AN AVERAGE RATE OF 166 LBS. PER SQ. YD.
D1	PROP. APPROX. 4" ASPHALT CONCRETE INTERMEDIATE COURSE, TYPE I19.B, AT AN AVERAGE RATE OF 456 LBS. PER SQ. YD.
E1	PROP. APPROX. 5.5" ASPHALT CONCRETE BASE COURSE, TYPE B25.B, AT AN AVERAGE RATE OF 627 LBS. PER SQ. YD.
R1	5" MONOLITHIC CONCRETE ISLAND. (SURFACE MOUNTED)
T	EARTH MATERIAL.
U	EXISTING PAVEMENT.
V1	0" TO 1.5" MILLING

NOTE: PAVEMENT EDGE SLOPES ARE 1:1 UNLESS SHOWN OTHERWISE.

TYPICAL SECTION NO. 24
-L MED- STA. 43+42.46 TO 55+40.00 LT

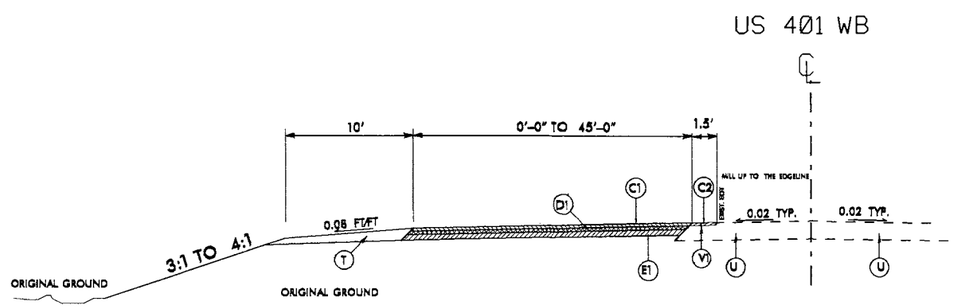

28-MAY-2014 16:30
C:\Users\jrdu\Desktop\HOKE\no401&sr-1305\wayside_rd\psh\us401&SR-1305wayside_rd_typ.dgn
$$USER: jrdu
$$DGNFILE: US401&SR-1305wayside_rd_typ.dgn
$$PROJECT: 2.4 DESIGN

PROJECT REFERENCE NO.	SHEET NO.
W-5208J	2-G
R/W SHEET NO.	

5-30-14

NORTH CAROLINA PROFESSIONAL SEAL 26930 ENGINEER GREG A. DAVIS

DIVISION DESIGN / CONSTRUCT ENGINEER

TYPICAL SECTION NO. 25
-Y3- STA. 10+51.70 TO 15+16.19

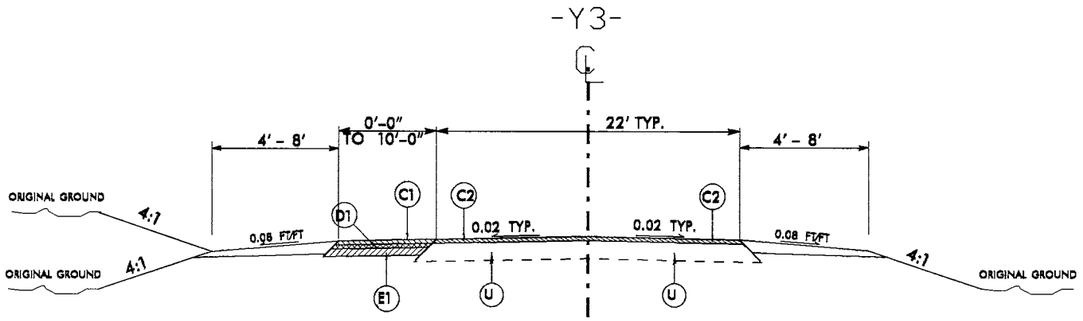

TYPICAL SECTION NO. 26
-Y3- STA. 15+16.19 TO 20+20.00

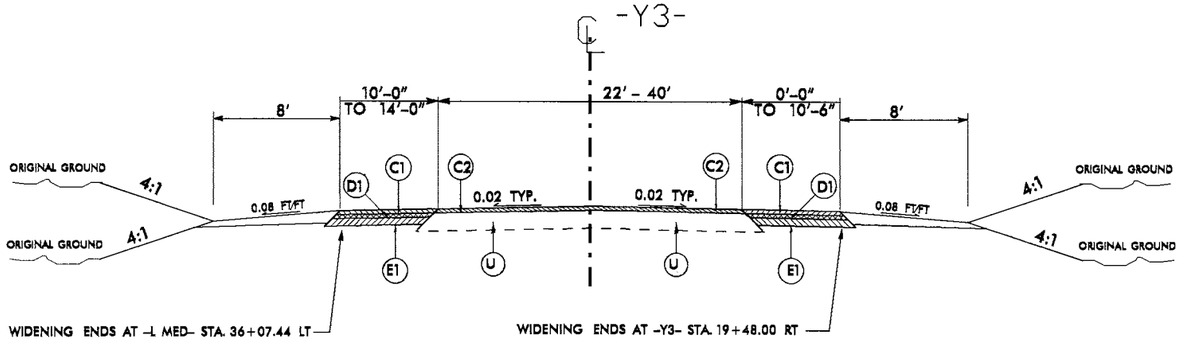

PAVEMENT SCHEDULE	
C1	PROP. APPROX. 3" ASPHALT CONCRETE SURFACE COURSE, TYPE S9.5B, AT AN AVERAGE RATE OF 168 LBS. PER SQ. YD. PER 1½" DEPTH. TO BE PLACED IN TWO LAYERS.
C2	PROP. APPROX. 1.5" ASPHALT CONCRETE SURFACE COURSE, TYPE S9.5B, AT AN AVERAGE RATE OF 168 LBS. PER SQ. YD.
D1	PROP. APPROX. 4" ASPHALT CONCRETE INTERMEDIATE COURSE, TYPE I19.B, AT AN AVERAGE RATE OF 456 LBS. PER SQ. YD.
E1	PROP. APPROX. 5.5" ASPHALT CONCRETE BASE COURSE, TYPE B25.B, AT AN AVERAGE RATE OF 627 LBS. PER SQ. YD.
R1	5" MONOLITHIC CONCRETE ISLAND. (SURFACE MOUNTED)
T	EARTH MATERIAL.
U	EXISTING PAVEMENT.
V1	0" TO 1.5" MILLING

NOTE: PAVEMENT EDGE SLOPES ARE 1:1 UNLESS SHOWN OTHERWISE.

REVISIONS

8/17/99

28-MAY-2014 16:30
C:\Users\gdavis\Desktop\HOKES\no4010sr-1305\wagside_rd\VHOKES\no4010sr-1305\wagside_rd\psh\us4010SR-1305\wagside_rd_typ.dgn
$DGN: d:\dgn\ATB2_72dpi.dgn

PROJECT REFERENCE NO.	SHEET NO.
W-5208J	2-H
R/W SHEET NO.	

ROADWAY DESIGN AND HYDRAULICS ENGINEER

5-30-14

NORTH CAROLINA PROFESSIONAL SEAL 26930 ENGINEER GREG S. DAVIS

DIVISION DESIGN / CONSTRUCT ENGINEER

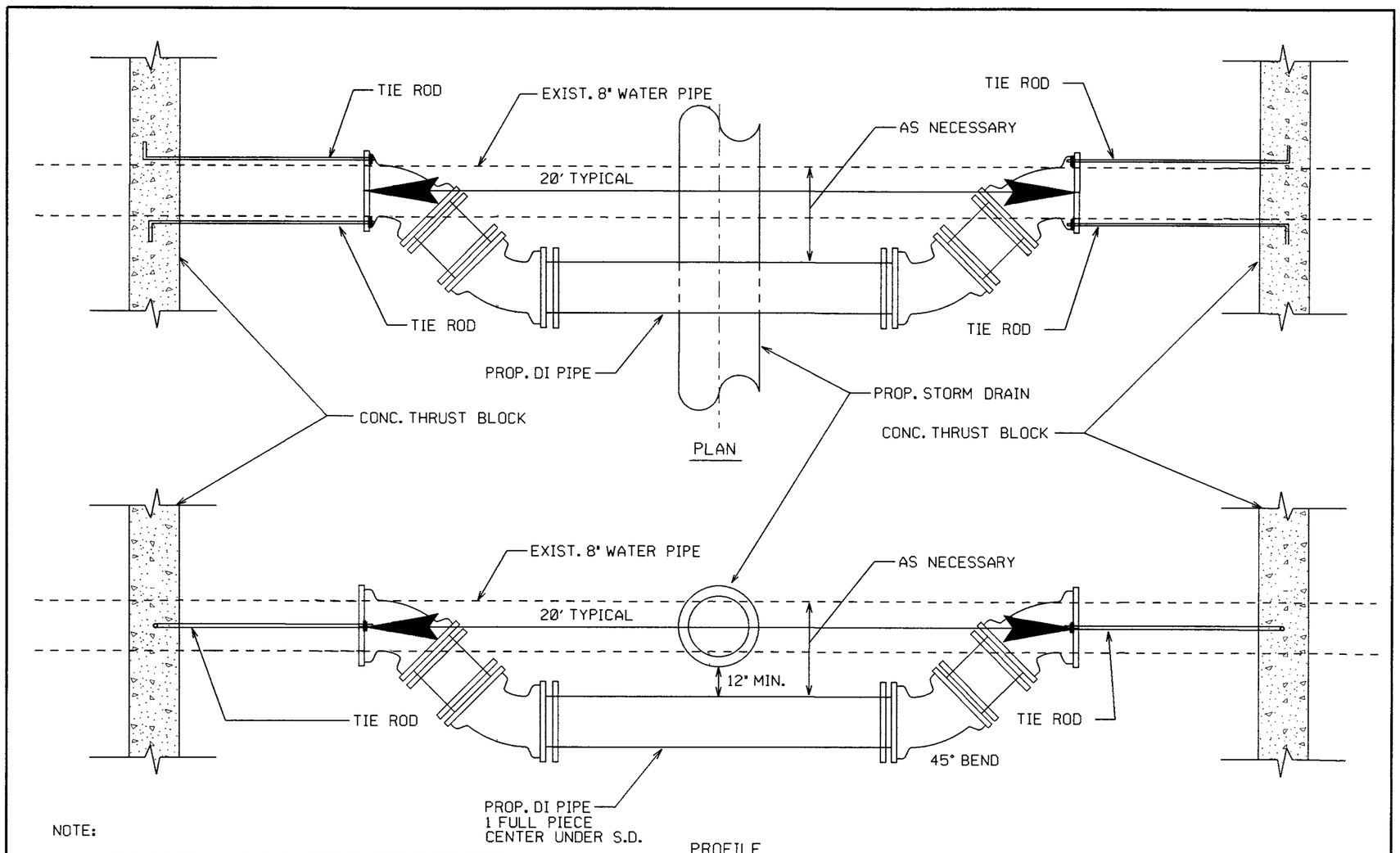

NOTE:

1. FITTINGS SHALL BE RESTRAINED BY USING TIE RODS OR OTHER METHOD AS APPROVED BY ENGINEER.
2. CONC. THRUST BLOCK SHALL BE PLACED AND CURED THREE DAYS PRIOR TO CUTTING EXISTING PIPE.

*NTS

RELOCATION OF 8" WATER PIPE AT PROP. STORM DRAINAGE AS SHOWN ON PLANS

REVISIONS

8/17/99

28-MAY-2014 13:20
C:\div8_projects\rdu\HOKE\nc401@sr_1305\wayside_rdl\psh\Water_drop.dgn

COMPUTED BY: DDC	DATE: 12/31/2013
CHECKED BY: GSD	DATE: 1/3/2014

PROJECT NO.	SHEET NO.
W-5208J	3

D8CAD221432

STATE OF NORTH CAROLINA
DIVISION OF HIGHWAYS

SUMMARY OF EARTHWORK

Station	Station	Uncl. Excav.	Embank. +%	Borrow	Waste
-L Med- 16+00	-L Med- 34+20	801	1098	297	
-L Med- 35+60	-L Med- 43+40	37	361	324	
-L Med- 44+80	-L Med- 55+40	467	2070	1603	
-Y3- 10+60	-Y3- 20+20514		161		353
SUBTOTALS:		1819	3690	2224	353
Waste to Replace Borrow				-353	-353
Subtotal				1871	
EST. 5% TO REPLACE TOPSOIL ON BORROW PITS				94	
PROJECT TOTALS:		1819	0	1965	
GRAND TOTALS:		1819		1965	
SAY:		1820		1970	

NOTE:
Shoulder Material included in Embankment quantities listed

Approximate quantities only. Unclassified excavation, borrow excavation, fine grading, clearing and grubbing, silt excavation and removal of concrete pavement will be paid for at the lump sum price for "Grading".

SUMMARY OF EXISTING CONCRETE PAVEMENT REMOVAL

LINE	Station	Station	LOC LT/RT/CL	FT^2
-Y3-	19+00	20+34	CL	933.88
-Y3-	17+40	18+15	RT	1206.12
			TOTAL:	2140.00
			SAY:	2140

RD103D/C

COMPUTED BY: DDC DATE: 12/31/2013

CHECKED BY: GSD DATE: 1/3/2013

STATE OF NORTH CAROLINA
DIVISION OF HIGHWAYS

PROJECT NO.	SHEET NO.
W-5208J	3-A

LIST OF PIPES, ENDWALLS, ETC. (FOR PIPES 48" & UNDER)

| STATION | LOCATION (LT, RT, OR CL)' | STRUCTURE NO. FROM | STRUCTURE NO. TO | TOP ELEVATION | INVERT ELEVATION | INVERT ELEVATION | SLOPE CRITICAL | CLASS III R.C. PIPE (UNLESS NOTED OTHERWISE) SIZE | | | | | | | CLASS IV R.C. PIPE (UNLESS NOTED OTHERWISE) SIZE | | | | | | | 15" SIDE DRAIN PIPE | 18" SIDE DRAIN PIPE | 24" SIDE DRAIN PIPE | ENDWALLS STD. 838.01 OR STD. 838.11 (UNLESS NOTED OTHERWISE) CU. YARDS | | QUANTITIES FOR DRAINAGE STRUCTURES *TOTAL L.F. FOR PAY QUANTITY SHALL BE COL. "A" * (1.3 X COL."B") LIN. FT. | | | C.B. STD. 840.01 OR STD. 840.02 | FRAME, GRATES, AND HOOD STANDARD 840.03 TYPE OF GRATE | | | D.I. STD. 840.14 OR STD. 840.15 | D.I. FRAME AND 2 GRATE STD. 840.16 | M.D.I. TYPE "A" STD. 840.17 OR 840.26 | M.D.I. TYPE "B" STD. 840.18 OR 840.27 | M.D.I. TYPE "D" STD. 840.19 OR 840.28 | M.D.I. FRAME WITH GRATE STD. 840.20 | M.D.I. FRAME WITH TWO GRATES STD. 840.22 | M.D.I. (N.S.) FRAME WITH GRATE STD. 840.24 | M.D.I. (N.S.) FRAME WITH TWO GRATES STD. 840.24 | J.B. STD. 840.31 OR 840.32 | MANHOLE STD. 840.51 | M.H. STD. 840.51 OR 840.53 | M.H. FRAME AND COVER STD. 840.54 | ADJUST DI | CONCRETE TRANSITIONAL SECTION FOR DROP INLETS | CORR. STEEL ELBOWS NO. & SIZE | CONC. COLLARS CL. "B" C.Y. STD. 840.72 | CONC. & BRICK PIPE PLUG, C.Y. STD. 840.71 | PIPE REMOVAL LIN. FT. | REMARKS |
|---|---|---

PROJECT REFERENCE NO.	SHEET NO.
W-5208J	4
R/W SHEET NO.	

GSOris
5-30-14

NORTH CAROLINA PROFESSIONAL SEAL 26930 ENGINEER GREG S. DAVIS

DIVISION DESIGN / CONSTRUCT ENGINEER

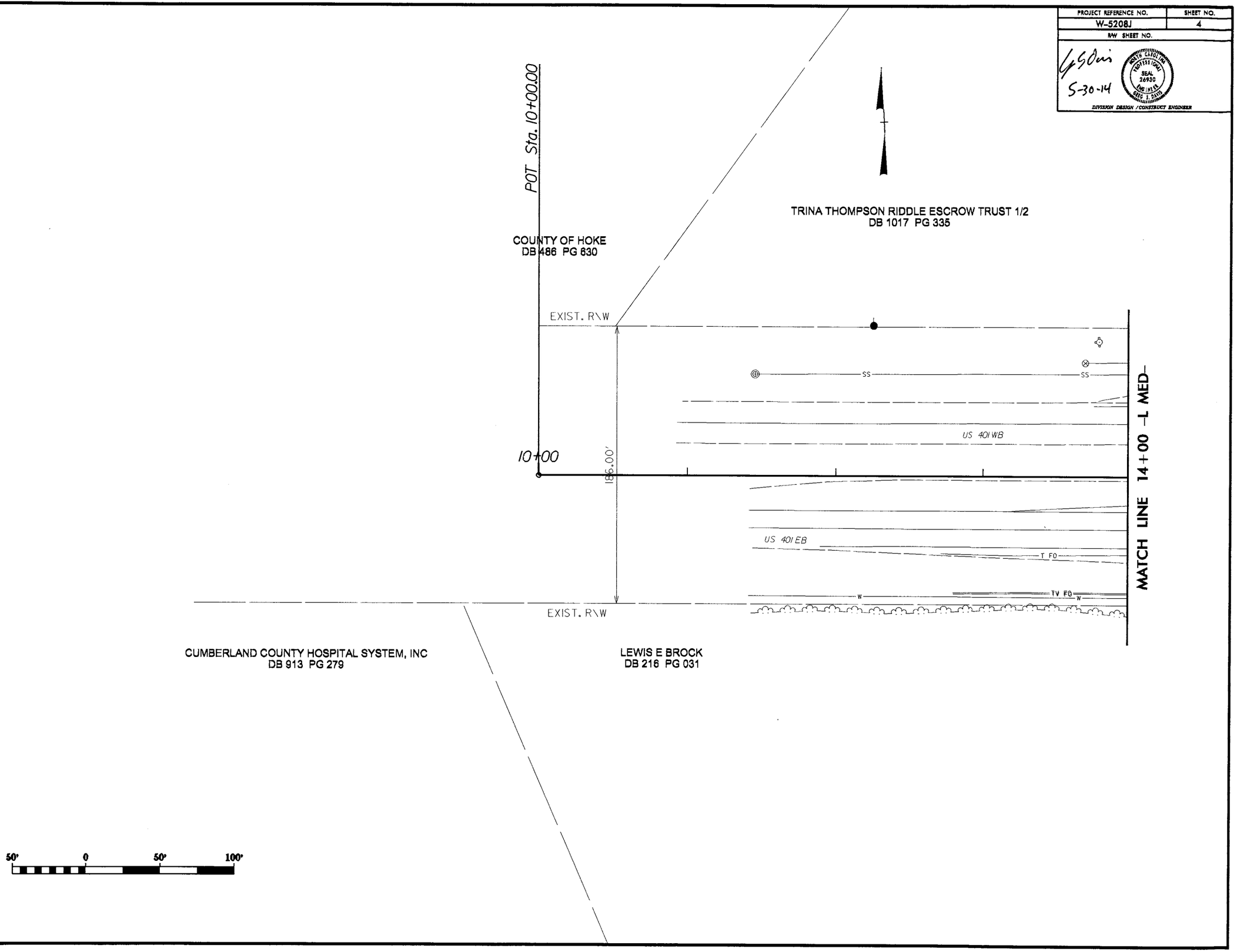

REVISIONS

8/17/99

29-MAY-2014 13:36
C:\dvd\projects\rdy\HOKE\nc401esr_1305\wayside_rd\psh\dsn\W-5208J_psh4.dgn

PROJECT REFERENCE NO.	SHEET NO.
W-5208J	5
R/W SHEET NO.	

GSOin
5-30-14

NORTH CAROLINA PROFESSIONAL SEAL 26930 ENGINEER GREG S. DAVIS

DIVISION DESIGN / CONSTRUCT ENGINEER

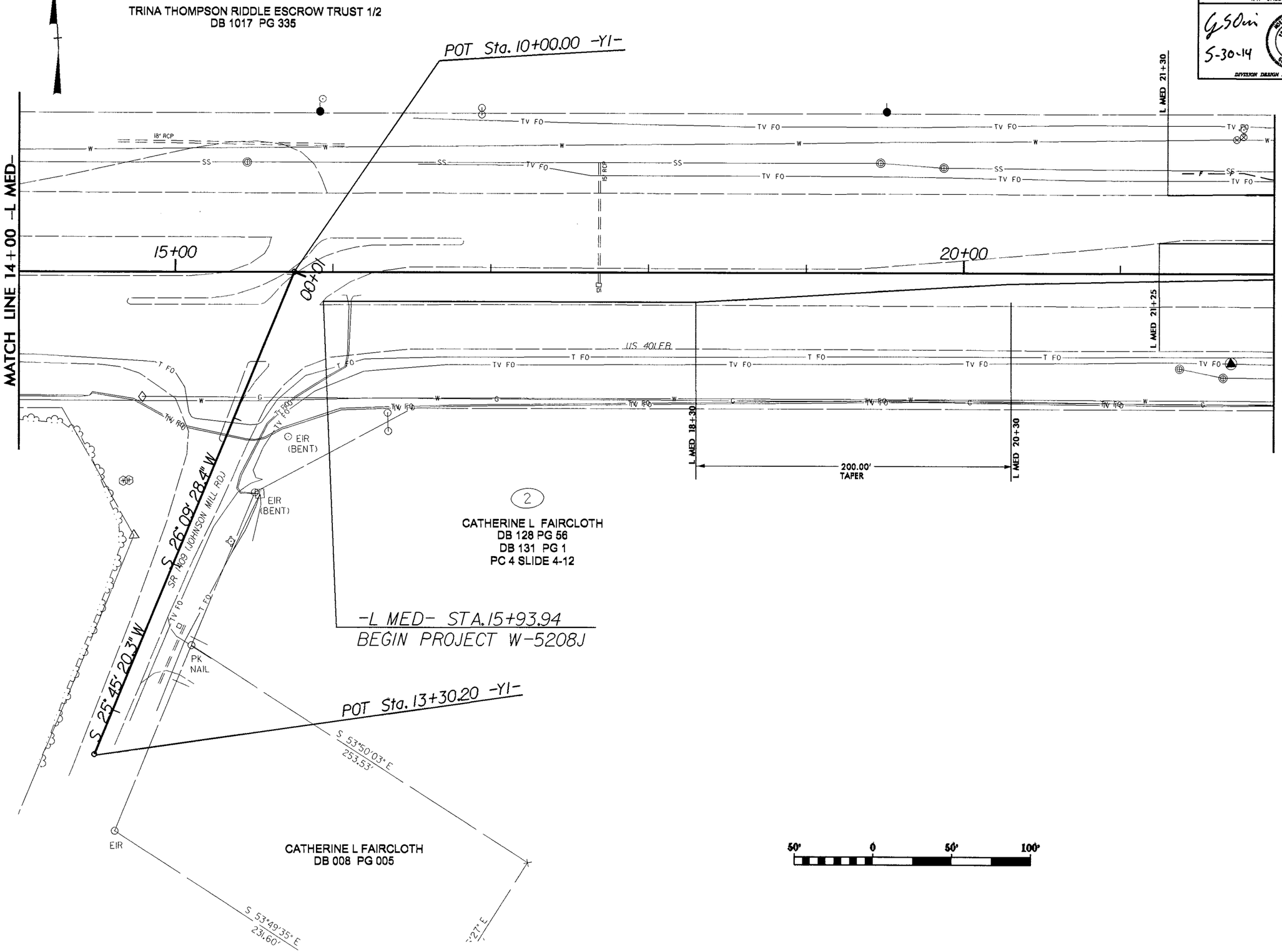

REVISIONS

8/17/99

28-MAY-2014 15:44
C:\div8_projects\rdy\HOKE\nc401esr_1305(wayside_rd)\psh\dsn\W-5208J_psh5.dgn

PROJECT REFERENCE NO.	SHEET NO.
W-5208J	6
R/W SHEET NO.	

5-30-14
DIVISION DESIGN / CONSTRUCT ENGINEER

REVISIONS

8/17/99

(1)

TRINA THOMPSON RIDDLE ESCROW TRUST 1/2
DB 1017 PG 335

CONTRACTOR SHALL WORK IN RIGHT OF WAY IN THIS AREA

CL B RIP RAP
EST. 3 TONS
10 S.Y. GEOTEXTILE

POT Sta. 10+00.00 -Y2-

25+00

ELEV = 104.80

601

310' 18" RCP-IV @ 1.26%

ELEV = 100.88

MATCH LINE 22+00 -L MED

L MED 23+30

180.00' TAPER

L MED 25+10

L MED 25+56

200.00' TAPER

L MED 27+56

US 401WB

602

2GI

603

S 86° 30' 33.6" E 15" RCP

Adj. DI

604

MATCH LINE 30+00 -L MED

US 401EB

34'

-L MED-24+50.00
86.21' RT TCE

-L MED-24+50.00
116.11' RT TCE

L MED 22+64

L MED 24+64

200.00' TAPER

-L MED-26+35.00
86.24' RT TCE

-L MED-26+35.00
116.11' RT TCE

L MED 25+49

L MED 27+49

200.00' TAPER

140.00' TAPER

L MED 28+89

S 3° 50' 20.6" W

S 03°23'58" W
958.42'

(2)

CATHERINE L FAIRCLOTH
DB 128 PG 56
DB 131 PG 1
PC 4 SLIDE 4-12

50' 0 50' 100'

12-JUN-2014 10:46
C:\div8-projects\rdu\HOKE\nc401esr_1305lwayside_rdl\psh\dsn\W-5208J_psh6.dgn

PROJECT REFERENCE NO.	SHEET NO.
W-5208J	6-A
R/W SHEET NO.	

6-30-14

DIVISION DESIGN / CONSTRUCT ENGINEER

NOTE: CONTRACTOR SHALL COORDINATE THE INSTALLATION OF SIGN POST HOLES IN CONCRETE ISLANDS WITH DIVISION 8 TRAFFIC SERVICES UNIT. REFER TO ROADWAY STANDARDS NOs. 901 THRU 904. SIGN HOLES SHALL EXTEND THROUGH PAVEMENT TO NATURAL GROUND.

25+00

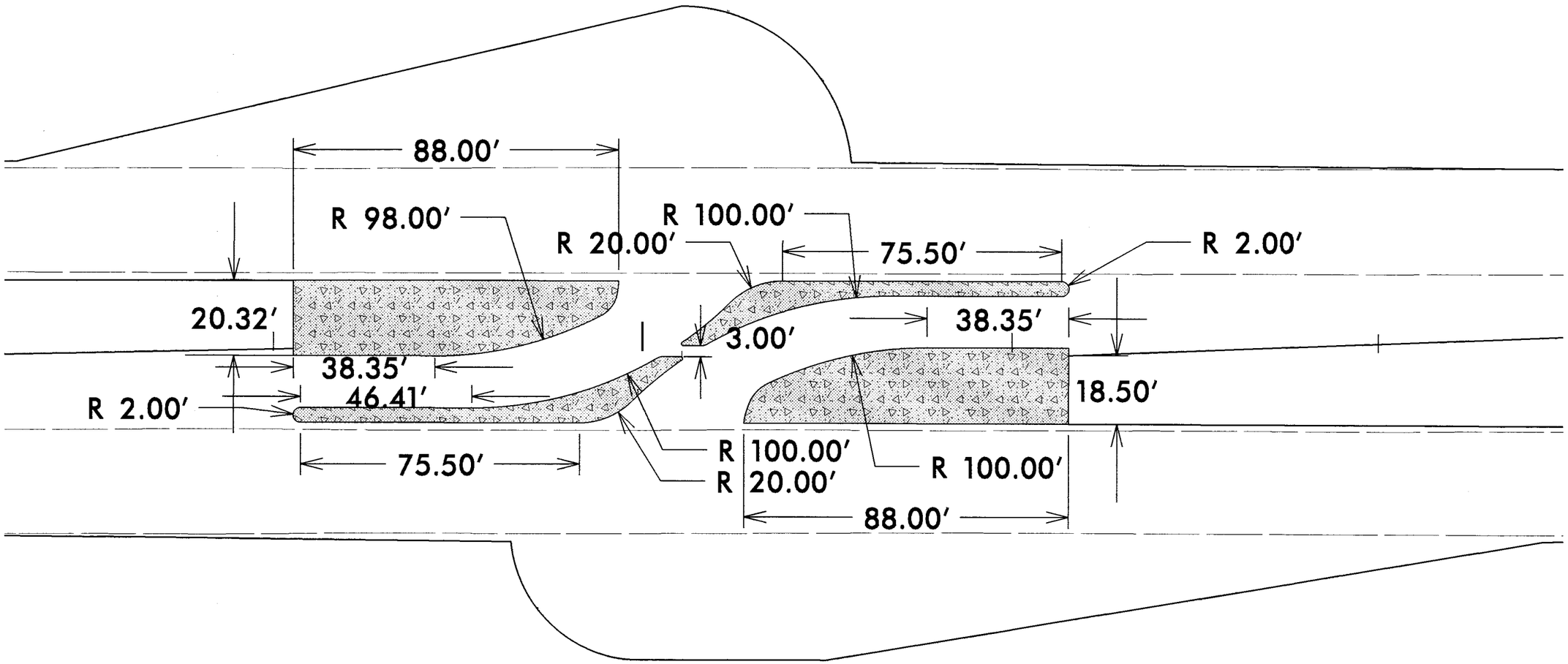



REVISIONS

8/17/99

28-MAY-2014 15:48
$USERNAME
$DATE
$TIME
$DGNFILE
$PRP_DATE
$PRP_TIME
$PRP_DATE
$PRP_TIME
$PRP_DATE
$PRP_TIME

PROJECT REFERENCE NO.	SHEET NO.
W-5208J	7
R/W SHEET NO.	

G. Sorin
5-30-14
NORTH CAROLINA PROFESSIONAL SEAL 26930 ENGINEER GREG J. DAVIS
DIVISION DESIGN / CONSTRUCT ENGINEER

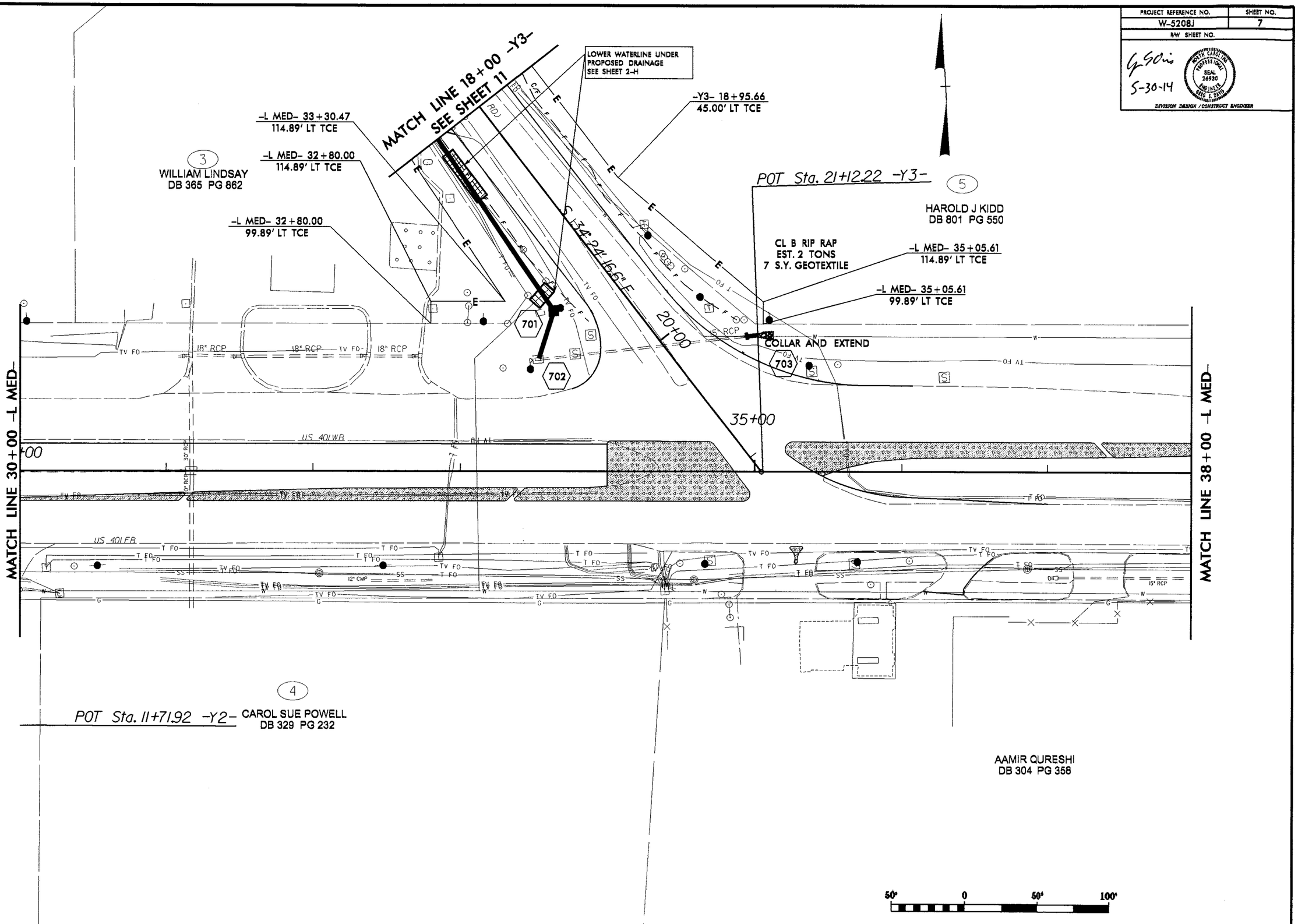

REVISIONS

8/17/99

28-MAY-2014 15:44
C:\div8_projects\rdu\HOKE\nc401esr_1305\wayside_rd\psh\dsn\W-5208J_psh7.dgn

PROJECT REFERENCE NO.	SHEET NO.
W-5208J	7-A
R/W SHEET NO.	

G S Oni
5-30-14

NORTH CAROLINA PROFESSIONAL SEAL 26930 ENGINEER GREG S. DAVIS

DIVISION DESIGN / CONSTRUCT ENGINEER

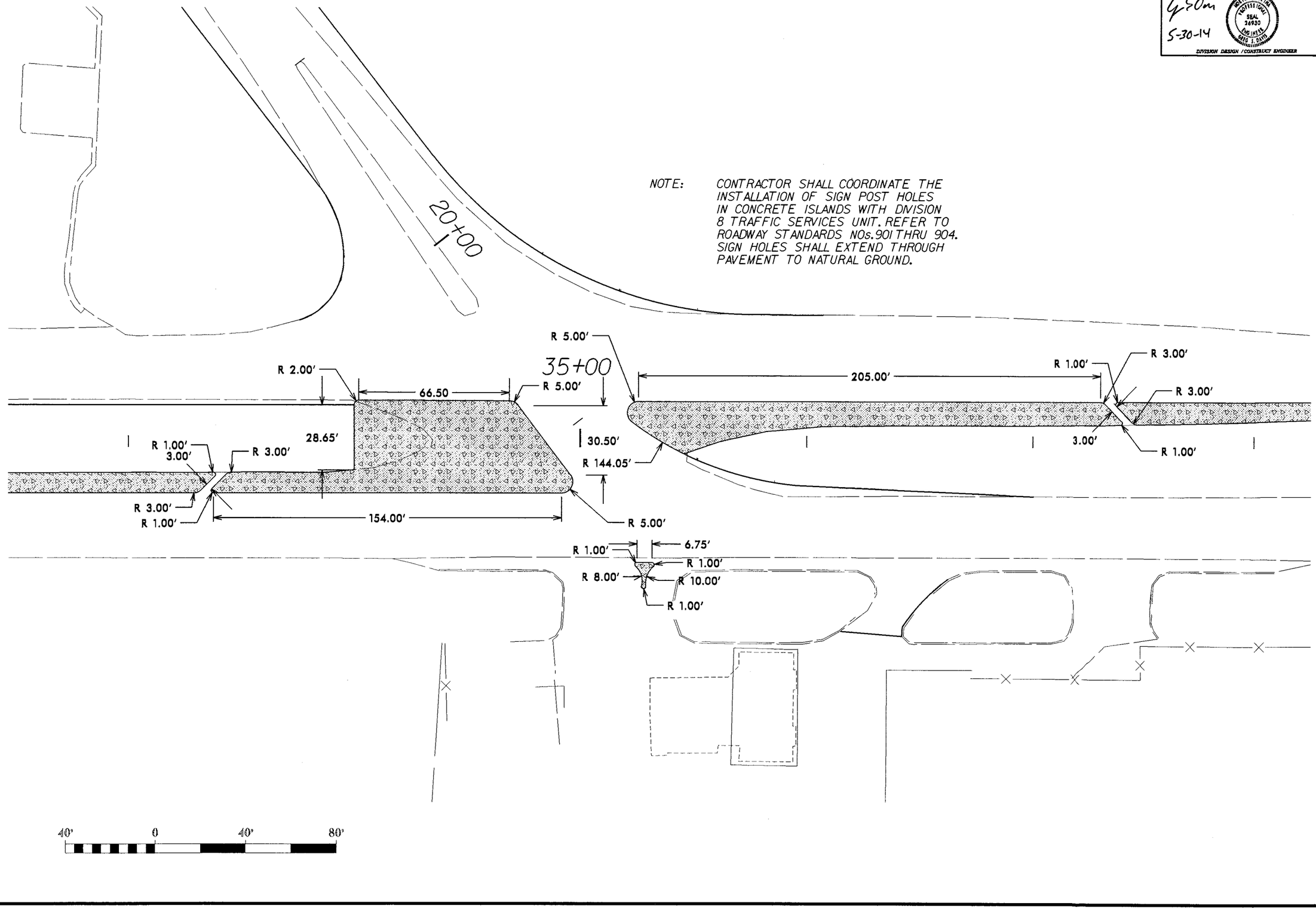

NOTE: CONTRACTOR SHALL COORDINATE THE INSTALLATION OF SIGN POST HOLES IN CONCRETE ISLANDS WITH DIVISION 8 TRAFFIC SERVICES UNIT. REFER TO ROADWAY STANDARDS NOs. 901 THRU 904. SIGN HOLES SHALL EXTEND THROUGH PAVEMENT TO NATURAL GROUND.

REVISIONS

8/17/99

28-MAY-2014 15:39
C:\div8_projects\rdy\HOKE\nc401@sr_1305\wayside_rd\psh\dsn\W-5208J_psh7A.dgn
psdavis AT DOCAD-270410

PROJECT REFERENCE NO.	SHEET NO.
W-5208J	8
R/W SHEET NO.	

5-30-14

DIVISION DESIGN / CONSTRUCT ENGINEER

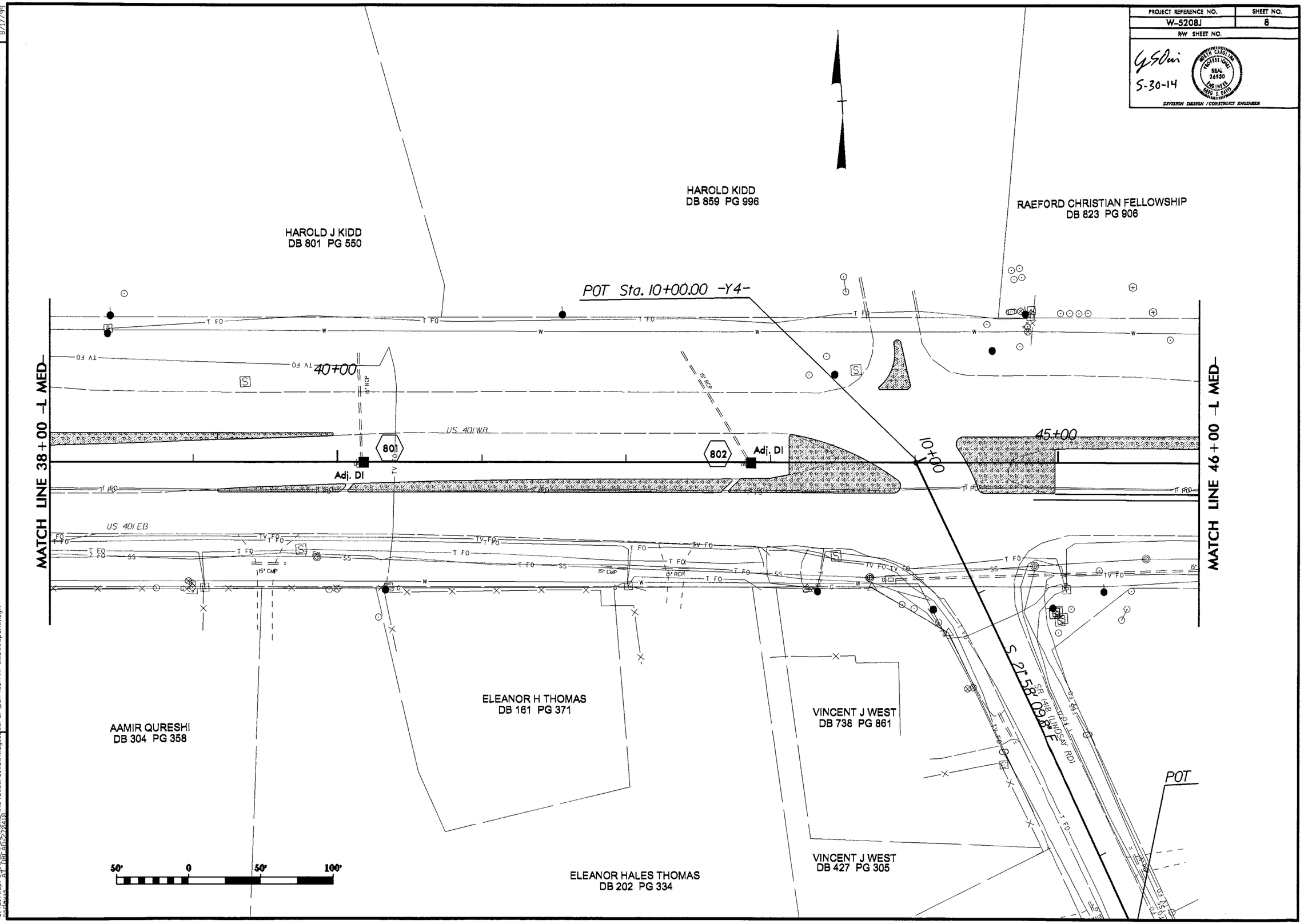

REVISIONS

8/17/99

28-MAY-2014 15:44
C:\div8_projects\rdy\HOKE\nc401@sr_1305(wayside_rd)\psh\dsn\W-5208J_psh8.dgn

PROJECT REFERENCE NO.	SHEET NO.
W-5208J	8-A
R/W SHEET NO.	

5-30-14

NORTH CAROLINA PROFESSIONAL SEAL 26930 ENGINEER GREG S. DAVIS

DIVISION DESIGN / CONSTRUCT ENGINEER

NOTE: CONTRACTOR SHALL COORDINATE THE INSTALLATION OF SIGN POST HOLES IN CONCRETE ISLANDS WITH DIVISION 8 TRAFFIC SERVICES UNIT. REFER TO ROADWAY STANDARDS NOs. 901 THRU 904. SIGN HOLES SHALL EXTEND THROUGH PAVEMENT TO NATURAL GROUND.

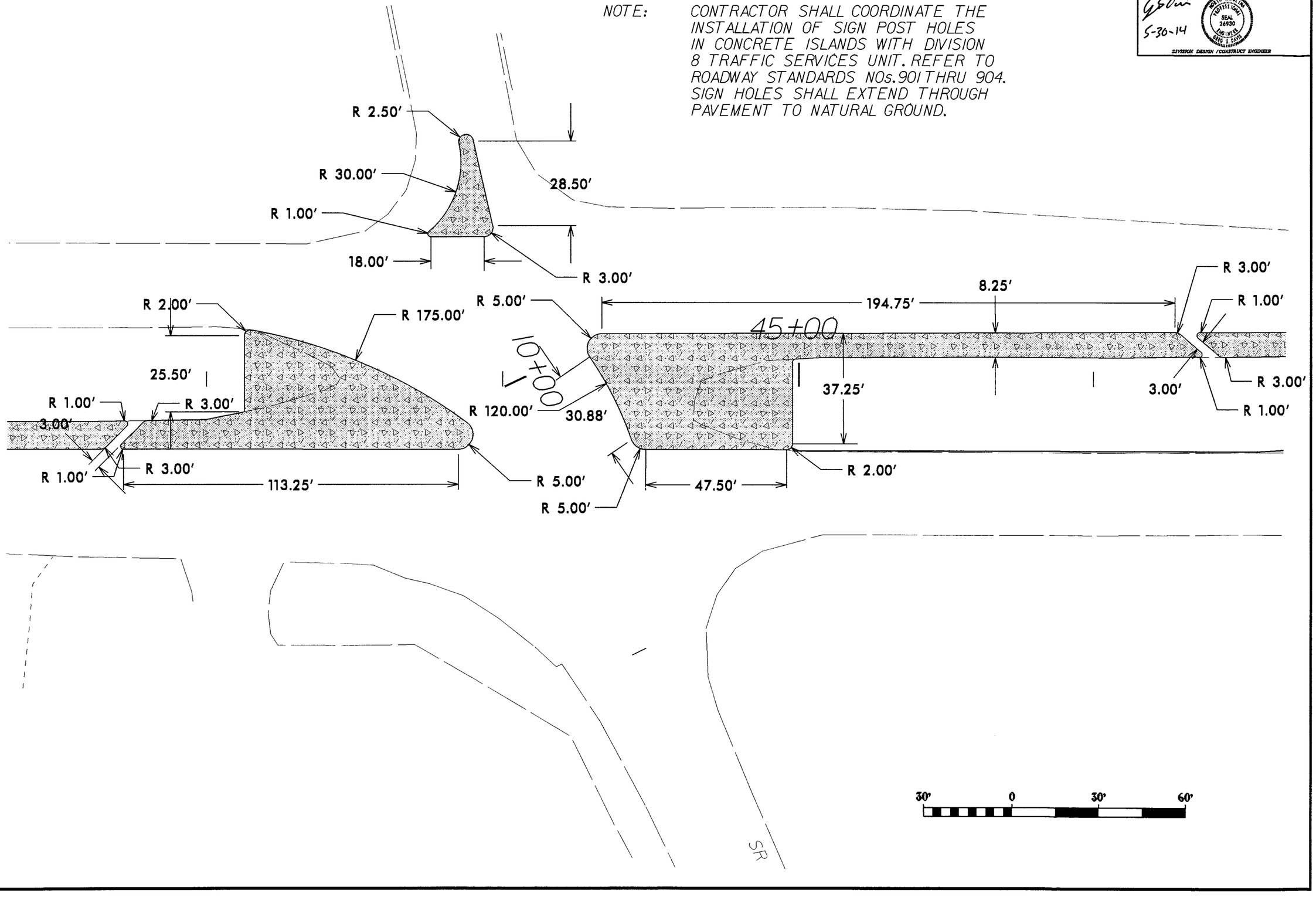

REVISIONS

8/17/99

28-MAY-2014 15:39
C:\div8_projects\rdy\HOKE\nc401esr_1305\wayside_rd\psh\dsn\W-5208J_psh8A.dgn
psdavis AT DRCAD-270410

PROJECT REFERENCE NO.	SHEET NO.
W-5208J	9
R/W SHEET NO.	

G S Davis
5-30-14
NORTH CAROLINA PROFESSIONAL SEAL 26930 ENGINEER GREG S. DAVIS
DIVISION DESIGN / CONSTRUCT ENGINEER

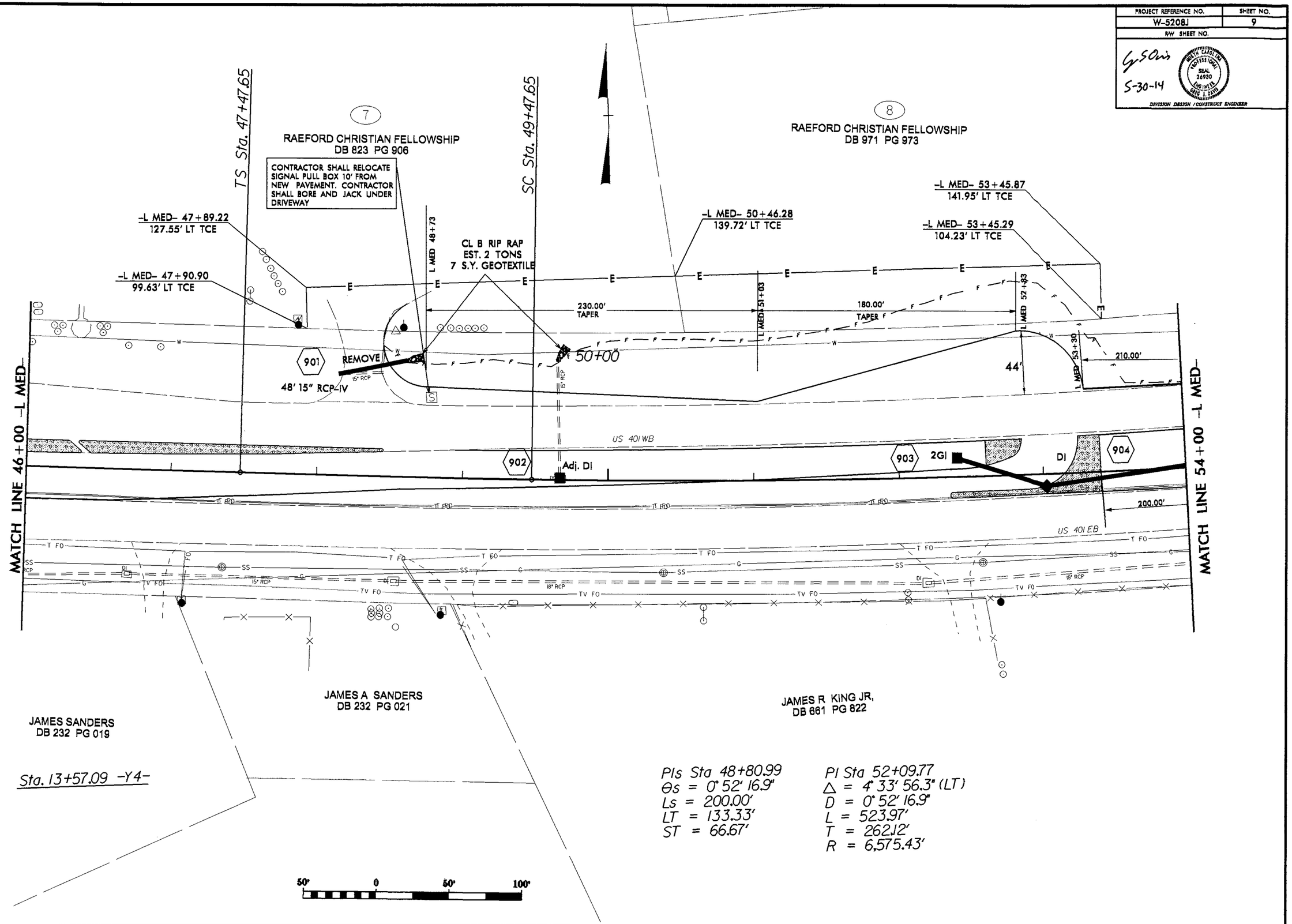

PIs Sta 48+80.99
θs = 0° 52' 16.9"
Ls = 200.00'
LT = 133.33'
ST = 66.67'

PI Sta 52+09.77
Δ = 4° 33' 56.3" (LT)
D = 0° 52' 16.9"
L = 523.97'
T = 262.12'
R = 6,575.43'

REVISIONS

8/17/99

28-MAY-2014 15:44
c:\div8_projects\rdy\HOKE\nc4018sr_1305(wayside_rd)\psh\dsn\W-5208J_psh9.dgn
psdavis A. DRAFT-270410

PROJECT REFERENCE NO.	SHEET NO.
W-5208J	9-A
R/W SHEET NO.	

5-30-14

NORTH CAROLINA PROFESSIONAL SEAL 26930 ENGINEER GREG J. DAVIS

DIVISION DESIGN / CONSTRUCT ENGINEER

REVISIONS

8/17/99

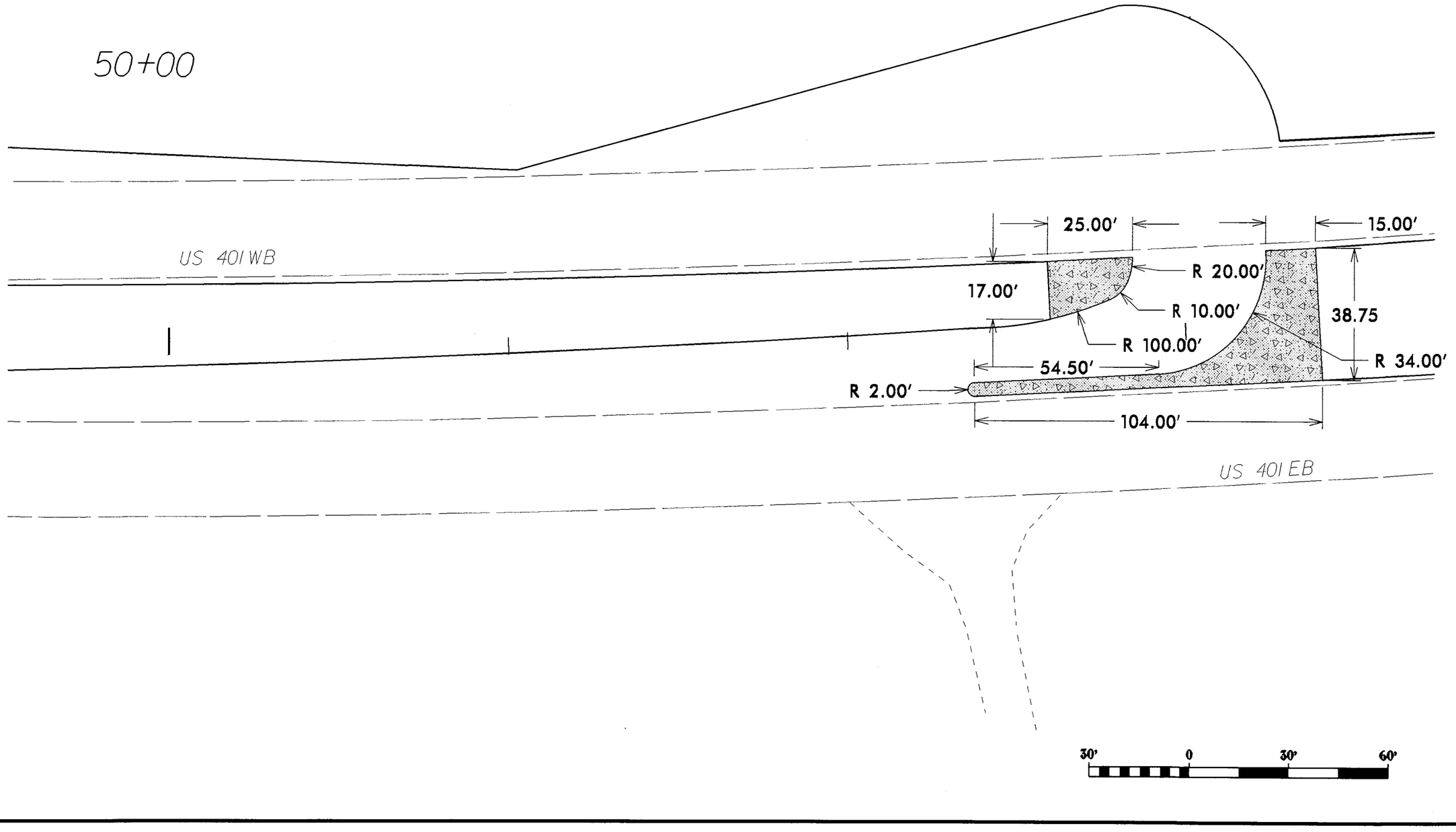

28-MAY-2014 15:39
C:\div8_projects\rdy\HOKE\nc401esr_1305(waysiae_rd)\psh\dsn\W-5208J_psh9A.dgn
psdavis, AT DACAD-270410

PROJECT REFERENCE NO.	SHEET NO.
W-5208J	10
R/W SHEET NO.	

5-30-14

DIVISION DESIGN / CONSTRUCT ENGINEER

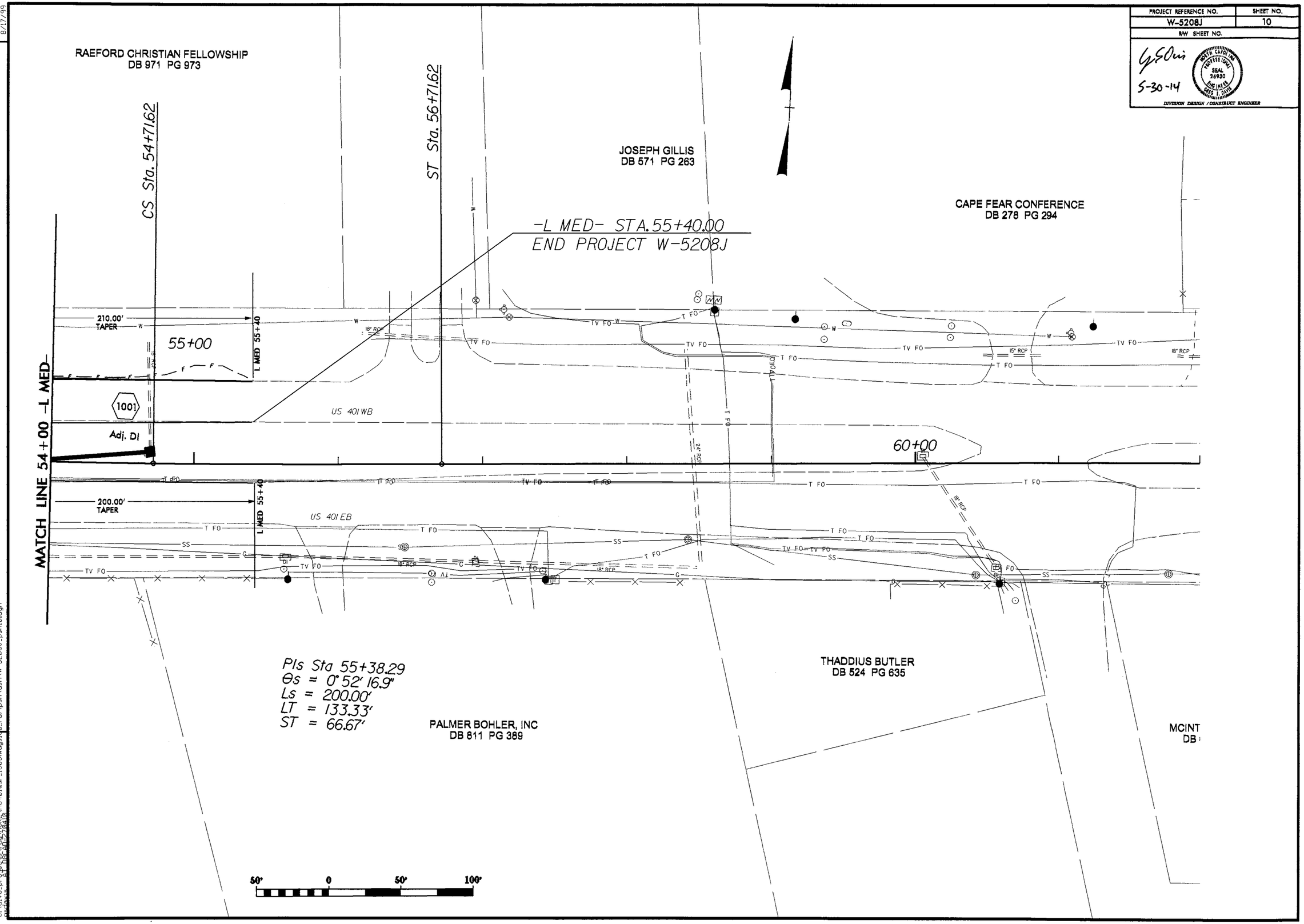

REVISIONS

8/17/99

28-MAY-2014 15:44
C:\div8_projects\rdy\HOKE\nc401esr_1305(wayside_rd)\psh\dsn\W-5208J_psh10.dgn

PROJECT REFERENCE NO.	SHEET NO.
W-5208J	11
R/W SHEET NO.	

S-30-14

DIVISION ENGINEER / CONSTRUCT ENGINEER

REVISIONS

8/17/99

POT Sta. 10+00.00 -Y3-

9

CAROLINA TELEPHONE & TELE
DB 300 PG 774

HAROLD J KIDD
DB 801 PG 550

-Y3- 12+06.29
45.00' LT TCE

-Y3- 12+08.20
30.00' LT TCE

CL B RIP RAP
EST. 5 TONS
14 S.Y. GEOTEXTILE

15" RCP

24" RCP

00

15+00

S 36° 16' 42.7" E

PI Sta. 17+38.81 -Y3-

-Y3- 17+38.81
45.01' LT TCE

14'

SR 1305 (WAYSIDE RD.)

SR 1305 (WAYSIDE

COLLAR AND EXTEND

1101

-Y3- 15+84.14
45.00' RT TCE

-Y3- 15+16
BEGIN WIDENING RT

18" RCP

2GI

REMOVE

1102

-Y3- 15+84.00
30.00' RT TCE

-Y3- 16+58.13
45.00' RT TCE

CONTRACTOR SHALL WORK IN RIGHT OF WAY
IN THIS AREA

MATCH LINE 18+00 -Y3-
SEE SHEET 7

TRINA THOMPSON RIDDLE ESCROW TRUST 1/2
DB 1017 PG 335

-Y3- STA. 10+51.70
BEGIN PROJECT W-5208J

3

WILLIAM LINDSAY
DB 365 PG 862

50' 0 50' 100'

12-JUN-2014 10:46
C:\div\8_projects\roddy\HOKE\nc401bsr_1305\wayside_rd\psh\dsn\W-5208J_pshi1.dgn

PROJECT REFERENCE NO.	SHEET NO.
W-5208J	PMP-1
RW SHEET NO.	

5-30-14

DIVISION DESIGN / CONSTRUCT ENGINEER

PAVEMENT MARKING LEGEND

- ◨ --CRYSTAL / RED PAVEMENT MARKER
- ◆ --YELLOW / YELLOW PAVEMENT MARKER
- □ --CRYSTAL / CRYSTAL PAVEMENT MARKER

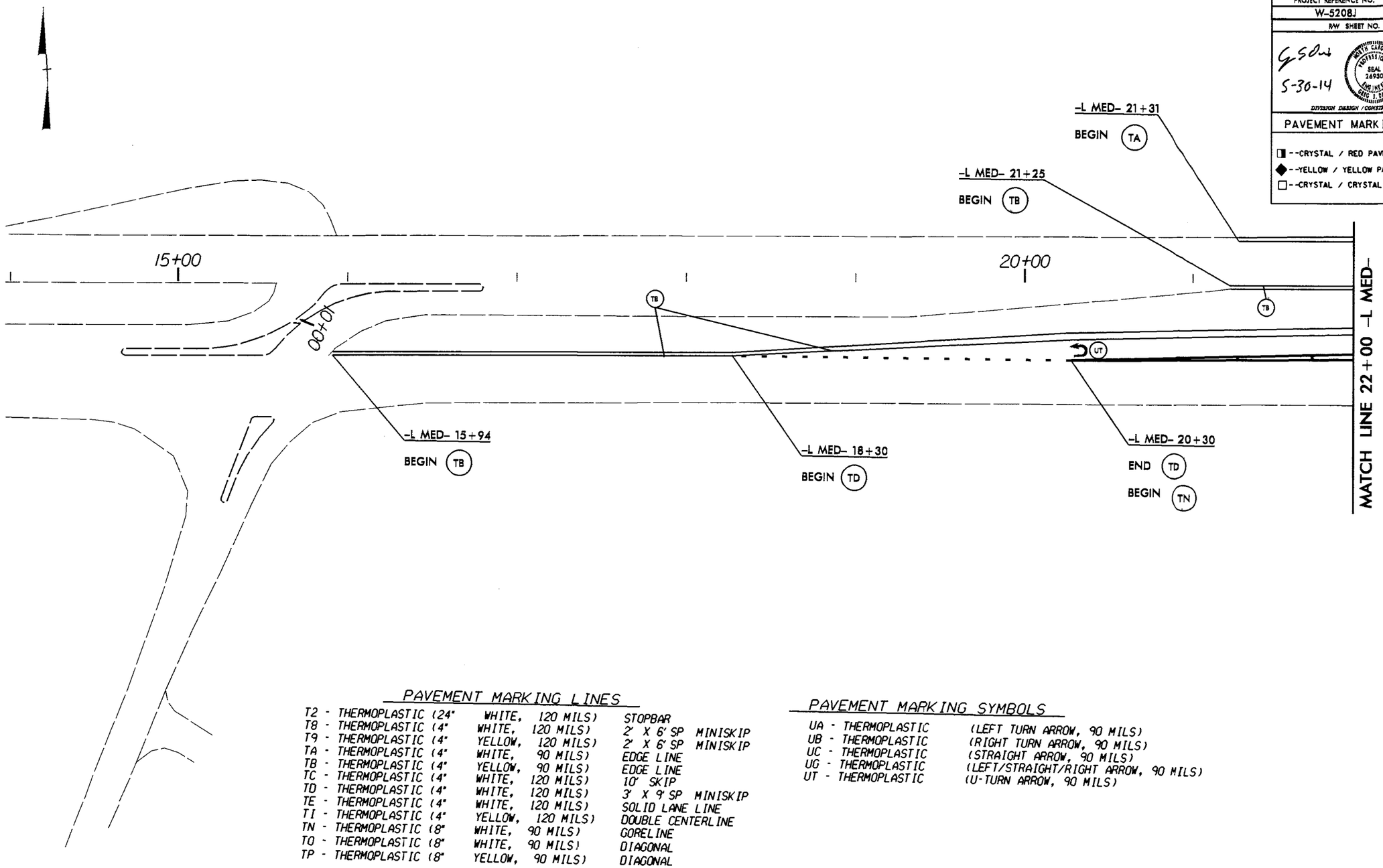

PAVEMENT MARKING LINES

T2 - THERMOPLASTIC (24"	WHITE,	120 MILS)	STOPBAR
T8 - THERMOPLASTIC (4"	WHITE,	120 MILS)	2' X 6' SP MINISKIP
T9 - THERMOPLASTIC (4"	YELLOW,	120 MILS)	2' X 6' SP MINISKIP
TA - THERMOPLASTIC (4"	WHITE,	90 MILS)	EDGE LINE
TB - THERMOPLASTIC (4"	YELLOW,	90 MILS)	EDGE LINE
TC - THERMOPLASTIC (4"	WHITE,	120 MILS)	10' SKIP
TD - THERMOPLASTIC (4"	WHITE,	120 MILS)	3' X 9' SP MINISKIP
TE - THERMOPLASTIC (4"	WHITE,	120 MILS)	SOLID LANE LINE
TI - THERMOPLASTIC (4"	YELLOW,	120 MILS)	DOUBLE CENTERLINE
TN - THERMOPLASTIC (8"	WHITE,	90 MILS)	GORELINE
TO - THERMOPLASTIC (8"	WHITE,	90 MILS)	DIAGONAL
TP - THERMOPLASTIC (8"	YELLOW,	90 MILS)	DIAGONAL

PAVEMENT MARKING SYMBOLS

UA - THERMOPLASTIC	(LEFT TURN ARROW, 90 MILS)
UB - THERMOPLASTIC	(RIGHT TURN ARROW, 90 MILS)
UC - THERMOPLASTIC	(STRAIGHT ARROW, 90 MILS)
UG - THERMOPLASTIC	(LEFT/STRAIGHT/RIGHT ARROW, 90 MILS)
UT - THERMOPLASTIC	(U-TURN ARROW, 90 MILS)

50' 0 50' 100'

REVISIONS 8/17/99

28-MAY-2014 15:30
c:\projects\rdu\HOKE\rc4018sr_1305\wayside_rd\psh\pmpW-5208J_pmp_psh_1.dgn
default 8 1 bardan=270410

PROJECT REFERENCE NO.	SHEET NO.
W-5208J	PMP-2
R/W SHEET NO.	

5-30-14

NORTH CAROLINA PROFESSIONAL SEAL 26930 ENGINEER GREG J. DAVIS

DIVISION DESIGN / CONSTRUCT ENGINEER

PAVEMENT MARKING LINES

T2 - THERMOPLASTIC	(24" WHITE,	120 MILS)	STOPBAR
T8 - THERMOPLASTIC	(4" WHITE,	120 MILS)	2' X 6' SP MINISKIP
T9 - THERMOPLASTIC	(4" YELLOW,	120 MILS)	2' X 6' SP MINISKIP
TA - THERMOPLASTIC	(4" WHITE,	90 MILS)	EDGE LINE
TB - THERMOPLASTIC	(4" YELLOW,	90 MILS)	EDGE LINE
TC - THERMOPLASTIC	(4" WHITE,	120 MILS)	10' SKIP
TD - THERMOPLASTIC	(4" WHITE,	120 MILS)	3' X 9' SP MINISKIP
TE - THERMOPLASTIC	(4" WHITE,	120 MILS)	SOLID LANE LINE
TI - THERMOPLASTIC	(4" YELLOW,	120 MILS)	DOUBLE CENTERLINE
TN - THERMOPLASTIC	(8" WHITE,	90 MILS)	GORELINE
TO - THERMOPLASTIC	(8" WHITE,	90 MILS)	DIAGONAL
TP - THERMOPLASTIC	(8" YELLOW,	90 MILS)	DIAGONAL

PAVEMENT MARKING SYMBOLS

UA - THERMOPLASTIC	(LEFT TURN ARROW, 90 MILS)
UB - THERMOPLASTIC	(RIGHT TURN ARROW, 90 MILS)
UC - THERMOPLASTIC	(STRAIGHT ARROW, 90 MILS)
UG - THERMOPLASTIC	(LEFT/STRAIGHT/RIGHT ARROW, 90 MILS)
UT - THERMOPLASTIC	(U-TURN ARROW, 90 MILS)

PAVEMENT MARKING LEGEND

- ◧ --CRYSTAL / RED PAVEMENT MARKER
- ◆ --YELLOW / YELLOW PAVEMENT MARKER
- □ --CRYSTAL / CRYSTAL PAVEMENT MARKER

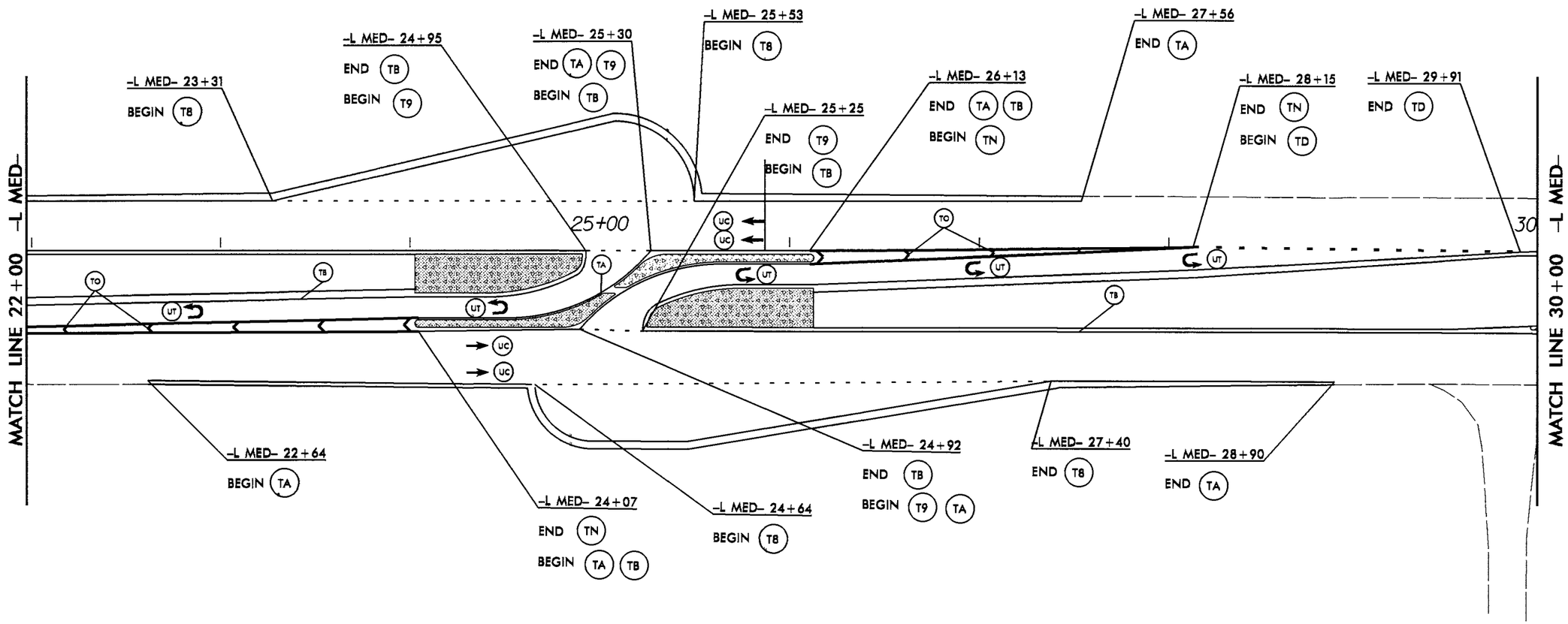

REVISIONS

8/17/99

28-MAY-2014 15:30
C:\div8_projects\rdy\HOKE\nc401esr_1305(wayside_rd)\psh\pmp\W-5208J_pmp_psh_2.dgn
psdavis AL DBCAD-270410

PROJECT REFERENCE NO.	SHEET NO.
W-5208J	PMP-3
R/W SHEET NO.	

5-30-14

DIVISION DESIGN / CONSTRUCT ENGINEER

PAVEMENT MARKING LEGEND

- --CRYSTAL / RED PAVEMENT MARKER
- --YELLOW / YELLOW PAVEMENT MARKER
- --CRYSTAL / CRYSTAL PAVEMENT MARKER

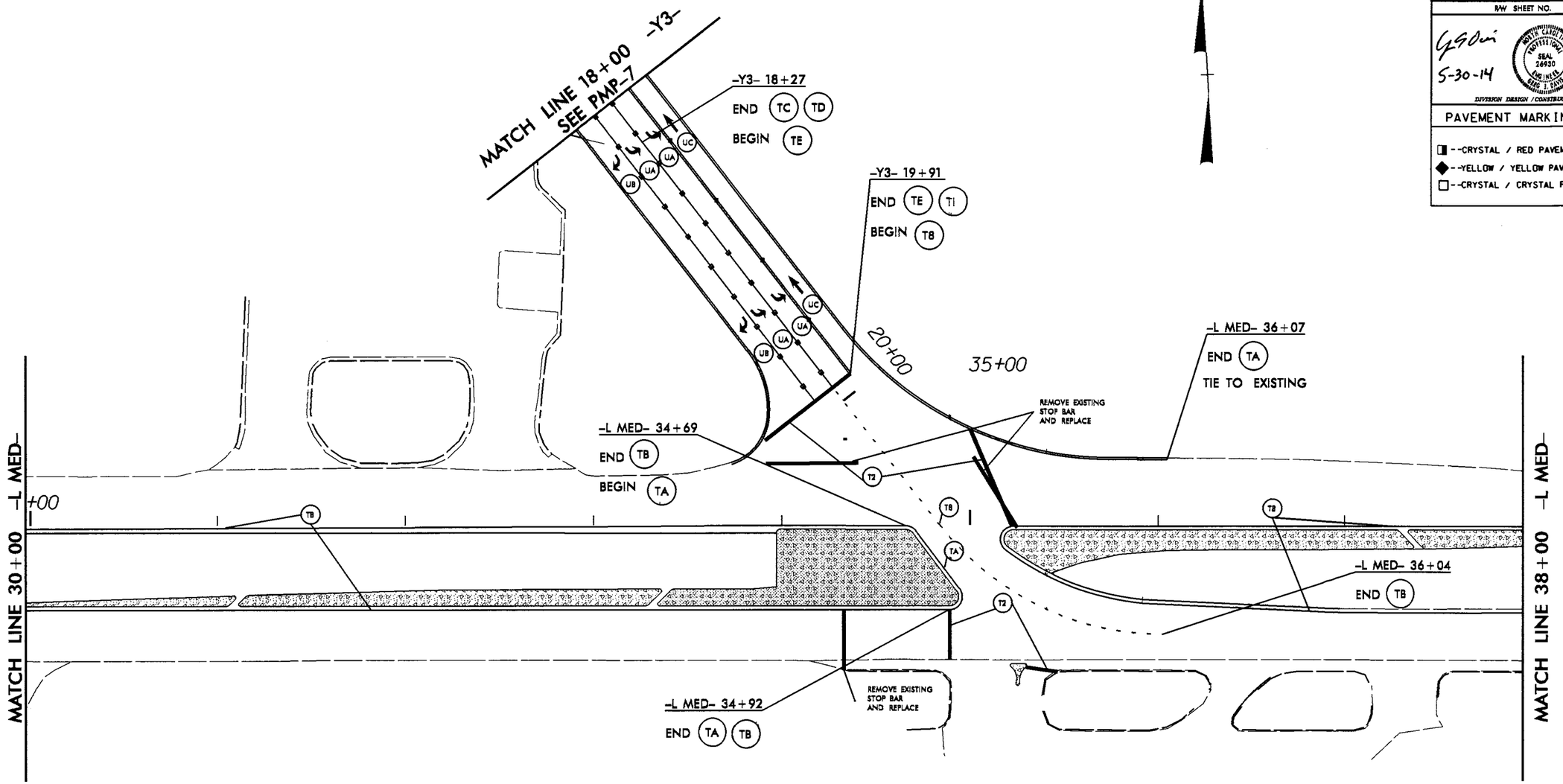

PAVEMENT MARKING LINES

T2 - THERMOPLASTIC (24"	WHITE,	120 MILS)	STOPBAR
T8 - THERMOPLASTIC (4"	WHITE,	120 MILS)	2' X 6' SP MINISKIP
T9 - THERMOPLASTIC (4"	YELLOW,	120 MILS)	2' X 6' SP MINISKIP
TA - THERMOPLASTIC (4"	WHITE,	90 MILS)	EDGE LINE
TB - THERMOPLASTIC (4"	YELLOW,	90 MILS)	EDGE LINE
TC - THERMOPLASTIC (4"	WHITE,	120 MILS)	10' SKIP
TD - THERMOPLASTIC (4"	WHITE,	120 MILS)	3' X 9' SP MINISKIP
TE - THERMOPLASTIC (4"	WHITE,	120 MILS)	SOLID LANE LINE
TI - THERMOPLASTIC (4"	YELLOW,	120 MILS)	DOUBLE CENTERLINE
TN - THERMOPLASTIC (8"	WHITE,	90 MILS)	GORELINE
TO - THERMOPLASTIC (8"	WHITE,	90 MILS)	DIAGONAL
TP - THERMOPLASTIC (8"	YELLOW,	90 MILS)	DIAGONAL

PAVEMENT MARKING SYMBOLS

UA - THERMOPLASTIC	(LEFT TURN ARROW, 90 MILS)
UB - THERMOPLASTIC	(RIGHT TURN ARROW, 90 MILS)
UC - THERMOPLASTIC	(STRAIGHT ARROW, 90 MILS)
UG - THERMOPLASTIC	(LEFT/STRAIGHT/RIGHT ARROW, 90 MILS)
UT - THERMOPLASTIC	(U-TURN ARROW, 90 MILS)

50' 0 50' 100'

REVISIONS

8/17/99

28-MAY-2014 15:30
C:\Users\cdavis\Desktop\cdavis\HOKE\vnc401tsr_13051waysides_rdi\psh\pmp\W-5208J_pmp_psh_3.dgn

PROJECT REFERENCE NO.	SHEET NO.
W-5208J	PMP-4
R/W SHEET NO.	

G S Oui
5-30-14

NORTH CAROLINA PROFESSIONAL SEAL 26930 ENGINEER GREG J. DAVIS

DIVISION DESIGN / CONSTRUCT ENGINEER

PAVEMENT MARKING LINES

T2 - THERMOPLASTIC	(24"	WHITE, 120 MILS)	STOPBAR
T8 - THERMOPLASTIC	(4"	WHITE, 120 MILS)	2' X 6' SP MINISKIP
T9 - THERMOPLASTIC	(4"	YELLOW, 120 MILS)	2' X 6' SP MINISKIP
TA - THERMOPLASTIC	(4"	WHITE, 90 MILS)	EDGE LINE
TB - THERMOPLASTIC	(4"	YELLOW, 90 MILS)	EDGE LINE
TC - THERMOPLASTIC	(4"	WHITE, 120 MILS)	10' SKIP
TD - THERMOPLASTIC	(4"	WHITE, 120 MILS)	3' X 9' SP MINISKIP
TE - THERMOPLASTIC	(4"	WHITE, 120 MILS)	SOLID LANE LINE
TI - THERMOPLASTIC	(4"	YELLOW, 120 MILS)	DOUBLE CENTERLINE
TN - THERMOPLASTIC	(8"	WHITE, 90 MILS)	GORELINE
TO - THERMOPLASTIC	(8"	WHITE, 90 MILS)	DIAGONAL
TP - THERMOPLASTIC	(8"	YELLOW, 90 MILS)	DIAGONAL

PAVEMENT MARKING SYMBOLS

UA - THERMOPLASTIC	(LEFT TURN ARROW, 90 MILS)
UB - THERMOPLASTIC	(RIGHT TURN ARROW, 90 MILS)
UC - THERMOPLASTIC	(STRAIGHT ARROW, 90 MILS)
UG - THERMOPLASTIC	(LEFT/STRAIGHT/RIGHT ARROW, 90 MILS)
UT - THERMOPLASTIC	(U-TURN ARROW, 90 MILS)

PAVEMENT MARKING LEGEND

- ◧ --CRYSTAL / RED PAVEMENT MARKER
- ◆ --YELLOW / YELLOW PAVEMENT MARKER
- □ --CRYSTAL / CRYSTAL PAVEMENT MARKER

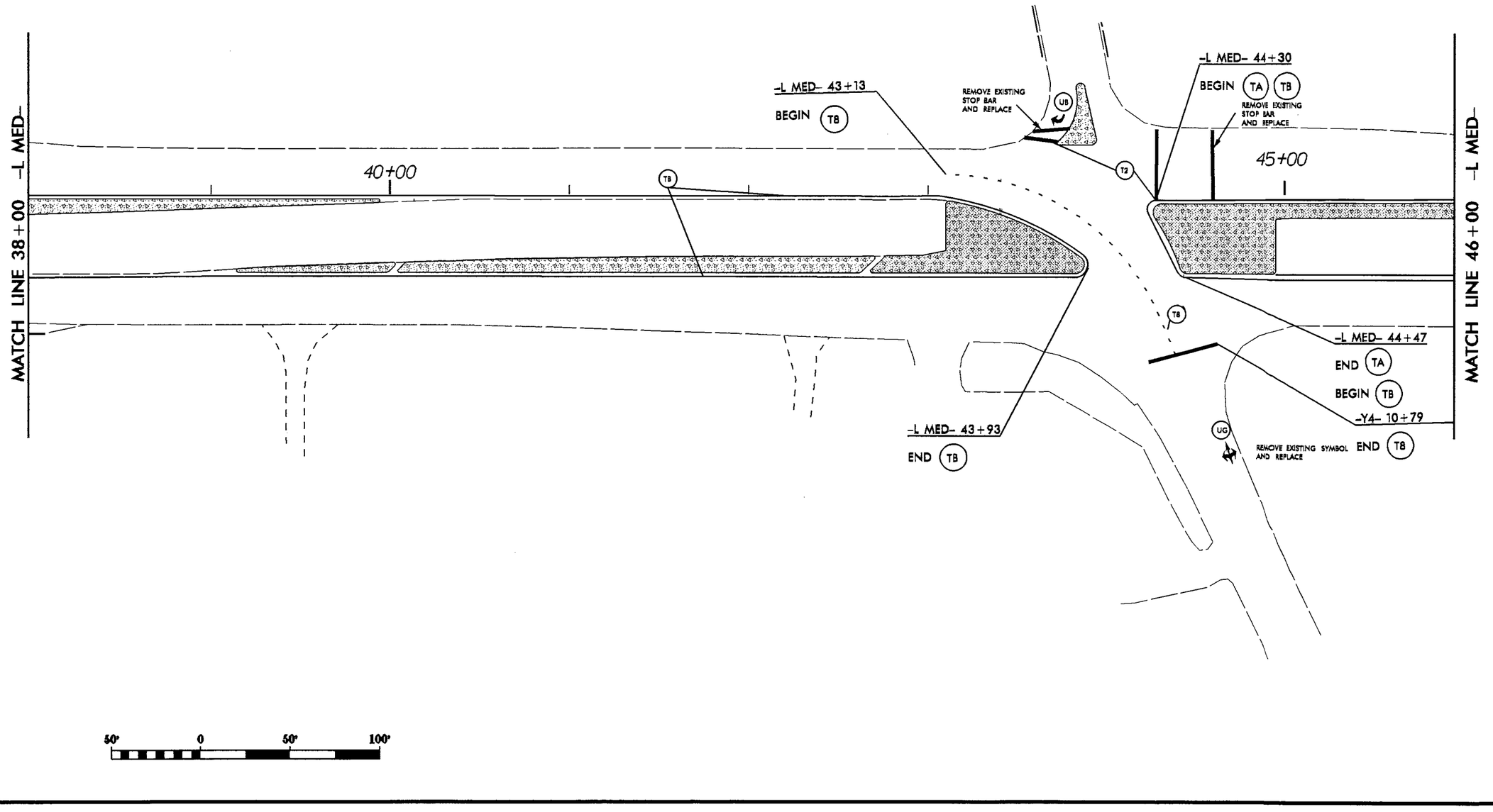

REVISIONS

8/17/99

28-MAY-2014 15:30
c:\div8_projects\rdy\HOKE\nc401@sr_1305(wayside_rd)\psh\pmp\W-5208J_pmp_psh_4.dgn
psdavis AT DBCAD-270410

PROJECT REFERENCE NO.	SHEET NO.
W-5208J	PMP-5
R/W SHEET NO.	

5-30-14

DIVISION ENGINEER / CONSTRUCT ENGINEER

PAVEMENT MARKING LINES

T2 - THERMOPLASTIC (24"	WHITE,	120 MILS)	STOPBAR
T8 - THERMOPLASTIC (4"	WHITE,	120 MILS)	2' X 6' SP MINISKIP
T9 - THERMOPLASTIC (4"	YELLOW,	120 MILS)	2' X 6' SP MINISKIP
TA - THERMOPLASTIC (4"	WHITE,	90 MILS)	EDGE LINE
TB - THERMOPLASTIC (4"	YELLOW,	90 MILS)	EDGE LINE
TC - THERMOPLASTIC (4"	WHITE,	120 MILS)	10' SKIP
TD - THERMOPLASTIC (4"	WHITE,	120 MILS)	3' X 9' SP MINISKIP
TE - THERMOPLASTIC (4"	WHITE,	120 MILS)	SOLID LANE LINE
TI - THERMOPLASTIC (4"	YELLOW,	120 MILS)	DOUBLE CENTERLINE
TN - THERMOPLASTIC (8"	WHITE,	90 MILS)	GORELINE
TO - THERMOPLASTIC (8"	WHITE,	90 MILS)	DIAGONAL
TP - THERMOPLASTIC (8"	YELLOW,	90 MILS)	DIAGONAL

PAVEMENT MARKING SYMBOLS

UA - THERMOPLASTIC	(LEFT TURN ARROW, 90 MILS)
UB - THERMOPLASTIC	(RIGHT TURN ARROW, 90 MILS)
UC - THERMOPLASTIC	(STRAIGHT ARROW, 90 MILS)
UG - THERMOPLASTIC	(LEFT/STRAIGHT/RIGHT ARROW, 90 MILS)
UT - THERMOPLASTIC	(U-TURN ARROW, 90 MILS)

PAVEMENT MARKING LEGEND

- --CRYSTAL / RED PAVEMENT MARKER
- --YELLOW / YELLOW PAVEMENT MARKER
- --CRYSTAL / CRYSTAL PAVEMENT MARKER

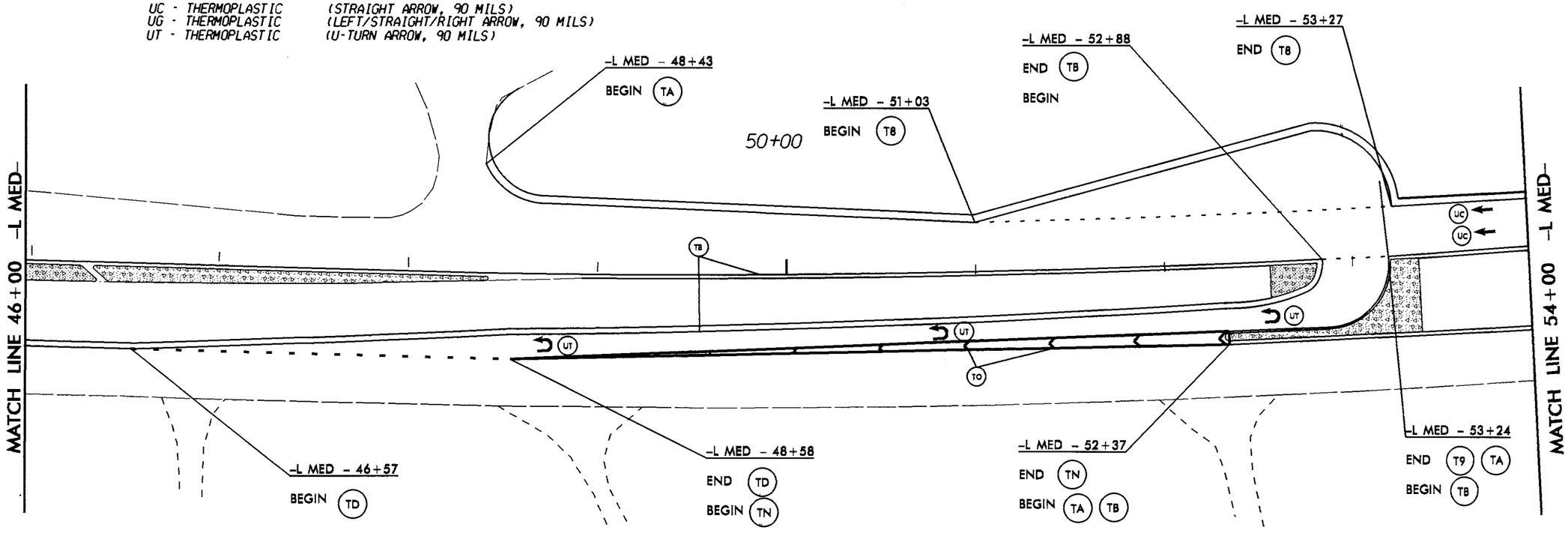

50' 0 50' 100'

REVISIONS

8/17/99

28-MAY-2014 15:30
C:\dn\8_projects\rdu\HOKE\nc401esr_1305\wayside_rd\pmp\W-5208J_pmp_psh_5.dgn
$$USER: Ashley Hall

PROJECT REFERENCE NO.	SHEET NO.
W-5208J	PMP-6
R/W SHEET NO.	

5-30-14

DIVISION DESIGN / CONSTRUCT ENGINEER

PAVEMENT MARKING LINES

T2 -	THERMOPLASTIC (24"	WHITE,	120 MILS)	STOPBAR
T8 -	THERMOPLASTIC (4"	WHITE,	120 MILS)	2' X 6' SP MINISKIP
T9 -	THERMOPLASTIC (4"	YELLOW,	120 MILS)	2' X 6' SP MINISKIP
TA -	THERMOPLASTIC (4"	WHITE,	90 MILS)	EDGE LINE
TB -	THERMOPLASTIC (4"	YELLOW,	90 MILS)	EDGE LINE
TC -	THERMOPLASTIC (4"	WHITE,	120 MILS)	10' SKIP
TD -	THERMOPLASTIC (4"	WHITE,	120 MILS)	3' X 9' SP MINISKIP
TE -	THERMOPLASTIC (4"	WHITE,	120 MILS)	SOLID LANE LINE
TI -	THERMOPLASTIC (4"	YELLOW,	120 MILS)	DOUBLE CENTERLINE
TN -	THERMOPLASTIC (8"	WHITE,	90 MILS)	GORELINE
TO -	THERMOPLASTIC (8"	WHITE,	90 MILS)	DIAGONAL
TP -	THERMOPLASTIC (8"	YELLOW,	90 MILS)	DIAGONAL

PAVEMENT MARKING SYMBOLS

UA -	THERMOPLASTIC	(LEFT TURN ARROW, 90 MILS)
UB -	THERMOPLASTIC	(RIGHT TURN ARROW, 90 MILS)
UC -	THERMOPLASTIC	(STRAIGHT ARROW, 90 MILS)
UG -	THERMOPLASTIC	(LEFT/STRAIGHT/RIGHT ARROW, 90 MILS)
UT -	THERMOPLASTIC	(U-TURN ARROW, 90 MILS)

PAVEMENT MARKING LEGEND

- --CRYSTAL / RED PAVEMENT MARKER
- --YELLOW / YELLOW PAVEMENT MARKER
- --CRYSTAL / CRYSTAL PAVEMENT MARKER

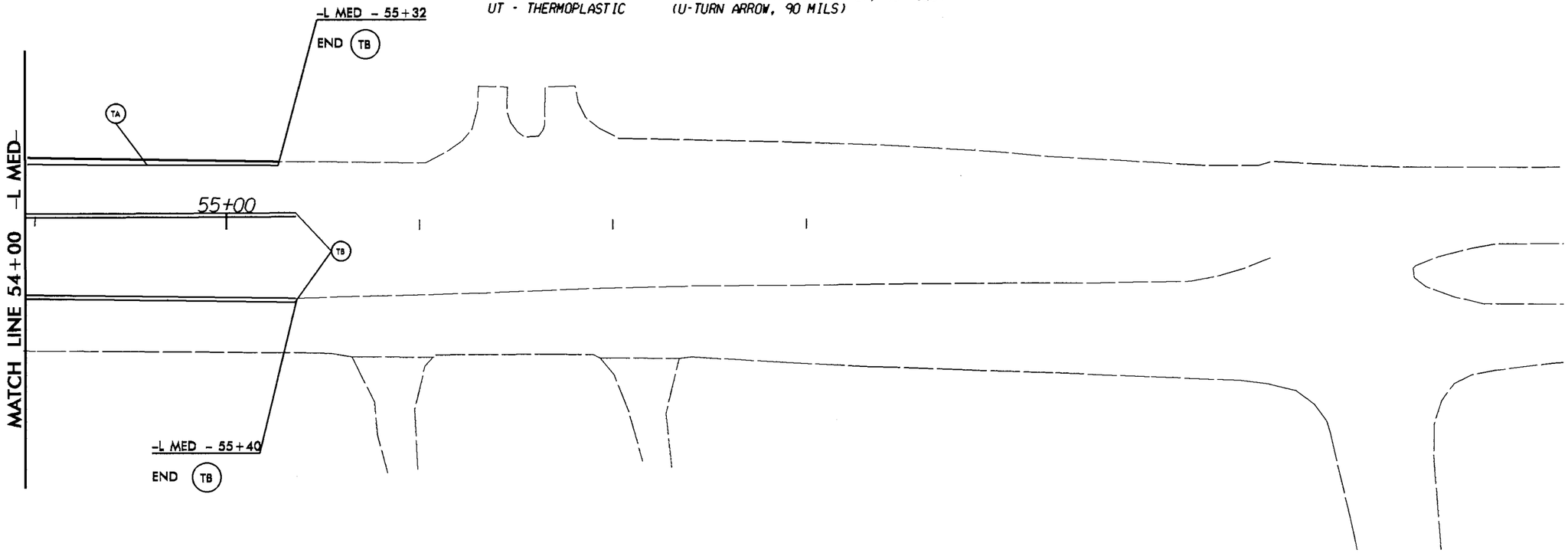

50' 0 50' 100'

REVISIONS

28-MAY-2014 15:39
C:\div8_projects\rdu\HOKE\nc401bsr_1305\wayside_rd\psh\pmp\W-5208J_pmp_psh_6.dgn

PROJECT REFERENCE NO.	SHEET NO.
W-5208J	PMP-7
R/W SHEET NO.	

G S Davis
5-30-14

NORTH CAROLINA PROFESSIONAL SEAL 26930 ENGINEER GREG S. DAVIS

DIVISION DESIGN / CONSTRUCT ENGINEER

PAVEMENT MARKING LINES

T2 - THERMOPLASTIC	(24"	WHITE, 120 MILS)	STOPBAR
T8 - THERMOPLASTIC	(4"	WHITE, 120 MILS)	2' X 6' SP MINISKIP
T9 - THERMOPLASTIC	(4"	YELLOW, 120 MILS)	2' X 6' SP MINISKIP
TA - THERMOPLASTIC	(4"	WHITE, 90 MILS)	EDGE LINE
TB - THERMOPLASTIC	(4"	YELLOW, 90 MILS)	EDGE LINE
TC - THERMOPLASTIC	(4"	WHITE, 120 MILS)	10' SKIP
TD - THERMOPLASTIC	(4"	WHITE, 120 MILS)	3' X 9' SP MINISKIP
TE - THERMOPLASTIC	(4"	WHITE, 120 MILS)	SOLID LANE LINE
TI - THERMOPLASTIC	(4"	YELLOW, 120 MILS)	DOUBLE CENTERLINE
TN - THERMOPLASTIC	(8"	WHITE, 90 MILS)	GORELINE
TO - THERMOPLASTIC	(8"	WHITE, 90 MILS)	DIAGONAL
TP - THERMOPLASTIC	(8"	YELLOW, 90 MILS)	DIAGONAL

PAVEMENT MARKING SYMBOLS

UA - THERMOPLASTIC	(LEFT TURN ARROW, 90 MILS)
UB - THERMOPLASTIC	(RIGHT TURN ARROW, 90 MILS)
UC - THERMOPLASTIC	(STRAIGHT ARROW, 90 MILS)
UG - THERMOPLASTIC	(LEFT/STRAIGHT/RIGHT ARROW, 90 MILS)
UT - THERMOPLASTIC	(U-TURN ARROW, 90 MILS)

PAVEMENT MARKING LEGEND

- ◧ --CRYSTAL / RED PAVEMENT MARKER
- ◆ --YELLOW / YELLOW PAVEMENT MARKER
- □ --CRYSTAL / CRYSTAL PAVEMENT MARKER

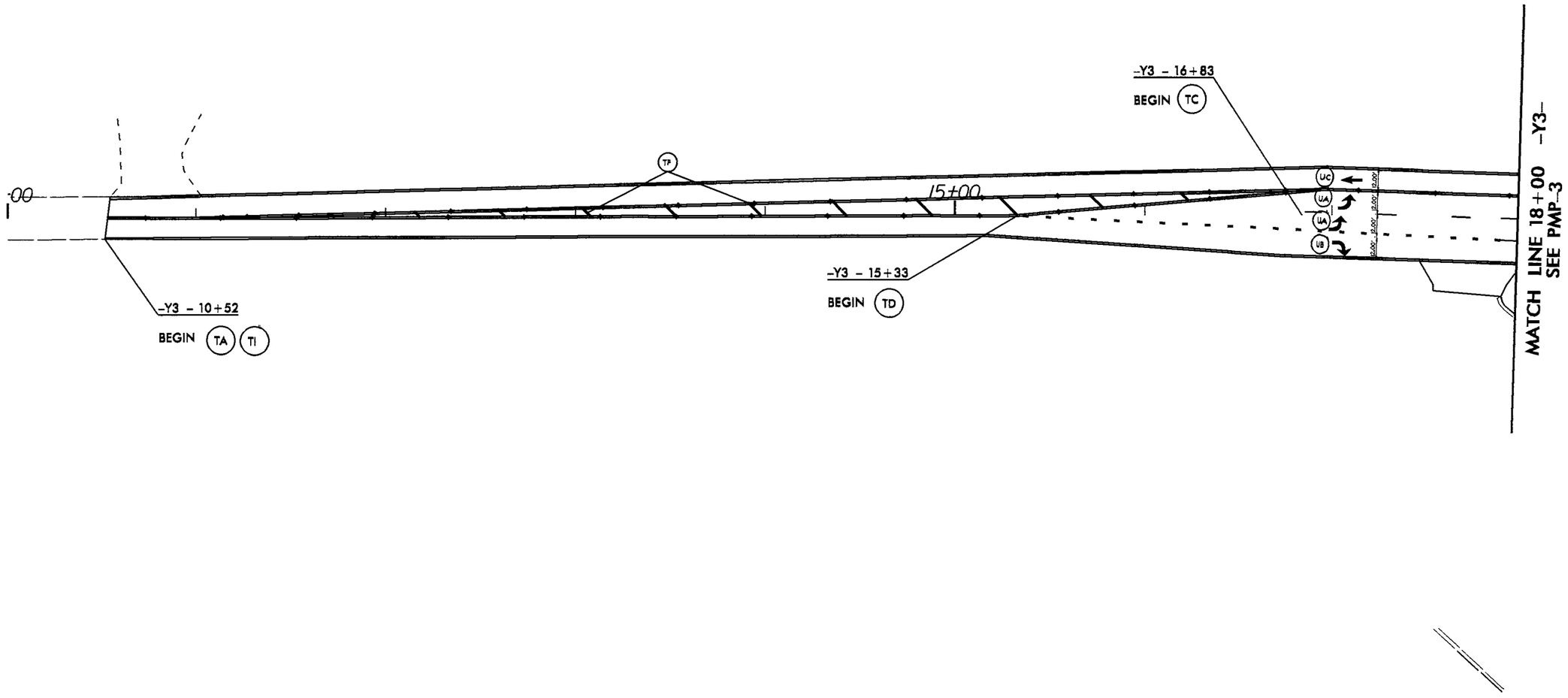

REVISIONS

8/17/99

28-MAY-2014 16:03
C:\div8_projects\rdy\HOKE\nc401esr_1305(waysice_rd)\psh\pmp\W-5208J_pmp_psh_7.dgn
gsdavis A DBCAD-270410

PROJECT REFERENCE NO.	SHEET NO.
W-5208J	Sig. 1

PHASING DIAGRAM

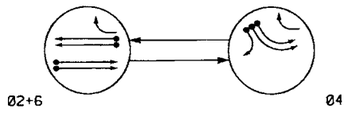

PHASING DIAGRAM DETECTION LEGEND

- DETECTED MOVEMENT
- UNDETECTED MOVEMENT (OVERLAP)
- UNSIGNALIZED MOVEMENT
- PEDESTRIAN MOVEMENT

TABLE OF OPERATION			
SIGNAL FACE	PHASE Ø2+6	PHASE Ø4	FLASH
21, 22	G	R	Y
41, 42	R	G	R
61	G	R	Y
62	G	R	Y

OASIS 2070 LOOP & DETECTOR INSTALLATION CHART												
INDUCTIVE LOOPS					DETECTOR PROGRAMMING							
LOOP	SIZE (FT)	DISTANCE FROM STOPBAR (FT)	TURNS	NEW LOOP	PHASE	CALLING	EXTENSION	FULL TIME DELAY	STRETCH TIME	DELAY TIME	SYSTEM LOOP	NEW CARD
2A/S9	6X6	420	6	Y	2	Y	Y	-	-	-	Y	-
2B/S10	6X6	420	6	Y	2	Y	Y	-	-	-	Y	-
4A	6X40	0	2-4-2	Y	4	Y	Y	-	-	-	-	-
4B	6X40	0	2-4-2	Y	4	Y	Y	-	-	-	-	-
4C	6X40	0	2-4-2	Y	4	Y	Y	-	-	15	-	-
4D	6X6	0	4	Y	4	Y	Y	-	-	15	-	-
6A/S11	6X6	420	6	Y	6	Y	Y	-	-	-	Y	-
6B/S12	6X6	420	6	Y	6	Y	Y	-	-	-	Y	-

SIGNAL FACE I.D.

All Heads L.E.D.

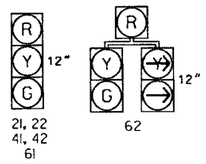

2 Phase
Fully Actuated
US 401 (Fayetteville Road) CLS

NOTES

1. Refer to "Roadway Standard Drawings NCDOT" dated January 2012 and "Standard Specifications for Roads and Structures" dated January 2012.
2. Do not program signal for late night flashing operation unless otherwise directed by the Engineer.
3. Reposition existing signal head number 42.
4. Renumber existing loops, signal heads, and phases as shown.
5. Set all detector units to presence mode.
6. Pavement markings are existing unless otherwise shown.
7. Maximum times shown in timing chart are for free-run operation only. Coordinated signal system timing values supersede these values.
8. Closed loop system data:
   Controller Asset #: 0264.

OASIS 2070L TIMING CHART			
	PHASE		
FEATURE	2	4	6
Min Green 1 *	14	7	14
Extension 1 *	6.0	2.0	6.0
Max Green 1 *	45	25	45
Yellow Clearance	5.2	3.6	5.1
Red Clearance	1.0	3.7	1.0
Red Revert	2.0	2.0	2.0
Walk 1 *	-	-	-
Don't Walk 1	-	-	-
Seconds Per Actuation *	1.5	-	1.5
Max Variable Initial *	46	-	46
Time Before Reduction *	15	-	15
Time To Reduce *	30	-	30
Minimum Gap	3.4	-	3.4
Recall Mode	MIN RECALL	-	MIN RECALL
Vehicle Call Memory	YELLOW	-	YELLOW
Dual Entry	-	-	-
Simultaneous Gap	ON	ON	ON

* These values may be field adjusted. Do not adjust Min Green and Extension times for phases 2 and 6 lower than what is shown. Min Green for all other phases should not be lower than 4 seconds.

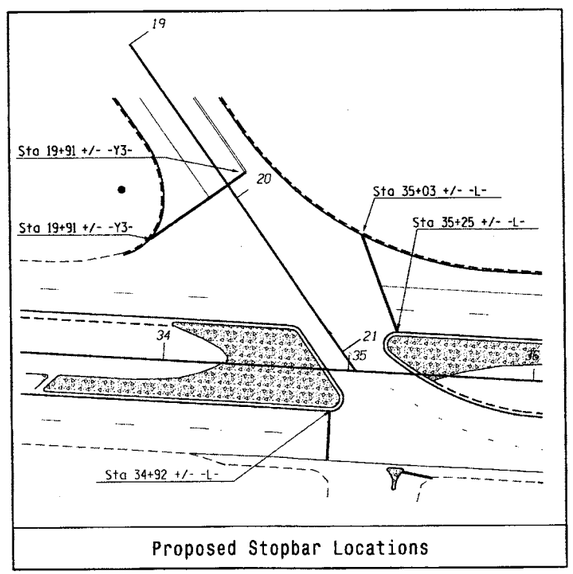

Proposed Stopbar Locations

LEGEND

PROPOSED		EXISTING
	Traffic Signal Head	
	Modified Signal Head	N/A
	Sign	
	Pedestrian Signal Head With Push Button & Sign	
	Signal Pole with Guy	
	Signal Pole with Sidewalk Guy	
	Inductive Loop Detector	
	Controller & Cabinet	
	Junction Box	
	2-in Underground Conduit	
N/A	Right of Way	
	Directional Arrow	
(A)	Left Arrow "ONLY" Sign (R3-5L)	(A)
(B)	Right Arrow "ONLY" Sign (R3-5R)	(B)
(C)	"STOP" Sign (R1-1)	(C)
(D)	No Left Turn/U-Turn Sign (R3-18)	(D)

Signal Upgrade

Prepared in the Offices of:
Transportation Mobility and Safety Division
NORTH CAROLINA DEPARTMENT OF TRANSPORTATION
Signal Design Section
750 N.Greenfield Pkwy.Garner,NC 27529

US 401 (Fayetteville Road)
at
SR 1305 (Wayside Road)

Division 8 Hoke County E. of Raeford
PLAN DATE: December 2013 REVIEWED BY:
PREPARED BY: C.E. Carter REVIEWED BY:

REVISIONS	INIT.	DATE

SCALE 0 40 1"=40'

SEAL
NORTH CAROLINA PROFESSIONAL SEAL 026486 ENGINEER ROBERT J. ZEMBA
SIGNATURE 2/14/14 DATE
SIG. INVENTORY NO. 08-0264

14-FEB-2014 14:22
S:\TESAS\TFS Signals\Signal Design Section\Central Region\Hoke Co\W-5208J\W080264_signal_20140214.dgn
rzemba

PROJECT REFERENCE NO.	SHEET NO.
W-5208J	Sig. 2

EDI MODEL 2010ECL-NC CONFLICT MONITOR PROGRAMMING DETAIL

(remove jumpers and set switches as shown)

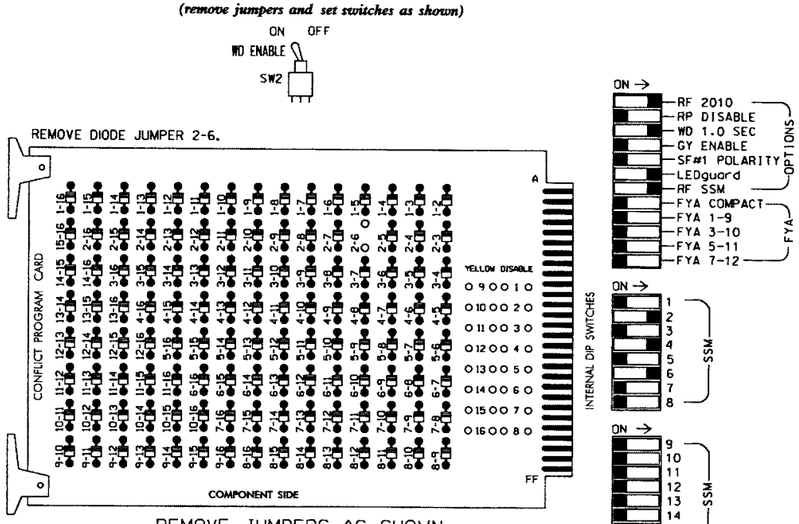

REMOVE JUMPERS AS SHOWN

NOTES:

1. Card is provided with all diode jumpers in place. Removal of any jumper allows its channels to run concurrently.
2. Make sure jumpers SEL2-SEL5 are present on the monitor board.

■ = DENOTES POSITION OF SWITCH

NOTES

1. To prevent "flash-conflict" problems, insert red flash program blocks for all unused vehicle load switches in the output file. The installer shall verify that signal heads flash in accordance with the Signal Plans.
2. Enable Simultaneous Gap-Out for all phases.
3. Program phases 2 and 6 for Variable Initial and Gap Reduction.
4. Program phases 2 and 6 for Start Up In Green.
5. Program phases 2 and 6 for Yellow Flash.
6. The cabinet and controller are part of the US 401 (Fayetteville Road) System.

EQUIPMENT INFORMATION

CONTROLLER.....2070L
CABINET.....332
SOFTWARE.....ECONOLITE OASIS
CABINET MOUNT.....BASE
OUTPUT FILE POSITIONS...12
LOAD SWITCHES USED.....S2,S4,S6
PHASES USED.....2,4,6
OVERLAPS.....NONE

SIGNAL HEAD HOOK-UP CHART

LOAD SWITCH NO.	S1	S2	S2P	S3	S4		S4P	S5	S6	S6P	S7	S8	S8P
CMU CHANNEL NO.	1	2	13	3	4		14	5	6	15	7	8	16
PHASE	1	2	2 PED	3	4		4 PED	5	6	6 PED	7	8	8 PED
SIGNAL HEAD NO.	NU	21,22	NU	NU	41,42	62	NU	NU	61,62	NU	NU	NU	NU
RED		128			101				134				
YELLOW		129			102				135				
GREEN		130			103				136				
RED ARROW													
YELLOW ARROW						102							
GREEN ARROW						103							

NU = Not Used

INPUT FILE POSITION LAYOUT

(front view)

		1	2	3	4	5	6	7	8	9	10	11	12	13	14
FILE "I"	U	SLOT	Ø2/SYS	SLOT	SLOT	SLOT	Ø 4	Ø 4	SLOT	SLOT	SLOT	SLOT	SLOT	SLOT	FS DC ISOLATOR
	L	EMPTY	2A/S9	EMPTY	EMPTY	EMPTY	4A	4C	EMPTY	EMPTY	EMPTY	EMPTY	EMPTY	EMPTY	ST
			Ø2/SYS				Ø 4	Ø 4							
			2B/S10				4B	4D							DC ISOLATOR
FILE "J"	U	SLOT	Ø6/SYS	SLOT	SLOT	SLOT	SLOT	SLOT	SLOT	SLOT	SLOT	SLOT	SLOT	SLOT	SLOT
	L	EMPTY	6A/S11	EMPTY	EMPTY	EMPTY	EMPTY	EMPTY	EMPTY	EMPTY	EMPTY	EMPTY	EMPTY	EMPTY	EMPTY
			Ø6/SYS												
			6B/S12												

EX.: 1A, 2A, ETC. = LOOP NO.'S

FS = FLASH SENSE
ST = STOP TIME
PRE = PREEMPT

INPUT FILE CONNECTION & PROGRAMMING CHART

LOOP NO.	LOOP TERMINAL	INPUT FILE POS.	PIN NO.	INPUT ASSIGNMENT NO.	DETECTOR NO.	NEMA PHASE	CALL	EXTEND	FULL TIME DELAY	STRETCH TIME	DELAY TIME
2A/S9	TB2-5,6	I2U	39	1	2	2	Y	Y			
2B/S10	TB2-7,8	I2L	43	5	12	2	Y	Y			
4A	TB4-9,10	I6U	41	3	4	4	Y	Y			
4B	TB4-11,12	I6L	45	7	14	4	Y	Y			
4C	TB6-1,2	I7U	65	27	34	4	Y	Y			15
4D	TB6-3,4	I7L	78	40	44	4	Y	Y			15
6A/S11	TB3-5,6	J2U	40	2	6	6	Y	Y			
6B/S12	TB3-7,8	J2L	44	6	16	6	Y	Y			

INPUT FILE POSITION LEGEND: J2L
FILE J
SLOT 2
LOWER

THIS ELECTRICAL DETAIL IS FOR
THE SIGNAL DESIGN: 08-0264
DESIGNED: December 2013
SEALED: 2-14-14
REVISED: N/A

Electrical Detail

ELECTRICAL AND PROGRAMMING DETAILS FOR:

Prepared in the Offices of,
North Carolina Department of Transportation, Mobility and Safety, Traffic Engineering Branch, Signal Management Section
750 N.Greenfield Pkwy, Garner, NC 27529

US 401 (Fayetteville Road)
at
SR 1305 (Wayside Road)

Division 8 Hoke County E. of Raeford

PLAN DATE: February 2014 REVIEWED BY: JTR
PREPARED BY: James Peterson REVIEWED BY:

REVISIONS	INIT.	DATE

SEAL
NORTH CAROLINA PROFESSIONAL SEAL 008453 ENGINEER JOHN T. ROWE, JR.
SIGNATURE 2-17-14 DATE
SIG. INVENTORY NO. 08-0264

17-FEB-2014 10:38
S:\TSAS\MTS Signals\workgroups\Sig Mgmt\Peterson\08264_sm.dgn
jtpeterson

PROJECT REFERENCE NO.	SHEET NO.
W-5208J	Sig. 3

PHASING DIAGRAM

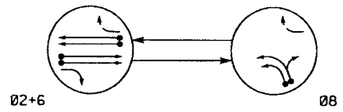

PHASING DIAGRAM DETECTION LEGEND

- DETECTED MOVEMENT
- UNDETECTED MOVEMENT (OVERLAP)
- UNSIGNALIZED MOVEMENT
- PEDESTRIAN MOVEMENT

TABLE OF OPERATION			
SIGNAL FACE	PHASE 02+6	PHASE 08	FLASH
22, 23	G	R	Y
62, 63	G	R	Y
81, 82	R	G	R

SIGNAL FACE I.D.

All Heads L.E.D.

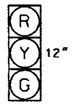

22, 23
62, 63
81, 82

OASIS 2070 LOOP & DETECTOR INSTALLATION CHART												
INDUCTIVE LOOPS					DETECTOR PROGRAMMING							
LOOP	SIZE (FT)	DISTANCE FROM STOPBAR (FT)	TURNS	NEW LOOP	PHASE	CALLING	EXTENSION	PULL TIME DELAY	STRETCH TIME	DELAY TIME	SYSTEM LOOP	NEW CARD
2A/S5	6X6	420	EXISTING	-	2	Y	Y	-	-	-	Y	-
2B/S6	6X6	420	EXISTING	-	2	Y	Y	-	-	-	Y	-
6A/S7	6X6	420	6	Y	6	Y	Y	-	-	-	Y	-
6B/S8	6X6	420	6	Y	6	Y	Y	-	-	-	Y	-
8A	6X40	0	2-4-2	-	8	Y	Y	-	-	-	-	Y
8B	6X40	0	2-4-2	Y	8	Y	Y	-	-	10	-	Y
8C	6X6	0	6	Y	8	Y	Y	-	-	15	-	Y

2 Phase
Fully Actuated
US 401 (Fayetteville Road) CLS

NOTES

1. Refer to "Roadway Standard Drawings NCDOT" dated January 2012 and "Standard Specifications for Roads and Structures" dated January 2012.
2. Do not program signal for late night flashing operation unless otherwise directed by the Engineer.
3. Set all detector units to presence mode.
4. Pavement markings are existing unless otherwise shown.
5. Maximum times shown in timing chart are for free-run operation only. Coordinated signal system timing values supersede these values.
6. Closed loop system data:
   Controller Asset #: 0444.

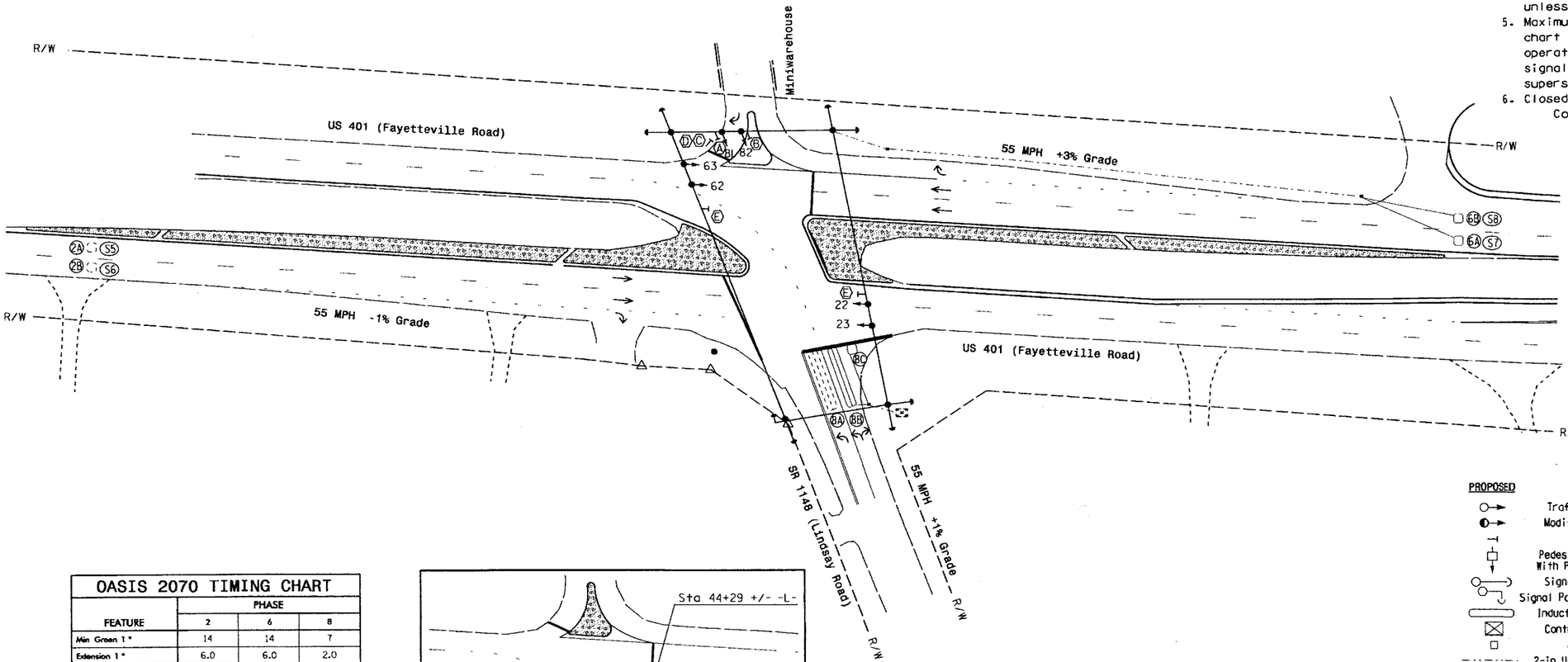

LEGEND

PROPOSED		EXISTING
	Traffic Signal Head	
	Modified Signal Head	N/A
	Sign	
	Pedestrian Signal Head With Push Button & Sign	
	Signal Pole with Guy	
	Signal Pole with Sidewalk Guy	
	Inductive Loop Detector	
	Controller & Cabinet	
	Junction Box	
	2-in Underground Conduit	
N/A	Right of Way	
	Directional Arrow	
(A)	Left Arrow "ONLY" Sign (R3-5L)	(A)
(B)	Dual Turn Arrows Sign	(B)
(C)	"STOP" Sign (R1-1)	(C)
(D)	Right Arrow "ONLY" Sign (R3-5R)	(D)
(E)	No U-Turn/Left Turn Sign	(E)

OASIS 2070 TIMING CHART			
FEATURE	PHASE 2	PHASE 6	PHASE 8
Min Green 1 *	14	14	7
Extension 1 *	6.0	6.0	2.0
Max Green 1 *	90	90	15
Yellow Clearance	5.3	4.9	3.0
Red Clearance	1.0	1.0	3.9
Red Revert	2.0	2.0	2.0
Walk 1 *	-	-	-
Don't Walk 1	-	-	-
Seconds Per Actuation *	1.5	1.5	-
Max Variable Initial *	46	46	-
Time Before Reduction *	15	15	-
Time To Reduce *	30	30	-
Minimum Gap	3.4	3.4	-
Recall Mode	MIN RECALL	MIN RECALL	-
Vehicle Call Memory	YELLOW	YELLOW	-
Dual Entry	-	-	-
Simultaneous Gap	ON	ON	ON

* These values may be field adjusted. Do not adjust Min Green and Extension times for phases 2 and 6 lower than what is shown. Min Green for all other phases should not be lower than 4 seconds.

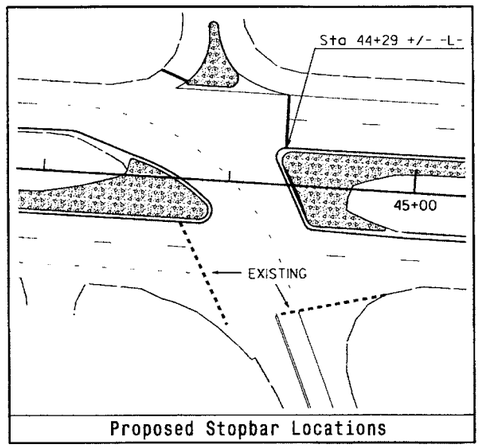

Proposed Stopbar Locations

Signal Upgrade

Prepared in the Offices of:
Transportation Mobility and Safety Division
NORTH CAROLINA DEPARTMENT OF TRANSPORTATION
Signal Design Section
750 N.Greenfield Pkwy,Garner,NC 27529

US 401 (Fayetteville Road)
at
SR 1418 (Lindsay Road)

Division 8 Hoke County East of Raeford

PLAN DATE: December 2013 REVIEWED BY:
PREPARED BY: C.E. Carter REVIEWED BY:

REVISIONS	INIT.	DATE

SCALE 0 40 1"=40'

SEAL
NORTH CAROLINA PROFESSIONAL SEAL 026486 ENGINEER ROBERT J. ZIEMBA
SIGNATURE DATE
SIG. INVENTORY NO. 08-0444

14-FEB-2014 14:29
S:\eTRAS\ITS Signals\Signal Design Section\Central Region\Div 8\W-5208J\W5208J0444_sig_dsn_20140214.dgn
ZIEMBRO

PROJECT REFERENCE NO.	SHEET NO.
W-5208J	Sig. 4

EDI MODEL 2010ECL-NC CONFLICT MONITOR PROGRAMMING DETAIL

(remove jumpers and set switches as shown)

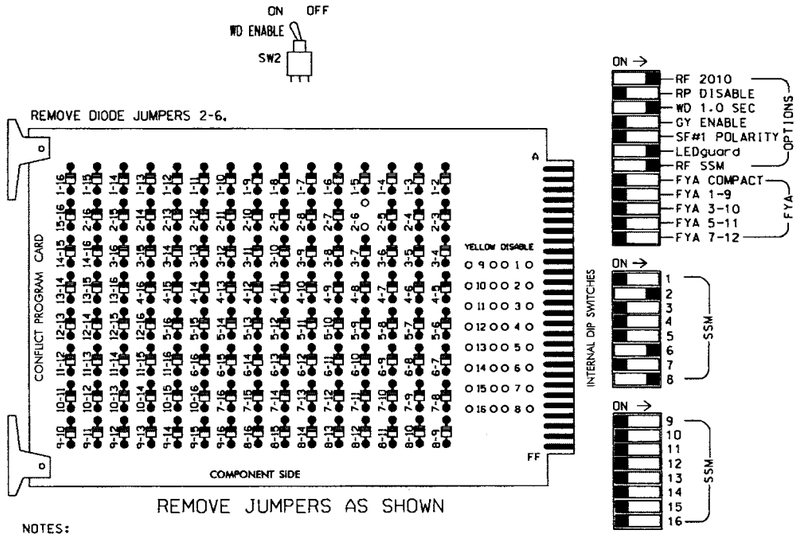

REMOVE JUMPERS AS SHOWN

NOTES:

1. Card is provided with all diode jumpers in place. Removal of any jumper allows its channels to run concurrently.
2. Make sure jumpers SEL2-SEL5 are present on the monitor board.

■ = DENOTES POSITION OF SWITCH

NOTES

1. To prevent "flash-conflict" problems, insert red flash program blocks for all unused vehicle load switches in the output file. The installer shall verify that signal heads flash in accordance with the Signal Plans.
2. Enable Simultaneous Gap-Out for all phases.
3. Program phases 2 and 6 for Variable Initial and Gap Reduction.
4. Program phases 2 and 6 for Start Up In Green.
5. Program phases 2 and 6 for Yellow Flash.
6. The cabinet and controller are part of the US 401 (Fayetteville Road) Closed Loop System.

EQUIPMENT INFORMATION

CONTROLLER.....2070L
CABINET.....332 /W/ AUX
SOFTWARE.....ECONOLITE OASIS
CABINET MOUNT.....BASE
OUTPUT FILE POSITIONS...18 WITH AUX. OUTPUT FILE
LOAD SWITCHES USED.....S2,S6,S8
PHASES USED.....2,6,8
OVERLAPS.....NONE

SIGNAL HEAD HOOK-UP CHART

LOAD SWITCH NO.	S1	S2	S2P	S3	S4	S4P	S5	S6	S6P	S7	S8	S8P	S9	S10	S11	S12	S13	S14
CMU CHANNEL NO.	1	2	13	3	4	14	5	6	15	7	8	16	9	10	17	11	12	18
PHASE	1	2	2 PED	3	4	4 PED	5	6	6 PED	7	8	8 PED	OLA	OLB	SPARE	OLC	OLD	SPARE
SIGNAL HEAD NO.	NU	22,23	NU	NU	NU	NU	NU	62,63	NU	NU	81,82	NU	NU	NU	NU	NU	NU	NU
RED		128						134			107							
YELLOW		129						135			108							
GREEN		130						136			109							
RED ARROW																		
YELLOW ARROW																		
GREEN ARROW																		

NU = Not Used

INPUT FILE POSITION LAYOUT

(front view)

		1	2	3	4	5	6	7	8	9	10	11	12	13	14
FILE "I"	U	SLOT EMPTY	ø2/SYS 2A/S5	SLOT EMPTY	SLOT EMPTY	SLOT EMPTY	SLOT EMPTY	SLOT EMPTY	SLOT EMPTY	SLOT EMPTY	SLOT EMPTY	SLOT EMPTY	SLOT EMPTY	SLOT EMPTY	FS DC ISOLATOR
	L		ø2/SYS 2B/S6												ST DC ISOLATOR
FILE "J"	U	SLOT EMPTY	ø6/SYS 6A/S7	SLOT EMPTY	SLOT EMPTY	SLOT EMPTY	ø8 8A	ø8 8C	SLOT EMPTY	SLOT EMPTY	SLOT EMPTY	SLOT EMPTY	SLOT EMPTY	SLOT EMPTY	SLOT EMPTY
	L		ø6/SYS 6B/S8				ø8 8B	NOT USED							

EX.: 1A, 2A, ETC. = LOOP NO.'S

FS = FLASH SENSE
ST = STOP TIME

INPUT FILE CONNECTION & PROGRAMMING CHART

LOOP NO.	LOOP TERMINAL	INPUT FILE POS.	PIN NO.	INPUT ASSIGNMENT NO.	DETECTOR NO.	NEMA PHASE	CALL	EXTEND	FULL TIME DELAY	STRETCH TIME	DELAY TIME
2A/S5	TB2-5,6	I2U	39	1	2	2	Y	Y			
2B/S6	TB2-7,8	I2L	43	5	12	2	Y	Y			
6A/S7	TB3-5,6	J2U	40	2	6	6	Y	Y			
6B/S8	TB3-7,8	J2L	44	6	16	6	Y	Y			
8A	TB5-9,10	J6U	42	4	8	8	Y	Y			
8B	TB5-11,12	J6L	46	8	18	8	Y	Y			10
8C	TB7-1,2	J7U	66	28	38	8	Y	Y			15

INPUT FILE POSITION LEGEND: J2L
FILE J
SLOT 2
LOWER

THIS ELECTRICAL DETAIL IS FOR
THE SIGNAL DESIGN: 08-0444
DESIGNED: December 2013
SEALED: 2-14-14
REVISED: N/A

Electrical Detail

ELECTRICAL AND PROGRAMMING DETAILS FOR:	US 401 (Fayetteville Road) at SR 1418 (Lindsay Road)	SEAL
Prepared In the Offices of: NORTH CAROLINA DEPARTMENT OF TRANSPORTATION Traffic Engineering Branch Signal Management Section 750 N.Greenfield Pkwy.,Garner,NC 27529	Division 8 Hoke County East of Raeford PLAN DATE: February 2014 REVIEWED BY: JTR PREPARED BY: James Peterson REVIEWED BY: REVISIONS INIT. DATE	NORTH CAROLINA PROFESSIONAL SEAL 008453 ENGINEER JOHN T. ROWE, JR. SIGNATURE DATE 2-17-14 SIG. INVENTORY NO. 08-0444

17-FEB-2014 10:27
S:\ATTSSOum\ITS Signals\Workgroups\Sig Work\Peterson\080444_sheet1_xxx.dgn
jpeterson

See Sheet 1-A For Index of Sheets

STATE OF NORTH CAROLINA
DIVISION OF HIGHWAYS

STATE	STATE PROJECT REFERENCE NO.	SHEET NO.
N.C.	W-5208J	ECP-1

STATE PROJ. NO.	F. A. PROJ. NO.	DESCRIPTION
45338.1.10	HSIP-0401(254)	PE
45338.2.10	HSIP-0401(254)	R/W
45338.3.10	HSIP-0401(254)	CONST.

PROJECT LOCATION

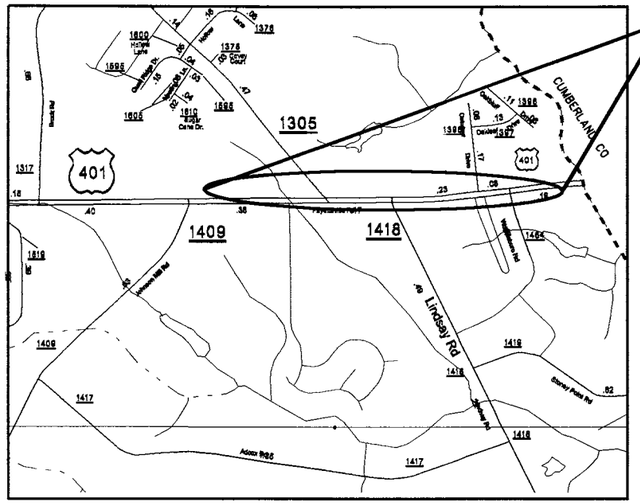

PLAN FOR PROPOSED
HIGHWAY EROSION CONTROL
HOKE COUNTY

LOCATION: US 401 AT SR 1305 (WAYSIDE RD.) AND SR 1409 (LINDSAY RD)

TYPE OF WORK: GRADING, PAVING, CONCRETE ISLANDS, AND THEMOPLASTIC MARKINGS & MARKERS

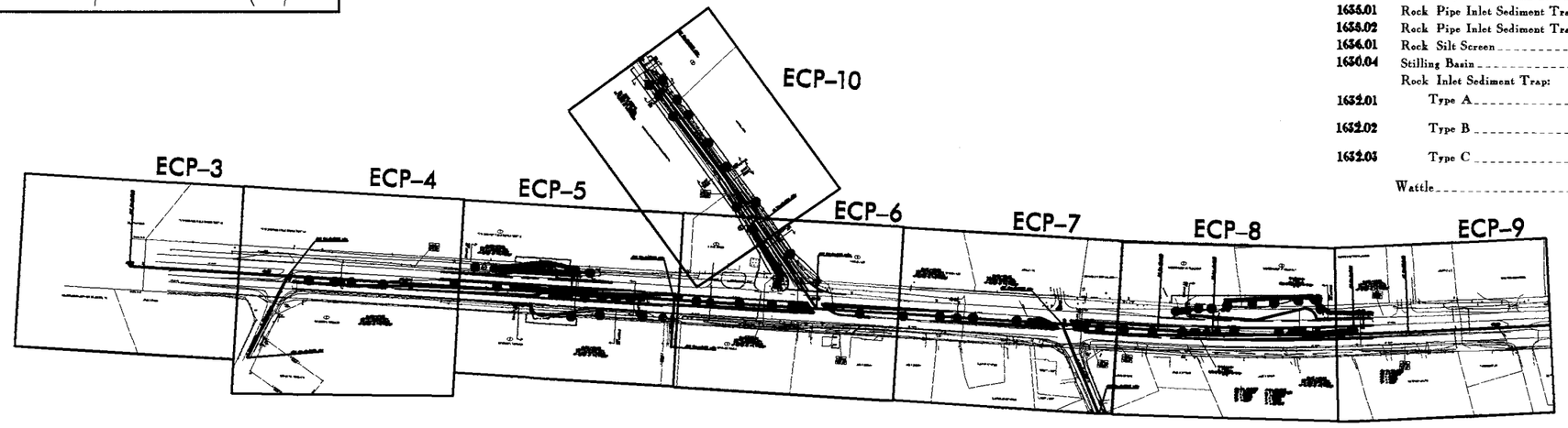

EROSION AND SEDIMENT CONTROL MEASURES

Std. #	Description	Symbol
	Streambank Reforestation	
1630.03	Temporary Silt Ditch	TSD
1630.05	Temporary Diversion	TD
1605.01	Temporary Silt Fence	
1606.01	Special Sediment Control Fence	
1622.01	Temporary Berms and Slope Drains	
1630.01	Riser Basin	
1630.02	Silt Basin Type B	
1633.01	Temporary Rock Silt Check Type-A	
1633.02	Temporary Rock Silt Check Type-B	
1634.01	Temporary Rock Sediment Dam Type-A	
1634.02	Temporary Rock Sediment Dam Type-B	
1635.01	Rock Pipe Inlet Sediment Trap Type-A	
1635.02	Rock Pipe Inlet Sediment Trap Type-B	
1636.01	Rock Silt Screen	
1630.04	Stilling Basin	
	Rock Inlet Sediment Trap:	
1632.01	Type A	A - OR - A
1632.02	Type B	B - OR - B
1632.03	Type C	C - OR - C
	Wattle	

CONTRACT: **TIP PROJECT: W-5208J**

Prepared By:
Greg S. Davis, PE
Level III A #3088
December 31, 2014

PROJECT CONTACTS:
District Engineer Marty Tillman, PE
Design & Construct Engineer Greg S. Davis, PE
Resident Engineer Charles E. Dumas Jr, PE

PROJECT LENGTH
0.93 mi.

Prepared in the Office of:
DIVISION EIGHT
DIVISION DESIGN & CONSTRUCT UNIT
902 N Sandhills Blvd.
PO Box 1067
Aberdeen, 28315

2012 STANDARD SPECIFICATIONS

Roadway Standard Drawings

The following roadway english standards as appear in "Roadway Standard Drawings" - Roadway Design Unit - N. C. Department of Transportation - Raleigh, N. C., dated January 17, 2012 and the latest revision thereto are applicable to this project and by reference hereby are considered a part of these plans.

1605.01	Temporary Silt Fence	1632.01	Rock Inlet Sediment Trap Type A
1606.01	Special Sediment Control Fence	1632.03	Rock Inlet Sediment Trap Type C
1622.01	Temporary Berms and Slope Drains	1633.01	Temporary Rock Silt Check Type A
1630.01	Riser Basin	1633.02	Temporary Rock Silt Check Type B
1630.02	Silt Basin Type B	1634.01	Temporary Rock Sediment Dam Type A
1630.03	Temporary Silt Ditch	1634.02	Temporary Rock Sediment Dam Type B
1630.04	Stilling Basin	1635.01	Rock Pipe Inlet Sediment Trap Type A
1630.05	Temporary Diversion	1636.01	Rock Silt Screen

29-MAY-2014 11:48
C:\div8_projects\rdy\HOKE\nc401@sr_1305\wayside_rd\psh\ecp\us401@SR-1305(wayside_rd)_ecp_tsh.dgn
gsdavis AT D8CAD-270410

COIR FIBER BAFFLE DETAIL

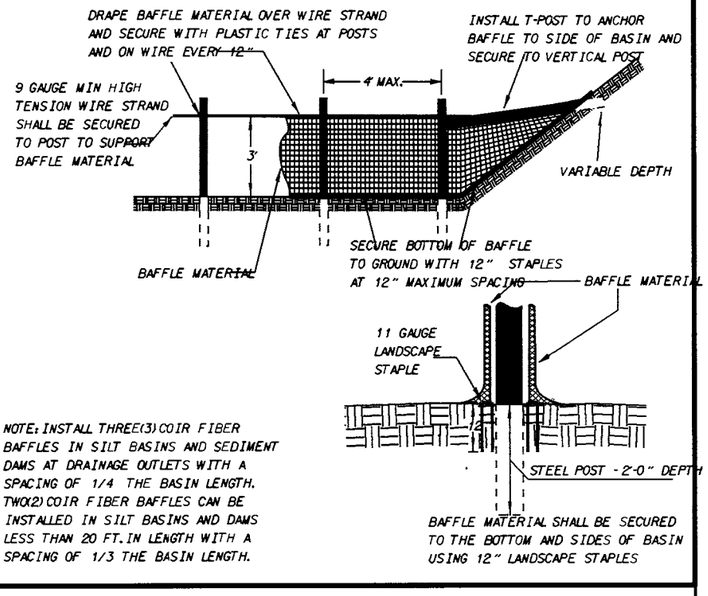

NOTE: INSTALL THREE(3) COIR FIBER BAFFLES IN SILT BASINS AND SEDIMENT DAMS AT DRAINAGE OUTLETS WITH A SPACING OF 1/4 THE BASIN LENGTH. TWO(2) COIR FIBER BAFFLES CAN BE INSTALLED IN SILT BASINS AND DAMS LESS THAN 20 FT. IN LENGTH WITH A SPACING OF 1/3 THE BASIN LENGTH.

EROSION CONTROL DETAILS AND SPECIFICATIONS

STD. #	DESCRIPTION	SYMBOL
1630.03	TEMPORARY SILT DITCH	TSD
1630.05	TEMPORARY DIVERSION	TD
1605.01	TEMPORARY SILT FENCE	
1622.01	GUIDE FOR TEMPORARY BERMS & SLOPE DRAINS	
1630.01	Riser Basin	
1630.02	SILT BASIN TYPE-B	
1633.01	TEMPORARY ROCK SILT CHECK TYPE-A	
	Wattle	
1633.02	TEMPORARY ROCK SILT CHECK TYPE-B	
1634.01	TEMPORARY ROCK SEDIMENT DAM TYPE-A	
1634.02	TEMPORARY ROCK SEDIMENT DAM TYPE-B	
1635.01	ROCK PIPE INLET SEDIMENT TRAP TYPE A	
1636.01	ROCK SILT SCREEN	
1630.04	STILLING BASIN FOR PUMPED EFFLUENT	
	ROCK INLET SEDIMENT PROTECTION	
1632.01	TRAP TYPE-A	A OR A
1632.02	TRAP TYPE-B	B OR B
1632.03	TRAP TYPE-C	C OR C

NARRATIVE

1. SOIL TYPE: CLAY SAND X

2. IS THE PROJECT LOCATED IN A HIGH QUALITY WATER ZONE?
YES X NO

3. ARE THERE ANY WETLANDS ADJOINING THIS PROJECT?
YES X NO

SITE DESCRIPTION

This project is located on US 401 on the Eastern side of Raeford.
The area surrounding this project primarily consists of wooded areas, commercial development, and agricultural fields.
The drainage consists of roadway ditches that lead to existing ditches.

PROJECT DESCRIPTION

The project will consist of clearing, grubbing, draining, setting up the base and paving. The major land disturbing activites will consist of clearing and grading within the right of way. Temporary and permanent erosion control measures will be installed.

MAINTENANCE SCHEDULE

1. INSPECT WEEKLY AND AFTER EACH RAINFALL USE THE DEPARTMENT OF TRANSPORTATION'S EROSION CONTROL INSPECTION REPORT.

2. MAINTAIN EROSION CONTROL DEVICES AS FOLLOWS:

A. SILT DITCH - REMOVE SEDIMENT FROM THE FLOW AREA AND REPAIR THE DIVERSION RIDGE - CAREFULLY CHECK OUTLETS AND MAKE TIMELY REPAIRS AS NEEDED.

B. SILT FENCE - REMOVE SEDIMENT DEPOSITS AS NECESSARY TO PROVIDE ADEQUATE STORAGE VOLUME FOR THE NEXT RAIN AND TO REDUCE PRESSURE ON THE FENCE - AVOID UNDERMINING THE FENCE.

C. SLOPE DRAINS - INSPECT THE SLOPE DRAINS AND SUPPORTING DIVERSIONS.

D. SEDIMENT BASIN - REMOVE SEDIMENT AND RESTORE THE BASIN TO ITS ORIGINAL DIMENSIONS WHEN SEDIMENT ACCUMULATES TO ONE-HALF THE DESIGN DEPTH - CHECK THE EMBANKMENT, SPILLWAYS, AND OUTLET FOR EROSION DAMAGE, AND INSPECT THE EMBANKMENT FOR PIPING AND SETTLEMENT - REMOVE ALL TRASH AND OTHER DEBRIS FROM THE RISER AND POOL AREA.

E. CHECK DAM - REMOVE SETTLEMENT ACCUMULATED BEHIND THE DAMS AS NEEDED TO PREVENT DAMAGE TO CHANNEL VEGETATION - ADD STONE TO DAMS AS NEEDED TO MAINTAIN DESIGN HEIGHT AND CROSS SECTION.

F. ROCK DAM - REMOVE SEDIMENT AND RESTORE ORIGINAL VOLUME WHEN SEDIMENT ACCUMULATES TO ONE-HALF THE DESIGN VOLUME - CHECK THE STRUCTURE FOR EROSION, PIPING, AND ROCK DISPLACEMENT AFTER EACH SIGNIFICANT RAINSTORM AND REPAIR IMMEDIATELY.

G. DROP INLET PROTECTION (TYPE C) - REMOVE SEDIMENT FROM THE POOL AREAS AS NECESSARY TO PROVIDE ADEQUATE STORAGE VOLUME FOR THE NEXT RAIN.

H. SEDIMENT TRAP - REMOVE SEDIMENT AND RESTORE THE TRAP TO ITS ORIGINAL DIMENSIONS WHEN SETTLEMENT HAS ACCUMULATED TO ONE-HALF THE DESIGN DEPTH OF THE TRAP - CHECK THE STRUCTURE FOR DAMAGE FROM EROSION OR PIPING TO ENSURE IT IS A MINIMUM OF 1.5 FT. BELOW THE LOW POINT OF THE EMBANKMENT.

NOTE: SEDIMENT SHOULD BE PLACED IN DESIGNATED DISPOSAL AREAS AND NOT ALLOWED TO FLOW INTO STREAMS OR DRAINAGE WAYS DURING STRUCTURE REMOVAL.
NOTE: ALL SEDIMENT TRAPS/BASINS SHALL HAVE COIR FIBER BAFFLES. BASINS/TRAPS OVER 10 FT IN LENGTH SHALL HAVE TWO ROWS.
NOTE: NO PAM TO USED WITH THE LAST BMT (WATTLE) AT OUTLET OF THE PROJECT

NOTE: The erosion control measures have be designed to provide a minimum of 43% of the storage calculated using the RUSLE2 analysis. These sections of disturbed area must then be permanently stabilized within 60 days from the time grading begins. The devices designed using these calculations have been noted.

GENERAL CONSIDERATIONS

1. THE LAW REQUIRES INSTALLATION AND MAINTENANCE OF SUFFICIENT EROSION CONTROL PRACTICES TO RETAIN SEDIMENT WITHIN THE BOUNDARIES OF THE SITE. IT ALSO REQUIRES THAT SURFACES BE NON EROSIVE AND STABLE WITHIN 14 DAYS CALENDAR DAYS AFTER THE COMPLETION OF ANY PHASE OF GRADING.

2. FIT THE DEVELOPMENT TO THE SITE - FOLLOW THE NATURAL CONTOURS AS MUCH AS POSSIBLE. PRESERVE AND USE NATURAL DRAINAGE SYSTEMS.

3. LIMIT CLEARING AND GRUBBING - CLEARLY DEFINE WORK LIMIT LINES. GRADE TO MINIMIZE CUT-AND-FILL SLOPES, PRESERVE NATURAL BUFFER AREAS, AND LIMIT THE TIME THAT BARE SOIL IS EXPOSED.

4. PROTECT THE SOIL SURFACE - LIMIT THE EXTENT OF DISTURBANCE AND STABILIZE THE SOIL SURFACE IMMEDIATELY. ONCE THE SURFACE HAS BEEN DISTURBED, IT IS SUBJECT TO ACCELERATED EROSION AND SHOULD BE PROTECTED WITH APPROPRIATE COVER, SUCH AS MULCH OR VEGETATION IN AN EXPEDIENT MANNER.

5. SEDIMENT BASINS AND TRAPS - SELECT SITES AND INSTALL SEDIMENT BASINS AND TRAPS BEFORE OTHER CONSTRUCTION ACTIVITIES ARE STARTED. ALSO CONSIDER LOCATIONS FOR DIVERSIONS, OPEN CHANNELS, AND STORM DRAINS AT THIS TIME SO THAT ALL SEDIMENT-LADEN TO RUN OFF CAN BE DIRECTED TO AN IMPOUNDMENT STRUCTURE BEFORE LEAVING THE CONSTRUCTION SITE. INSTALL ALL MEASURES AND RELEASE POINTS PRIOR TO CLEARING AND GRUBBING.

6. ONCE AN AREA IS DISTURBED, IT IS SUBJECT TO ACCELERATED EROSION. EROSION CONSTROL CAN BE ACHIEVED BY:

- LIMITING THE SIZE OF THE CLEARING AND TIME OF EXPOSURE BY PROPER SCHEDULING.
- REDUCING THE AMOUNT OF RUNOFF OVER THE DISTURBED SURFACE.
- LIMITING GRADES AND LENGTHS OF SLOPES, AND
- RE-ESTABLISHING PROTECTIVE COVER IMMEDIATELY AFTER LAND DUSTURBING ACTIVITIES ARE COMPLETED OR WHEN CONSTRUCTION ACTIVITES ARE DELAYED FOR THIRTY (30) OR MORE WORKING DAYS

7. STABILIZE CONSTRUCTION ACCESS AREAS, CONSTRUCTION ROADS, AND PARKING AREA DURING INITIAL ACTIVITIES. TRY TO KEEP ROAD GRADES TO A MINIMUM GENERALLY NEVER EXCEEDING 12%.

8. CLEAR BORROW AND WASTE DISPOSAL AREAS AS NEEDED AND PROTECT THEM FROM SURFACE RUNOFF. SLOPE ALL AREAS TO PROVIDE POSITIVE DRAINAGE, AND STABILIZE BARE SOIL SURFACES WITH PERMANENT VEGETATION OR MULCH AS SOON AS FINAL GRADES ARE PREPARED. DIRECT ALL RUNOFF THAT CONTAINS SEDIMENT TO A SEDIMENT-TRAPPING DEVICE. IN LARGE BORROW AND DISPOSAL SITES, SHAPE AND DEEPEN THE LOWER END TO FORM AN IN-PLACE SEDIMENT TRAP.

9. ONLY SEDIMENT-FREE RUNOFF MAY BE DISCHARGED FROM CONSTRUCTION SITES DIRECTLY INTO STREAMS. ENSURE THAT ALL OTHER FLOWS ENTER FROM DESILTING POOLS FORMED BY SEDIMENT TRAPS OR BARRIERS.

10. AREAS ADJOINING STREAMS SHOULD BE LEFT UNDISTURBED AS BUFFERS. WHERE NATURAL BUFFERS ARE NOT AVAILABLE, PROVIDE ARTIFICIAL BUFFERS. WHERE WORK IS REQUIRED ALONG A STREAM, PROVIDE MECHANICAL OR ARTIFICIAL BUFFER (25 FEET MINIMUM REQUIRED).

11. BEFORE MOVING TO NEXT JOB SITE, REVIEW ALL MEASURES FOR EFFECTIVENESS; MAKE ANY ADJUSTMENTS, CLEAR-OUTS, OR REPAIR; CALL ROADSIDE ENVIRONMENTAL DEPARTMENT FOR INSTALLATION OF A DITCH LINER AND SEEDING AND MULCHING OF ALL DISTURBED AREAS.

12. CONTINUE TO CHECK AND MAINTAIN ALL MEASURES AFTER EACH SIGNIFICANT RAINFALL UNTIL ALL DISTURBED AREAS BECOME STABILIZED.

13. FILL IN ALL SILT BASINS AND SILT DITCHES, REMOVE ALL SILT FENCES AND SLOPE DRAINS. REDISTRIBUTE ALL STONE FROM SILT CHECKS, SEDIMENT DAMS, AND SILT SCREENS. SEED AND MULCH DISTURBED AREAS.

TIP PROJECT	SHEET NO
W-5206J	ECP-2A

WATTLE WITH POLYACRYLAMIDE (PAM) DETAIL

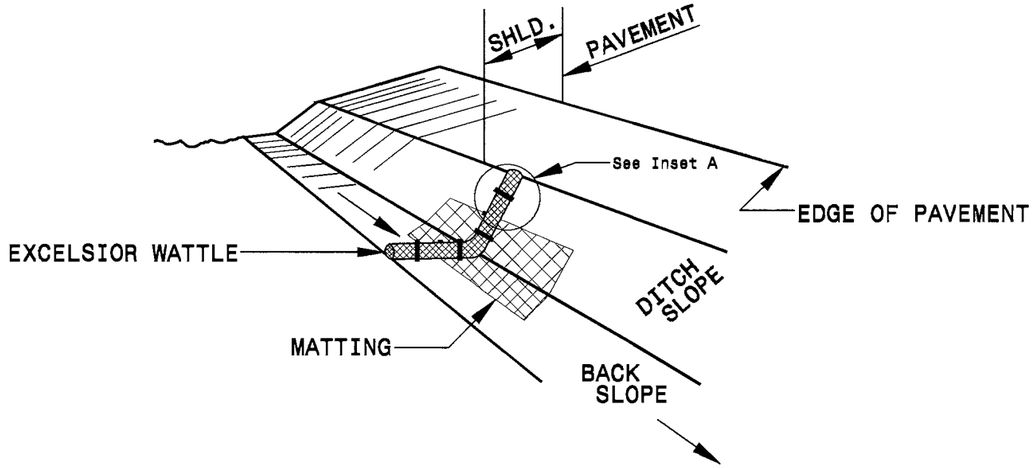

ISOMETRIC VIEW

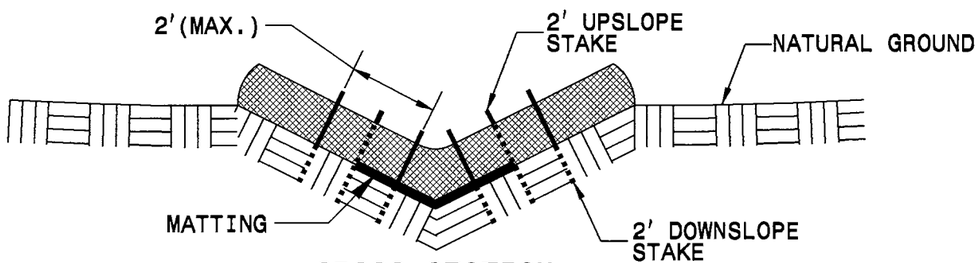

CROSS SECTION VEE DITCH

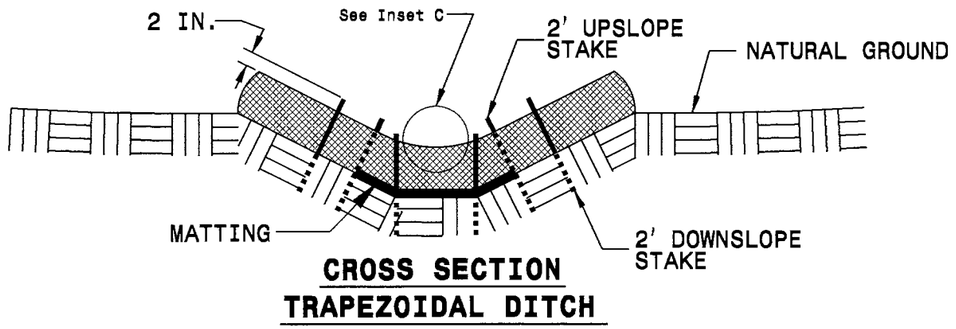

CROSS SECTION TRAPEZOIDAL DITCH

NOTES:

USE MINIMUM 12 IN. DIAMETER EXCELSIOR WATTLE.

USE 2 FT. WOODEN STAKES WITH A 2 IN. BY 2 IN. NOMINAL CROSS SECTION.

ONLY INSTALL WATTLE(S) TO A HEIGHT IN DITCH SO FLOW WILL NOT WASH AROUND WATTLE AND SCOUR DITCH SLOPES AND AS DIRECTED.

INSTALL A MINIMUM OF 2 UPSLOPE STAKES AND 4 DOWNSLOPE STAKES AT AN ANGLE TO WEDGE WATTLE TO BOTTOM OF DITCH.

PROVIDE STAPLES MADE OF 0.125 IN. DIAMETER STEEL WIRE FORMED INTO A U SHAPE NOT LESS THAN 12" IN LENGTH.

INSTALL STAPLES APPROXIMATELY EVERY 1 LINEAR FOOT ON BOTH SIDES OF WATTLE AND AT EACH END TO SECURE IT TO THE SOIL.

INSTALL MATTING IN ACCORDANCE WITH SECTION 1631 OF THE STANDARD SPECIFICATIONS.

PRIOR TO POLYACRYLAMIDE (PAM) APPLICATION, OBTAIN A SOIL SAMPLE FROM PROJECT LOCATION, AND FROM OFFSITE MATERIAL, AND ANALYZE FOR APPROPRIATE PAM FLOCCULANT TO BE APPLIED TO EACH WATTLE.

INITIALLY APPLY 2 OUNCES OF ANIONIC OR NEUTRALLY CHARGED PAM OVER WATTLE WHERE WATER WILL FLOW AND 1 OUNCE OF PAM ON MATTING ON EACH SIDE OF WATTLE. REAPPLY PAM AFTER EVERY RAINFALL EVENT THAT IS EQUAL TO OR EXCEEDS 0.50 IN.

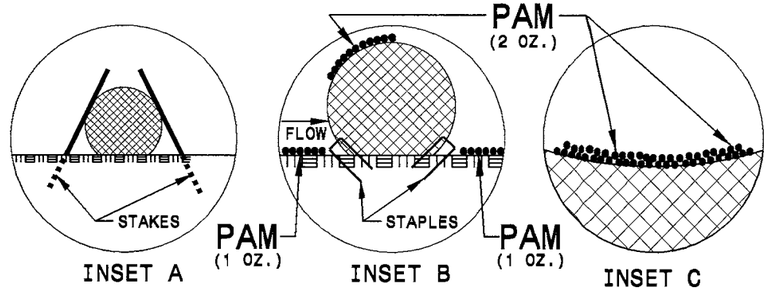

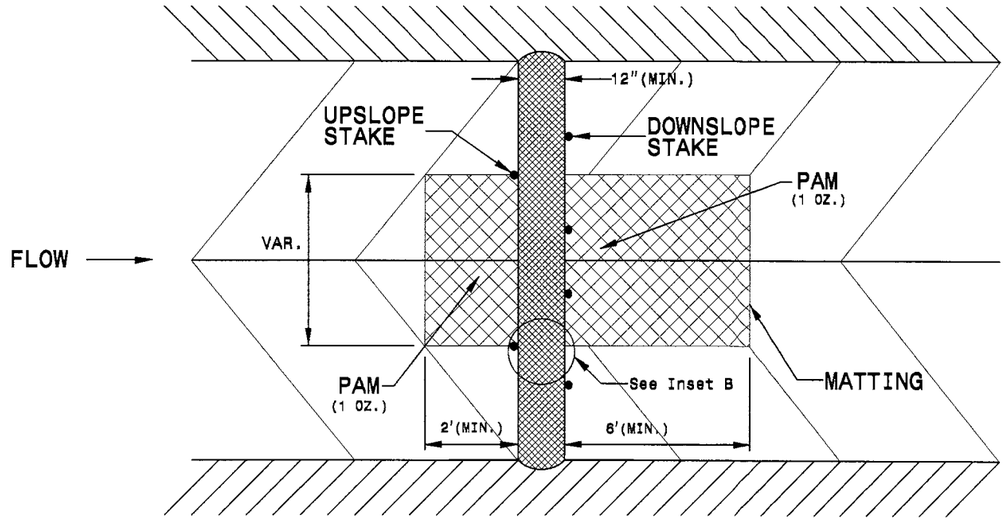

TOP VIEW

28-MAY-2014 13:21
C:\dgn\8_projects\CAD\MOLE\vzc401qsr_1305way
qsr401s_N_DOT.cel 27.0 10

PROJECT REFERENCE NO.	SHEET NO.
W-5208J	ECP-2B

DIVISION OF HIGHWAYS
STATE OF NORTH CAROLINA

SOIL STABILIZATION TIMEFRAMES

SITE DESCRIPTION	*STABILIZATION TIME*	*TIMEFRAME EXCEPTIONS*
PERIMETER DIKES, SWALES, DITCHES AND SLOPES	7 DAYS	NONE
HIGH QUALITY WATER (HQW) ZONES	7 DAYS	NONE
SLOPES STEEPER THAN 3:1	7 DAYS	IF SLOPES ARE 10' OR LESS IN LENGTH AND ARE NOT STEEPER THAN 2:1, 14 DAYS ARE ALLOWED.
SLOPES 3:1 OR FLATTER	14 DAYS	7 DAYS FOR SLOPES GREATER THAN 50' IN LENGTH.
ALL OTHER AREAS WITH SLOPES FLATTER THAN 4:1	14 DAYS	NONE, EXCEPT FOR PERIMETERS AND HQW ZONES.

PROJECT REFERENCE NO.	SHEET NO.
W-5208J	ECP-2C

DIVISION OF HIGHWAYS
STATE OF NORTH CAROLINA

SOIL STABILIZATION SUMMARY SHEET

MATTING FOR EROSION CONTROL

CONST SHEET NO.	LINE	FROM STATION	TO STATION	SIDE	ESTIMATE (SY)
5	-L MED-	24+00	28+80	CL	590
5	-L MED-	22+60	28+80	RT	500
5	-L MED-	21+30	27+56	LT	570
7&8	-L MED-	45+00	49+60	CL	620
8&9	-L MED-	49+60	52+40	CL	375
8&9	-L MED-	53+40	55+40	CL	270
8	-L MED-	48+60	49+60	LT	95
8	-L MED-	49+80	53+00	LT	295
9	-L MED-	53+40	53+00	LT	40
11	-Y3-	10+60	11+40	RT	75
11	-Y3-	18+00	19+60	RT	150
11	-Y3-	10+60	11+50	LT	85
11	-Y3-	11+60	12+20	LT	55
11	-Y3-	12+40	15+40	LT	275
11	-Y3-	18+60	20+20	LT	150
			SUBTOTAL		4145
MISCELLANEOUS MATTING TO BE INSTALLED AS DIRECTED BY THE ENGINEER					
				TOTAL	4145
				SAY	4150

PROJECT REFERENCE NO.	SHEET NO.
W-5208J	ECP-3
R/W SHEET NO.	

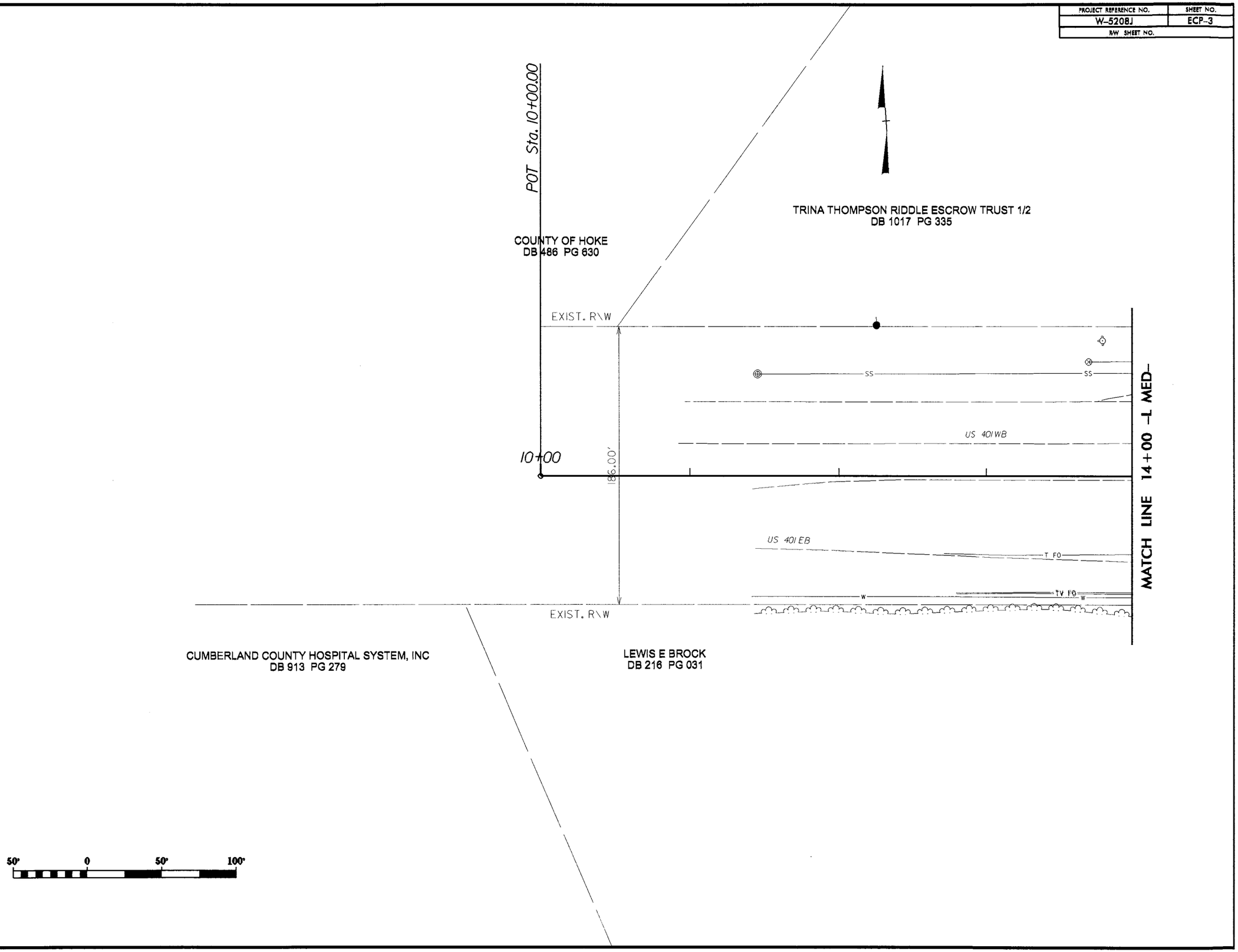

REVISIONS

8/17/99

28-MAY-2014 13:21
C:\div8_projects\rdy\HOKE\nc401@sr_1305(wayside_rd)\psh\ecp\W-5208J_ECP3.dgn

PROJECT REFERENCE NO.	SHEET NO.
W-5208J	ECP-4
R/W SHEET NO.	

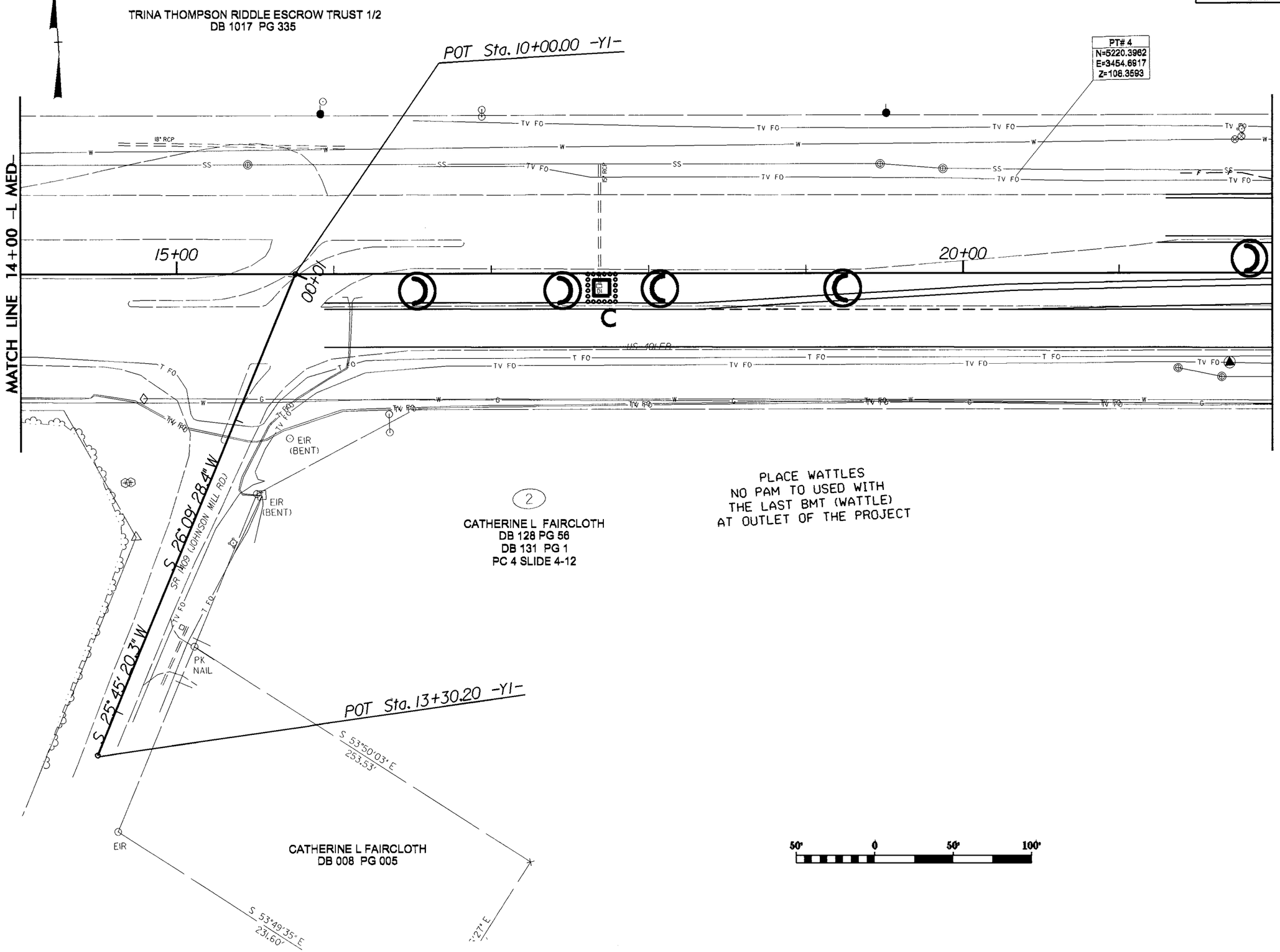

REVISIONS

8/17/99

28-MAY-2014 13:21
C:\div8_projects\rdj\HOKE\nc401@sr_1305(wayside_rd)\psh\ecp\W-5208J_ECP4.dgn
psdsus AT FRANCIS 270410

PROJECT REFERENCE NO.	SHEET NO.
W-5208J	ECP-5
R/W SHEET NO.	

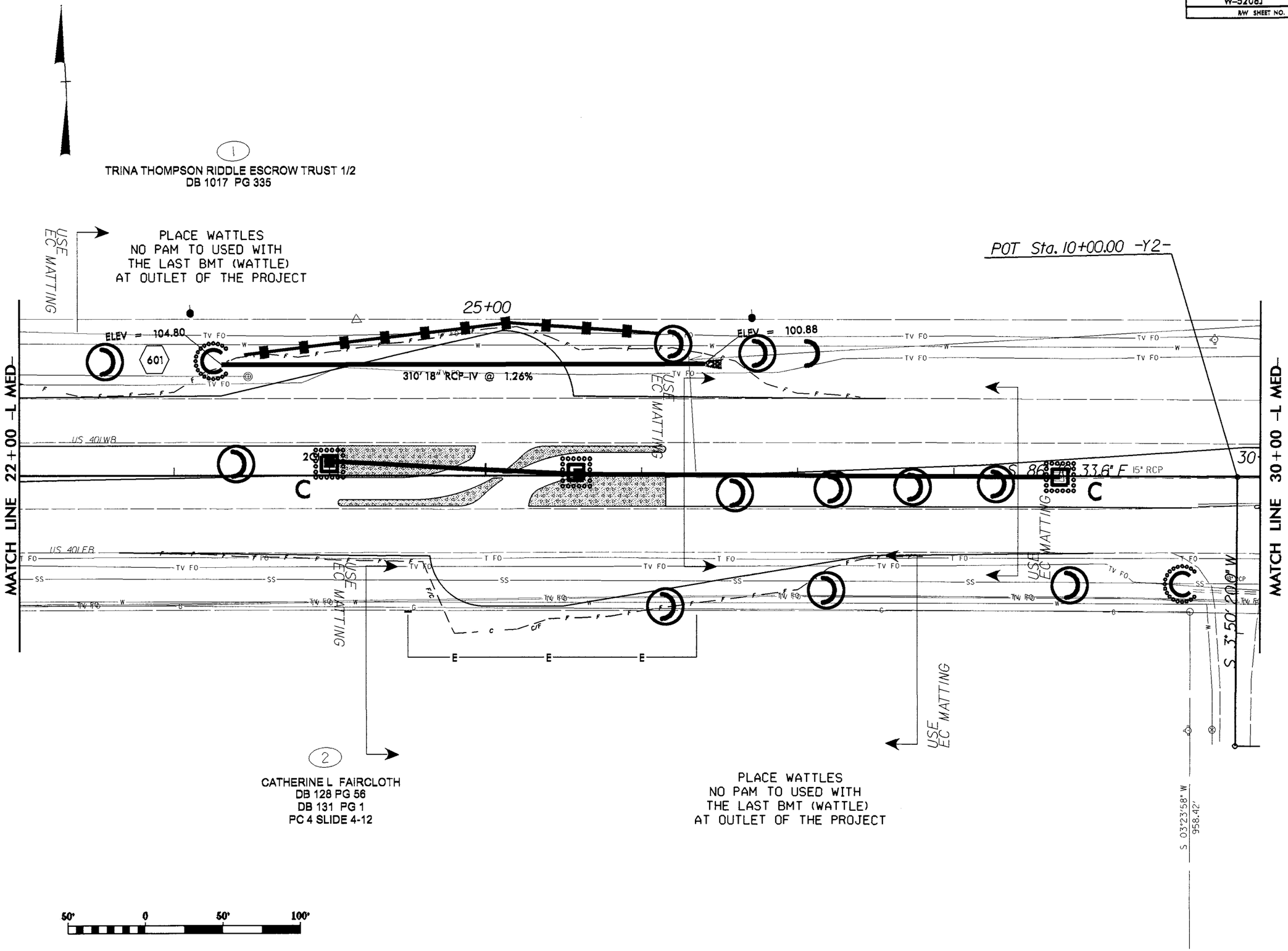

REVISIONS

8/17/99

12-JUN-2014 10:46
C:\div8_projects\rdy\HOKE\nc401@sr_1305(wayside_rd)\psh\ecp\W-5208J_ECP5.dgn

PROJECT REFERENCE NO.	SHEET NO.
W-5208J	ECP-6
R/W SHEET NO.	

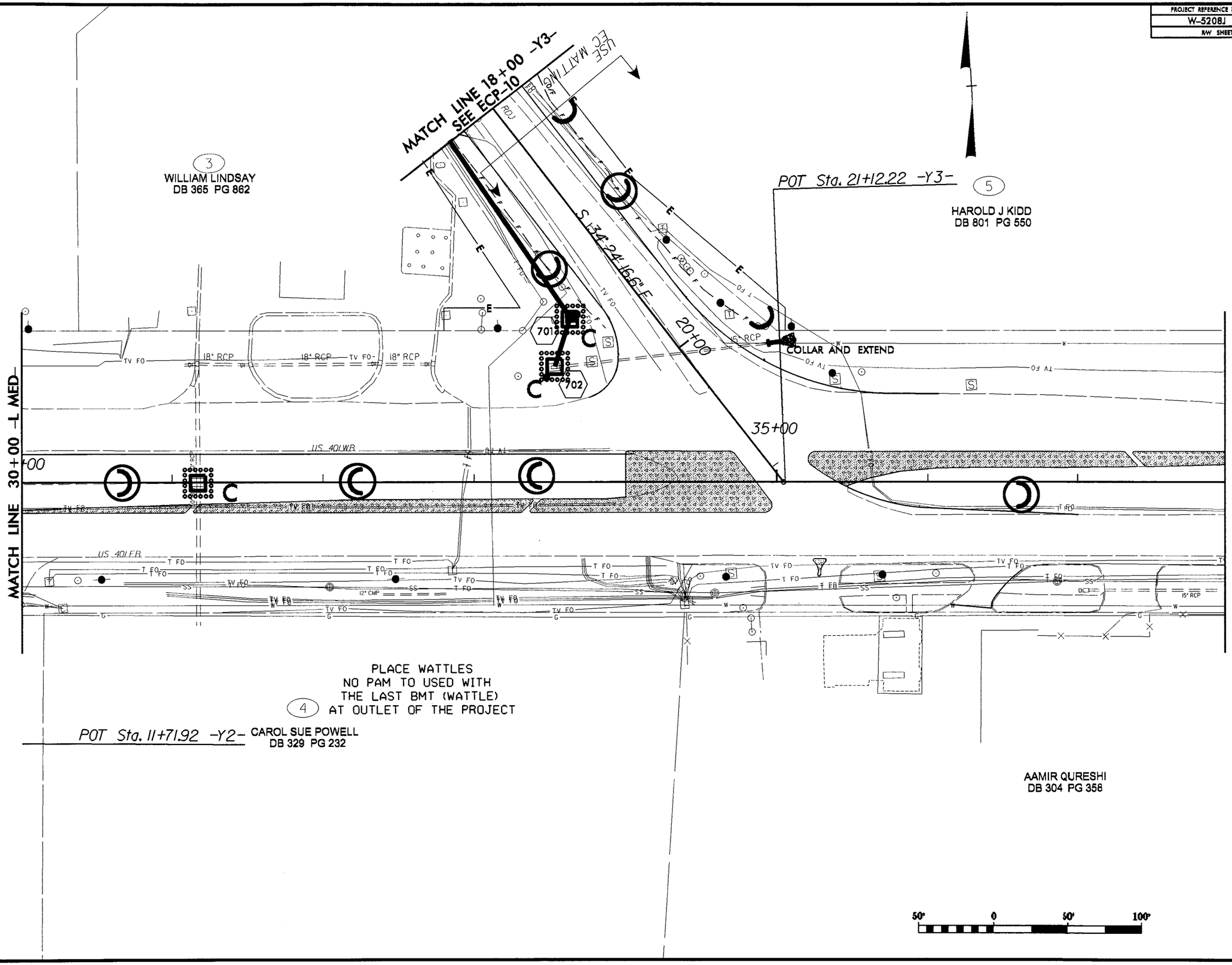

REVISIONS

8/17/99

28-MAY-2014 15:56
c:\div8_projects\rdy\HOKE\nc401@sr_1305\weyside_rdl\psh\ecp\W-5208J_ECP6.dgn

PROJECT REFERENCE NO.	SHEET NO.
W-5208J	ECP-7
R/W SHEET NO.	

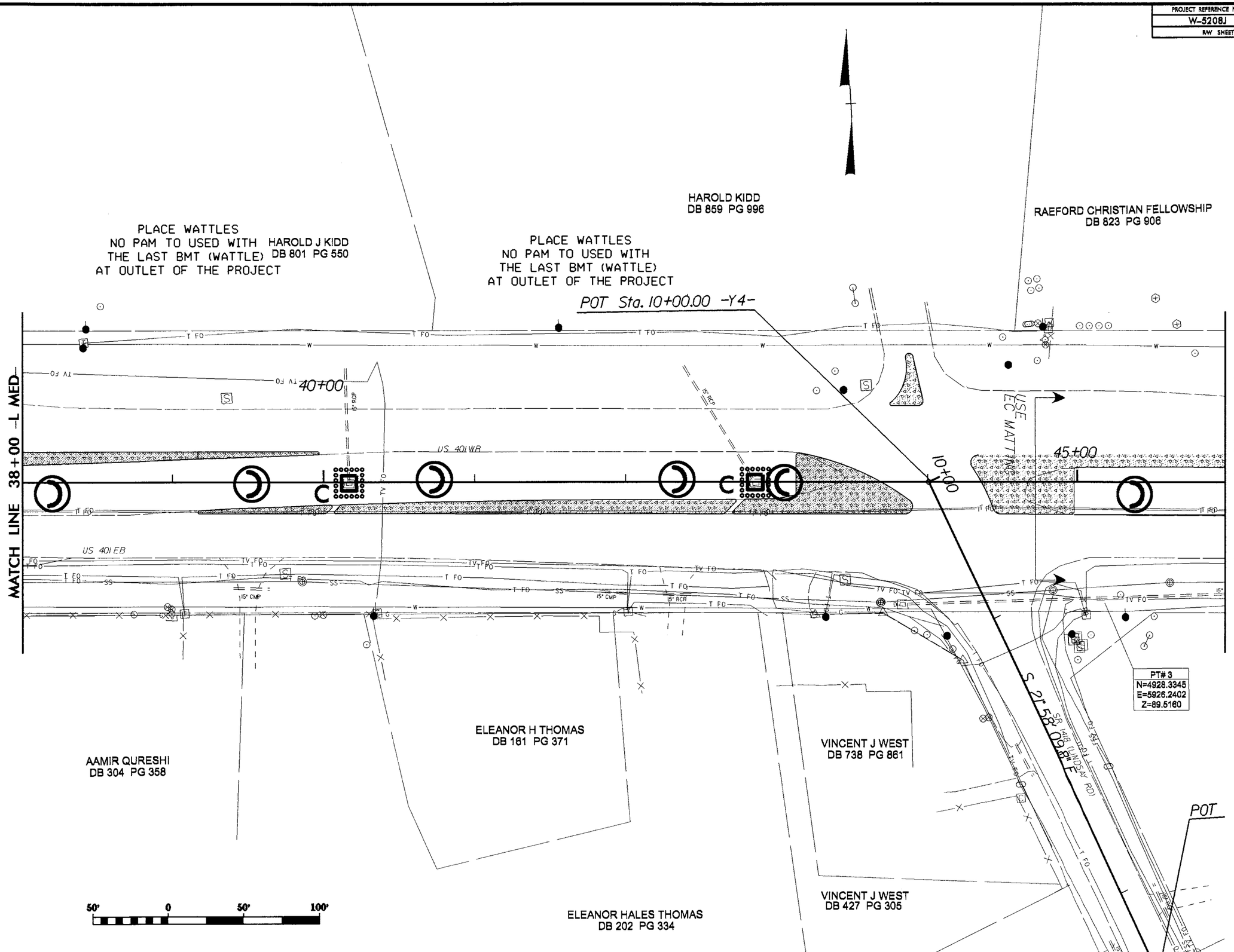

REVISIONS

8/17/99

28-MAY-2014 15:30
C:\div8_projects\rdy\HOKE\nc401@sr_1305\wayside_rdl\psh\ecp\W-5208J_ECP7.dgn

PROJECT REFERENCE NO.	SHEET NO.
W-5208J	ECP-8
R/W SHEET NO.	

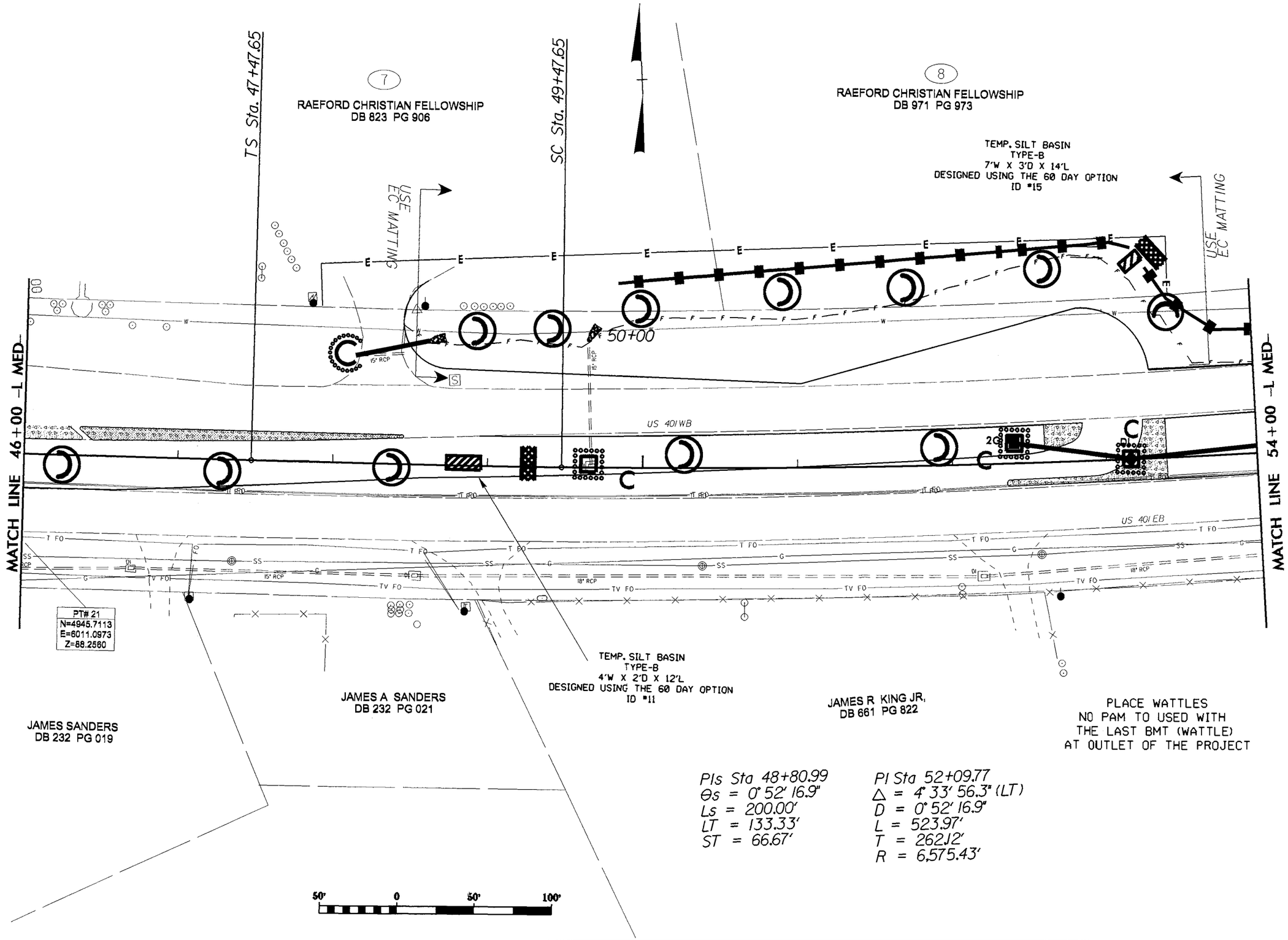

REVISIONS

8/17/99

28-MAY-2014 13:22
c:\div8_projects\rdy\HOKE\nc401@sr_1305(wayside_rd)\psh\ecp\W-5208J_ECP8.dgn

PROJECT REFERENCE NO.	SHEET NO.
W-5208J	ECP-9
R/W SHEET NO.	

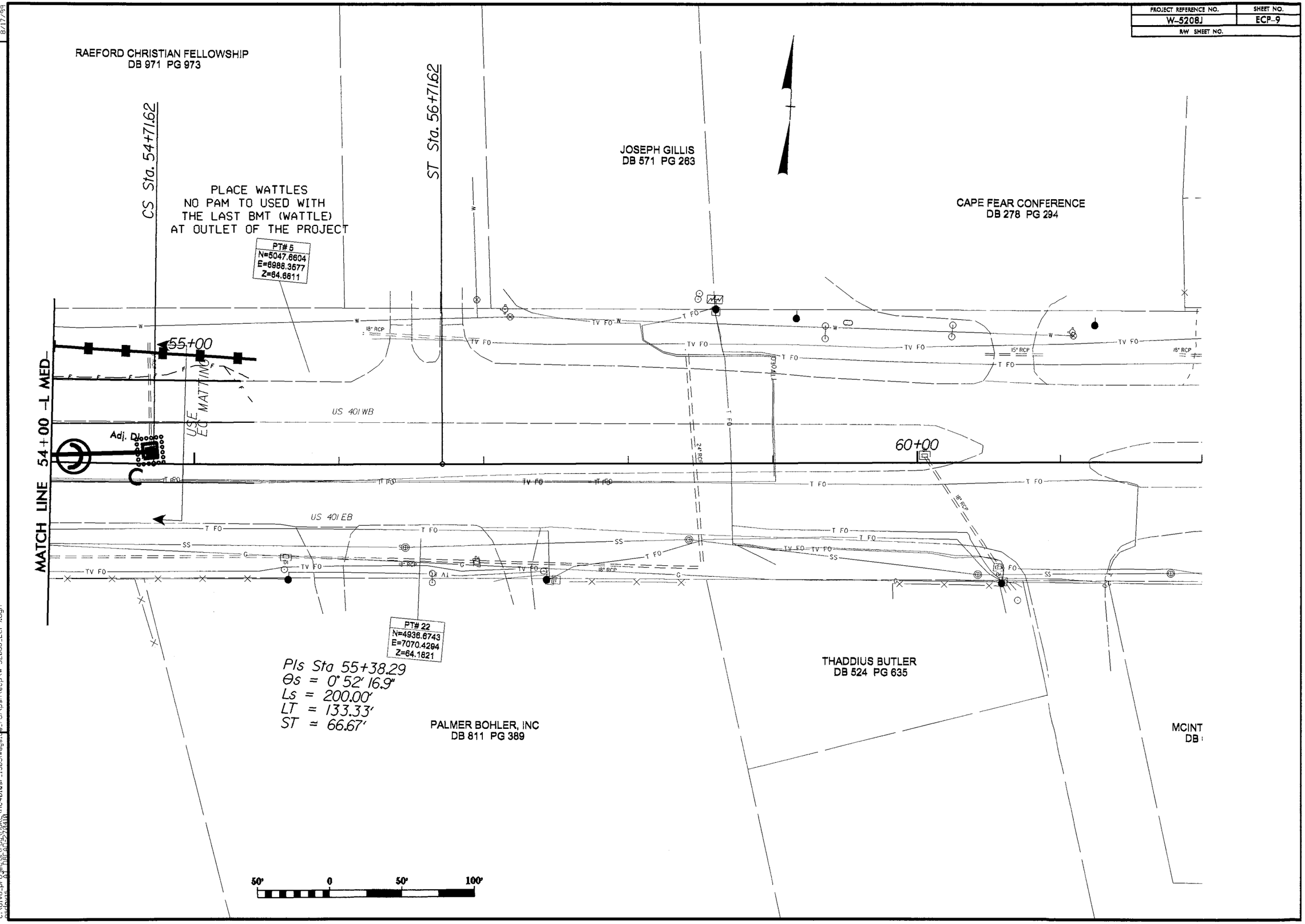

REVISIONS

8/17/99

28-MAY-2014 13:22
C:\div8-projects\rdy\HOKE\nc401@sr_1305(wayside_rd)\psh\ecp\W-5208J_ECP9.dgn

PROJECT REFERENCE NO.	SHEET NO.
W-5208J	ECP-10
R/W SHEET NO.	

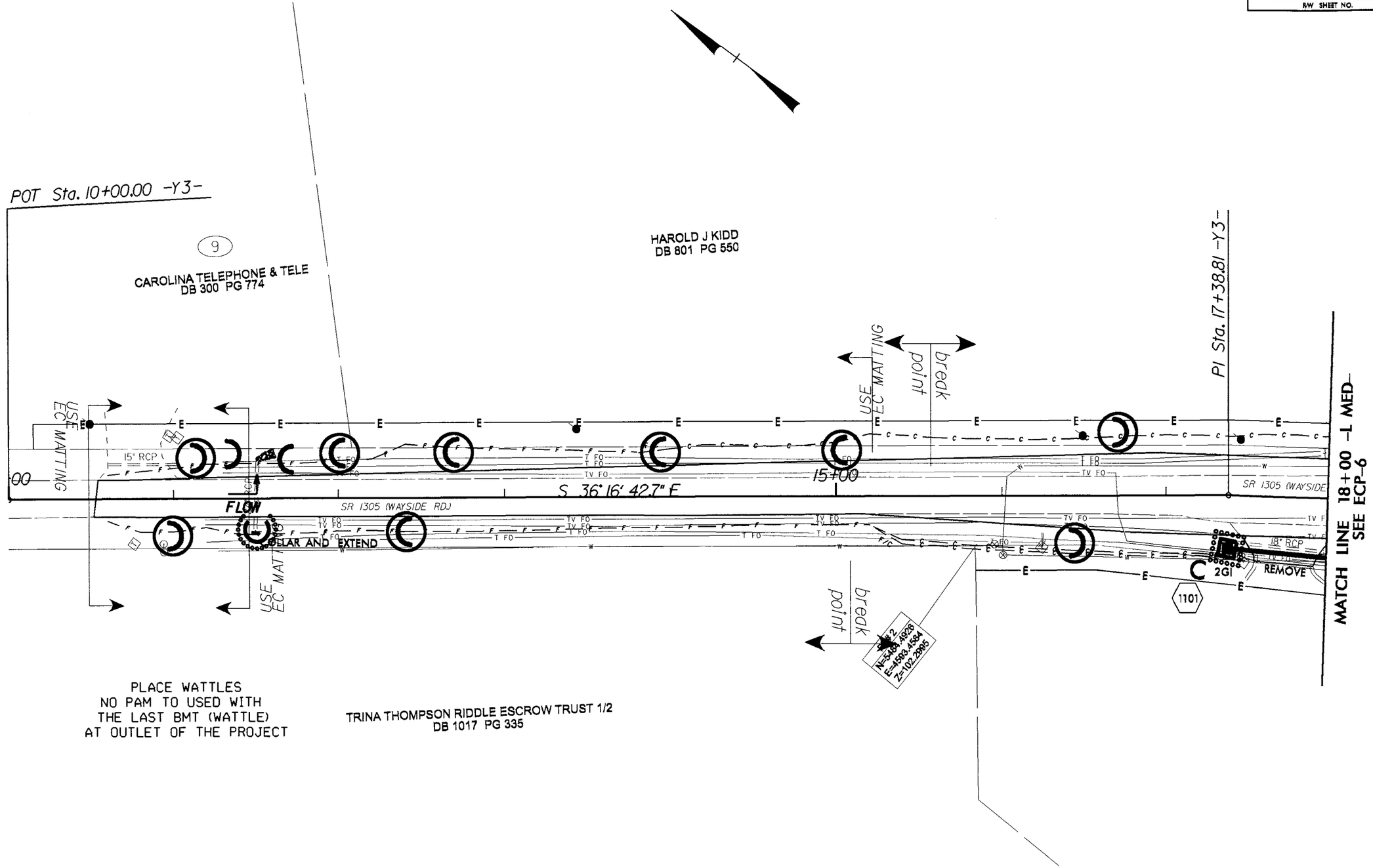

REVISIONS

8/17/99

12-JUN-2014 10:46
C:\div8_projects\rdy\HOKE\nc401@sr_1305(wayside_rd)\psh\ecp\W-5208J_ECP10.dgn

PROJ. REFERENCE NO.	SHEET NO.
W-5208J	X-A

STATE OF NORTH CAROLINA
DIVISION OF HIGHWAYS

NOTE: EMBANKMENT COLUMN DOES NOT INCLUDE BACKFILL FOR UNDERCUT

CROSS-SECTION SUMMARY

Station L_Med	Uncl. Exc. (cu. yd.)	Embt (cu. yd.)	Station L_Med	Uncl. Exc. (cu. yd.)	Embt (cu. yd.)	Station L_Med	Uncl. Exc. (cu. yd.)	Embt (cu. yd.)	Station L_Med	Uncl. Exc. (cu. yd.)	Embt (cu. yd.)	Station Y3	Uncl. Exc. (cu. yd.)	Embt (cu. yd.)
16+00.00	0	0	26+60.00	19	24	37+60.00	0	4	48+60.00	11	13	12+80.00	3	7
16+20.00	2	1	26+80.00	17	24	37+80.00	0	5	48+80.00	17	19	13+00.00	3	7
16+40.00	3	1	27+00.00	15	22	38+00.00	0	6	49+00.00	16	22	13+20.00	3	7
16+60.00	3	2	27+20.00	13	17	38+20.00	0	7	49+20.00	16	23	13+40.00	3	6
16+80.00	2	3	27+40.00	11	14	38+40.00	0	8	49+40.00	16	21	13+60.00	3	4
17+00.00	2	3	27+60.00	9	14	38+60.00	0	8	49+60.00	16	16	13+80.00	4	3
17+20.00	2	4	27+80.00	7	15	38+80.00	0	9	49+80.00	20	13	14+00.00	5	2
17+40.00	1	5	28+00.00	7	15	39+00.00	0	10	50+00.00	21	26	14+20.00	8	1
17+60.00	1	7	28+20.00	8	14	39+20.00	0	10	50+20.00	18	40	14+40.00	10	1
17+80.00	1	9	28+40.00	7	13	39+40.00	0	9	50+40.00	14	43	14+60.00	9	1
18+00.00	2	6	28+60.00	7	15	39+60.00	0	9	50+60.00	11	41	14+80.00	9	1
18+20.00	2	3	28+80.00	6	16	39+80.00	0	13	50+80.00	11	34	15+00.00	11	1
18+40.00	3	3	29+00.00	6	12	40+00.00	0	17	51+00.00	10	28	15+20.00	18	1
18+60.00	3	2	29+20.00	7	9	40+20.00	0	21	51+20.00	11	33	15+40.00	26	1
18+80.00	4	2	29+40.00	6	7	40+40.00	0	21	51+40.00	14	48	15+60.00	26	1
19+00.00	5	1	29+60.00	5	6	40+60.00	0	19	51+60.00	16	64	15+80.00	23	1
19+20.00	5	2	29+80.00	4	5	40+80.00	0	14	51+80.00	18	77	16+00.00	24	1
19+40.00	6	3	30+00.00	3	3	41+00.00	0	11	52+00.00	18	94	16+20.00	24	1
19+60.00	6	4	30+20.00	2	4	41+20.00	0	11	52+20.00	16	110	16+40.00	23	1
19+80.00	7	5	30+40.00	2	5	41+40.00	0	10	52+40.00	18	120	16+60.00	23	1
20+00.00	8	6	30+60.00	2	6	41+60.00	0	10	52+60.00	16	161	16+80.00	23	2
20+20.00	8	6	30+80.00	2	7	41+80.00	0	9	52+70.00	6	92	17+00.00	23	3
20+40.00	8	7	31+00.00	2	9	42+00.00	0	7	52+80.00	7	88	17+20.00	21	3
20+60.00	8	7	31+20.00	2	7	42+20.00	1	6	53+00.00	15	162	17+40.00	20	4
20+80.00	9	6	31+40.00	2	5	42+40.00	1	6	53+20.00	15	123	17+60.00	24	2
21+00.00	9	6	31+60.00	2	4	42+60.00	0	8	53+35.00	9	45	17+80.00	24	0
21+20.00	8	7	31+80.00	2	2	42+80.00	0	11	53+40.00	2	4	18+00.00	21	0
21+40.00	9	8	32+00.00	2	1	43+00.00	0	9	53+60.00	3	13	18+20.00	16	1
21+60.00	11	10	32+20.00	2	1	43+20.00	4	3	53+80.00	4	11	18+40.00	12	3
21+80.00	12	12	32+40.00	2	1	43+40.00	6	0	54+00.00	4	10	18+60.00	11	4
22+00.00	11	14	32+60.00	2	0				54+20.00	4	10	18+80.00	10	4
22+20.00	9	16	32+80.00	2	1	Station	Uncl. Exc.	Embt	54+40.00	4	7	19+00.00	9	3
22+40.00	10	14	33+00.00	2	3				54+45.98	1	1	19+20.00	7	2
22+60.00	11	12	33+20.00	2	2	L_Med	(cu. yd.)	(cu. yd.)	54+60.00	2	9	19+40.00	6	2
22+80.00	11	12	33+40.00	2	1	44+80.00	0	0	54+80.00	3	13	19+60.00	4	2
23+00.00	12	12	33+60.00	2	1	45+00.00	10	0	55+00.00	3	4	19+80.00	3	3
23+20.00	11	13	33+80.00	2	1	45+20.00	3	1	55+20.00	3	3	20+00.00	3	4
23+40.00	13	17	34+00.00	9	0	45+40.00	2	1	55+40.00	2	2	20+20.00	3	8
23+60.00	15	22	34+20.00	13	0	45+60.00	1	1						
23+80.00	17	22				45+80.00	1	1	Station	Uncl. Exc.	Embt			
24+00.00	19	22	Station	Uncl. Exc.	Embt	46+00.00	1	2						
24+20.00	19	22				46+20.00	1	3	Y3	(cu. yd.)	(cu. yd.)			
24+40.00	19	20	L_Med	(cu. yd.)	(cu. yd.)	46+40.00	1	4	10+60.00	0	0			
24+60.00	20	18	35+60.00	0	0	46+60.00	1	5	10+80.00	0	0			
24+80.00	27	20	35+80.00	4	0	46+80.00	1	6	11+00.00	1	1			
25+00.00	34	21	36+00.00	5	0	47+00.00	2	6	11+20.00	1	1			
25+20.00	36	18	36+20.00	4	1	47+20.00	3	7	11+40.00	1	3			
25+40.00	34	19	36+40.00	3	1	47+40.00	3	7	11+60.00	1	3			
25+60.00	27	24	36+60.00	3	1	47+60.00	4	7	11+80.00	2	4			
25+80.00	22	31	36+80.00	2	2	47+80.00	5	7	12+00.00	2	4			
26+00.00	21	35	37+00.00	2	2	48+00.00	6	7	12+20.00	2	4			
26+20.00	18	36	37+20.00	1	3	48+20.00	6	8	12+40.00	3	6			
26+40.00	18	30	37+40.00	1	3	48+40.00	5	9	12+60.00	3	7			

Approximate quantities only. Unclassified excavation, borrow excavation, fine grading, clearing and grubbing, silt excavation and removal of concrete pavement will be paid for at the lump sum price for "Grading".

NOTE:
Shoulder Material included in Embankment quantities listed

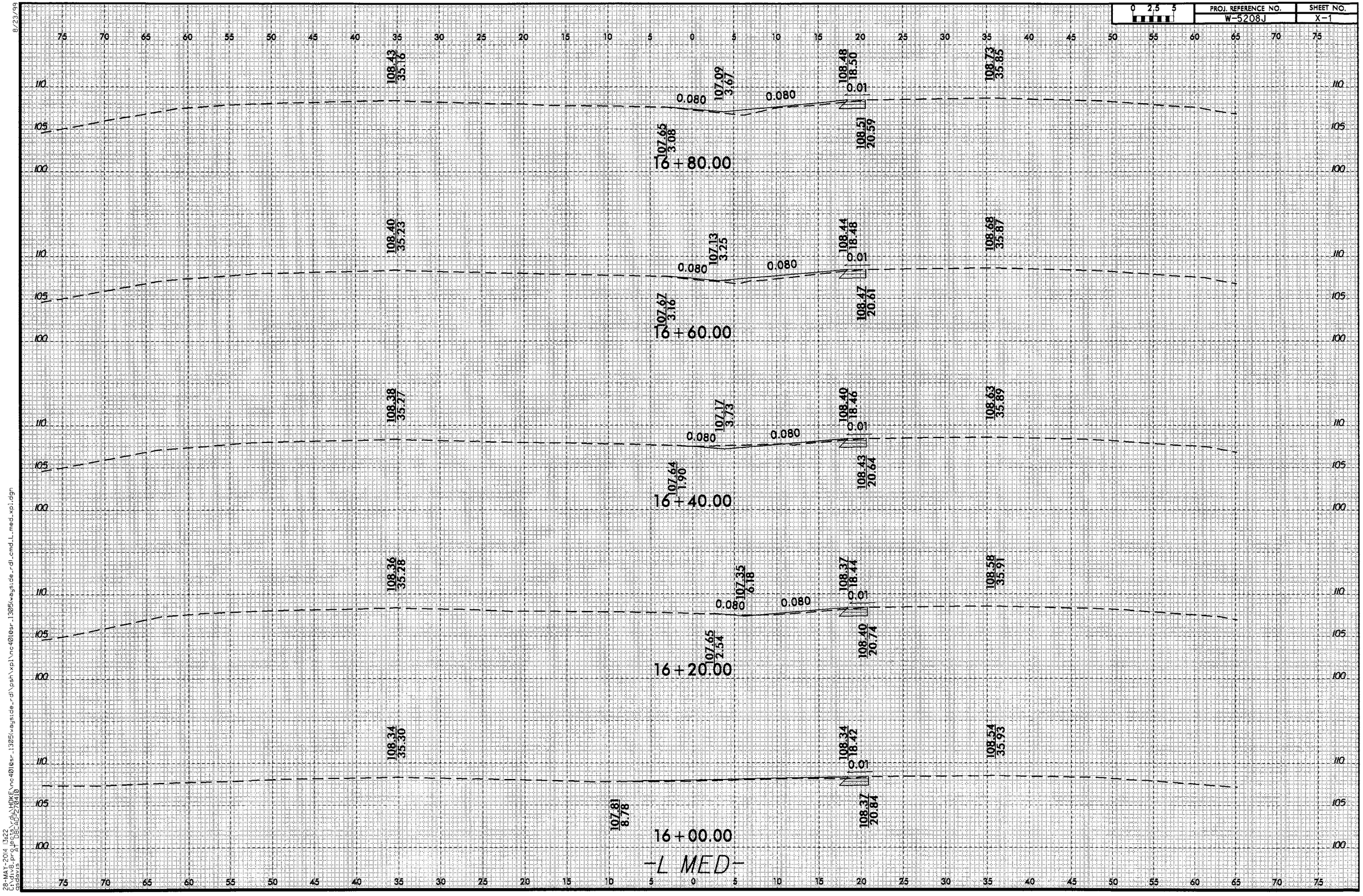

8/23/99

28-MAY-2014 13:22
C:\div8_projects\rdy\HOKE\nc4010sr_1305(wayside_rd)\psh\xpl\nc4010sr_1305(wayside_rd)_cmd_L_med_xpl.dgn
gsdavis AT DBCAD-270410

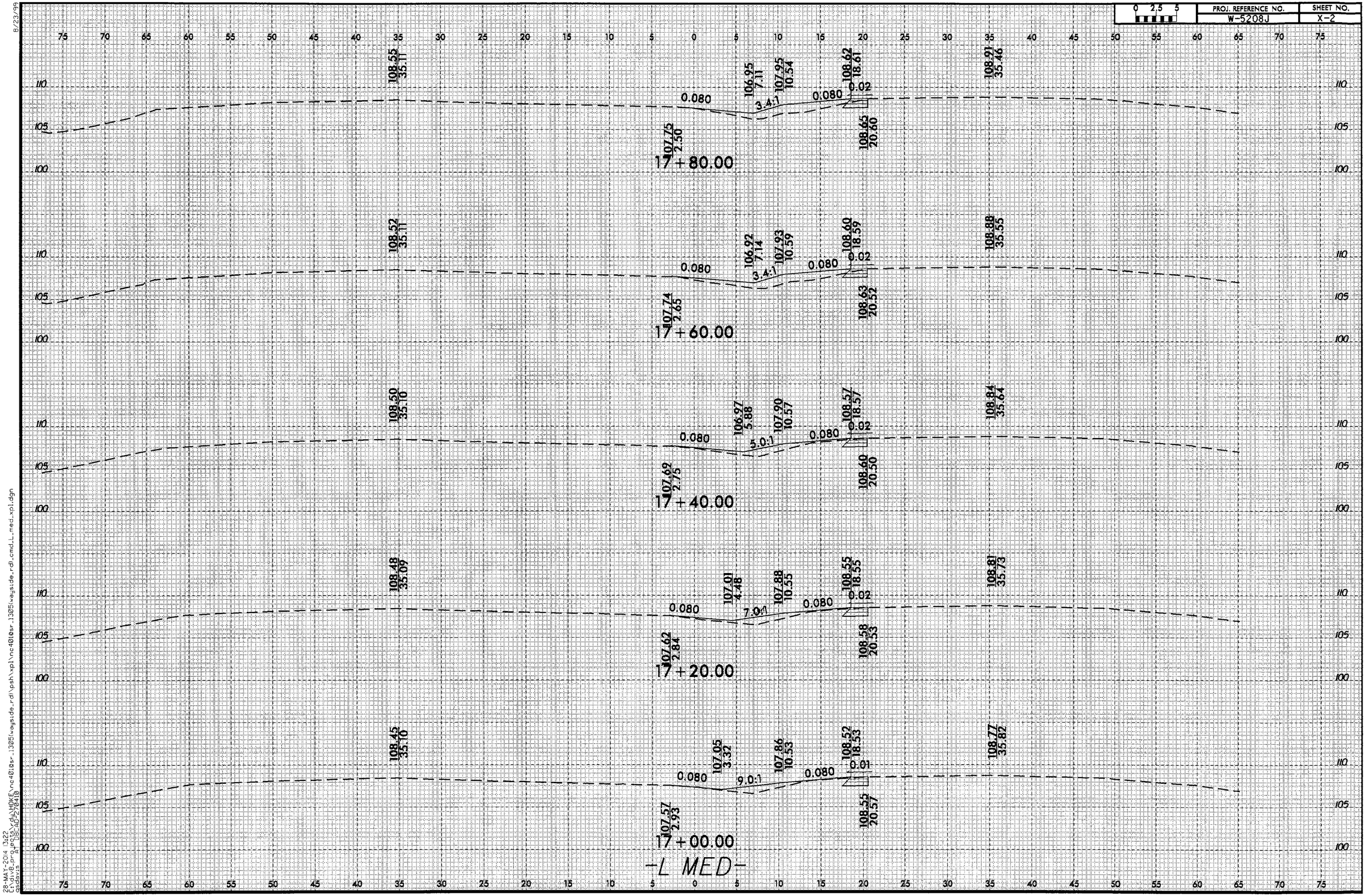

PROJ. REFERENCE NO.
W-5208J
SHEET NO.
X-2
0 2.5 5
17+80.00
108.55 35.11
106.95 7.11
107.95 10.54
108.62 18.61
108.91 35.46
0.080
3.4:1
0.080
0.02
107.75 2.50
108.65 20.60
17+60.00
108.52 35.11
106.92 7.14
107.93 10.59
108.60 18.59
108.88 35.55
0.080
3.4:1
0.080
0.02
107.74 2.65
108.63 20.52
17+40.00
108.50 35.10
106.97 5.88
107.90 10.57
108.57 18.57
108.84 35.64
0.080
5.0:1
0.080
0.02
107.69 2.75
108.60 20.50
17+20.00
108.48 35.09
107.01 4.48
107.88 10.55
108.55 18.55
108.81 35.73
0.080
7.0:1
0.080
0.02
107.62 2.84
108.58 20.53
17+00.00
108.45 35.10
107.05 3.32
107.86 10.53
108.52 18.53
108.77 35.82
0.080
9.0:1
0.080
0.01
107.57 2.93
108.55 20.57
-L MED-

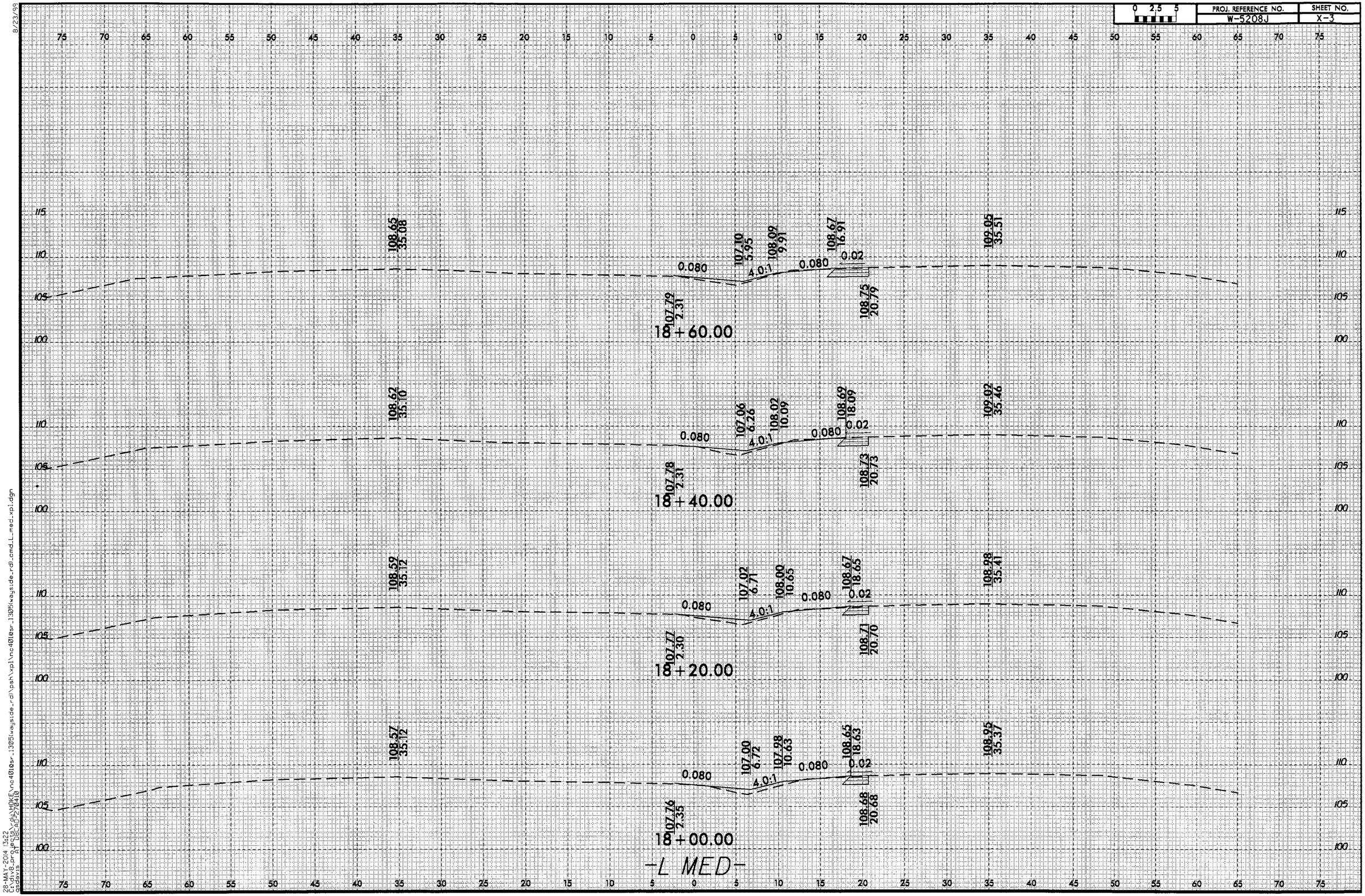

8/23/99

28-MAY-2014 13:22
C:\div8_projects\rdy\HOKE\nc4010sr_1305(wayside_rd)\psh\xpl\nc4010sr_1305(wayside_rd)_cmd_L_med_xpl.dgn
gsdavis AT DBCAD-270410

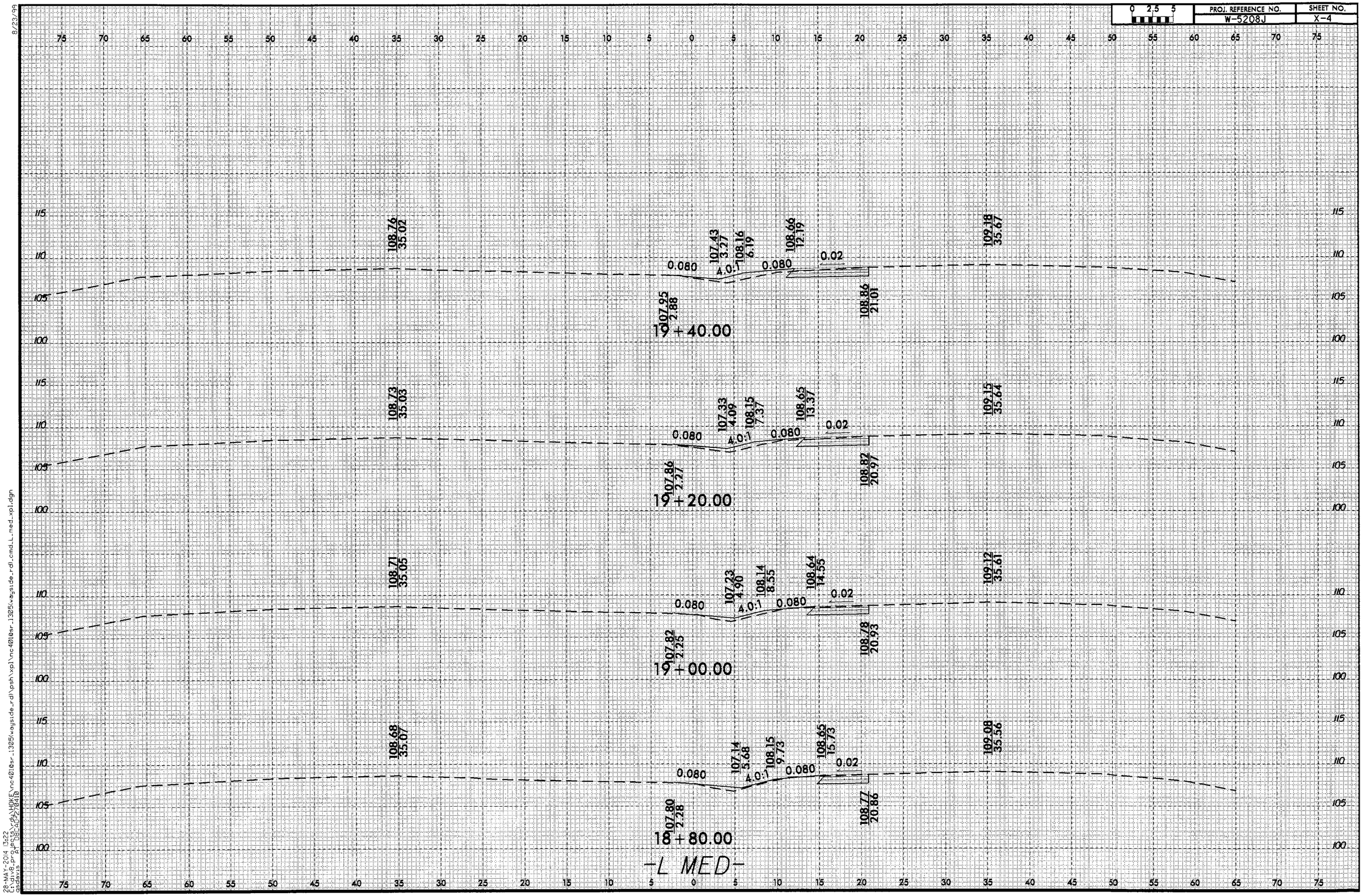

8/23/99

28-MAY-2014 13:22
t:\div8_projects\rdy\HOKE\nc4010sr_1305\wayside_rdl\psh\xpl\nc4010sr_1305\wayside_rdl_cmd_L_med_xpl.dgn
gsdavis AT DBCAD-270410

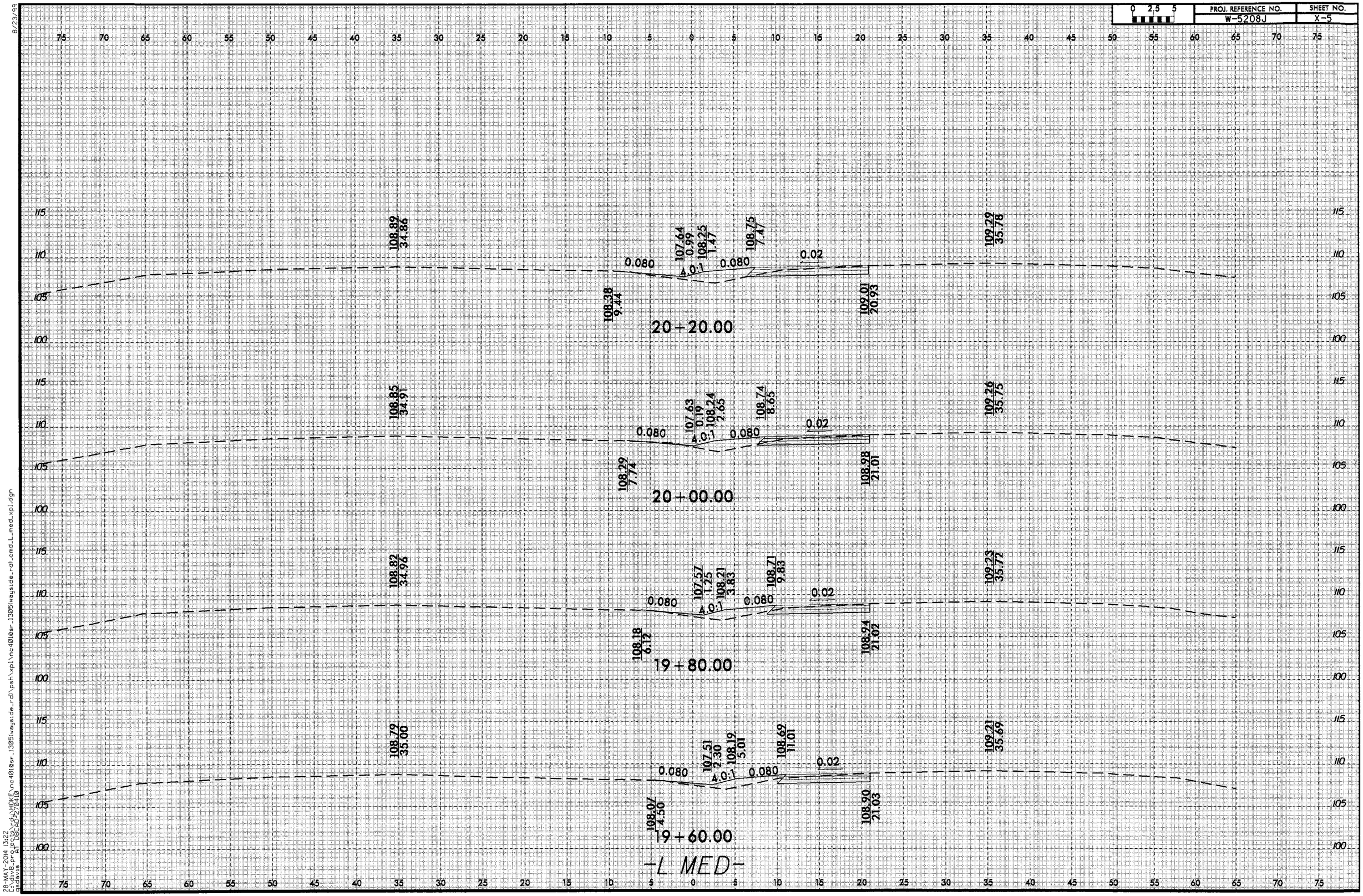

8/23/99

28-MAY-2014 13:22
C:\div8_projects\rdy\HOKE\nc401@sr_1305(wayside_rd)\psh\xpl\nc401@sr_1305(wayside_rd)_cmd_L_med_xpl.dgn
gsdavis AT DBCAD-270410

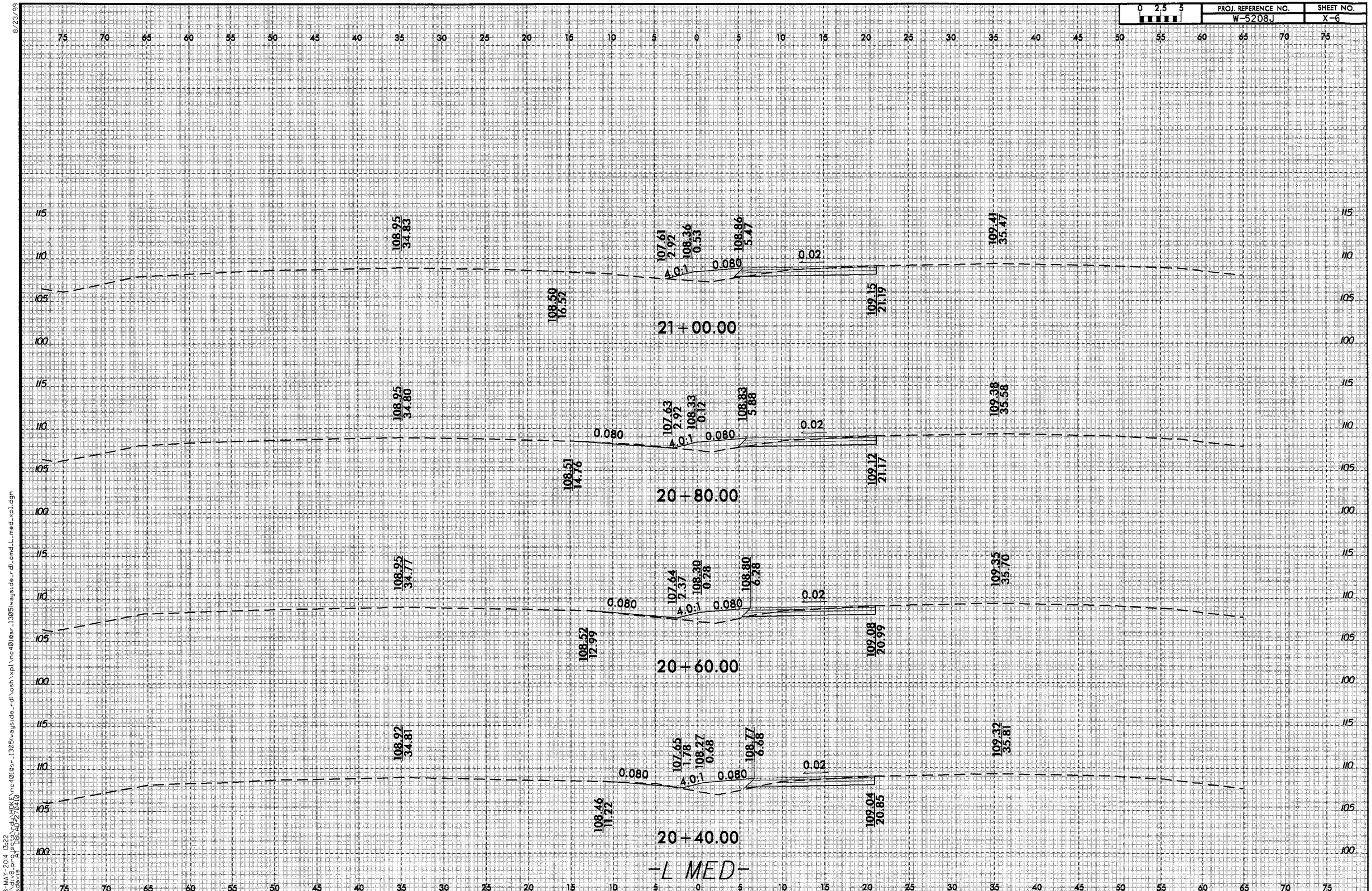

8/23/99

28-MAY-2014 13:22
C:\div8_projects\rdy\HOKE\nc401@sr_1305\wayside_rd\psh\xpl\nc401@sr_1305\wayside_rd_cmd_L_med_xpl.dgn
gsdavis AT DBCAD-270410

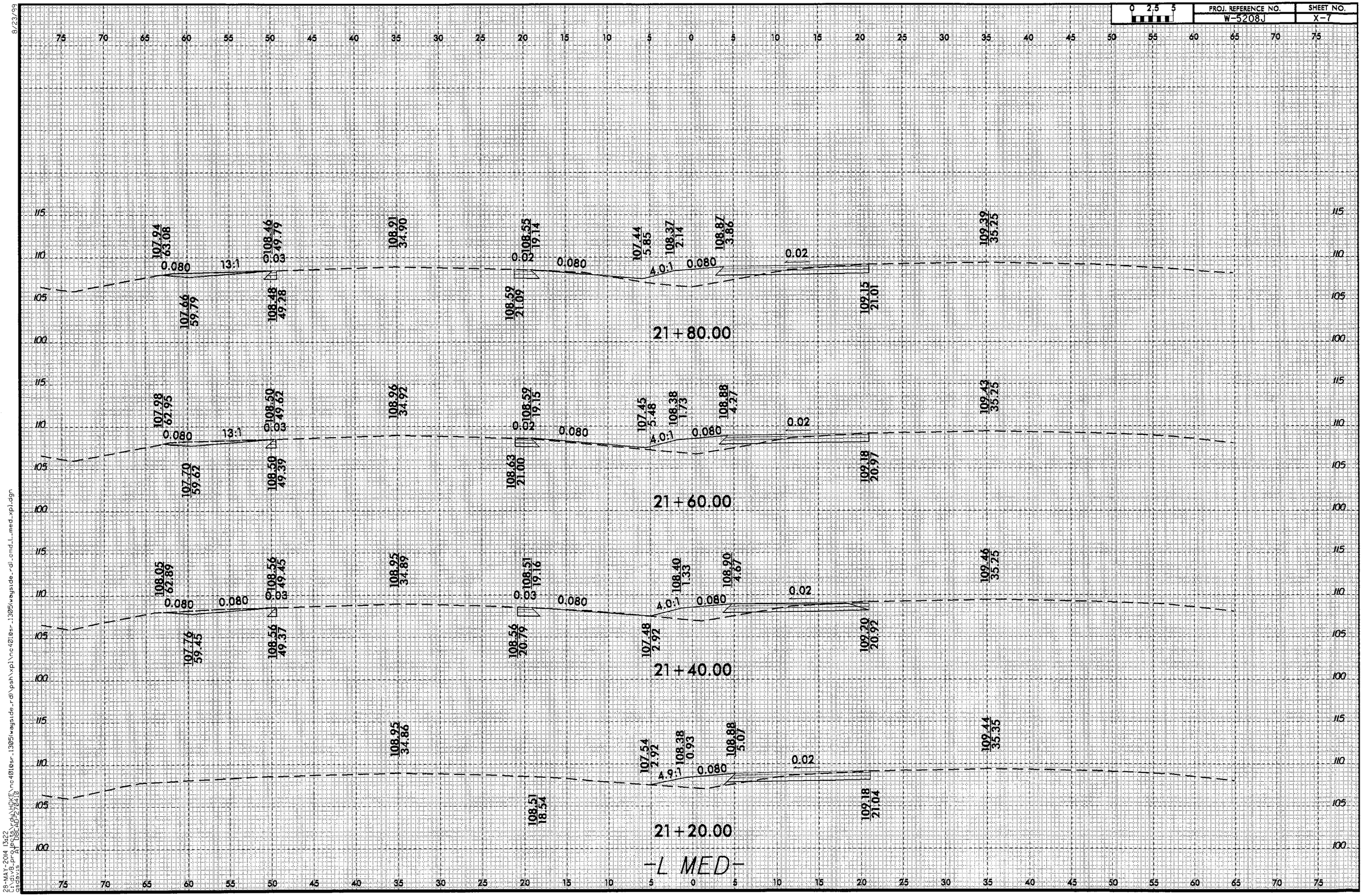

8/23/99

28-MAY-2014 13:22
C:\dv8_projects\rdy\HOKE\nc401@sr_1305\wayside_rd\psh\xpl\nc401@sr_1305\wayside_rd\cmd_L_med_xpl.dgn
asdavis AT DBCAD-270410

8/23/99

0 2.5 5	PROJ. REFERENCE NO.	SHEET NO.
	W-5208J	X-8

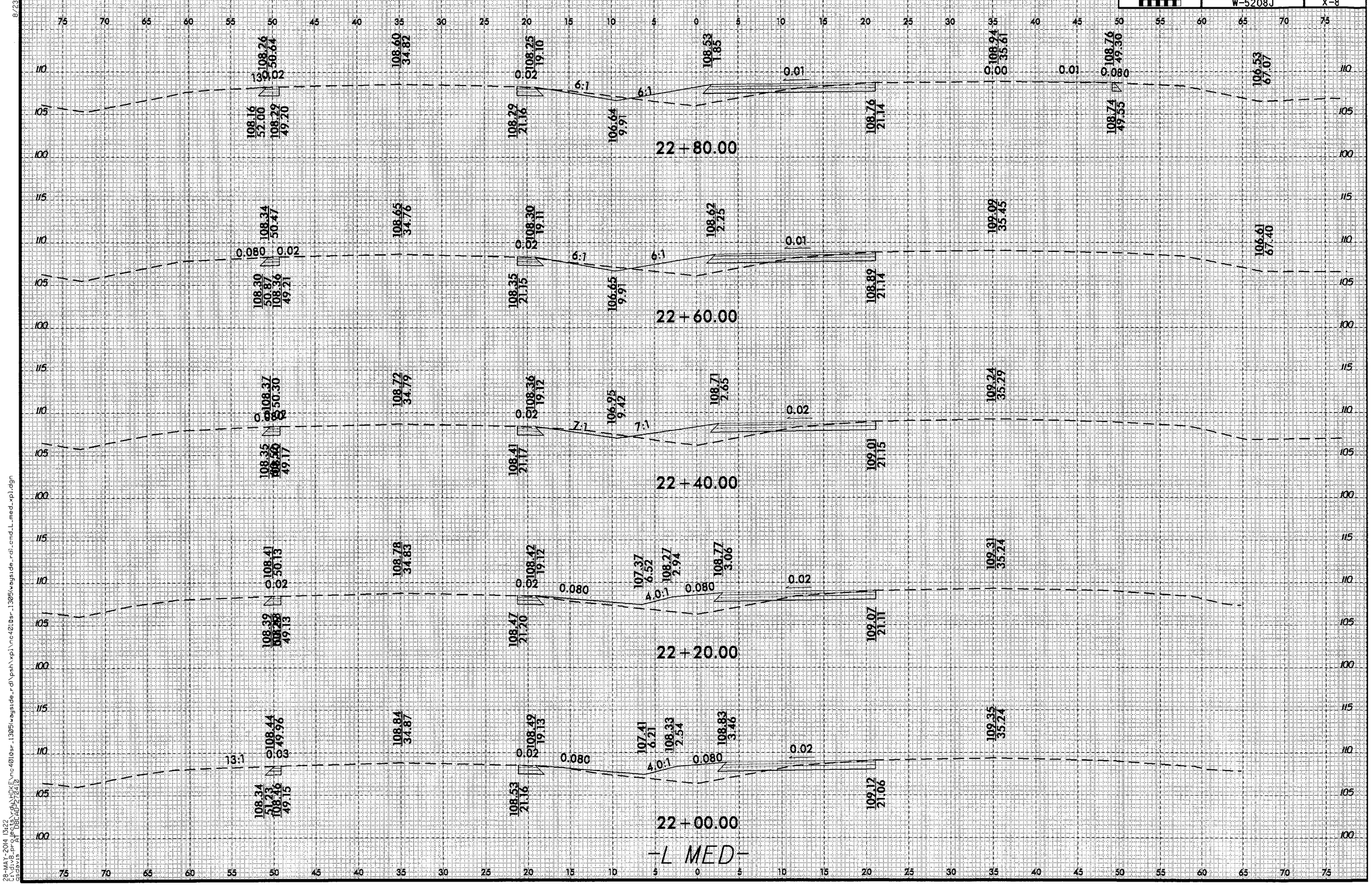

28-MAY-2014 13:22
C:\dive8.prj\c08_rdwy\DGN\nc4010sr-1305\wayside_rd\psh\xp1\nc4010sr-1305\wayside_rd\cmdL_med_xp1.dgn
$$$$USER
$$$$PROJECT

8/23/99

0 2.5 5	PROJ. REFERENCE NO.	SHEET NO.
	W-5208J	X-9

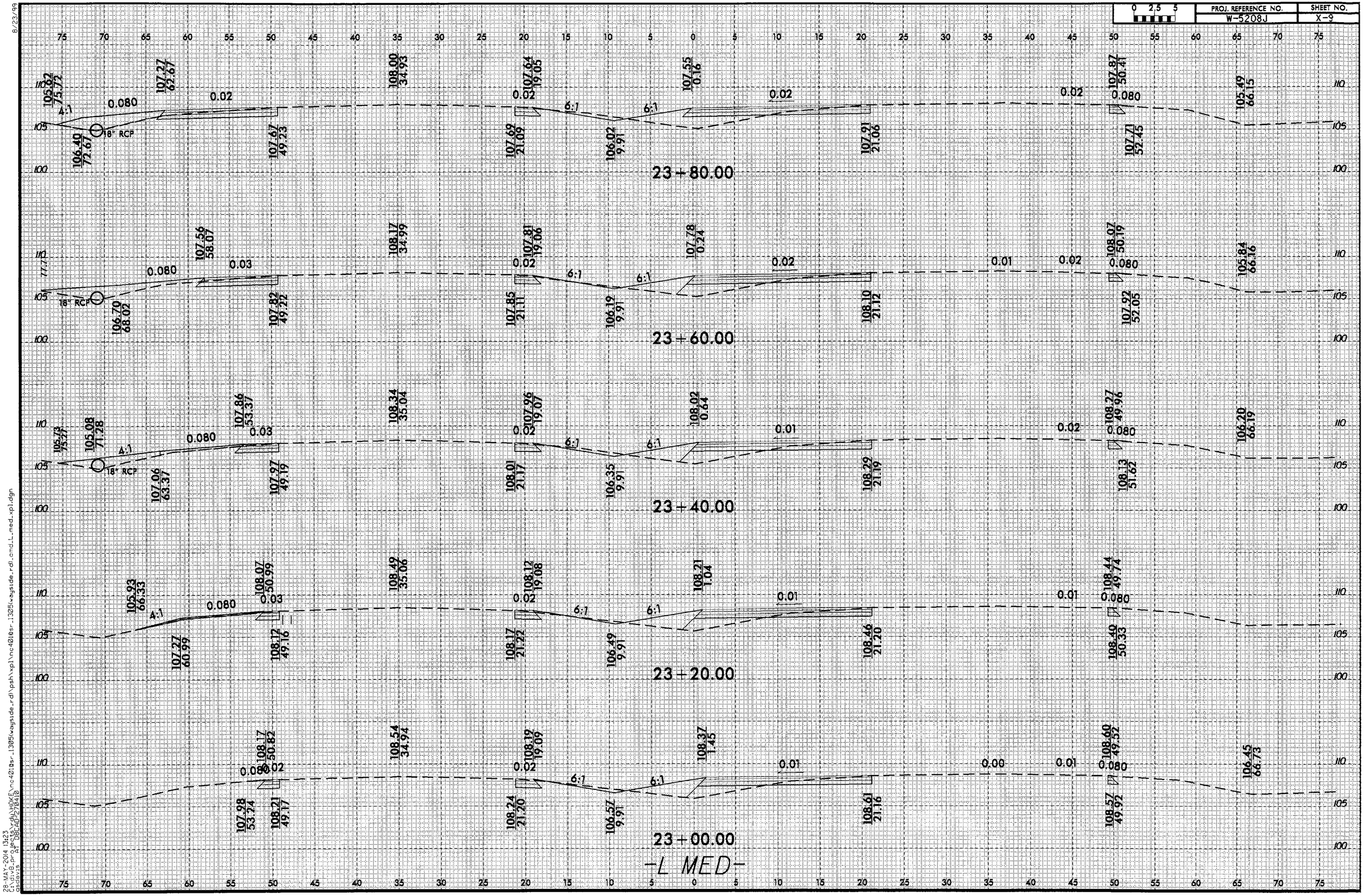

28-MAY-2014 13:23
C:\dgn_prj\98_std\MOVE\nc4018sr_1305\wayside_rd\psh\xpl\nc4018sr_1305\wayside_rd\cmd\L_med_xpl.dgn
Bentley MicroStation V8 XM Edition (08.11.07.443)

8/23/99

28-MAY-2014 13:23
C:\div8_PROJ\div\HOKE\nc401bs-1305\wayside_rd\psn\xpl\nc401bs_1305(wayside_rd)_cmd_L_med_xpl.dgn
$USER (HOKE)
$USER_PROJ_DIR=2014/0

150 140 130 120 110 100 90 80 70 60 50 40 30 20 10 0 10 20 30 40 50 60 70 80 90 100 110 120 130 140 150

120 110 100 90

25+00.00

105.25 90.59 | 104.97 93.85 | 0.080 | 0.03 | 18" RCP | 106.49 49.49 | 106.03 0.00 | 105.95 4.04 | 106.19 10.77 | 0.02 | 0.02 | 106.50 21.06 | 106.36 21.31 | 106.61 35.73 | 106.34 49.25 | 0.09 | 0.02 | 105.32 83.76 | 0.08 | 104.30 96.04 | 2.0 | 104.95 106.70

24+80.00

105.61 85.94 | 105.22 90.35 | 0.080 | 0.03 | 18" RCP | 106.47 49.47 | 107.02 34.95 | 106.40 5.59 | 106.28 0.00 | 106.63 19.37 | 0.02 | 0.02 | 0.02 | 106.73 21.03 | 106.49 11.85 | 106.66 21.42 | 106.92 35.65 | 106.68 49.32 | 0.03 | 106.20 77.51 | 0.08 | 104.50 94.22 | 2.0 | 105.13 101.61

24+60.00

105.97 81.29 | 105.45 87.18 | 0.080 | 0.03 | 18" RCP | 106.93 49.38 | 107.24 34.96 | 106.89 19.01 | 106.83 0.01 | 106.81 15.14 | 106.88 19.33 | 0.02 | 0.02 | 0.02 | 106.94 21.05 | 106.92 21.40 | 107.17 35.78 | 0.01 | 106.97 78.47 | 106.94 91.30 | 0.03 | 0.08 | 104.64 97.46 | 106.69 54.95

24+40.00

106.32 76.63 | 105.62 84.67 | 0.080 | 0.03 | 18" RCP | 107.14 49.28 | 107.46 34.86 | 107.09 19.02 | 106.82 1.32 | 107.13 19.32 | 0.02 | 0.02 | 107.14 21.08 | 107.07 15.32 | 107.17 21.36 | 107.42 35.93 | 0.01 | 107.25 78.79 | 107.23 91.08 | 0.03 | 0.08 | 106.92 54.58

24+20.00

106.66 71.98 | 105.79 81.97 | 0.080 | 0.03 | 18" RCP | 107.35 49.19 | 107.67 34.83 | 107.29 19.03 | 107.27 1.30 | 107.39 19.30 | 0.02 | 0.02 | 107.34 21.10 | 106.32 15.30 | 107.47 21.30 | 107.68 36.08 | 0.01 | 107.50 79.21 | 107.47 91.86 | 0.03 | 0.08 | 107.20 54.29

24+00.00

105.24 79.05 | 106.27 87.38 | 0.080 | 0.03 | 18" RCP | 107.51 49.21 | 107.84 34.88 | 107.47 19.04 | 105.85 9.31 | 107.30 0.57 | 0.02 | 0.02 | 0.02 | 107.51 21.09 | 107.67 21.17 | 107.67 50.63 | 0.02 | 0.080 | 107.43 53.67

-L MED-

90 100 110 120

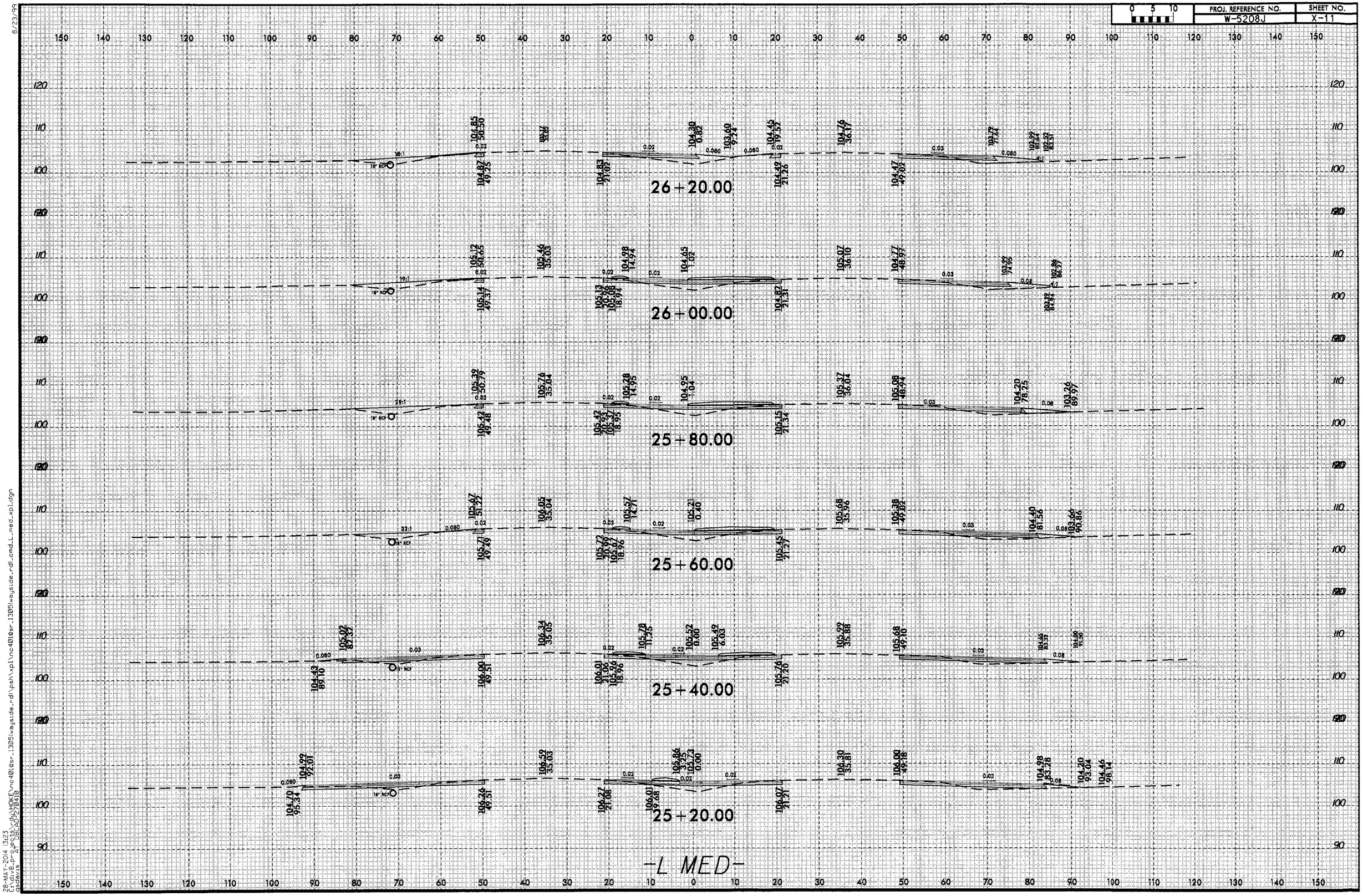

8/23/99
28-MAY-2014 13:23
C:\div8_projects\rdy\HOKE\nc4010sr_1305(wayside_rd)\psh\xpl\nc4010sr_1305(wayside_rd)_cmd_L_med_xpl.dgn
gsdavis AT DBCAD-270410

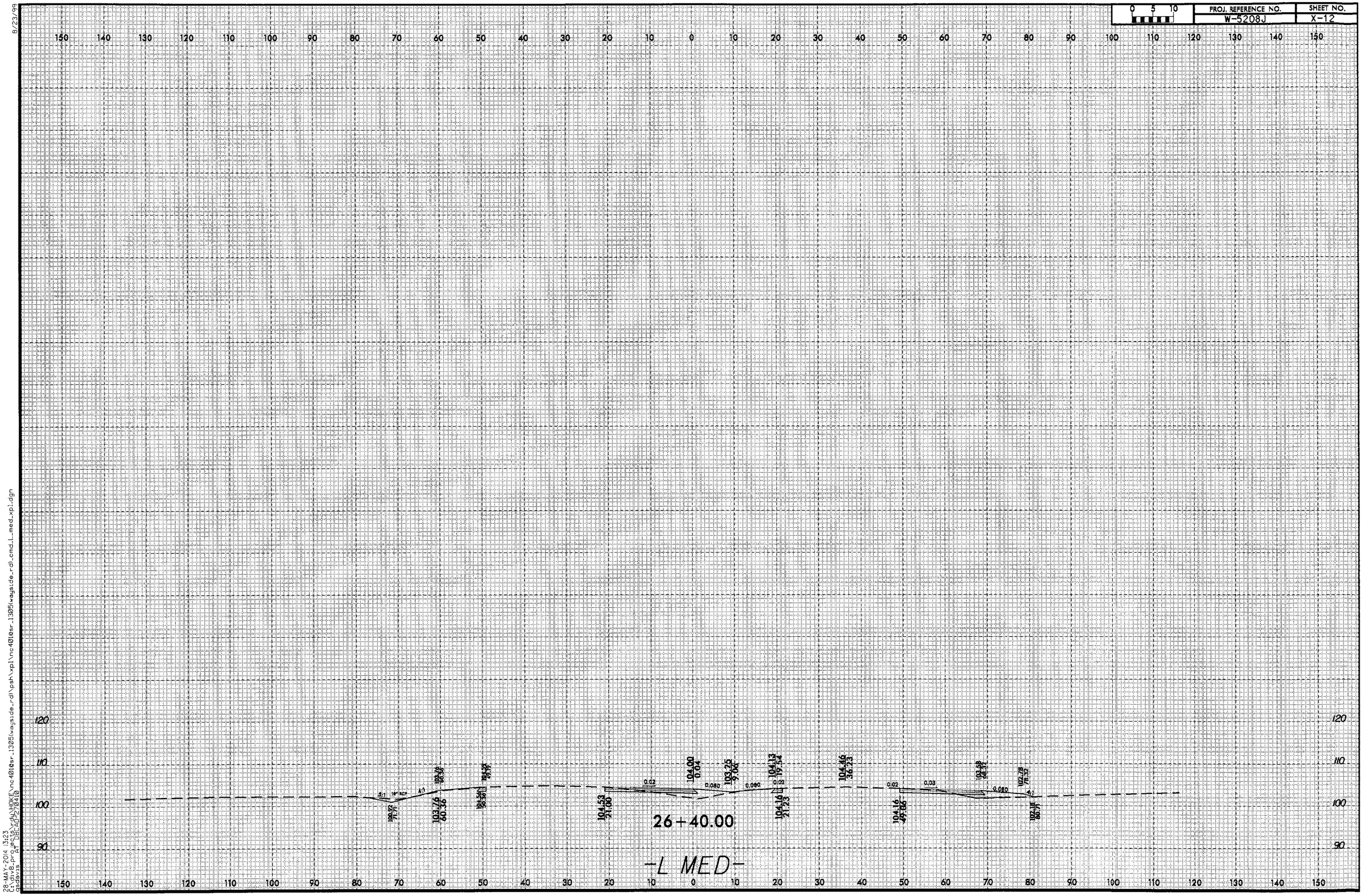

8/23/99

28-MAY-2014 13:23
C:\dvd8_projects\rdy\HOKE\nc4010sr_1305(wayside_rdl\psh\xpl\nc4010sr_1305(wayside_rdl_cmd_L_med_xpl.dgn
gsdavis AT DBCAD-270410

0 2.5 5	PROJ. REFERENCE NO.	SHEET NO.
	W-5208J	X-13

8/23/99

28-MAY-2014 13:23
C:\civil8.prg\use\dgn\HOKE\nc421asr_1305\wayside_rd\pshi\xpl\nc421asr_1305\wayside_rd\cmd_L_med_xpl.dgn
Geopak 08.00.00.04 (32)

27+40.00

103.07 49.52 — 103.38 34.85 — 102.68 3.87 — 101.66 8.29 — 102.61 19.65 — 102.92 36.15 — 102.49 51.78

103.07 49.63 — 103.07 21.18 — 102.64 21.16 — 102.56 49.12 — 102.34 53.64

0.02 | 0.080 | 0.080 | 0.02 | 0.01 | 0.03 | 0.080

27+20.00

103.16 52.16 — 103.36 49.47 — 103.68 34.84 — 102.97 3.09 — 101.99 8.62 — 102.91 19.62 — 103.23 36.23 — 102.73 55.09 — 102.42 58.92

103.36 49.77 — 103.37 21.14 — 102.94 21.22 — 102.88 49.13

0.02 | 0.080 | 0.080 | 0.02 | 0.01 | 0.03 | 0.080

27+00.00

103.40 52.62 — 103.63 49.42 — 103.98 34.82 — 103.26 2.31 — 102.33 8.91 — 103.22 19.60 — 103.54 36.30 — 102.94 58.40 — 102.14 68.40 — 101.03 72.85

103.62 49.92 — 103.68 21.09 — 103.25 21.33 — 103.22 49.11

0.02 | 0.080 | 0.080 | 0.02 | 0.01 | 0.03 | 0.080 | 4:1

26+80.00

103.19 58.78 — 103.92 49.35 — 104.28 34.81 — 103.55 1.53 — 102.66 9.14 — 103.53 19.58 — 103.85 36.36 — 103.16 61.71 — 102.36 71.71 — 101.37 75.70

103.92 50.07 — 103.98 21.05 — 103.56 21.38 — 103.54 49.09

0.02 | 0.080 | 0.080 | 0.02 | 0.01 | 0.03 | 0.080 | 4:1

26+60.00

103.55 58.78 — 104.26 49.27 — 104.58 34.80 — 103.77 0.74 — 102.95 9.07 — 103.83 19.56 — 104.15 36.30 — 103.37 65.02 — 102.57 75.02

4:1 | 4:1 | 104.24 50.21 — 104.25 21.02 — 103.86 21.30 — 103.85 49.08

0.02 | 0.080 | 0.080 | 0.02 | 0.02 | 0.03 | 0.080 | 4:1

-L MED-

0 2.5 5	PROJ. REFERENCE NO.	SHEET NO.
	W-5208J	X-14

8/23/99

28-MAY-2014 13:23
C:\div8_projects\W-5208J\vnc4018sr_1305\wayside_rd\psh\xpl\vnc4018sr_1305\wayside_rd\cmd_L_med_xpl.dgn
ssbates
Default
0 0 0

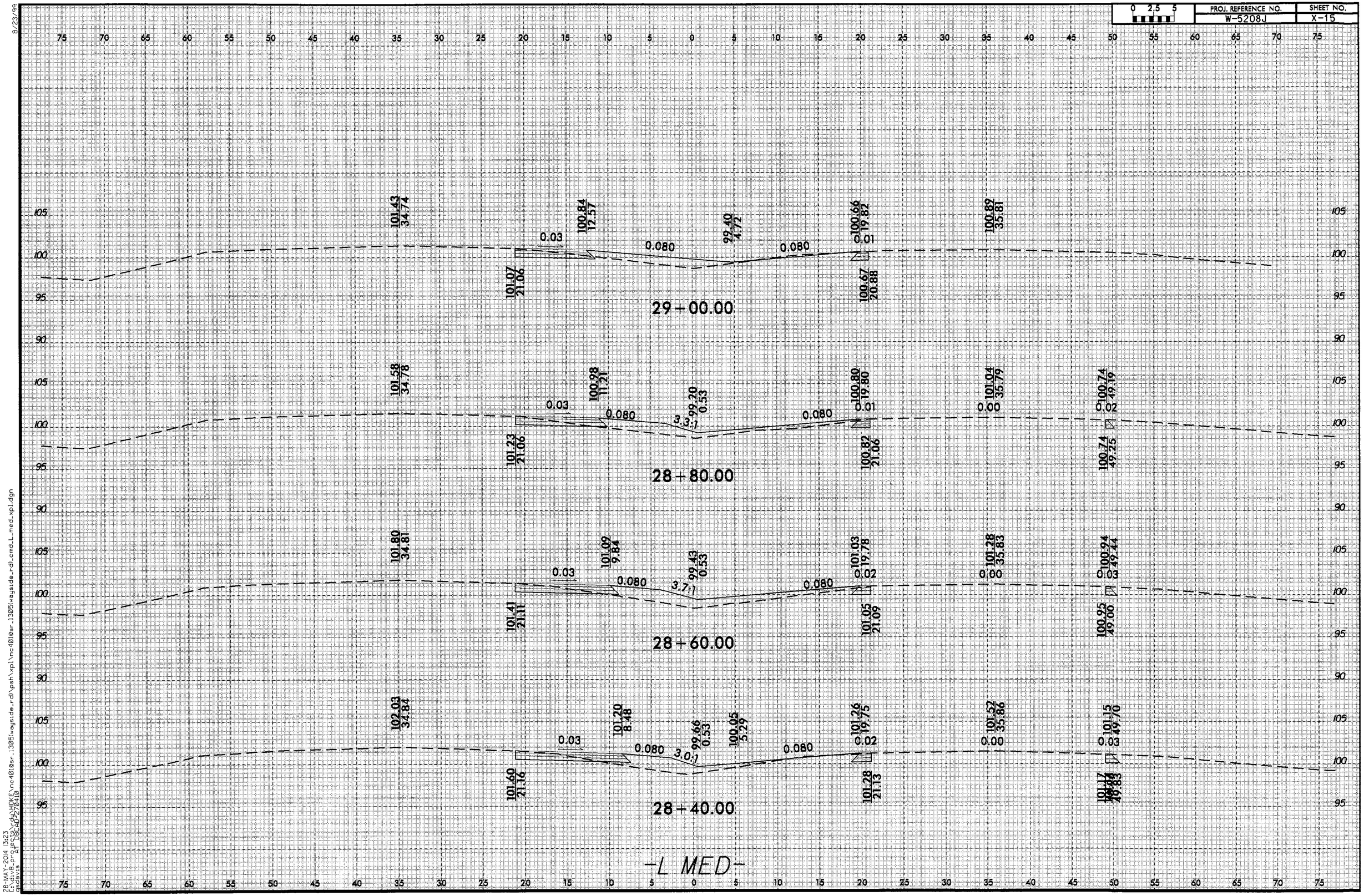

8/23/99

28-MAY-2014 13:23
C:\div8_projects\rdy\HOKE\nc4010sr_1305(wayside_rd)\psh\xpl\nc4010sr_1305(wayside_rd)_cmd_L_med_xpl.dgn
gsdavis AT DBCAD-270410

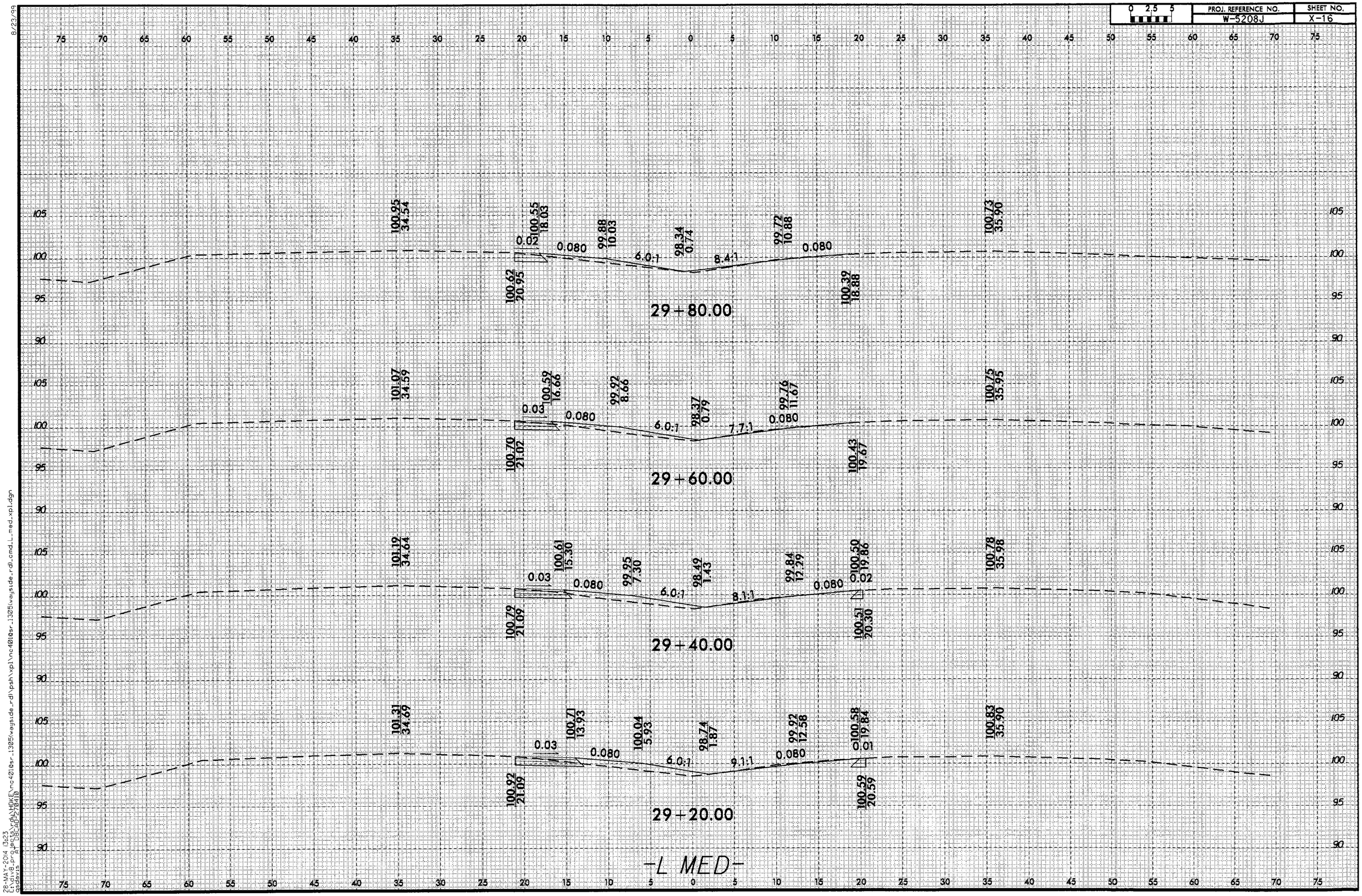

8/23/99

28-MAY-2014 13:23
C:\div8_projects\rdy\HOKE\nc4010sr_1305\wayside_rdl\psh\xpl\nc4010sr_1305\wayside_rdl_cmd_L_med_xpl.dgn
gsdavis AT DBCAD-270410

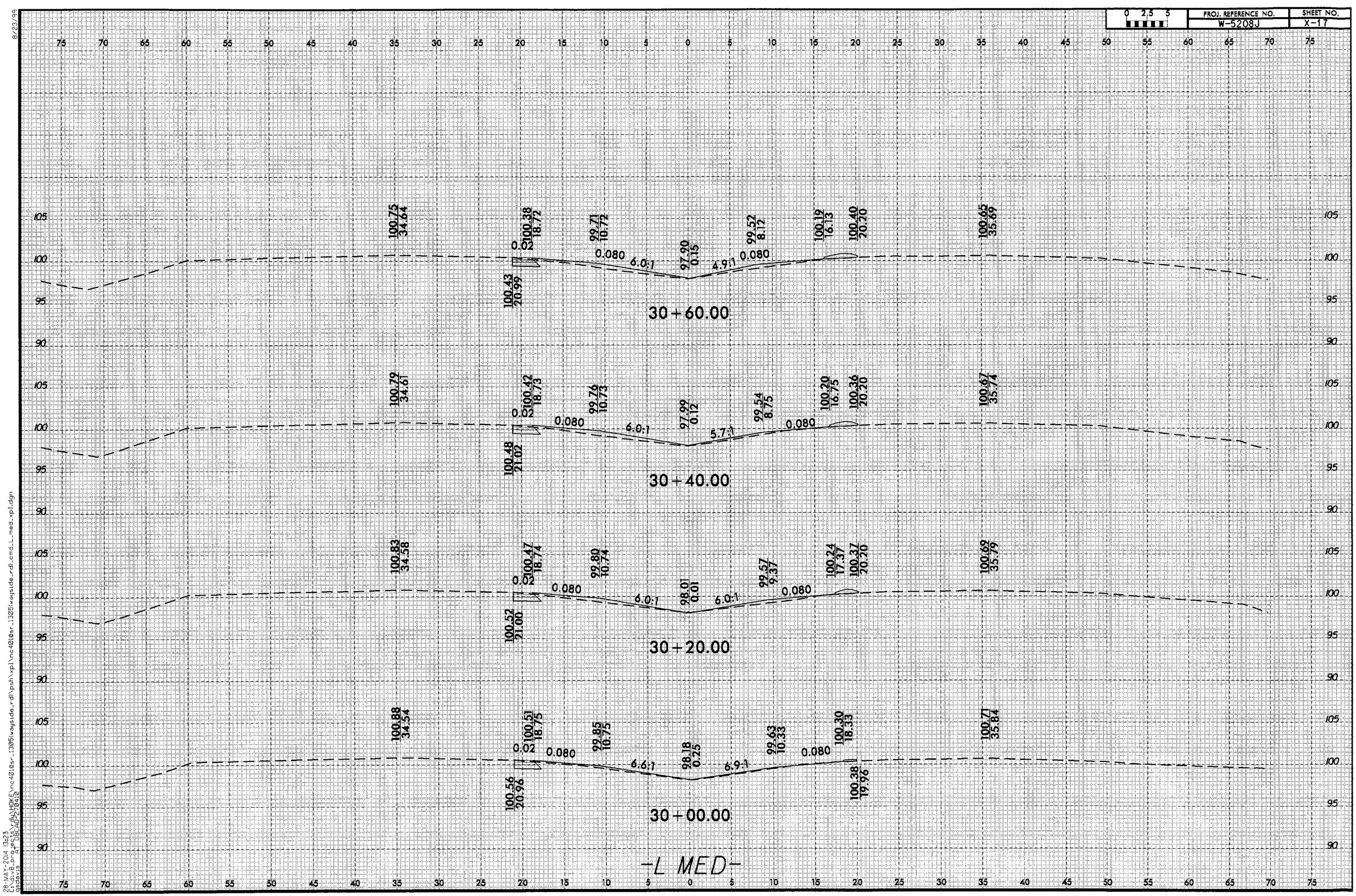

8/23/99

28-MAY-2014 13:23
C:\divB_projects\rdy\HOKE\nc4010sr_1305(wayside_rd)\psh\xpl\nc4010sr_1305(wayside_rd)_cmd_L_med_xpl.dgn
gsdavis AT DBCAD-270410

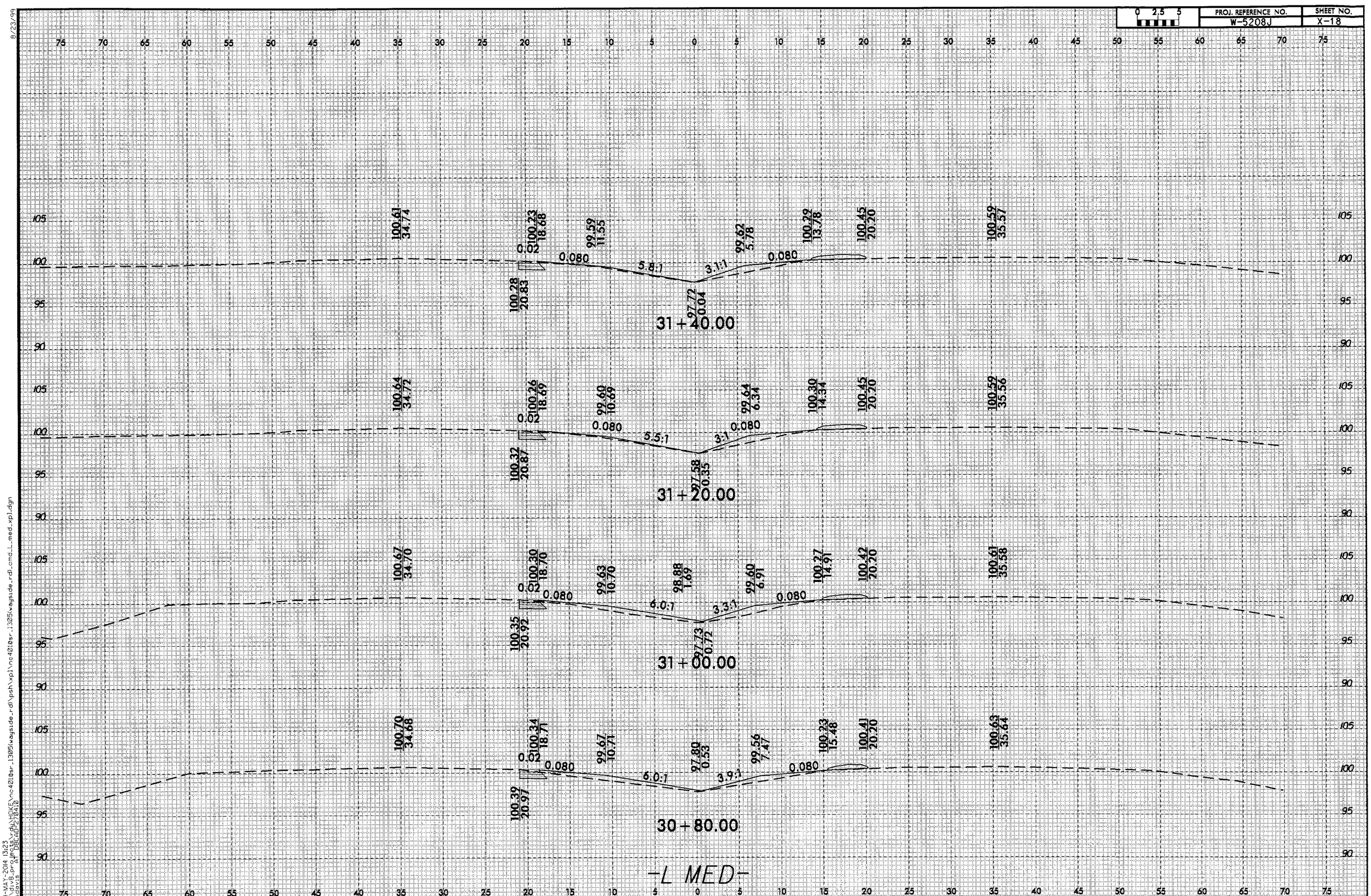

8/23/99

28-MAY-2014 13:23
C:\div8_projects\rdy\HOKE\nc4010sr_1305\wayside_rd\psh\xpl\nc4010sr_1305\wayside_rd\cmd_L_med_xpl.dgn
gsdavis AT DBCAD-270410

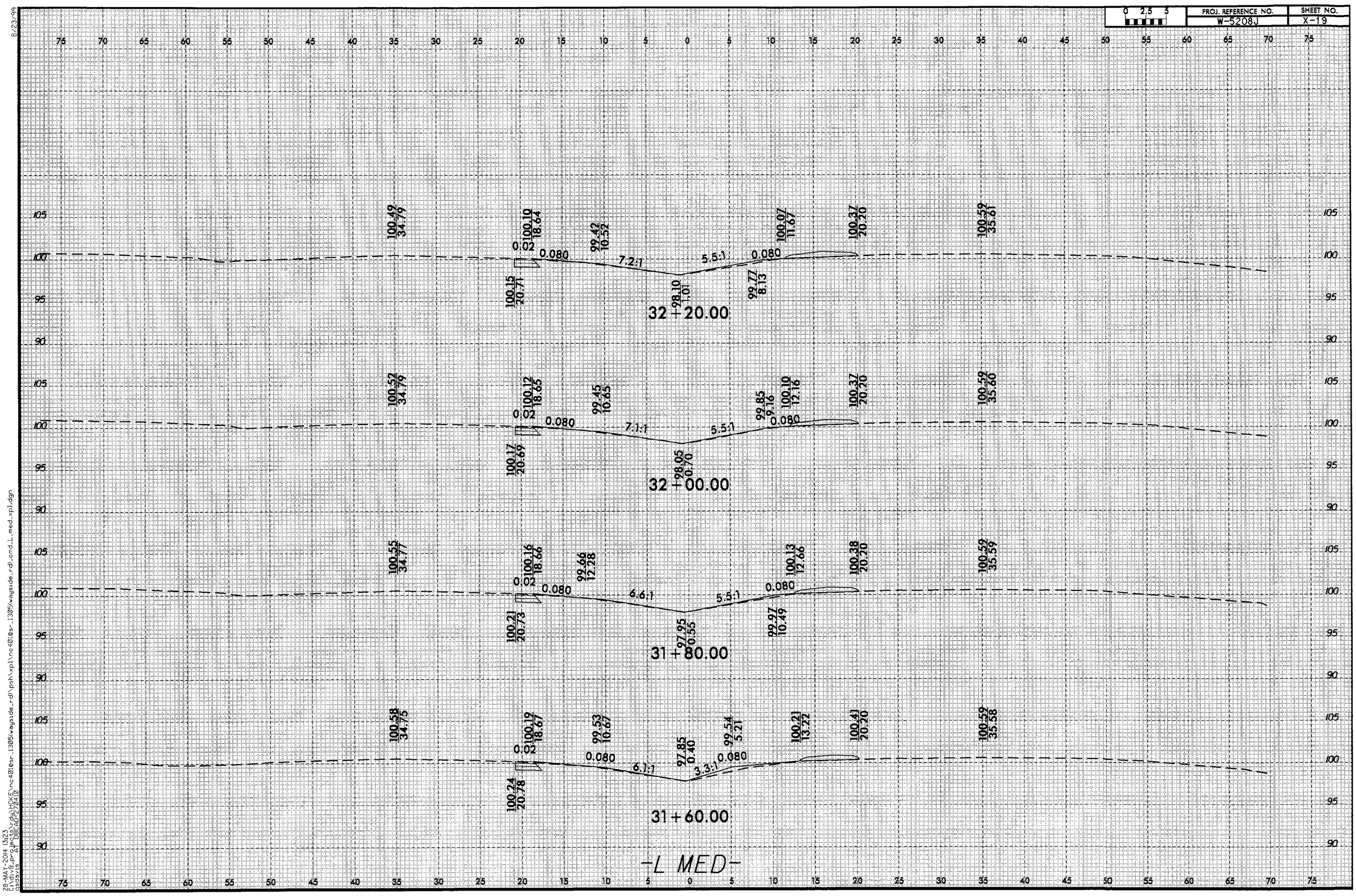

8/23/99

28-MAY-2014 13:23
C:\div8_projects\rdy\HOKE\nc401@sr_1305\wayside_rd\psh\xpl\nc401@sr_1305\wayside_rd\cmd_L_med_xpl.dgn
asdavis AT D8CAD-270410

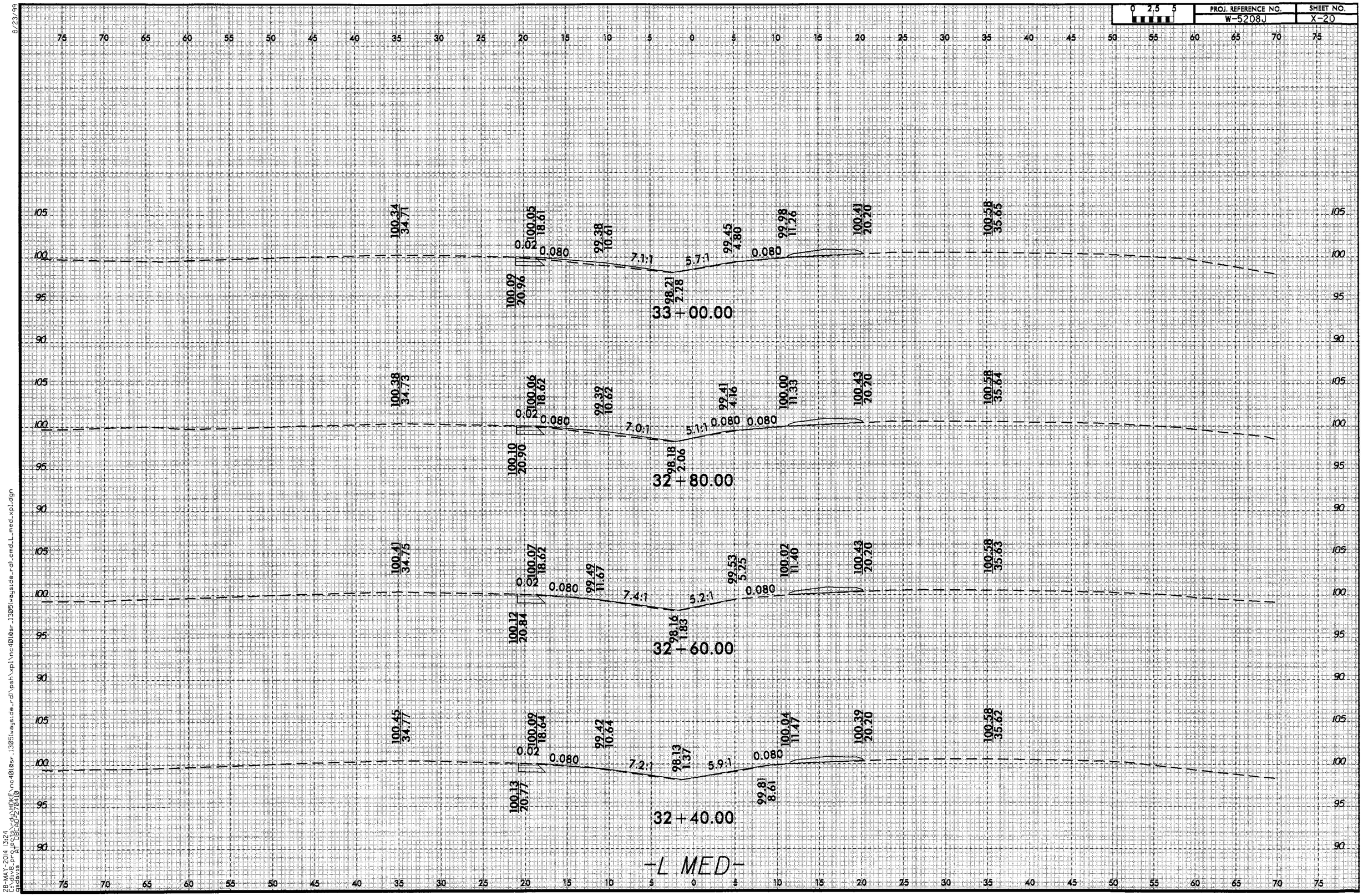

8/23/99

28-MAY-2014 13:24
C:\div8_projects\rdy\HOKE\nc4010sr_1305(wayside_rd)\psh\xpl\nc4010sr_1305(wayside_rd)_cmd_L_med_xpl.dgn
gsdavis AT DBCAD-270410

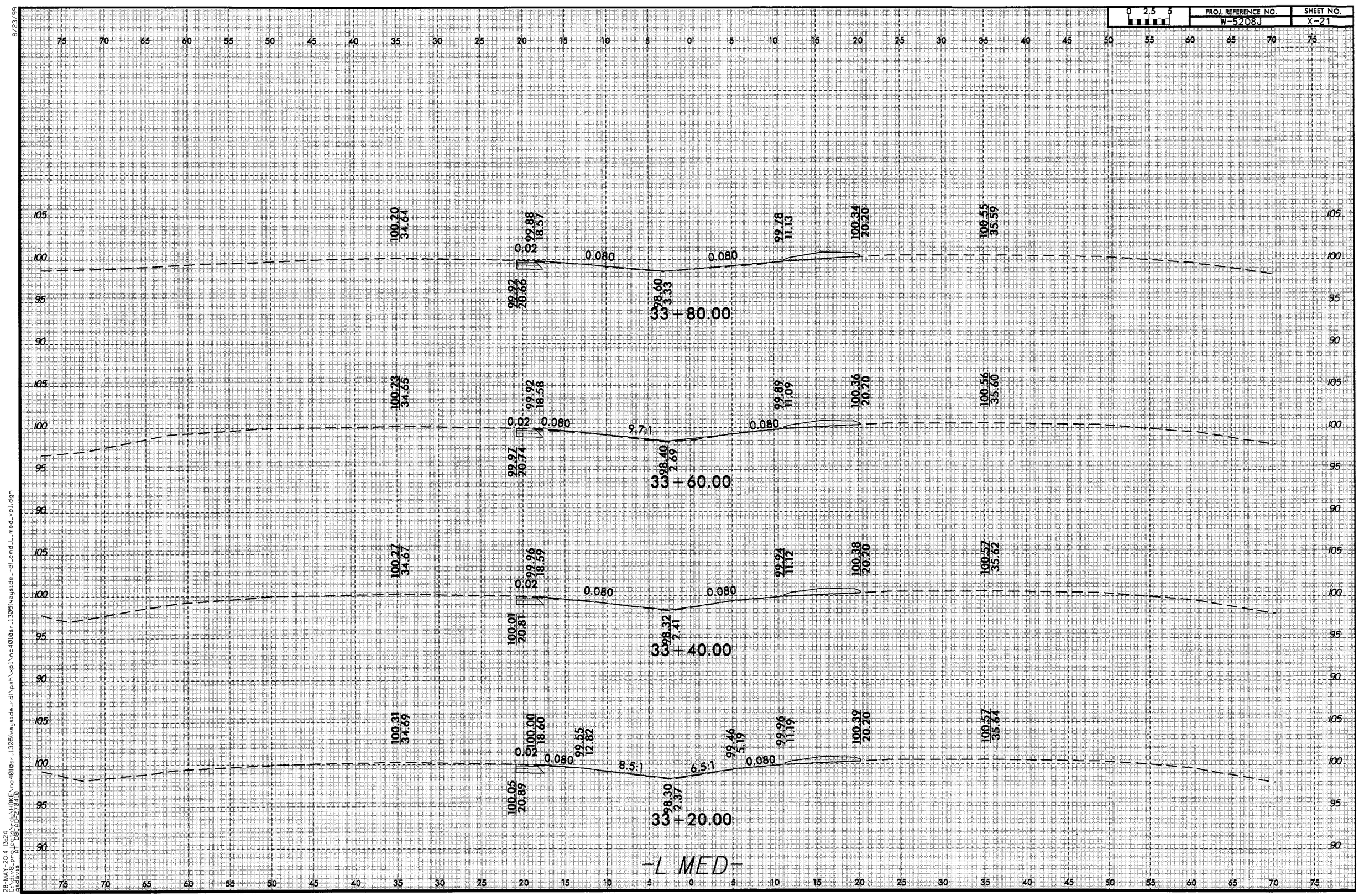

8/23/99

28-MAY-2014 13:24
C:\div8_projects\rdy\HOKE\nc401@sr_1305(wayside_rd)\psh\xpl\nc401@sr_1305(wayside_rd)_cmd_L_med_xpl.dgn
gsdavis AT DBCAD-270410

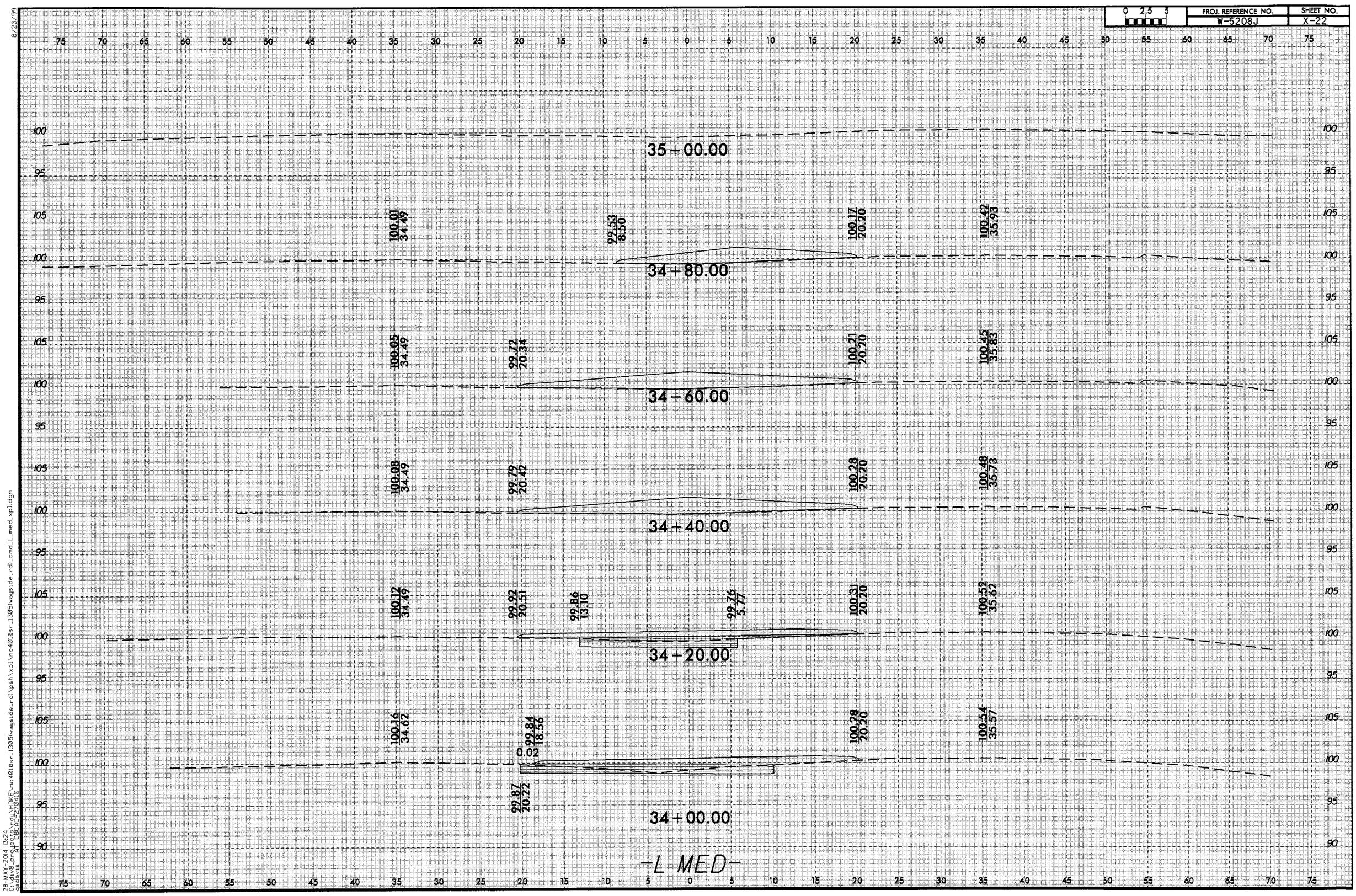

8/23/99

28-MAY-2014 13:24
C:\div8_projects\rdy\HOKE\nc401@sr_1305(wayside_rd)\psh\xpl\nc401@sr_1305(wayside_rd)_cmd_L_med_xpl.dgn
asdavis AT DBCAD-270410

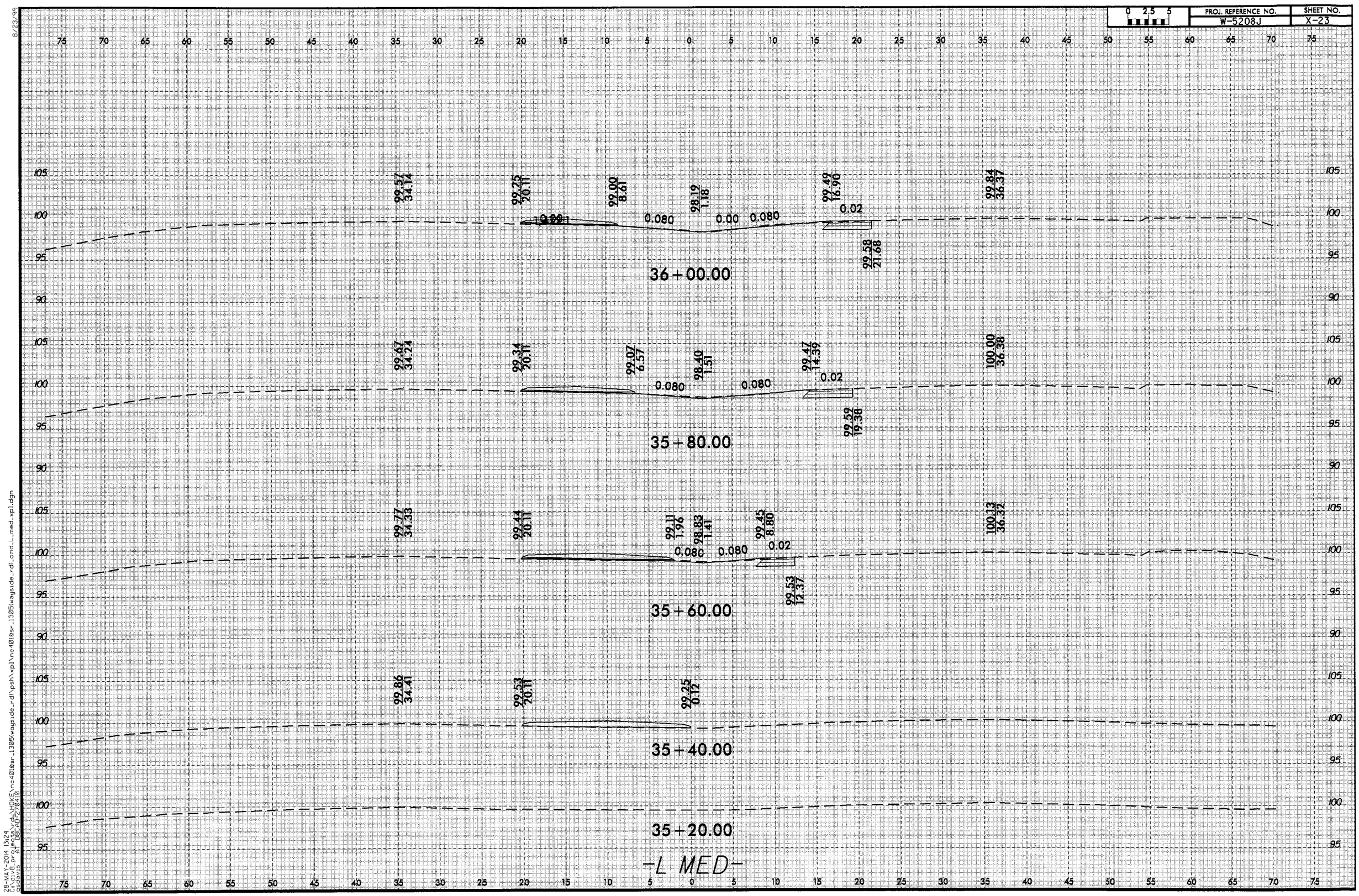

8/23/99

28-MAY-2014 13:24
C:\div8_projects\rdy\HOKE\nc4010sr_1305(wayside_rd)\psh\xpl\nc4010sr_1305(wayside_rd)_cmd_L_med_xpl.dgn
asdavis AT DBCAD-270410

0 2,5 5	PROJ. REFERENCE NO.	SHEET NO.
	W-5208J	X-24

8/23/99

75 70 65 60 55 50 45 40 35 30 25 20 15 10 5 0 5 10 15 20 25 30 35 40 45 50 55 60 65 70 75

100 95

98.95 34.14 | 98.60 20.11 | 98.29 9.68 | 97.19 3.55 | 99.00 36.39

0.080 0.080

37+00.00

99.09 34.10 | 98.77 20.11 | 98.44 9.59 | 97.37 3.19 | 98.82 20.61 | 99.17 36.34

0.02

98.84 21.51

100 95 90

36+80.00

105 100 95

99.23 34.04 | 98.92 20.11 | 98.61 9.56 | 97.60 2.59 | 99.03 19.69 | 99.34 36.33

0.02

99.06 21.47

36+60.00

105 100 95 90

99.37 33.98 | 99.07 20.11 | 98.79 9.54 | 97.83 1.99 | 99.23 18.76 | 99.50 36.34

0.02

99.27 21.44

36+40.00

105 100 95 90

99.48 34.04 | 99.18 20.11 | 98.91 9.34 | 98.00 1.52 | 99.36 17.83 | 99.67 36.36

0.02

99.42 21.56

36+20.00

-L MED-

75 70 65 60 55 50 45 40 35 30 25 20 15 10 5 0 5 10 15 20 25 30 35 40 45 50 55 60 65 70 75

28-MAY-2014 13:24
C:\div8_projects\DVE\nc401l8sr_1305\waysides_rdl\psh\xpl\nc401l8sr_1305\waysides_rdl_cmd_L_med_xpl.dgn
$USER
$DGNSETUP
$DGNDEVICE
$DGNPENTABLE
$DGNPRINTER
$DGNPAPERSIZE
$DGNPAPERUNITS
$DGNPLOTSCALE
$DGNPLOTORIGIN
$DGNPLOTOFFSET
$DGNPLOTROTATE
$DGNPLOTMARGINS
$DGNPLOTAREA
$DGNPLOTSCALETYPE
$DGNPLOTSCALEVALUE
$DGNPLOTFLAGS
$DGNPLOTSHEETSIZE
$DGNPLOTSHEETUNITS
$DGNPLOTSHEETOFFSET
$DGNPLOTSHEETMARGINS
$DGNPLOTSHEETAREA
$DGNPLOTSHEETSCALE
$DGNPLOTSHEETSCALETYPE
$DGNPLOTSHEETSCALEVALUE
$DGNPLOTSHEETFLAGS

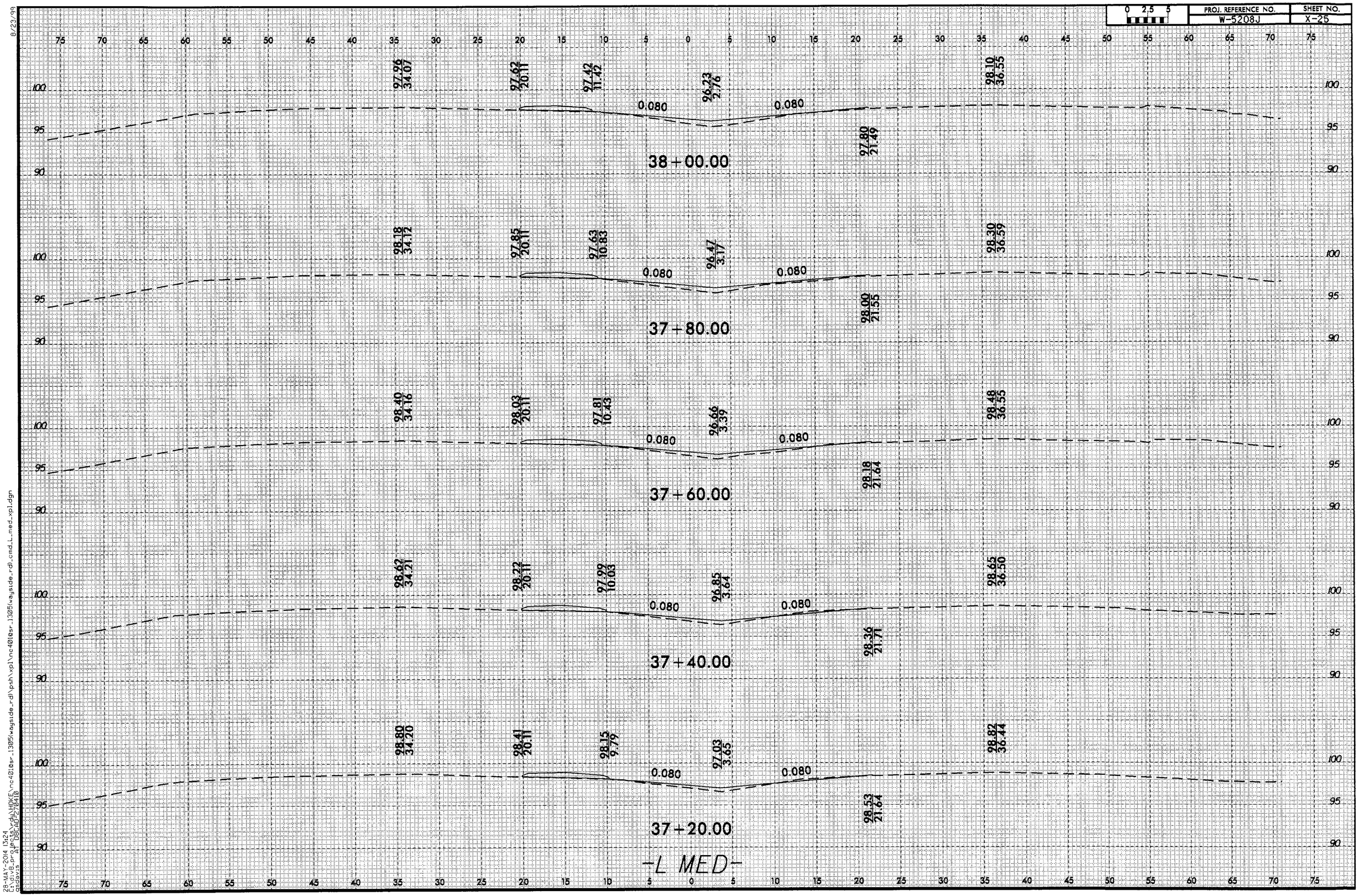

8/23/99

28-MAY-2014 13:24
C:\div8_projects\rdy\HOKE\nc401@sr_1305(wayside_rd)\psh\xpl\nc401@sr_1305(wayside_rd)_cmd_L_med_xpl.dgn
gsdavis AT DBCAD-270410

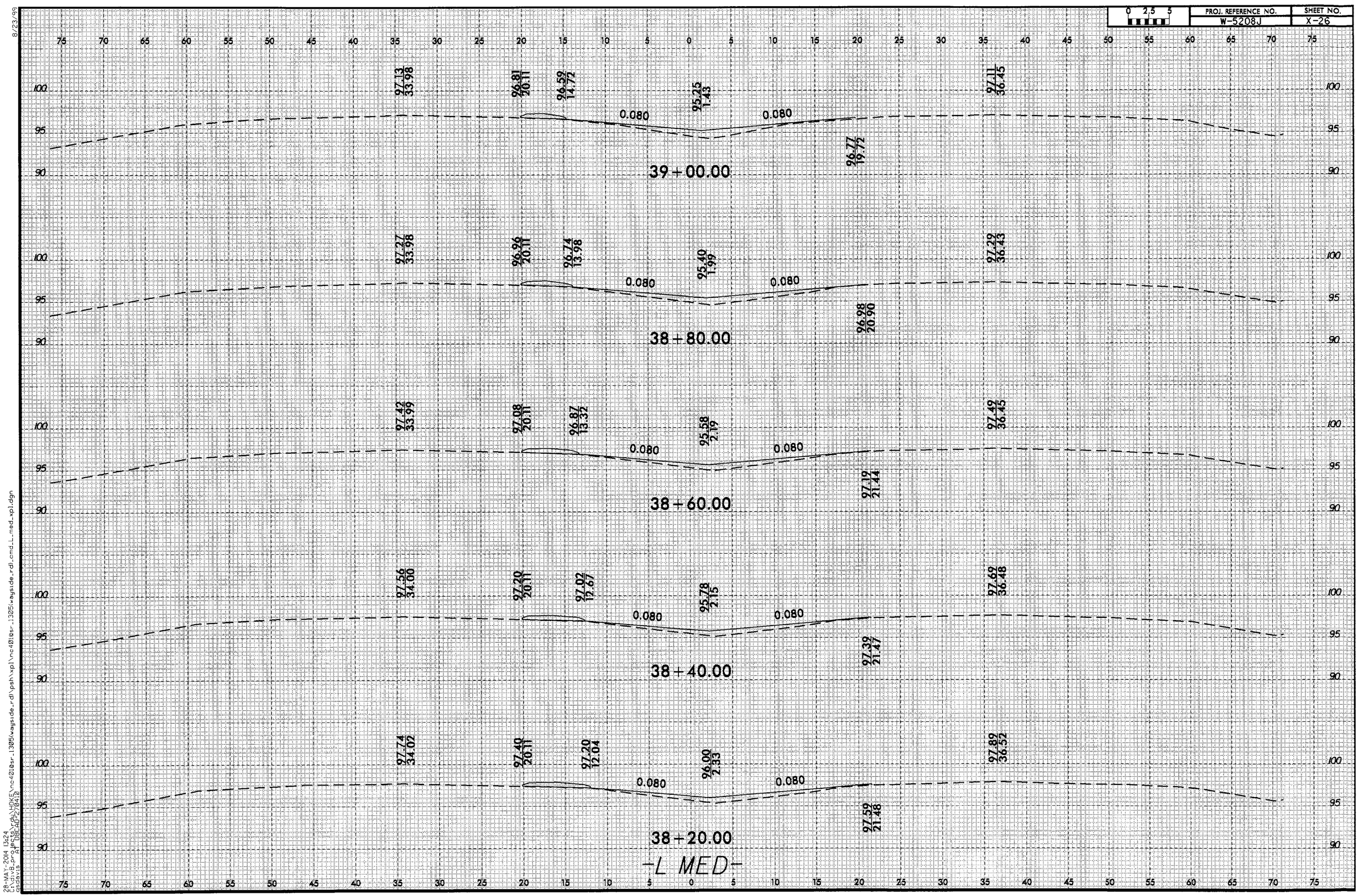

8/23/99

28-MAY-2014 13:24
C:\divB_projects\rdu\HOKE\nc401@sr_1305(wayside_rd)\psh\xpl\nc401@sr_1305(wayside_rd).cmd_L_med_xpl.dgn
gsdavis AT DBCAD-270410

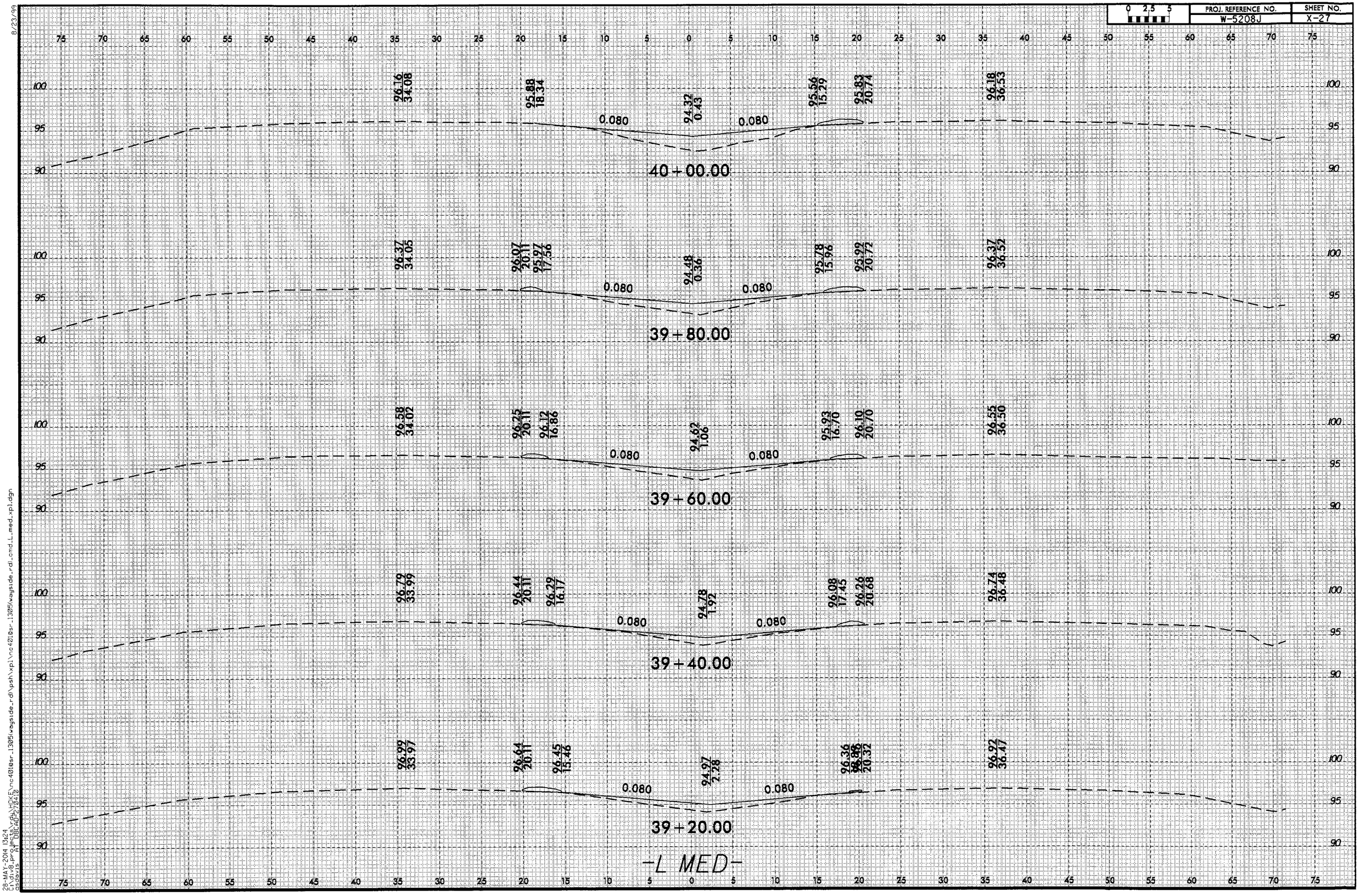

8/23/99

28-MAY-2014 13:24
C:\div8_projects\rdy\HOKE\nc4010sr_1305\wayside_rd\psh\xpl\nc4010sr_1305\wayside_rd_cmd_L_med_xpl.dgn
asdavis AT D8CAD-270410

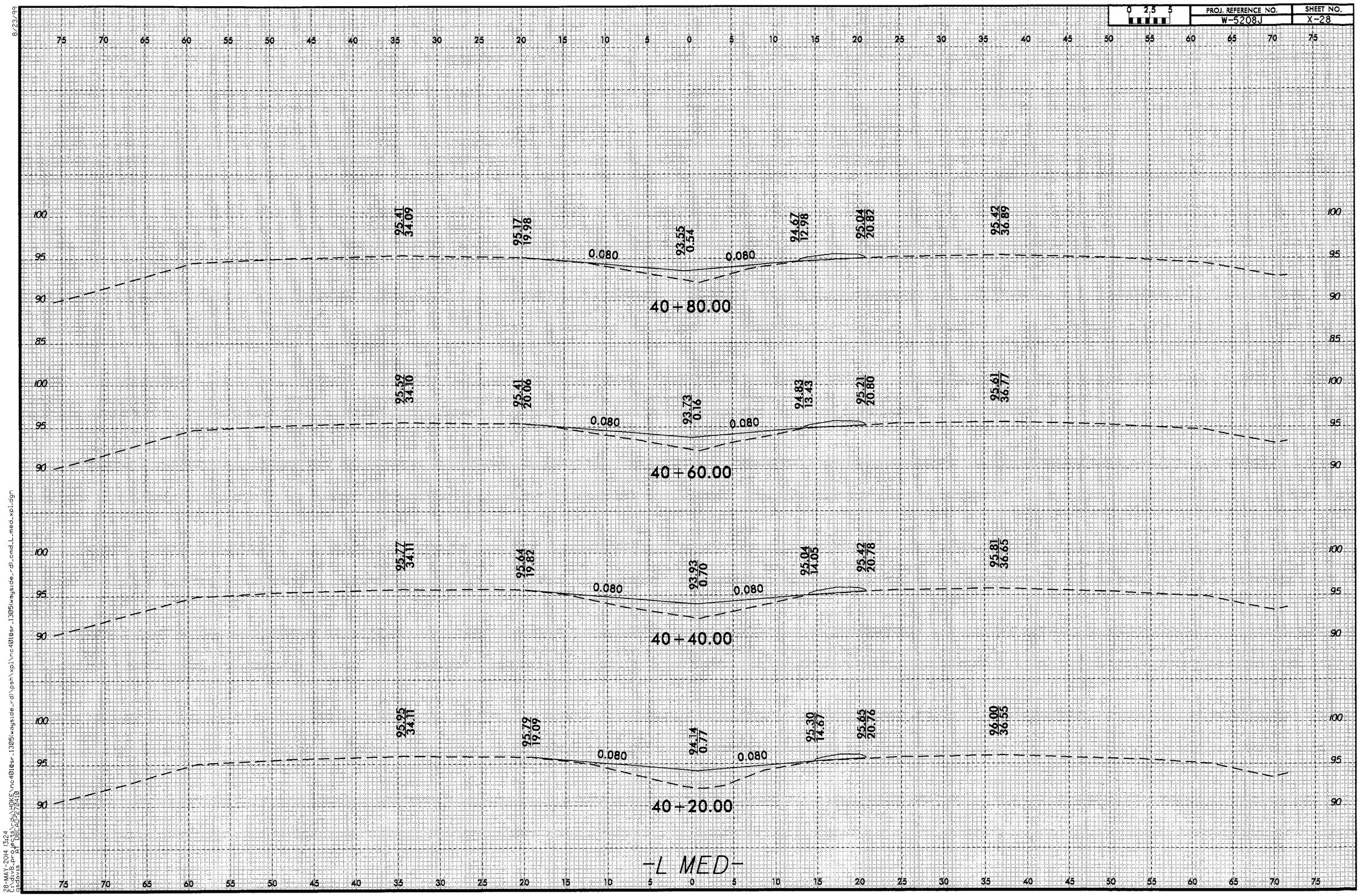

8/23/99

28-MAY-2014 13:24
C:\div8_projects\rdy\HOKE\nc401@sr_1305\wayside_rd\psh\xpl\nc401@sr_1305\wayside_rd\cmd_L_med_xpl.dgn
qsdavis AT DBCAD-270410

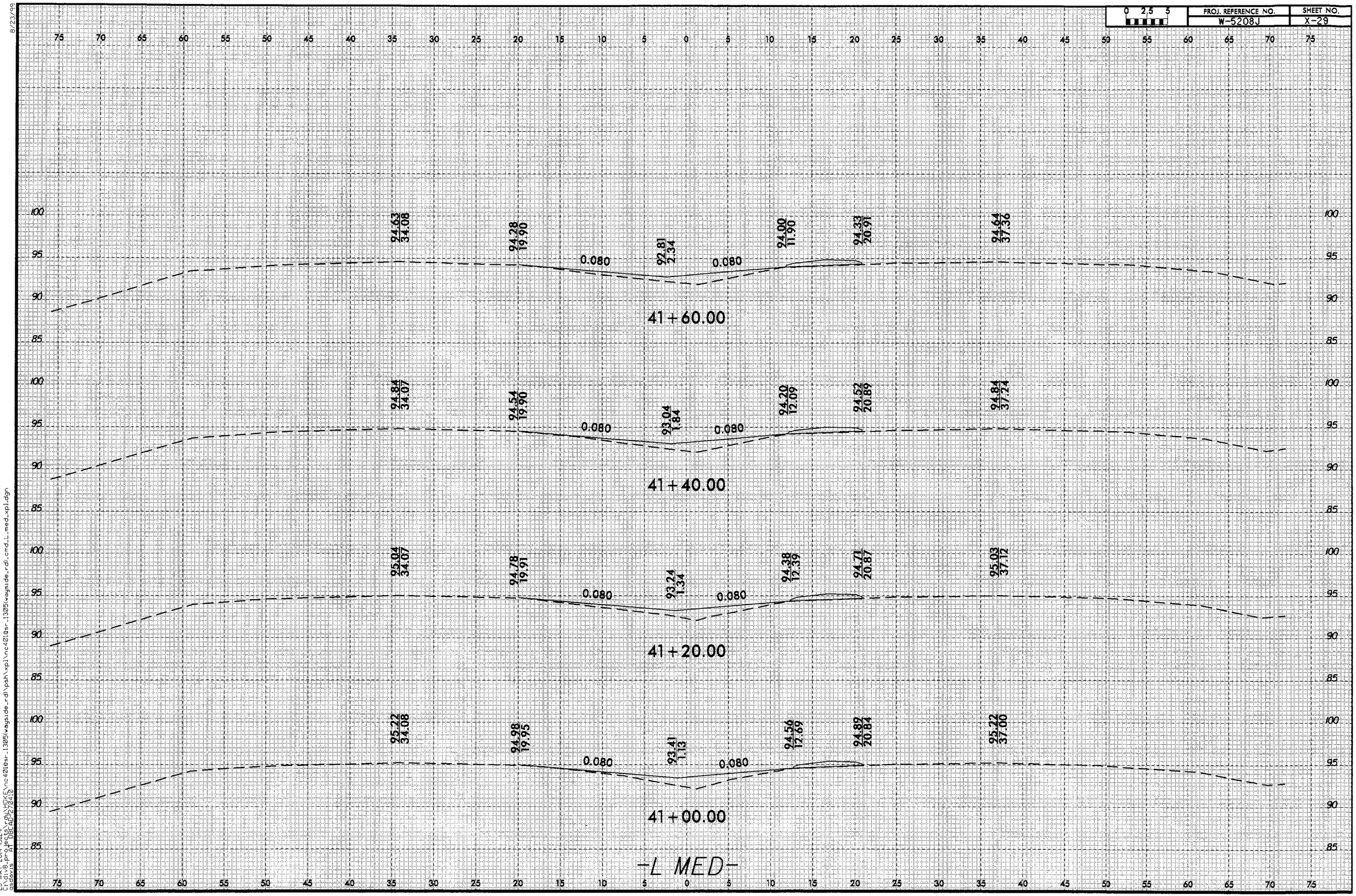

8/23/99

28-MAY-2014 13:24
C:\div8_projects\rdy\HOKE\nc4010sr_1305(wayside_rd)\psh\xpl\nc4010sr_1305(wayside_rd)_cmd_L_med_xpl.dgn
gsdavis AT D8CAD-270410

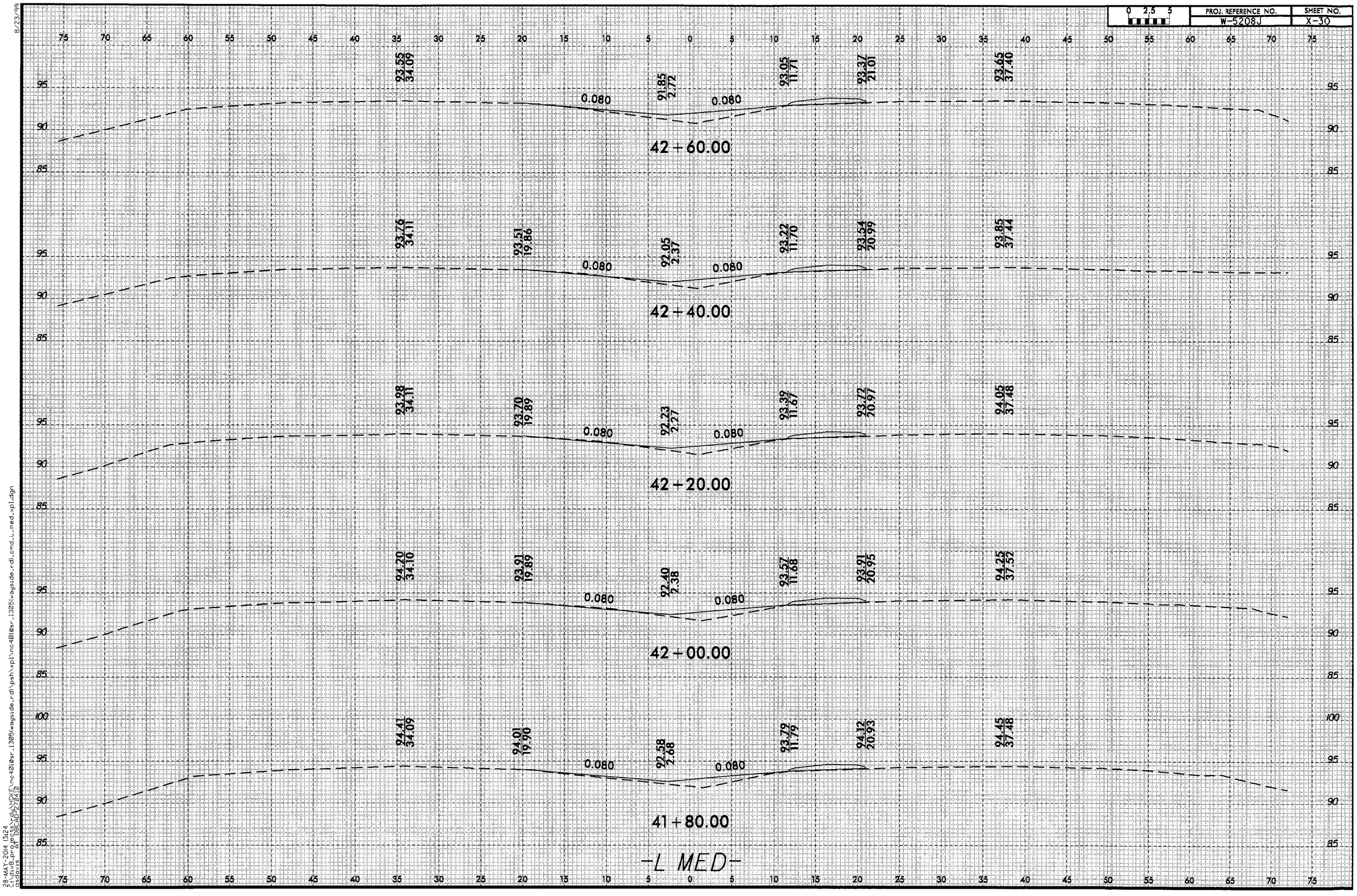

8/23/99

28-MAY-2014 13:24
C:\div8_projects\rdy\HOKE\nc4010sr_1305(wayside_rd)\psh\xpl\nc4010sr_1305(wayside_rd)_cmd_L_med_xpl.dgn
gsdavis AT DBCAD-270410

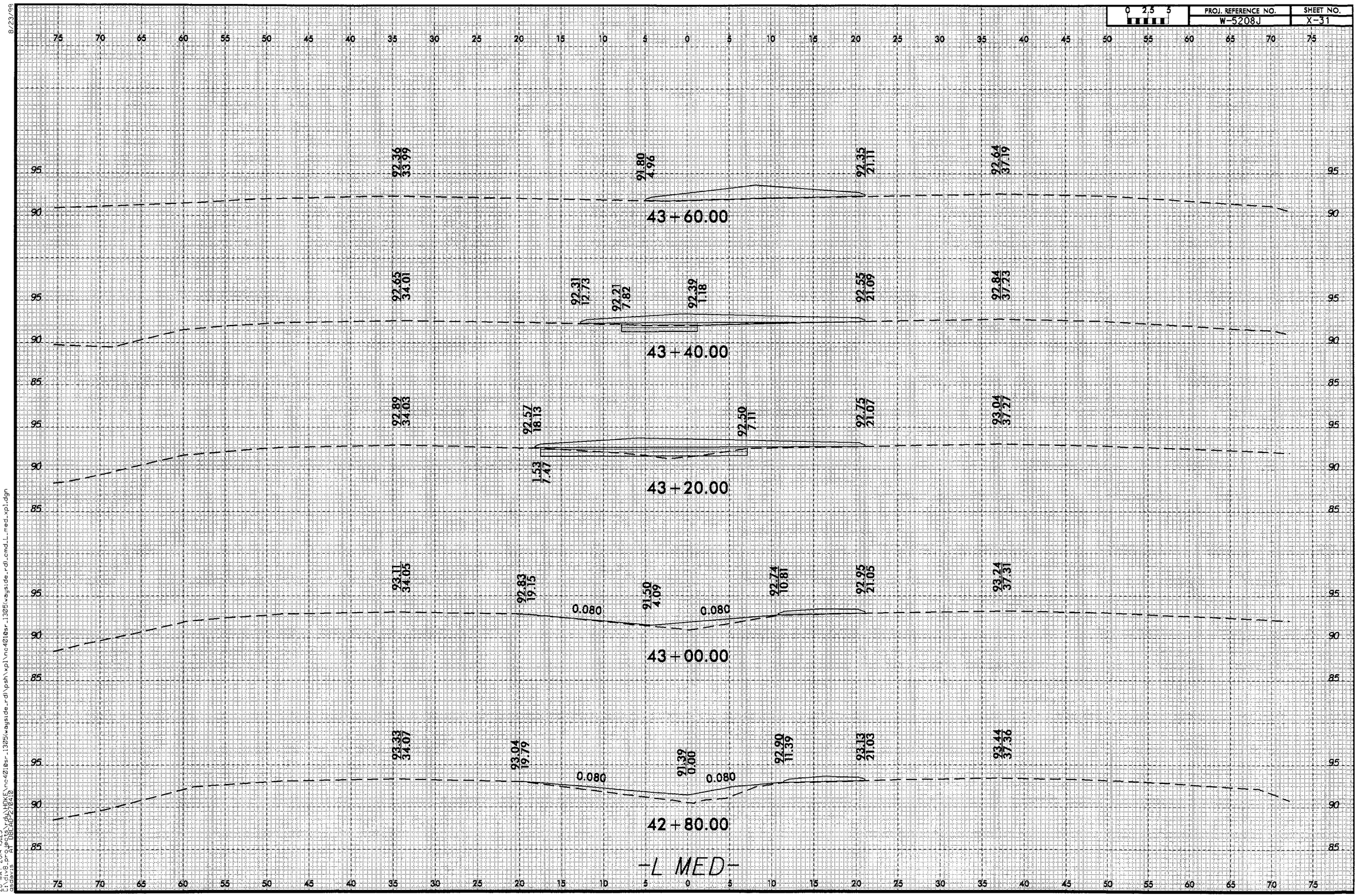

8/23/99

28-MAY-2014 13:25
C:\div8_projects\rdy\HOKE\nc4010sr_1305\wayside_rd\psh\xpl\nc4010sr_1305\wayside_rd\cmd_L_med_xpl.dgn
asdavis AT DBCAD-270410

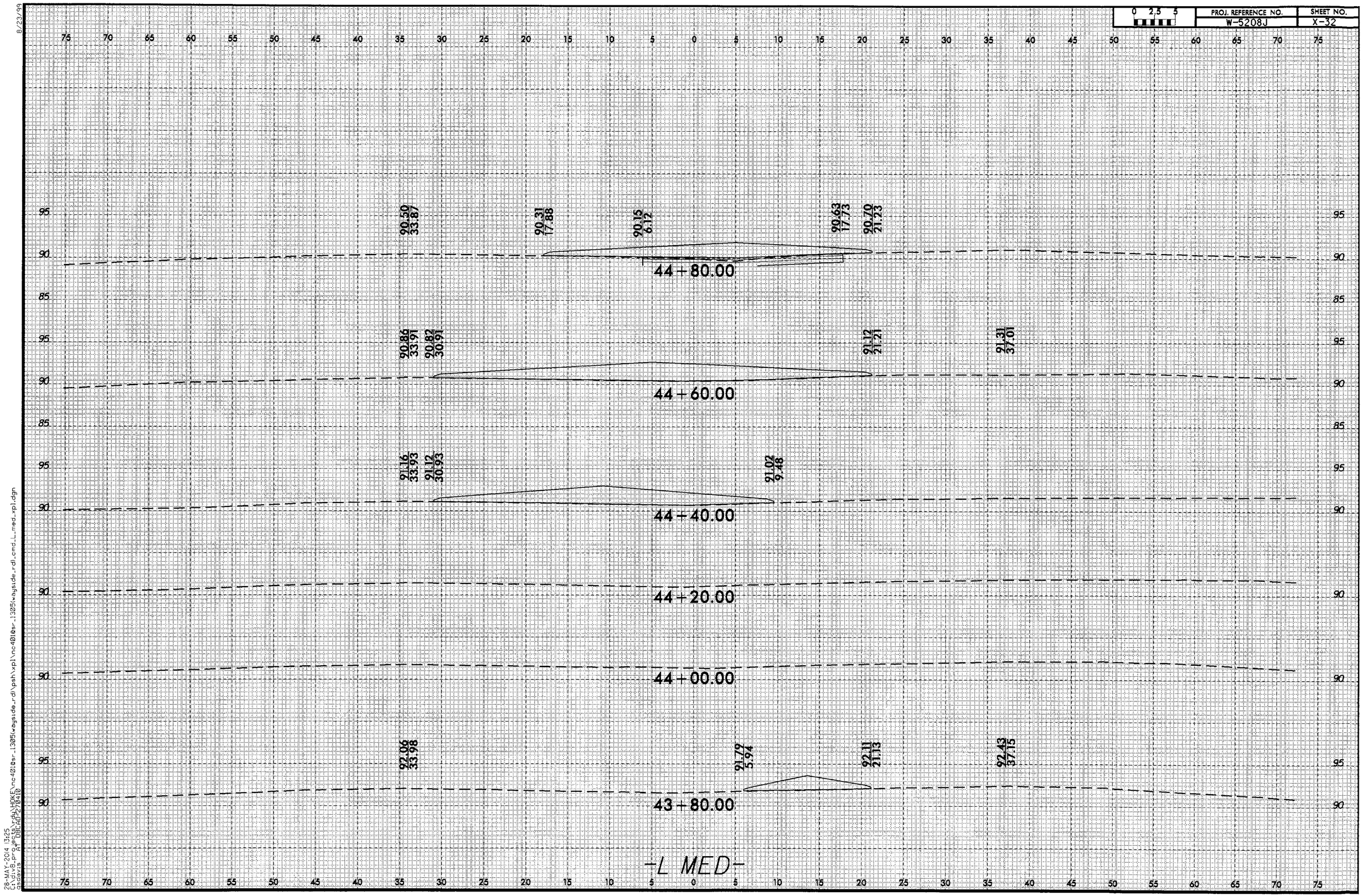

8/23/99

28-MAY-2014 13:25
C:\div8_projects\rdy\HOKE\nc4010sr_1305(wayside_rd)\psh\xpl\nc4010sr_1305(wayside_rd)_cmd_L_med_xpl.dgn
gsdavis AT DBCAD-270410

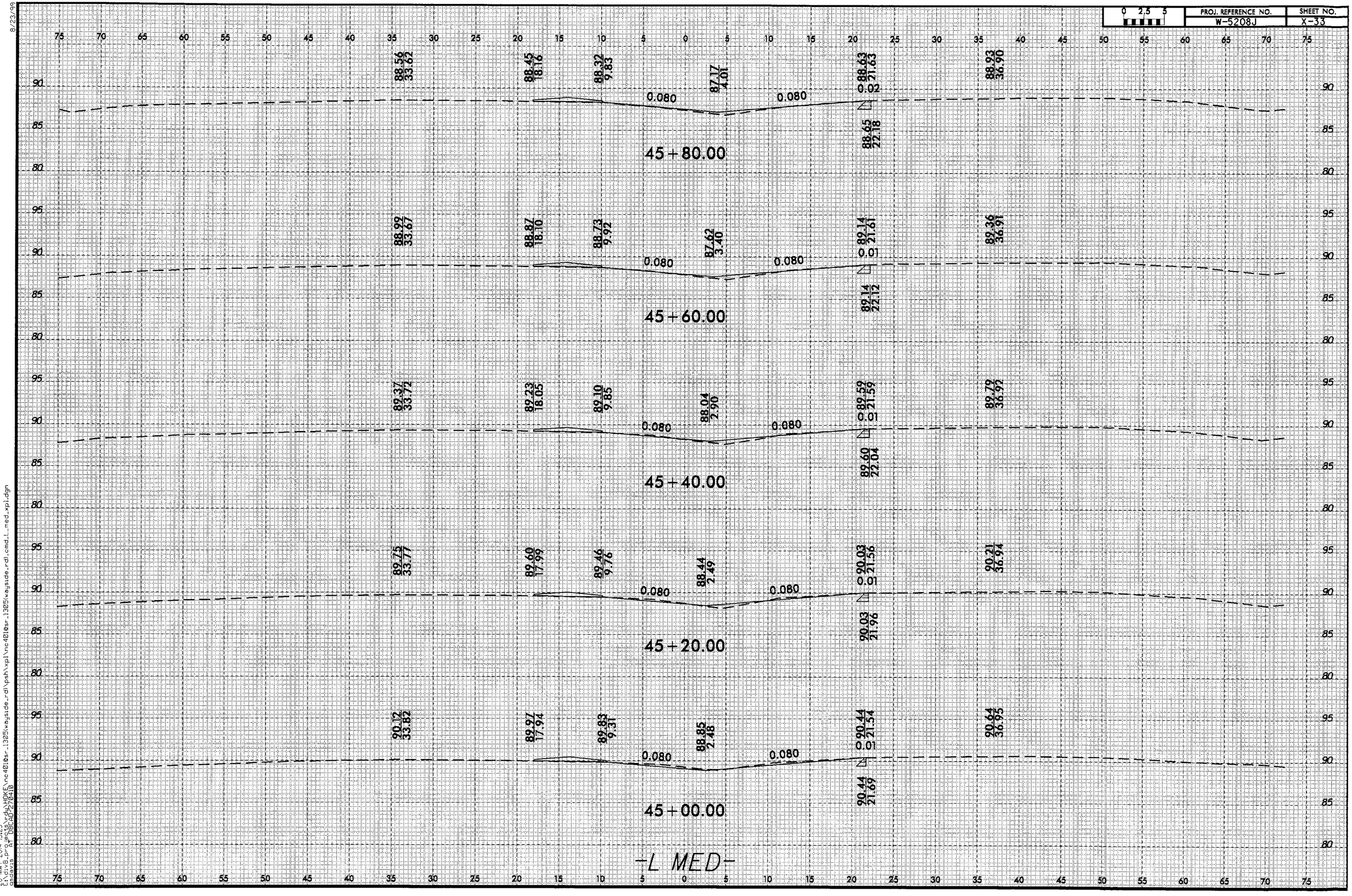

8/23/99

28-MAY-2014 13:25
C:\div8_projects\rdy\HOKE\nc401@sr_1305(wayside_rd)\psh\xpl\nc401@sr_1305(wayside_rd)_cmd_L_med_xpl.dgn
asdavis AT DBCAD-270410

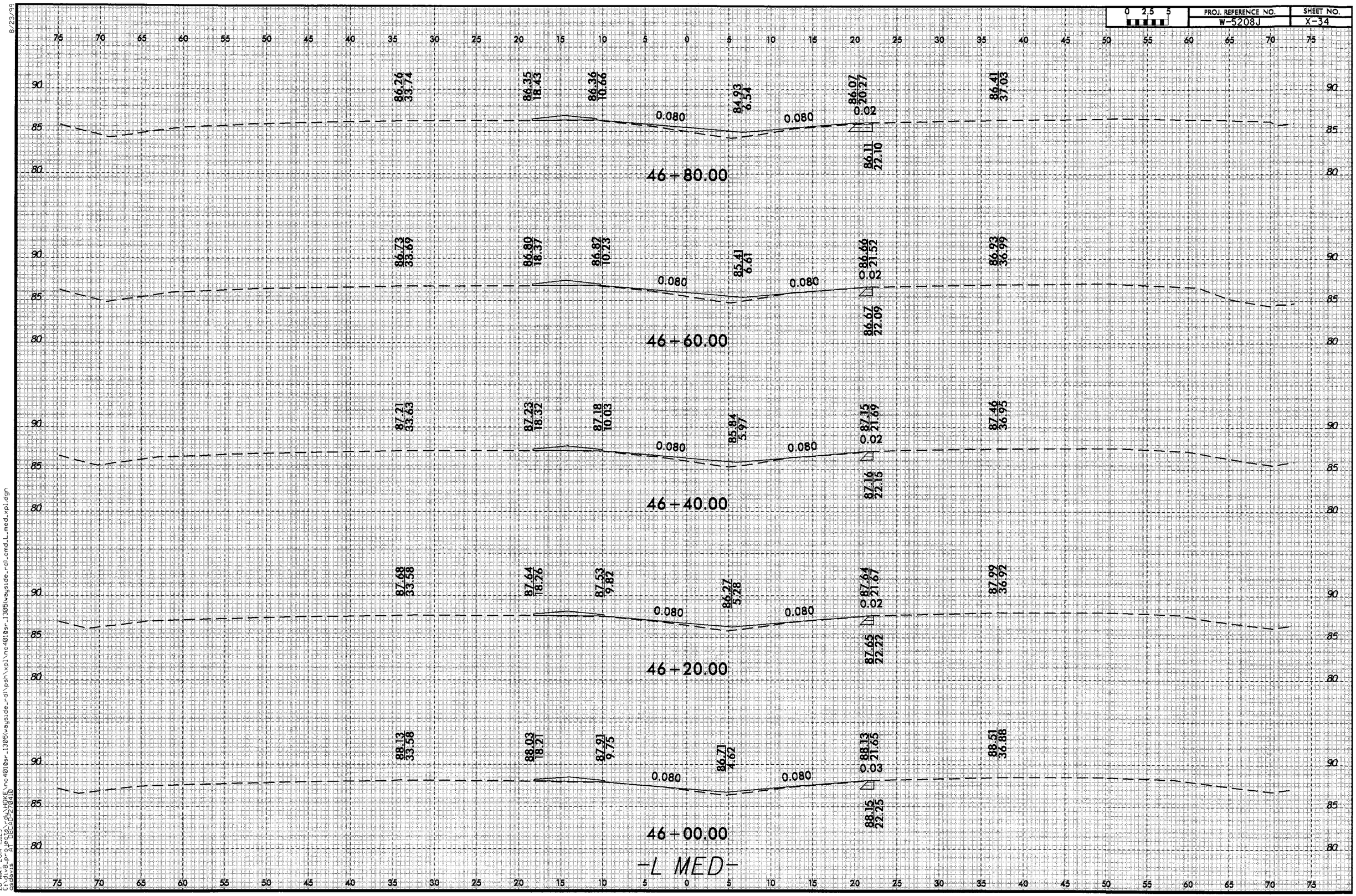

8/23/99

28-MAY-2014 13:25
C:\div8_projects\rdy\HOKE\nc4010sr_1305\wayside_rdl\psh\xpl\nc4010sr_1305\wayside_rdl_cmd_L_med_xpl.dgn
gsdavis AT DBCAD-270410

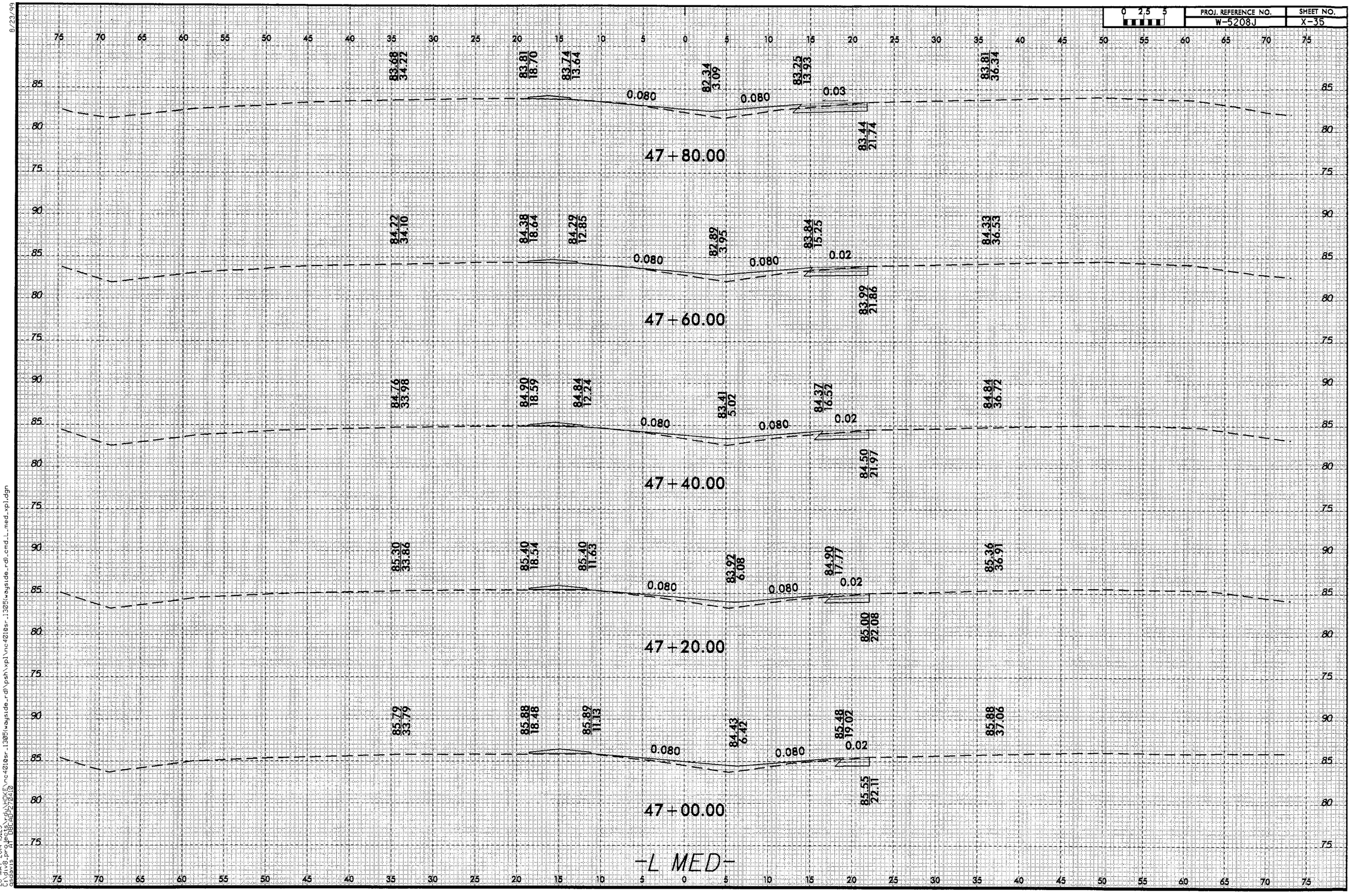

8/23/99

28-MAY-2014 13:25
C:\div8_projects\rdy\HOKE\nc4010sr_1305(wayside_rd)\psh\xpl\nc4010sr_1305(wayside_rd)_cmd_L_med_xpl.dgn
asdavis AT DBCAD=270410

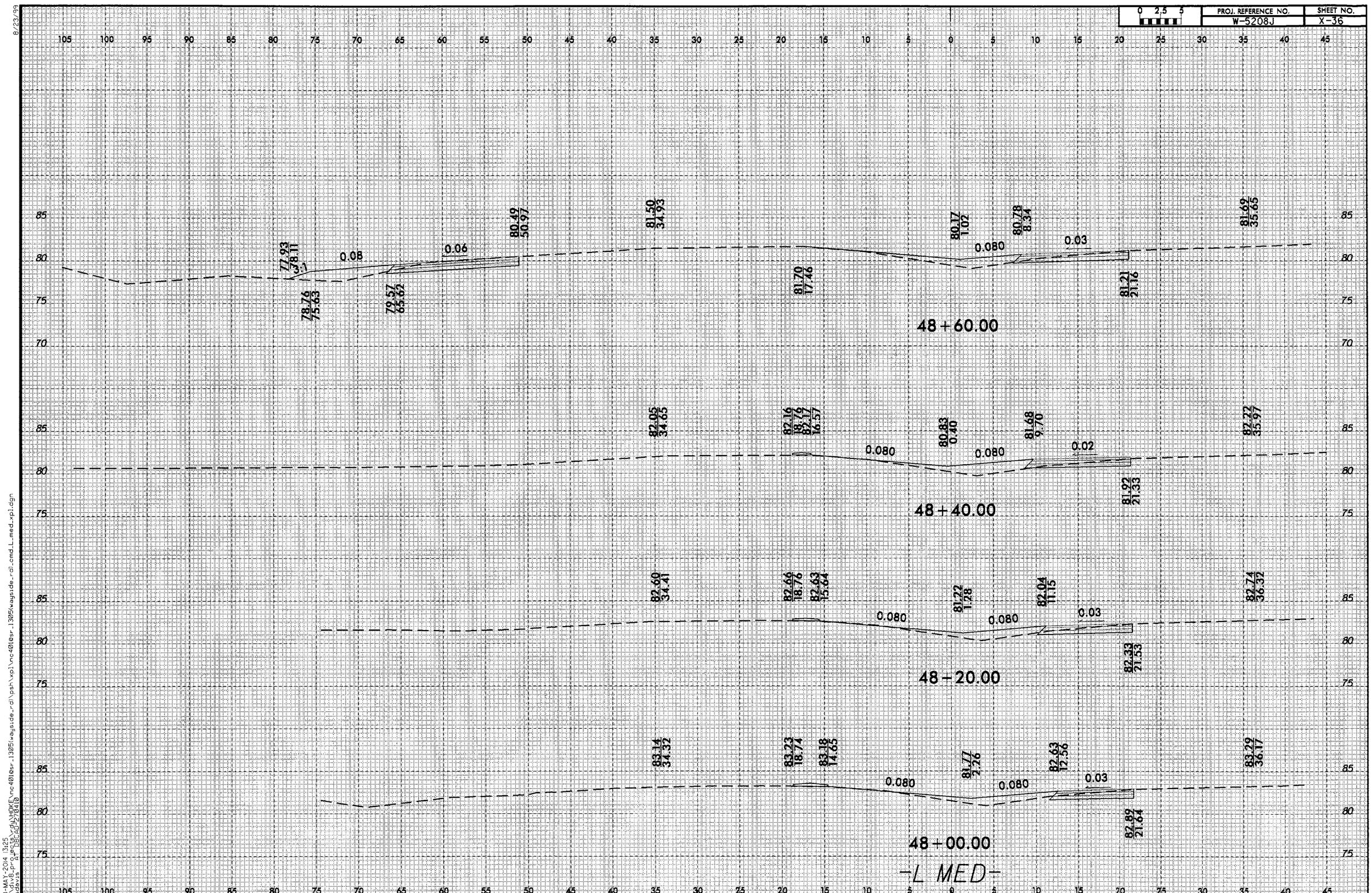

8/23/99

28-MAY-2014 13:25
C:\div8_projects\rdy\HOKE\nc401@sr_1305\wayside_rd\psh\xpl\nc401@sr_1305\wayside_rd\cmd_L_med_xpl.dgn
gsdavis AT DBCAD-270410

0 2.5 5	PROJ. REFERENCE NO.	SHEET NO.
	W-5208J	X-37

8/23/99

49+60.00

Z4.12 77.22 — 3:1 — 0.08 — 0.06 — Z6.54 69.96 — Z7.34 59.97 — Z7.90 50.32 — Z8.70 36.60 — Z8.92 21.65 — 0.0 — Z8.94 20.06 — 0.080 — 6:1 — Z8.28 12.06 — 3.4:1 — Z8.07 4.71 — 0.03 — Z8.57 20.03 — Z9.04 34.33

49+40.00

Z4.12 79.18 — 3:1 — 0.08 — 0.06 — Z7.00 70.54 — Z7.80 60.54 — Z8.44 49.99 — Z9.26 36.34 — Z9.56 21.12 — 0.02 — Z9.58 19.77 — 0.080 — Z8.08 1.61 — 0.080 — Z8.67 5.45 — 0.03 — Z9.13 20.12 — Z9.52 34.63

49+20.00

Z4.00 81.51 — 3:1 — 0.08 — 0.06 — Z7.48 71.06 — Z8.28 61.06 — Z8.98 49.72 — Z9.82 36.02 — 80.15 20.38 — 0.02 — 80.17 19.48 — 0.080 — Z8.64 0.92 — 0.080 — Z9.23 6.19 — 0.03 — Z9.67 20.31 — 80.12 34.92

49+00.00

Z5.66 78.56 — 3:1 — 0.08 — 0.06 — Z8.00 71.52 — Z8.81 61.53 — Z9.54 49.56 — 80.32 35.64 — 80.69 19.39 — 0.02 — 80.69 19.20 — 0.080 — Z9.12 0.18 — 0.080 — Z9.71 6.92 — 0.03 — 80.17 20.61 — 80.65 35.12

48+80.00

Z6.69 77.45 — 3:1 — 0.08 — 0.06 — Z8.52 71.95 — Z9.33 61.95 — 80.09 49.35 — 80.95 35.23 — 81.23 18.36 — 0.080 — Z9.63 0.91 — 0.080 — 80.20 7.63 — 0.04 — 80.66 20.96 — 81.17 35.37

-L MED-

105 100 95 90 85 80 75 70 65 60 55 50 45 40 35 30 25 20 15 10 5 0 5 10 15 20 25 30 35 40 45

28-MAY-2014 13:25
C:\Live_prj\Design\HOKE\nc401asr_1305\wayside_rdl\psh\xpl\nc401asr_1305\wayside_rdl_cmd_L_med_xpl.dgn
Design Profile (Full Depth)

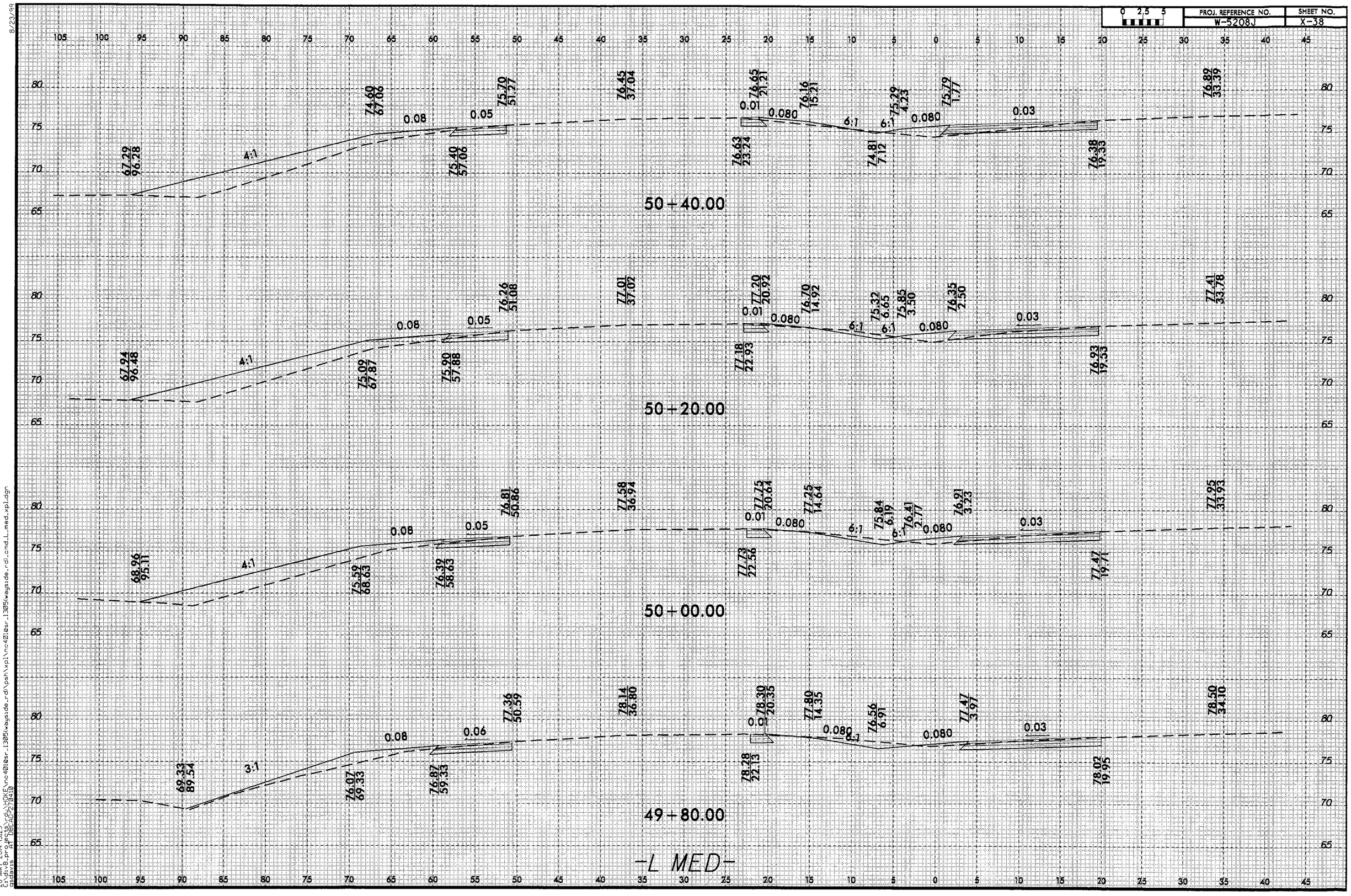

8/23/99
28-MAY-2014 13:25
C:\dwg_proj\rdu\HOKE\nc4018sr_1305\wayside_rd\psh\xpl\nc4018sr_1305wayside_rdl_cmd_L_med_xpl.dgn
asdavis

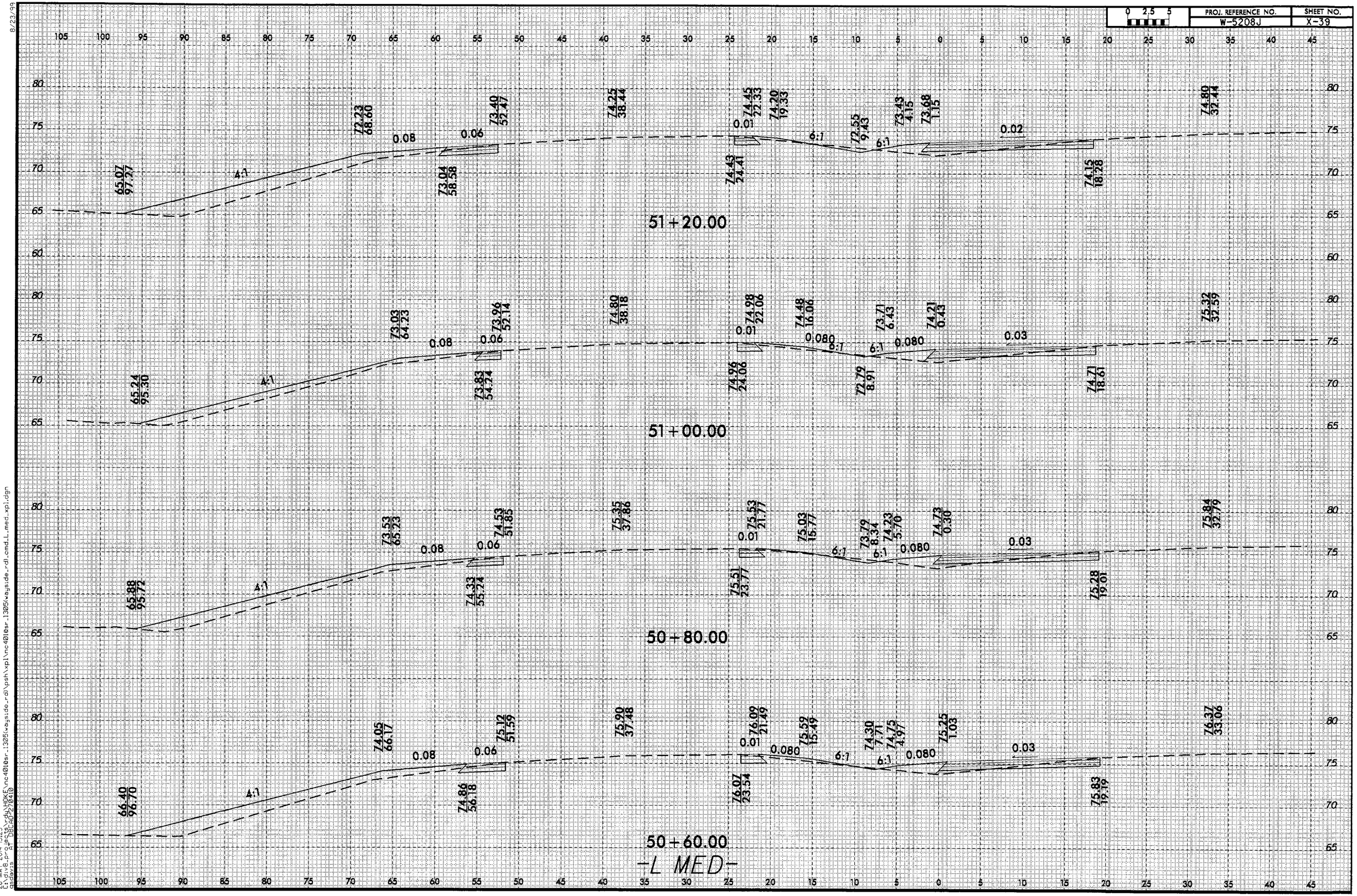

8/23/99

28-MAY-2014 13:25
C:\div8_projects\rdy\HOKE\nc4010sr_1305(wayside_rd)\psh\xpl\nc4010sr_1305(wayside_rd)_cmd_L_med_xpl.dgn
gsdavis AT DBCAD-270410

8/23/99

0 2.5 5	PROJ. REFERENCE NO.	SHEET NO.
	W-5208J	X-40

115 110 105 100 95 90 85 80 75 70 65 60 55 50 45 40 35 30 25 20 15 10 5 0 5 10 15 20 25 30 35

75 70 65 60

62.72 113.92 — 4:1 — 69.00 88.76 — 0.08 — 69.81 78.72 — 0.06 — 71.26 53.54 — 72.06 39.63 — 0.01 — 72.23 23.44 — 6:1 — 70.39 12.41 — 6:1 — 71.79 4.05 — 0.01 — 72.09 16.95 — 72.21 25.56 — 72.71 31.95

52+00.00

63.24 107.20 — 4:1 — 69.77 83.83 — 0.08 — 70.58 73.79 — 0.06 — 71.78 53.29 — 72.61 39.33 — 0.01 — 72.79 23.16 — 6:1 — 70.87 11.66 — 6:1 — 72.26 3.33 — 0.02 — 72.61 17.28 — 72.76 25.31 — 73.23 32.37

51+80.00

64.52 103.08 — 4:1 — 70.57 78.83 — 0.08 — 71.38 68.79 — 0.06 — 72.32 53.04 — 73.15 38.97 — 0.01 — 73.36 22.89 — 6:1 — 71.35 10.83 — 6:1 — 72.72 2.60 — 0.02 — 73.11 17.57 — 73.33 32.33 — 73.33 25.02

51+60.00

64.75 100.29 — 4:1 — 71.39 73.74 — 0.08 — 72.19 63.72 — 0.06 — 72.85 52.74 — 73.70 38.64 — 0.01 — 73.92 22.61 — 6:1 — 71.83 10.05 — 6:1 — 73.19 1.88 — 0.02 — 73.61 17.93 — 74.28 32.35 — 73.89 24.70

51+40.00

-L MED-

28-MAY-2014 13:25
C:\dlv8_projects\rdu\HOKE\nc401@sr_1305\wayside_rd\psh\xpl\nc401@sr_1305wayside_rd_cmd_L_med_xpl.dgn
gsdavis
AT DGCAD27.0410

8/23/99

0 2.5 5	PROJ. REFERENCE NO.	SHEET NO.
	W-5208J	X-41

52+70.00

60.28 131.11 — 4:1 — 66.67 105.51 — 0.08 — 67.47 95.47 — 0.05 — 69.58 54.53 — 70.29 40.61 — 70.52 9.88 — 0.005 — 70.42 10.09 — 70.24 14.09

70.49 26.62 — 70.42 10.09

52+60.00

60.38 133.30 — 4:1 — 68.10 103.17 — 0.09 — 68.98 93.13 — 0.03 — 70.18 54.41 — 70.52 40.43 — 70.77 7.37 — 0.026 — 70.32 10.24 — 0.04 — 70.48 14.24

70.72 26.47 — 70.32 10.24 — 70.55 16.01

52+40.00

60.99 125.12 — 4:1 — 67.66 98.41 — 0.08 — 68.47 88.39 — 0.05 — 70.24 54.15 — 70.97 40.05 — 71.24 23.98 — 0.02 — 6:1 — 69.40 12.96 — 6:1 — 70.66 5.41 — 0.008 — 70.96 14.58 — 0.04

71.20 26.14 — 70.79 10.58 — 71.04 16.43

52+20.00 -L MED-

61.97 119.04 — 4:1 — 69.12 83.59 — 0.08 — 68.32 93.62 — 0.05 — 70.75 53.88 — 71.52 39.87 — 71.74 23.71 — 0.01 — 6:1 — 69.90 12.68 — 6:1 — 71.31 4.77 — 0.01

71.71 25.88 — 71.56 16.68

28-MAY-2014 13:26
C:\Projects\duHOKE\nc4010sr_1305\wayside_rdl\psh\xpl\nc4010sr_1305wayside_rdl_cmd_L_med_xpl.dgn
$(USERNAME)
$(USERPROFILE)
$(ACTIVE_PROJECT)
$(ACTIVE_DESIGN_FILE)
$(ACTIVE_SEED_FILE)
$(ACTIVE_SETTINGS)
$(ACTIVE_WORKSPACE)
$(ACTIVE_WORKSET)
$(ACTIVE_CONFIGURATION)
$(ACTIVE_DATE)
$(ACTIVE_TIME)
$(ACTIVE_DATETIME)
$(ACTIVE_DATEDIR)
$(ACTIVE_TIMEDIR)
$(ACTIVE_DATETIMEDIR

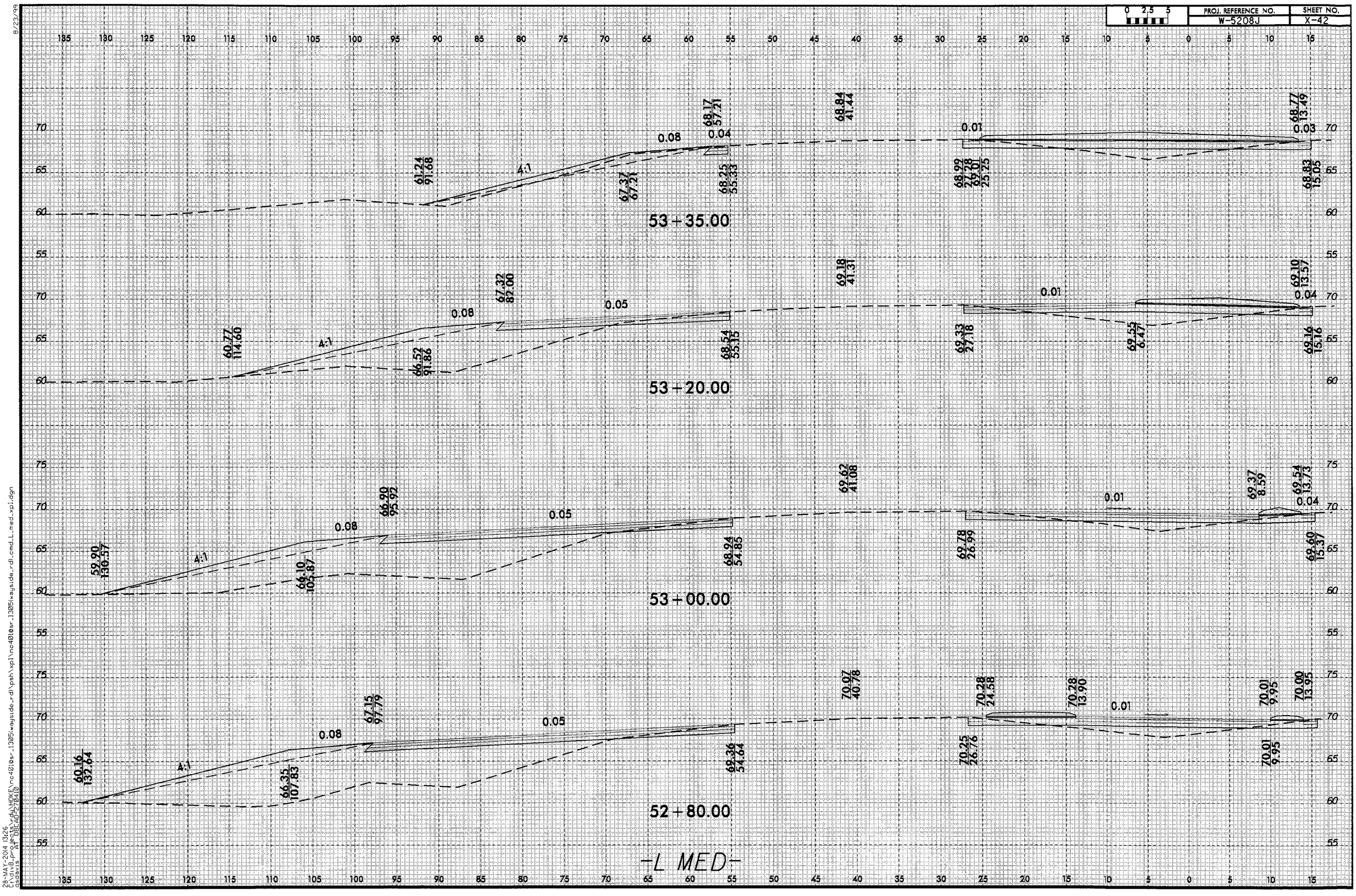

PROJ. REFERENCE NO.
W-5208J
SHEET NO.
X-42
53+35.00
53+20.00
53+00.00
52+80.00
-L MED-

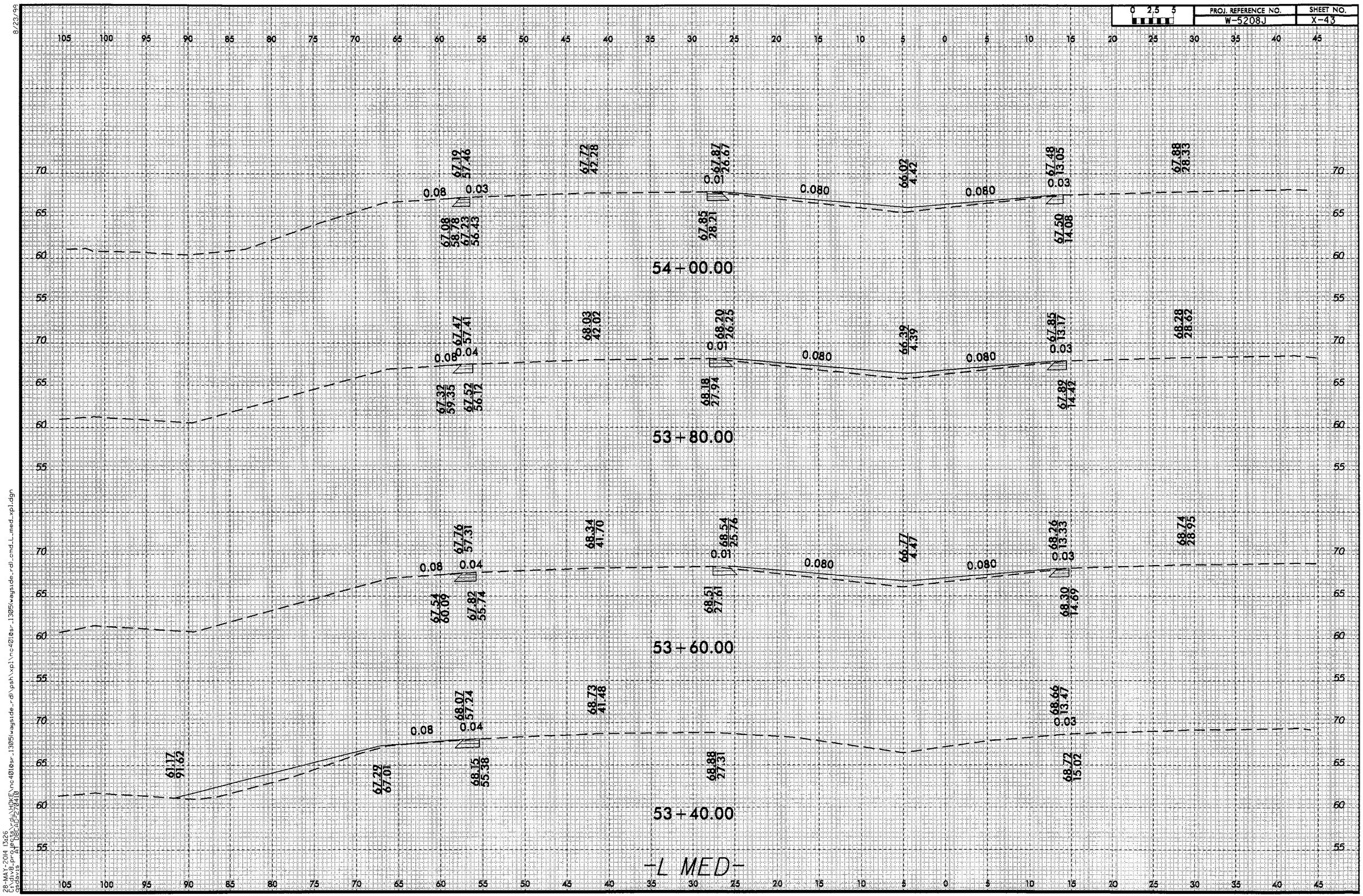

8/23/99

28-MAY-2014 13:26
C:\div8_projects\rdy\HOKE\nc401@sr_1305(wayside_rd)\psh\xpl\nc401@sr_1305(wayside_rd)_cmd_L_med_xpl.dgn
qsdavis AT DBCAD-270410

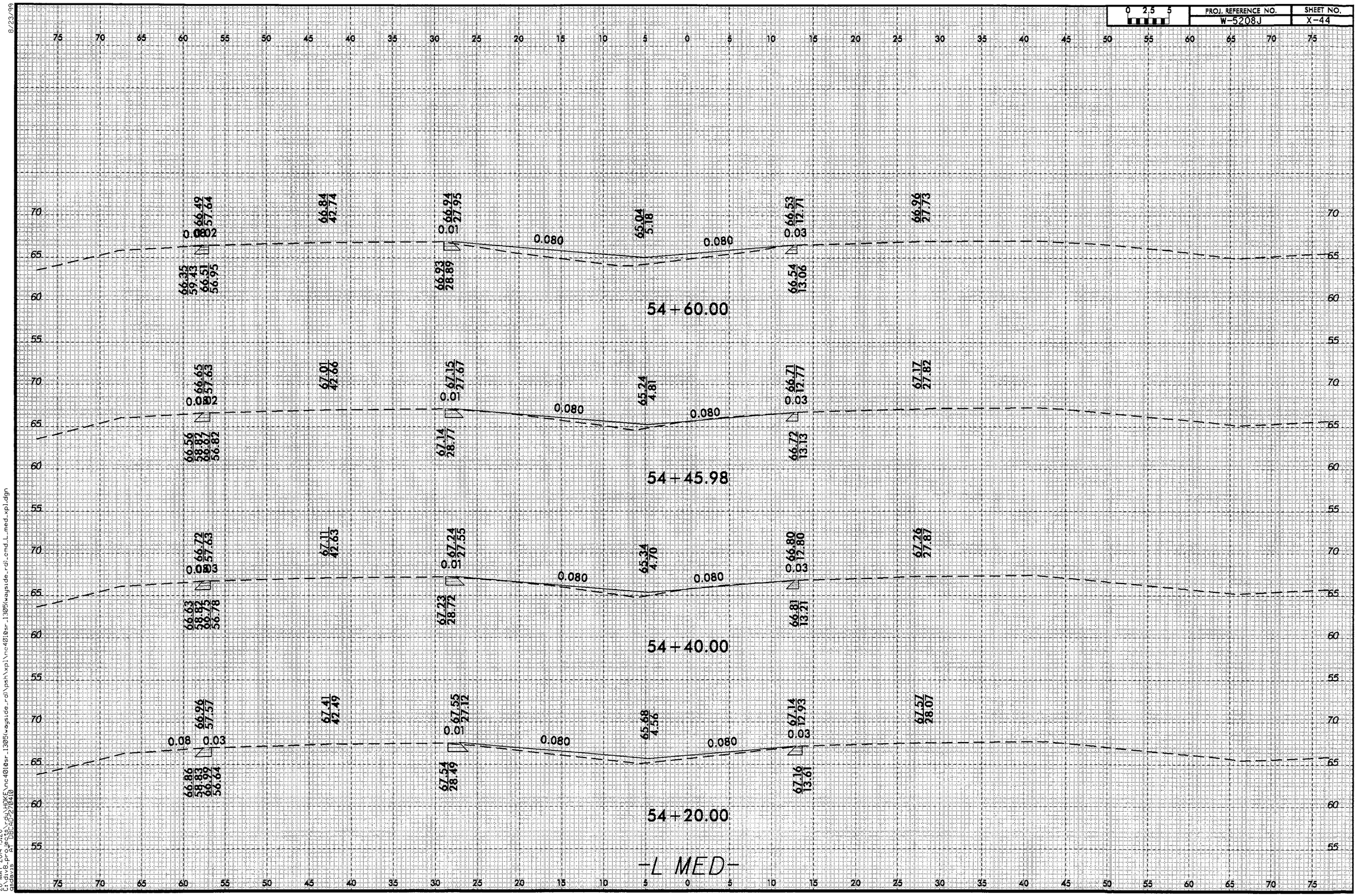

8/23/99

28-MAY-2014 13:26
C:\div8_projects\rdy\HOKE\nc401@sr_1305(wayside_rd)\psh\xpl\nc401@sr_1305(wayside_rd)_cmd_L_med_xpl.dgn
gsdavis AT DBCAD-270410

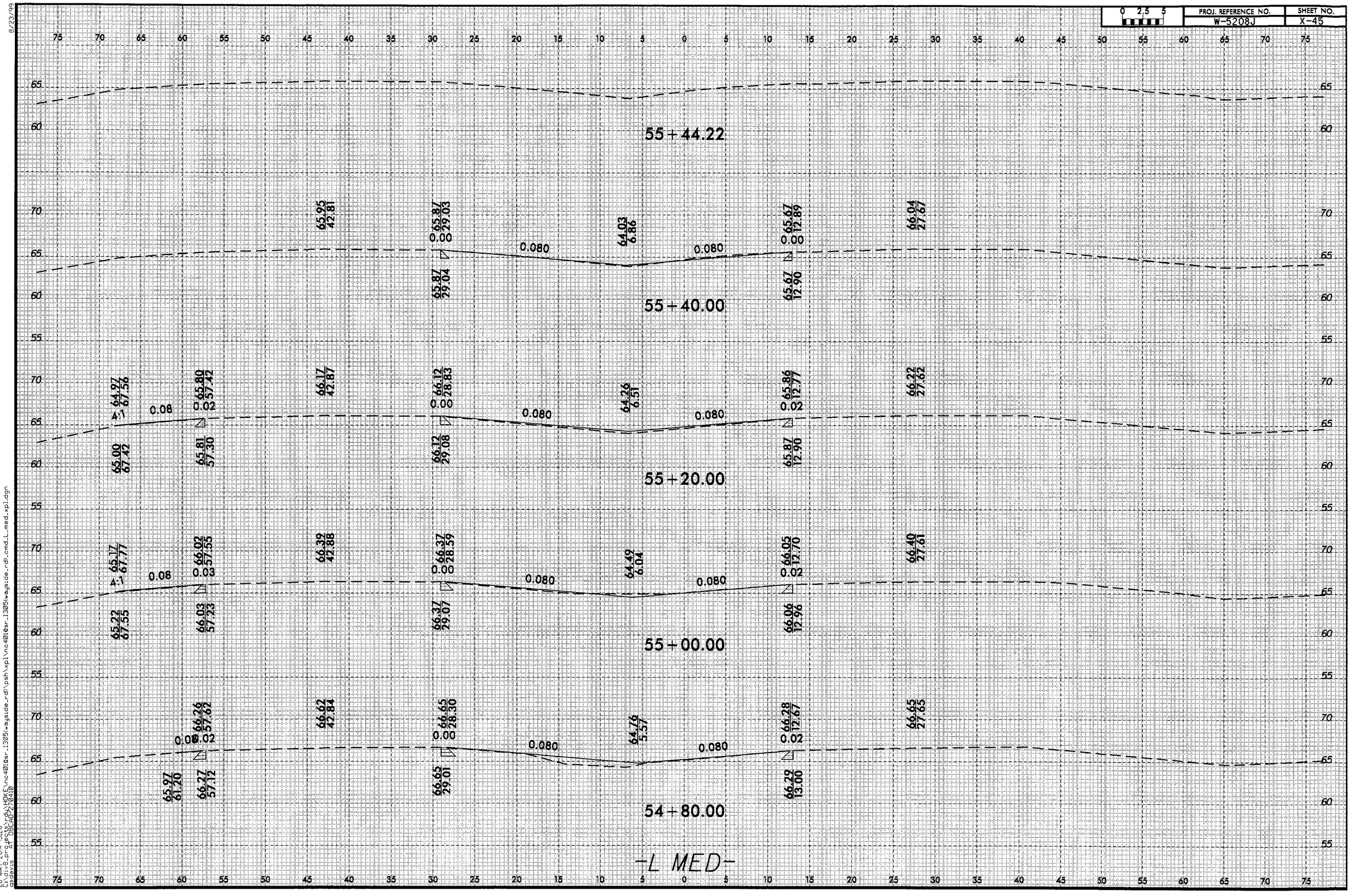

PROJ. REFERENCE NO.
W-5208J
SHEET NO.
X-45
55+44.22
55+40.00
55+20.00
55+00.00
54+80.00
-L MED-

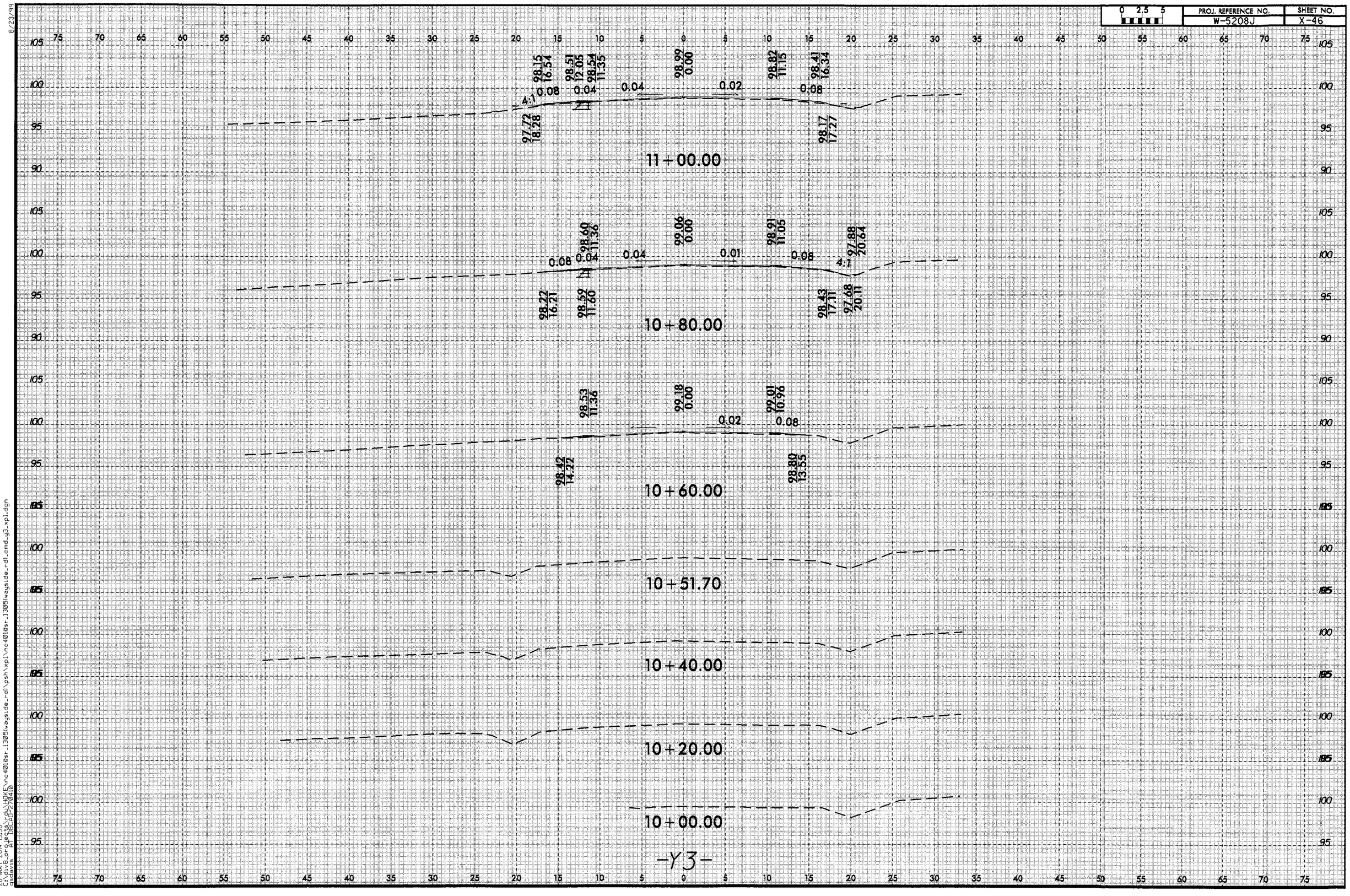

8/23/99

28-MAY-2014 15:30
C:\div8_projects\rdy\HOKE\nc4010sr_1305\wayside_rdl\psh\xpl\nc4010sr_1305(wayside_rdl_cmd_y3_xpl.dgn
gsdavis AT DBCAD-270410

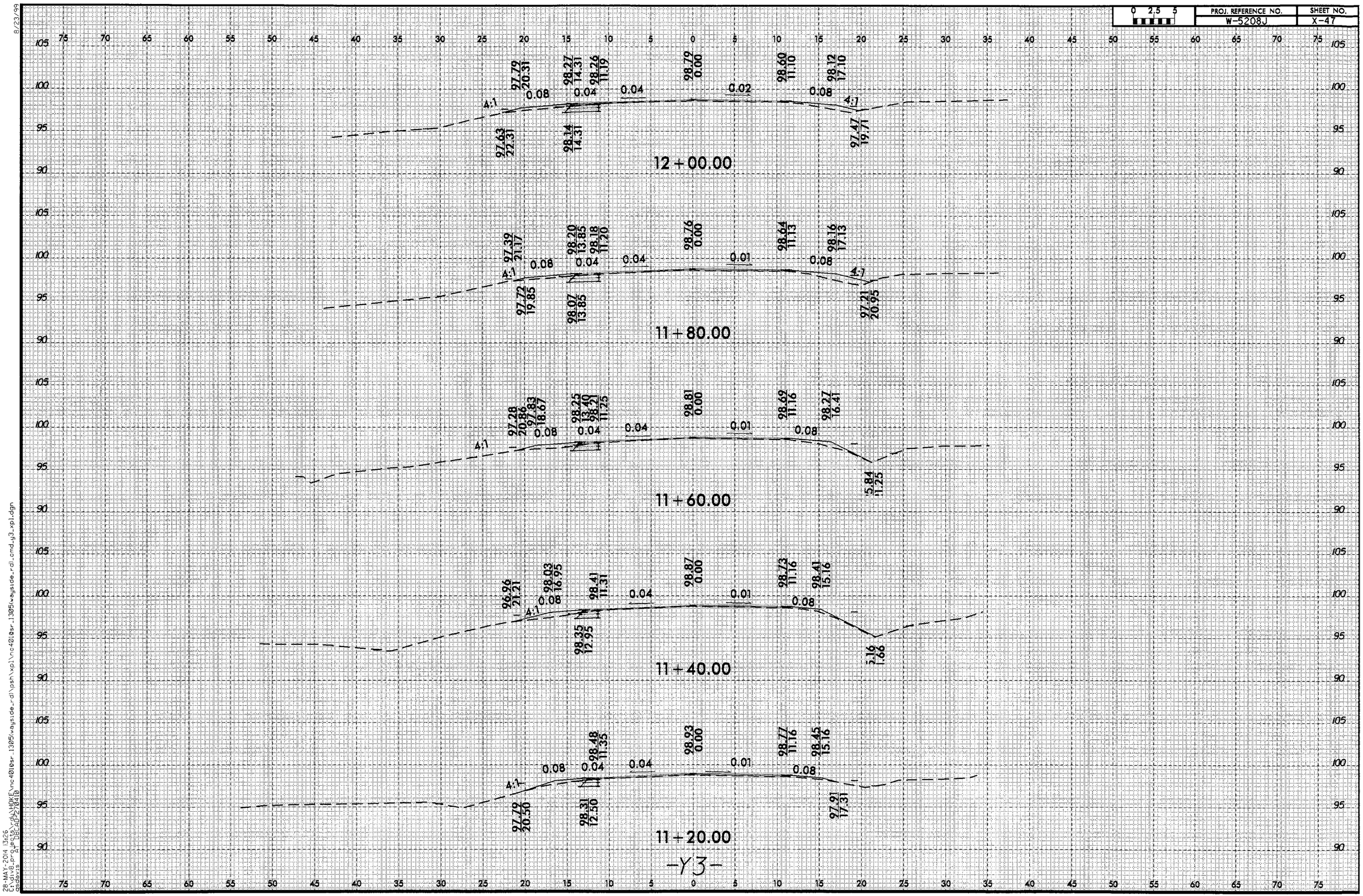

8/23/99

28-MAY-2014 13:26
C:\div8_projects\rdy\HOKE\nc4010sr_1305(wayside_rd)\psh\xpl\nc4010sr_1305(wayside_rd)_cmd_y3_xpl.dgn
gsdavis AT DBCAD-270410

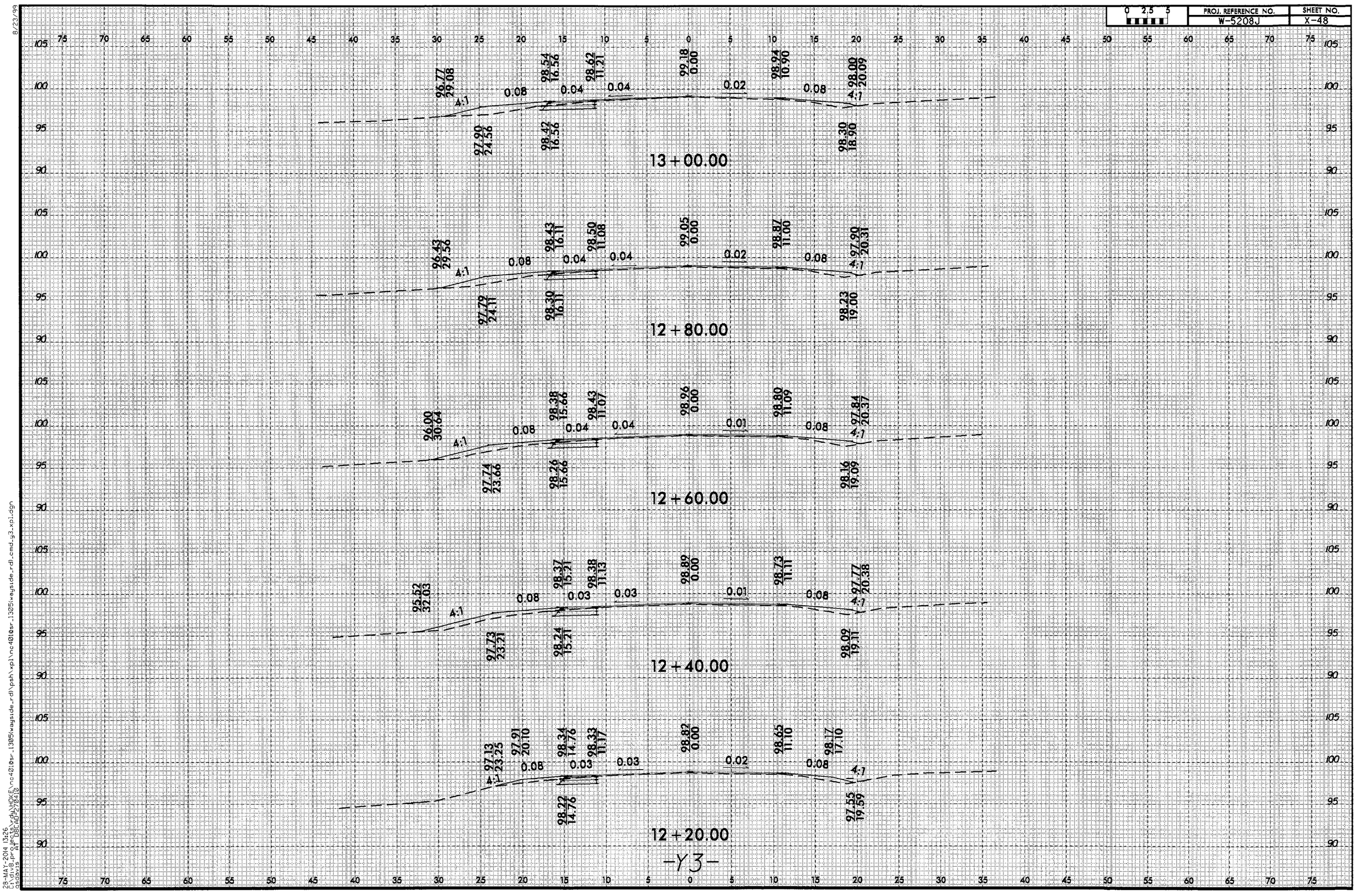

8/23/99

28-MAY-2014 13:26
C:\div8_projects\rdy\HDKE\nc4010sr_1305(wayside_rd)\psh\xpl\nc4010sr_1305(wayside_rd)_cmd_y3_xpl.dgn
gsdavis AT DBCAD-270410

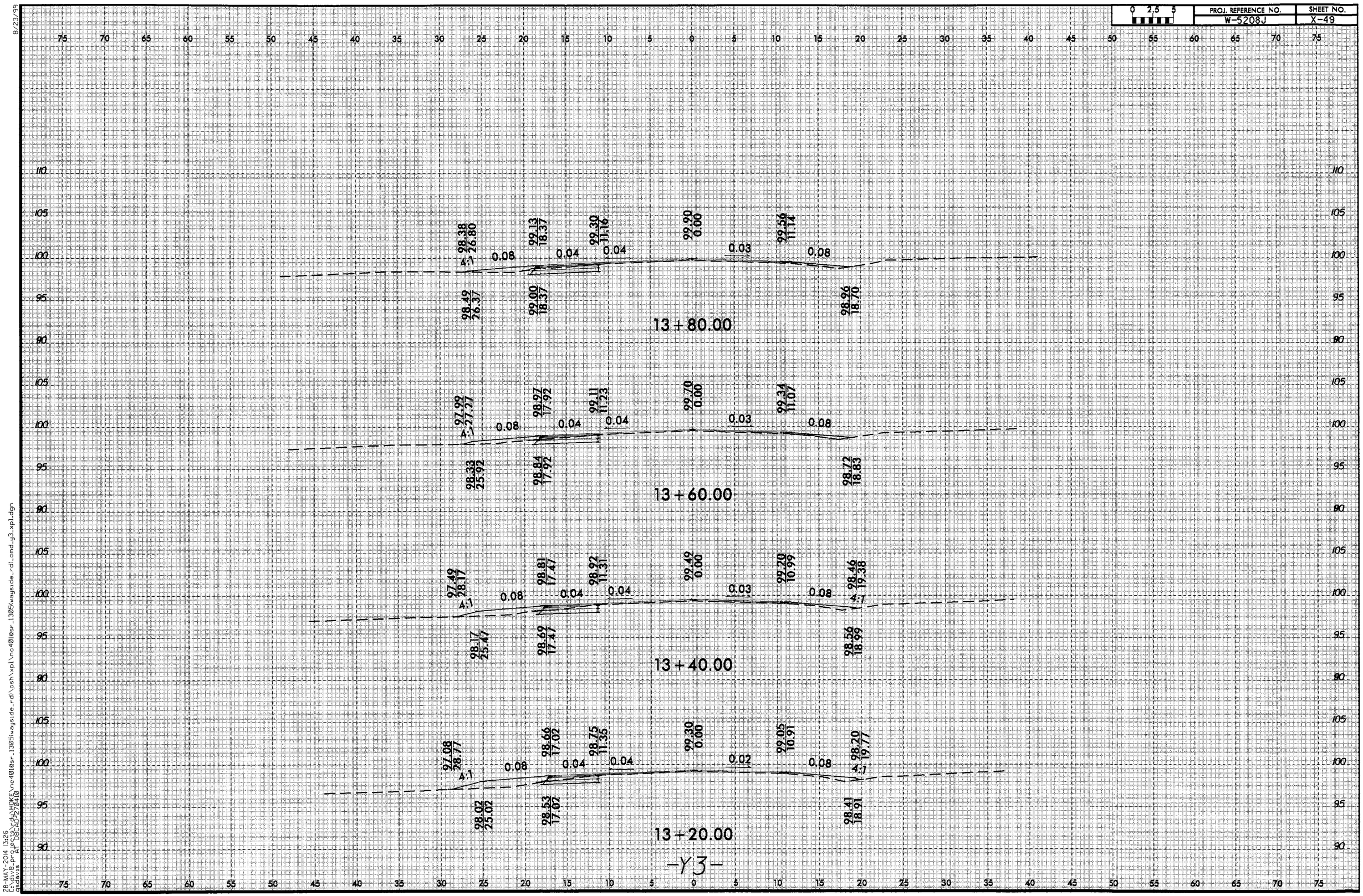

8/23/99

28-MAY-2014 13:26
C:\div8_projects\rdy\HOKE\nc4010sr_1305(wayside_rd)\psh\xpl\nc4010sr_1305(wayside_rd)_cmd_y3_xpl.dgn
qsdavis AT DBCAD-270410

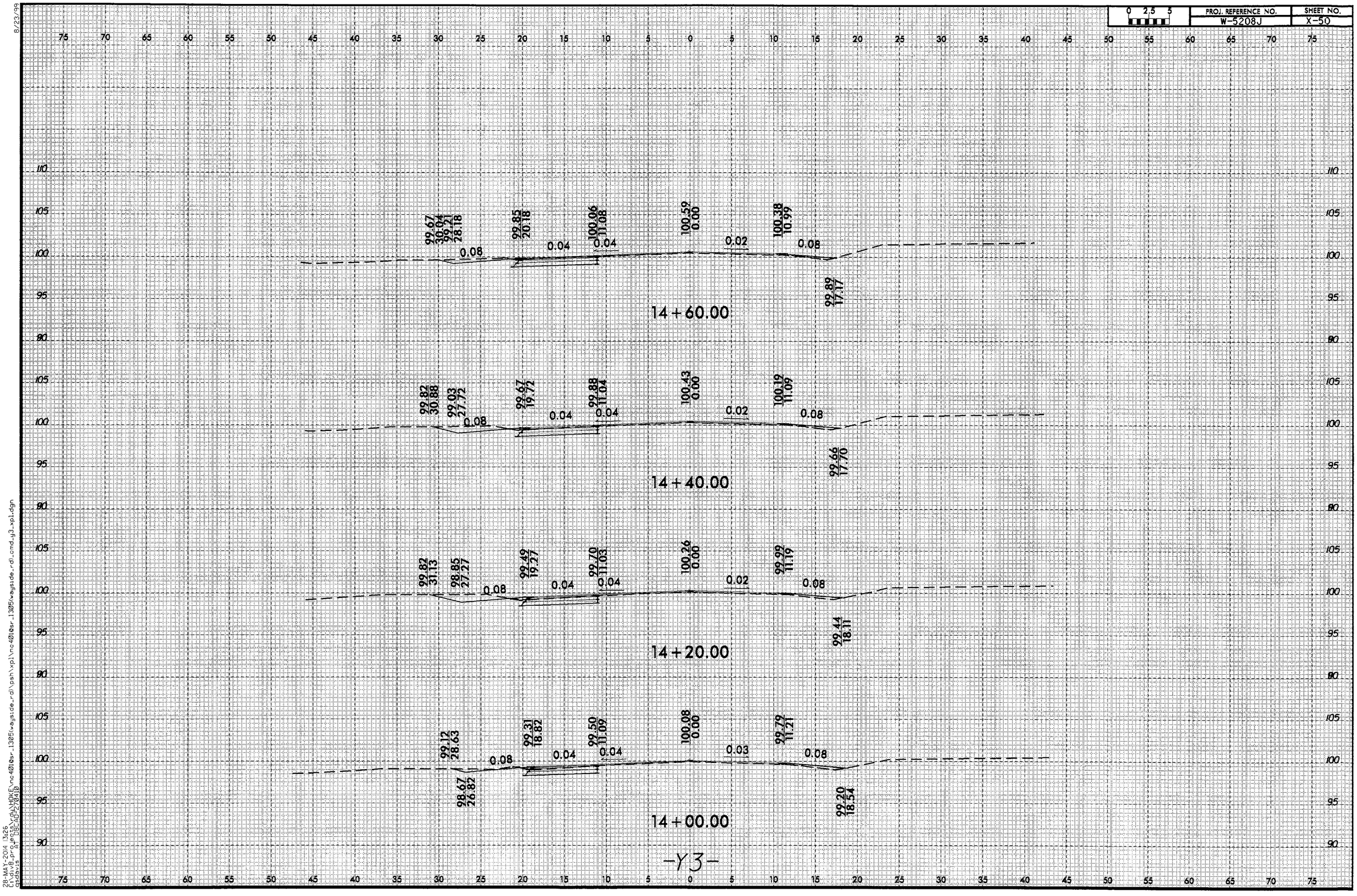

8/23/99

28-MAY-2014 13:26
C:\div8_projects\rdy\HOKE\nc401@sr_1305(wayside_rd)\psh\xpl\nc401@sr_1305(wayside_rd)_cmd_y3_xpl.dgn
gsdavis AT DBCAD-270410

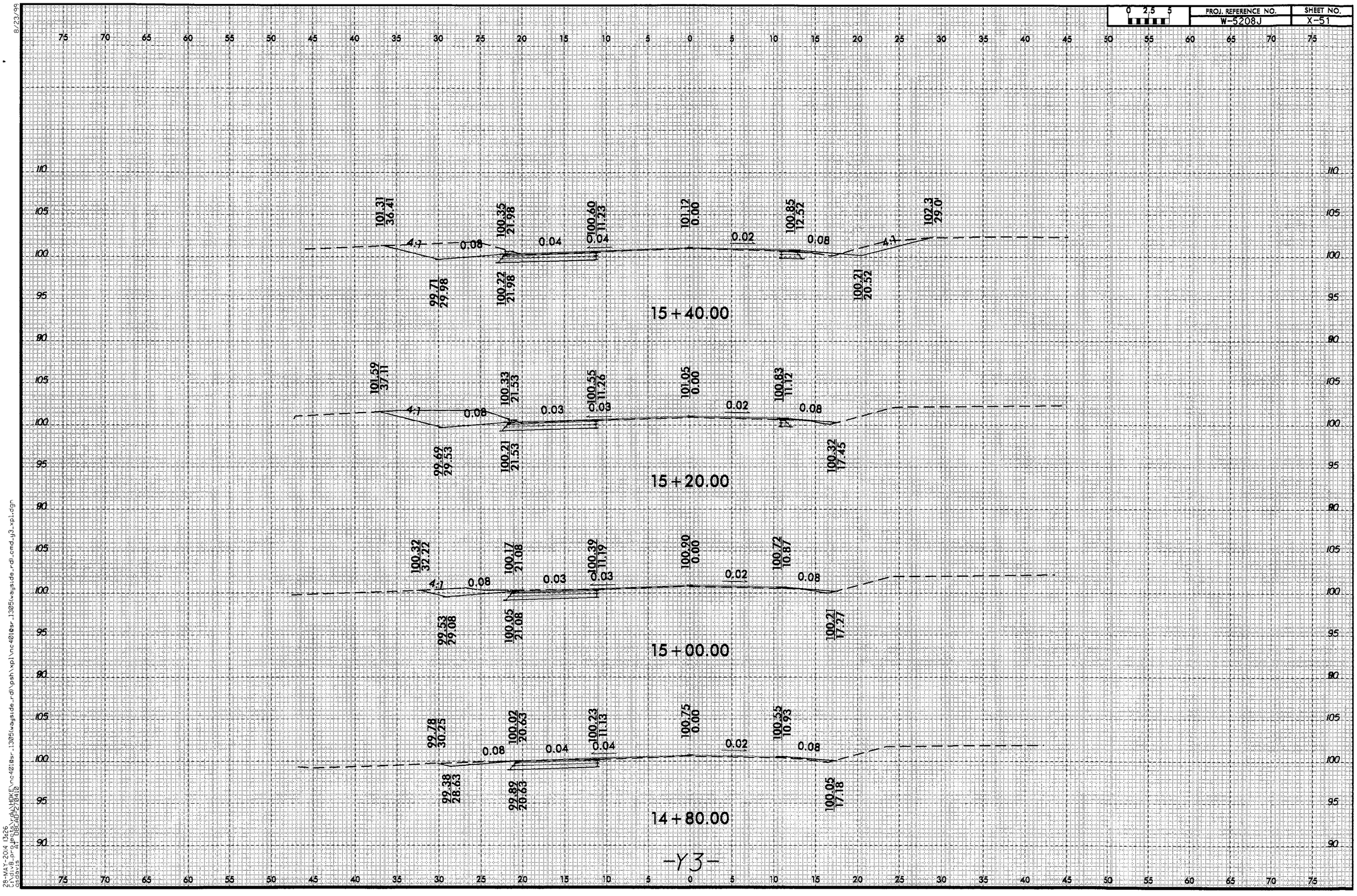

PROJ. REFERENCE NO.
W-5208J
SHEET NO.
X-51
0 2.5 5
15+40.00
101.31 36.41
100.35 21.98
100.60 11.23
101.12 0.00
100.85 12.52
102.3 29.0
99.71 29.98
100.22 21.98
100.21 20.52
15+20.00
101.59 37.11
100.33 21.53
100.55 11.26
101.05 0.00
100.83 11.12
99.69 29.53
100.21 21.53
100.32 17.45
15+00.00
100.32 32.22
100.17 21.08
100.39 11.19
100.90 0.00
100.72 10.87
99.53 29.08
100.05 21.08
100.21 17.27
14+80.00
99.78 30.25
100.02 20.63
100.23 11.13
100.75 0.00
100.55 10.93
99.38 28.63
99.89 20.63
100.05 17.18
4:1
0.08
0.04
0.02
0.03
-Y3-

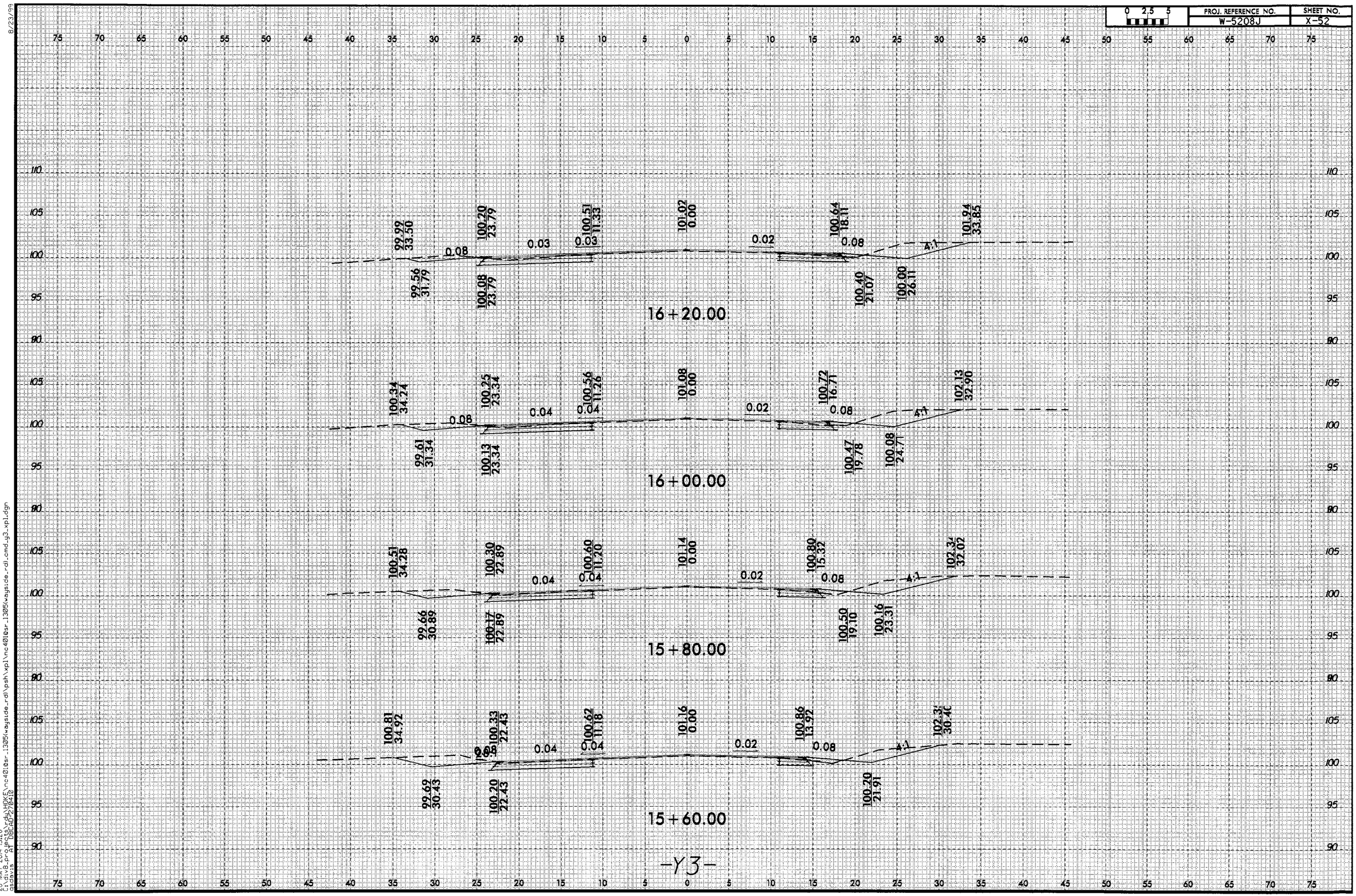

PROJ. REFERENCE NO.
W-5208J
SHEET NO.
X-52
16+20.00
99.99 33.50
100.20 23.79
100.51 11.33
101.02 0.00
100.64 18.11
101.94 33.85
99.56 31.79
100.08 23.79
100.40 21.07
100.00 26.11
16+00.00
100.34 34.24
100.25 23.34
100.56 11.26
101.08 0.00
100.72 16.71
102.13 32.90
99.61 31.34
100.13 23.34
100.47 19.78
100.08 24.71
15+80.00
100.51 34.28
100.30 22.89
100.60 11.20
101.14 0.00
100.80 15.32
102.34 32.02
99.66 30.89
100.17 22.89
100.50 19.10
100.16 23.31
15+60.00
100.81 34.92
100.33 22.43
100.62 11.18
101.16 0.00
100.86 13.92
102.31 30.40
99.69 30.43
100.20 22.43
100.20 21.91
-Y3-

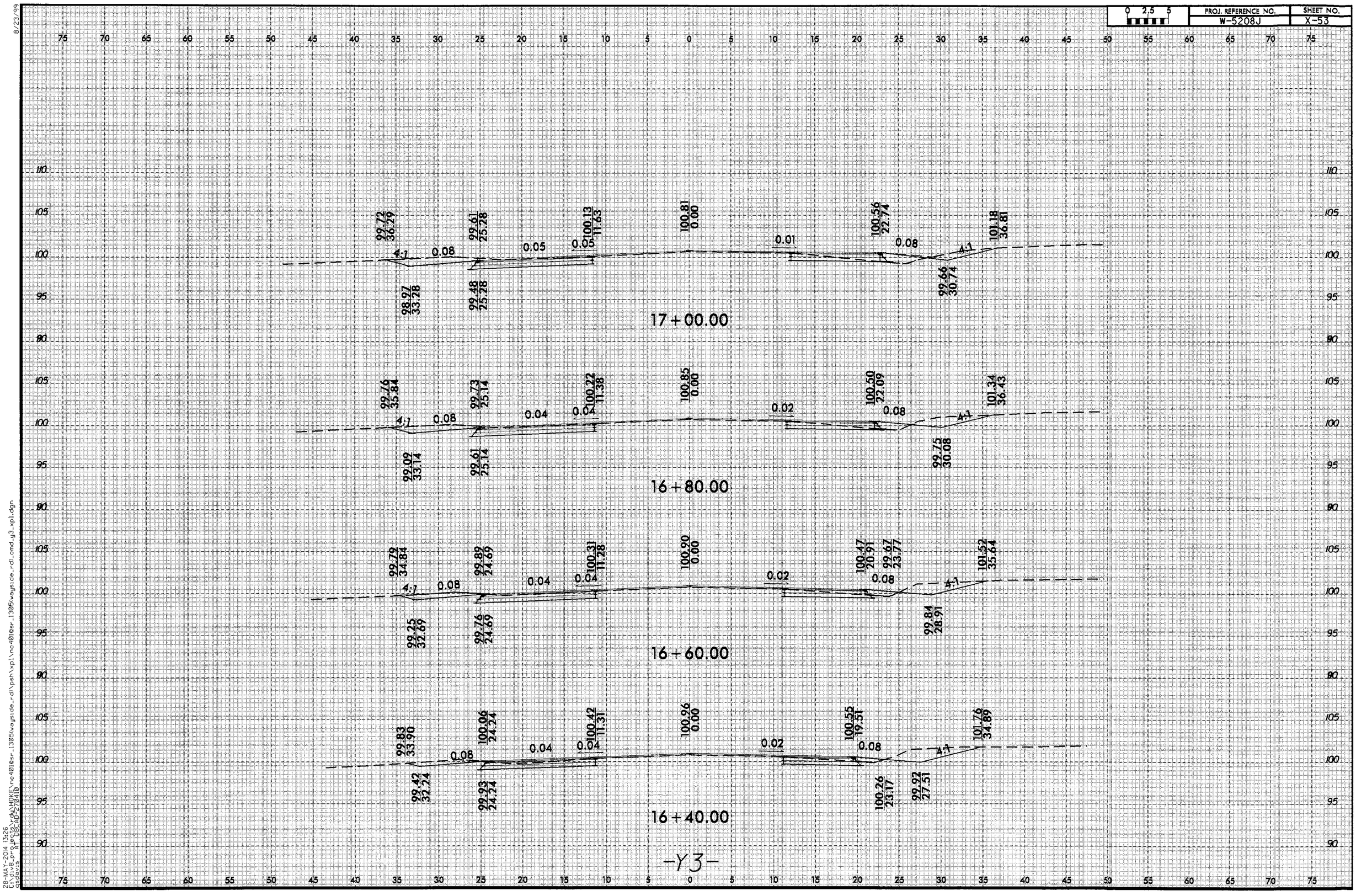

PROJ. REFERENCE NO.
W-5208J
SHEET NO.
X-53
17+00.00
16+80.00
16+60.00
16+40.00
-Y3-

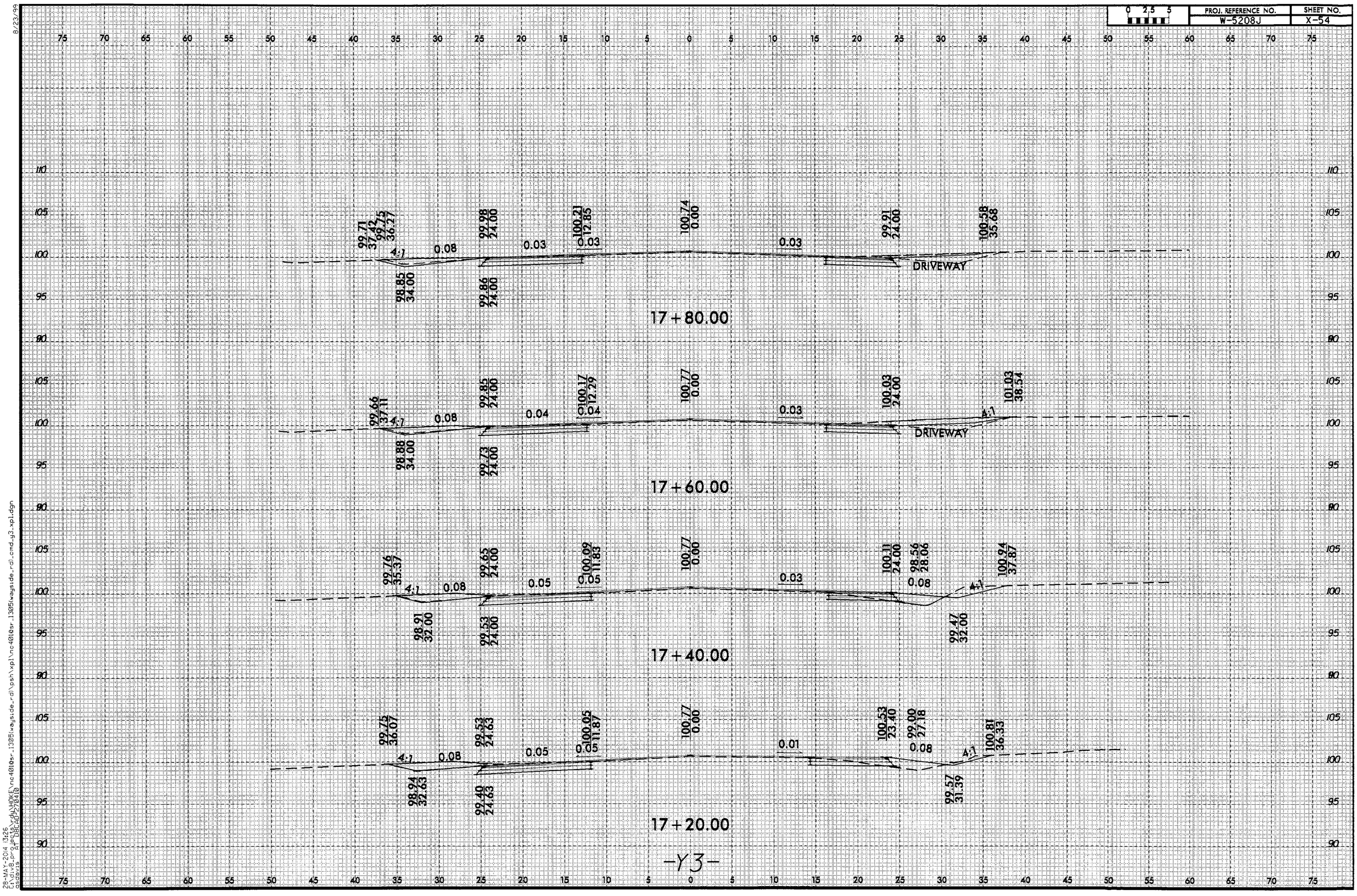

PROJ. REFERENCE NO.
W-5208J
SHEET NO.
X-54
0 2.5 5
17+80.00
99.71 37.42
99.75 36.27
99.98 24.00
100.21 12.85
100.74 0.00
99.91 24.00
100.58 35.68
98.85 34.00
99.86 24.00
4:1
0.08
0.03
0.03
0.03
DRIVEWAY
17+60.00
99.66 37.11
99.85 24.00
100.17 12.29
100.77 0.00
100.03 24.00
101.03 38.54
98.88 34.00
99.73 24.00
4:1
0.08
0.04
0.04
0.03
4:1
DRIVEWAY
17+40.00
99.76 35.37
99.65 24.00
100.09 11.83
100.77 0.00
100.11 24.00
98.56 28.06
100.94 37.87
98.91 32.00
99.53 24.00
99.47 32.00
4:1
0.08
0.05
0.05
0.03
0.08
4:1
17+20.00
99.75 36.07
99.53 24.63
100.05 11.87
100.77 0.00
100.53 23.40
99.00 27.18
100.81 36.33
98.94 32.63
99.40 24.63
99.57 31.39
4:1
0.08
0.05
0.05
0.01
0.08
4:1
-Y3-

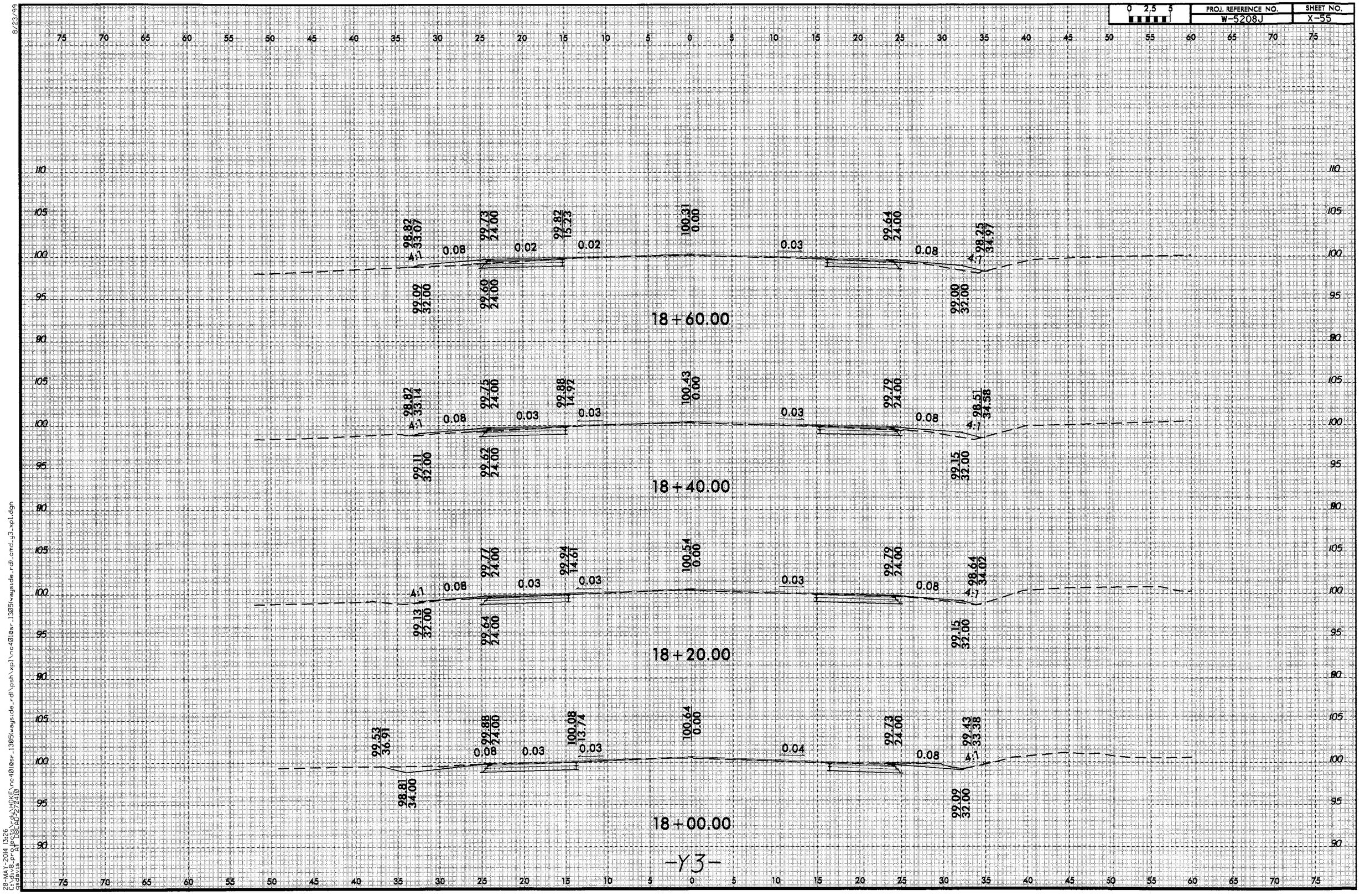

8/23/99

28-MAY-2014 13:26
C:\div8_projects\rdy\HOKE\nc401@sr_1305(wayside_rd)\psh\xpl\nc401@sr_1305(wayside_rd)_cmd_y3_xpl.dgn
gsdavis AT DBCAD-270410

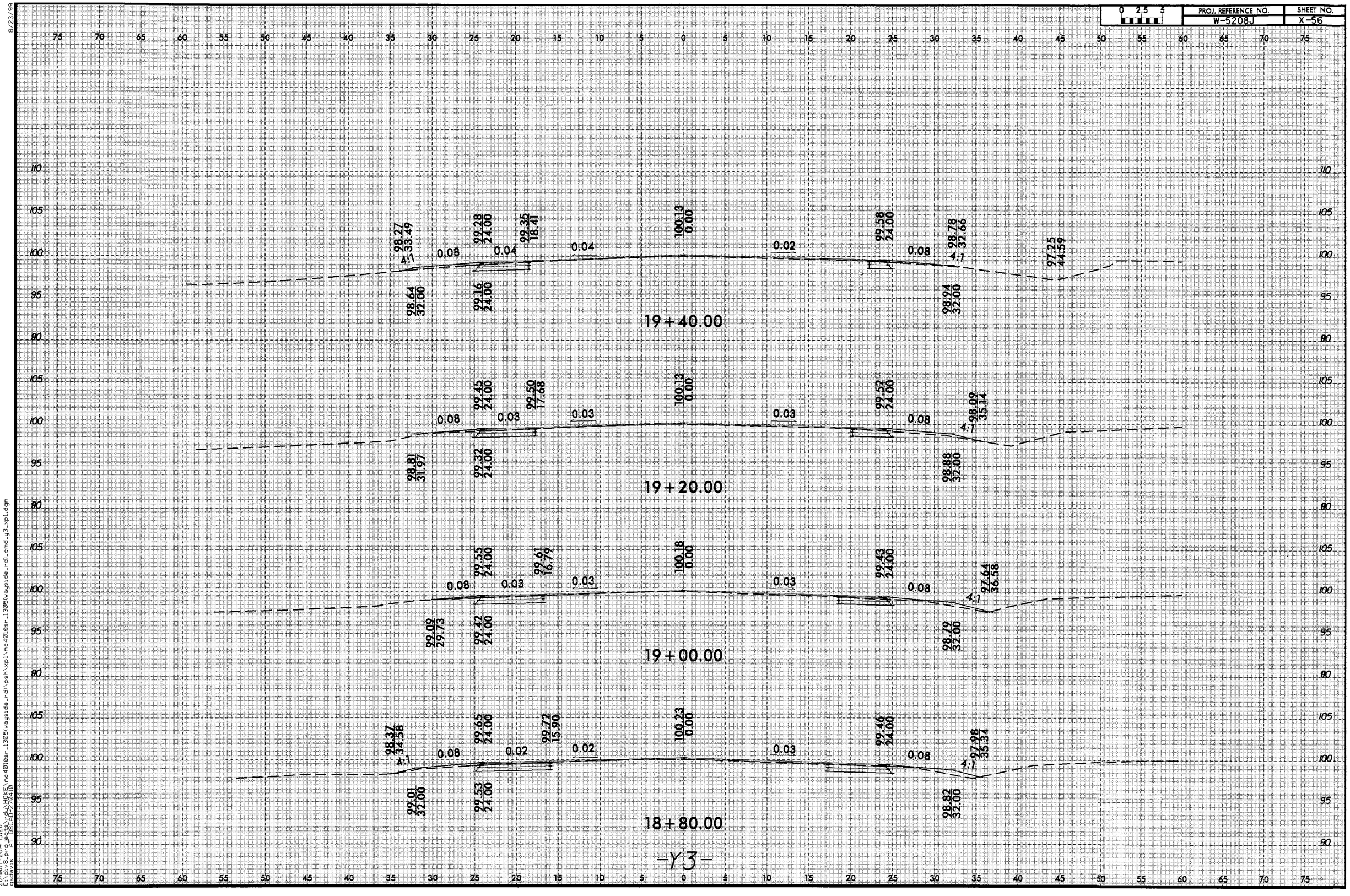

8/23/99

28-MAY-2014 13:26
C:\div8_projects\rdy\HOKE\nc401@sr_1305(wayside_rd)\psh\xpl\nc401@sr_1305(wayside_rd)_cmd_y3_xpl.dgn
gscavis AT DBCAD-270410

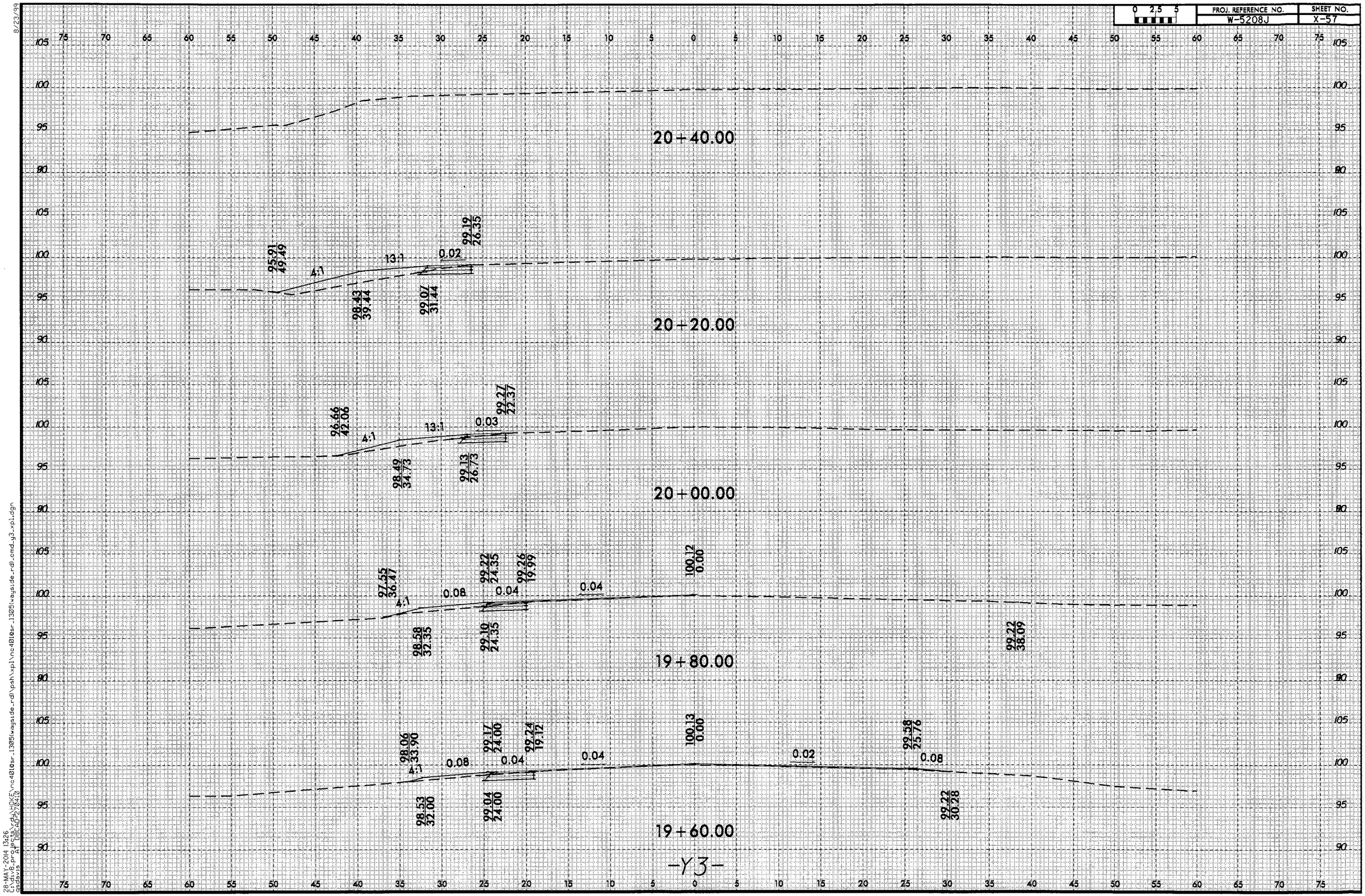

8/23/99

28-MAY-2014 13:26
C:\div8_projects\rdy\HOKE\nc401@sr_1305\wayside_rd\psh\xpl\nc401@sr_1305\wayside_rd\cmd_y3_xpl.dgn
gsdavis AT DBCAD-270410