09/08/99

PROJECT: BD-5108AD

CONTRACT:

See Sheet 1-A For Index of Sheets
See Sheet 1-B For Conventional symbols
See Sheet 1-C For Survey Control Sheet

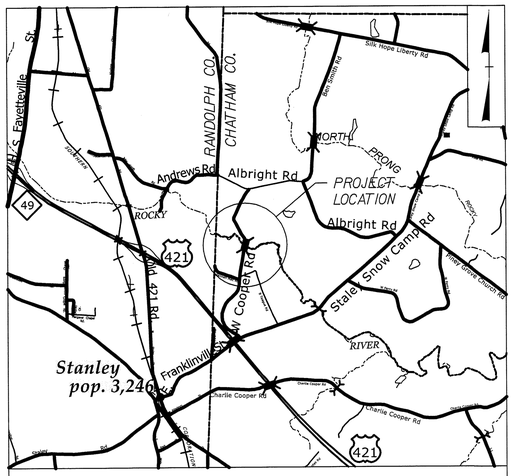

VICINITY MAP

STATE OF NORTH CAROLINA
DIVISION OF HIGHWAYS

CHATHAM COUNTY

STATE	STATE PROJECT REFERENCE NO.	SHEET NO.	TOTAL SHEETS
N.C.	BD-5108AD	1	

STATE PROJ. NO.	F.A. PROJ. NO.	DESCRIPTION
45354.1.31		PE
45354.2.FD31		R/W & UTIL
45354.3.FD31		CONST

LOCATION: BRIDGE NO. 287 ON SR 1305 (COOPER ROAD) OVER PRONG OF ROCKY RIVER

TYPE OF WORK: GRADING, DRAINAGE & STRUCTURE

NC GRID NAD 83 NA 2011

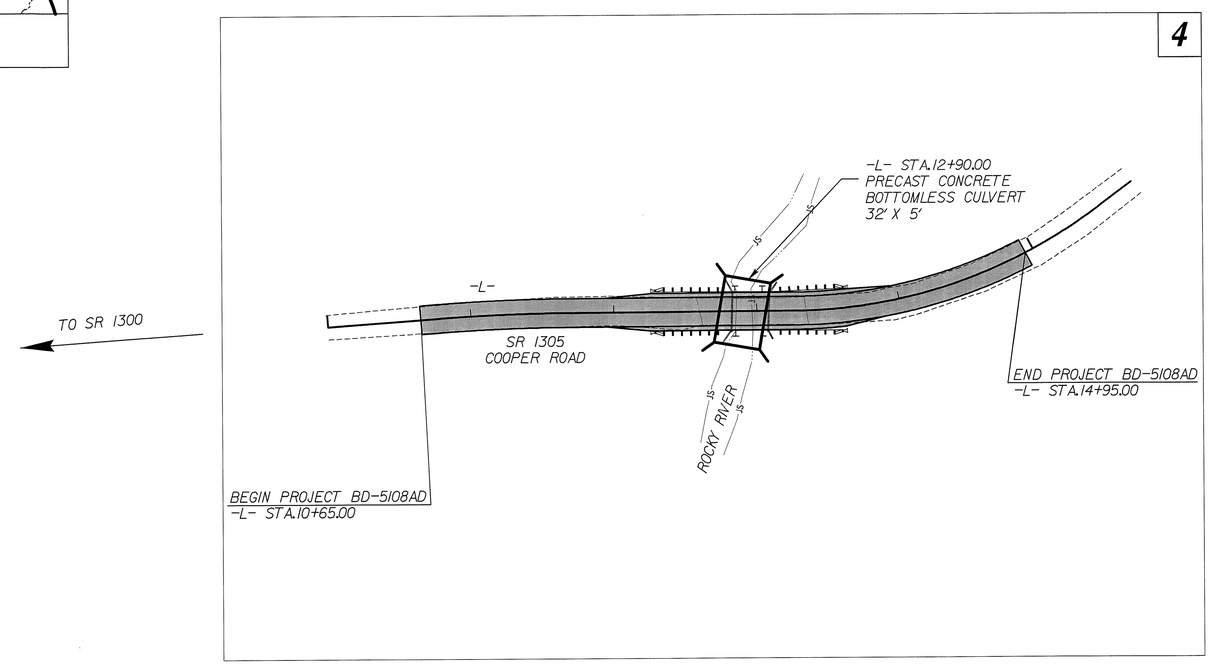

GRAPHIC SCALES

20 10 0 20 40
PLANS

50 25 0 50 100
PROFILE (HORIZONTAL)

10 5 0 10 20
PROFILE (VERTICAL)

DESIGN DATA

ADT 2013 = 116

T = 6 % *
V = 35 MPH
* TTST = 3% DUAL 3%
FUNC CLASS = LOCAL

SUB-REGIONAL TIER

PROJECT LENGTH

LENGTH OF ROADWAY PROJECT BD-5108AD = 0.075 MI
LENGTH OF STRUCTURE PROJECT BD-5108AD = 0.006 MI
TOTAL LENGTH OF PROJECT BD-5108AD = 0.081 MI

Prepared In the Office of:
SEPI ENGINEERING & CONSTRUCTION
1025 Wade Avenue
Raleigh, NC 27605
Tel:919-789-9977
Fax:919-789-9581
License: C-2197

FOR THE NORTH CAROLINA DEPT. OF TRANSPORATION

2012 STANDARD SPECIFICATIONS

RIGHT OF WAY DATE:
FEBRUARY, 2014

LETTING DATE:
JULY 22, 2014

STEVE SCOTT, PE
PROJECT ENGINEER

AGNIESZKA NAU, PE
PROJECT DESIGN ENGINEER

TIM WELCH, PE
NCDOT CONTACT

HYDRAULICS ENGINEER

NORTH CAROLINA PROFESSIONAL SEAL 035621 ENGINEER ANDREW M. HOWELL

SIGNATURE: 6-25-14 P.E.

ROADWAY DESIGN ENGINEER

NORTH CAROLINA PROFESSIONAL SEAL 029712 ENGINEER AGNIESZKA J. NAU

SIGNATURE: 06-25-14 P.E.

STATE OF NORTH CAROLINA DEPARTMENT OF TRANSPORTATION

$$$$SYSTIME$$$$
$$$$USERNAME$$$$

PROJECT REFERENCE NO.	SHEET NO.
BD-5108AD	1-A

STATE OF NORTH CAROLINA
DIVISION OF HIGHWAYS

INDEX OF SHEETS, GENERAL NOTES, AND LIST OF STANDARDS

INDEX OF SHEETS

SHEET NUMBER	SHEET
1	TITLE SHEET
1-A	INDEX OF SHEETS, GENERAL NOTES, AND LIST OF STANDARD DRAWINGS
1-B	CONVENTIONAL SYMBOLS
1-C	SURVEY CONTROL
2	PAVEMENT SCHEDULE AND TYPICAL SECTIONS
2-A	RIP RAP PROTECTION DETAIL
3	SUMMARY OF QUANTITIES
3A	SUMMARY OF EARTHWORK AND GUARDRAIL
4	PLAN SHEET
5	PROFILE SHEET
TMP-1 THRU TMP-4	TRAFFIC MANAGEMENT PLANS
EC-1 THRU EC-7	EROSION CONTROL PLANS
X-1 THRU X-8	CROSS-SECTIONS
C-1 THRU C-4	STRUCTURE PLANS
UO-1 THRU UO-2	UTILITIES BY OTHERS

GENERAL NOTES:

2012 SPECIFICATIONS
EFFECTIVE: 01-17-12
REVISED: 11-01-11

GRADE LINE:
GRADING AND SURFACING:

THE GRADE LINES SHOWN DENOTE THE FINISHED ELEVATION OF THE PROPOSED SURFACING AT GRADE POINTS SHOWN ON THE TYPICAL SECTIONS. GRADE LINES MAY BE ADJUSTED AT THEIR BEGINNING AND ENDING AND AT STRUCTURES AS DIRECTED BY THE ENGINEER IN ORDER TO SECURE A PROPER TIE-IN.

SUPERELEVATION:

ALL CURVES ON THIS PROJECT SHALL BE SUPERELEVATED IN ACCORDANCE WITH STD. NO. 225.04 USING THE RATE OF SUPERELEVATION AND RUNOFF SHOWN ON THE PLANS. SUPERELEVATION IS TO BE REVOLVED ABOUT THE GRADE POINTS SHOWN ON THE TYPICAL SECTIONS.

SHOULDER CONSTRUCTION:

ASPHALT, EARTH, AND CONCRETE SHOULDER CONSTRUCTION ON THE HIGH SIDE OF SUPERELEVATED CURVES SHALL BE IN ACCORDANCE WITH STD. NO. 560.01.

GUARDRAIL:

THE GUARDRAIL LOCATIONS SHOWN ON THE PLANS MAY BE ADJUSTED DURING CONSTRUCTION AS DIRECTED BY THE ENGINEER. THE CONTRACTOR SHOULD CONSULT WITH THE ENGINEER PRIOR TO ORDERING GUARDRAIL MATERIAL.

UTILITIES:

ANY RELOCATION OF EXISTING UTILITIES WILL BE ACCOMPLISHED BY OTHERS.

RIGHT-OF-WAY MARKERS:

ALL RIGHT-OF-WAY MARKERS ON THIS PROJECT SHALL BE PLACED BY CONTRACT.

EFF. 01-17-12
REV. 11-01-11

2012 ROADWAY ENGLISH STANDARD DRAWINGS

The following Roadway Standards as appear in "Roadway Standard Drawings" Highway Design Branch - N. C. Department of Transportation - Raleigh, N. C., Dated July 18, 2006 are applicable to this project and by reference hereby are considered a part of these plans:

STD.NO.	TITLE
DIVISION 2 - EARTHWORK	
200.03	Method of Clearing - Method III
225.02	Guide for Grading Subgrade - Secondary and Local
225.04	Method of Obtaining Superelevation - Two Lane Pavement
DIVISION 3 - PIPE CULVERTS	
310.10	Driveway Pipe Construction
DIVISION 5 - SUBGRADE, BASES AND SHOULDERS	
560.01	Method of Shoulder Construction - High Side of Superelevated Curve - Method I
DIVISION 8 - INCIDENTALS	
862.01	Guardrail Placement
862.02	Guardrail Installation
876.02	Guide for Rip Rap at Pipe Outlets
876.04	Drainage Ditches with Class 'B' Rip Rap

$$$$USERNAME$$$$ $$$$SYSTIME$$$$ $$$$DGN$$$$

04/16/11

PROJECT REFERENCE NO.	SHEET NO.
BD-5108AD	1B

Note: Not to Scale

****S.U.E. = Subsurface Utility Engineering***

STATE OF NORTH CAROLINA
DIVISION OF HIGHWAYS

CONVENTIONAL PLAN SHEET SYMBOLS

BOUNDARIES AND PROPERTY:

- State Line
- County Line
- Township Line
- City Line
- Reservation Line
- Property Line
- Existing Iron Pin — EIP
- Property Corner
- Property Monument — ECM
- Parcel/Sequence Number — 123
- Existing Fence Line
- Proposed Woven Wire Fence
- Proposed Chain Link Fence
- Proposed Barbed Wire Fence
- Existing Wetland Boundary — WLB
- Proposed Wetland Boundary — WLB
- Existing Endangered Animal Boundary — EAB
- Existing Endangered Plant Boundary — EPB
- Known Soil Contamination: Area or Site
- Potential Soil Contamination: Area or Site

BUILDINGS AND OTHER CULTURE:

- Gas Pump Vent or U/G Tank Cap
- Sign — S
- Well — W
- Small Mine
- Foundation
- Area Outline
- Cemetery
- Building
- School
- Church
- Dam

HYDROLOGY:

- Stream or Body of Water
- Hydro, Pool or Reservoir
- Jurisdictional Stream — JS
- Buffer Zone 1 — BZ 1
- Buffer Zone 2 — BZ 2
- Flow Arrow
- Disappearing Stream
- Spring
- Wetland
- Proposed Lateral, Tail, Head Ditch — FLOW
- False Sump

RAILROADS:

- Standard Gauge — CSX TRANSPORTATION
- RR Signal Milepost — MILEPOST 35
- Switch — SWITCH
- RR Abandoned
- RR Dismantled

RIGHT OF WAY:

- Baseline Control Point
- Existing Right of Way Marker
- Existing Right of Way Line
- Proposed Right of Way Line — RW
- Proposed Right of Way Line with Iron Pin and Cap Marker — RW
- Proposed Right of Way Line with Concrete or Granite R/W Marker — RW
- Proposed Control of Access Line with Concrete C/A Marker — CA
- Existing Control of Access — CA
- Proposed Control of Access — CA
- Existing Easement Line — E
- Proposed Temporary Construction Easement — E
- Proposed Temporary Drainage Easement — TDE
- Proposed Permanent Drainage Easement — PDE
- Proposed Permanent Drainage / Utility Easement — DUE
- Proposed Permanent Utility Easement — PUE
- Proposed Temporary Utility Easement — TUE
- Proposed Aerial Utility Easement — AUE
- Proposed Permanent Easement with Iron Pin and Cap Marker

ROADS AND RELATED FEATURES:

- Existing Edge of Pavement
- Existing Curb
- Proposed Slope Stakes Cut — C
- Proposed Slope Stakes Fill — F
- Proposed Curb Ramp — CR
- Existing Metal Guardrail
- Proposed Guardrail
- Existing Cable Guiderail
- Proposed Cable Guiderail
- Equality Symbol
- Pavement Removal

VEGETATION:

- Single Tree
- Single Shrub
- Hedge
- Woods Line
- Orchard
- Vineyard — Vineyard

EXISTING STRUCTURES:

MAJOR:

- Bridge, Tunnel or Box Culvert — CONC
- Bridge Wing Wall, Head Wall and End Wall — CONC WW

MINOR:

- Head and End Wall — CONC HW
- Pipe Culvert
- Footbridge
- Drainage Box: Catch Basin, DI or JB — CB
- Paved Ditch Gutter
- Storm Sewer Manhole — S
- Storm Sewer — S

UTILITIES:

POWER:

- Existing Power Pole
- Proposed Power Pole
- Existing Joint Use Pole
- Proposed Joint Use Pole
- Power Manhole — P
- Power Line Tower
- Power Transformer
- U/G Power Cable Hand Hole
- H-Frame Pole
- Recorded U/G Power Line — P
- Designated U/G Power Line (S.U.E.*) — P

TELEPHONE:

- Existing Telephone Pole
- Proposed Telephone Pole
- Telephone Manhole — T
- Telephone Booth
- Telephone Pedestal — T
- Telephone Cell Tower
- U/G Telephone Cable Hand Hole
- Recorded U/G Telephone Cable — T
- Designated U/G Telephone Cable (S.U.E.*) — T
- Recorded U/G Telephone Conduit — TC
- Designated U/G Telephone Conduit (S.U.E.*) — TC
- Recorded U/G Fiber Optics Cable — T FO
- Designated U/G Fiber Optics Cable (S.U.E.*) — T FO

WATER:

- Water Manhole — W
- Water Meter
- Water Valve
- Water Hydrant
- Recorded U/G Water Line
- Designated U/G Water Line (S.U.E.*)
- Above Ground Water Line — A/G Water

TV:

- TV Satellite Dish
- TV Pedestal — C
- TV Tower
- U/G TV Cable Hand Hole — HH
- Recorded U/G TV Cable — TV
- Designated U/G TV Cable (S.U.E.*) — TV
- Recorded U/G Fiber Optic Cable — TV FO
- Designated U/G Fiber Optic Cable (S.U.E.*) — TV FO

GAS:

- Gas Valve
- Gas Meter
- Recorded U/G Gas Line — G
- Designated U/G Gas Line (S.U.E.*) — G
- Above Ground Gas Line — A/G Gas

SANITARY SEWER:

- Sanitary Sewer Manhole
- Sanitary Sewer Cleanout
- U/G Sanitary Sewer Line — SS
- Above Ground Sanitary Sewer — A/G Sanitary Sewer
- Recorded SS Forced Main Line — FSS
- Designated SS Forced Main Line (S.U.E.*) — FSS

MISCELLANEOUS:

- Utility Pole
- Utility Pole with Base
- Utility Located Object
- Utility Traffic Signal Box — S
- Utility Unknown U/G Line — ?UTL
- U/G Tank; Water, Gas, Oil
- Underground Storage Tank, Approx. Loc. — UST
- A/G Tank; Water, Gas, Oil
- Geoenvironmental Boring
- U/G Test Hole (S.U.E.*)
- Abandoned According to Utility Records — AATUR
- End of Information — E.O.I.

SURVEY CONTROL SHEET BD–5108AD

SEPI ENGINEERING & CONSTRUCTION
1025 Wade Avenue
Raleigh, NC 27605
Tel:919-789-9977
Fax:919-789-9591
License: C-2197

PROJECT REFERENCE NO.	SHEET NO.
BD-5108AD	1-C
R/W SHEET NO.	

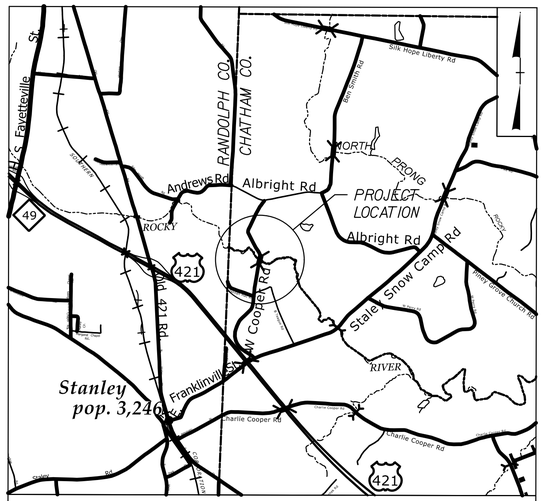

VICINITY MAP

-L- ALIGNMENT						
Point	BL Point	North	East	Elevation	Station	Offset
BL-101	BL-101	751,622.91′	1,840,166.64′	650.90′	OUTSIDE PROJECT LIMITS	
BL-102	BL-102	753,890.86′	1,840,242.64′	638.68′	12+76.97	-9.92′
BL-103	BL-103	752,181.03′	1,840,189.87′	640.91′	15+82.11	-20.15′

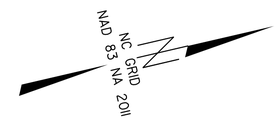

–L– STA. 10+00.00 BEGIN STATE PROJECT BD–5108AD
LOCALIZED PROJECT COORDINATES
N = 751,620.81' ***E = 1,840,182.30'***

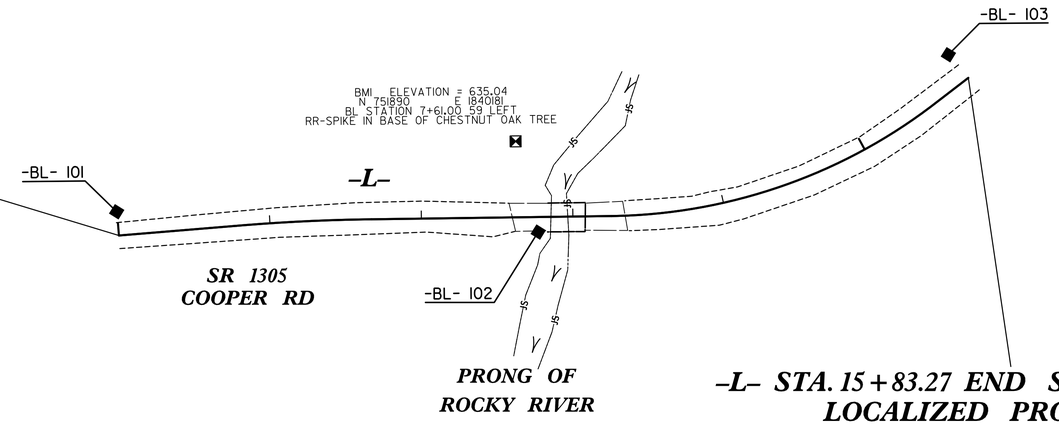

–L– STA. 15+83.27 END STATE PROJECT BD–5108AD
LOCALIZED PROJECT COORDINATES
N = 752,190.44' ***E = 1,840,207.72'***

DATUM DESCRIPTION

THE LOCALIZED COORDINATE SYSTEM DEVELOPED FOR THIS PROJECT IS BASED ON THE STATE PLANE COORDINATES ESTABLISHED BY NCDOT FOR MONUMENT "BD5108AD-1"
WITH NAD 83/NA 2011 STATE PLANE GRID COORDINATES OF
NORTHING: 753008.1030(ft) EASTING: 1839734.3800(ft)
ELEVATION: 660.275(ft)
THE AVERAGE COMBINED GRID FACTOR USED ON THIS PROJECT (GROUND TO GRID) IS: 0.9998945201
THE N.C. LAMBERT GRID BEARING AND LOCALIZED HORIZONTAL GROUND DISTANCE FROM "BD5108AD-1" TO -L- STATION 10+00.00 IS 1457.8076′
S17°53′38.45″E
ALL LINEAR DIMENSIONS ARE LOCALIZED HORIZONTAL DISTANCES
VERTICAL DATUM USED IS NAVD 88

NOTES:

1. *THE CONTROL DATA FOR THIS PROJECT WAS PROVIDED BY NCDOT.*
   CONTROL POINTS PROVIDED ARE AS FOLLOWS:
   BD5108AD–1 N=753,008.1030 E=1,839,734.3800 ELEV=660.275'

   SITE CALIBRATION INFORMATION HAS NOT BEEN PROVIDED FOR THIS PROJECT. IF FURTHER INFORMATION IS NEEDED, PLEASE CONTACT THE LOCATION AND SURVEYS UNIT.

⬢ *INDICATES GEODETIC CONTROL MONUMENTS USED OR SET FOR HORIZONTAL PROJECT CONTROL BY THE NCDOT LOCATION AND SURVEYS UNIT.*

◆ *INDICATES CONTROL MONUMENTS USED OR SET FOR HORIZONTAL PROJECT CONTROL BY NCDOT.*

NOTE: DRAWING NOT TO SCALE

REVISIONS 8/17/99

SYSTIME$$$$ SYSDATE$$$$ DGN$$$$ FILENAME$$$$

SEPI ENGINEERING & CONSTRUCTION
1025 Wade Avenue
Raleigh, NC 27605
Tel:919-789-9977
Fax:919-789-9591
License: C-2197

PROJECT REFERENCE NO.	SHEET NO.
BD-5108AD	2
ROADWAY DESIGN ENGINEER	PAVEMENT DESIGN ENGINEER

NORTH CAROLINA PROFESSIONAL SEAL 028112 ENGINEER JONESZKA I. NAVARRO
04-07-14

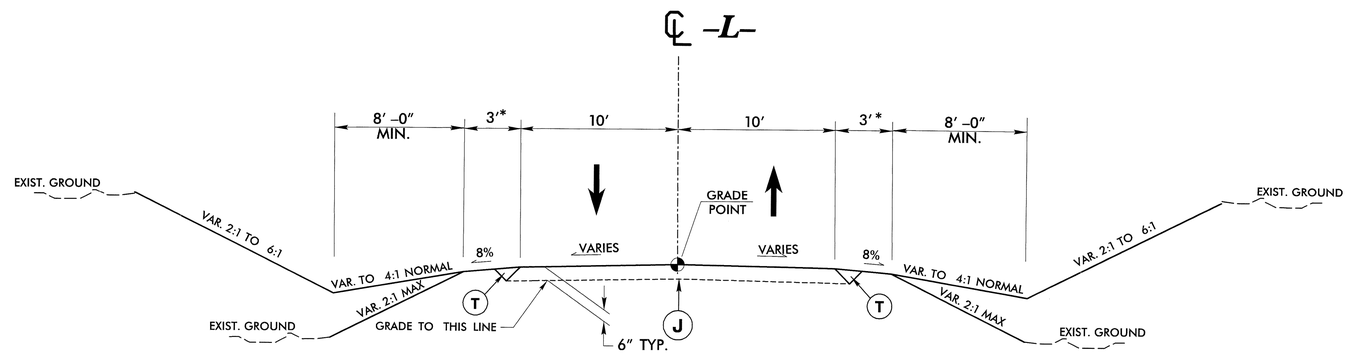

* ADD 3' TO SHOULDERS FOR GUARDRAIL

TYPICAL SECTION NO. 1

-L- STA. 10+65.00 TO 14+95.00

PAVEMENT SCHEDULE	
T	EARTH MATERIAL.
J	PROP. VAR. DEPTH AGGREGATE BASE COURSE.

NOTE: PAVEMENT EDGE SLOPES ARE 1:1 UNLESS SHOWN OTHERWISE

6/2/99
$$$$$SYSTIME$$$$
$$$$$DGN$$$$$$$$$$$$$$$$$$$$
$$$$$DLNAME$$$

PROJECT REFERENCE NO.	SHEET NO.
BD-5108AD	2-A

RIP RAP PROTECTION DETAIL

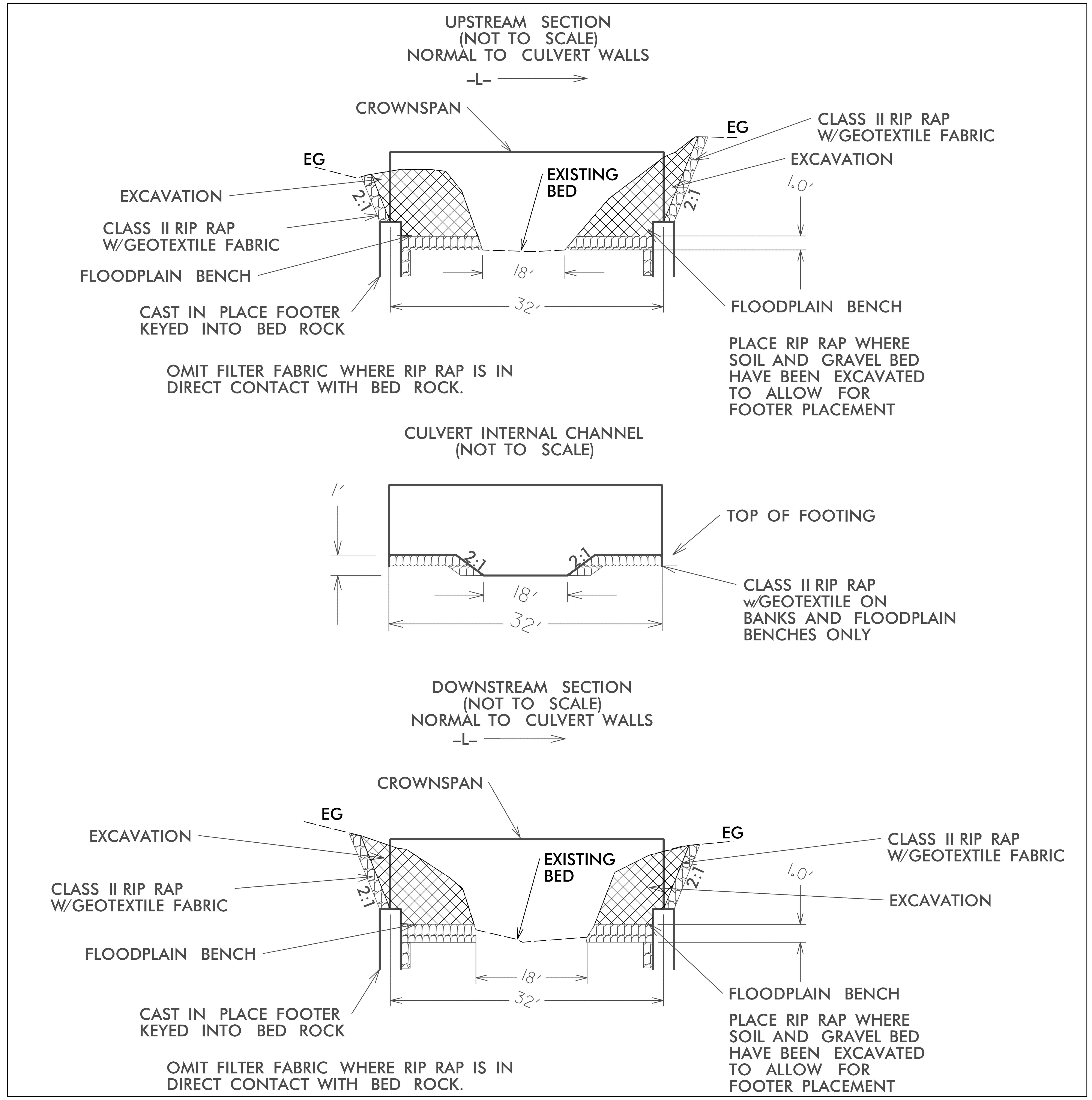

8/17/99

$$$$$$SYSTIME$$$$$
$$$$$$$$$$$$$$$DGN$$$$$$$$$$$$$$$$$$$$
$$$$USERNAME$$$$

ITEM NUMBER	SECTION NUMBER	DESCRIPTION	QUANTITY	UNIT
0000100000-N	800	MOBILIZATION	1	LS
0000400000-N	801	CONSTRUCTION SURVEYING	1	LS
0043000000-N	226	GRADING	1	LS
0050000000-E	226	SUPPLEMENTARY CLEARING & GRUBBING	1	ACR
1121000000-E	520	AGGREGATE BASE COURSE	370	TON
1220000000-E	545	INCIDENTAL STONE	100	TON
2000000000-N	806	RIGHT OF WAY MARKERS	8	EA
3030000000-E	862	STEEL BM GUARDRAIL	75	LF
3150000000-N	862	ADDITIONAL GUARDRAIL POSTS	5	EA
3270000000-N	SP	GUARDRAIL ANCHOR UNITS, TYPE 350	4	EA
3628000000-E	876	RIP RAP, CLASS I	220	TON
3635000000-E	876	RIP RAP, CLASS II	90	TON
3656000000-E	876	GEOTEXTILE FOR DRAINAGE	790	SY
4457000000-N	SP	TEMPORARY TRAFFIC CONTROL	1	LS
6000000000-E	1605	TEMPORARY SILT FENCE	485	LF
6006000000-E	1610	STONE FOR EROSION CONTROL, CLASS A	65	TON
6009000000-E	1610	STONE FOR EROSION CONTROL, CLASS B	500	TON
6012000000-E	1610	SEDIMENT CONTROL STONE	165	TON
6015000000-E	1615	TEMPORARY MULCHING	0.5	ACR
6018000000-E	1620	SEED FOR TEMPORARY SEEDING	100	LB
6021000000-E	1620	FERTILIZER FOR TEMPORARY SEEDING	0.5	TON
6024000000-E	1622	TEMPORARY SLOPE DRAINS	200	LF
6029000000-E	SP	SAFETY FENCE	100	LF
6030000000-E	1630	SILT EXCAVATION	520	CY
6036000000-E	1631	MATTING FOR EROSION CONTROL	6,465	SY
6037000000-E	SP	COIR FIBER MAT	100	SY
6038000000-E	SP	PERMANENT SOIL REINFORCEMENT MAT	395	SY
6045000000-E	SP	*** TEMPORARY PIPE (36")	60	LF
6070000000-N	1639	SPECIAL STILLIN BASIN	2	EA
6071012000-E	SP	COIR FIBER WATTLE	125	LF
6071020000-E	SP	POLYACRYLAMIDE (PAM)	55	LB
6084000000-E	1660	SEEDING AND MULCHING	0.5	ACR
6087000000-E	1660	MOWING	0.5	ACR
6090000000-E	1661	SEED FOR REPAIR SEEDING	50	LB
6093000000-E	1661	FERTILIZER FOR REPAIR SEEDING	0.25	TON
6096000000-E	1662	SEED FOR SUPPLEMENTAL SEEDING	50	LB
6108000000-E	1665	FERTILIZER TOPDRESSING	0.25	TON
6111000000-E	SP	IMPERVIOUS DIKE	336	LF
6114500000-N	1667	SPECIALIZED HAND MOWING	10	MHR
6117000000-N	SP	RESPONSE FOR EROSION CONTROL	13	EA

ITEM NUMBER	SECTION NUMBER	DESCRIPTION	QUANTITY	UNIT
8035000000-N	402	REM OF EX STRUCTURE AT STATION 12+90.00 -L-	1	LS
8121000000-N	412	UNCLASSIFIED STRUCTURE EXCAVATION AT STATION 13+06.00 -L-	1	LS
8196000000-E	420	CLASS A CONCRETE (CULVERT)	72	CY
8804000000-N	SP	PRECAST REINFORCED CONCRETE THREE SIDED CULVERT, 12+90.00	1	LS

6/21/00
$$$$$$SYSTIME$$$$$$
$$$$$$DGN$$$$$$
$$$$$$DSRNAME$$$$$$

5/14/99

SEPI ENGINEERING & CONSTRUCTION
1025 Wade Avenue
Raleigh, NC 27605
Tel:919-789-9977
Fax:919-789-9591
License: C-2197

PROJECT REFERENCE NO.	SHEET NO.
BD-5108AD	3-A
R/W SHEET NO.	

STATE OF NORTH CAROLINA
DIVISION OF HIGHWAYS

SUMMARY OF EARTHWORK IN CUBIC YARDS

LOCATION	UNCLASSIFIED EXCAVATION	UNDERCUT	EMBT+%	BORROW	WASTE
-L- STA. 10+65.00 TO 14+95.00	376		410	34	
SUBTOTAL	376		410	34	
TOTAL	376		410	34	
LOSS DUE TO CLEAR & GRUB.					
WASTE IN LEU OF BORROW					
PROJECT TOTAL	376		410	34	
EST. 5% TO REPLACE TOP SOIL ON BORROW PIT				2	
GRAND TOTAL	376		410	36	
SAY	380				

NOTE: Approximate quantities only. Unclassified Excavation, Fine Grading, Clearing and Grubbing, and Removal of Existing Pavement will be paid for at the contract lump sum price for "Grading."

"N" = DISTANCE FROM EDGE OF LANE TO FACE OF GUARDRAIL.
TOTAL SHOULDER WIDTH = DISTANCE FROM EDGE OF TRAVEL LANE TO SHOULDER BREAK POINT.
FLARE LENGTH = DISTANCE FROM LAST SECTION OF PARALLEL GUARDRAIL TO END OF GUARDRAIL.
W = TOTAL WIDTH OF FLARE FROM BEGINNING OF TAPER TO END OF GUARDRAIL.
G = GATING IMPACT ATTENUATOR TYPE 350
NG = NON-GATING IMPACT ATTENUATOR TYPE 350

GUARDRAIL SUMMARY

SURVEY LINE	BEGINNING STATION	END STATION	LOCATION	LENGTH			WARRENT POINT		"N" DIST. FROM E.O.L.	TOTAL SHOULDER WIDTH	FLARE LENGTH		W		ANCHORS			REMARKS
				STRAIGHT	SHOP CURVED	DOUBLE FACED	APPROACH END	TRAILING END			APPROACH END	TRAILING END	APPROACH END	TRAILING END	GRAU-350	AT-1	TYPE III	
-L-	12+26	13+62	RT	137.50'					3'-0"	6'-0"					1			
-L-	13+65	12+26	LT	137.50'					3'-0"	6'-0"					1			
									3'-0"	6'-0"					1			
									3'-0"	6'-0"					1			
SUBTOTAL				275.00'														
LESS ANCHOR DEDUCTIONS																		
GRAU-350 4 @ 50' =				-200.00'														
			TOTAL	75.00'			ADDITIONAL GUARDRAIL POSTS - 5 EA											
			SAY	75.00'											4			

DATE: 5/14/99
USER NAME: bmcleod
DGN FILE: ...

PROJECT REFERENCE NO.	SHEET NO.
BD-5108AD	4
R/W SHEET NO.	

ROADWAY DESIGN ENGINEER — NORTH CAROLINA PROFESSIONAL SEAL 026012 ENGINEER JOHN E. KAI — 04-07-14

HYDRAULICS ENGINEER — NORTH CAROLINA PROFESSIONAL SEAL 032624 ENGINEER ANDREW M. HOWELL — 4-7-14

SEPI ENGINEERING & CONSTRUCTION
1025 Wade Avenue
Raleigh, NC 27605
Tel:919-789-9977
Fax:919-789-9591
License: C-2197

DETAIL A
SPECIAL CUT DITCH
(Not to Scale)

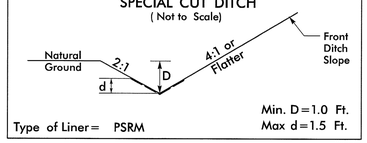

FROM STA. 10+25 TO STA. 10+75 –L– LT
FROM STA. 10+25 TO STA 10+75 –L– RT
FROM STA. 14+75 TO STA. 15+50 –L– LT
FROM STA. 14+75 TO STA. 15+50 –L– RT

DETAIL B
CUT DITCH
(Not to Scale)

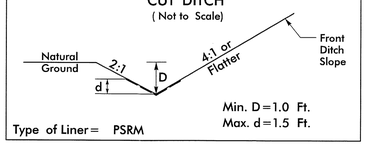

FROM STA. 10+75 TO STA. 11+75 –L– LT
FROM STA. 10+75 TO STA. 11+75 –L– RT
FROM STA. 14+50 TO STA. 14+75 –L– LT
FROM STA. 14+50 TO STA. 14+75 –L– RT

DETAIL C
SPECIAL CUT DITCH
(Not to Scale)

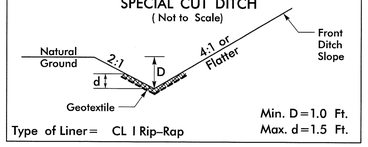

FROM STA. 11+75 TO STA. 12+50 –L– LT
FROM STA. 11+75 TO STA. 12+50 –L– RT
FROM STA. 13+20 TO STA. 13+75 –L– LT
FROM STA. 13+05 TO STA. 13+50 –L– RT

DETAIL D
SPECIAL CUT DITCH
(Not to Scale)

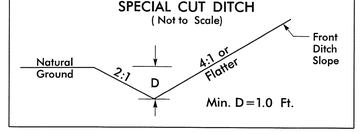

FROM STA. 13+75 TO STA. 14+50 –L– LT
FROM STA. 13+50 TO STA 14+50 –L– RT

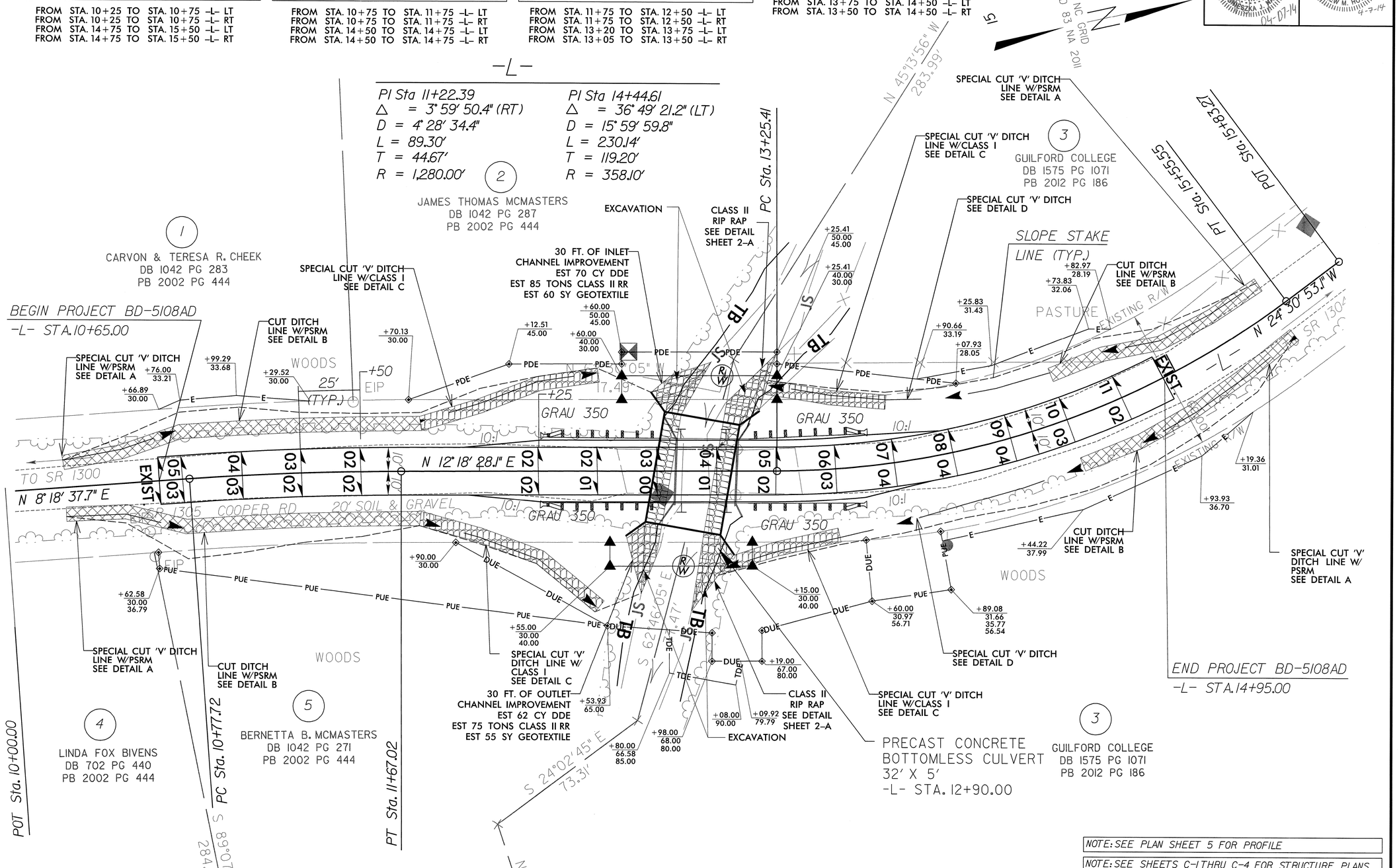

NOTE: SEE PLAN SHEET 5 FOR PROFILE

NOTE: SEE SHEETS C-1 THRU C-4 FOR STRUCTURE PLANS

REVISIONS

8/17/99

PROJECT REFERENCE NO.	SHEET NO.
BD-5108AD	5

ROADWAY DESIGN ENGINEER — NORTH CAROLINA PROFESSIONAL ENGINEER SEAL 029712 — 04-07-14

HYDRAULICS ENGINEER — NORTH CAROLINA PROFESSIONAL ENGINEER SEAL 035621 — ANDREW M. HOWELL — 4-7-14

BM 1
Sta. -BL- 7+61.00
OFF 59' LT
ELEV. 635.04'
RR SPIKE IN BASE
OF CHESTNUT OAK

-L-
Sta. 12+62.85
OFF 50.12' LT

CULVERT HYDRAULIC DATA

DESIGN DISCHARGE	=	550	CFS
DESIGN FREQUENCY	=	5	YRS
DESIGN HW ELEVATION	=	637.4	FT
BASE DISCHARGE	=	2,501	CFS
BASE FREQUENCY	=	100	YRS
BASE HW ELEVATION	=	641.16	FT
OVERTOPPING DISCHARGE	=	1,300	CFS
OVERTOPPING FREQUENCY	=	10 +/-	YRS
OVERTOPPING ELEVATION	=	638.5	FT

-L-

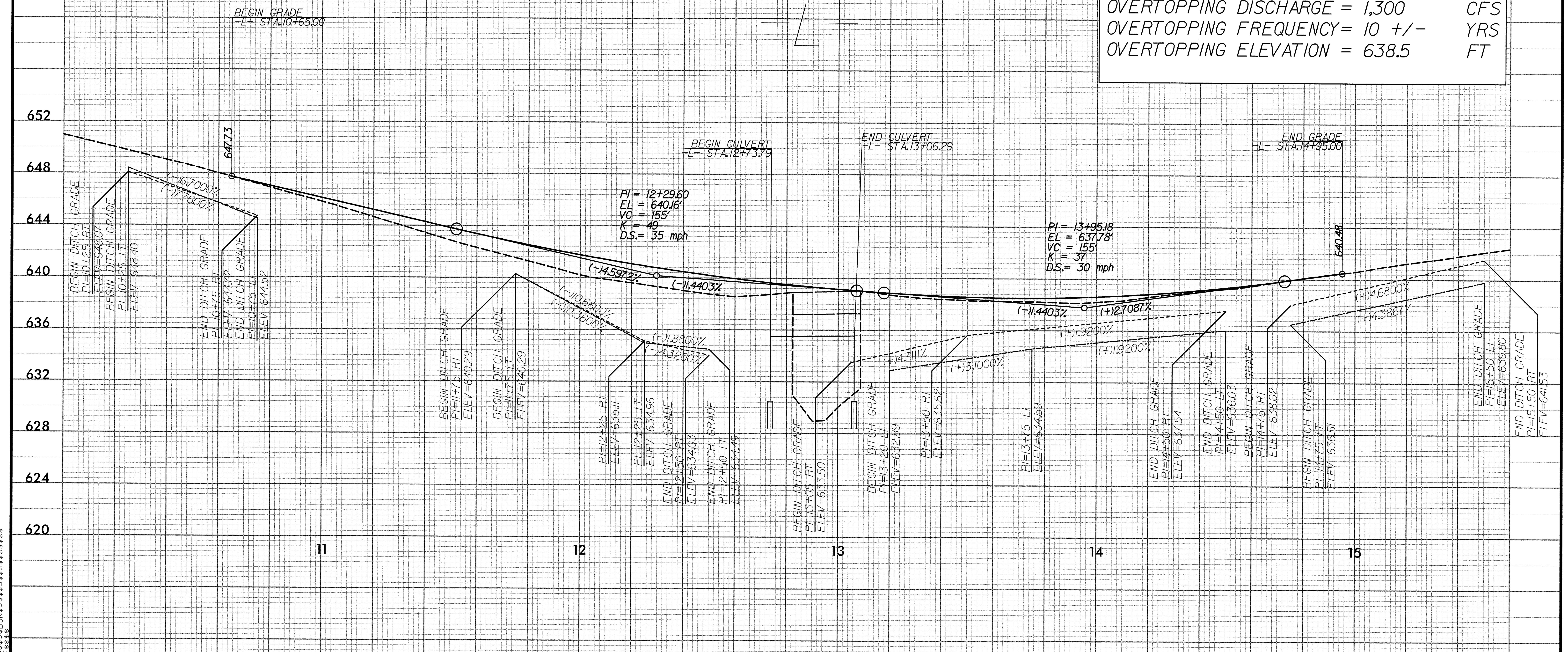

NOTE: SEE PLAN SHEET 4 FOR PLAN
NOTE: SEE SHEETS C-1 THRU C-4 FOR STRUCTURE PLANS

5/14/99
$$$$SYSTIME$$$$ $$$$$$$$$$DGN$$$$$$$$$$$$$$$$$$$$$$$$$$$$$$$$ $$$$USERNAME$$$$

STATE OF NORTH CAROLINA
DIVISION OF HIGHWAYS

TRANSPORTATION MANAGEMENT PLAN

CHATHAM COUNTY

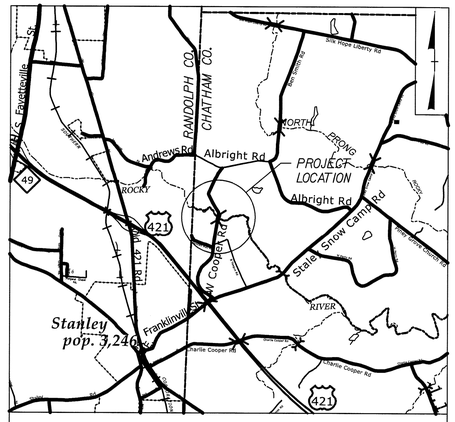

VICINITY MAP

LOCATION: BRIDGE NO. 287 ON SR 1305 (COOPER ROAD) OVER PRONG OF ROCKY RIVER

TYPE OF WORK: GRADING, DRAINAGE, PAVING, & STRUCTURE

INDEX OF SHEETS

SHEET NO.	TITLE
TMP-1	TITLE SHEET, VICINITY MAP, AND INDEX OF SHEETS
TMP-2	TRANSPORTATION OPERATIONS PLAN: (APPLICABLE ROADWAY STANDARD DRAWINGS, MANAGEMENT STRATEGIES, GENERAL NOTES, LOCAL NOTES, AND PHASING)

SHEET NO.
TMP-1

BD-5108AD

PROJECT:

WORK ZONE SAFETY & MOBILITY
"from the MOUNTAINS to the COAST"

N.C.D.O.T. WORK ZONE TRAFFIC CONTROL
1561 MAIL SERVICE CENTER (MSC) RALEIGH, NC 27699-1561
750 N. GREENFIELD PARKWAY, GARNER, NC 27529 (DELIVERY)
PHONE: (919) 773-2800 FAX: (919) 771-2745

J. S. BOURNE, P.E. — STATE TRAFFIC MANAGEMENT ENGINEER
J. ISHAK, P.E. — TRAFFIC CONTROL PROJECT ENGINEER
_____ — TRAFFIC CONTROL PROJECT DESIGN ENGINEER
_____ — TRAFFIC CONTROL DESIGN ENGINEER

DIVISION OF HIGHWAYS · STATE OF NORTH CAROLINA · DEPARTMENT OF TRANSPORTATION · WORK ZONE TRAFFIC CONTROL

SEPI ENGINEERING & CONSTRUCTION
1025 Wade Avenue
Raleigh, NC 27605
Tel:919-789-9977
Fax:919-789-9591
License: C-2197

APPROVED: _____
DATE: 4-3-14

SEAL

NORTH CAROLINA PROFESSIONAL SEAL 037026 ENGINEER STEVEN D. MILLER

$$$$$$SYSTIME$$$$$
$$$$$$$$$$$$$$$$DGN$$$$$$$$$$$$$$$$$
$$$$USERNAME$$$$

PROJ. REFERENCE NO.	SHEET NO.
BD-5108AD	TMP-2

ROADWAY STANDARD DRAWINGS

THE FOLLOWING ROADWAY STANDARDS AS SHOWN IN "ROADWAY STANDARD DRAWINGS" - PROJECT SERVICES UNIT - N.C. DEPARTMENT OF TRANSPORTATION - RALEIGH, N.C., DATED JANUARY 2012 ARE APPLICABLE TO THIS PROJECT AND BY REFERENCE HEREBY ARE CONSIDERED A PART OF THESE PLANS:

STD. NO.	TITLE
1101.03	TEMPORARY ROAD CLOSURES
1101.05	WORK ZONE VEHICLE ACCESSES
1101.11	TRAFFIC CONTROL DESIGN TABLES
1110.01	STATIONARY WORK ZONE SIGNS
1145.01	BARRICADES-TYPE III

MANAGEMENT STRATEGIES

-SR 1305 (COOPER ROAD) WILL BE CLOSED FOR BRIDGE REPLACEMENT CONSTRUCTION

-LOCAL ACCESS TO ALL RESIDENCES AND BUSINESSES WILL BE MAINTAINED BETWEEN CLOSURE POINTS AT ALL TIMES DURING CONSTRUCTION

GENERAL NOTES

CHANGES MAY BE REQUIRED WHEN PHYSICAL DIMENSIONS IN THE DETAIL DRAWINGS, STANDARD DETAILS, AND ROADWAY DETAILS ARE NOT ATTAINABLE TO MEET FIELD CONDITIONS OR RESULT IN DUPLICATE OR UNDESIRED OVERLAPPING OF DEVICES. MODIFICATION MAY INCLUDE: MOVING, SUPPLEMENTING, COVERING, OR REMOVAL OF DEVICES AS DIRECTED BY THE ENGINEER.

THE FOLLOWING GENERAL NOTES APPLY AT ALL TIMES FOR THE DURATION OF THE CONSTRUCTION PROJECT EXCEPT WHEN OTHERWISE NOTED IN THE PLAN OR DIRECTED BY THE ENGINEER.

SIGNING

A) PROVIDE SIGNING AND DEVICES REQUIRED TO CLOSE THE ROAD ACCORDING TO THE ROADWAY STANDARD DRAWINGS AND TRAFFIC MANAGEMENT PLANS.

B) COVER OR REMOVE ALL SIGNS AND DEVICES REQUIRED TO CLOSE THE ROAD WHEN ROAD CLOSURE IS NOT IN OPERATION.

C) ENSURE ALL NECESSARY SIGNING IS IN PLACE PRIOR TO ALTERING ANY TRAFFIC PATTERN.

LOCAL NOTES

1. NOTIFY THE ENGINEER AT LEAST ONE MONTH PRIOR TO ANY TRAFFIC PATTERN ALTERATION.
2. NOTIFY CHATHAM COUNTY SCHOOLS AT LEAST ONE MONTH PRIOR TO ROAD CLOSURE.
3. NOTIFY CHATHAM COUNTY EMERGENCY SERVICES AT LEAST ONE MONTH PRIOR TO ROAD CLOSURE.

PHASING

STEP 1 USING RSD 1101.03 SHEET 1 OF 9, CLOSE COOPER ROAD (SR 1305). MAINTAIN ACCESS TO ALL RESIDENCES AND BUSINESSES BETWEEN CLOSURE POINTS.

STEP 2 REMOVE THE EXISTING STRUCTURE.

STEP 3 CONSTRUCT THE PROPOSED STRUCTURE AND ROADWAY.

STEP 4 OPEN COOPER ROAD (SR 1305) TO TRAFFIC AND REMOVE ALL TRAFFIC CONTROL DEVICES.

APPROVED: DATE: 9-3-14

SEAL

NORTH CAROLINA PROFESSIONAL SEAL 037026 ENGINEER STEVEN D. MILLER

DIVISION OF HIGHWAYS STATE OF NORTH CAROLINA DEPARTMENT OF TRANSPORTATION WORK ZONE TRAFFIC CONTROL

TRANSPORTATION OPERATIONS PLAN

$$$$$$SYSTIME$$$$$$
$$$$$$$$$$$$$$$$DGN$$$$$$$$$$$$$$$$$$
$$$$$USERNAME$$$$

TIP PROJECT: BD-5108 AD

STATE	STATE PROJECT REFERENCE NO.	SHEET NO.	TOTAL SHEETS
N.C.	BD-5108AD	EC-1	5

STATE PROJ. NO.	F. A. PROJ. NO.	DESCRIPTION
45354.1.31		PE
45354.1.31		R/W & CONST.

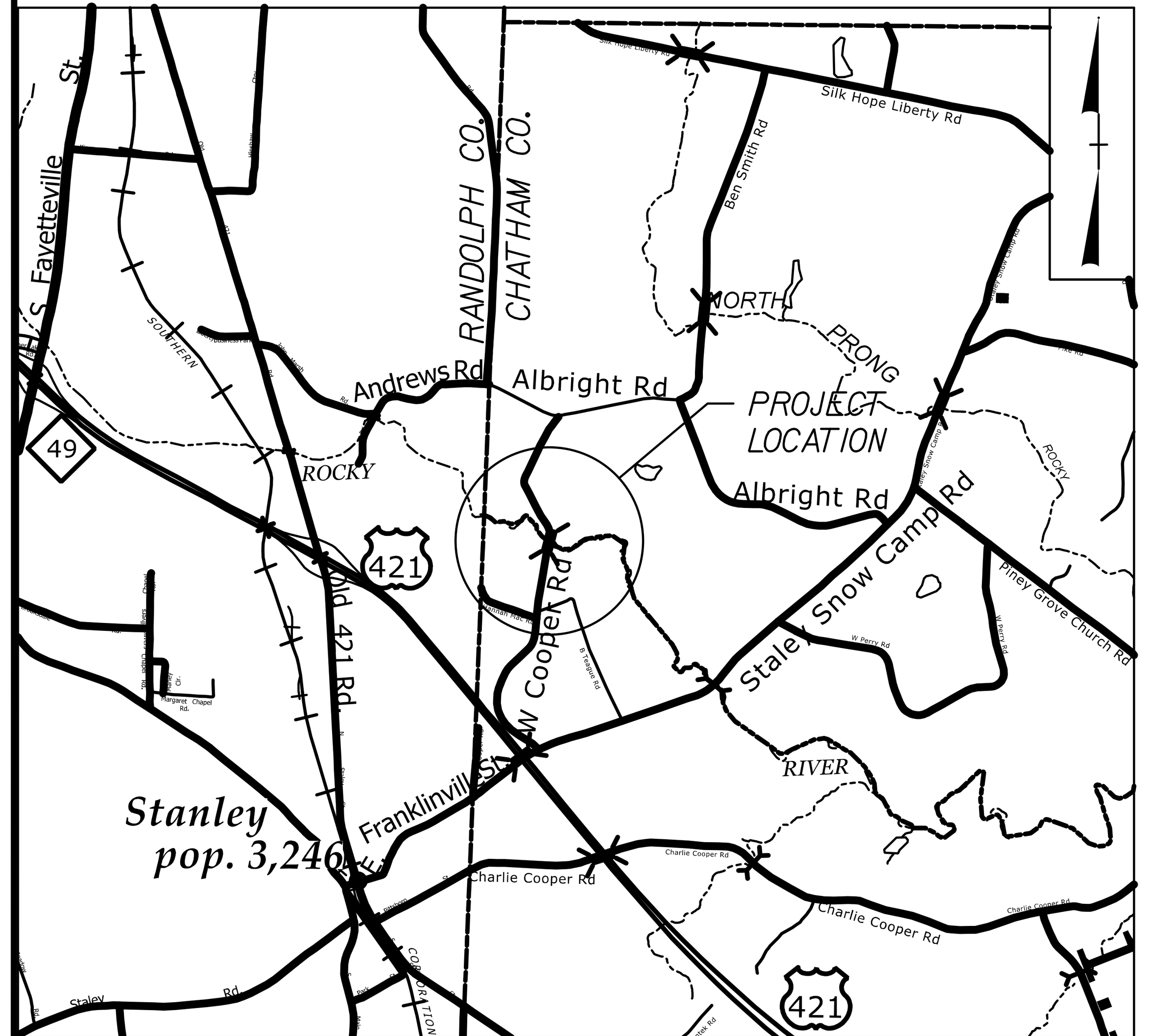

VICINITY MAP

STATE OF NORTH CAROLINA
DIVISION OF HIGHWAYS
CHATHAM COUNTY

LOCATION: BRIDGE NO. 287 ON SR 1305 (COOPER ROAD) OVER PRONG OF ROCKY RIVER

TYPE OF WORK: GRADING, DRAINAGE, PAVING, & STRUCTURE

PLAN FOR PROPOSED
HIGHWAY EROSION CONTROL

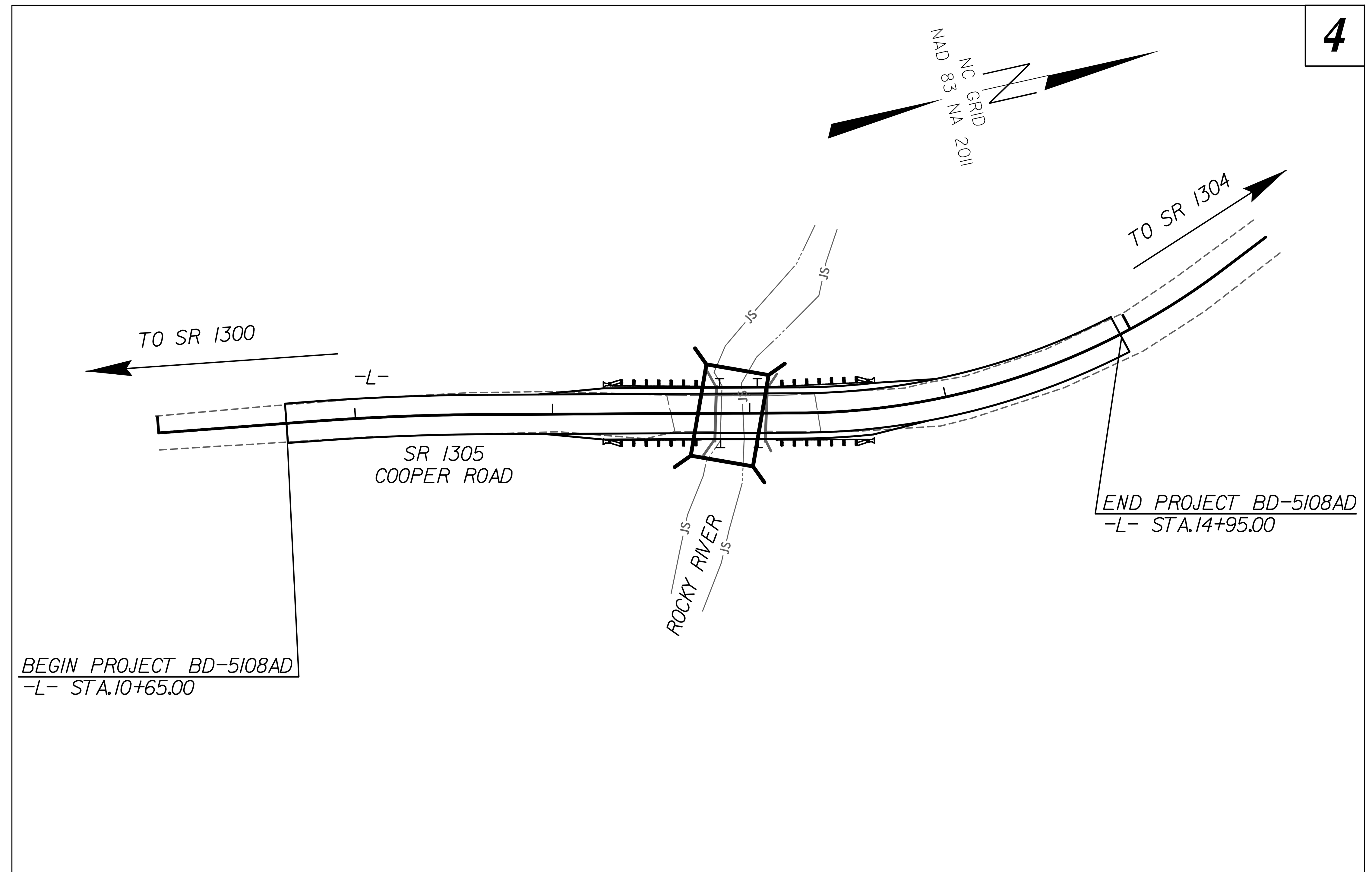

EROSION AND SEDIMENT CONTROL MEASURES

Std. #	Description	Symbol
1630.03	Temporary Silt Ditch	
1630.05	Temporary Diversion	
1605.01	Temporary Silt Fence	
1606.01	Special Sediment Control Fence	
1622.01	Temporary Berms and Slope Drains	
1630.02	Silt Basin Type B	
1633.01	Temporary Rock Silt Check Type-A	
	Temporary Rock Silt Check Type-A with Matting and Polyacrylamide (PAM)	
1633.02	Temporary Rock Silt Check Type-B	
	Wattle/Coir Fiber Wattle	
	Wattle/Coir Fiber Wattle with Polyacrylamide (PAM)	
1634.01	Temporary Rock Sediment Dam Type-A	
1634.02	Temporary Rock Sediment Dam Type-B	
1635.01	Rock Pipe Inlet Sediment Trap Type-A	
1635.02	Rock Pipe Inlet Sediment Trap Type-B	
1630.04	Stilling Basin	
1630.06	Special Stilling Basin	
	Rock Inlet Sediment Trap:	
1632.01	Type A	A
1632.02	Type B	B
1632.03	Type C	C
	Skimmer Basin	
	Tiered Skimmer Basin	
	Infiltration Basin	

THIS PROJECT CONTAINS EROSION CONTROL PLANS FOR CLEARING AND GRUBBING PHASE OF CONSTRUCTION.

GRAPHIC SCALE

15' 0 30'

PLANS

ROADSIDE ENVIRONMENTAL UNIT
DIVISION OF HIGHWAYS
STATE OF NORTH CAROLINA

ANDREW M. HOWELL, P.E.
LEVEL III DESIGNER OF EROSION AND SEDIMENT CONTROL PLANS
3105
LEVEL III CERTIFICATION NO.

THESE EROSION AND SEDIMENT CONTROL PLANS COMPLY WITH THE REGULATIONS SET FORTH BY THE NCG-010000 GENERAL CONSTRUCTION PERMIT EFFECTIVE AUGUST 3, 2011 ISSUED BY THE NORTH CAROLINA DEPARTMENT OF ENVIRONMENT AND NATURAL RESOURCES DIVISION OF WATER QUALITY.

Prepared In the Office of:

SEPI ENGINEERING & CONSTRUCTION

1025 Wade Avenue
Raleigh, NC 27605
Tel:919-789-9977
Fax:919-789-9591
License: C-2197

2012 STANDARD SPECIFICATIONS

Roadway Standard Drawings

The following roadway english standards as appear in "Roadway Standard Drawings"– Roadway Design Unit – N. C. Department of Transportation – Raleigh, N. C., dated January 2012 and the latest revison thereto are applicable to this project and by reference hereby are considered a part of these plans.

1604.01	Railroad Erosion Control Detail	1632.01	Rock Inlet Sediment Trap Type A
1605.01	Temporary Silt Fence	1632.02	Rock Inlet Sediment Trap Type B
1606.01	Special Sediment Control Fence	1632.03	Rock Inlet Sediment Trap Type C
1607.01	Gravel Construction Entrance	1633.01	Temporary Rock Silt Check Type A
1622.01	Temporary Berms and Slope Drains	1633.02	Temporary Rock Silt Check Type B
1630.01	Riser Basin	1634.01	Temporary Rock Sediment Dam Type A
1630.02	Silt Basin Type B	1634.02	Temporary Rock Sediment Dam Type B
1630.03	Temporary Silt Ditch	1635.01	Rock Pipe Inlet Sediment Trap Type A
1630.04	Stilling Basin	1635.02	Rock Pipe Inlet Sediment Trap Type B
1630.05	Temporary Diversion	1640.01	Coir Fiber Baffle
1630.06	Special Stilling Basin	1645.01	Temporary Stream Crossing
1631.01	Matting Installation		

PROJECT REFERENCE NO.	SHEET NO.
BD-5108AD	EC-2

TEMPORARY ROCK SILT CHECK TYPE 'A' WITH EXCELSIOR MATTING AND POLYACRYLAMIDE (PAM)

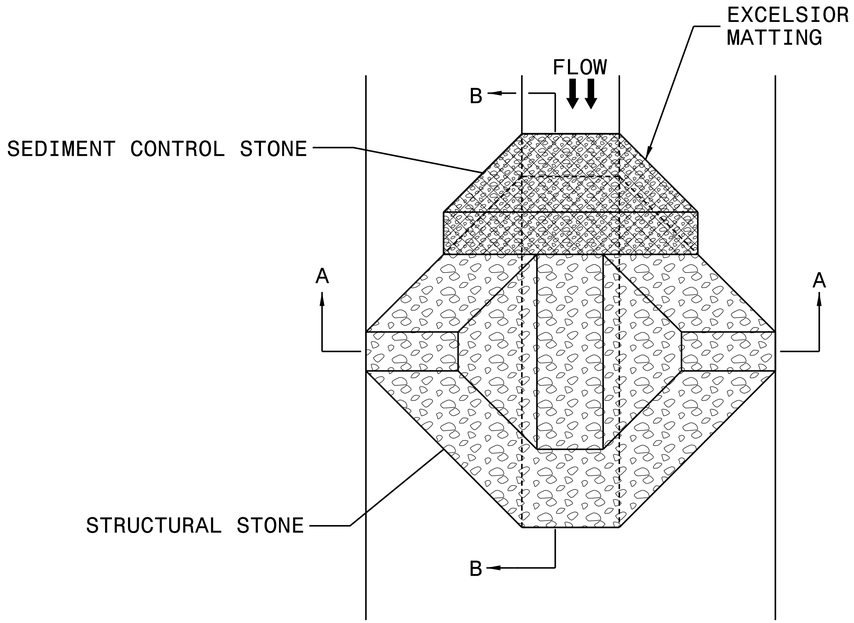

PLAN

NOTES:

INSTALL TEMPORARY ROCK SILT CHECK TYPE A IN ACCORDANCE WITH ROADWAY STANDARD DRAWING NO. 1633.01.

USE EXCELSIOR FOR MATTING MATERIAL AND ANCHOR MATTING SECTION AT TOP AND BOTTOM WITH CLASS B STONE.

PRIOR TO POLYACRYLAMIDE (PAM) APPLICATION, OBTAIN A SOIL SAMPLE FROM PROJECT LOCATION, AND FROM OFFSITE MATERIAL, AND ANALYZE FOR APPROPRIATE PAM FLOCCULANT TO BE APPLIED TO EACH ROCK SILT CHECK.

INITIALLY APPLY 4 OUNCES OF POLYACRYLAMIDE (PAM) TO TOP OF MATTING SECTION AND AFTER EVERY RAINFALL EVENT THAT EQUALS OR EXCEEDS 0.50 INCHES.

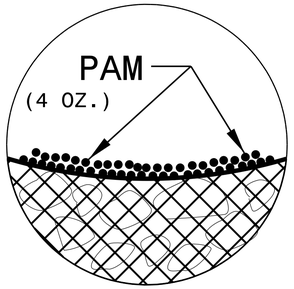

INSET A

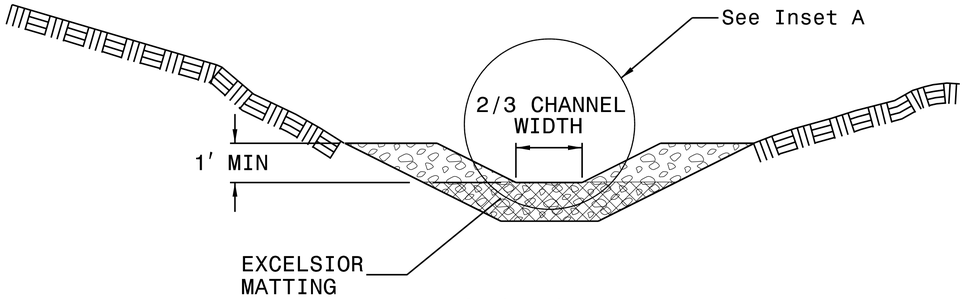

SECTION A-A

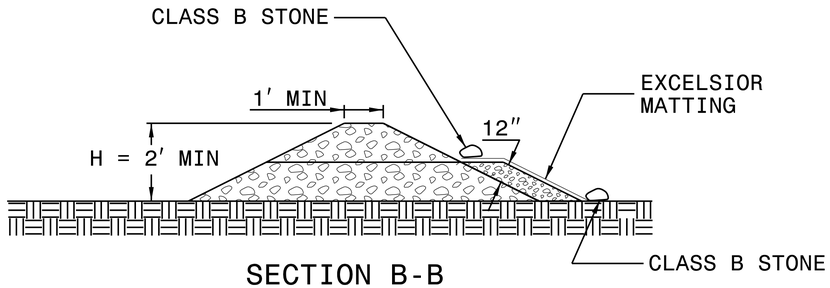

SECTION B-B

NOT TO SCALE

PROJECT REFERENCE NO.	SHEET NO.
BD-5108AD	EC-3

DIVISION OF HIGHWAYS
STATE OF NORTH CAROLINA

SOIL STABILIZATION SUMMARY SHEET

MATTING FOR EROSION CONTROL

CONST SHEET NO.	LINE	FROM STATION	TO STATION	SIDE	ESTIMATE (SY)
4	-L-	13+75	14+50	LT	50
4	-L-	13+50	14+50	RT	75
			SUBTOTAL		125
MISCELLANEOUS MATTING TO BE INSTALLED AS DIRECTED BY THE ENGINEER					0
				TOTAL	125
				SAY	138

PERMANENT SOIL REINFORCEMENT MAT

CONST SHEET NO.	LINE	FROM STATION	TO STATION	SIDE	ESTIMATE (SY)
4	-L-	10+25	11+75	LT	120
4	-L-	14+50	15+50	LT	75
4	-L-	10+25	11+75	RT	120
4	-L-	14+50	15+50	RT	80
			SUBTOTAL		395
		ADDITIONAL PSRM TO BE INSTALLED			0
				TOTAL	395
				SAY	435

PROJECT REFERENCE NO.	SHEET NO.
BD-5108AD	EC-3A

DIVISION OF HIGHWAYS
STATE OF NORTH CAROLINA

SOIL STABILIZATION TIMEFRAMES

SITE DESCRIPTION	STABILIZATION TIME	TIMEFRAME EXCEPTIONS
PERIMETER DIKES, SWALES, DITCHES AND SLOPES	7 DAYS	NONE
HIGH QUALITY WATER (HQW) ZONES	7 DAYS	NONE
SLOPES STEEPER THAN 3:1	7 DAYS	IF SLOPES ARE 10' OR LESS IN LENGTH AND ARE NOT STEEPER THAN 2:1, 14 DAYS ARE ALLOWED.
SLOPES 3:1 OR FLATTER	14 DAYS	7 DAYS FOR SLOPES GREATER THAN 50' IN LENGTH.
ALL OTHER AREAS WITH SLOPES FLATTER THAN 4:1	14 DAYS	NONE, EXCEPT FOR PERIMETERS AND HQW ZONES.

PROJECT REFERENCE NO.	SHEET NO.
BD-5108AD	EC-4/CONST.4

SEPI ENGINEERING & CONSTRUCTION

1025 Wade Avenue
Raleigh, NC 27605
Tel:919-789-9977
Fax:919-789-9591
License: C-2197

30′ 0′ 60′

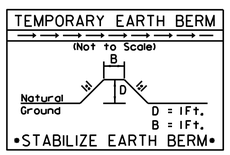

FROM STA. 12+25 TO STA. 12+50 –L– LT
FROM STA. 12+25 TO STA. 12+50 –L– RT

NOTE:
PLACE TEMPORARY ROCK SILT CHECKS TYP – A AT DRAINAGE OUTLETS.

CLEARING AND GRUBBING EROSION CONTROL FOR CONSTRUCTION SHEET 4

CULVERT CONSTRUCTION SEQUENCE FROM STA. 12+74 TO STA. 13+06 –L–

1. ESTABLISH OFFSITE DETOUR.
2. INSTALL CLEARING AND GRUBBING PERIMETER CONTROLS. DO NOT CLEAR BEYONE PERIMETER CONTROLS.
3. INSTALL SPECIAL STILLING BASIN IN THE APPROXIMATE LOCATION SHOWN ON THE PLANS.
4. INSTALL 36″ TEMPORARY PIPE AND IMPERVIOUS DIKES #1 AND #2 A MINIMUM 1.0′ ABOVE TOP OF BANK AS SHOWN ON THE PLANS.
5. DEWATER THE AREA UNDER THE EXISTING BRIDGE, DIRECTING PUMPED WATER TO THE SPECIAL STILLING BASIN.
6. REMOVE EXISTING BRIDGE STRUCTURE, BACKWALLS, WINGWALLS AND MUD SILLS.
7. TEMPORARILY STABILIZE THE EXISTING STREAM BANKS WITH CLASS 'II' RIP RAP.
8. REMOVE 36″ TEMPORARY PIPE AND IMPERVIOUS DIKES #1 AND #2.
9. INSTALL IMPERVIOUS DIKES #3 AND #4, MAINTAINING THE WATERCOURSE THROUGH THE PROPOSED CULVERT AS SHOWN ON THE PLANS.
10. DEWATER THE WORK AREA(S) BEHIND IMPERVIOUS DIKE(S), DIRECTING PUMPED WATER TO THE SPECIAL STILLING BASIN.
11. CONSTRUCT BOTTOMLESS CULVERT FOOTERS AND RIP RAP PROTECTION AS SHOWN ON THE PLANS.
12. CONSTRUCT CHANNEL IMPROVEMENTS AS SHOWN ON THE PLANS.
13. REMOVE IMPERVIOUS DIKE(S), AND MAKE ANY NECESSARY REPAIRS TO INTERNAL CHANNEL AND TRANSITION AREAS.
14. PLACE AND GROUT PRECAST CROWNSPAN SECTIONS ACCORDING TO THE PROJECT PLANS AND DETAILS.
15. PLACE FILL OVER THE STRUCTURE ACCORDING TO THE PROJECT PLANS AND DETAILS.
16. CONSTRUCT THE ROADWAY AND INSTALL FINAL EROSION CONTROL ITEMS AS SHOWN ON THE PLANS.
17. STABILIZE THE ENTIRE ROADWAY PROJECT SITE WITHIN THE PERIMTER EROSION CONTROL ITEMS.
18. REMOVE ALL FINAL PHASE EROSION CONTROL ITEMS WITHIN THE PERIMETER EROSION CONTROL ITEMS.
19. MAKE REPAIRS AS NECESSARY AND STABILIZE THE PROJECT SITE.
20. REMOVE PERIMETER EROSION CONTROL ITEMS.
21. RETURN TRAFFIC TO THE COMPLETED PROJECT AREA, PENDING FINAL INSPECTION AND APPROVAL.

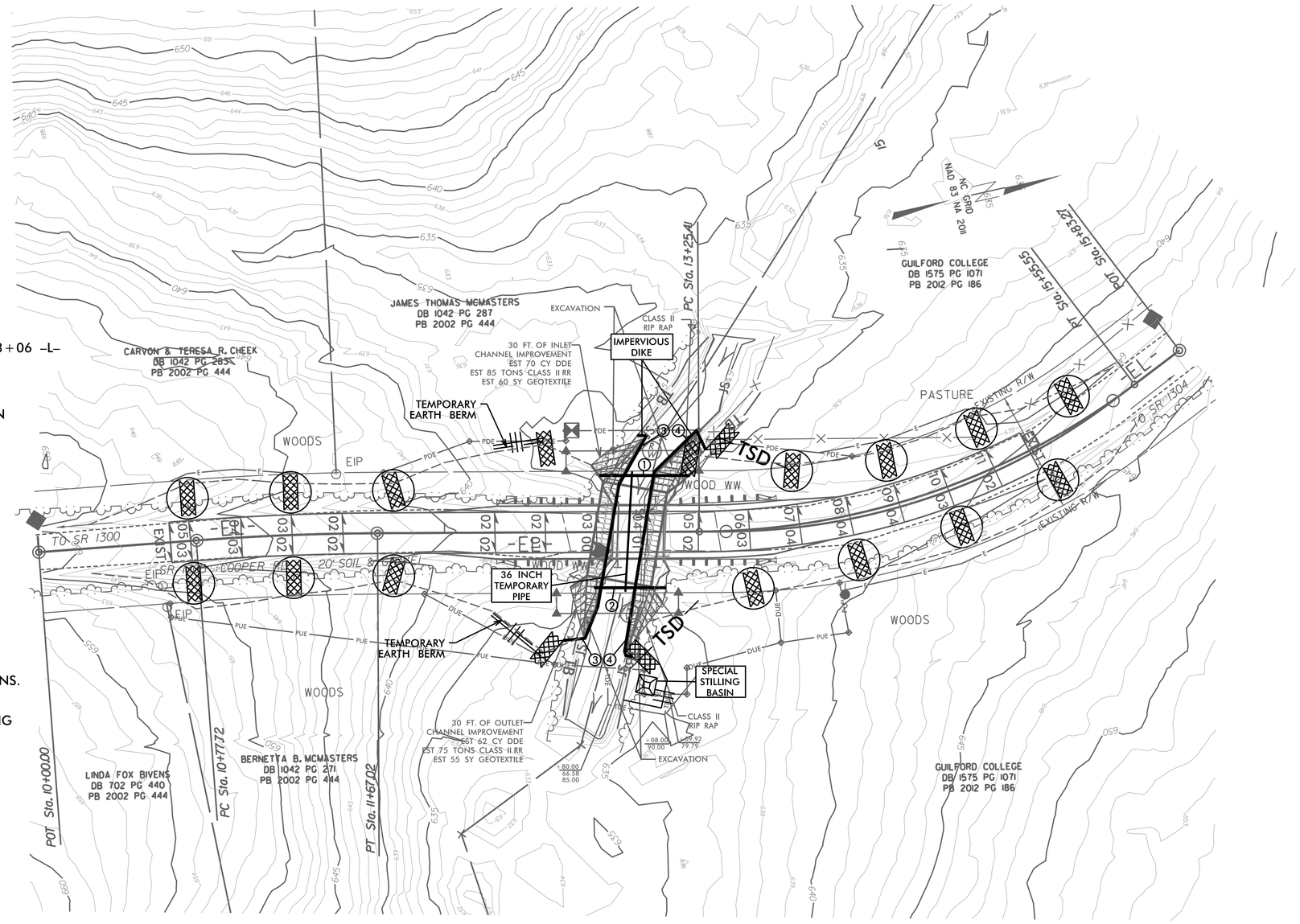

PROJECT REFERENCE NO.	SHEET NO.
BD-5108AD	EC-5/CONST.4

SEPI ENGINEERING & CONSTRUCTION

1025 Wade Avenue
Raleigh, NC 27605
Tel:919-789-9977
Fax:919-789-9591
License: C-2197

30' 0' 60'

EXCAVATION

TEMPORARY EARTH BERM
(Not to Scale)
Natural Ground
B
D
1:1
D = 1Ft.
B = 1Ft.
•STABILIZE EARTH BERM•

FROM STA. 12+25 TO STA. 12+50 -L- LT
FROM STA. 12+25 TO STA. 12+50 -L- RT

DETAIL A
SPECIAL CUT DITCH
(Not to Scale)
Natural Ground
2:1
D
d
4:1 or Flatter
Front Ditch Slope
Min. D=1.0 Ft.
Max d=1.5 Ft.
Type of Liner= PSRM

FROM STA. 10+25 TO STA. 10+75 -L- LT
FROM STA. 10+25 TO STA. 10+75 -L- RT
FROM STA. 14+75 TO STA. 15+50 -L- LT
FROM STA. 14+75 TO STA. 15+50 -L- RT

DETAIL B
CUT DITCH
(Not to Scale)
Natural Ground
2:1
D
d
4:1 or Flatter
Front Ditch Slope
Min. D=1.0 Ft.
Max. d=1.5 Ft.
Type of Liner= PSRM

FROM STA. 10+75 TO STA. 11+75 -L- LT
FROM STA. 10+75 TO STA. 11+75 -L- RT
FROM STA. 14+50 TO STA. 14+75 -L- LT
FROM STA. 14+50 TO STA. 14+75 -L- RT

DETAIL C
SPECIAL CUT DITCH
(Not to Scale)
Natural Ground
2:1
D
d
Geotextile
4:1 or Flatter
Front Ditch Slope
Min. D=1.0 Ft.
Max. d=1.5 Ft.
Type of Liner= CL I Rip-Rap

FROM STA. 11+75 TO STA. 12+50 -L- LT
FROM STA. 11+75 TO STA. 12+50 -L- RT
FROM STA. 13+20 TO STA. 13+75 -L- LT
FROM STA. 13+05 TO STA. 13+50 -L- RT

DETAIL D
SPECIAL CUT DITCH
(Not to Scale)
Natural Ground
2:1
D
4:1 or Flatter
Front Ditch Slope
Min. D=1.0 Ft.

FROM STA. 13+75 TO STA. 14+50 -L- LT
FROM STA. 13+50 TO STA. 14+50 -L- RT

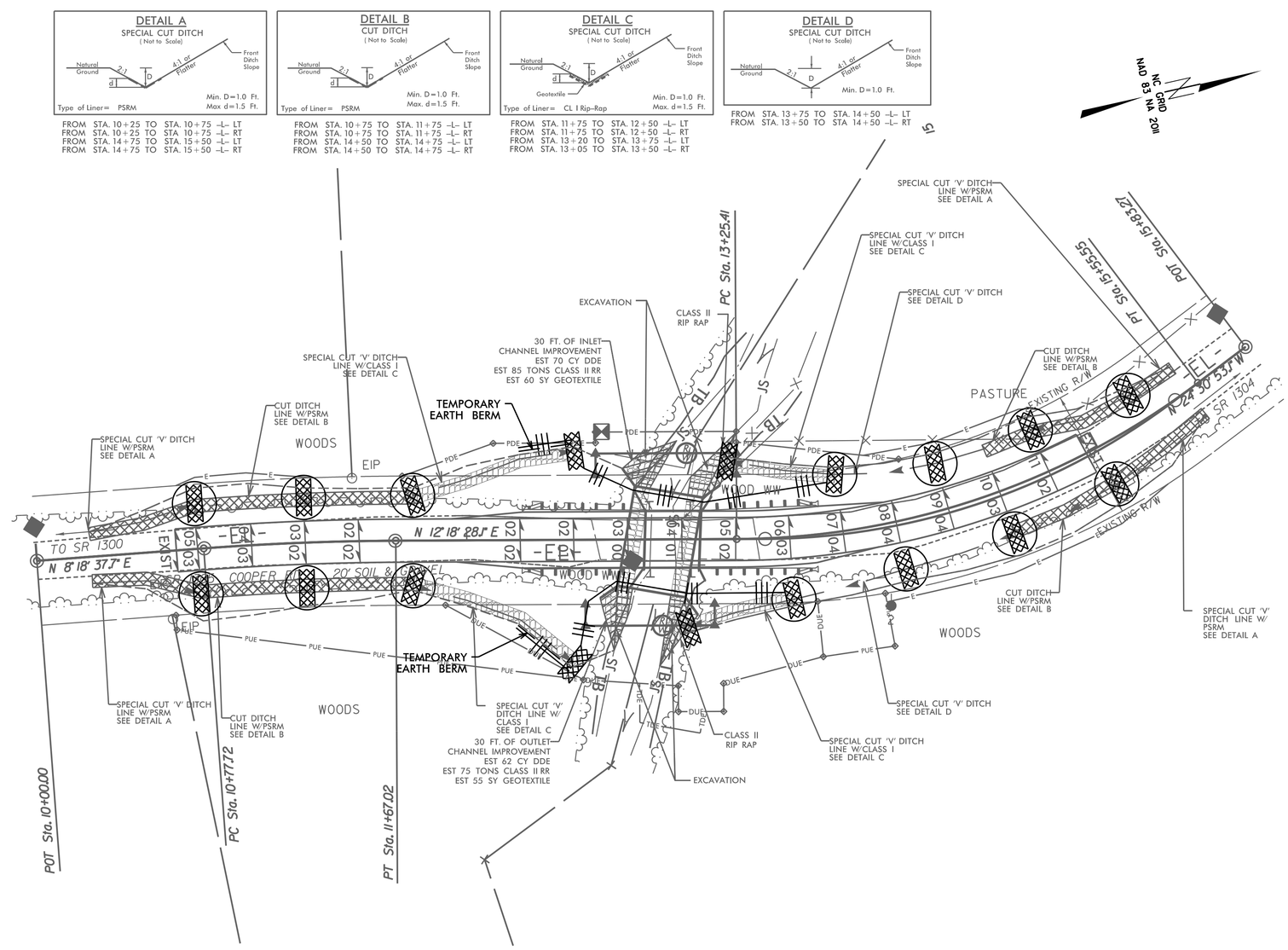

PROJECT REFERENCE NO.	SHEET NO.
BD-5108AD	X-1

CROSS SECTION INDEX

X-1 CROSS SECTION INDEX

X-2 THRU X-7 -L-

8/17/99
$$$$SYSTIME$$$$
$$$$DGN$$$$
$$$$FRAME$$$$

PROJ. REFERENCE NO.	SHEET NO.
BD-5108AD	X-2

0 2.5 5

SEPI ENGINEERING & CONSTRUCTION
1025 Wade Avenue
Raleigh, NC 27605
Tel:919-789-9977
Fax:919-789-9591
License: C-2197

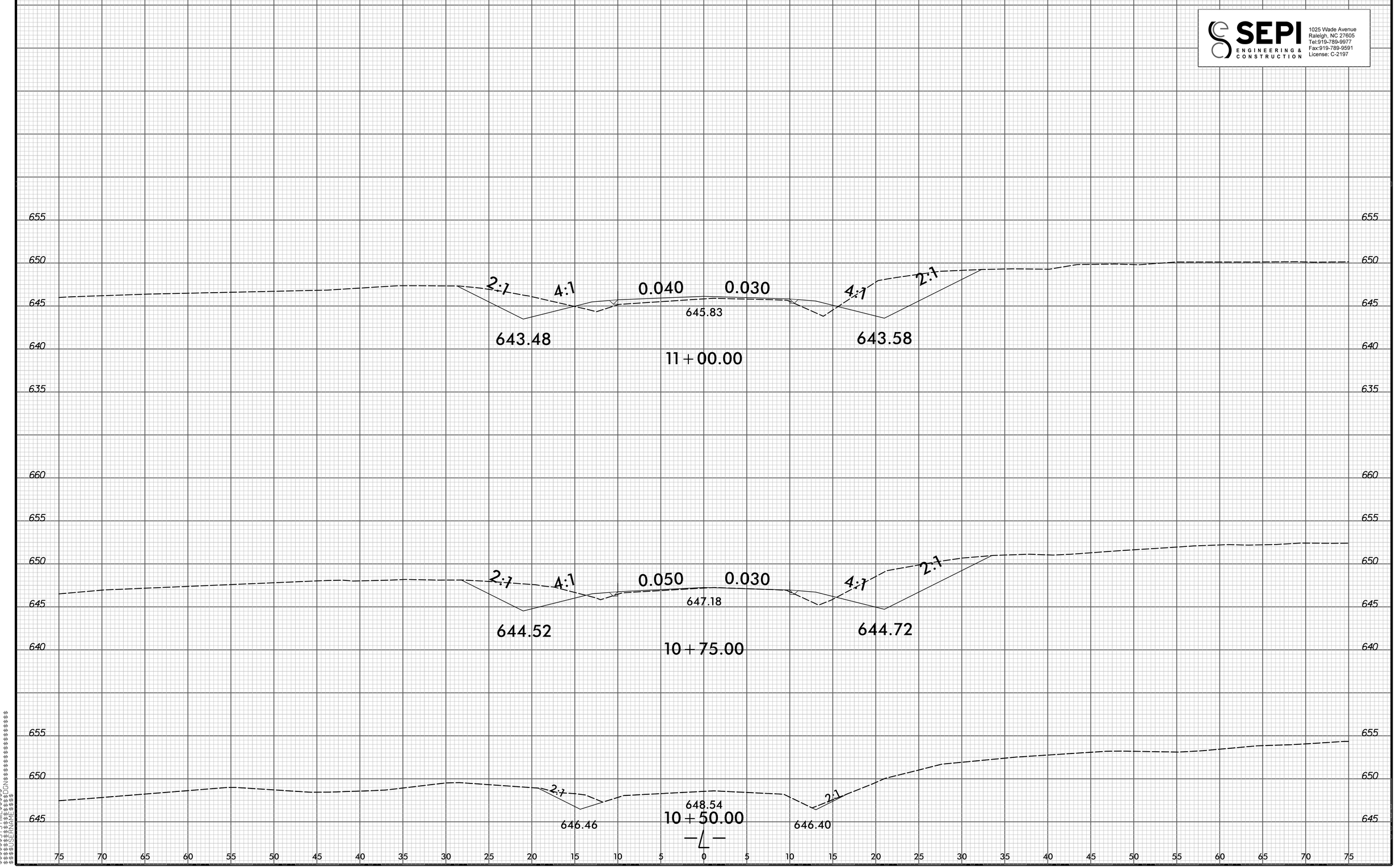

8/23/99
$$$$SYSTIME$$$$
$$$$DGN$$$$
$$$$USERNAME$$$$

8/23/99

0 2.5 5	PROJ. REFERENCE NO.	SHEET NO.
	BD-5108AD	X-3

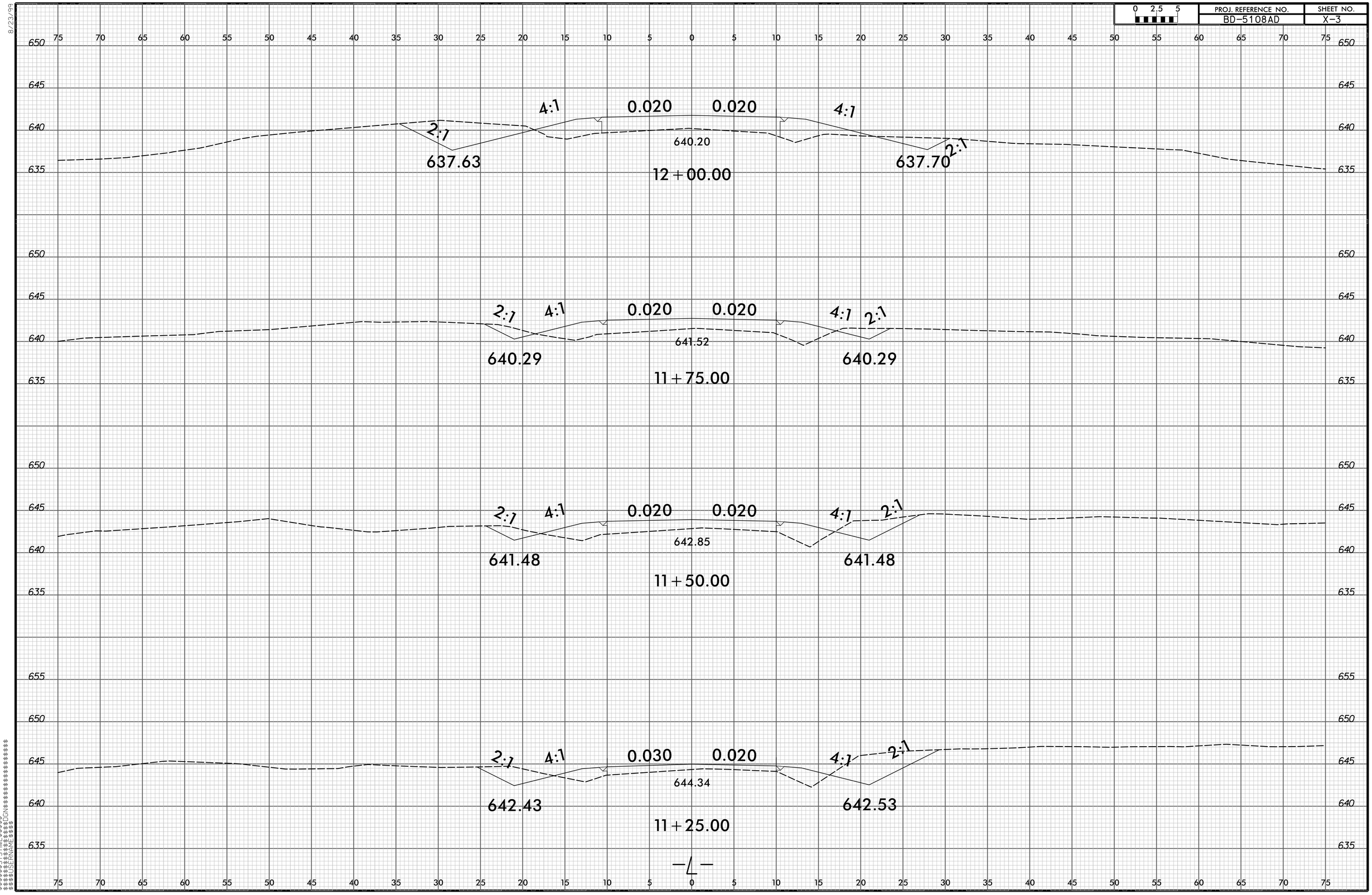

$$$$SYSTIME$$$$
$$$$SYSNAME$$$$
$$$$DGN$$$$
$$$$USERNAME$$$$

8/23/99

0 2.5 5	PROJ. REFERENCE NO.	SHEET NO.
	BD-5108AD	X-4

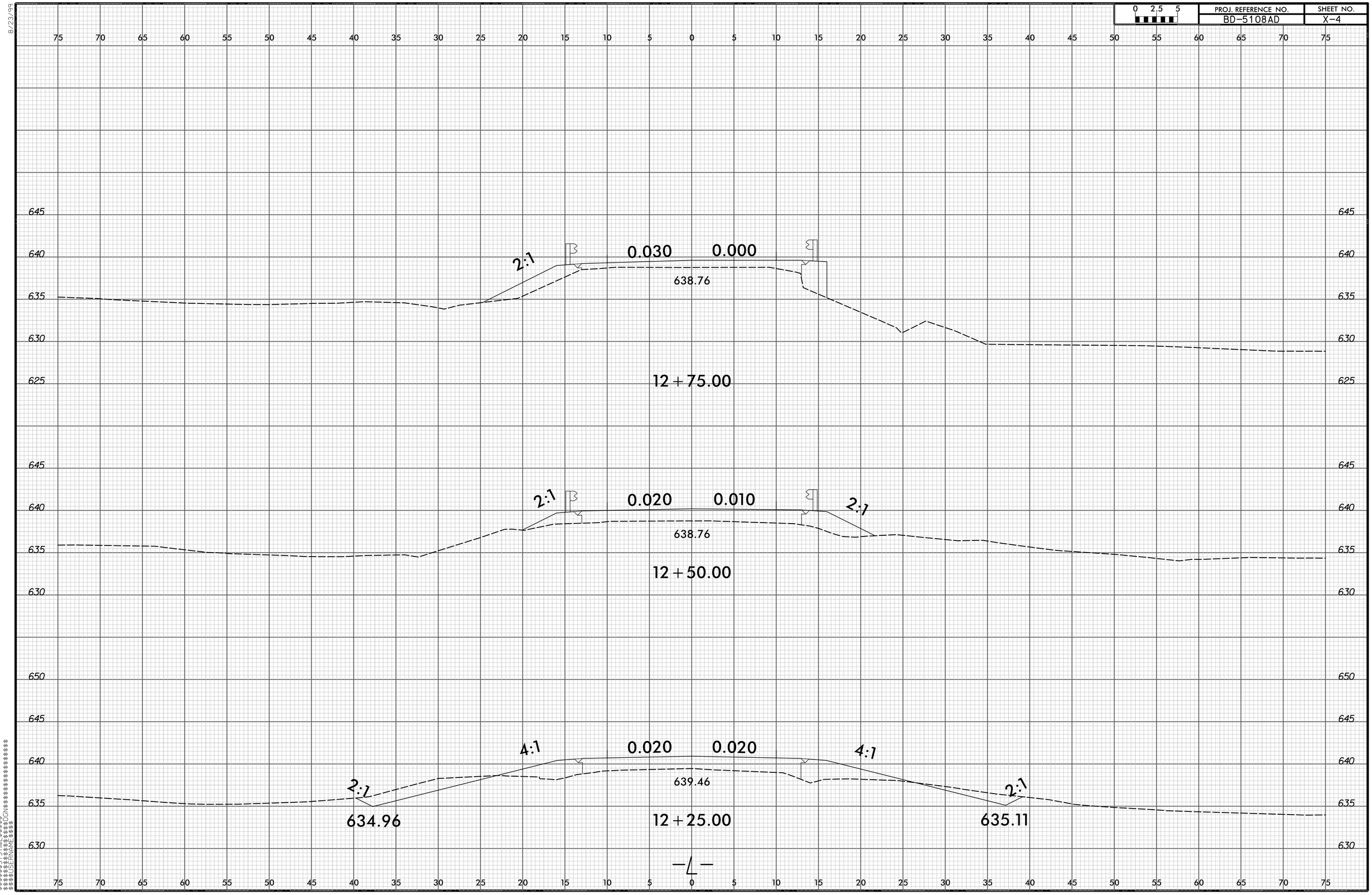

$$$$CSYTIME$$$$
$$$$DGNNAME$$$$
$$$$USERNAME$$$$

8/23/99

0 2.5 5	PROJ. REFERENCE NO.	SHEET NO.
	BD-5108AD	X-5

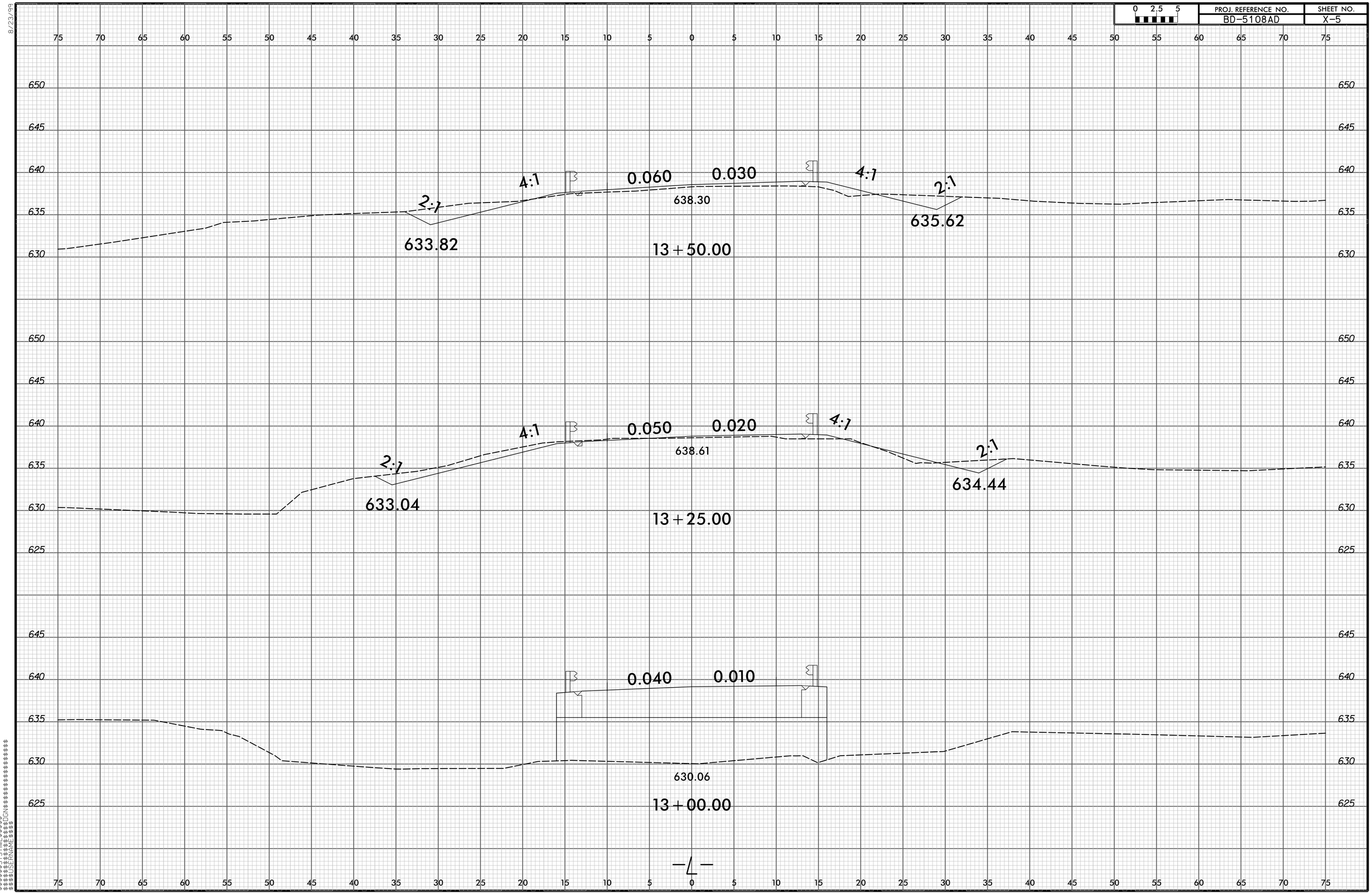

$$$$$$SYSTIME$$$$$$
$$$$$$SYSTIME$$$$$$
$$$$$$DGN$$$$$$
$$$$$$USERNAME$$$$$$

8/23/99

0 2.5 5	PROJ. REFERENCE NO.	SHEET NO.
	BD-5108AD	X-6

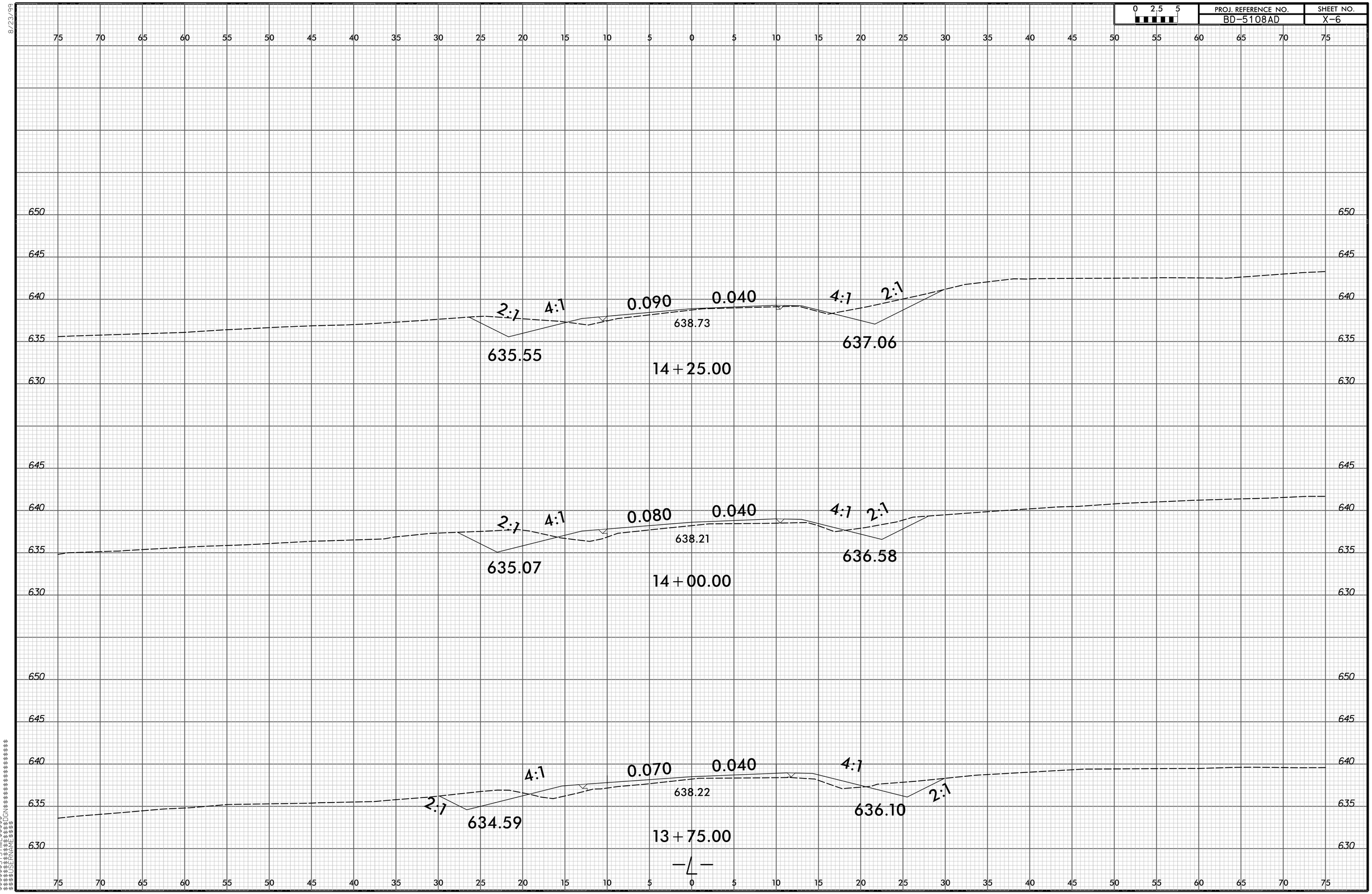

$$$$SYSTIME$$$$
$$$$DGN$$$$
$$$$USERNAME$$$$

-L-

8/23/99

0 2.5 5	PROJ. REFERENCE NO.	SHEET NO.
	BD-5108AD	X-7

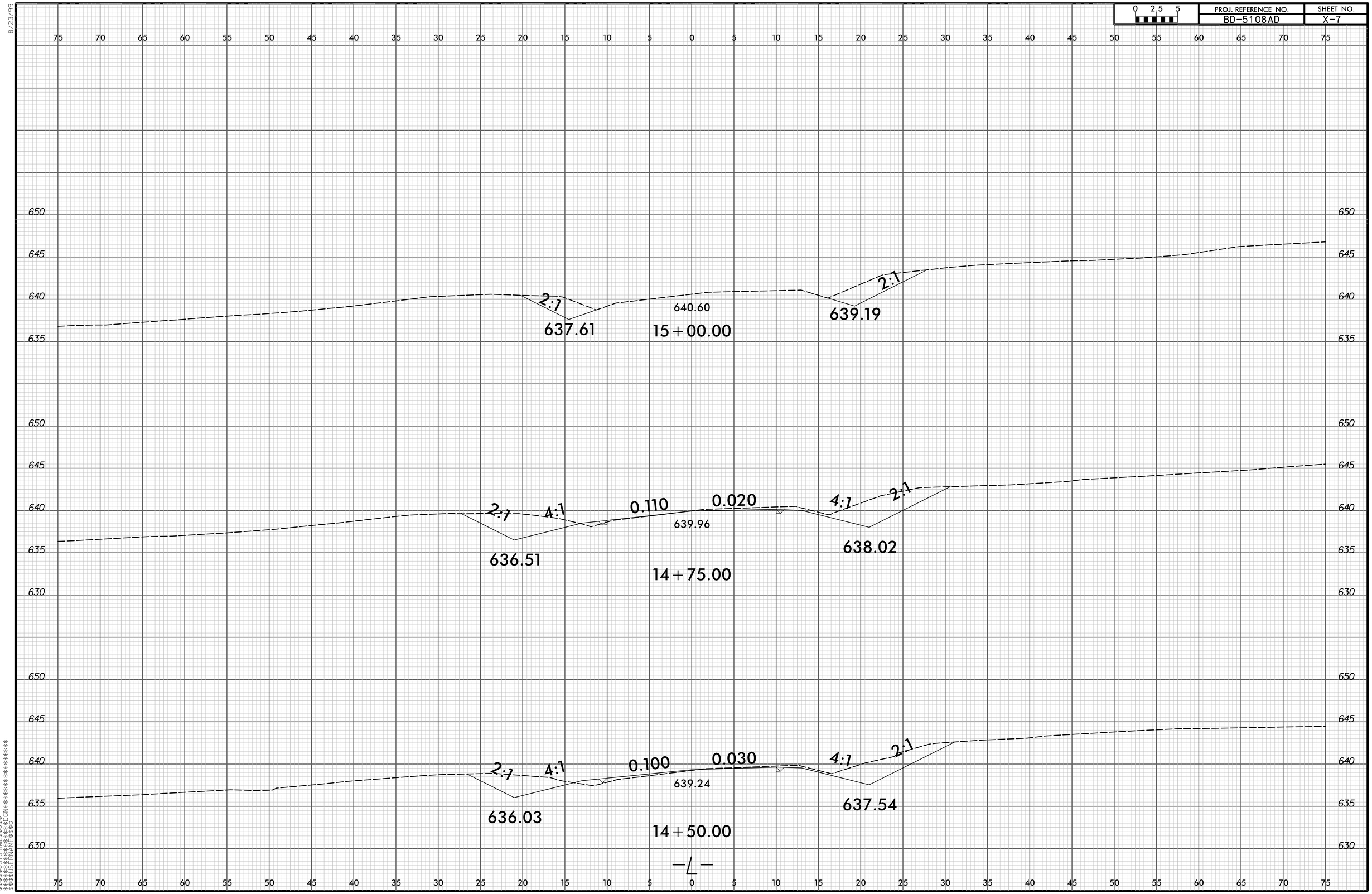

$$$$SYSTIME$$$$
$$$$DGN$$$$
$$$$USERNAME$$$$

F.A. PROJECT NO.: BRZ-1305(10)

BM #1: RR SPIKE IN BASE OF CHESTNUT OAK, STA. 7+61.0 -L-, 59' LT, EL. 635.04

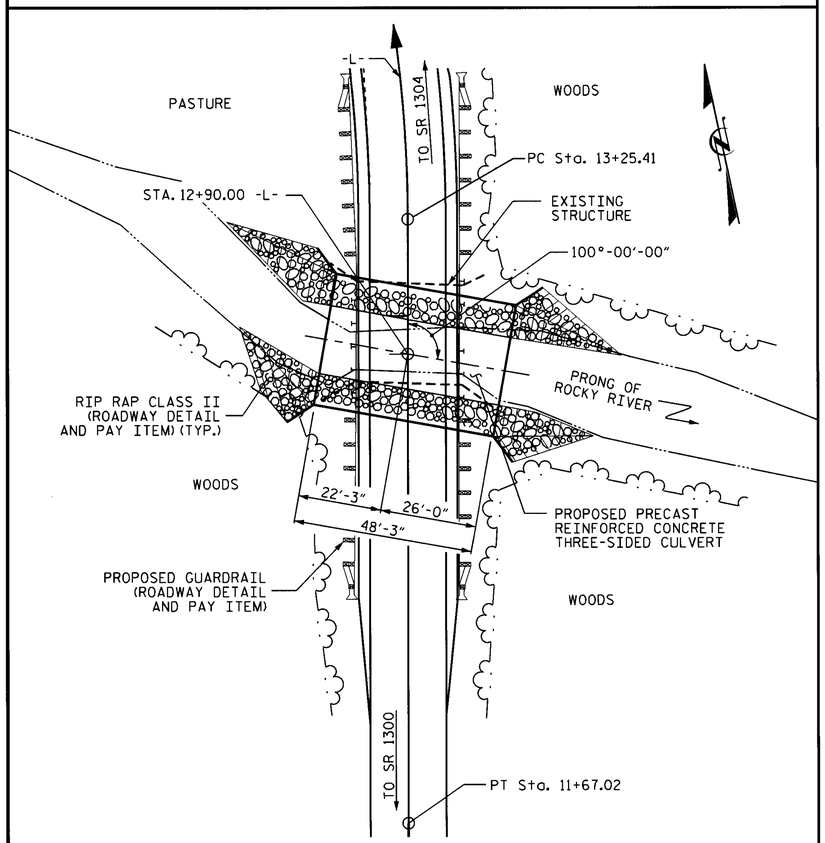

FOR UTILITY INFORMATION, SEE UTILITY PLANS AND SPECIAL PROVISIONS.

LOCATION SKETCH

HYDRAULIC DATA

DESIGN DISCHARGE	= 550 CFS
FREQUENCY OF DESIGN FLOOD	= 5 YRS.
DESIGN HIGH WATER ELEVATION	= 637.4
DRAINAGE AREA	= 6.7 SQ. MI.
BASE DISCHARGE (Q100) (FEMA)	= 2501 CFS
BASE HIGH WATER ELEVATION	= 641.16

OVERTOPPING FLOOD DATA

OVERTOPPING DISCHARGE	= 1300 CFS
FREQUENCY OF OVERTOPPING FLOOD	= 10± YRS.
OVERTOPPING FLOOD ELEVATION	= 638.51

GRADE DATA

GRADE POINT ELEVATION @ STA. 12+90.00 -L-	= 639.32'
TOP OF FOOTING ELEVATION @ STA. 12+90.00 -L-	= 630.48'
ROADWAY FILL SLOPES	= 2:1

TOTAL STRUCTURE QUANTITIES

REMOVAL OF EXISTING STRUCTURE	LUMP SUM
PRECAST REINFORCED CONCRETE THREE-SIDED CULVERT @ STA. 12+90.00 -L-	LUMP SUM
UNCLASSIFIED STRUCTURE EXCAVATION	LUMP SUM
* CLASS A CONCRETE	72 C.Y.

* CLASS A CONCRETE QUANTITY SHOWN IS ESTIMATED FOR THE CULVERT FOOTINGS AND/OR SUB-FOOTINGS (IF USED), HEADWALLS, AND WINGWALLS, AND IS BASED UPON THE BEST INFORMATION AVAILABLE.

FOUNDATION NOTES

THE SCOUR CRITICAL ELEVATION FOR THE BOTTOMLESS CULVERT FOOTINGS FOR THE CULVERT AT STATION 12+90.00 -L- IS THE BOTTOM OF FOOTING ELEVATION. SCOUR CRITICAL ELEVATIONS ARE USED TO MONITOR POSSIBLE SCOUR PROBLEMS DURING THE LIFE OF THE STRUCTURE.

THE SPREAD FOOTINGS FOR THE BOTTOMLESS CULVERT AT STATION 12+90.00 -L- ARE DESIGNED FOR A FACTORED RESISTANCE OF 5 TSF. CHECK FIELD CONDITIONS FOR THE REQUIRED RESISTANCE OF 12 TSF JUST PRIOR TO PLACING CONCRETE.

KEY IN SPREAD FOOTINGS FOR THE BOTTOMLESS CULVERT AT STA. 12+90.00 -L- AT LEAST 12" INTO WEATHERED ROCK WITH A MINIMUM THICKNESS AS SHOWN ON THE PLANS.

THE BOTTOM OF FOOTING ELEVATIONS FOR THE BOTTOMLESS CULVERT AT STATION 12+90.00 -L- MAY BE LOWERED TO SATISFY THE REQUIRED BEARING RESISTANCE OR THE MINIMUM REQUIRED EMBEDMENT INTO WEATHER ROCK.

NOTES

ASSUMED LIVE LOAD ---------- HL-93 OR ALTERNATE LOADING.

MAXIMUM DESIGN FILL---------- 4.46' (AT 10' RIGHT OF ℄ -L-)

MINIMUM DESIGN FILL---------- 3.09' (AT 10' LEFT OF ℄ -L-)

FOR OTHER DESIGN DATA AND NOTES, SEE STANDARD NOTE SHEET.

THE RESIDENT ENGINEER SHALL CHECK THE LENGTH OF CULVERT BEFORE STAKING IT OUT TO MAKE CERTAIN THAT IT WILL PROPERLY TAKE CARE OF THE FILL.

THE EXISTING STRUCTURE CONSISTING OF 1 SPAN @ 25'-6" WITH ASPHALT WEARING SURFACE OVER A TIMBER DECK ON STEEL I-BEAMS SUPERSTRUCTURE AND A CLEAR ROADWAY WIDTH OF 19'-2" ON END BENTS CONSISTING OF TIMBER BULKHEADS, CAPS AND PILES ON CONCRETE SILLS, LOCATED AT THE PROPOSED STRUCTURE LOCATION SHALL BE REMOVED. FOR REMOVAL OF EXISTING STRUCTURE, SEE SPECIAL PROVISIONS.

TO PROVIDE PROTECTION FROM POSSIBLE SCOUR, DO NOT CONSTRUCT CULVERT FOOTINGS AT AN ELEVATION HIGHER THAN SHOWN ON THE PLANS.

FOR RIP RAP AND GEOTEXTILE FABRIC FOR CHANNEL IMPROVEMENT, FLOODPLAIN BENCHING, AND FOOTING PLACEMENT, SEE ROADWAY DETAILS AND PAY ITEM.

FOR BLASTING ADJACENT TO HIGHWAY STRUCTURES, SEE ARTICLE 410-9 OF THE STANDARD SPECIFICATIONS.

THIS STRUCTURE HAS BEEN DESIGNED IN ACCORDANCE WITH "HEC 18-EVALUATING SCOUR AT BRIDGES."

FOR PRECAST REINFORCED CONCRETE THREE-SIDED CULVERT, SEE SPECIAL PROVISIONS.

INASMUCH AS THE PAINT SYSTEM ON THE EXISTING STRUCTURAL STEEL CONTAINS LEAD, THE CONTRACTOR'S ATTENTION IS DIRECTED TO ARTICLE 107-1 OF THE STANDARD SPECIFICATIONS. ANY COST RESULTING FROM COMPLIANCE WITH APPLICABLE STATE OR FEDERAL REGULATIONS PERTAINING TO HANDLING OF MATERIALS CONTAINING LEAD BASED PAINT SHALL BE INCLUDED IN THE BID PRICE FOR "REMOVAL OF EXISTING STRUCTURE."

REMOVAL OF THE EXISTING BRIDGE SHALL BE PERFORMED SO AS NOT TO ALLOW DEBRIS TO FALL INTO THE WATER. THE CONTRACTOR SHALL REMOVE THE BRIDGE AND SUBMIT PLANS FOR DEMOLITION IN ACCORDANCE WITH ARTICLE 402-2 OF THE STANDARD SPECIFICATIONS.

FOR FALSEWORK AND FORMWORK, SEE SPECIAL PROVISIONS.

FOR CULVERT DIVERSION DETAILS AND PAY ITEM, SEE EROSION CONTROL PLANS.

FOR CRANE SAFETY, SEE SPECIAL PROVISIONS.

FOR GROUT FOR STRUCTURES, SEE SPECIAL PROVISIONS.

FOR SUBMITTAL OF WORKING DRAWINGS, SEE SPECIAL PROVISIONS.

THE CONTRACTOR SHALL PROVIDE INDEPENDENT ASSURANCE SAMPLES OF REINFORCING STEEL AS FOLLOWS: FOR PROJECTS REQUIRING UP TO 400 TONS OF REINFORCING STEEL, ONE 30 INCH SAMPLE OF EACH SIZE BAR USED, AND FOR PROJECTS REQUIRING OVER 400 TONS OF REINFORCING STEEL, TWO 30 INCH SAMPLES OF EACH SIZE BAR USED. THE BARS FROM WHICH THE SAMPLES ARE TAKEN MUST THEN BE SPLICED WITH REPLACEMENT BARS OF THE SIZE AND LENGTH OF THE SAMPLE, PLUS A MINIMUM LAP SPLICE OF THIRTY BAR DIAMETERS. PAYMENT FOR THE SAMPLES OF REINFORCING STEEL SHALL BE CONSIDERED INCIDENTAL TO THE VARIOUS PAY ITEMS.

THE CULVERT SECTIONS AND WINGS SHALL BE DESIGNED TO HANDLE FULL DEPTH HYDROSTATIC PRESSURE IF WEEP HOLES ARE NOT UTILIZED. IF PROVIDED, WEEP HOLES SHALL BE LOCATED A MINIMUM HEIGHT OF 6 INCHES ABOVE THE NORMAL FLOW LINE AND HAVE A MAXIMUM SPACING OF 10 FEET.

THE CONTRACTORS ATTENTION IS CALLED TO NOTE THAT A FLAT TOPPED CULVERT IS REQUIRED. THE ARCH SPAN ALTERNATIVE WILL NOT BE ALLLOWED.

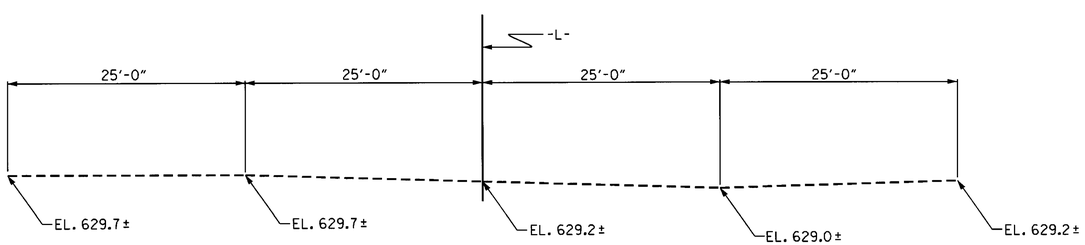

PROFILE ALONG ℄ CULVERT

I HEREBY CERTIFY THESE PLANS ARE THE AS-BUILT PLANS

NORTH CAROLINA PROFESSIONAL SEAL 16301 ENGINEER TING HSING FANG
4/7/14

NORTH CAROLINA PROFESSIONAL SEAL 21545 ENGINEER STEVEN L. WANCE
04/07/14

PROJECT NO. BD-5108AD
CHATHAM COUNTY
STATION: 12+90.00 -L-

SHEET 1 OF 4 REPLACES BRIDGE NO. 287

STATE OF NORTH CAROLINA
DEPARTMENT OF TRANSPORTATION
RALEIGH

PRECAST REINFORCED CONCRETE THREE-SIDED CULVERT
100° SKEW

REVISIONS								SHEET NO.
NO.	BY:	DATE:	NO.	BY:	DATE:			C-1
1			3					TOTAL SHEETS
2			4					4

ASSEMBLED BY : S. B. WILLIAMS DATE : 12/30/13
CHECKED BY : S WANCE DATE : 03/14

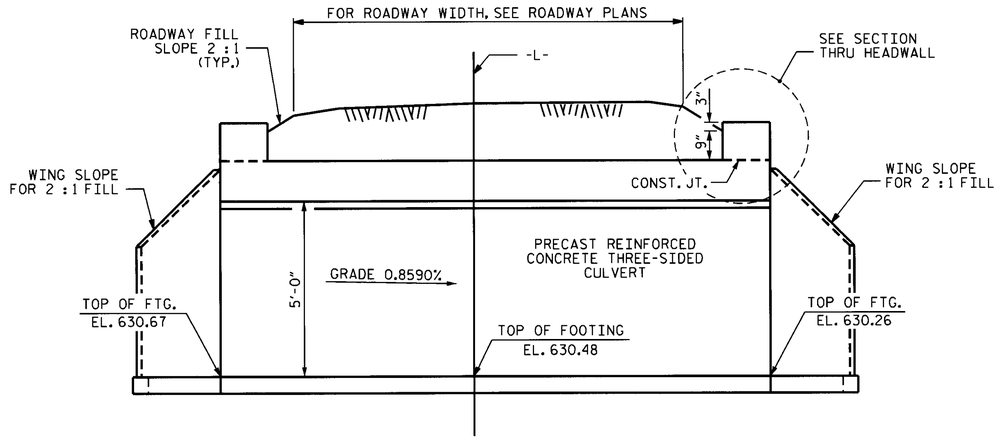

CULVERT SECTION NORMAL TO ROADWAY

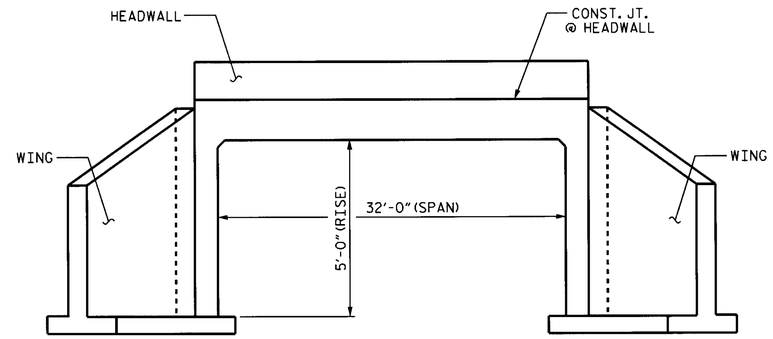

END ELEVATION

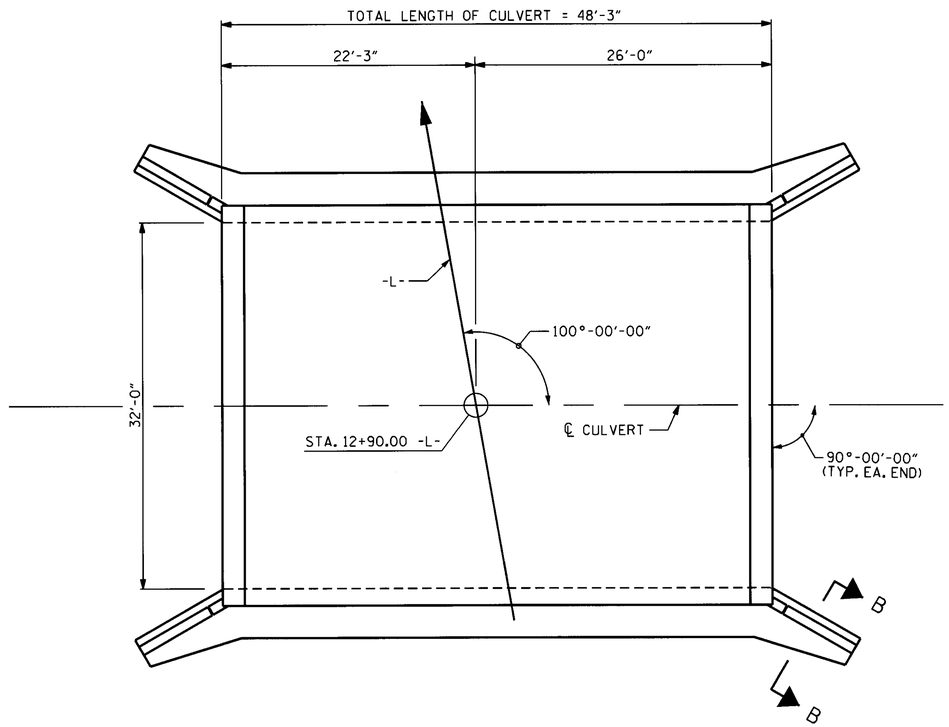

LENGTH FOR PRECAST THREE-SIDED CULVERT

SEE SHEET 3 OF 4 FOR SECTION B-B

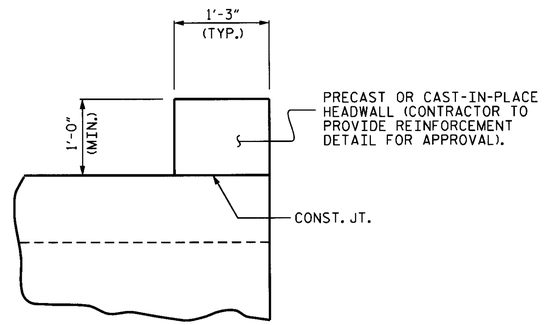

SECTION THRU HEADWALL

PROJECT NO. BD-5108AD
CHATHAM COUNTY
STATION: 12+90.00 -L-

SHEET 2 OF 4

NORTH CAROLINA PROFESSIONAL SEAL 21545 ENGINEER STEVEN L. WANCE
04/07/14

STATE OF NORTH CAROLINA
DEPARTMENT OF TRANSPORTATION
RALEIGH

PRECAST REINFORCED CONCRETE THREE-SIDED CULVERT

100° SKEW

REVISIONS						SHEET NO.
NO.	BY:	DATE:	NO.	BY:	DATE:	C-2
1			3			TOTAL SHEETS
2			4			4

ASSEMBLED BY : S. B. WILLIAMS DATE : 12/30/13 CHECKED BY : S. WANCE DATE : 03/14	SPECIAL	
DRAWN BY : K.H. COMPTON DATE : JULY. 2011 CHECKED BY : R.W. WRIGHT DATE : JULY. 2011	STANDARD	

07-APR-2014 12:23
S:\DPG2\Tlng\DIV8BD\BD-5108AD Chatham 287\FinalPlans\BD5108AD_sd_cu.dgn
swance

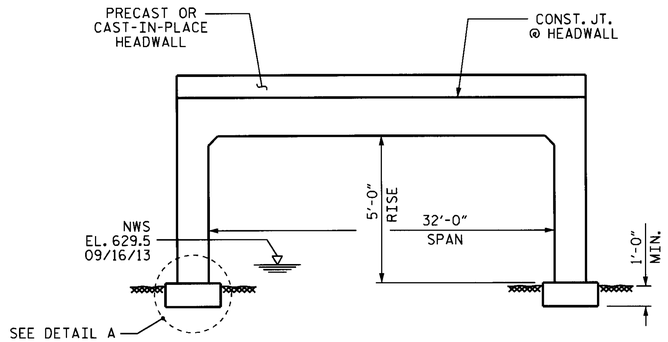

THREE-SIDED FLAT TOPPED CULVERT

RIGHT ANGLE SECTION OF PRECAST CONCRETE THREE-SIDED CULVERT

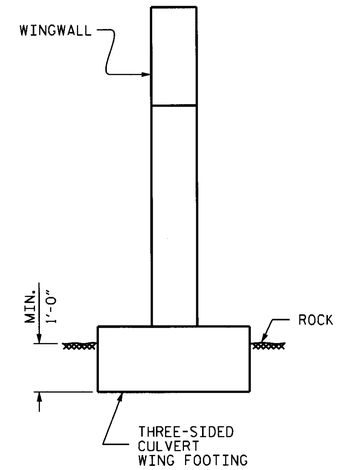

SECTION B-B

CURTAIN WALL NOT REQUIRED WHEN FOOTINGS ARE KEYED INTO ROCK

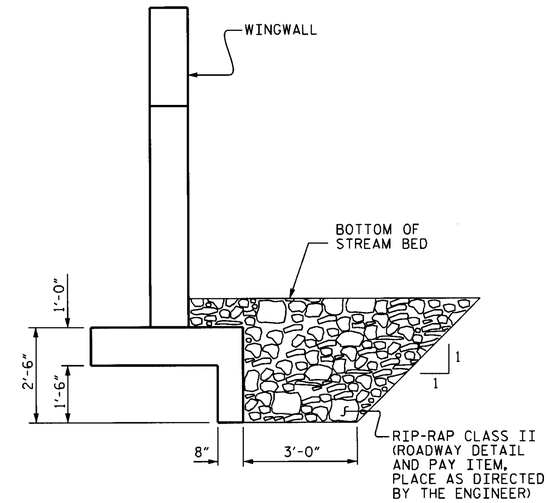

SECTION B-B

WHEN FOOTINGS CANNOT BE KEYED INTO ROCK

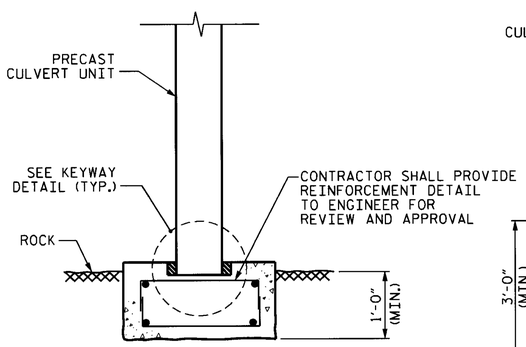

DETAIL A

FOOTING KEYED 1'-0" INTO ROCK

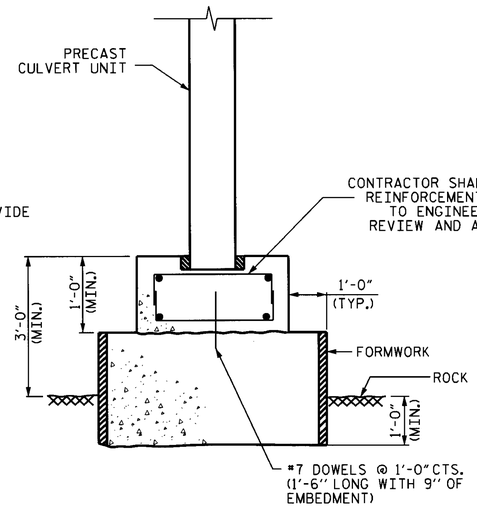

OPTION #1

SUB-FOOTING KEYED 1'-0" INTO ROCK

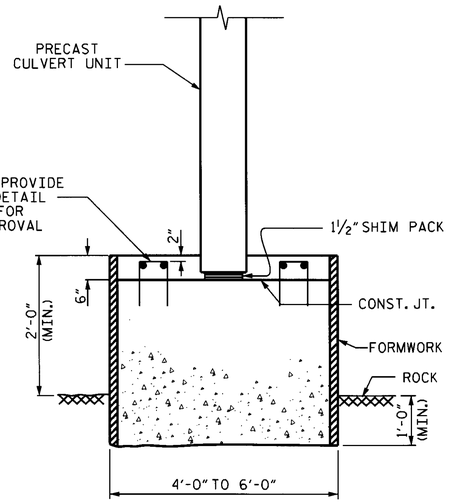

OPTION #2

MONOLITHIC SUB-FOOTING KEYED 1'-0" INTO ROCK

DETAIL A OPTIONS

OPTIONS #1 AND #2 REPRESENT THE FOUNDATION ALTERNATIVES WHEN THE ROCKLINE IS BELOW THE FOOTING.

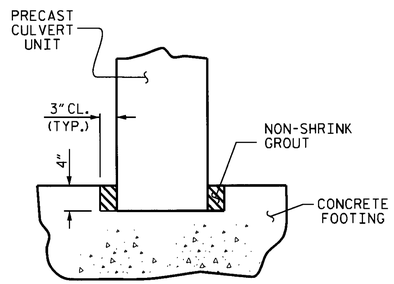

KEYWAY DETAIL

PROJECT NO. BD-5108AD

CHATHAM COUNTY

STATION: 12+90.00 -L-

SHEET 3 OF 4

NORTH CAROLINA PROFESSIONAL SEAL 21545 ENGINEER STEVEN L. WANCE

04/07/14

STATE OF NORTH CAROLINA
DEPARTMENT OF TRANSPORTATION
RALEIGH

PRECAST REINFORCED CONCRETE THREE-SIDED CULVERT

100° SKEW

REVISIONS						SHEET NO.
NO.	BY:	DATE:	NO.	BY:	DATE:	C-3
1			3			TOTAL SHEETS
2			4			4

DRAWN BY : S. B. WILLIAMS DATE : 12/30/13
CHECKED BY : S. WANCE DATE : 03/14

07-APR-2014 12:23
S:\DPG2\Tlng\DIV8BD\BD-5108AD Chatham 287\Final Plans\BD5108AD_sd_cu.dgn
swance

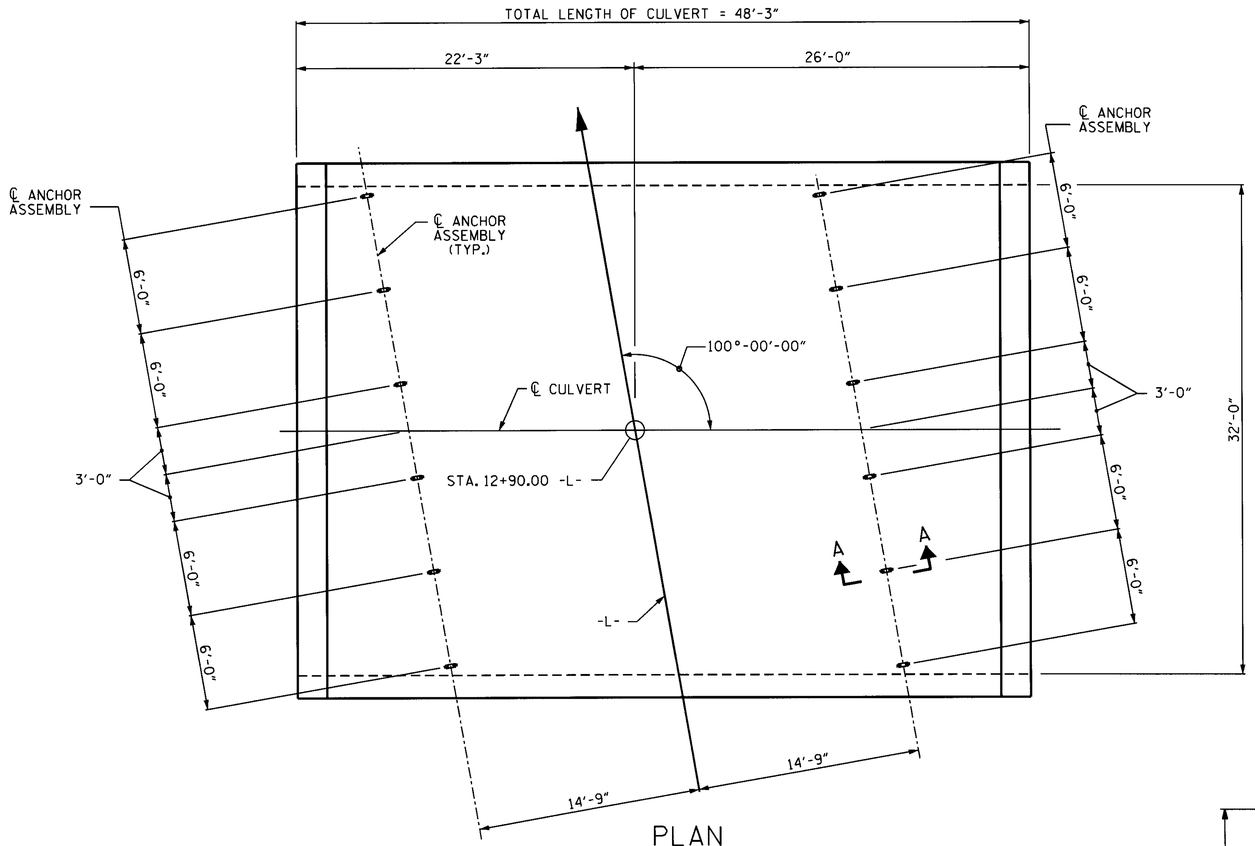

PLAN

SHOWING GUARDRAIL ANCHOR ASSEMBLY SPACINGS

NOTES

THE GUARDRAIL ANCHOR ASSEMBLY FOR CULVERTS SHALL CONSIST OF THE FOLLOWING COMPONENTS :

A. FERRULES SHALL BE MADE FROM STEEL MEETING THE REQUIREMENTS OF AASHTO M169, GRADE 12L14 AND SHALL HAVE A MINIMUM LENGTH OF THREADS OF 2½".

B. 4 - 1"Ø X 2¼" BOLTS WITH WASHERS, BOLTS SHALL CONFORM TO THE REQUIREMENTS OF ASTM A307. BOLTS AND WASHERS SHALL BE GALVANIZED. (AT THE CONTRACTOR'S OPTION, STAINLESS STEEL BOLTS AND WASHERS MAY BE USED AS AN ALTERNATE FOR THE 1"Ø X 2¼" GALVANIZED BOLTS AND WASHERS. THEY SHALL CONFORM TO OR EXCEED THE MECHANICAL REQUIREMENTS OF ASTM A307. THE USE OF THIS ALTERNATE SHALL BE APPROVED BY THE ENGINEER.)

C. WIRE STRUTS SHOWN IN THE GUARDRAIL ANCHOR ASSEMBLY FOR CULVERTS DETAIL ARE MINIMUM ALLOWABLE SIZE AND SHALL HAVE A MINIMUM TENSILE STRENGTH OF 100,000 P.S.I. AS AN OPTION, A 7/16"Ø WIRE STRUT WITH A MINIMUM TENSILE STRENGTH OF 90,000 PSI IS ACCEPTABLE.

GUARDRAIL ANCHOR ASSEMBLY WITH BOLTS SHALL BE ASSEMBLED IN THE SHOP. BOLT THREADS MAY BE RECUT AS NECESSARY TO INSURE FIT.

THE COST OF THE GUARDRAIL ANCHOR ASSEMBLY FOR CULVERTS COMPLETE IN PLACE, SHALL BE INCLUDED IN THE UNIT CONTRACT PRICE BID FOR CLASS "A" CONCRETE.

FERRULES TO BE PLUGGED DURING POURING OF SLAB AS RECOMMENDED BY THE MANUFACTURER.

AT THE CONTRACTOR'S OPTION, FERRULES WITH OPEN OR CLOSED ENDS MAY BE USED.

PAYMENT FOR GUARDRAIL, POSTS, AND POST BASE PLATES IS INCLUDED IN ROADWAY PAY ITEMS.

SLAB REINFORCING STEEL MAY BE SHIFTED AS NECESSARY TO CLEAR GUARDRAIL ANCHOR ASSEMBLY. CARE SHOULD BE TAKEN TO KEEP THE SHIFTING OF REINFORCING STEEL TO A MINIMUM.

THE CONTRACTOR MAY USE ADHESIVELY ANCHORED ANCHOR BOLTS IN PLACE OF GUARDRAIL ANCHOR ASSEMBLY. LEVEL TWO FIELD TESTING IS REQUIRED, AND THE YIELD LOAD OF THE 1"Ø BOLT IS 21.8 KIPS. FOR ADHESIVELY ANCHORED ANCHOR BOLTS OR DOWELS, SEE STANDARD SPECIFICATIONS.

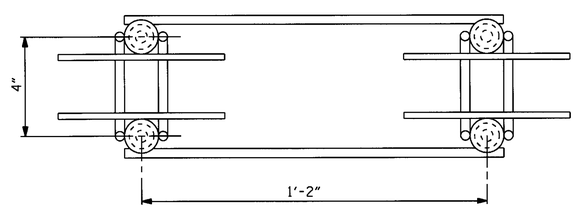

PLAN

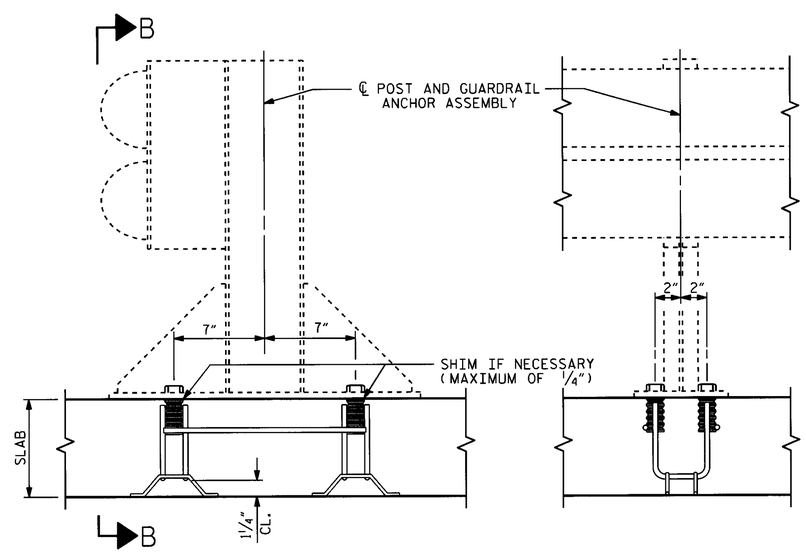

SECTION A-A

SECTION B-B

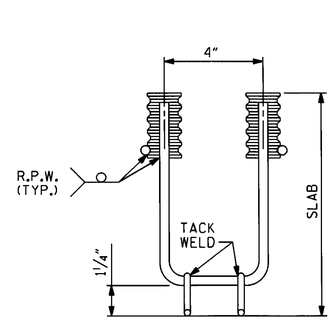

ELEVATION

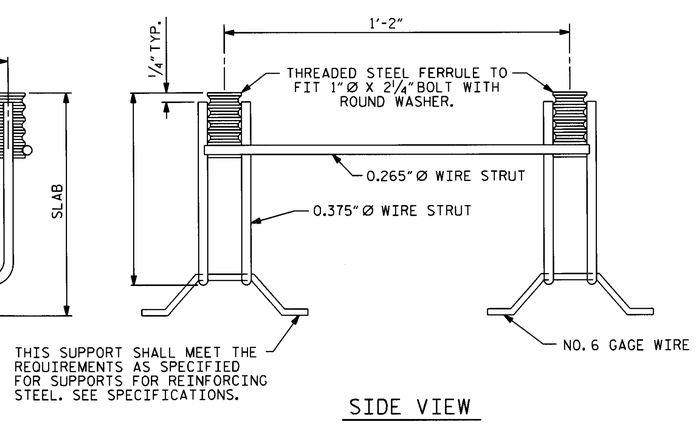

SIDE VIEW

GUARDRAIL ANCHOR ASSEMBLY FOR CULVERTS

NORTH CAROLINA PROFESSIONAL SEAL 21545 ENGINEER STEVEN L. WANCE

04/07/14

PROJECT NO. BD-5108AD

CHATHAM COUNTY

STATION: 12+90.00 -L-

SHEET 4 OF 4

STATE OF NORTH CAROLINA
DEPARTMENT OF TRANSPORTATION
RALEIGH

STANDARD

ANCHORAGE DETAILS FOR GUARDRAIL ANCHOR ASSEMBLY FOR CULVERTS

ASSEMBLED BY : S. B. WILLIAMS	DATE : 12/30/13		
CHECKED BY : S. WANCE	DATE : 03/14		
DRAWN BY : FCJ 6/88	REV. 5/7/03	RWW/JTE	
CHECKED BY : ARB 6/88	REV. 5/1/06R	KMM/GM	
	REV. 10/1/11	MAA/GM	

REVISIONS						SHEET NO.
NO.	BY:	DATE:	NO.	BY:	DATE:	C-4
1			3			TOTAL SHEETS
2			4			4

STD. NO. GRA1

07-APR-2014 12:23
S:\OPGS\Tlng\DIV8BD\BD-5108AD Chatham 287\Final Plans\BD5108AD_sd_cu.dgn
swance

09/08/99

TIP PROJECT: BD-5108AD

CONTRACT:

STATE OF NORTH CAROLINA
DIVISION OF HIGHWAYS

T.I.P. NO.	SHEET NO.
BD-5108AD	UO-1

CHATHAM COUNTY

LOCATION: BRIDGE NO. 287 ON SR 1305 (COOPER ROAD) OVER PRONG OF ROCKY RIVER

TYPE OF WORK: ELECTRIC RELOCATION

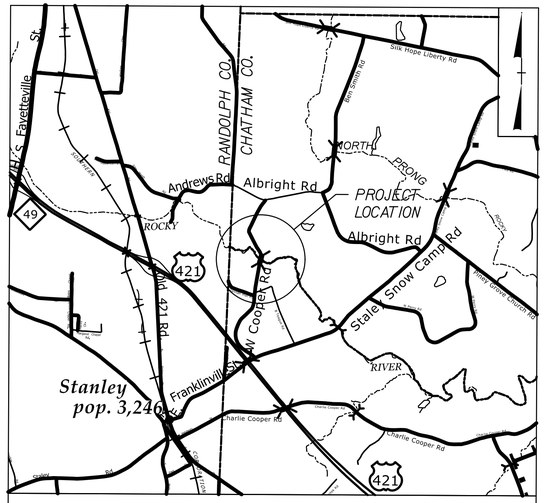

VICINITY MAP

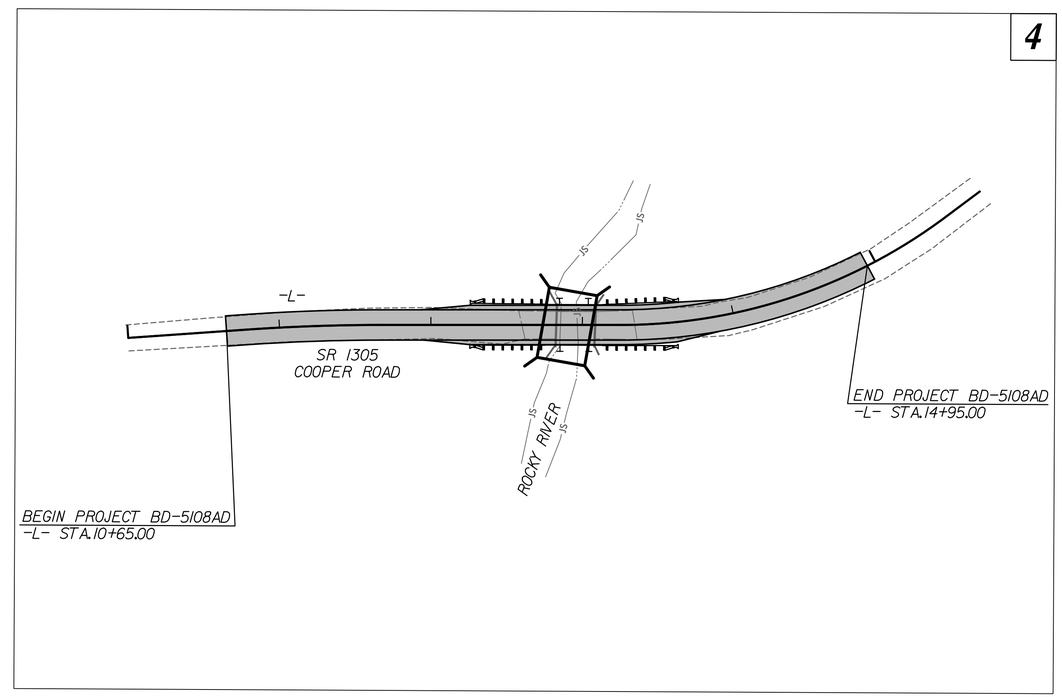

INDEX OF SHEETS

SHEET NO.	DESCRIPTION
UO-1	TITLE SHEET
UO-2	UTILITIES BY OTHERS PLAN SHEET

UTILITY OWNERS ON PROJECT

1) DUKE /PROGRESS ENERGY

SEPI ENGINEERING & CONSTRUCTION
1025 Wade Avenue
Raleigh, NC 27605
Tel:919-789-9977
Fax:919-789-9591
License: C-2197

UTILITIES COORDINATION CONSULTANT
Lavon Tyson

PREPARED IN THE OFFICE OF:
DIVISION OF HIGHWAYS
UTILITIES ENGINEERING SECTION
1591 MAIL SERVICES CENTER
RALEIGH NC 27699-1591
PHONE (919) 707-6690
FAX (919) 250-4151

Roger Worthington, P.E. UTILITIES SECTION ENGINEER
Ron Wilkins, PE UTILITIES SQUAD LEADER PROJECT ENGINEER

$$$$$$$SYSTIME$$$$$$$
$$$$$$$$$$$$$$$$$$$DGN$$$$$$$$$$$$$$$$$$$
$$$$USERNAME$$$$

PROJECT REFERENCE NO.	SHEET NO.
BD-5108AD	U0-2

SEPI ENGINEERING & CONSTRUCTION
1025 Wade Avenue
Raleigh, NC 27605
Tel:919-789-9977
Fax:919-789-9591
License: C-2197

UTILITIES BY OTHERS

NOTE:
ALL PROPOSED UTILITY WORK SHOWN ON THIS SHEET WILL BE DONE BY OTHERS

1" = 20'

NC GRID NAD 83 NA 2011

-L-

PI Sta 11+22.39
△ = 3° 59' 50.4" (RT)
D = 4° 28' 34.4"
L = 89.30'
T = 44.67'
R = 1,280.00'

PI Sta 14+44.61
△ = 36° 49' 21.2" (LT)
D = 15° 59' 59.8"
L = 230.14'
T = 119.20'
R = 358.10'

BEGIN PROJECT BD-5108AD
-L- STA.10+65.00

END PROJECT BD-5108AD
-L- STA.14+95.00

PC Sta. 13+25.41

PT Sta. 15+55.55

POT Sta. 15+83.27

N 45°13'56" W
283.99'

N 12° 18' 28.1" E

N 8° 18' 37.7" E

N 24° 30' 53.1" W

S 62°46'08" E
73.47'

S 24°02'45" E
73.31'

S 89°07'09" E
284.67'

PC Sta. 10+77.72

PT Sta. 11+67.02

PUI Sta. 10+00.00

MATCHLINE (UTILITIES)

MATCHLINE (UTILITIES)

TO SR 1300

SR 1305 COOPER RD

20' SOIL & GRAVEL

SR 1304

EXISTING R/W

PASTURE

WOODS

WOODS

WOODS

EXCAVATION

EXCAVATION

SLOPE STAKE LINE (TYP.)

GRAU 350

GRAU 350

GRAU 350

GRAU 350

10:1

25' (TYP.)

+50

+25

EIP

EIP

EXIST

PROP O/H POW LINES

PROP O/H POW LINES

PROP O/H POW LINES

PROP O/H POW LINES

PDE

PUE

DUE

TDE

TB

JS

E

P

E658AF

E657AF

E656AF

18BG44

PRECAST CONCRETE BOTTOMLESS CULVERT 32' X 5'

EXIST OH POWER LINE TO REMAIN AS IS

PROP OH POWER LINE (DUKE/PROGRESS)

PROP POLE INSTALL (DUKE/PROGRESS)

OH POWER LINE TO BE REMOVED

PROP POLE INSTALL (DUKE/PROGRESS)

UTILITY POLE OWNERS
1- DUKE / PROGRESS ENERGY - E656
2 - DUKE / PROGRESS ENERGY - E657
3 - DUKE / PROGRESS ENERGY - E658

5/14/99