This electronic collection of documents is provided for the convenience of the user and is Not a Certified Document –

The documents contained herein were originally issued and sealed by the individuals whose names and license numbers appear on each page, on the dates appearing with their signature on that page.
This file or an individual page shall not be considered a certified document.

SUMMIT
DESIGN AND ENGINEERING SERVICES

DocuSign Envelope ID: 2FEC140E-760E-4EDD-AC08-BDB44E5B20AF

09/08/99

TIP PROJECT: 17BP.8.R.77

CONTRACT: DH00198

See Sheet 1A For Index of Sheets
See Sheet 1B For Conventional Symbols
See Sheet 1C-1 For Survey Control Sheet

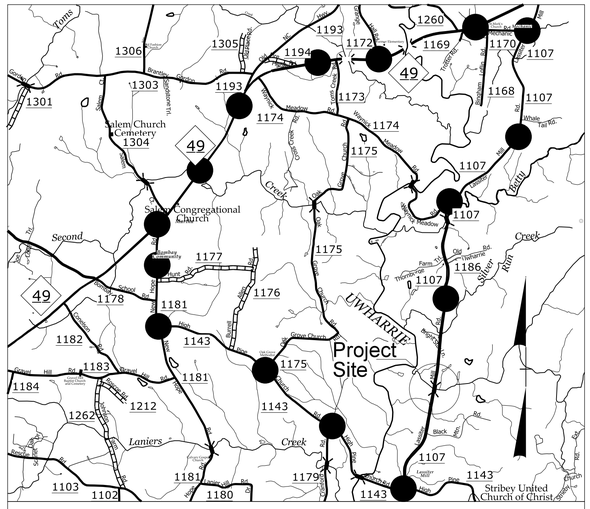

VICINITY MAP

THIS PROJECT IS NOT WITHIN ANY MUNICIPAL BOUNDARIES.
● DETOUR ROUTE

STATE OF NORTH CAROLINA
DIVISION OF HIGHWAYS

RANDOLPH COUNTY

LOCATION: BRIDGE NO. 750232 ON SR 1107 (LASSITER MILL RD) OVER HANNAHS CREEK.

TYPE OF WORK: GRADING, DRAINAGE, PAVING AND STRUCTURE.

STATE	STATE PROJECT REFERENCE NO.	SHEET NO.	TOTAL SHEETS
N.C.	17BP.8.R.77	1	

STATE PROJ. NO.	F.A. PROJ. NO.	DESCRIPTION
17BP.8.R.77	NA	PE
17BP.8.R.77	NA	R/W
17BP.8.R.77	NA	CONST

Prepared in the Office of: SUNGATE DESIGN GROUP, P.A. — NC FIRM LICENSE No: C-0890, 915 Jones Franklin Road, Raleigh, NC 27606, (919) 859-2243, (919) 859-6258 (FAX)

Prepared in the Office of: MI ENGINEERING — NC FIRM LICENSE No: P-0671, 1011 Schaub Drive, Suite 100, Raleigh, NC 27606, (919) 851-6606, (919) 851-6645 (FAX)

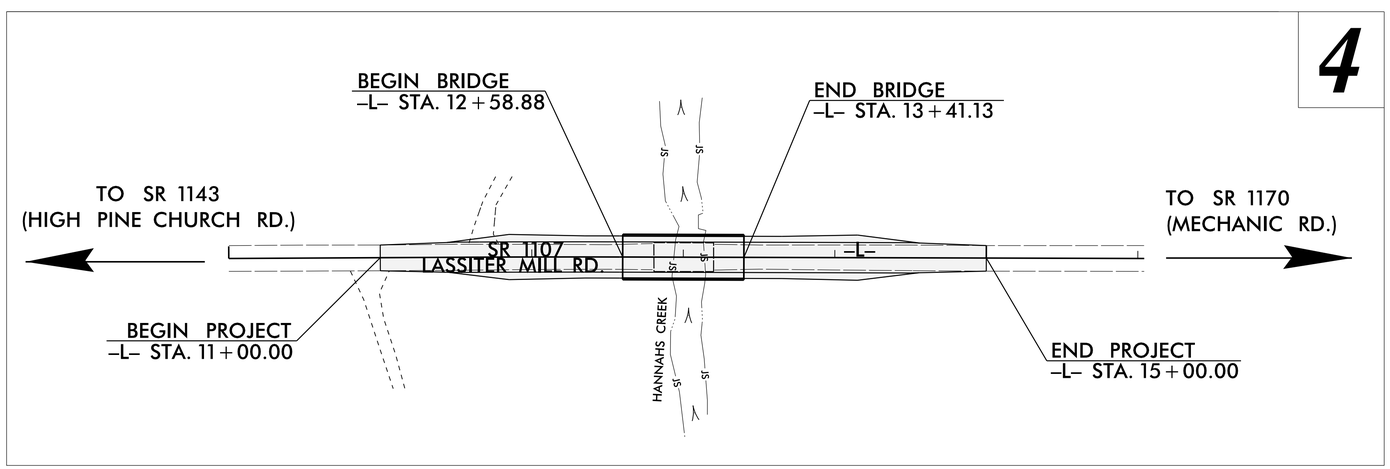

NC GRID NAD 83 NA 2011

CLEARING ON THIS PROJECT SHALL BE PERFORMED TO THE LIMITS ESTABLISHED BY METHOD III.

GRAPHIC SCALES

50 25 0 50 100
PLANS

50 25 0 50 100
PROFILE (HORIZONTAL)

10 5 0 10 20
PROFILE (VERTICAL)

DESIGN DATA

ADT 2011 = 550
T = 6 % *
V = 55 MPH
* TTST = 3% DUAL 3%
FUNC CLASS =
LOCAL RURAL

SUB-REGIONAL TIER

PROJECT LENGTH

LENGTH ROADWAY PROJECT = 0.060 MILES
LENGTH STRUCTURES PROJECT = 0.015 MILES
TOTAL LENGTH PROJECT = 0.075 MILES

NCDOT CONTACT: TIM WELCH, PE
NCDOT HWY DIV 8

Prepared in the Office of: SUMMIT DESIGN AND ENGINEERING SERVICES FIRM NO. P-0339
504 Meadowland Drive, Hillsborough, NC 27278-8551, Voice: (919) 732-3883, Fax: (919) 732-6776, www.summitde.net

2012 STANDARD SPECIFICATIONS

RIGHT OF WAY DATE: NOVEMBER 2014

LETTING DATE: JULY 26, 2016

TRACY N. PARROTT, PE
PROJECT ENGINEER

BRANDON W. JOHNSON, PE
PROJECT DESIGN ENGINEER

HYDRAULICS ENGINEER
4/8/2016
DocuSigned by: W. Henry Wells Jr.
SIGNATURE:
NORTH CAROLINA PROFESSIONAL SEAL 9334 ENGINEER W. HENRY WELLS, JR. P.E.

ROADWAY DESIGN ENGINEER
4/8/2016
DocuSigned by: Brandon W. Johnson
SIGNATURE:
NORTH CAROLINA PROFESSIONAL SEAL 034371 ENGINEER BRANDON W. JOHNSON P.E.

STATE OF NORTH CAROLINA DEPARTMENT OF TRANSPORTATION

07-APR-2016 16:50
232_Rdy_tsn.dgn
jessica.puszynski

DocuSign Envelope ID: 6C28DFD1-AEB9-4F32-97AA-3411A8BFC24A

8/17/99

PROJECT REFERENCE NO.	SHEET NO.
17BP.8.R.77	1A

ROADWAY DESIGN ENGINEER
9/18/2015

NORTH CAROLINA PROFESSIONAL SEAL 034371 ENGINEER BRANDON W. JOHNSON

DocuSigned by:
Brandon W. Johnson
0429B2B2C9B04E...

Prepared in the Office of:
SUMMIT DESIGN AND ENGINEERING SERVICES
NC FIRM LICENSE Noε P-0339
504 Meadowlands Drive
Hillsborough, NC 27278
(919) 732-3883 - (919) 732-6676 (FAX)

INDEX OF SHEETS

SHEET NUMBER	SHEET
1	TITLE SHEET
1A	INDEX OF SHEETS. GENERAL NOTES. AND LIST OF STANDARD DRAWINGS
1B	CONVENTIONAL SYMBOLS
1C-1	SURVEY CONTROL SHEET
2A-1 THRU 2A-2	PAVEMENT SCHEDULE. TYPICAL SECTIONS. AND WEDGING DETAILS
3B-1	SUMMARY OF DRAINAGE QUANTITIES SUMMARY OF GUARDRAIL. EARTHWORK SUMMARY. AND PARCEL INDEX
4	PLAN SHEET AND PROFILE SHEET
TMP-1 THRU TMP-4	TRAFFIC MANAGEMENT PLANS
PMP-1	PAVEMENT MARKING PLANS
EC-1 THRU EC-5	EROSION CONTROL PLANS
X-1 THRU X-5	CROSS-SECTIONS
S-1 THRU S-15	STRUCTURE PLANS
SN	STANDARD STRUCTURE NOTES

GENERAL NOTES:

2012 SPECIFICATIONS
EFFECTIVE: 01-17-2012
REVISED: 07-30-2012

GRADE LINE:
GRADING AND SURFACING:

THE GRADE LINES SHOWN DENOTE THE FINISHED ELEVATION OF THE PROPOSED SURFACING AT GRADE POINTS SHOWN ON THE TYPICAL SECTIONS. GRADE LINES MAY BE ADJUSTED AT THEIR BEGINNING AND ENDING AND AT STRUCTURES AS DIRECTED BY THE ENGINEER IN ORDER TO SECURE A PROPER TIE-IN.

CLEARING:

CLEARING ON THIS PROJECT SHALL BE PERFORMED TO THE LIMITS ESTABLISHED BY METHOD III.

SUPERELEVATION:

ALL CURVES ON THIS PROJECT SHALL BE SUPERELEVATED IN ACCORDANCE WITH STD. NO. 225.04 AND/OR STD. NO. 225.05 USING THE RATE OF SUPERELEVATION AND RUNOFF SHOWN ON THE PLANS. SUPERELEVATION IS TO BE REVOLVED ABOUT THE GRADE POINTS SHOWN ON THE TYPICAL SECTIONS.

SHOULDER CONSTRUCTION:

ASPHALT. EARTH. AND CONCRETE SHOULDER CONSTRUCTION ON THE HIGH SIDE OF SUPERELEVATED CURVES SHALL BE IN ACCORDANCE WITH STD. NO. 560.01 AND/OR STD. NO. 560.02

DRIVEWAYS:

DRIVEWAYS SHALL BE CONSTRUCTED IN ACCORDANCE WITH STD. 848.03 AT LOCATIONS SHOWN ON PLANS OR AS DIRECTED BY THE ENGINEER.

GUARDRAIL:

THE GUARDRAIL LOCATIONS SHOWN ON THE PLANS MAY BE ADJUSTED DURING CONSTRUCTION AS DIRECTED BY THE ENGINEER. THE CONTRACTOR SHOULD CONSULT WITH THE ENGINEER PRIOR TO ORDERING GUARDRAIL MATERIAL.

TEMPORARY SHORING:

SHORING REQUIRED FOR THE MAINTENANCE OF TRAFFIC WILL BE PAID FOR AS "EXTRA WORK" IN ACCORDANCE WITH SECTION 104-7.

END BENTS:

THE ENGINEER SHALL CHECK THE STRUCTURE END BENT PLANS. DETAILS. AND CROSS-SECTION PRIOR TO SETTING OF THE SLOPE STAKES FOR THE EMBANKMENT OR EXCAVATION APPROACHING A BRIDGE.

UTILITIES:

UTILITY OWNERS ON THIS PROJECT ARE
RANDOLPH EMC AND RANDOLPH TELEPHONE MEM. CORP.
ANY RELOCATION OF EXISTING UTILITIES WILL BE ACCOMPLISHED BY OTHERS.

EFF. 01-17-2012
REV. 10-30-2012

2012 ROADWAY ENGLISH STANDARD DRAWINGS

The following Roadway Standards as appear in "Roadway Standard Drawings" Highway Design Branch - N. C. Department of Transportation - Raleigh. N. C.. Dated January. 2012 are applicable to this project and by reference hereby are considered a part of these plans:

STD.NO.	TITLE
DIVISION 2 - EARTHWORK	
200.03	Method of Clearing - Method III
225.02	Guide for Grading Subgrade - Secondary and Local
225.04	Method of Obtaining Superelevation - Two Lane Pavement
DIVISION 3 - PIPE CULVERTS	
300.01	Method of Pipe Installation
DIVISION 4 - MAJOR STRUCTURES	
422.11	Reinforced Bridge Approach Fills - Sub Regional Tier
DIVISION 5 - SUBGRADE. BASES AND SHOULDERS	
560.01	Method of Shoulder Construction - High Side of Superelevated Curve - Method I
DIVISION 6 - ASPHALT BASES AND PAVEMENTS	
654.01	Pavement Repairs
DIVISION 8 - INCIDENTALS	
840.00	Concrete Base Pad for Drainage Structures
840.14	Concrete Drop Inlet - 12" thru 30" Pipe
840.15	Brick Drop Inlet - 12" thru 30" Pipe
840.16	Drop Inlet Frame and Grates - for use with Std. Dwg 840.14 and 840.15
840.29	Frames and Narrow Slot Flat Grates
840.35	Traffic Bearing Grated Drop Inlet - for Cast Iron Double Frame and Grates
840.36	Traffic Bearing Grated Drop Inlet - for Steel (840.37) Double Frame and Grates
840.37	Steel Grate and Frame
840.46	Traffic Bearing Precast Drainage Structure
862.01	Guardrail Placement
862.02	Guardrail Installation
862.03	Structure Anchor Units (Beg. March 2013 Letting use detail in lieu of Standard)
876.02	Guide for Rip Rap at Pipe Outlets

17-SEP-2015 11:37
J:\32Randolph\1A.dgn
jessica.guszinski

12/05/11

PROJECT REFERENCE NO.	SHEET NO.
17BP.8.R.77	1B

Note: Not to Scale

****S.U.E. = Subsurface Utility Engineering***

STATE OF NORTH CAROLINA
DIVISION OF HIGHWAYS

CONVENTIONAL PLAN SHEET SYMBOLS

BOUNDARIES AND PROPERTY:

- State Line
- County Line
- Township Line
- City Line
- Reservation Line
- Property Line
- Existing Iron Pin — EIP
- Property Corner
- Property Monument — ECM
- Parcel/Sequence Number — 123
- Existing Fence Line
- Proposed Woven Wire Fence
- Proposed Chain Link Fence
- Proposed Barbed Wire Fence
- Existing Wetland Boundary — WLB
- Proposed Wetland Boundary — WLB
- Existing Endangered Animal Boundary — EAB
- Existing Endangered Plant Boundary — EPB
- Known Soil Contamination: Area or Site
- Potential Soil Contamination: Area or Site

BUILDINGS AND OTHER CULTURE:

- Gas Pump Vent or U/G Tank Cap
- Sign — S
- Well — W
- Small Mine
- Foundation
- Area Outline
- Cemetery
- Building
- School
- Church
- Dam

HYDROLOGY:

- Stream or Body of Water
- Hydro, Pool or Reservoir
- Jurisdictional Stream — JS
- Buffer Zone 1 — BZ 1
- Buffer Zone 2 — BZ 2
- Flow Arrow
- Disappearing Stream
- Spring
- Wetland
- Proposed Lateral, Tail, Head Ditch — FLOW
- False Sump

RAILROADS:

- Standard Gauge — CSX TRANSPORTATION
- RR Signal Milepost — MILEPOST 35
- Switch — SWITCH
- RR Abandoned
- RR Dismantled

RIGHT OF WAY:

- Baseline Control Point
- Existing Right of Way Marker
- Existing Right of Way Line
- Proposed Right of Way Line — RW
- Proposed Right of Way Line with Iron Pin and Cap Marker — RW
- Proposed Right of Way Line with Concrete or Granite R/W Marker — RW
- Proposed Control of Access Line with Concrete C/A Marker — CA
- Existing Control of Access — CA
- Proposed Control of Access — CA
- Existing Easement Line — E
- Proposed Temporary Construction Easement — E
- Proposed Temporary Drainage Easement — TDE
- Proposed Permanent Drainage Easement — PDE
- Proposed Permanent Drainage / Utility Easement — DUE
- Proposed Permanent Utility Easement — PUE
- Proposed Temporary Utility Easement — TUE
- Proposed Aerial Utility Easement — AUE
- Proposed Permanent Easement with Iron Pin and Cap Marker

ROADS AND RELATED FEATURES:

- Existing Edge of Pavement
- Existing Curb
- Proposed Slope Stakes Cut — C
- Proposed Slope Stakes Fill — F
- Proposed Curb Ramp — CR
- Existing Metal Guardrail
- Proposed Guardrail
- Existing Cable Guiderail
- Proposed Cable Guiderail
- Equality Symbol
- Pavement Removal

VEGETATION:

- Single Tree
- Single Shrub
- Hedge
- Woods Line
- Orchard
- Vineyard — Vineyard

EXISTING STRUCTURES:

MAJOR:

- Bridge, Tunnel or Box Culvert — CONC
- Bridge Wing Wall, Head Wall and End Wall — CONC WW

MINOR:

- Head and End Wall — CONC HW
- Pipe Culvert
- Footbridge
- Drainage Box: Catch Basin, DI or JB — CB
- Paved Ditch Gutter
- Storm Sewer Manhole — S
- Storm Sewer — S

UTILITIES:

POWER:

- Existing Power Pole
- Proposed Power Pole
- Existing Joint Use Pole
- Proposed Joint Use Pole
- Power Manhole — P
- Power Line Tower
- Power Transformer
- U/G Power Cable Hand Hole
- H-Frame Pole
- Recorded U/G Power Line — P
- Designated U/G Power Line (S.U.E.*) — P

TELEPHONE:

- Existing Telephone Pole
- Proposed Telephone Pole
- Telephone Manhole — T
- Telephone Booth
- Telephone Pedestal — T
- Telephone Cell Tower
- U/G Telephone Cable Hand Hole — HH
- Recorded U/G Telephone Cable — T
- Designated U/G Telephone Cable (S.U.E.*) — T
- Recorded U/G Telephone Conduit — TC
- Designated U/G Telephone Conduit (S.U.E.*) — TC
- Recorded U/G Fiber Optics Cable — T FO
- Designated U/G Fiber Optics Cable (S.U.E.*) — T FO

WATER:

- Water Manhole — W
- Water Meter
- Water Valve
- Water Hydrant
- Recorded U/G Water Line — W
- Designated U/G Water Line (S.U.E.*) — W
- Above Ground Water Line — A/G Water

TV:

- TV Satellite Dish
- TV Pedestal — C
- TV Tower
- U/G TV Cable Hand Hole — HH
- Recorded U/G TV Cable — TV
- Designated U/G TV Cable (S.U.E.*) — TV
- Recorded U/G Fiber Optic Cable — TV FO
- Designated U/G Fiber Optic Cable (S.U.E.*) — TV FO

GAS:

- Gas Valve
- Gas Meter
- Recorded U/G Gas Line — G
- Designated U/G Gas Line (S.U.E.*) — G
- Above Ground Gas Line — A/G Gas

SANITARY SEWER:

- Sanitary Sewer Manhole
- Sanitary Sewer Cleanout
- U/G Sanitary Sewer Line — SS
- Above Ground Sanitary Sewer — A/G Sanitary Sewer
- Recorded SS Forced Main Line — FSS
- Designated SS Forced Main Line (S.U.E.*) — FSS

MISCELLANEOUS:

- Utility Pole
- Utility Pole with Base
- Utility Located Object
- Utility Traffic Signal Box — S
- Utility Unknown U/G Line — ?UTL
- U/G Tank; Water, Gas, Oil
- Underground Storage Tank, Approx. Loc. — UST
- A/G Tank; Water, Gas, Oil
- Geoenvironmental Boring
- U/G Test Hole (S.U.E.*)
- Abandoned According to Utility Records — AATUR
- End of Information — E.O.I.

PROJECT REFERENCE NO.	SHEET NO.
17BP.8.R.77	IC-1

Location and Surveys

Prepared in the Office of: SUMMIT DESIGN AND ENGINEERING SERVICES
NC FIRM LICENSE Nos P-0339
504 Meadowlands Drive
Hillsborough, NC 27278
(919) 732-3883 - (919) 732-6676 (FAX)

SURVEY CONTROL SHEET 17BP.8.R.77

BL

POINT	DESC.	NORTH	EAST	ELEVATION	EL STATION	OFFSET
101	BL-101	667059.2160	1714871.0450	396.27	10+00.32	15.58 RT
102	BL-102	667330.1320	1714889.6790	387.79	12+70.42	12.09 LT
103	BL-103	667658.8970	1714948.9660	391.69	OUTSIDE PROJECT LIMITS	

BM1 ELEVATION = 379.87
N 667350.6050 E 1714816.8960
L STATION 12+77.75 87.34 LEFT
RR SPIKE IN BASE OF 15" ASH TREE

ROW MARKER / PERMANENT EASEMENT

ALIGN	STATION	OFFSET	NORTH	EAST
L	12+43.00	-30.00	667306.2592	1714867.2175
L	12+43.00	-35.00	667307.1336	1714862.2943
L	13+54.00	-35.00	667416.4445	1714881.8483
L	13+54.00	-45.00	667418.2063	1714872.0047
L	13+71.00	-45.00	667434.9404	1714874.9997
L	13+71.00	-35.00	667432.2977	1714889.7651
L	12+42.00	30.00	667294.7844	1714926.1185
L	12+42.00	37.00	667293.5609	1714933.0105
L	13+45.00	37.00	667394.9006	1714951.1365
L	13+45.00	43.00	667393.8435	1714957.0427
L	13+68.00	43.00	667416.4838	1714961.0947
L	13+68.00	30.00	667418.7741	1714948.2981

L

TYPE	STATION	NORTH	EAST
POT	10+00.00	667061.5186	1714855.6297
PC	11+65.32	667224.4800	1714883.4302
PT	12+58.02	667307.3827	1714899.3912
POT	16+04.22	667656.5799	1714960.3830

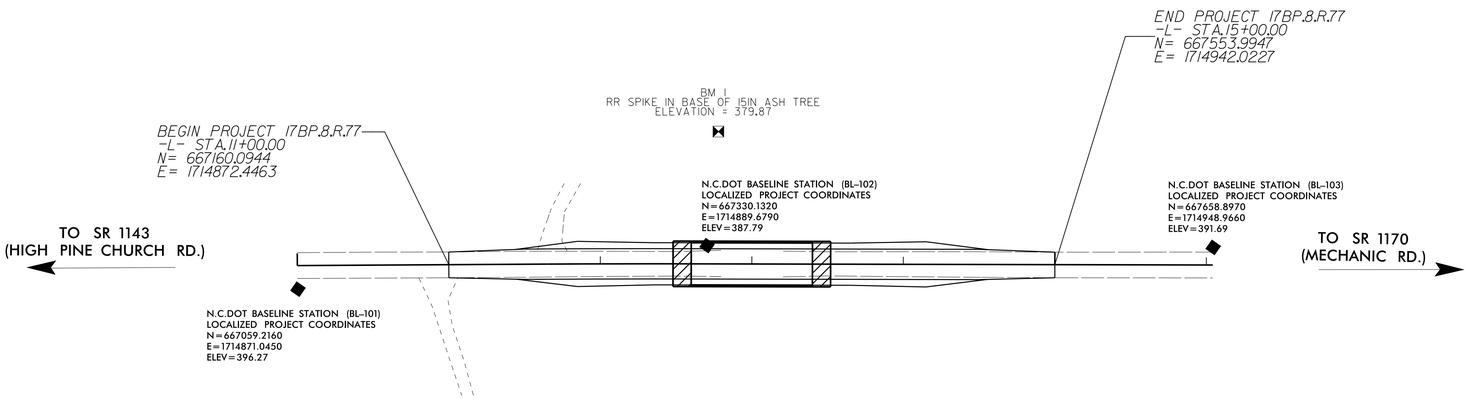

NOTES:

1. THE CONTROL DATA FOR THIS PROJECT CAN BE FOUND ELECTRONICALLY BY SELECTING PROJECT CONTROL DATA AT:
   HTTPS://CONNECT.NCDOT.GOV/RESOURCES/LOCATION/

   THE FILES TO BE FOUND ARE AS FOLLOWS:
   750232_LS_BASELINE.TXT

   SITE CALIBRATION INFORMATION HAS NOT BEEN PROVIDED FOR THIS PROJECT. IF FURTHER INFORMATION IS NEEDED, PLEASE CONTACT THE LOCATION AND SURVEYS UNIT.

⊗ INDICATES GEODETIC CONTROL MONUMENTS USED OR SET FOR HORIZONTAL PROJECT CONTROL BY THE NCDOT LOCATION AND SURVEYS UNIT.

PROJECT CONTROL ESTABLISHED USING GLOBAL POSITIONING SYSTEM.
NETWORK ESTABLISHED FROM EXISTING HARN MONUMENTATION
SEE GPS CALIBRATION SHEET FOR HORIZONTAL AND VERTICAL COORDINATE VALUES.

DATUM DESCRIPTION

THE LOCALIZED COORDINATE SYSTEM DEVELOPED FOR THIS PROJECT IS BASED ON THE STATE PLANE COORDINATES ESTABLISHED BY NCDOT FOR MONUMENT "750232-1"
WITH NAD 83/NA 2011 STATE PLANE GRID COORDINATES OF
NORTHING: 666528.6720(ft) EASTING: 1714747.4830(ft)
ELEVATION: 426.166(ft)
THE AVERAGE COMBINED GRID FACTOR USED ON THIS PROJECT (GROUND TO GRID) IS: 0.9998731232
THE N.C. LAMBERT GRID BEARING AND LOCALIZED HORIZONTAL GROUND DISTANCE FROM "750232-1" TO -L- STATION IS

ALL LINEAR DIMENSIONS ARE LOCALIZED HORIZONTAL DISTANCES
VERTICAL DATUM USED IS NAVD 88

NOTE: DRAWING NOT TO SCALE

REVISIONS

8/17/99

18-AUG-2015 11:42
N:\Project Future Jobs\2014 Projects\13-0219.03 Div 8 On Call Bridges\750232\LocationSurveys\232_LS_lc.dgn
$$$$USERNAME$$$$

DocuSign Envelope ID: 6C28DFD1-AEB9-4F32-97AA-3411A8BFC24A

6/2/99

PROJECT REFERENCE NO.	SHEET NO.
17BP.8.R.77	2A-1
ROADWAY DESIGN ENGINEER	PAVEMENT DESIGN ENGINEER

9/18/2015

NORTH CAROLINA PROFESSIONAL SEAL 034371 ENGINEER BRANDON W. JOHNSON

DocuSigned by: Brandon W. Johnson

Prepared in the Office of: SUMMIT DESIGN AND ENGINEERING SERVICES

NC FIRM LICENSE No: P-0339
504 Meadowlands Drive
Hillsborough, NC 27278
(919) 732-3883 - (919) 732-6676 (FAX)

PAVEMENT SCHEDULE

C1	PROP. APPROX. 2″ ASPHALT CONCRETE SURFACE COURSE, TYPE SF9.5A, AT AN AVERAGE RATE OF 110 LBS. PER SQ. YD. IN EACH OF TWO LAYERS.
C2	PROP. VARIABLE DEPTH ASPHALT CONCRETE SURFACE COURSE, TYPE SF9.5A, AT AN AVERAGE RATE OF 110 LBS. PER SQ. YD. PER 1″ DEPTH. TO BE PLACED IN LAYERS NOT TO EXCEED 1.5″ IN DEPTH.
D1	PROP. APPROX. 3″ ASPHALT CONCRETE INTERMEDIATE COURSE, TYPE I19.0B, AT AN AVERAGE RATE OF 342 LBS. PER SQ. YD.
D2	PROP. VAR. DEPTH ASPHALT CONCRETE INTERMEDIATE COURSE, TYPE I19.0B, AT AN AVERAGE RATE OF 114 LBS. PER SQ. YD. PER 1″ DEPTH. TO BE PLACED IN LAYERS NOT LESS THAN 2.5″ IN DEPTH OR GREATER THAN 4″ IN DEPTH.
E1	PROP. APPROX. 5.5″ ASPHALT CONCRETE BASE COURSE, TYPE B25.0B, AT AN AVERAGE RATE OF 627 LBS. PER SQ. YD.
E2	PROP. VARIABLE DEPTH ASPHALT CONCRETE BASE COURSE, TYPE B25.0B, AT AN AVERAGE RATE OF 114 LBS. PER SQ. YD. PER 1″ DEPTH. TO BE PLACED. IN LAYERS NOT LESS THAN 3″ IN DEPTH OR GREATER THAN 5.5″ IN DEPTH
T	EARTH MATERIAL
V	MILLING BITUMINOUS PAVEMENT.
U	EXISTING PAVEMENT
W	VARIABLE DEPTH ASPHALT PAVEMENT (SEE STANDARD WEDGING DETAIL ON THIS SHEET)

NOTE: PAVEMENT EDGE SLOPES ARE 1:1 UNLESS SHOWN OTHERWISE.

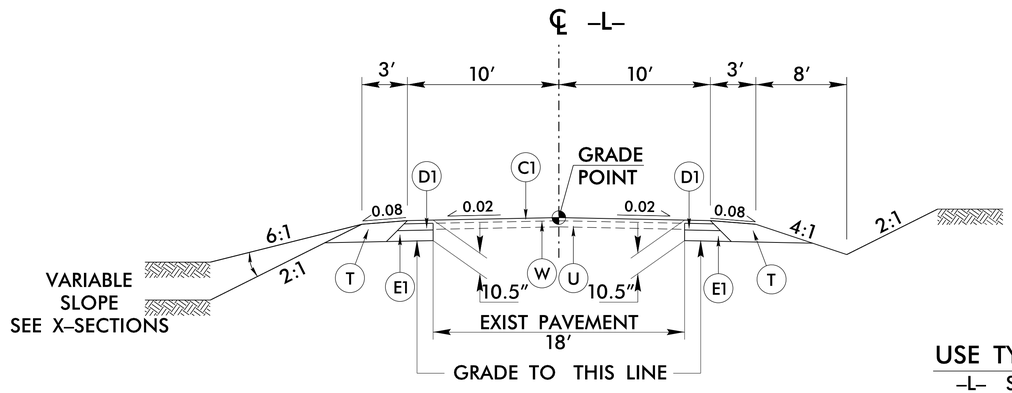

TYPICAL SECTION NO. 1

–L– (LASSITER MILL RD)

USE TYPICAL SECTION NO. 1

–L– STA 11+00.00 TO STA 11+85.00
–L– STA 14+15.00 TO STA 15+00.00

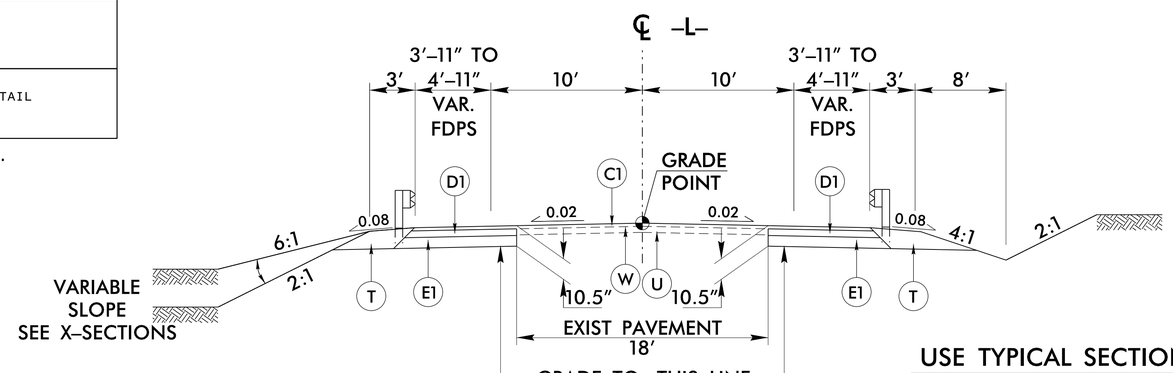

TYPICAL SECTION NO. 2

–L– (LASSITER MILL RD)

USE TYPICAL SECTION NO. 2

–L– STA 11+85.00 TO STA 12+10.00
–L– STA 13+90.00 TO STA 14+15.00

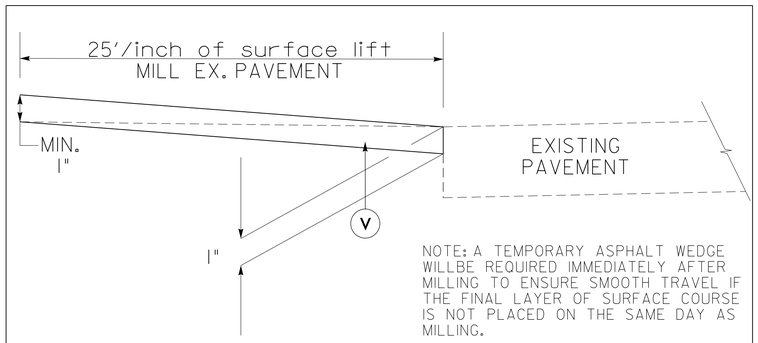

INCIDENTAL MILLING PAVEMENT KEY–IN DETAIL (TIE–IN)

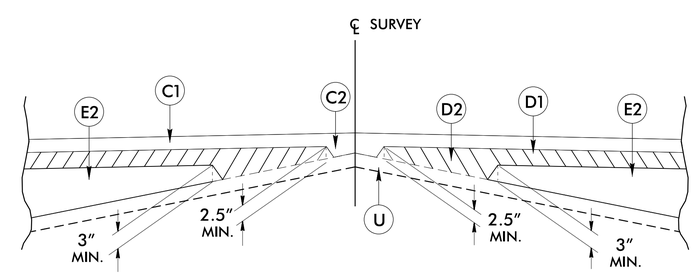

Detail Showing Method of Wedging

12:41PM 2015-05-07
J:\2015\15-007
SUMMIT
sheet1

DocuSign Envelope ID: 6C28DFD1-AEB9-4F32-97AA-3411A8BFC24A

PROJECT REFERENCE NO.	SHEET NO.
17BP.8.R.77	2A-2
ROADWAY DESIGN ENGINEER	PAVEMENT DESIGN ENGINEER

9/18/2015

NORTH CAROLINA PROFESSIONAL SEAL 034371 ENGINEER BRANDON W. JOHNSON

DocuSigned by: Brandon W. Johnson

Prepared in the Office of: SUMMIT DESIGN AND ENGINEERING SERVICES

NC FIRM LICENSE No: P-0339
504 Meadowlands Drive
Hillsborough, NC 27278
(919) 732-3883 - (919) 732-6676 (FAX)

PAVEMENT SCHEDULE	
C1	2″ SF9.5A
C2	VAR. SF9.5A
D1	3″ I19.0B
D2	VAR. I19.0B
E1	5.5″ B25.0B
E2	VAR. B25.0B
T	EARTH MATERIAL
U	EX. PAVEMENT
W	WEDGING

NOTE: PAVEMENT EDGE SLOPES ARE 1:1 UNLESS SHOWN OTHERWISE.

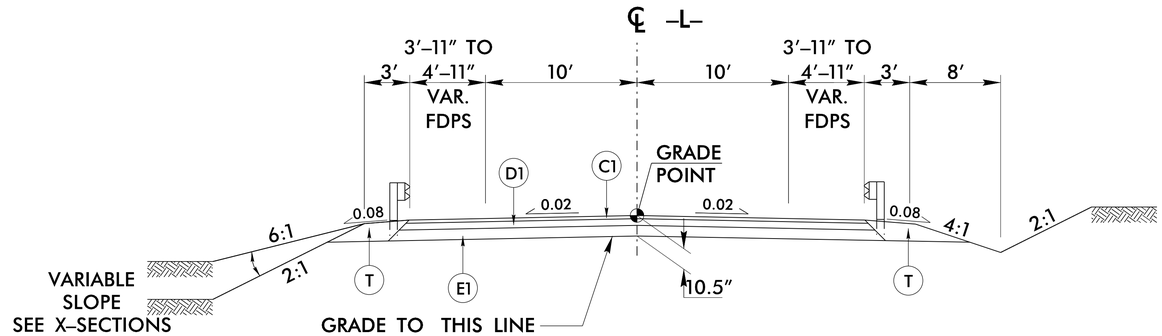

TYPICAL SECTION NO. 3

–L– (LASSITER MILL RD)

USE TYPICAL SECTION NO. 3

–L– STA 12+10.00 TO STA 12+58.88 (BEGIN BRIDGE)
–L– STA 13+41.13 (END BRIDGE) TO STA 13+90.00

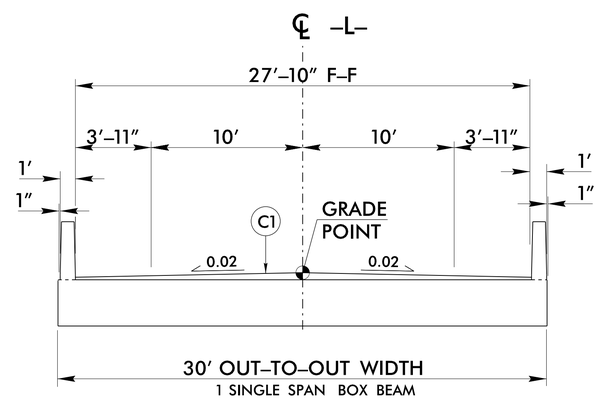

BRIDGE TYPICAL SECTION

FOR BRIDGE OVER HIGH PINE CREEK

USE BRIDGE TYPICAL SECTION

–L– STA 12+58.88 (BEGIN BRIDGE) TO STA 13+41.13 (END BRIDGE)

6/2/99
12-AUG-2015 15:07
s:\structures\17bp8r77_sht2a.dgn
spencer.martin

5/28/99

PROJECT REFERENCE NO.	SHEET NO.
I7BP.8.R.77	3B-1

Prepared in the Office of: SUMMIT DESIGN AND ENGINEERING SERVICES — NC FIRM LICENSE No: P-0339, 504 Meadowlands Drive, Hillsborough, NC 27278, (919) 732-3883 - (919) 732-6676 (FAX)

STATE OF NORTH CAROLINA
DIVISION OF HIGHWAYS

APPROXIMATE QUANTITIES ONLY. UNCLASSIFIED EXCAVATION, BORROW EXCAVATION, SHOULDER BORROW, FINE GRADING, CLEARING AND GRUBBING, BREAKING OF EXISTING PAVEMENT AND REMOVAL OF EXISTING PAVEMENT WILL BE PAID FOR AT THE LUMP SUM PRICE FOR "GRADING".

"N" = DISTANCE FROM EDGE OF LANE TO FACE OF GUARDRAIL.
TOTAL SHOULDER WIDTH = DISTANCE FROM EDGE OF TRAVEL LANE TO SHOULDER BREAK POINT.
FLARE LENGTH = DISTANCE FROM LAST SECTION OF PARALLEL GUARDRAIL TO END OF GUARDRAIL.
W = TOTAL WIDTH OF FLARE FROM BEGINNING OF TAPER TO END OF GUARDRAIL.
G = GATING IMPACT ATTENUATOR TYPE 350
NG = NON-GATING IMPACT ATTENUATOR TYPE 350

GUARDRAIL SUMMARY

SURVEY LINE	BEG. STA.	END STA.	LOCATION	LENGTH			WARRANT POINT		"N" DIST. FROM E.O.L.	TOTAL SHOUL. WIDTH	FLARE LENGTH		W		ANCHORS									IMPACT ATTENUATOR TYPE 350			SINGLE FACED GUARDRAIL	REMOVE EXISTING GUARDRAIL	REMOVE AND STOCKPILE EXISTING GUARDRAIL	REMARKS
				STRAIGHT	SHOP CURVED	DOUBLE FACED	APPROACH END	TRAILING END			APPROACH END	TRAILING END	APPROACH END	TRAILING END	XI MOD	TYPE-III	GRAU 350 TL-3	M-350	XIII	CAT-1	VI MOD	BIC	AT-1	EA	G	NG				
-L-	11+83.88	12+58.88	RT	6.25			12+58.88	N/A	3.92	6.92	50		1			1	1													
-L-	11+83.88	12+58.88	LT	6.25			N/A	12+58.88	3.92	6.92		50		1		1	1													
-L-	13+41.13	14+16.13	RT	6.25			N/A	13+41.13	3.92	6.92		50		1		1	1													
-L-	13+41.13	14+16.13	LT	6.25			13+41.13	N/A	3.92	6.92	50		1			1	1													
TOTALS				25												4	4													

LIST OF PIPES, ENDWALLS, ETC. (FOR PIPES 48" & UNDER)

STATION	LOCATION (LT,RT, OR CL)	STRUCTURE NO. FROM	STRUCTURE NO. TO	TOP ELEVATION	INVERT ELEVATION	INVERT ELEVATION	SLOPE CRITICAL	DRAINAGE PIPE (RCP, CSP, CAAP, HDPE, or PVC) 8"	12"	15"	18"	24"	30"	36"	42"
-L- 13+62.00	RT	0401													
-L- 13+62.00	RT	0401	0402												
-L- 13+62.00	LT	0403													
-L- 13+62.00	LT	0403	0404												
TOTALS															

STATION	C.S. PIPE (UNLESS NOTED OTHRWISE) 12" .064	15" .064	18" .064	24" .064	24"	30" .079	30"	36" .079	36"	42" .109	42"	48" .109	48"	CLASS III R.C. PIPE (UNLESS OTHERWISE NOTED) 12"	15"	18"	24"	30"	36"	42"	48"
-L- 13+62.00																					
-L- 13+62.00		20																			
-L- 13+62.00																					
-L- 13+62.00		16																			
TOTALS		36																			

STATION	15" SIDE DRAIN PIPE	18" SIDE DRAIN PIPE	24" SIDE DRAIN PIPE	ENDWALLS STD. 838.01, STD. 838.11 OR STD. 838.80 (UNLESS NOTED OTHERWISE) CU. YDS. R.C.P.	C.S.P.	QUANTITIES FOR DRAINAGE STRUCTURES * TOTAL L.F. FOR PAY QUANTITY SHALL BE COL. 'A' + (1.3 X COL.'B') PER EACH (0' THRU 5.0')	LIN. *FT. A 5.0' THRU 10.0'	B 10.0' AND ABOVE	C.B. STD. 840.01 OR STD. 840.02	FRAME, GRATES AND HOOD STANDARD 840.03 TYPE OF GRATE E	F	G		D.I. STD. 840.14 OR STD. 840.15	D.I. FRAME & GRATE STD. 840.16	G.D.I. TYPE "A" STD. 840.17 OR 840.26	G.D.I. TYPE "B" STD. 840.18 OR 840.27	G.D.I. TYPE "D" STD. 840.19 OR 840.28	G.D.I. FRAME WITH GRATE STD. 840.22	G.D.I. FRAME WITH TWO GRATES STD. 840.22	G.D.I. (N.S.) FRAME WITH GRATE STD. 840.24	G.D.I. (N.S.) FRAME WITH TWO GRATES STD. 840.24	J.B. STD. 840.31 OR 840.32	T.B.DI. STD. 840.35 OR 840.36							CORR. STEEL ELBOWS NO. & SIZE	CONC. COLLARS CL. "B" C.Y. STD 840.72	CONC. & BRICK PIPE PLUG, C.Y. STD. 840.71	PIPE REMOVAL LIN.FT.	REMARKS
-L- 13+62.00						1																		1												
-L- 13+62.00																															2-15"				
-L- 13+62.00						1																		1											
-L- 13+62.00																															2-15"				
TOTALS						2																		2							4-15"				

ABBREVIATIONS

C.B.	CATCH BASIN
N.D.I.	NARROW DROP INLET
D.I.	DROP INLET
G.D.I.	GRATED DROP INLET
G.D.I. (N.S.)	GRATED DROP INLET (NARROW SLOT)
J.B.	JUNCTION BOX
M.H.	MANHOLE
T.B.D.I.	TRAFFIC BEARING DROP INLET
T.B.J.B.	TRAFFIC BEARING JUNCTION BOX

SUMMARY OF EARTHWORK
IN CUBIC YARDS

LOCATION	UNCLASSIFIED EXCAVATION	UNDERCUT	EMBT+20%	BORROW	WASTE
-L- LT STA. 11+00.00 TO 12+58.88	11		272	261	
-L- LT STA. 13+41.13 TO 15+00.00	15		155	140	
TOTAL	26		427	401	
LOSS DUE TO C & G			212	212	
ESTIMATED SHOULDER CONSTRUCTION			84	84	
PROJECT TOTALS	26		724	698	
5% TO REPLACE TOP SOIL				35	
GRAND TOTALS	26		724	733	
SAY	30		725	735	

PARCEL INDEX

PARCEL NO.	OWNER	TYPE	AREA (SF)	AREA (AC)
1	GRACE THORNBURG DB 319 PG 16	TCE	644.42	0.015
1	GRACE THORNBURG DB 319 PG 16	PDE	809.72	0.019
2	JAMES CLODFELTER DB 2168 PG 1253	TCE	840.71	0.019
2	JAMES CLODFELTER DB 2168 PG 1253	PDE	1020.19	0.023

12-AUG-2015 15:07
232_Rdy_sum.dgn
spencer.merritt

DocuSign Envelope ID: 6C28DFD1-AEB9-4F32-97AA-3411A8BFC24A

8/17/99

REVISIONS

PROJECT REFERENCE NO.	SHEET NO.
17BP.8.R.77	4
R/W SHEET NO.	

ROADWAY DESIGN ENGINEER 9/18/2015
NORTH CAROLINA PROFESSIONAL SEAL 034371 ENGINEER BRANDON W. JOHNSON
Brandon W. Johnson

HYDRAULICS ENGINEER 9/18/2015
NORTH CAROLINA PROFESSIONAL SEAL 9334 ENGINEER W. HENRY WELLS, JR.
W. Henry Wells Jr

Prepared in the Office of: SUMMIT DESIGN AND ENGINEERING SERVICES
NC FIRM LICENSE: C-0829 504 Meadowlands Drive Hillsborough, NC 27278 (919) 732-3883 (919) 732-6676 (FAX)

Prepared in the Office of: SUNGATE DESIGN GROUP, P.A.
NC FIRM LICENSE: C-0339 P-0339 95 Jones Franklin Road Raleigh, NC 27606 (919) 859-2243 (919) 859-6258 (FAX)

-L-
PI Sta 12+11.67
Δ = 0° 27' 57.3" (RT)
D = 0° 30' 09.3"
L = 92.70'
T = 46.35'
R = 11,400.00'
SE = NC
DS = 55 mph

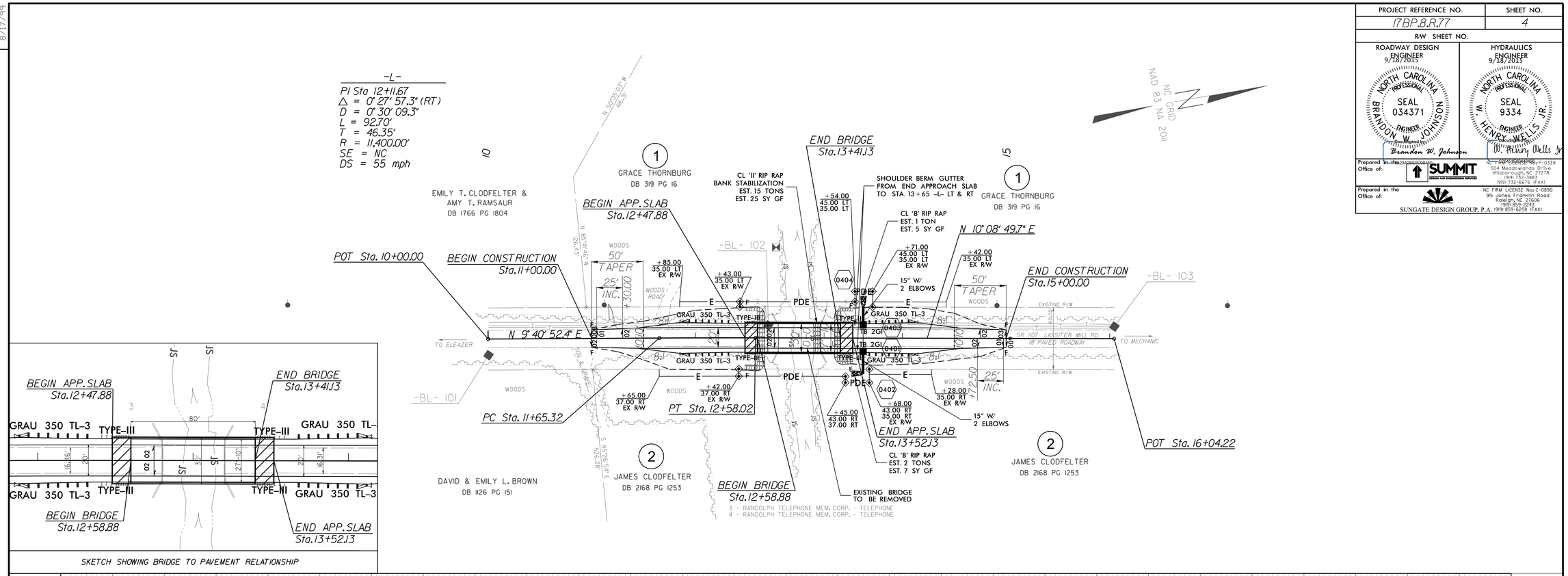

SKETCH SHOWING BRIDGE TO PAVEMENT RELATIONSHIP

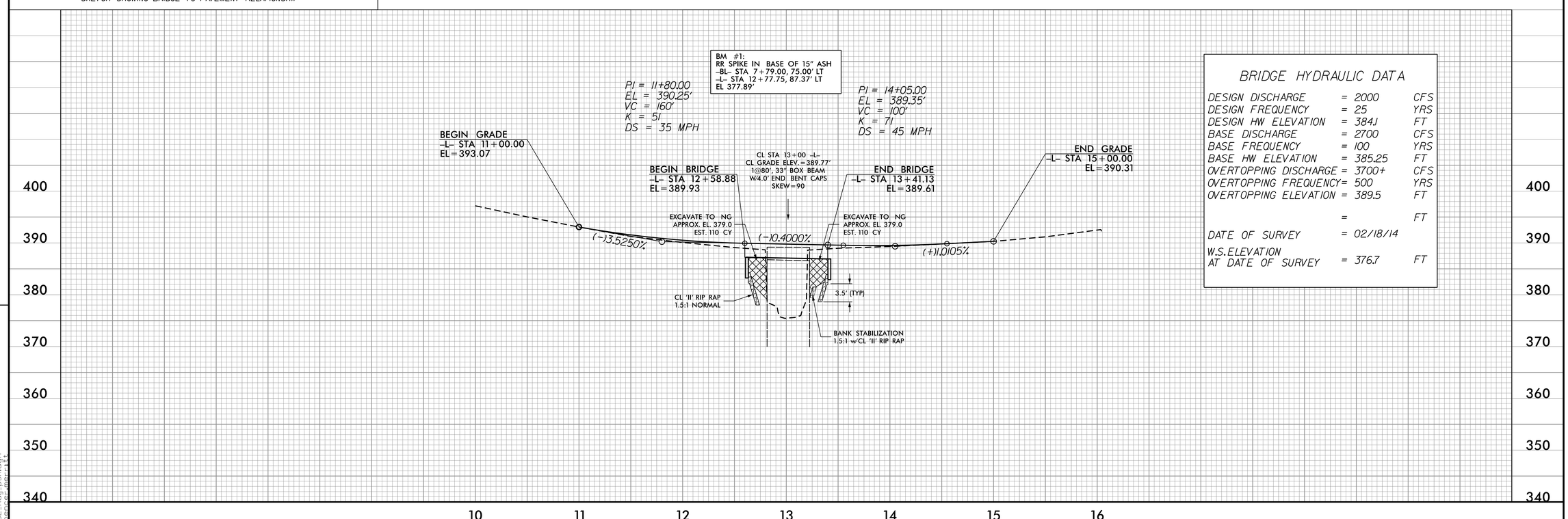

BRIDGE HYDRAULIC DATA

DESIGN DISCHARGE	= 2000	CFS
DESIGN FREQUENCY	= 25	YRS
DESIGN HW ELEVATION	= 384.1	FT
BASE DISCHARGE	= 2700	CFS
BASE FREQUENCY	= 100	YRS
BASE HW ELEVATION	= 385.25	FT
OVERTOPPING DISCHARGE	= 3700+	CFS
OVERTOPPING FREQUENCY	= 500	YRS
OVERTOPPING ELEVATION	= 389.5	FT
	=	FT
DATE OF SURVEY	= 02/18/14	
W.S.ELEVATION AT DATE OF SURVEY	= 376.7	FT

18-SEP-2015 08:58

DocuSign Envelope ID: 6C28DFD1-AEB9-4F32-97AA-3411A8BFC24A

STATE OF NORTH CAROLINA
DIVISION OF HIGHWAYS

TRANSPORTATION MANAGEMENT PLAN

RANDOLPH COUNTY

(BRIDGE NO. 750232)

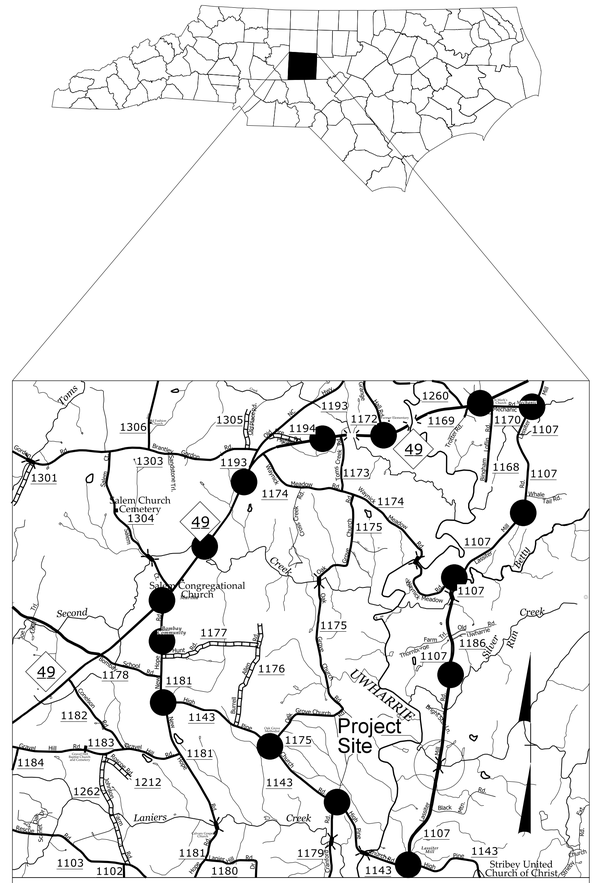

VICINITY MAP

DETOUR ROUTE

INDEX OF SHEETS

SHEET NO.	TITLE
TMP-1	TITLE SHEET, VICINITY MAP AND INDEX OF SHEETS
TMP-1A	TRANSPORTATION OPERATIONS PLAN: (MANAGEMENT STRATEGIES, GENERAL NOTES AND LOCAL NOTES)
TMP-2	PHASE 1 DETAIL DRAWING
TMP-3	DETOUR
TMP-4	SIGN DESIGN

ROADWAY STANDARD DRAWINGS

THE FOLLOWING ROADWAY STANDARDS AS SHOWN IN "ROADWAY STANDARD DRAWINGS" - PROJECT SERVICES UNIT - N.C. DEPARTMENT OF TRANSPORTATION - RALEIGH, N.C., DATED JANUARY 2012 ARE APPLICABLE TO THIS PROJECT AND BY REFERENCE HEREBY ARE CONSIDERED A PART OF THESE PLANS:

STD. NO.	TITLE
1101.03	TEMPORARY ROAD CLOSURES

LEGEND

- DIRECTION OF TRAFFIC FLOW
- EXIST. PVMT.
- NORTH ARROW
- PROPOSED PVMT.
- WORK AREA
- BARRICADE (TYPE III)
- STATIONARY SIGN

SHEET NO.
TMP-1

17BP.8.R.77

TIP PROJECT:

WORK ZONE SAFETY & MOBILITY
"from the MOUNTAINS to the COAST"

N.C.D.O.T. WORK ZONE TRAFFIC CONTROL
1561 MAIL SERVICE CENTER (MSC) RALEIGH, NC 27699-1561
750 N. GREENFIELD PARKWAY, GARNER, NC 27529 (DELIVERY)
PHONE: (919) 773-2800 FAX: (919) 771-2745

J. S. BOURNE, P.E. — STATE TRAFFIC MANAGEMENT ENGINEER
T.N. PARROTT, P.E. — TRAFFIC CONTROL PROJECT ENGINEER
B.W. JOHNSON, P.E. — TRAFFIC CONTROL PROJECT DESIGN ENGINEER
J.A. CROUSE, P.E. — TRAFFIC CONTROL DESIGN ENGINEER

DIVISION OF HIGHWAYS · STATE OF NORTH CAROLINA · DEPARTMENT OF TRANSPORTATION · WORK ZONE TRAFFIC CONTROL

Prepared in the Office of:
SUMMIT DESIGN AND ENGINEERING SERVICES
NC FIRM LICENSE No: P-0339
504 Meadowlands Drive
Hillsborough, NC 27278
(919) 732-3883
(919) 732-6676 (FAX)

APPROVED: DocuSigned by: Brandon W. Johnson
DATE: 9/18/2015

SEAL

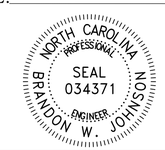

17-SEP-2015 13:54
750232_TC_TMP_1.dgn
jessica.puszynski

DocuSign Envelope ID: 6C28DFD1-AEB9-4F32-97AA-3411A8BFC24A

Prepared in the Office of: SUMMIT DESIGN AND ENGINEERING SERVICES
NC FIRM LICENSE No: P-0339
504 Meadowlands Drive
Hillsborough, NC 27278
(919) 732-3883
(919) 732-6676 (FAX)

PROJ. REFERENCE NO.	SHEET NO.
17BP.8.R.77	TMP-1A

MANAGEMENT STRATEGIES

BRIDGE #232 ON SR 1107 (LASSITER MILL RD.) REPLACEMENT TO BE PERFORMED UNDER ROAD CLOSURE WITH AN INTERMEDIATE CONTRACT TIME.

LOCAL ACCESS TO ALL RESIDENCES AND BUSINESSES WILL BE MAINTAINED BETWEEN CLOSURE POINTS AT ALL TIMES DURING CONSTRUCTION.

PHASING

INTERMEDIATE CONTRACT TIME: 120 DAYS

PROVIDE ENGINEER A THIRTY (30) DAY WRITTEN NOTICE PRIOR TO ROAD CLOSURE

STEP 1:

IMPLEMENT OFF–SITE DETOUR AND ROAD CLOSURE FOR SR 1107 AT BRIDGE #232 AS SHOWN ON SHEET TMP–2 AND TMP–3 AND IN ACCORDANCE WITH THE GENERAL NOTES. COVER ALL ADVANCE WARNING SIGNS AND DETOUR SIGNS PRIOR TO ROAD CLOSURE.

STEP 2:

WITH SR 1107 CLOSED TO TRAFFIC PERFORM ALL BRIDGE REPLACEMENT OPERATIONS. PRIOR TO OPENING THE ROADWAY TO TRAFFIC, PLACE FINAL PAVEMENT MARKINGS.

STEP 3:

UPON COMPLETION OF BRIDGE WORK REMOVE THE ROAD CLOSURE AND DETOUR SIGNS AND OPEN SR 1107 TO TRAFFIC.

LOCAL NOTES

NOTIFY RANDOLPH COUNTY SCHOOLS AT (336) 318–6100 AT LEAST ONE MONTH PRIOR TO ROAD CLOSURE.

NOTIFY RANDOLPH COUNTY EMERGENCY SERVICES AT (336) 318–6911 AT LEAST ONE MONTH PRIOR TO ROAD CLOSURE.

GENERAL NOTES

CHANGES MAY BE REQUIRED WHEN PHYSICAL DIMENSION IN THE DETAIL DRAWINGS, STANDARD DETAILS AND ROADWAY DETAILS ARE NOT ATTAINABLE TO MEET FIELD CONDITIONS, OR RESULT IN DUPLICATE OR UNDESIRED OVERLAPPING OF DEVICES. MODIFICATION MAY INCLUDE: MOVING, SUPPLEMENTING, COVERING OR REMOVAL OF DEVICES, AS DIRECTED BY THE ENGINEER.

THE FOLLOWING GENERAL NOTES APPLY AT ALL TIMES FOR THE DURATION OF THE CONSTRUCTION PROJECT, EXCEPT WHEN OTHERWISE NOTED IN THE PLAN, OR DIRECTED BY THE ENGINEER.

TRAFFIC PATTERN ALTERATIONS

1. NOTIFY THE ENGINEER ONE MONTH PRIOR TO ANY TRAFFIC PATTERN ALTERATION.

SIGNING

2. PROVIDE SIGNING AND DEVICES REQUIRED TO CLOSE THE ROAD ACCORDING TO THE ROADWAY STANDARD DRAWINGS AND TMP SHEETS.

3. PROVIDE SIGNING REQUIRED FOR THE OFF–SITE DETOUR ROUTE AS SHOWN IN THE TMP SHEETS. COVER OR REMOVE SIGNS WHEN DETOUR IS NOT IN OPERATION.

4. ENSURE ALL NECESSARY SIGNING IS IN PLACE PRIOR TO ALTERING ANY TRAFFIC PATTERN.

TRAFFIC CONTROL DEVICES

PLACE TYPE III BARRICADES, WITH "ROAD CLOSED" SIGN R11–2 ATTACHED, OF SUFFICIENT LENGTH TO CLOSE ENTIRE ROADWAY.

PAVEMENT MARKINGS AND MARKERS

1. INSTALL PAVEMENT MARKINGS AND PAVEMENT MARKERS ON THE FINAL SURFACE, AS SHOWN IN THE PAVEMENT MARKING PLAN.

2. TIE PROPOSED PAVEMENT MARKING LINES TO EXISTING PAVEMENT MARKING LINES.

APPROVED: DocuSigned by: Brandon W. Johnson 9/18/2015 DATE:

SEAL

NORTH CAROLINA PROFESSIONAL SEAL 034371 ENGINEER BRANDON W. JOHNSON

DIVISION OF HIGHWAYS STATE OF NORTH CAROLINA DEPARTMENT OF TRANSPORTATION WORK ZONE TRAFFIC CONTROL

TRANSPORTATION OPERATIONS PLAN

17-SEP-2015 13:55
750232_TC_TMP_1A.dgn
jessica.puszynski

DocuSign Envelope ID: 6C28DFD1-AEB9-4F32-97AA-3411A8BFC24A

Prepared in the Office of: SUMMIT DESIGN AND ENGINEERING SERVICES
NC FIRM LICENSE No: P-0339
504 Meadowlands Drive
Hillsborough, NC 27278
(919) 732-3883
(919) 732-6676 (FAX)

PROJ. REFERENCE NO.	SHEET NO.
17BP.8.R.77	TMP-2

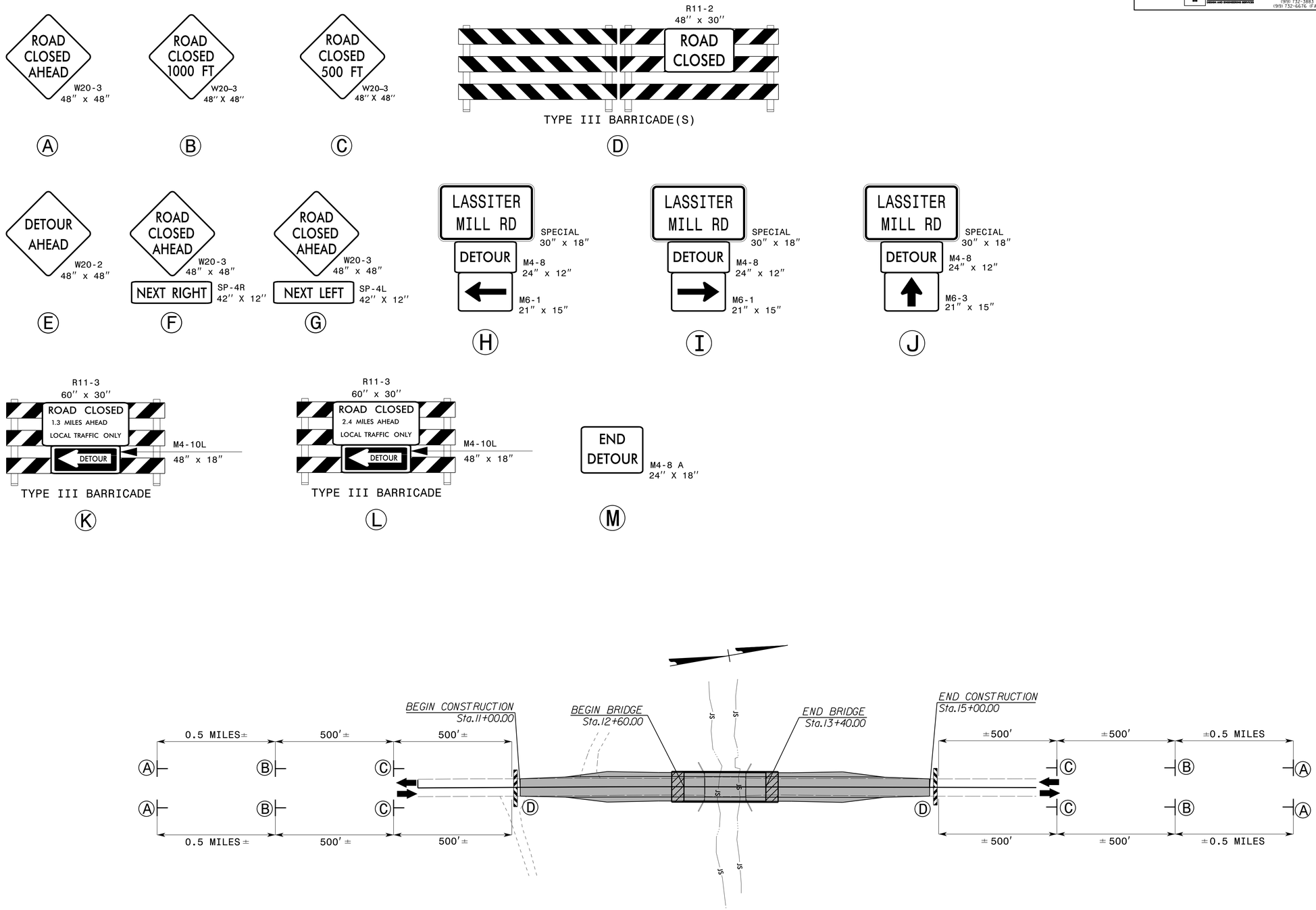

APPROVED: DocuSigned by: Brandon W. Johnson DATE: 9/18/2015

SEAL

NORTH CAROLINA PROFESSIONAL SEAL 034371 ENGINEER BRANDON W. JOHNSON

DIVISION OF HIGHWAYS STATE OF NORTH CAROLINA DEPARTMENT OF TRANSPORTATION WORK ZONE TRAFFIC CONTROL

PHASE 1 DETAIL DRAWING

17-SEP-2015 13:56
N:\Infrastructure Jobs\2014 Projects\13-0219.03 Div 8 On Call Bridges\750232\Traffic\TrafficControl\TCP\750232_TC_TMP_2.dgn
$$$$USERNAME$$$$

DocuSign Envelope ID: 6C28DFD1-AEB9-4F32-97AA-3411A8BFC24A

Prepared in the Office of: SUMMIT DESIGN AND ENGINEERING SERVICES
NC FIRM LICENSE No: P-0339
504 Meadowlands Drive
Hillsborough, NC 27278
(919) 732-3883
(919) 732-6676 (FAX)

PROJ. REFERENCE NO.	SHEET NO.
17BP.8.R.77	TMP-3

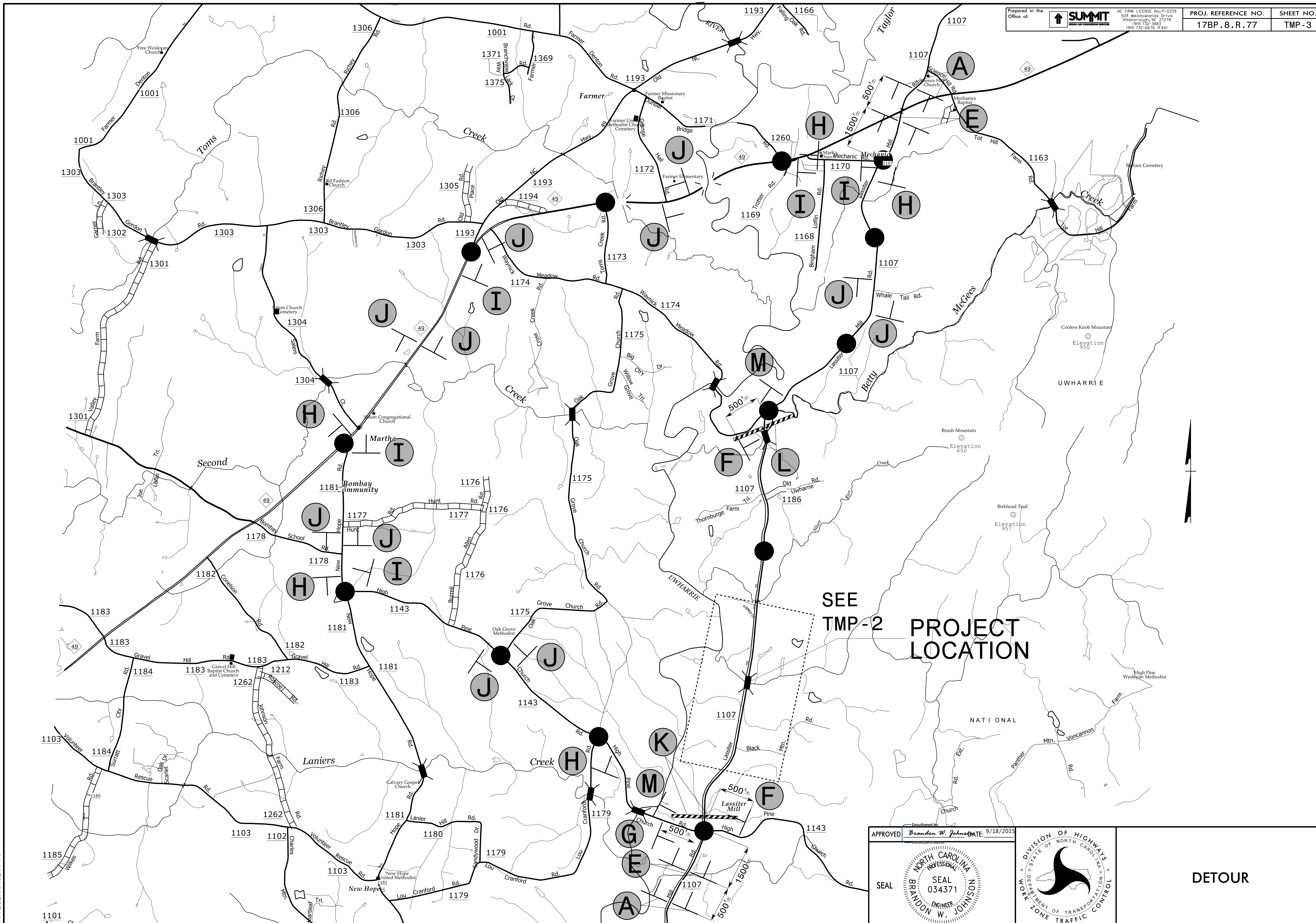

APPROVED: Brandon W. Johnson DATE: 9/18/2015

SEAL

NORTH CAROLINA PROFESSIONAL SEAL 034371 ENGINEER BRANDON W. JOHNSON

DIVISION OF HIGHWAYS STATE OF NORTH CAROLINA DEPARTMENT OF TRANSPORTATION WORK ZONE TRAFFIC CONTROL

DETOUR

17-SEP-2015 13:58
N:\Infrastructure Jobs\2014 Projects\13-0219.103 Div 8 On Call Bridges\750232\Traffic\TrafficControl\TCP\750232_TC_TMP_3.dgn
$$$$USERNAME$$$$

DocuSign Envelope ID: 6C28DFD1-AEB9-4F32-97AA-3411A8BFC24A

Prepared in the Office of: SUMMIT DESIGN AND ENGINEERING SERVICES
NC FIRM LICENSE No: P-0339
504 Meadowlands Drive
Hillsborough, NC 27278
(919) 732-3883
(919) 732-6676 (FAX)

PROJ. REFERENCE NO.	SHEET NO.
17BP.8.R.77	TMP-4

SIGN NUMBER: LASSITER MILL RD
TYPE: STATIONARY
QUANTITY: SEE PLANS

BACKG COLOR: Fluorescent Orange
COPY COLOR: Black

SIGN WIDTH: 2′-6″
HEIGHT: 1′-6″
TOTAL AREA: 3.75 SF

BORDER TYPE: FLUSH
RECESS: 0.47″
WIDTH: 0.63″
RADII: 1.50″

NO. Z BARS: N/A
LENGTH: N/A

SYMBOL	X	Y	WID	HT

MAT'L: 0.063″ ALUMINUM

DESIGN BY: JAC
PROJECT ID: 17BP.8.R.77
CHECKED BY:
DIV: 8
DATE: April 2014

USE NOTES: 1,2

1. Legend and border shall be direct applied black non-reflective sheeting.
2. Background shall be NC GRADE B fluorescent orange retroreflective sheeting.

BORDER
R=1.50"
TH=0.63"
IN=0.47"

Spacing Factor is 1 unless specified otherwise

LETTER POSITIONS

Letter spacings are to start of next letter

																										Series/Size Text Length
	L	A	S	S	I	T	E	R																		C 2000
5.2	2.2	2.8	2.7	2.7	1.5	2.3	2.7	2.7	5.2																	19.6
	M	I	L	L		R	D																			C 2000
5.6	3.1	1.4	2.6	2.5	4.0	2.5	2.7	5.6																		18.8

FILENAME: 750232_TC_TMP_4.dgn

SUMMIT DESIGN & ENGINEERING SIGN DETAIL

APPROVED DocuSigned by: Brandon W. Johnson DATE: 9/18/2015

SEAL

NORTH CAROLINA PROFESSIONAL SEAL 034371 ENGINEER BRANDON W. JOHNSON

DIVISION OF HIGHWAYS STATE OF NORTH CAROLINA DEPARTMENT OF TRANSPORTATION WORK ZONE TRAFFIC CONTROL

SIGN DESIGN

17-SEP-2015 13:59
N:\Infrastructure Jobs\2014 Projects\3-0219\03 Div 8 On Call Bridges\750232\Traffic\TrafficControl\TCP\750232_TC_TMP_4.dgn
$$$$USERNAME$$$$

DocuSign Envelope ID: 6C28DFD1-AEB9-4F32-97AA-3411A8BFC24A

TIP PROJECT: 17BP.8.R.77

CONTRACT:

STATE OF NORTH CAROLINA
DIVISION OF HIGHWAYS

TIP NO.	SHEET NO.
17BP.8.R.77	PMP–1

APPROVED: DocuSigned by: Brandon W. Johnson 6A29A2BE0C9B45E...

DATE: 9/18/2015

SEAL

NORTH CAROLINA PROFESSIONAL SEAL 034371 ENGINEER BRANDON W. JOHNSON

RANDOLPH COUNTY

LOCATION: BRIDGE NO. 750232 ON SR 1107 (LASSITER MILL ROAD) OVER HANNAH'S CREEK.

TYPE OF WORK: GRADING, DRAINAGE, PAVING AND STRUCTURE.

ROADWAY STANDARD DRAWING

THE FOLLOWING ROADWAY STANDARDS AS APPEAR IN "ROADWAY STANDARD DRAWINGS" - PROJECT SERVICES UNIT - N.C. DEPARTMENT OF TRANSPORTATION - RALEIGH, N.C., DATED JANUARY 2012 ARE APPLICABLE TO THIS PROJECT AND BY REFERENCE HEREBY ARE CONSIDERED A PART OF THESE PLANS:

STD. NO.	TITLE
1205.01	PAVEMENT MARKINGS - LINE TYPES AND OFFSETS
1205.02	PAVEMENT MARKINGS - TWO-LANE AND MULTILANE ROADWAYS
1205.04	PAVEMENT MARKINGS - INTERSECTIONS
1205.08	PAVEMENT MARKINGS - SYMBOLS AND WORD MESSAGES

PAVEMENT MARKING SCHEDULE

SYMBOL	DESCRIPTION	QUANTITY
PAINT (4", 2 COATS) PI	YELLOW DOUBLE CENTER	1600 LF
PAINT (4", 2 COATS) PA	WHITE EDGE LINE	1600 LF

GENERAL NOTES

THE FOLLOWING GENERAL NOTES APPLY AT ALL TIMES FOR THE DURATION OF THE CONSTRUCTION PROJECT, EXCEPT WHEN OTHERWISE NOTED IN THE PLAN OR DIRECTED BY THE ENGINEER.

A) INSTALL PAVEMENT MARKINGS AND PAVEMENT MARKERS ON THE FINAL SURFACE AS FOLLOWS:

ROAD NAME	MARKING	MARKER
LASSITER MILL ROAD	PAINT	NONE

B) TIE PROPOSED PAVEMENT MARKING LINES TO EXISTING PAVEMENT MARKING LINES.

C) REMOVE/REPLACE ANY CONFLICTING/DAMAGED PAVEMENT MARKINGS AND MARKERS.

D) PASSING ZONES WILL BE DETERMINED IN THE FIELD AND MUST BE APPROVED BY THE ENGINEER.

PAVEMENT MARKING DETAIL

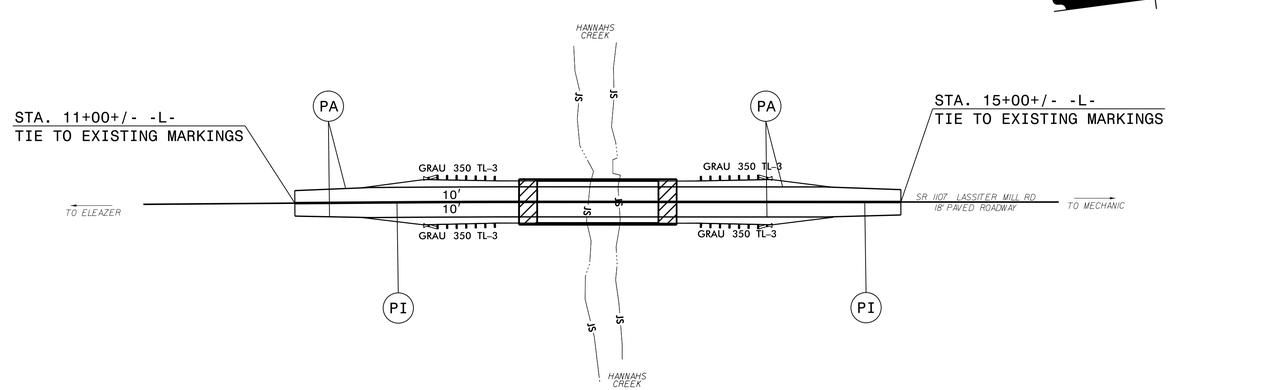

Prepared in the Office of:
SUMMIT DESIGN AND ENGINEERING SERVICES
NC FIRM LICENSE No: P–0339
504 Meadowlands Drive
Hillsborough, NC 27278
(919) 732–3883
(919) 732–6676 (FAX)
TRACY N. PARROTT, PE — PROJECT ENGINEER
BRANDON W. JOHNSON, PE — PROJECT DESIGN ENGINEER

STATE OF NORTH CAROLINA DEPARTMENT OF TRANSPORTATION

INDEX

PMP-1 PAVEMENT MARKING PLAN TITLE, SCHEDULE, QUANTITIES AND PAVEMENT MARKING DETAIL.

17-SEP-2015 14:05
N:\Infrastructure Jobs\2014 Projects\13-0219.103 Div 8 On CallBridges\750232\Traffic\TrafficControl\TCP\750232_TC_PMP_01.dgn
$$$$USERNAME$$$$

TIP PROJECT: 17BP.8.R.77

STATE	STATE PROJECT REFERENCE NO.	SHEET NO.	TOTAL SHEETS
N.C.	17BP.8.R.77	EC-1	

STATE PROJ. NO.	F.A. PROJ. NO.	DESCRIPTION

See Sheet 1-A For Index of Sheets
See Sheet 1-B For Conventional Symbols
See Sheet 1-C For Survey Control Sheet

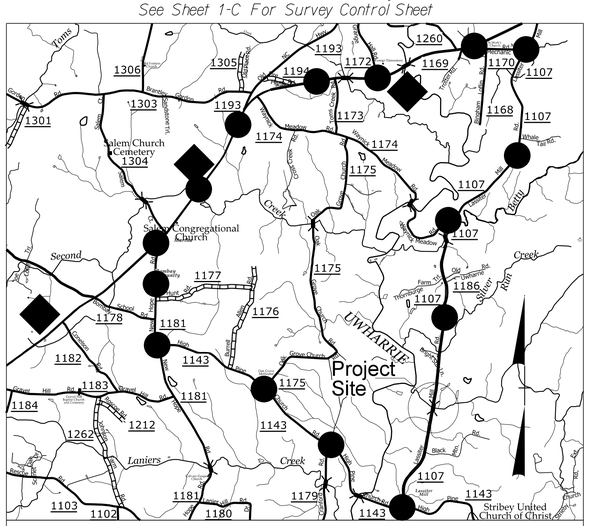

VICINITY MAP

THIS PROJECT IS NOT WITHIN ANY MUNICIPAL BOUNDARIES.
● DETOUR ROUTE

STATE OF NORTH CAROLINA
DIVISION OF HIGHWAYS

PLAN FOR PROPOSED
HIGHWAY EROSION CONTROL

RANDOLPH COUNTY

LOCATION: BRIDGE NO. 750232 ON SR 1107 (LASSITER MILL RD) OVER HANNAHS CREEK.

TYPE OF WORK: GRADING, DRAINAGE, PAVING AND STRUCTURE.

NC GRID NAD 83 NA 2011

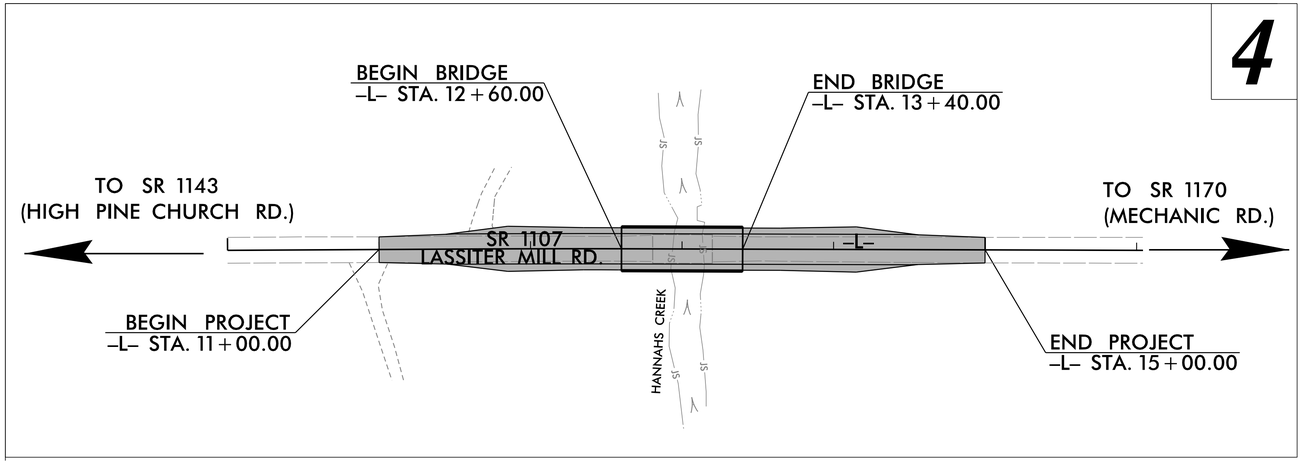

EROSION AND SEDIMENT CONTROL MEASURES

Std. #	Description	Symbol
1630.03	Temporary Silt Ditch	TSD
1630.05	Temporary Diversion	TD
1605.01	Temporary Silt Fence	
1606.01	Special Sediment Control Fence	
1622.01	Temporary Berms and Slope Drains	
1630.02	Silt Basin Type B	
1633.01	Temporary Rock Silt Check Type-A	
	Temporary Rock Silt Check Type-A with Matting and Polyacrylamide (PAM)	
1633.02	Temporary Rock Silt Check Type-B	
	Wattle/ Coir Fiber Wattle	EW CFW
	Wattle/ Coir Fiber Wattle with Polyacrylamide (PAM)	
1634.01	Temporary Rock Sediment Dam Type-A	
1634.02	Temporary Rock Sediment Dam Type-B	
1635.01	Rock Pipe Inlet Sediment Trap Type-A	
1635.02	Rock Pipe Inlet Sediment Trap Type-B	
1630.04	Stilling Basin	
1630.06	Special Stilling Basin	
	Rock Inlet Sediment Trap:	
1632.01	Type A	A
1632.02	Type B	B
1632.03	Type C	C
	Skimmer Basin	
	Tiered Skimmer Basin	
	Infiltration Basin	

THIS PROJECT CONTAINS EROSION CONTROL PLANS FOR CLEARING AND GRUBBING PHASE OF CONSTRUCTION.

BRIAN N. ELAM, PE
LEVEL III NAME

3195
LEVEL III CERTIFICATION NO.

GRAPHIC SCALE

40 20 0 40 80
PLANS

THESE EROSION AND SEDIMENT CONTROL PLANS COMPLY WITH THE REGULATIONS SET FORTH BY THE NCG-010000 GENERAL CONSTRUCTION PERMIT EFFECTIVE AUGUST 3, 2011 ISSUED BY THE NORTH CAROLINA DEPARTMENT OF ENVIRONMENT AND NATURAL RESOURCES DIVISION OF WATER QUALITY.

Prepared in the Office of:

SUNGATE DESIGN GROUP, P.A.
915 JONES FRANKLIN ROAD
RALEIGH, NORTH CAROLINA 27606
TEL (919) 859-2243 FAX (919) 859-6258
ENG FIRM LICENSE NO. C-890

2012 STANDARD SPECIFICATIONS

Roadway Standard Drawings

The following roadway english standards as appear in "Roadway Standard Drawings"– Roadway Design Unit – N. C. Department of Transportation – Raleigh, N. C., dated January 2012 and the latest revison thereto are applicable to this project and by reference hereby are considered a part of these plans.

1604.01	Railroad Erosion Control Detail	1632.01	Rock Inlet Sediment Trap Type A
1605.01	Temporary Silt Fence	1632.02	Rock Inlet Sediment Trap Type B
1606.01	Special Sediment Control Fence	1632.03	Rock Inlet Sediment Trap Type C
1607.01	Gravel Construction Entrance	1633.01	Temporary Rock Silt Check Type A
1622.01	Temporary Berms and Slope Drains	1633.02	Temporary Rock Silt Check Type B
1630.01	Riser Basin	1634.01	Temporary Rock Sediment Dam Type A
1630.02	Silt Basin Type B	1634.02	Temporary Rock Sediment Dam Type B
1630.03	Temporary Silt Ditch	1635.01	Rock Pipe Inlet Sediment Trap Type A
1630.04	Stilling Basin	1635.02	Rock Pipe Inlet Sediment Trap Type B
1630.05	Temporary Diversion	1640.01	Coir Fiber Baffle
1630.06	Special Stilling Basin	1645.01	Temporary Stream Crossing
1631.01	Matting Installation		

12/4/2014
SF750232_EC_dsn_PSH_01.dgn
pedgerson

PROJECT REFERENCE NO.	SHEET NO.
17BP.8.R.77	EC-2
R/W SHEET NO.	
ROADWAY DESIGN ENGINEER	HYDRAULICS ENGINEER

WATTLE DETAIL

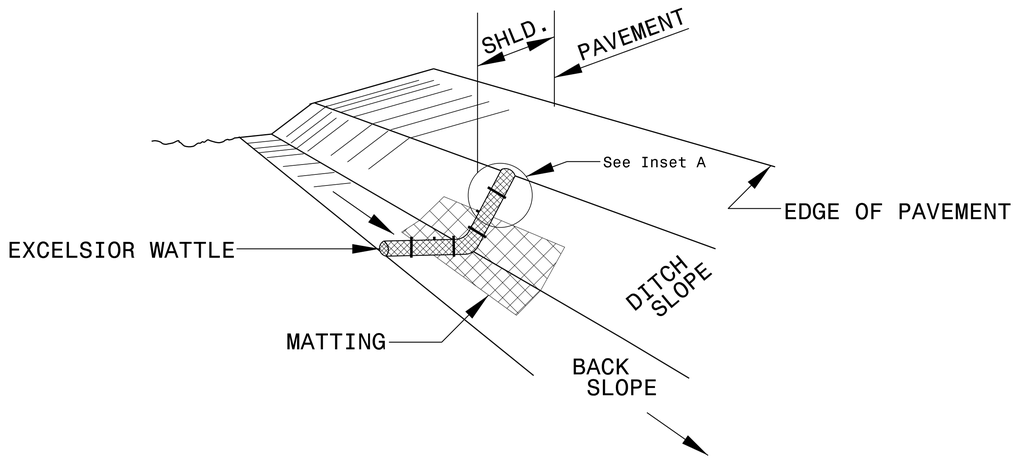

ISOMETRIC VIEW

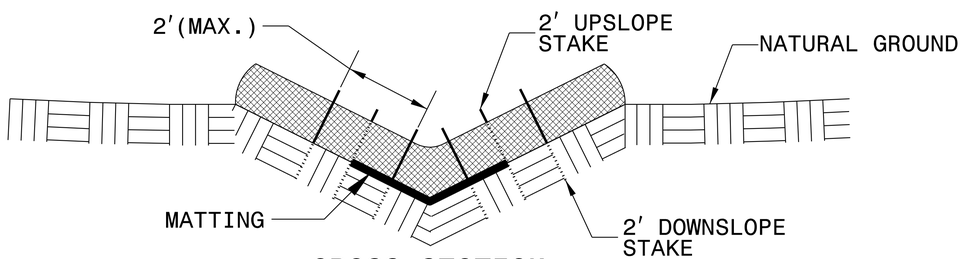

CROSS SECTION VEE DITCH

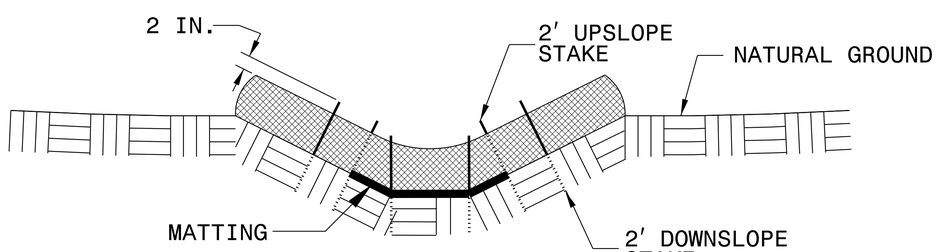

CROSS SECTION TRAPEZOIDAL DITCH

NOTES:

USE MINIMUM 12 IN. DIAMETER EXCELSIOR WATTLE.

USE 2 FT. WOODEN STAKES WITH A 2 IN. BY 2 IN. NOMINAL CROSS SECTION.

<u>ONLY</u> INSTALL WATTLE(S) TO A HEIGHT IN DITCH SO FLOW WILL NOT WASH AROUND WATTLE AND SCOUR DITCH SLOPES AND AS DIRECTED.

INSTALL A MINIMUM OF 2 UPSLOPE STAKES AND 4 DOWNSLOPE STAKES AT AN ANGLE TO WEDGE WATTLE TO BOTTOM OF DITCH.

PROVIDE STAPLES MADE OF 0.125 IN. DIAMETER STEEL WIRE FORMED INTO A U SHAPE NOT LESS THAN 12″ IN LENGTH.

INSTALL STAPLES APPROXIMATELY EVERY 1 LINEAR FOOT ON BOTH SIDES OF WATTLE AND AT EACH END TO SECURE IT TO THE SOIL.

INSTALL MATTING IN ACCORDANCE WITH SECTION 1631 OF THE STANDARD SPECIFICATIONS.

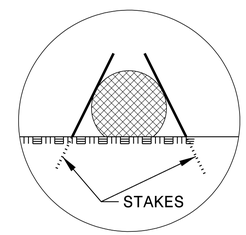

INSET A

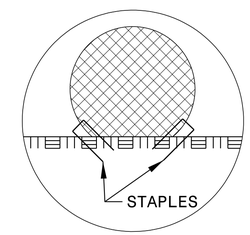

INSET B

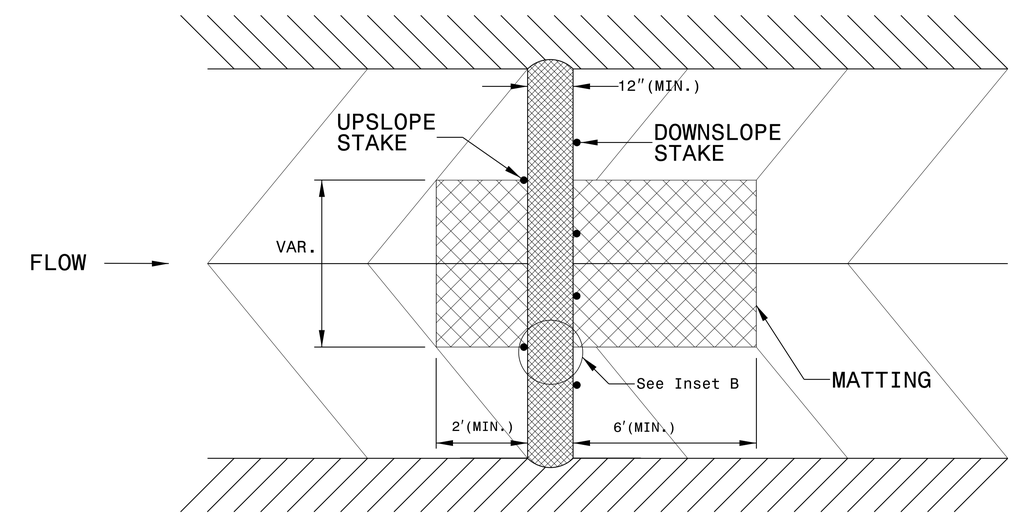

TOP VIEW

PROJECT REFERENCE NO.	SHEET NO.
17BP.8.R.77	EC-3
ROADWAY DESIGN ENGINEER	HYDRAULICS ENGINEER

DIVISION OF HIGHWAYS
STATE OF NORTH CAROLINA

SOIL STABILIZATION TIMEFRAMES

SITE DESCRIPTION	STABILIZATION TIME	TIMEFRAME EXCEPTIONS
PERIMETER DIKES, SWALES, DITCHES AND SLOPES	7 DAYS	NONE
HIGH QUALITY WATER (HQW) ZONES	7 DAYS	NONE
SLOPES STEEPER THAN 3:1	7 DAYS	IF SLOPES ARE 10' OR LESS IN LENGTH AND ARE NOT STEEPER THAN 2:1, 14 DAYS ARE ALLOWED.
SLOPES 3:1 OR FLATTER	14 DAYS	7 DAYS FOR SLOPES GREATER THAN 50' IN LENGTH.
ALL OTHER AREAS WITH SLOPES FLATTER THAN 4:1	14 DAYS	NONE, EXCEPT FOR PERIMETERS AND HQW ZONES.

EROSION CONTROL PLAN

NOTES: ANY DEVIATION FROM OPTIONS GIVEN WILL REQUIRE PRIOR APPROVAL BY ENGINEER.

ADDITIONAL EROSION CONTROL DEVICES MAY NEED TO BE INSTALLED AS DIRECTED BY THE ENGINEER.

NOTE:
PERIMETER EROSION CONTROL MEASURES SHALL BE INSTALLED DURING CLEARING AND GRUBBING PHASE.

NOTE:
PLACE TEMPORARY ROCK SEDIMENT DAMS TYPE – B AND TEMPORARY ROCK SILT CHECKS TYPE – A AT DRAINAGE OUTLETS.

CLEARING AND GRUBBING EROSION CONTROL FOR CONSTRUCTION SHEET 04

PROJECT REFERENCE NO.	SHEET NO.
17BP.8.R.77	EC-04/CONST.04
R/W SHEET NO.	
ROADWAY DESIGN ENGINEER	HYDRAULICS ENGINEER

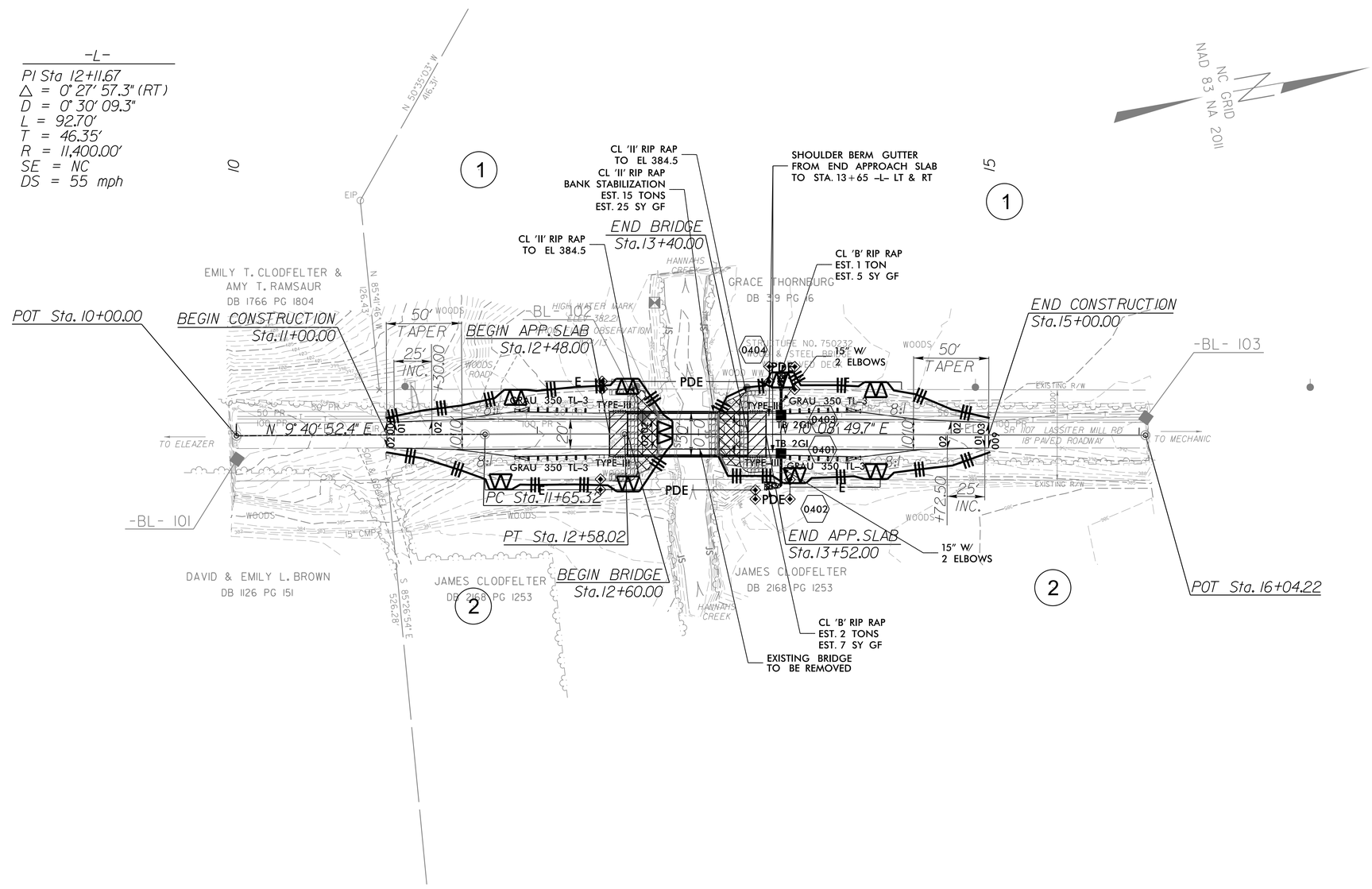

PROJECT REFERENCE NO.	SHEET NO.
17BP.8.R.77	EC-05/CONST.04
R/W SHEET NO.	
ROADWAY DESIGN ENGINEER	HYDRAULICS ENGINEER

EROSION CONTROL PLAN

NOTES: ANY DEVIATION FROM OPTIONS GIVEN WILL REQUIRE PRIOR APPROVAL BY ENGINEER.

ADDITIONAL EROSION CONTROL DEVICES MAY NEED TO BE INSTALLED AS DIRECTED BY THE ENGINEER.

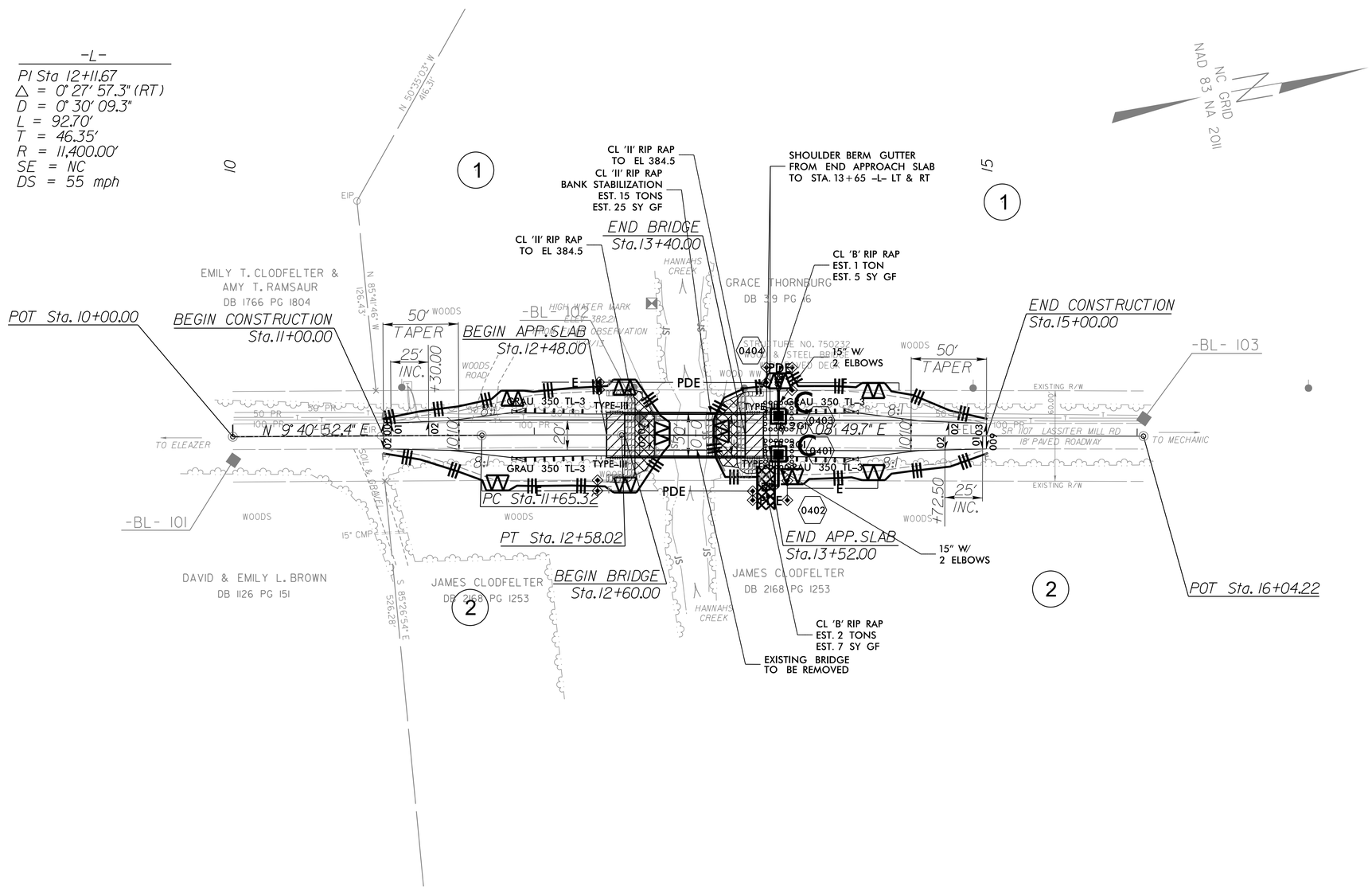

8/23/99

Prepared in the Office of: SUMMIT DESIGN AND ENGINEERING SERVICES
NC FIRM LICENSE No: P-0339
504 Meadowlands Drive
Hillsborough, NC 27278
(919) 732-3883
(919) 732-6676 (FAX)

0 2.5 5

PROJ. REFERENCE NO.	SHEET NO.
17BP.8.R.77	X-1

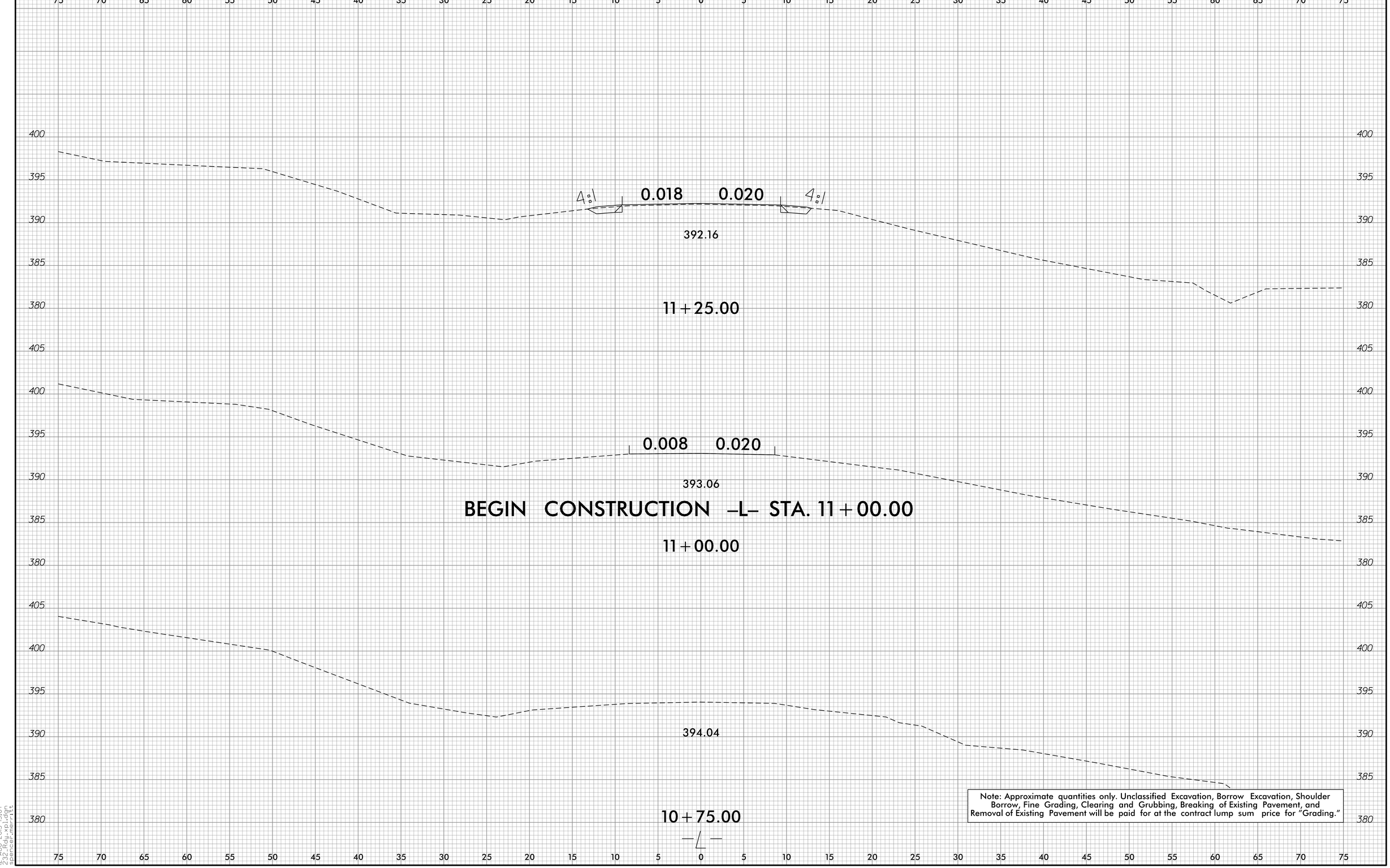

Note: Approximate quantities only. Unclassified Excavation, Borrow Excavation, Shoulder Borrow, Fine Grading, Clearing and Grubbing, Breaking of Existing Pavement, and Removal of Existing Pavement will be paid for at the contract lump sum price for "Grading."

12-AUG-2015 15:07
C:\SAD\17BP8R77.dgn
spencer.merritt

8/23/99

Prepared in the Office of: SUMMIT DESIGN AND ENGINEERING SERVICES
NC FIRM LICENSE No: P-0339
504 Meadowlands Drive
Hillsborough, NC 27278
(919) 732-3883
(919) 732-6676 (FAX)

0 2.5 5

PROJ. REFERENCE NO.	SHEET NO.
17BP.8.R.77	X-2

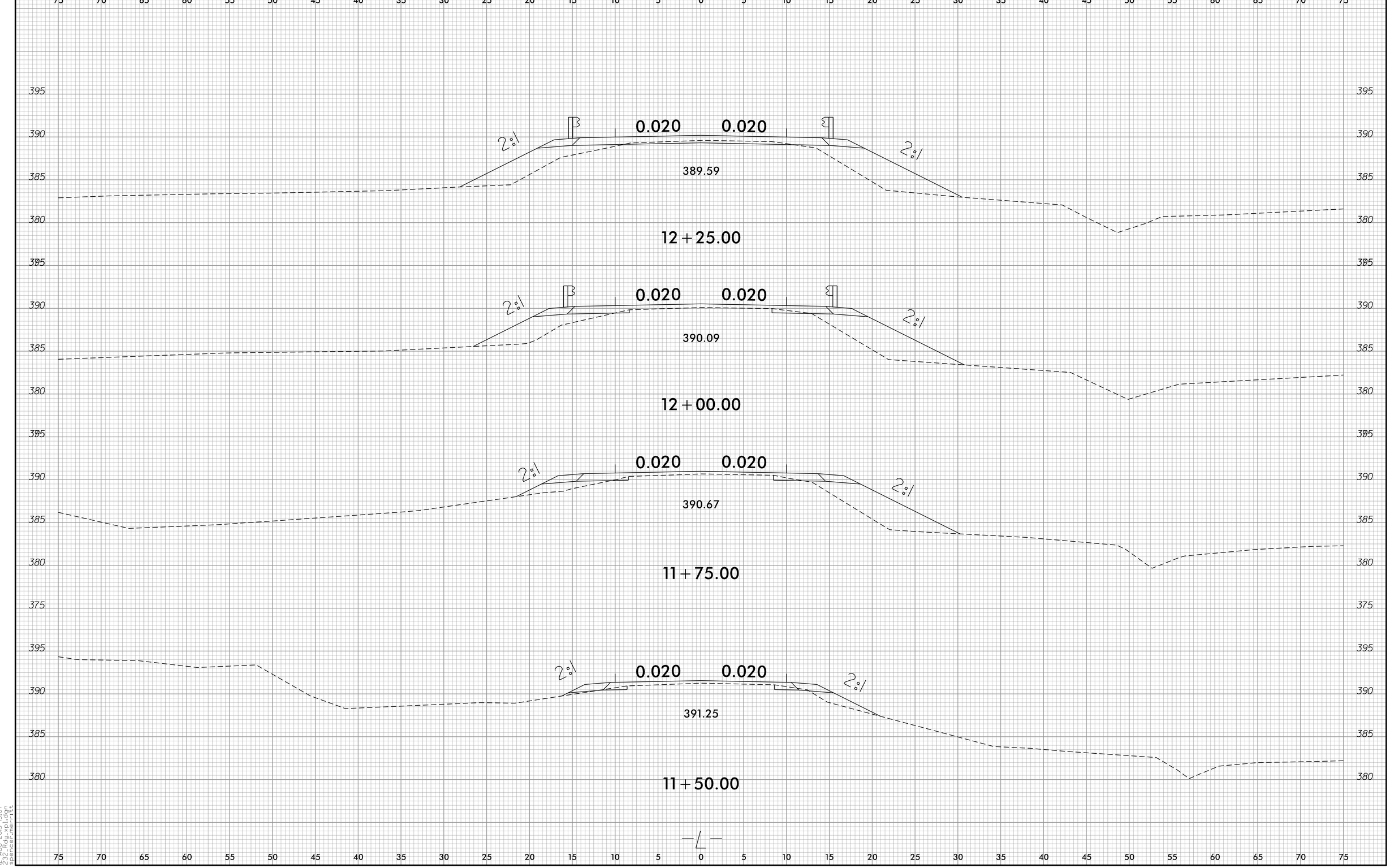

12-AUG-2015 15:07
C:\SUP\Proj\17bp8r77
spencer.merritt

Prepared in the Office of:
SUMMIT DESIGN AND ENGINEERING SERVICES
NC FIRM LICENSE No: P-0339
504 Meadowlands Drive
Hillsborough, NC 27278
(919) 732-3883
(919) 732-6676 (FAX)

0 2.5 5

PROJ. REFERENCE NO.	SHEET NO.
17BP.8.R.77	X-3

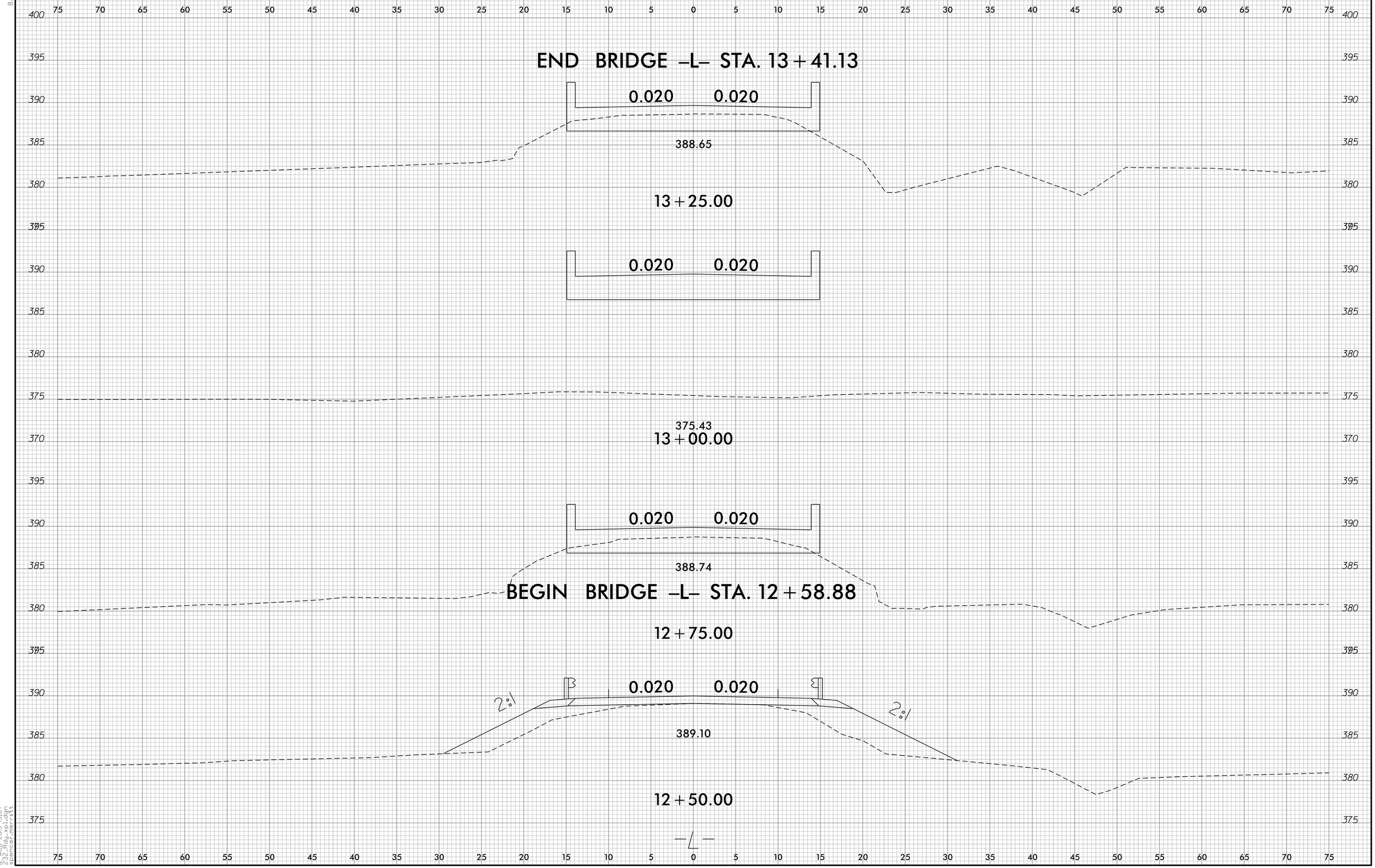

8/23/99

12-AUG-2015 15:07
s:\2015\17bp.8.r.77
spencer.merritt

Prepared in the Office of:
SUMMIT DESIGN AND ENGINEERING SERVICES
NC FIRM LICENSE No: P-0339
504 Meadowlands Drive
Hillsborough, NC 27278
(919) 732-3883
(919) 732-6676 (FAX)

0 2.5 5

PROJ. REFERENCE NO.	SHEET NO.
17BP.8.R.77	X-4

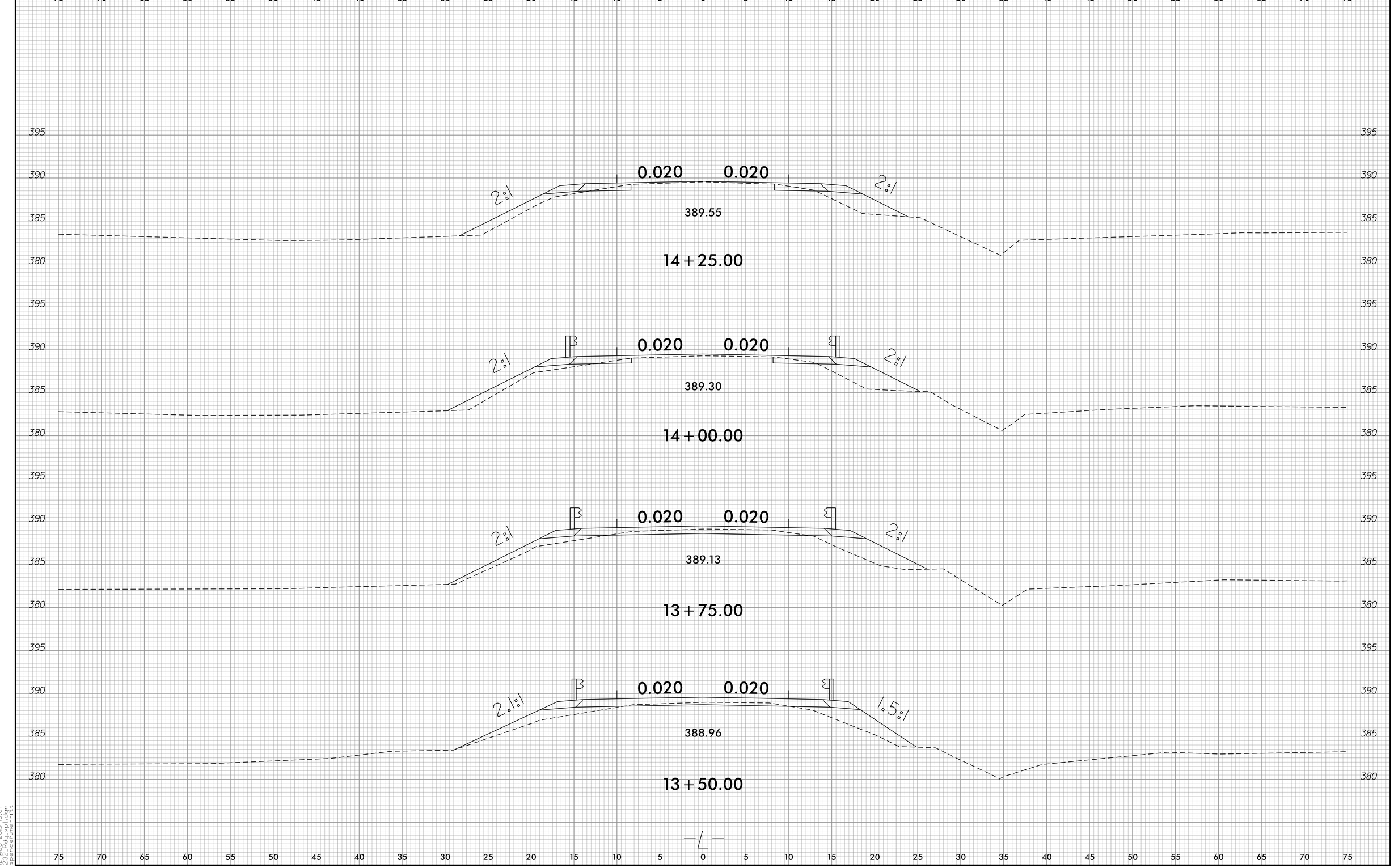

8/23/99

12-AUG-2015 15:07
s:\2015\2015-0100
spencer.merritt

8/23/99

Prepared in the Office of: SUMMIT DESIGN AND ENGINEERING SERVICES
NC FIRM LICENSE No: P-0339
504 Meadowlands Drive
Hillsborough, NC 27278
(919) 732-3883
(919) 732-6676 (FAX)

0 2.5 5

PROJ. REFERENCE NO.	SHEET NO.
17BP.8.R.77	X-5

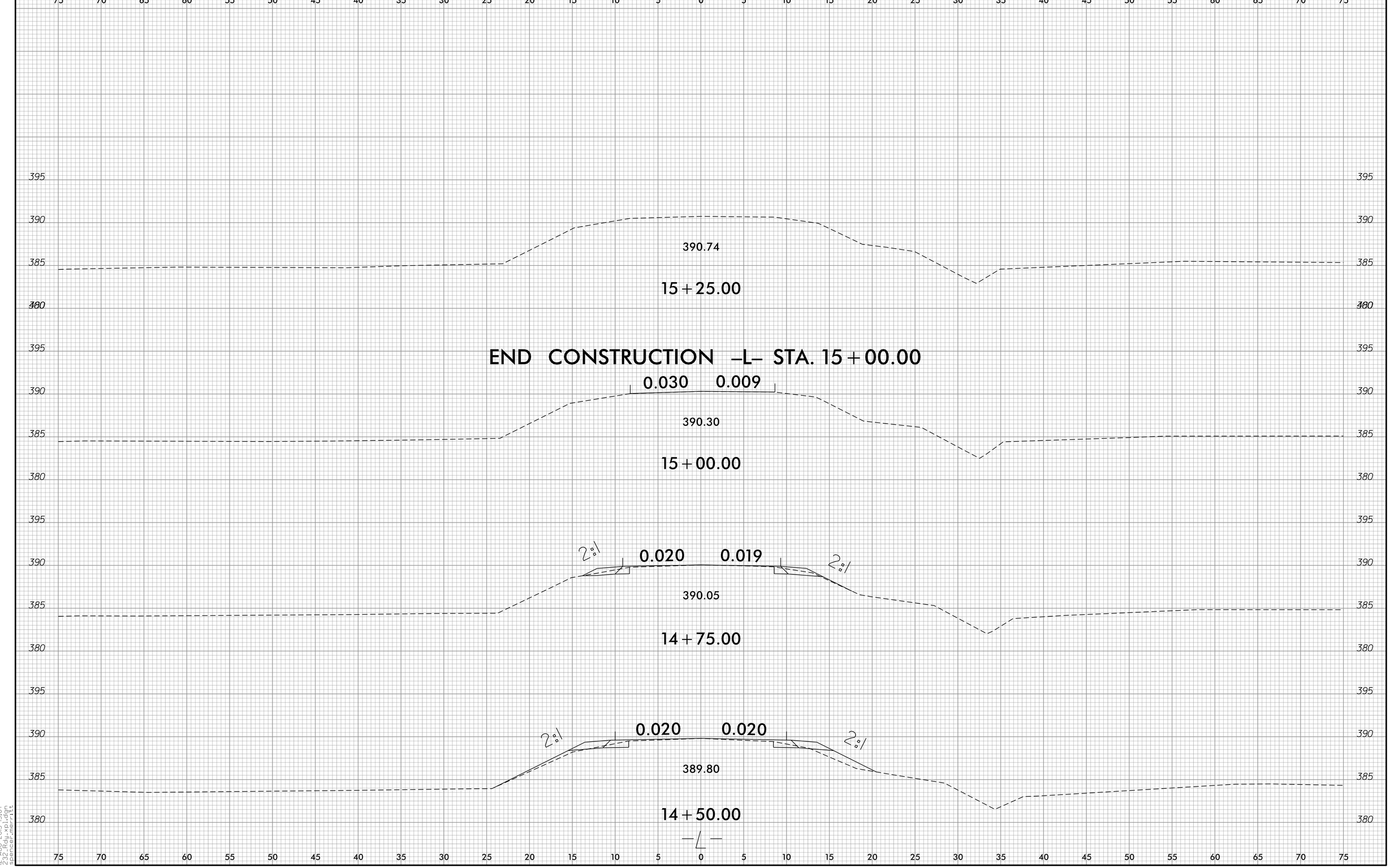

12-AUG-2015 15:07
z:\2015\15107
spencer.merritt

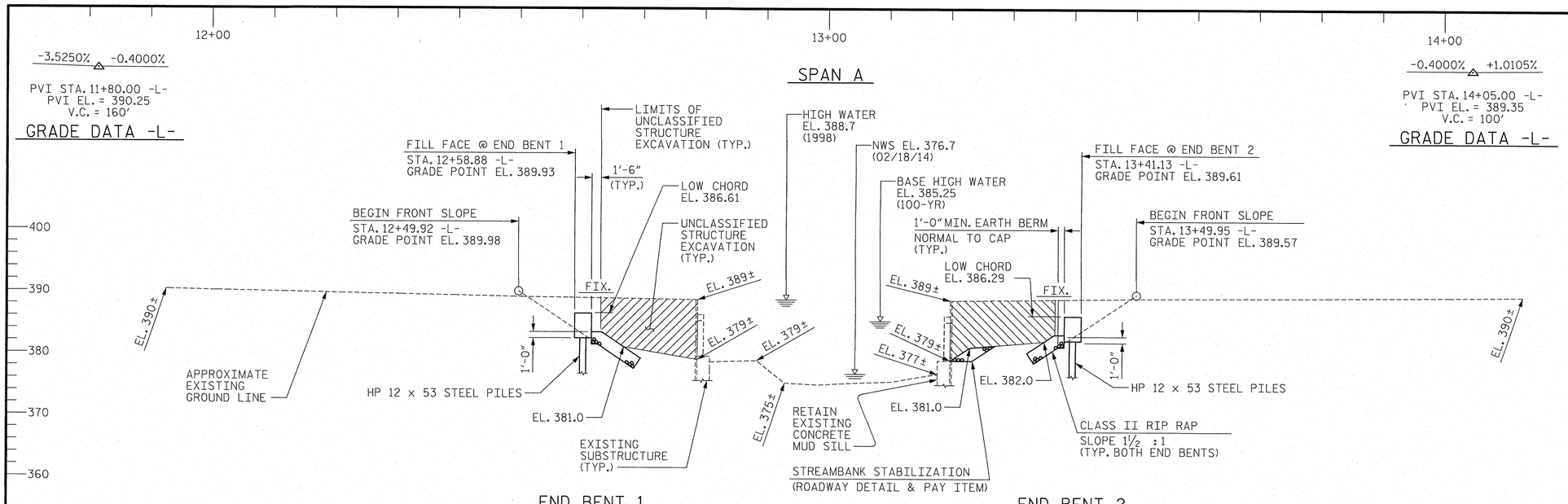

SECTION ALONG -L-

(SECTION TAKEN AT RIGHT ANGLES TO END BENTS)

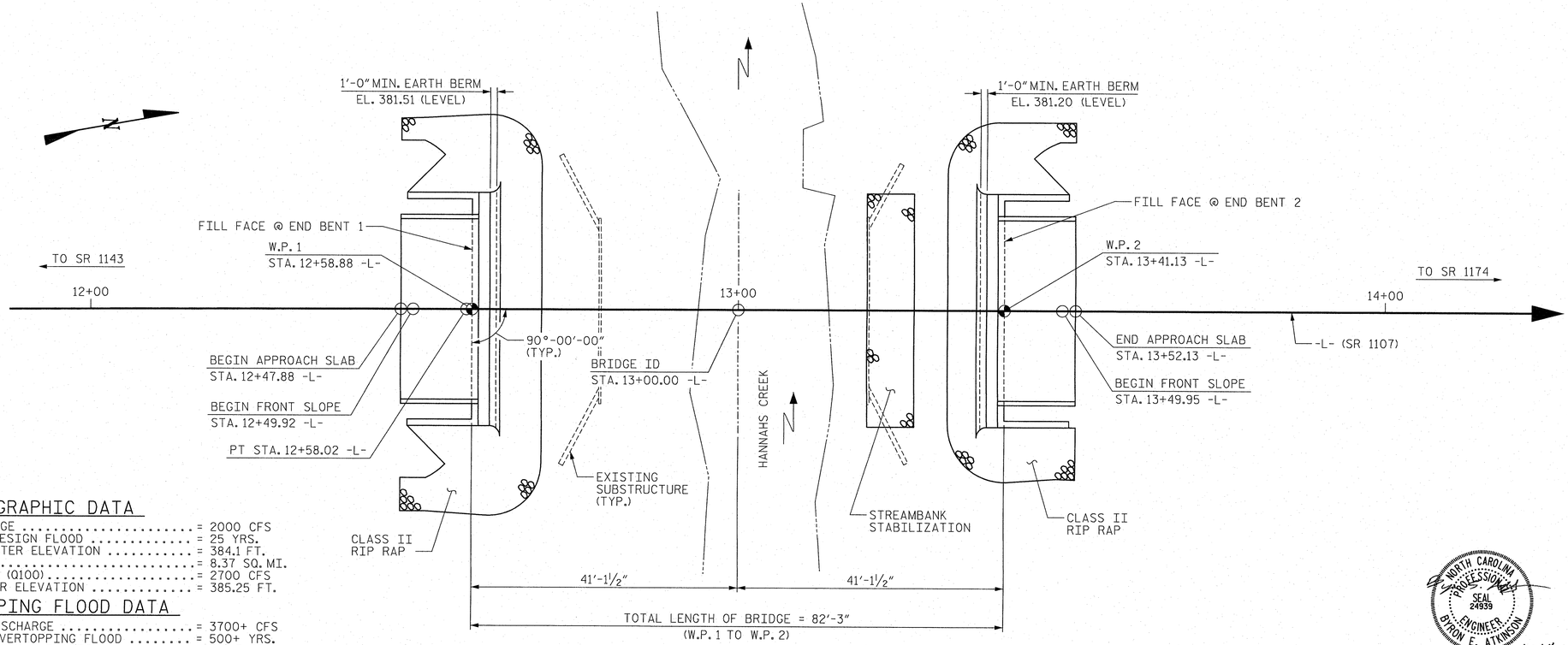

PLAN

(PILES NOT SHOWN FOR CLARITY)

HYDROGRAPHIC DATA

DESIGN DISCHARGE	= 2000 CFS
FREQUENCY OF DESIGN FLOOD	= 25 YRS.
DESIGN HIGH WATER ELEVATION	= 384.1 FT.
DRAINAGE AREA	= 8.37 SQ. MI.
BASE DISCHARGE (Q100)	= 2700 CFS
BASE HIGH WATER ELEVATION	= 385.25 FT.

OVERTOPPING FLOOD DATA

OVERTOPPING DISCHARGE	= 3700+ CFS
FREQUENCY OF OVERTOPPING FLOOD	= 500+ YRS.
OVERTOPPING FLOOD ELEVATION	= 389.5 FT.

I HEREBY CERTIFY THESE PLANS ARE THE AS-BUILT PLANS

PROJECT NO. 17BP.8.R.77
RANDOLPH COUNTY
STATION: 13+00.00 -L-

SHEET 1 OF 2 REPLACES BRIDGE NO. 232

STATE OF NORTH CAROLINA
DEPARTMENT OF TRANSPORTATION
RALEIGH

GENERAL DRAWING

FOR BRIDGE ON SR 1107
OVER HANNAHS CREEK
BETWEEN SR 1143 & SR 1174

NORTH CAROLINA PROFESSIONAL SEAL 24939 ENGINEER BYRON E. ATKINSON
12/02/14

DRAWN BY : J.S. ISRAELNAIM DATE : 10/14
CHECKED BY : B.E. ATKINSON DATE : 11/14
DESIGN ENGINEER OF RECORD : B.E. ATKINSON DATE : 11/14

MI ENGINEERING
1011 SCHAUB DRIVE, SUITE 100
RALEIGH, NC 27606
(919) 851-6606
FIRM PE NUMBER : P-0671

REVISIONS						SHEET NO.
NO.	BY:	DATE:	NO.	BY:	DATE:	S-1
1			3			TOTAL SHEETS
2			4			15

12/2/2014
12:18:36 PM
User: blanning
Filename: P:\NC Bridges\MI3012 - Div 08 Bridge Replacements_Summit\MI3012.03_Randolph 232\17BP8R77\Structures\17BP8R77_SD_GD1.dgn

B.M. #1: R/R SPIKE IN BASE OF 15" ASH TREE; 87.34' LT. OF STA. 12+77.75 -L-, EL. 379.87

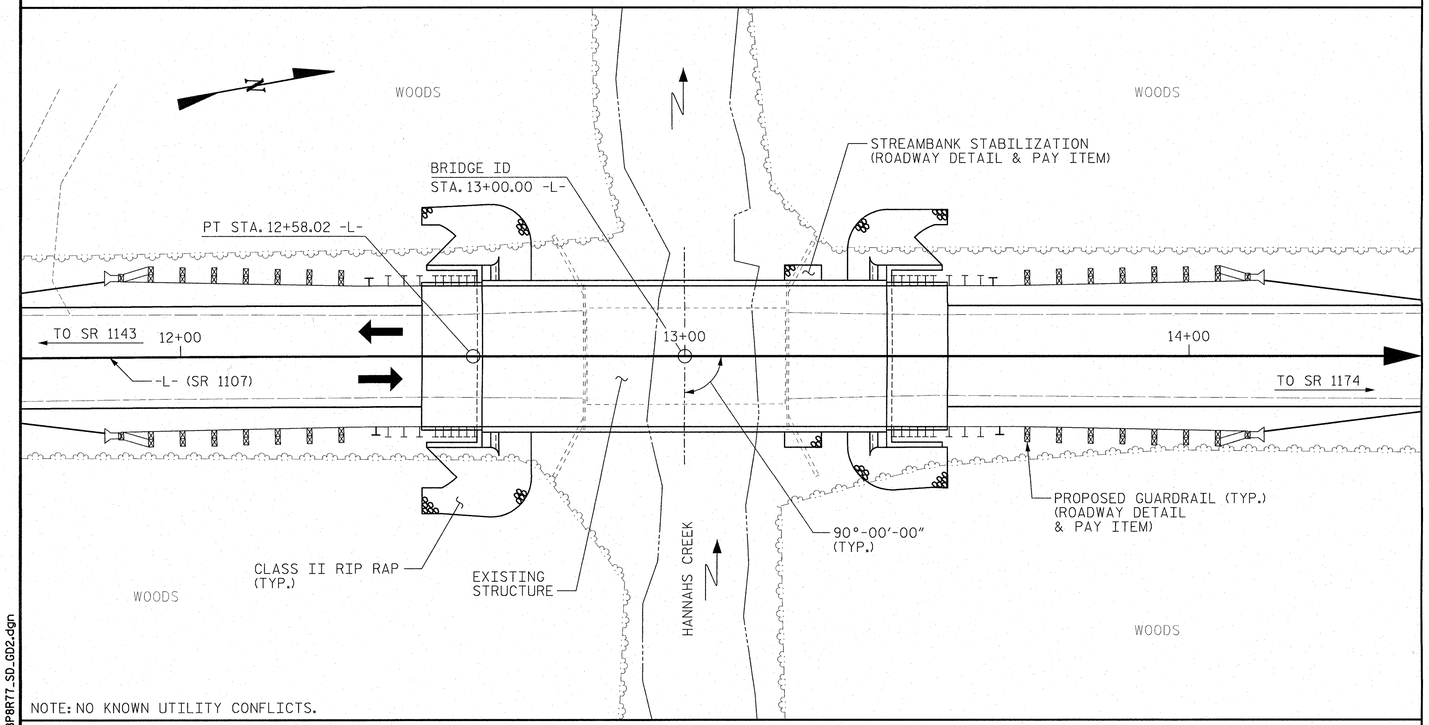

NOTE: NO KNOWN UTILITY CONFLICTS.

LOCATION SKETCH

NOTES

ASSUMED LIVE LOAD = HL-93 OR ALTERNATE LOADING.

FOR OTHER DESIGN DATA AND GENERAL NOTES, SEE SHEET SN.

FOR EROSION CONTROL MEASURES SEE EROSION CONTROL PLANS.

THIS BRIDGE HAS BEEN DESIGNED IN ACCORDANCE WITH THE REQUIREMENTS OF THE AASHTO LRFD BRIDGE DESIGN SPECIFICATIONS.

THIS BRIDGE IS LOCATED IN SEISMIC ZONE 1.

THE EXISTING STRUCTURE CONSISTING OF ONE SPAN @ 40'-6", WITH A TIMBER DECK ON I-BEAMS WITH A CLEAR ROADWAY WIDTH OF 19'-2" ON TIMBER CAP WITH TIMBER PILES END BENTS AND LOCATED AT THE SITE OF THE PROPOSED STRUCTURE SHALL BE REMOVED.

REMOVAL OF THE EXISTING BRIDGE SHALL BE PERFORMED SO AS TO NOT ALLOW DEBRIS TO FALL INTO THE WATER. THE CONTRACTOR SHALL SUBMIT DEMOLITION PLANS FOR REVIEW AND REMOVE THE BRIDGE IN ACCORDANCE WITH ARTICLE 402-2 OF THE STANDARD SPECIFICATIONS.

THE MATERIAL SHOWN IN THE CROSS-HATCHED AREA SHALL BE EXCAVATED FOR A DISTANCE OF 30 FT. EACH SIDE OF THE CENTERLINE ROADWAY AS DIRECTED BY THE ENGINEER. THIS WORK WILL BE PAID FOR AT THE CONTRACT LUMP SUM PRICE FOR UNCLASSIFIED STRUCTURE EXCAVATION. SEE SECTION 412 OF THE STANDARD SPECIFICATIONS.

THE SUBSTRUCTURE OF THE EXISTING BRIDGE INDICATED ON THE PLANS IS FROM THE BEST INFORMATION AVAILABLE. THIS INFORMATION IS SHOWN FOR THE CONVENIENCE OF THE CONTRACTOR. THE CONTRACTOR SHALL HAVE NO CLAIM WHATSOEVER AGAINST THE DEPARTMENT OF TRANSPORTATION FOR ANY DELAYS OR ADDITIONAL COST INCURRED BASED ON THE DIFFERENCES BETWEEN THE EXISTING BRIDGE SUBSTRUCTURE SHOWN ON THE PLANS AND THE ACTUAL CONDITIONS AT THE PROJECT SITE.

INASMUCH AS THE PAINT SYSTEM ON THE EXISTING STRUCTURAL STEEL CONTAINS LEAD, THE CONTRACTOR'S ATTENTION IS DIRECTED TO ARTICLE 107-1 OF THE STANDARD SPECIFICATIONS. ANY COSTS RESULTING FROM COMPLIANCE WITH APPLICABLE STATE OR FEDERAL REGULATIONS PERTAINING TO HANDLING OF MATERIALS CONTAINING LEAD BASED PAINT SHALL BE INCLUDED IN THE BID PRICE FOR "REMOVAL OF EXISTING STRUCTURE AT STATION 13+00.00 -L-.

ASPHALT WEARING SURFACE IS INCLUDED IN THE ROADWAY QUANTITY. SEE ROADWAY QUANTITIES.

THIS STRUCTURE HAS BEEN DESIGNED IN ACCORDANCE WITH "HEC 18 - EVALUATING SCOUR AT BRIDGES".

FOR FORMWORK AND FALSEWORK, SEE SPECIAL PROVISIONS.

FOR SUBMITTAL OF WORKING DRAWINGS, SEE SPECIAL PROVISIONS.

FOR CRANE SAFETY, SEE SPECIAL PROVISIONS.

FOR GROUT FOR STRUCTURES, SEE SPECIAL PROVISIONS.

FOR PILES, SEE SECTION 450 OF THE STANDARD SPECIFICATIONS.

PILES AT END BENT 1 AND END BENT 2 ARE DESIGNED FOR A FACTORED RESISTANCE OF 120 TONS PER PILE.

DRIVE PILES AT END BENT 1 AND END BENT 2 TO A REQUIRED DRIVING RESISTANCE OF 200 TONS PER PILE.

PILE EXCAVATION IS REQUIRED TO INSTALL PILES AT END BENT 1 AND END BENT 2. EXCAVATE HOLES AT PILE LOCATIONS TO EL. 371.6 AT END BENT 1 AND EL. 373.3 AT END BENT 2 (LT.) AND EL. 371.6 AT END BENT 2 (RT.). FOR PILE EXCAVATION, SEE SECTION 450 OF THE STANDARD SPECIFICATIONS.

CONCRETE OR GROUT IS REQUIRED TO FILL HOLES FOR PILE EXCAVATION AT END BENT 1 AND END BENT 2.

ALL PILES ARE TO INSTALLED PLUMB WITH THE STRONG AXIS ORIENTED PARALLEL TO THE BRIDGE DECK ALIGNMENT.

TOTAL BILL OF MATERIAL

	REMOVAL OF EXISTING STRUCTURE	PILE EXCAVATION IN SOIL	PILE EXCAVATION NOT IN SOIL	UNCLASSIFIED STRUCTURE EXCAVATION	CLASS A CONCRETE	BRIDGE APPROACH SLABS	REINFORCING STEEL	HP 12 X 53 STEEL PILES		VERTICAL CONCRETE BARRIER RAIL	RIP RAP CLASS II (2'-0" THICK)	GEOTEXTILE FOR DRAINAGE	ELASTOMERIC BEARINGS	3'-0" x 2'-9" PRESTRESSED CONCRETE BOX BEAMS	
	LUMP SUM	LIN. FT.	LIN. FT.	LUMP SUM	CU. YDS.	LUMP SUM	LBS.	NO.	LIN. FT.	LIN. FT.	TON	SQ. YDS	LUMP SUM	NO.	LIN. FT.
SUPERSTRUCTURE						LUMP SUM				160.0			LUMP SUM	10	800.00
END BENT 1		50.0	25.0	LUMP SUM	23.8		3342	5	75.0		112	124			
END BENT 2		40.0	25.0	LUMP SUM	23.8		3342	5	65.0		85	95			
TOTAL	LUMP SUM	90.0	50.0	LUMP SUM	47.6	LUMP SUM	6684	10	140.0	160.0	197	219	LUMP SUM	10	800.00

PROJECT NO. 17BP.8.R.77

RANDOLPH COUNTY

STATION: 13+00.00 -L-

SHEET 2 OF 2

STATE OF NORTH CAROLINA
DEPARTMENT OF TRANSPORTATION
RALEIGH

GENERAL DRAWING

FOR BRIDGE ON SR 1107
OVER HANNAHS CREEK
BETWEEN SR 1143 & SR 1174

NORTH CAROLINA PROFESSIONAL SEAL 24939 ENGINEER BYRON E. ATKINSON
12/02/14

MI ENGINEERING
1011 SCHAUB DRIVE, SUITE 100
RALEIGH, NC 27606
(919) 851-6606
FIRM PE NUMBER : P-0671

REVISIONS							SHEET NO.
NO.	BY:	DATE:	NO.	BY:	DATE:		S-2
1			3				TOTAL SHEETS
2			4				15

DRAWN BY : B.E. LANNING DATE : 10/14
CHECKED BY : B.E. ATKINSON DATE : 11/14
DESIGN ENGINEER OF RECORD : B.E. ATKINSON DATE : 11/14

12/2/2014
12:20:10 PM
User: blanning
Filename: P:\NC Bridges\MI3012 - Div 08 Bridge Replacements_Summit\MI3012.03_Randolph 232\17BP8R77\Structures\17BP8R77_SD_GD2.dgn

LOAD AND RESISTANCE FACTOR RATING (LRFD) SUMMARY FOR PRESTRESSED CONCRETE GIRDERS

LEVEL		VEHICLE	WEIGHT (W) (TONS)	CONTROLLING LOAD RATING	MINIMUM RATING FACTORS (RF)	TONS = W X RF	STRENGTH I LIMIT STATE											SERVICE III LIMIT STATE						COMMENT NUMBER
								MOMENT					SHEAR						MOMENT					
							LIVELOAD FACTORS	DISTRIBUTION FACTORS (DF)	RATING FACTOR	SPAN	GIRDER LOCATION	DISTANCE FROM LEFT END OF SPAN (ft)	DISTRIBUTION FACTORS (DF)	RATING FACTOR	SPAN	GIRDER LOCATION	DISTANCE FROM LEFT END OF SPAN (ft)	LIVELOAD FACTORS	DISTRIBUTION FACTORS (DF)	RATING FACTOR	SPAN	GIRDER LOCATION	DISTANCE FROM LEFT END OF SPAN (ft)	
DESIGN LOAD RATING		HL-93(Inv)	N/A	1	1.155	--	1.75	0.273	1.72	A	EL	39.25	0.502	1.51	A	EL	7.85	0.80	0.273	**1.15**	A	EL	**39.25**	
		HL-93(Opr)	N/A	--	1.958	--	1.35	0.273	2.23	A	EL	39.25	0.502	1.96	A	EL	7.85	N/A	--	--	--	--	--	
		HS-20(Inv)	36.000	2	1.533	55.181	1.75	0.273	2.28	A	EL	39.25	0.502	1.91	A	EL	7.85	0.80	0.273	**1.53**	A	EL	**39.25**	
		HS-20(Opr)	36.000	--	2.473	89.021	1.35	0.273	2.96	A	EL	39.25	0.502	2.47	A	EL	7.85	N/A	--	--	--	--	--	
LEGAL LOAD RATING	SV	SNSH	13.500	--	3.509	47.376	1.4	0.273	6.53	A	EL	39.25	0.502	5.73	A	EL	7.85	0.80	0.273	3.51	A	EL	39.25	
		SNGARBS2	20.000	--	2.594	51.88	1.4	0.273	4.82	A	EL	39.25	0.502	4.06	A	EL	7.85	0.80	0.273	2.59	A	EL	39.25	
		SNAGRIS2	22.000	--	2.448	53.85	1.4	0.273	4.55	A	EL	39.25	0.502	3.76	A	EL	7.85	0.80	0.273	2.45	A	EL	39.25	
		SNCOTTS3	27.250	--	1.746	47.571	1.4	0.273	3.25	A	EL	39.25	0.502	2.86	A	EL	7.85	0.80	0.273	1.75	A	EL	39.25	
		SNAGGRS4	34.925	--	1.451	50.667	1.4	0.273	2.7	A	EL	39.25	0.502	2.36	A	EL	7.85	0.80	0.273	1.45	A	EL	39.25	
		SNS5A	35.550	--	1.419	50.453	1.4	0.273	2.64	A	EL	39.25	0.502	2.38	A	EL	7.85	0.80	0.273	1.42	A	EL	39.25	
		SNS6A	39.950	--	1.299	51.885	1.4	0.273	2.42	A	EL	39.25	0.502	2.17	A	EL	7.85	0.80	0.273	1.30	A	EL	39.25	
		SNS7B	42.000	--	1.237	51.941	1.4	0.273	2.3	A	EL	39.25	0.502	2.13	A	EL	7.85	0.80	0.273	1.24	A	EL	39.25	
	TTST	TNAGRIT3	33.000	--	1.583	52.231	1.4	0.273	2.94	A	EL	39.25	0.502	2.59	A	EL	7.85	0.80	0.273	1.58	A	EL	39.25	
		TNT4A	33.075	--	1.589	52.55	1.4	0.273	2.96	A	EL	39.25	0.502	2.53	A	EL	7.85	0.80	0.273	1.59	A	EL	39.25	
		TNT6A	41.600	--	1.296	53.907	1.4	0.273	2.41	A	EL	39.25	0.502	2.25	A	EL	7.85	0.80	0.273	1.30	A	EL	39.25	
		TNT7A	42.000	--	1.301	54.625	1.4	0.273	2.42	A	EL	39.25	0.502	2.21	A	EL	7.85	0.80	0.273	1.30	A	EL	39.25	
		TNT7B	42.000	--	1.341	56.333	1.4	0.273	2.49	A	EL	39.25	0.502	2.08	A	EL	7.85	0.80	0.273	1.34	A	EL	39.25	
		TNAGRIT4	43.000	--	1.279	55.001	1.4	0.273	2.38	A	EL	39.25	0.502	2.02	A	EL	7.85	0.80	0.273	1.28	A	EL	39.25	
		TNAGT5A	45.000	--	1.207	54.337	1.4	0.273	2.25	A	EL	39.25	0.502	2	A	EL	7.85	0.80	0.273	1.21	A	EL	39.25	
		TNAGT5B	45.000	3	1.194	53.739	1.4	0.273	2.22	A	EL	39.25	0.502	1.92	A	EL	7.85	0.80	0.273	**1.19**	A	EL	**39.25**	

LOAD FACTORS:

DESIGN LOAD RATING FACTORS	LIMIT STATE	γ_{DC}	γ_{DW}
	STRENGTH I	1.25	1.50
	SERVICE III	1.00	1.00

NOTES:

MINIMUM RATING FACTORS ARE BASED ON THE STRENGTH I AND SERVICE III LIMIT STATES.

ALLOWABLE STRESSES FOR SERVICE III LIMIT STATE ARE AS REQUIRED FOR DESIGN.

COMMENTS:

1.
2.
3.
4.

(#) CONTROLLING LOAD RATING
(1) DESIGN LOAD RATING (HL-93)
(2) DESIGN LOAD RATING (HS-20)
(3) LEGAL LOAD RATING **
** SEE CHART FOR VEHICLE TYPE

GIRDER LOCATION
I - INTERIOR GIRDER
EL - EXTERIOR LEFT GIRDER
ER - EXTERIOR RIGHT GIRDER

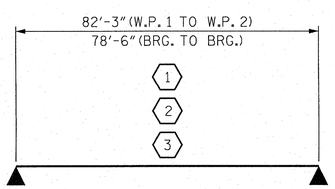

LRFR SUMMARY

PROJECT NO. 17BP.8.R.77
RANDOLPH COUNTY
STATION: 13+00.00 -L-

STATE OF NORTH CAROLINA
DEPARTMENT OF TRANSPORTATION
RALEIGH

STANDARD
LRFR SUMMARY FOR 80' BOX BEAM UNIT 90° SKEW
(NON-INTERSTATE TRAFFIC)

NORTH CAROLINA PROFESSIONAL SEAL 24939 ENGINEER BRIAN E. ATKINSON
11/12/14

MI ENGINEERING
1011 SCHAUB DRIVE, SUITE 100
RALEIGH, NC 27606
(919) 851-6606
FIRM PE NUMBER : P-0671

REVISIONS								
NO.	BY:	DATE:	NO.	BY:	DATE:			
1			3					
2			4					

SHEET NO. S-3
TOTAL SHEETS 15

ASSEMBLED BY: B.E. LANNING DATE: 10/14
CHECKED BY : B.E. ATKINSON DATE: 10/14
DESIGN ENGINEER OF RECORD: B.E. ATKINSON DATE: 10/14
DRAWN BY : TMG II/II
CHECKED BY : AAC II/II

12/2/2014
12:09:43 PM
User: blanning
Filename: P:\NC Bridges\MI3012 - Div 08 Bridge Replacements_Summit\MI3012.03_Randolph 232\17BP8R77\Structures\17BP8R77_SD_LRFR1.dgn

STD. NO. 33LRFR1_90S_80L

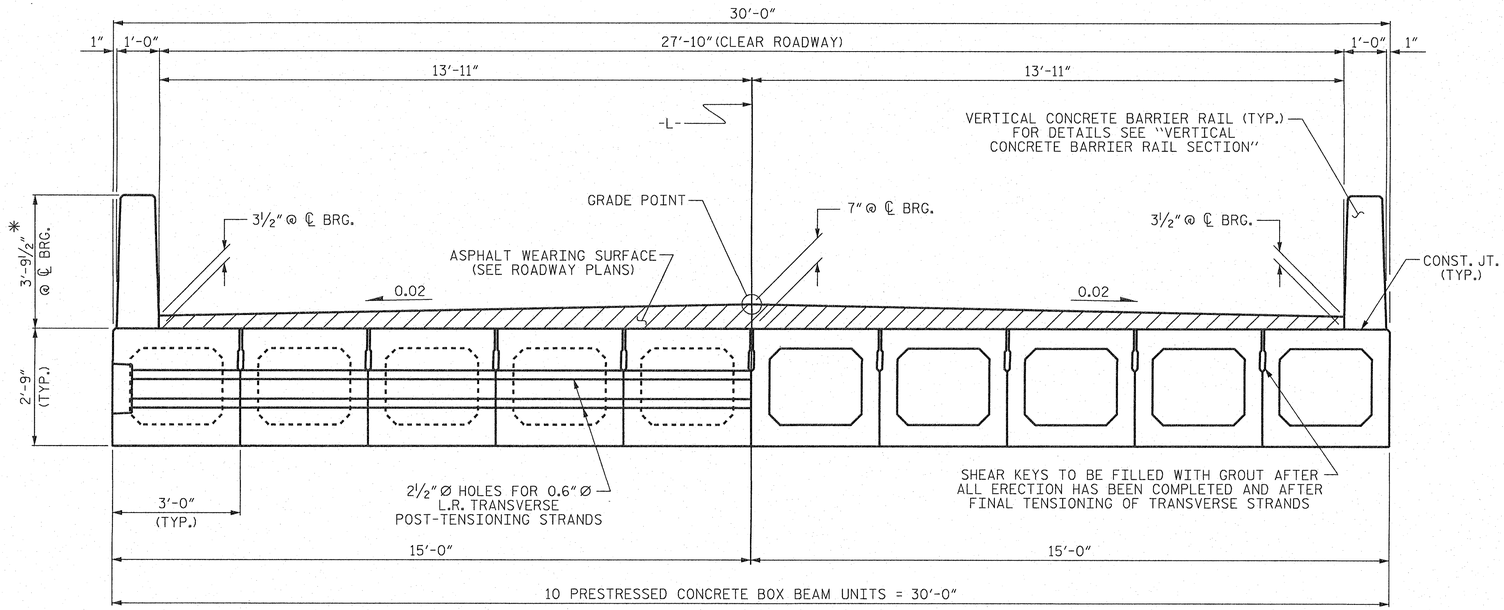

HALF SECTION
AT INTERMEDIATE DIAPHRAGMS

HALF SECTION
THROUGH VOIDS

TYPICAL SECTION

*THE MAXIMUM BARRIER RAIL HEIGHT AND ASPHALT THICKNESS IS SHOWN. THE HEIGHT OF THE BARRIER RAIL AND ASPHALT THICKNESS VARIES WHILE THE TOP OF THE BARRIER RAIL FOLLOWS THE PROFILE OF THE GUTTERLINE. FOR RAIL HEIGHT DETAILS AND ASPHALT THICKNESS, SEE THE "VERTICAL CONCRETE BARRIER RAIL SECTION" DETAIL.

FIXED END

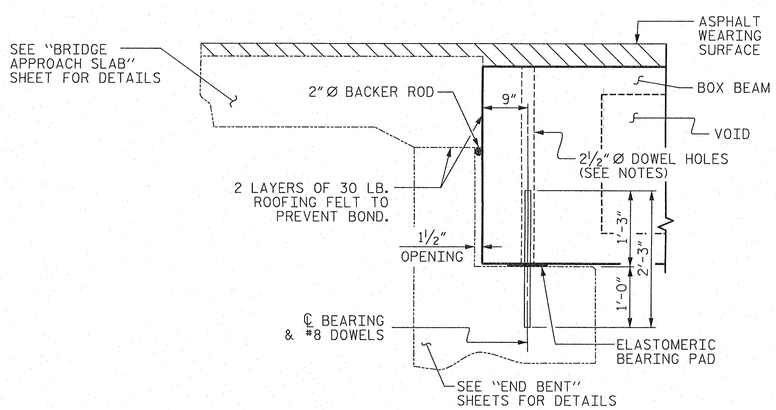

SECTION AT END BENT

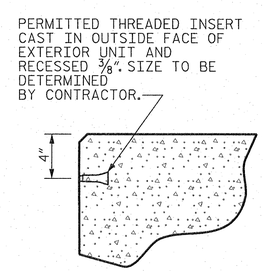

THREADED INSERT DETAIL

NOTES

ALL PRESTRESSING STRANDS SHALL BE 7-WIRE LOW RELAXATION GRADE 270 STRANDS AND SHALL CONFORM TO AASHTO M203 EXCEPT FOR SAMPLING REQUIREMENTS WHICH SHALL BE IN ACCORDANCE WITH THE STANDARD SPECIFICATIONS.

ALL REINFORCING STEEL CAST WITH THE BOX BEAM SECTIONS SHALL BE GRADE 60 AND SHALL BE INCLUDED IN THE UNIT PRICE BID FOR PRESTRESSED CONCRETE BOX BEAMS.

FLAME CUTTING OF THE TRANSVERSE POST-TENSIONING STRAND IS NOT ALLOWED.

RECESSES FOR TRANSVERSE STRANDS SHALL BE GROUTED AFTER THE TENSIONING OF THE STRANDS.

THE 2½" Ø DOWEL HOLES AT FIXED ENDS OF BOX BEAM SECTIONS SHALL BE FILLED WITH NON-SHRINK GROUT.

THE BACKER RODS SHALL CONFORM TO THE REQUIREMENTS OF TYPE M BOND BREAKER. SEE SECTION 1028 OF THE STANDARD SPECIFICATIONS.

THE TRANSFER OF LOAD FROM THE ANCHORAGES TO THE BOX BEAM UNIT SHALL BE DONE WHEN THE CONCRETE HAS REACHED A COMPRESSIVE STRENGTH OF NOT LESS THAN 6000 PSI.

ALL REINFORCING STEEL IN VERTICAL CONCRETE BARRIER RAILS SHALL BE EPOXY COATED.

PRESTRESSING STRANDS SHALL BE CUT FLUSH WITH THE BOX BEAM UNIT ENDS.

APPLY EPOXY PROTECTIVE COATING TO BOX BEAM UNIT ENDS.

VERTICAL GROOVED CONTRACTION JOINTS, ½" IN DEPTH, SHALL BE TOOLED IN ALL EXPOSED FACES OF THE BARRIER RAIL AND IN ACCORDANCE WITH ARTICLE 825-10(B) OF THE STANDARD SPECIFICATIONS. A VERTICAL CONTRACTION JOINT SHALL BE LOCATED AT EACH THIRD POINT BETWEEN BARRIER RAIL EXPANSION JOINTS. ONLY ONE CONTRACTION JOINT IS REQUIRED AT MIDPOINT OF BARRIER RAIL SEGMENTS LESS THAN 20 FEET IN LENGTH AND NO CONTRACTION JOINTS ARE REQUIRED FOR THOSE SEGMENTS LESS THAN 10 FEET IN LENGTH.

THE LOCATION OF THE VOID DRAINS MAY BE SHIFTED SLIGHTLY WHERE NECESSARY TO CLEAR PRESTRESSING STRANDS OR TRANSVERSE REINFORCING STEEL.

FOR GROUT FOR STRUCTURES, SEE SPECIAL PROVISIONS.

THE PERMITTED THREADED INSERTS ARE DETAILED AS AN OPTION FOR THE CONTRACTOR TO ATTACH FALSEWORK AND FORMWORK DURING CONSTRUCTION.

THE PERMITTED THREADED INSERTS IN THE EXTERIOR UNITS SHALL BE SIZED BY THE CONTRACTOR, SPACED AT 4'-0" CENTERS AND GALVANIZED IN ACCORDANCE WITH SECTION 1076 OF THE STANDARD SPECIFICATIONS. STAINLESS STEEL THREADED INSERTS MAY BE USED AS AN ALTERNATE.

THE PERMITTED THREADED INSERTS SHALL BE GROUTED BY THE CONTRACTOR IMMEDIATELY FOLLOWING REMOVAL OF THE FALSEWORK.

THE COST OF THE PERMITTED THREADED INSERTS SHALL BE INCLUDED IN THE PRICE BID FOR THE PRECAST UNITS.

PROJECT NO. 17BP.8.R.77
RANDOLPH COUNTY
STATION: 13+00.00 -L-

SHEET 1 OF 5

STATE OF NORTH CAROLINA
DEPARTMENT OF TRANSPORTATION
RALEIGH

STANDARD

3'-0" X 2'-9"
PRESTRESSED CONCRETE
BOX BEAM UNIT

NORTH CAROLINA PROFESSIONAL SEAL 24939 ENGINEER BYRON E. ATKINSON
12/02/14

ASSEMBLED BY:	B.E. LANNING	DATE: 10/14	
CHECKED BY :	B.E. ATKINSON	DATE: 10/14	
DESIGN ENGINEER OF RECORD:	B.E. ATKINSON	DATE: 10/14	
DRAWN BY : DGE 8/11	REV. 8/14	MAA/TMG	
CHECKED BY : TMG 11/11			

MI ENGINEERING
1011 SCHAUB DRIVE, SUITE 100
RALEIGH, NC 27606
(919) 851-6606
FIRM PE NUMBER : P-0671

REVISIONS						
NO.	BY:	DATE:	NO.	BY:	DATE:	
1			3			
2			4			

SHEET NO. S-4
TOTAL SHEETS 15

STD. NO. STD.33PCBB1_30

12/2/2014
12:09:45 PM
User: blanning
Filename: P:\NC Bridges\M13012 - Div 08 Bridge Replacements_Summit\M13012.03_Randolph 232\17BP8R77\Structures\17BP8R77_SD_BBU1.dgn

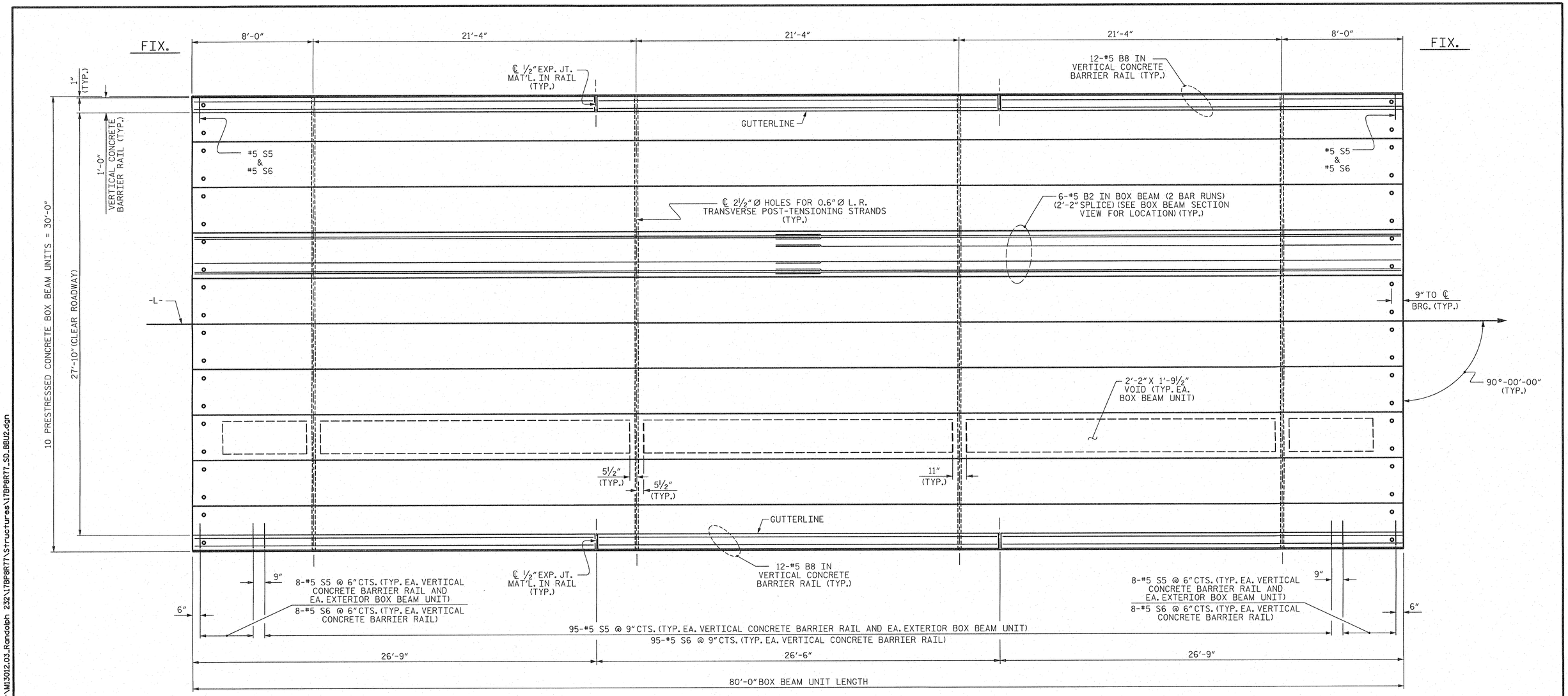

PLAN OF UNIT

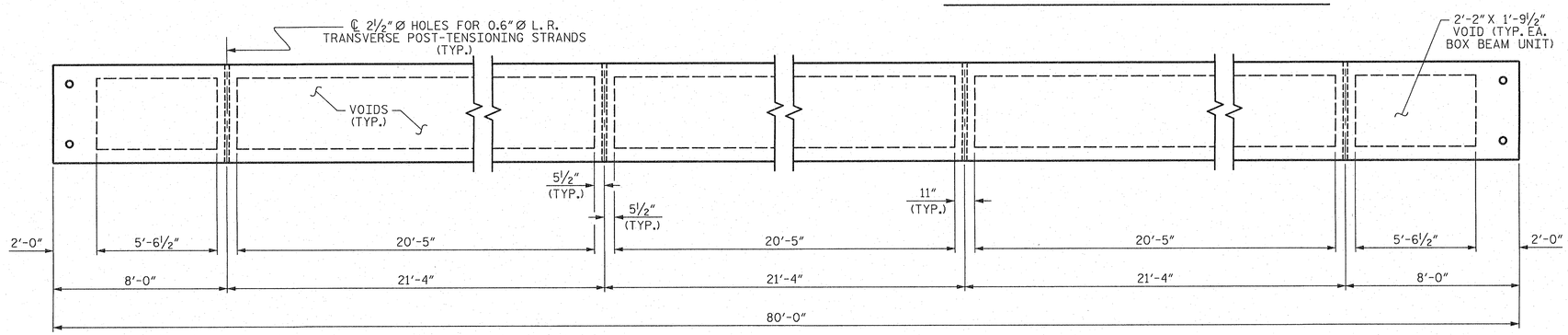

DIAPHRAGM AND VOID LAYOUT

PROJECT NO. 17BP.8.R.77

RANDOLPH COUNTY

STATION: 13+00.00 -L-

SHEET 2 OF 5

STATE OF NORTH CAROLINA
DEPARTMENT OF TRANSPORTATION
RALEIGH

PLAN OF 80' UNIT
27'-10" CLEAR ROADWAY
90° SKEW

NORTH CAROLINA PROFESSIONAL SEAL 24939 ENGINEER BYRON E. ATKINSON
12/02/14

ASSEMBLED BY:	B.E. LANNING	DATE:	10/14
CHECKED BY :	B.E. ATKINSON	DATE:	10/14
DESIGN ENGINEER OF RECORD:	B.E. ATKINSON	DATE:	10/14
DRAWN BY : DGE 8/11	REV. 8/14	MAA/TMG	
CHECKED BY : TMG 11/11			

MI ENGINEERING
1011 SCHAUB DRIVE, SUITE 100
RALEIGH, NC 27606
(919) 851-6606
FIRM PE NUMBER : P-0671

REVISIONS								SHEET NO.
NO.	BY:	DATE:	NO.	BY:	DATE:			S-5
1			3					TOTAL SHEETS
2			4					15

STD. NO. 33PCBB_30_90S_80L

12/2/2014
12:09:47 PM
User: blanning
Filename: P:\NC Bridges\MI3012 - Div 08 Bridge Replacements_Summit+MI3012.03_Randolph 232\17BP8R77\Structures\17BP8R77_SD_BBU2.dgn

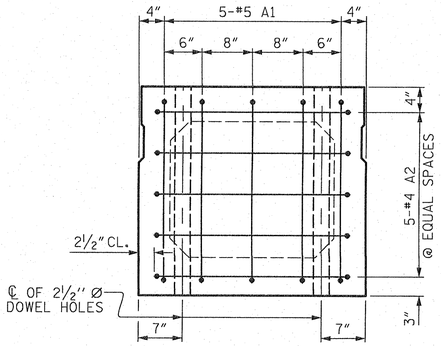

END ELEVATION

SHOWING PLACEMENT OF #5 & #4 "A" BARS AND LOCATION OF DOWEL HOLES.
(INTERIOR BOX BEAM SECTION SHOWN-EXTERIOR SECTION SIMILAR EXCEPT SHEAR KEY LOCATION. STRAND LAYOUT NOT SHOWN.)

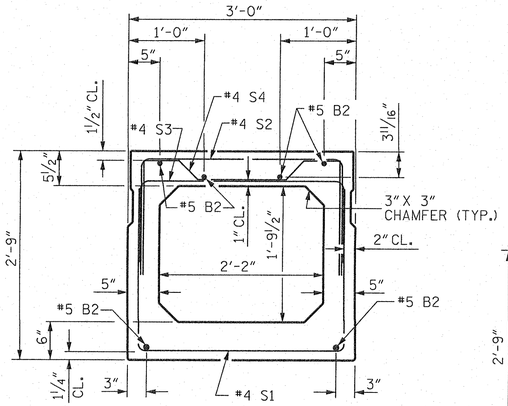

INTERIOR BOX BEAM SECTION

(STRAND LAYOUT NOT SHOWN)

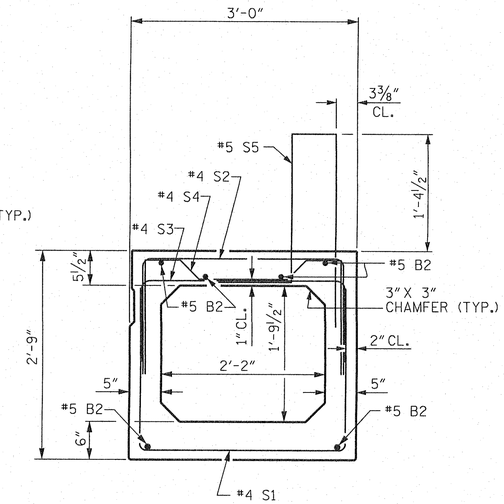

EXTERIOR BOX BEAM SECTION

(STRAND LAYOUT NOT SHOWN)

0.6" Ø LOW RELAXATION STRAND LAYOUT

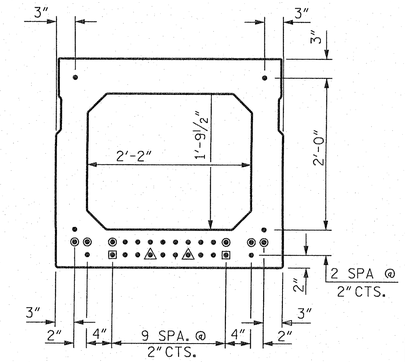

TYPICAL STRAND LOCATION

(24 STRANDS REQUIRED)

DEBONDING LEGEND

- ● FULLY BONDED STRANDS
- ▣ STRANDS DEBONDED FOR 4'-0" FROM END OF GIRDER
- ◉ STRANDS DEBONDED FOR 10'-0" FROM END OF GIRDER
- ⊙ OPTIONAL FULL LENGTH DEBONDED STRANDS. THESE STRANDS ARE NOT REQUIRED. IF THE FABRICATOR CHOOSES TO INCLUDE THESE STRANDS IN THE BOX BEAM UNIT, THE STRANDS SHALL BE DEBONDED FOR THE FULL LENGTH OF THE UNIT AT NO ADDITIONAL COST.

BOND SHALL BE BROKEN ON STRANDS AS SHOWN FOR THE SPECIFIED LENGTH FROM EACH END OF THE BOX BEAM. SEE STANDARD SPECIFICATIONS ARTICLE 1078-7.

BAR TYPES

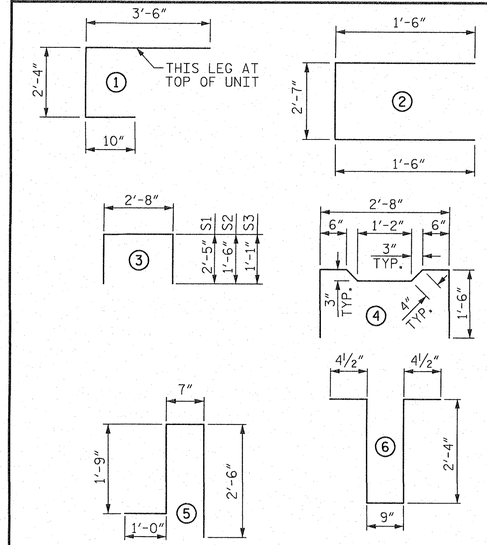

ALL BAR DIMENSIONS ARE OUT TO OUT.

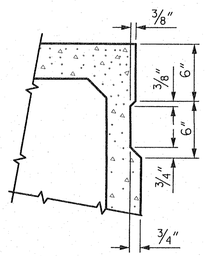

SHEAR KEY DETAIL

NOTE: OMIT SHEAR KEY ON OUTSIDE FACE OF EXTERIOR BOX BEAMS.

GRADE 270 STRANDS	
	0.6" Ø L.R.
AREA (SQUARE INCHES)	0.217
ULTIMATE STRENGTH (LBS. PER STRAND)	58,600
APPLIED PRESTRESS (LBS. PER STRAND)	43,950

BILL OF MATERIAL FOR ONE BOX BEAM SECTION

				EXTERIOR UNIT		INTERIOR UNIT	
BAR	NUMBER	SIZE	TYPE	LENGTH	WEIGHT	LENGTH	WEIGHT
A1	10	#5	1	6'-8"	70	6'-8"	70
A2	34	#4	2	5'-7"	127	5'-7"	127
B2	12	#5	STR	40'-11"	512	40'-11"	512
K1	12	#4	6	6'-2"	49	6'-2"	49
K2	8	#4	STR	2'-7"	14	2'-7"	14
S1	66	#4	3	7'-6"	331	7'-6"	331
S2	66	#4	3	5'-8"	250	5'-8"	250
S3	113	#4	3	4'-10"	365	4'-10"	365
S4	47	#4	4	5'-10"	183	5'-10"	183
✻ S5	111	#5	5	5'-10"	675	--	--
REINFORCING STEEL					1901 LBS.		1901 LBS.
✻ EPOXY COATED REINF. STEEL					675 LBS.		
8000 P.S.I. CONCRETE					14.2 CU. YDS.		14.1 CU. YDS.
0.6" Ø L.R. STRANDS					No. 24		No. 24

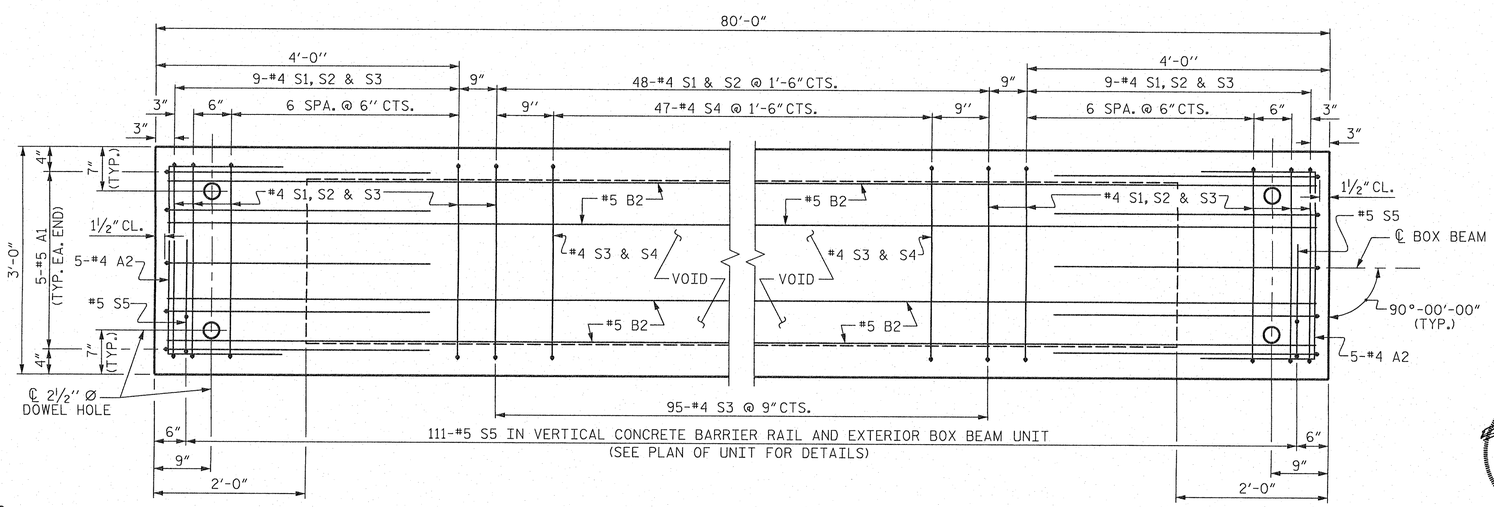

PLAN OF BOX BEAM

EXTERIOR UNIT SHOWN, INTERIOR UNIT SIMILAR EXCEPT OMIT #5 S5 BARS.
FOR LOCATION OF DIAPHRAGMS, SEE "PLAN OF UNIT".
FOR THREADED INSERTS, SEE "THREADED INSERT DETAIL".
FOR REINFORCING STEEL IN DIAPHRAGMS, SEE "DOUBLE DIAPHRAGM DETAILS".

PROJECT NO. 17BP.8.R.77
RANDOLPH COUNTY
STATION: 13+00.00 -L-

NORTH CAROLINA PROFESSIONAL SEAL 24935 ENGINEER BYRON E. ATKINSON
12/02/14

STATE OF NORTH CAROLINA
DEPARTMENT OF TRANSPORTATION
RALEIGH
STANDARD

3'-0" X 2'-9" PRESTRESSED CONCRETE BOX BEAM UNIT

MI ENGINEERING
1011 SCHAUB DRIVE, SUITE 100
RALEIGH, NC 27606
(919) 851-6606
FIRM PE NUMBER : P-0671

REVISIONS							
NO.	BY:	DATE:	NO.	BY:	DATE:	SHEET NO.	S-6
1			3			TOTAL SHEETS	15
2			4				

ASSEMBLED BY: B.E. LANNING		DATE: 10/14	
CHECKED BY : B.E. ATKINSON		DATE: 10/14	
DESIGN ENGINEER OF RECORD: B.E. ATKINSON		DATE: 10/14	
DRAWN BY : DGE 10/11	REV. 8/14	MAA/TMG	
CHECKED BY : TMG 11/11			

12/2/2014
12:09:49 PM
User: blanning
Filename: P:\NC Bridges\MI3012 - Div 08 Bridge Replacements_Summit\MI3012.03_Randolph 232\17BP8R77\Structures\17BP8R77_SD_BBU3.dgn

STD. NO. 33PCBB4_90S_80L

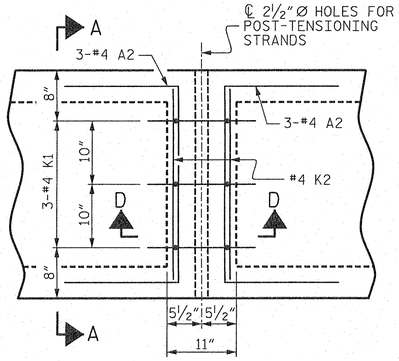

PLAN

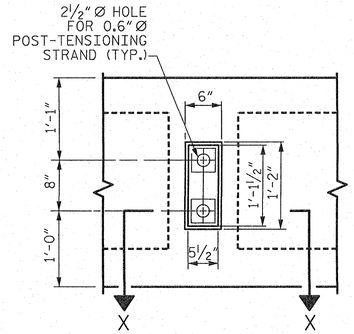

VIEW Y-Y

SHOWING ELEVATION VIEW OF GROUTED RECESS

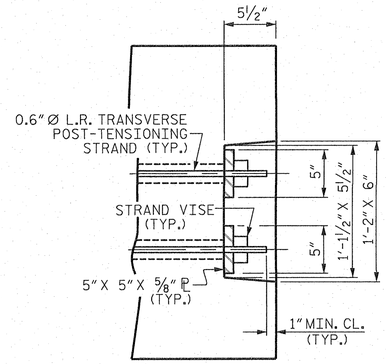

DETAIL "C"

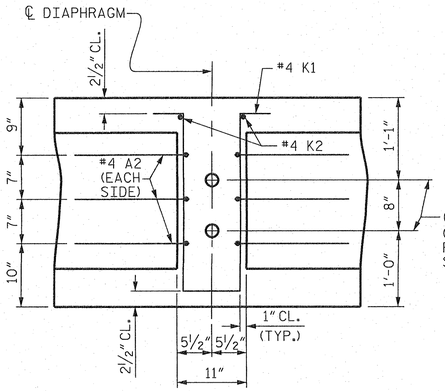

SECTION D-D

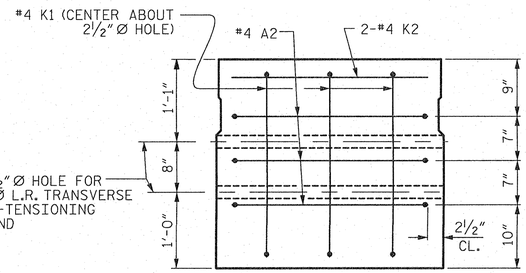

SECTION A-A

VOIDS NOT SHOWN

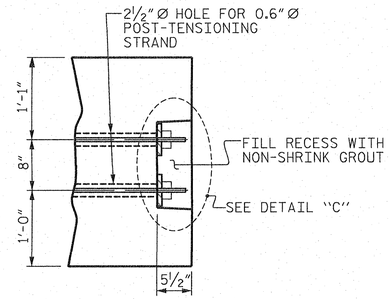

PART SECTION AT RECESS

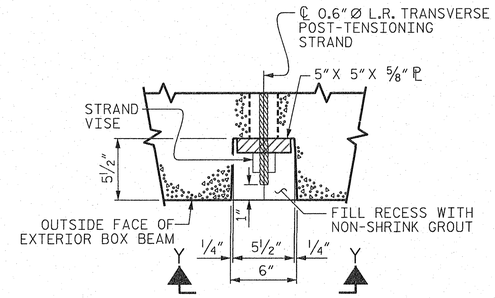

SECTION X-X

SHOWING PLAN VIEW OF GROUTED RECESS

GROUTED RECESS DETAIL AT END OF POST-TENSIONED STRANDS OF EXTERIOR BOX BEAM

DOUBLE DIAPHRAGM DETAILS

#4 "S" BARS NOT SHOWN. #4 "S" BARS MAY BE SHIFTED SLIGHTLY TO CLEAR 2½" Ø HOLE.

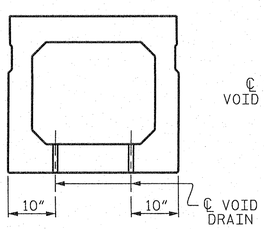

SECTION B-B

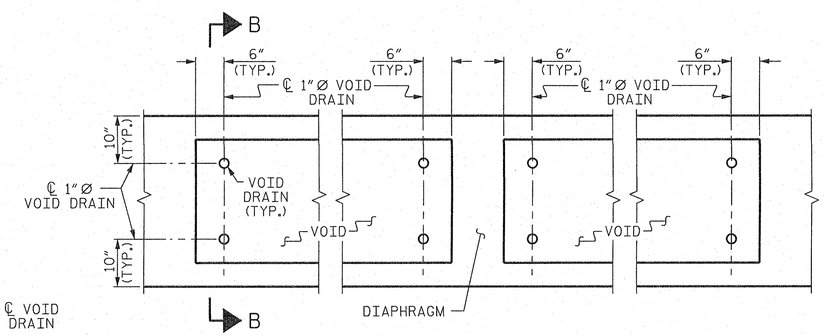

PART PLAN

VOID DRAIN DETAILS

(DIMENSIONS SHOWN ARE TYPICAL FOR EACH VOID)

DEAD LOAD DEFLECTION AND CAMBER	
	3'-0" x 2'-9"
80' BOX BEAM UNIT	0.6"Ø L.R. STRAND
CAMBER (SLAB ALONE IN PLACE)	1¾" ↑
DEFLECTION DUE TO SUPERIMPOSED DEAD LOAD**	½" ↓
FINAL CAMBER	1¼" ↑

** INCLUDES FUTURE WEARING SURFACE

PROJECT NO. 17BP.8.R.77

RANDOLPH COUNTY

STATION: 13+00.00 -L-

SHEET 4 OF 5

NORTH CAROLINA PROFESSIONAL SEAL 24939 ENGINEER BIRON E. ATKINSON 12/2/14

STATE OF NORTH CAROLINA
DEPARTMENT OF TRANSPORTATION
RALEIGH

STANDARD
3'-0" X 2'-9"
PRESTRESSED CONCRETE
BOX BEAM UNIT

ASSEMBLED BY:	B.E. LANNING	DATE: 10/14
CHECKED BY :	B.E. ATKINSON	DATE: 10/14
DESIGN ENGINEER OF RECORD:	B.E. ATKINSON	DATE: 10/14
DRAWN BY : DGE 10/11	REV. 8/14	MAA/TMG
CHECKED BY : TMG 11/11		

MI ENGINEERING
1011 SCHAUB DRIVE, SUITE 100
RALEIGH, NC 27606
(919) 851-6606
FIRM PE NUMBER : P-0671

REVISIONS								
NO.	BY:	DATE:	NO.	BY:	DATE:		SHEET NO.	
1			3				S-7	
2			4				TOTAL SHEETS	
							15	

STD.NO.33PCBB5_90S

12/2/2014
12:09:51 PM
User: blanning
Filename: P:\NC Bridges\M13012 - Div 08 Bridge Replacements_Summit\M13012.03_Randolph 232\17BP8R77\Structures\17BP8R77_SD_BBU4.dgn

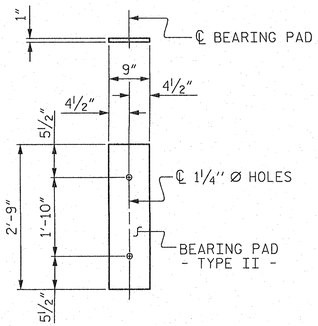

FIXED END

(TYPE II - 20 REQ'D.)

ELASTOMERIC BEARING DETAILS

ELASTOMER IN ALL BEARINGS SHALL BE 60 DUROMETER HARDNESS.

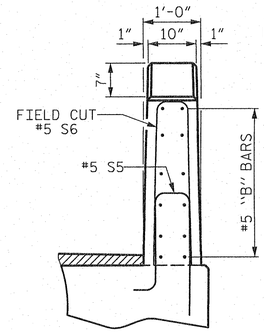

END VIEW

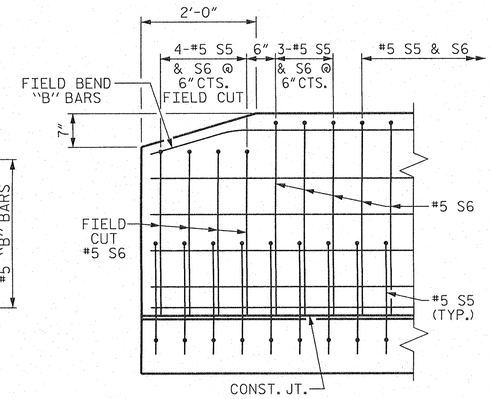

SIDE VIEW

END OF RAIL DETAILS

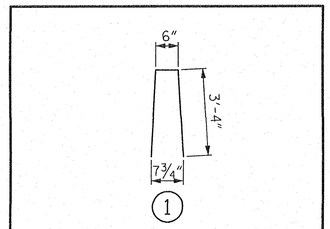

BAR TYPE

BAR DIMENSIONS ARE OUT TO OUT

BOX BEAM UNITS REQUIRED

	NUMBER	LENGTH	TOTAL LENGTH
EXTERIOR B.B.	2	80'-0"	160'-0"
INTERIOR B.B.	8	80'-0"	640'-0"
TOTAL	10	———	800'-0"

BILL OF MATERIAL FOR VERTICAL CONCRETE BARRIER RAIL

BAR	BARS PER PAIR OF EXTERIOR UNITS	SIZE	TYPE	LENGTH	WEIGHT
	80' UNIT				
✳ B8	72	#5	STR	26'-3"	1971
✳ S6	222	#5	1	7'-2"	1659
✳ EPOXY COATED REINFORCING STEEL			LBS.		3630
CLASS AA CONCRETE			CU.YDS.		20.7
TOTAL VERTICAL CONCRETE BARRIER RAIL			LN. FT.		160.0

GUTTERLINE ASPHALT THICKNESS & RAIL HEIGHT

	ASPHALT OVERLAY THICKNESS @ MID-SPAN	RAIL HEIGHT @ MID-SPAN
80' UNITS	2¼"	3'-8¼"

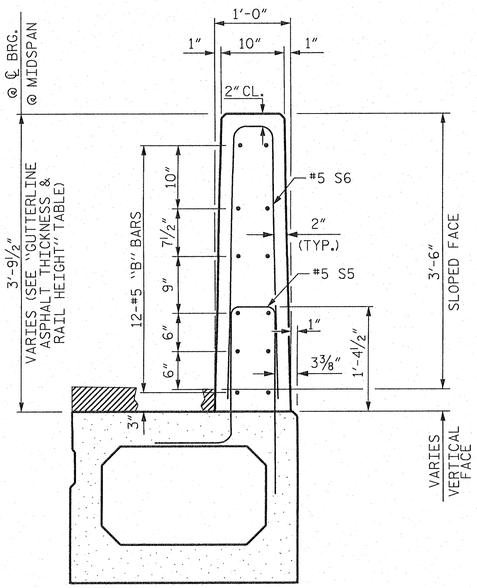

SECTION THRU RAIL

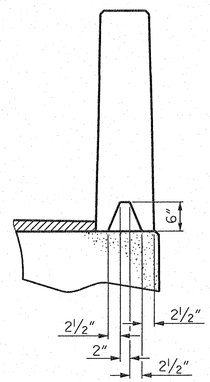

SECTION S-S

AT DAM IN OPEN JOINT
(THIS IS TO BE USED ONLY
WHEN SLIP FORM IS USED)

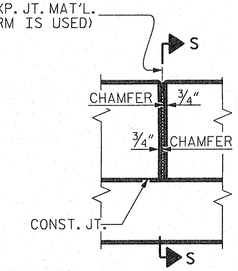

ELEVATION AT EXPANSION JOINTS

VERTICAL CONCRETE BARRIER RAIL DETAILS

PROJECT NO. 17BP.8.R.77

RANDOLPH COUNTY

STATION: 13+00.00 -L-

SHEET 5 OF 5

STATE OF NORTH CAROLINA
DEPARTMENT OF TRANSPORTATION
RALEIGH

3'-0" X 2'-9" PRESTRESSED CONCRETE BOX BEAM UNIT

NORTH CAROLINA PROFESSIONAL SEAL 24939 ENGINEER BYRON E. ATKINSON 12/02/14

MI ENGINEERING
1011 SCHAUB DRIVE, SUITE 100
RALEIGH, NC 27606
(919) 851-6606
FIRM PE NUMBER : P-0671

REVISIONS							SHEET NO.
NO.	BY:	DATE:	NO.	BY:	DATE:		S-8
1			3				TOTAL SHEETS
2			4				15

STD. NO. 33PCBB8_90S

ASSEMBLED BY: B.E. LANNING	DATE: 10/14	
CHECKED BY : B.E. ATKINSON	DATE: 10/14	
DESIGN ENGINEER OF RECORD: B.E. ATKINSON	DATE: 10/14	
DRAWN BY : DGE 10/11	REV. 8/14	MAA/TMG
CHECKED BY : TMG 11/11		

12/2/2014
12:09:53 PM
User: blanning
Filename: P:\NC Bridges\MI3012 - Div 08 Bridge Replacements_Summit\MI3012.03_Randolph 232\17BP8R77\Structures\17BP8R77_SD_BBU5.dgn

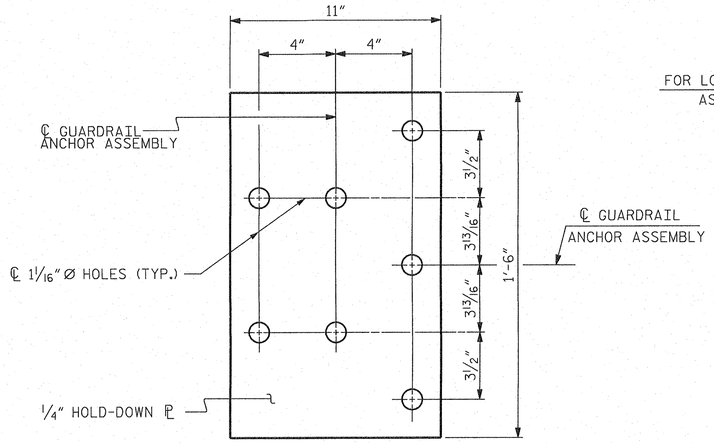

PLAN

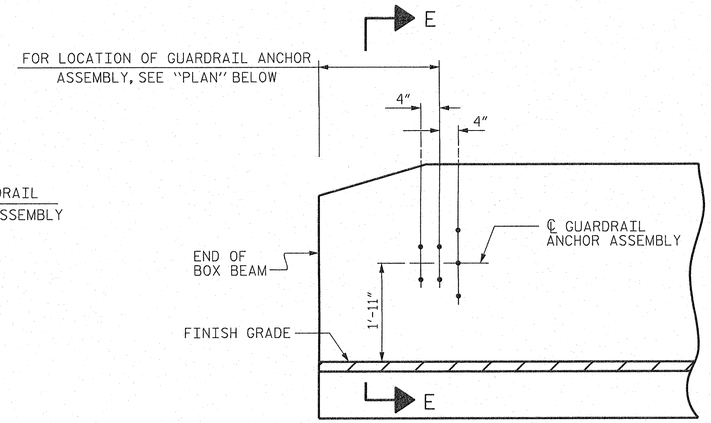

ELEVATION

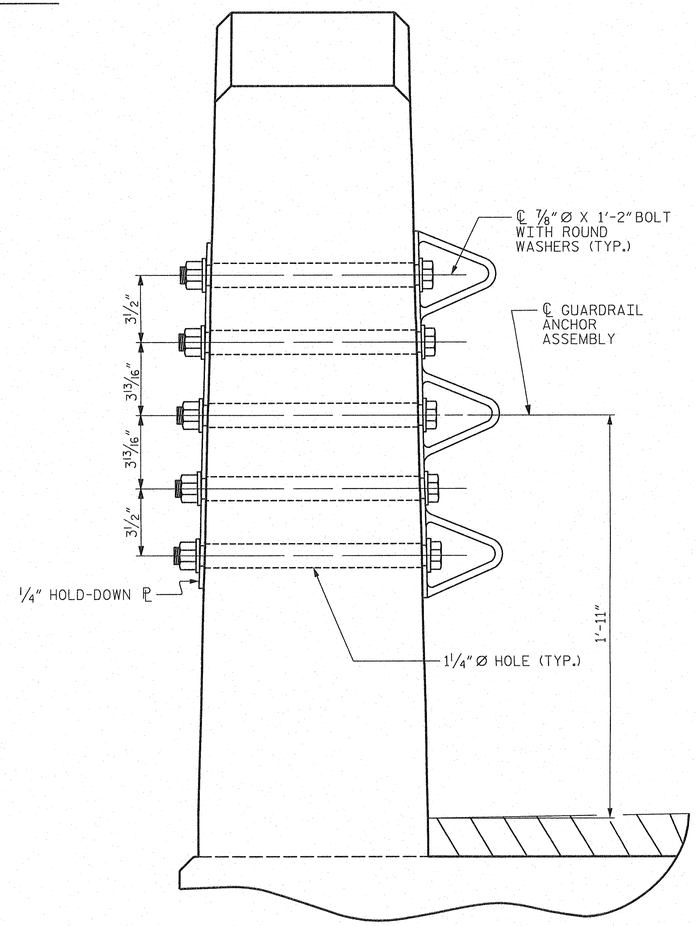

SECTION E-E

GUARDRAIL ANCHOR ASSEMBLY DETAILS

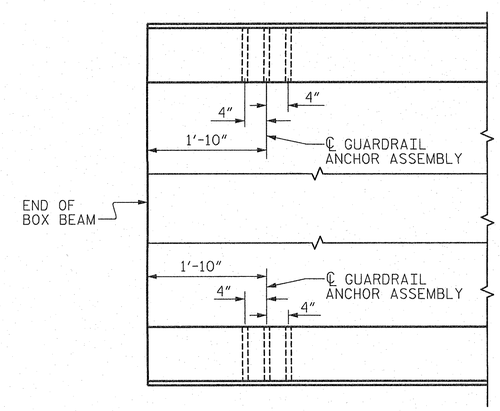

PLAN

LOCATION OF ANCHORS FOR GUARDRAIL

END BENT 1 SHOWN, END BENT 2 SIMILAR.

NOTES

THE GUARDRAIL ANCHOR ASSEMBLY SHALL CONSIST OF A 1/4" HOLD DOWN PLATE AND 7 - 7/8" Ø BOLTS WITH NUTS AND WASHERS.

THE HOLD-DOWN PLATE SHALL CONFORM TO AASHTO M270 GRADE 36. AFTER FABRICATION, THE HOLD-DOWN PLATE SHALL BE HOT-DIP GALVANIZED IN ACCORDANCE WITH AASHTO M111.

BOLTS SHALL CONFORM TO THE REQUIREMENTS OF ASTM A307 AND NUTS SHALL CONFORM TO THE REQUIREMENTS OF AASHTO M291. BOLTS, NUTS AND WASHERS SHALL BE GALVANIZED. (AT THE CONTRACTOR'S OPTION, STAINLESS STEEL BOLTS, NUTS AND WASHERS MAY BE USED AS AN ALTERNATE FOR THE 7/8" Ø GALVANIZED BOLTS, NUTS AND WASHERS. THEY SHALL CONFORM TO OR EXCEED THE MECHANICAL REQUIREMENTS OF ASTM A307. THE USE OF THIS ALTERNATE SHALL BE APPROVED BY THE ENGINEER.)

THE GUARDRAIL ANCHOR ASSEMBLY IS REQUIRED AT ALL POINTS WHERE APPROACH GUARDRAIL IS TO BE ATTACHED TO THE END OF BARRIER RAIL. FOR POINTS OF ATTACHMENT, SEE SKETCH.

AFTER INSTALLATION, THE EXPOSED THREAD OF THE BOLT SHALL BE BURRED WITH A SHARP POINTED TOOL.

THE COST OF THE GUARDRAIL ANCHOR ASSEMBLY SHALL BE INCLUDED IN THE UNIT CONTRACT PRICE BID FOR VERTICAL CONCRETE BARRIER RAIL.

THE VERTICAL REINFORCING BARS MAY BE SHIFTED SLIGHTLY IN THE VERTICAL CONCRETE BARRIER RAIL TO CLEAR ASSEMBLY BOLTS.

THE 1 1/4" Ø HOLES SHALL BE FORMED OR DRILLED WITH A CORE BIT. IMPACT TOOLS WILL NOT BE PERMITTED. ANY CONCRETE DAMAGED BY THIS WORK SHALL BE REPAIRED TO THE SATISFACTION OF THE ENGINEER.

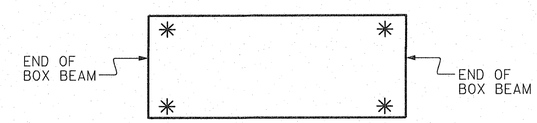

SKETCH SHOWING POINTS OF ATTACHMENT

✳ DENOTES GUARDRAIL ANCHOR ASSEMBLY

PROJECT NO. 17BP.8.R.77

RANDOLPH COUNTY

STATION: 13+00.00 -L-

STATE OF NORTH CAROLINA
DEPARTMENT OF TRANSPORTATION
RALEIGH

STANDARD
GUARDRAIL ANCHORAGE FOR VERTICAL CONCRETE BARRIER RAIL

MI ENGINEERING
1011 SCHAUB DRIVE, SUITE 100
RALEIGH, NC 27606
(919) 851-6606
FIRM PE NUMBER : P-0671

REVISIONS						
NO.	BY:	DATE:	NO.	BY:	DATE:	
1			3			
2			4			

SHEET NO. S-9
TOTAL SHEETS 15

(SHT 1) STD. NO. GRA3

ASSEMBLED BY:	B.E. LANNING	DATE:	10/14
CHECKED BY :	B.E. ATKINSON	DATE:	10/14
DESIGN ENGINEER OF RECORD:	B.E. ATKINSON	DATE:	10/14
DRAWN BY : MAA 5/10	ADDED 5/6/10		
CHECKED BY : GM 5/10	REV. 10/1/11	MAA/GM	
	REV. 12/5/11	MAA/GM	

12/2/2014
12:09:56 PM
User: blanning
Filename: P:\NC Bridges\M13012 - Div 08 Bridge Replacements_Summit\M13012.03_Randolph 232\17BP8R77\Structures\17BP8R77_SD_GRA1.dgn

NOTES

STIRRUPS IN CAP MAY BE SHIFTED AS NECESSARY TO CLEAR DOWELS.

THE CONCRETE IN THE SHADED AREA OF THE WING SHALL BE POURED AFTER THE VERTICAL CONCRETE BARRIER RAIL IS CAST IF SLIP FORMING IS USED.

FOR PILE SPLICE DETAILS, SEE SHEET 4 OF 4.

FOR WING DETAILS, SEE SHEET 3 OF 4.

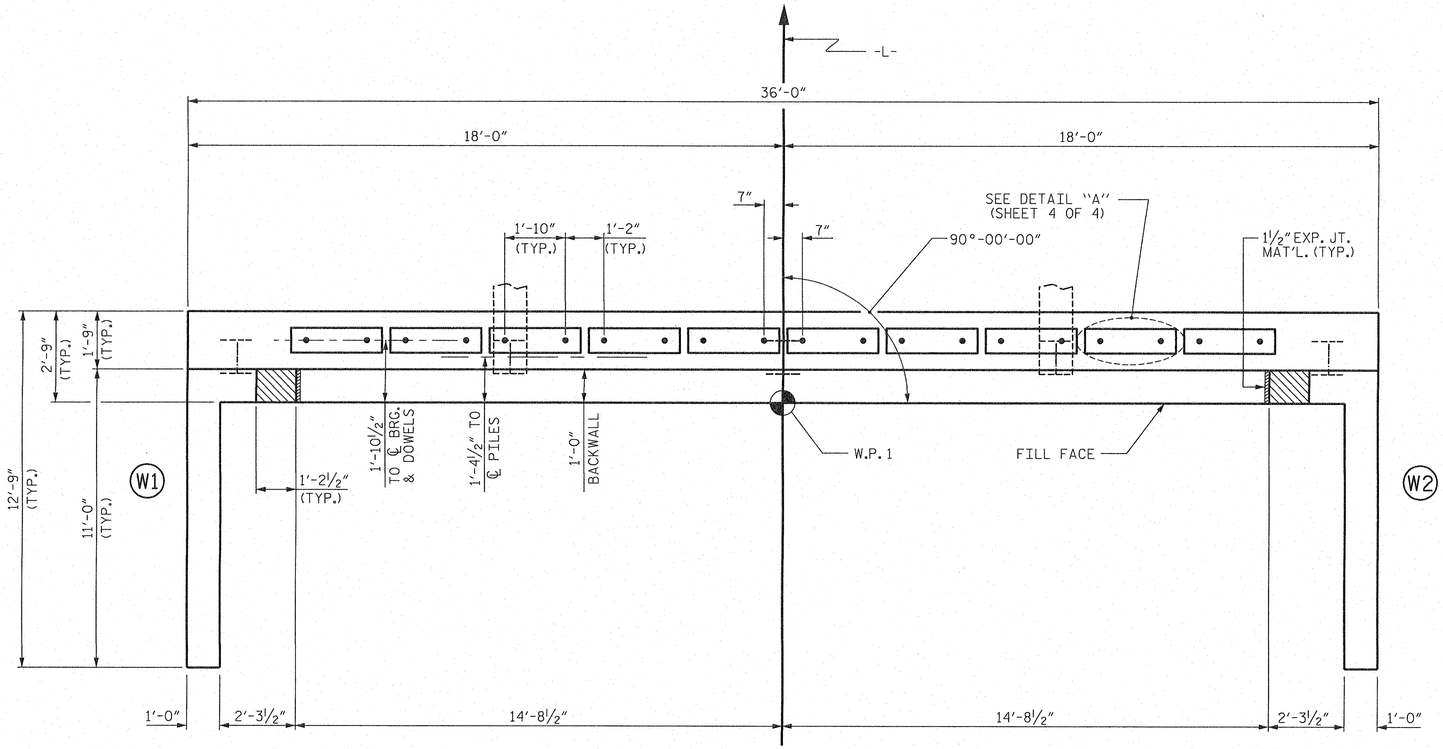

PLAN

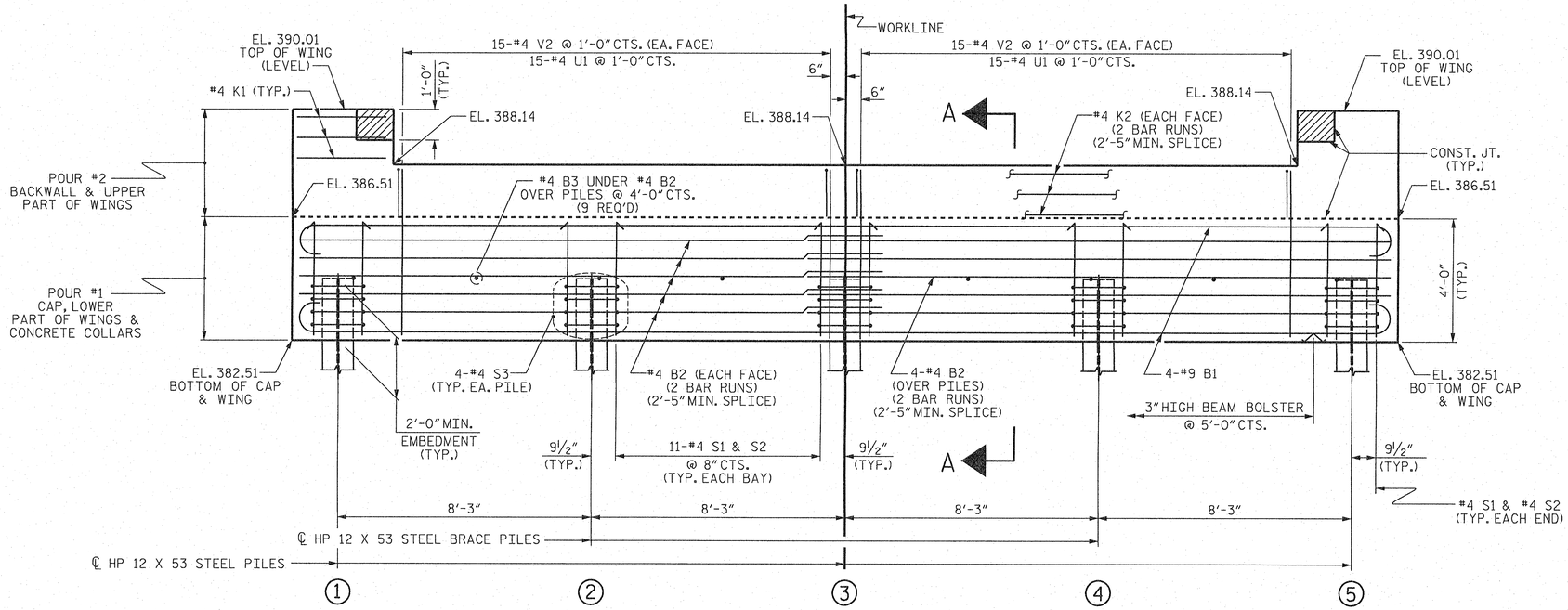

ELEVATION

WINGS NOT SHOWN FOR CLARITY.
FOR SECTION A-A, SEE SHEET 4 OF 4.
CONCRETE COLLARS FOR STEEL PILES NOT SHOWN IN PLAN AND ELEVATION VIEWS FOR CLARITY.
SEE "CORROSION PROTECTION FOR STEEL PILES DETAIL", SHEET 4 OF 4.

PROJECT NO. 17BP.8.R.77
RANDOLPH COUNTY
STATION: 13+00.00 -L-

SHEET 1 OF 4

STATE OF NORTH CAROLINA
DEPARTMENT OF TRANSPORTATION
RALEIGH

SUBSTRUCTURE

END BENT No. 1

NORTH CAROLINA PROFESSIONAL SEAL 24939 ENGINEER BYRON E. ATKINSON
12/02/14

MI ENGINEERING
1011 SCHAUB DRIVE, SUITE 100
RALEIGH, NC 27606
(919) 851-6606
FIRM PE NUMBER : P-0671

REVISIONS							
NO.	BY:	DATE:	NO.	BY:	DATE:	SHEET NO.	S-10
1			3			TOTAL SHEETS	15
2			4				

ASSEMBLED BY:	B.E. LANNING	DATE:	10/14
CHECKED BY :	B.E. ATKINSON	DATE:	10/14
DESIGN ENGINEER OF RECORD:	B.E. ATKINSON	DATE:	10/14
DRAWN BY :	WJH 12/11	REV. 8/14	MAA/TMG
CHECKED BY :	AAC 12/11		

12/2/2014
12:09:58 PM
User: blanning
Filename: P:\NC Bridges\M3012 - Div 08 Bridge Replacements_Summit\M3012.03_Randolph 232\17BP8R77\Structures\17BP8R77_SD_EB1.dgn

STD. NO. EB_30_90S4_33BB

NOTES

STIRRUPS IN CAP MAY BE SHIFTED AS NECESSARY TO CLEAR DOWELS.

THE CONCRETE IN THE SHADED AREA OF THE WING SHALL BE POURED AFTER THE VERTICAL CONCRETE BARRIER RAIL IS CAST IF SLIP FORMING IS USED.

FOR PILE SPLICE DETAILS, SEE SHEET 4 OF 4.

FOR WING DETAILS, SEE SHEET 3 OF 4.

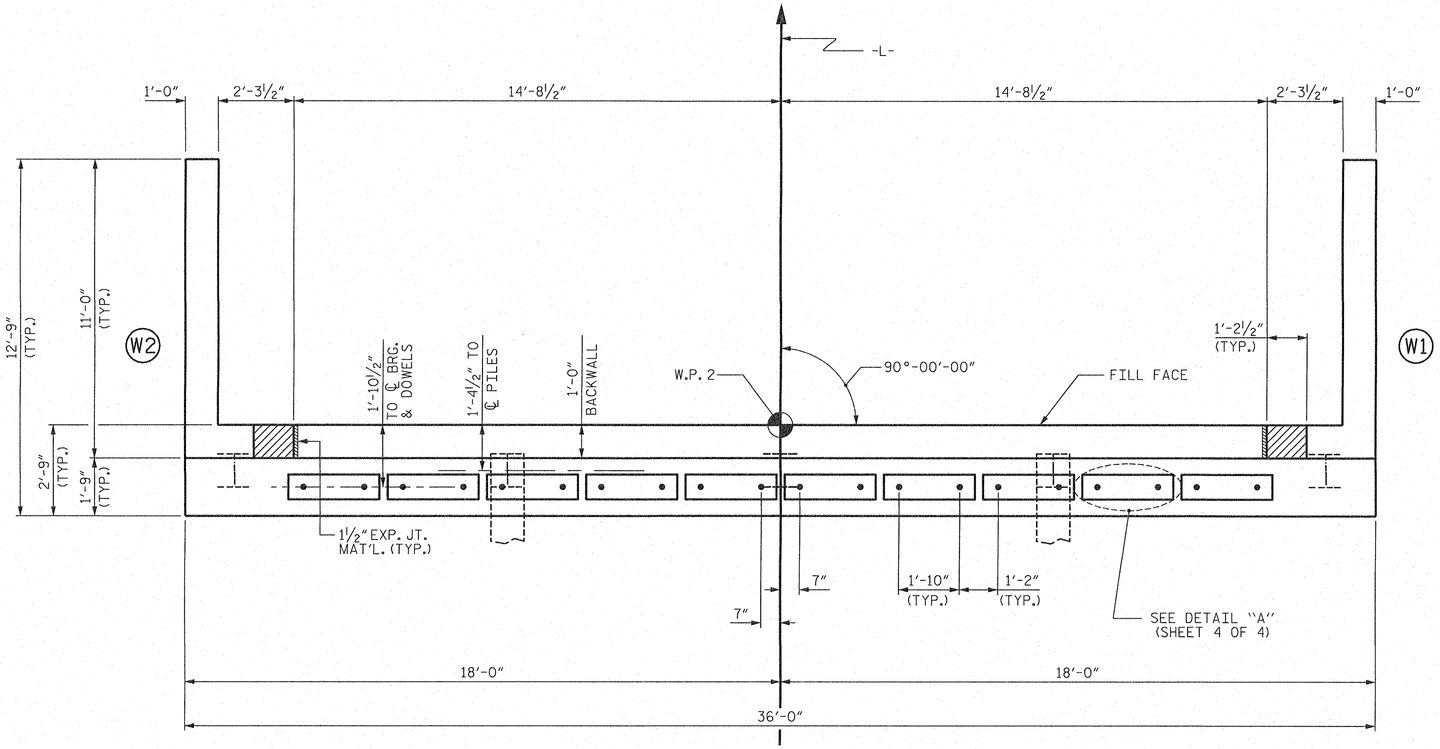

PLAN

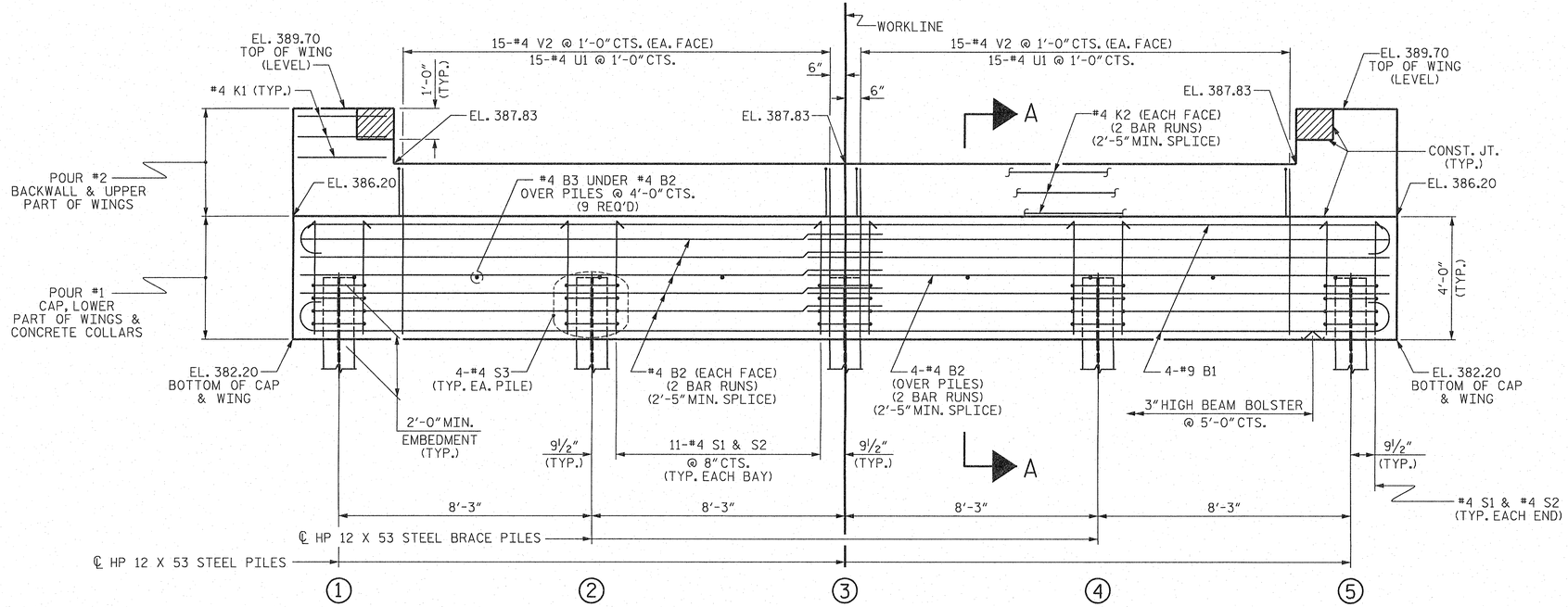

ELEVATION

WINGS NOT SHOWN FOR CLARITY.
FOR SECTION A-A, SEE SHEET 4 OF 4.
CONCRETE COLLARS FOR STEEL PILES NOT SHOWN IN PLAN AND ELEVATION VIEWS FOR CLARITY.
SEE "CORROSION PROTECTION FOR STEEL PILES DETAIL", SHEET 4 OF 4.

NORTH CAROLINA PROFESSIONAL SEAL 24939 ENGINEER BYRON E. ATKINSON 12/02/14

PROJECT NO. 17BP.8.R.77
RANDOLPH COUNTY
STATION: 13+00.00 -L-

SHEET 2 OF 4

STATE OF NORTH CAROLINA
DEPARTMENT OF TRANSPORTATION
RALEIGH

SUBSTRUCTURE

END BENT No. 2

ASSEMBLED BY: B.E. LANNING		DATE: 10/14	
CHECKED BY : B.E. ATKINSON		DATE: 10/14	
DESIGN ENGINEER OF RECORD: B.E. ATKINSON		DATE: 10/14	
DRAWN BY : WJH 12/11	REV. 8/14	MAA/TMG	
CHECKED BY : AAC 12/11			

MI ENGINEERING
1011 SCHAUB DRIVE, SUITE 100
RALEIGH, NC 27606
(919) 851-6606
FIRM PE NUMBER : P-0671

REVISIONS								SHEET NO.
NO.	BY:	DATE:	NO.	BY:	DATE:			S-11
1			3					TOTAL SHEETS
2			4					15

STD. NO. EB_30_90S4_33BB

12/2/2014
12:10:00 PM
User: planning
Filename: P:\NC Bridges\M13012 - Div 08 Bridge Replacements_Summit\M13012.03_Randolph 232\17BP8R77\Structures\17BP8R77_SD_EB2.dgn

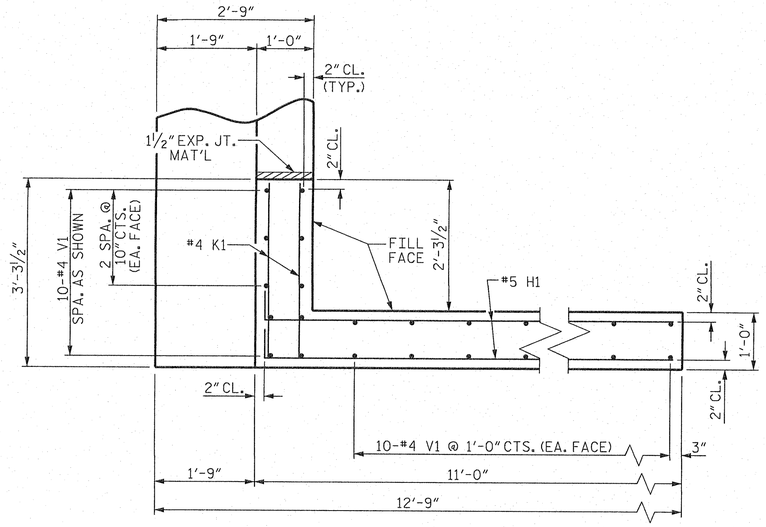

PLAN OF WING (W1)

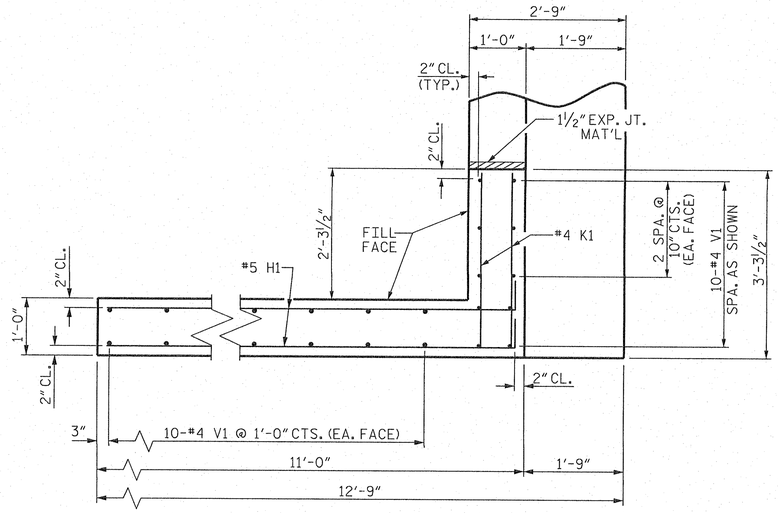

PLAN OF WING (W2)

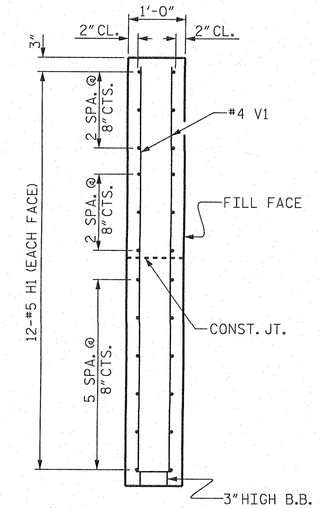

SECTION X-X

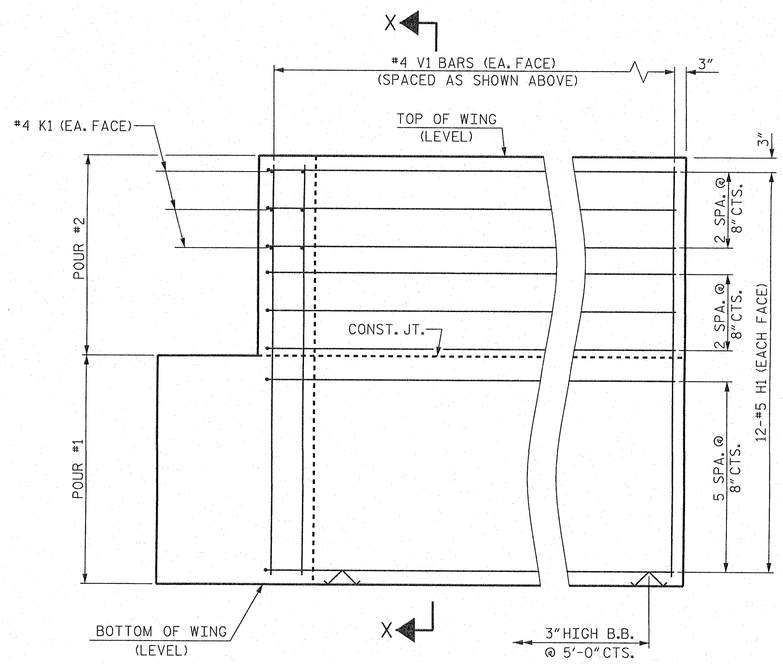

ELEVATION OF WING (W1)

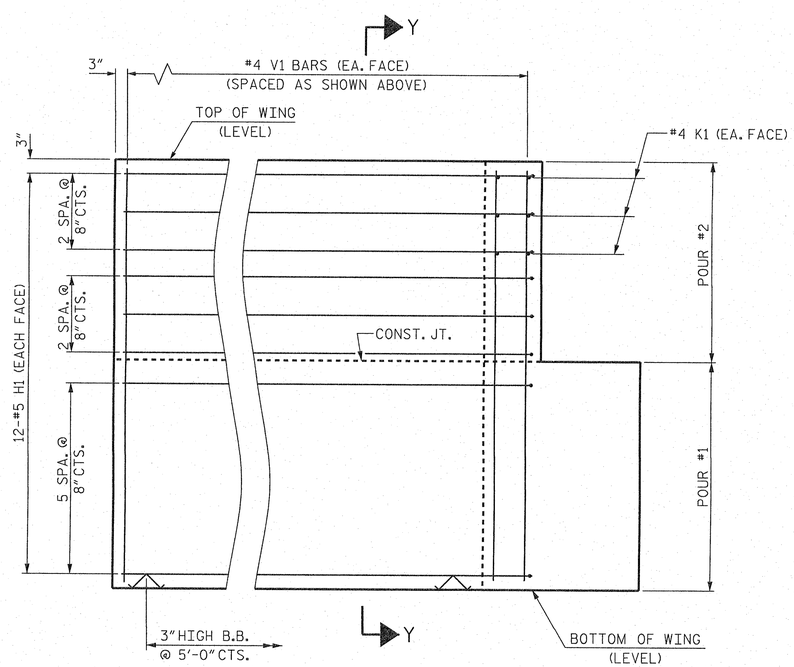

ELEVATION OF WING (W2)

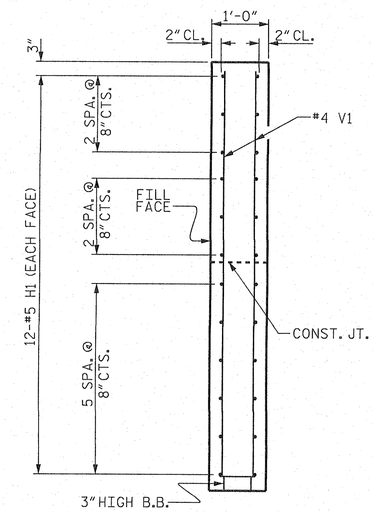

SECTION Y-Y

WING DETAILS

PROJECT NO. 17BP.8.R.77

RANDOLPH COUNTY

STATION: 13+00.00 -L-

SHEET 3 OF 4

STATE OF NORTH CAROLINA
DEPARTMENT OF TRANSPORTATION
RALEIGH

SUBSTRUCTURE

END BENT
WING DETAILS

NORTH CAROLINA PROFESSIONAL SEAL 24939 ENGINEER BYRON E. ATKINSON
12/22/14

ASSEMBLED BY: B.E. LANNING	DATE: 10/14
CHECKED BY : B.E. ATKINSON	DATE: 10/14
DESIGN ENGINEER OF RECORD: B.E. ATKINSON	DATE: 10/14
DRAWN BY : WJH 12/11	REV. 8/14 MAA/TMG
CHECKED BY : AAC 12/11	

MI ENGINEERING
1011 SCHAUB DRIVE, SUITE 100
RALEIGH, NC 27606
(919) 851-6606
FIRM PE NUMBER : P-0671

REVISIONS							
NO.	BY:	DATE:	NO.	BY:	DATE:	SHEET NO.	
1			3			S-12	
2			4			TOTAL SHEETS	
						15	

STD. NO. EB_30_90S4_33BB

12/2/2014
12:10:02 PM
User: blanning
Filename: P:\NC Bridges\MI3012 - Div 08 Bridge Replacements_Summit\MI3012.03_Randolph 232\17BP8R77\Structures\17BP8R77_SD_EB3.dgn

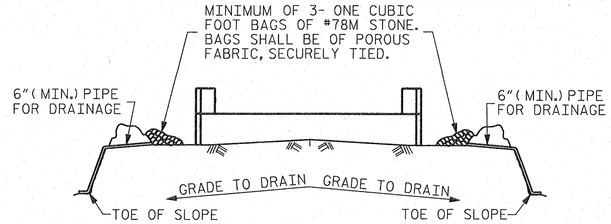

BAGGED STONE AND PIPE SHALL BE PLACED IMMEDIATELY AFTER COMPLETION OF END BENT EXCAVATION. PIPE MAY BE EITHER CONCRETE, CORRUGATED STEEL, CORRUGATED ALUMINUM ALLOY, OR CORRUGATED PLASTIC. PERFORATED PIPE WILL NOT BE ALLOWED.

BAGGED STONE SHALL REMAIN IN PLACE UNTIL THE ENGINEER DIRECTS THAT IT BE REMOVED. THE CONTRACTOR SHALL REMOVE AND DISPOSE OF SILT ACCUMULATIONS AT BAGGED STONE WHEN SO DIRECTED BY THE ENGINEER. BAGS SHALL BE REMOVED AND REPLACED WHENEVER THE ENGINEER DETERMINES THAT THEY HAVE DETERIORATED AND LOST THEIR EFFECTIVENESS.

NO SEPARATE PAYMENT WILL BE MADE FOR THIS WORK AND THE ENTIRE COST OF THIS WORK SHALL BE INCLUDED IN THE UNIT CONTRACT PRICE BID FOR THE SEVERAL PAY ITEMS.

TEMPORARY DRAINAGE AT END BENT

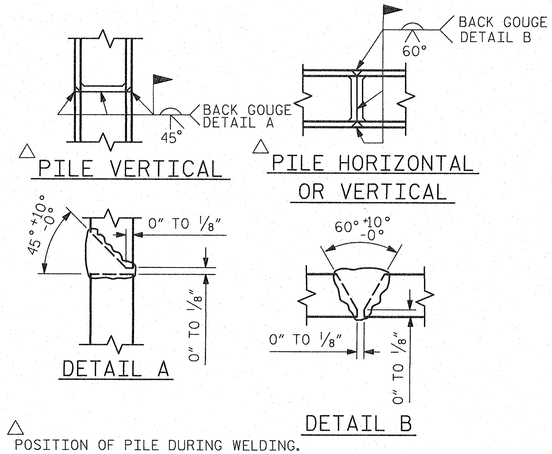

△ POSITION OF PILE DURING WELDING.

PILE SPLICE DETAILS

BAR TYPES

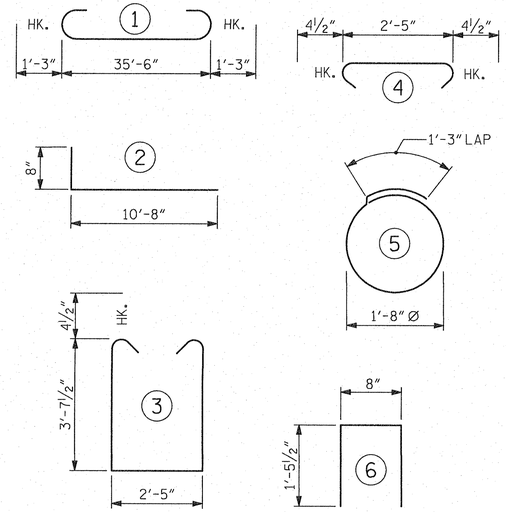

ALL BAR DIMENSIONS ARE OUT TO OUT.

END BENT No. 1		END BENT No. 2	
HP 12 X 53 STEEL PILES		HP 12 X 53 STEEL PILES	
NO: 5	LIN. FT.= 75.0	NO: 5	LIN. FT.= 65.0
PILE EXCAVATION IN SOIL	45.0 LIN. FT.	PILE EXCAVATION IN SOIL	40.0 LIN. FT.
PILE EXCAVATION NOT IN SOIL	25.0 LIN. FT.	PILE EXCAVATION NOT IN SOIL	25.0 LIN. FT.

BILL OF MATERIAL FOR ONE END BENT

BAR	NO.	SIZE	TYPE	LENGTH	WEIGHT
B1	8	#9	1	38'-0"	1034
B2	28	#4	STR	19'-1"	357
B3	9	#4	STR	2'-5"	15
D1	20	#8	STR	2'-3"	120
H1	48	#5	2	11'-4"	567
K1	12	#4	STR	2'-11"	23
K2	12	#4	STR	19'-1"	153
S1	46	#4	3	10'-5"	320
S2	46	#4	4	3'-2"	97
S3	20	#4	5	6'-6"	87
U1	30	#4	6	3'-7"	72
V1	60	#4	STR	7'-2"	287
V2	60	#4	STR	5'-3"	210

REINFORCING STEEL (FOR ONE END BENT) 3342 LBS.

CLASS A CONCRETE BREAKDOWN (FOR ONE END BENT)

POUR #1 CAP, LOWER PART OF WINGS & COLLARS 18.5 C.Y.

POUR #2 BACKWALL & UPPER PART OF WINGS 5.2 C.Y.

TOTAL CLASS A CONCRETE 23.8 C.Y.

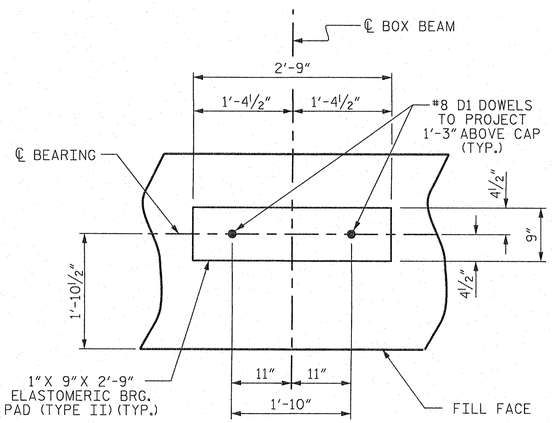

DETAIL "A"

(END BENT 1 SHOWN, END BENT 2 SIMILAR BY ROTATION)

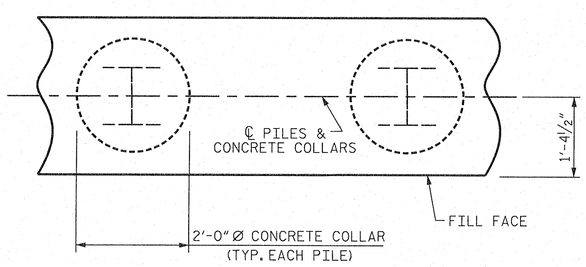

PLAN

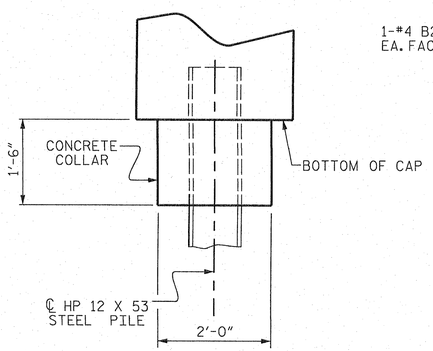

ELEVATION

CORROSION PROTECTION FOR STEEL PILES DETAIL

(END BENT 1 SHOWN, END BENT 2 SIMILAR BY ROTATION)

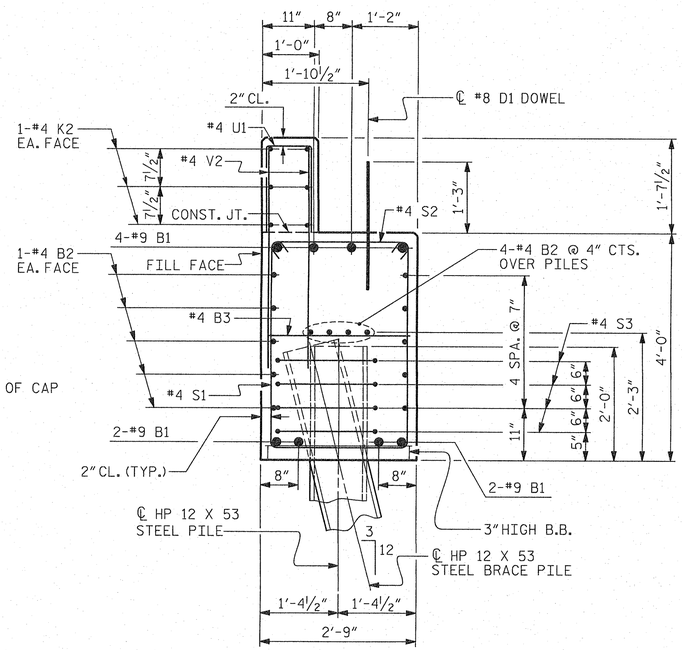

SECTION A-A

(CONCRETE COLLAR NOT SHOWN FOR CLARITY. SEE "CORROSION PROTECTION FOR STEEL PILES DETAIL.")

PROJECT NO. 17BP.8.R.77

RANDOLPH COUNTY

STATION: 13+00.00 -L-

SHEET 4 OF 4

STATE OF NORTH CAROLINA
DEPARTMENT OF TRANSPORTATION
RALEIGH

SUBSTRUCTURE

END BENT No. 1 & 2 DETAILS

NORTH CAROLINA PROFESSIONAL SEAL 24939 ENGINEER BYRON E. ATKINSON 12/02/14

ASSEMBLED BY: B.E. LANNING	DATE: 10/14
CHECKED BY : B.E. ATKINSON	DATE: 11/14
DESIGN ENGINEER OF RECORD: B.E. ATKINSON	DATE: 11/14
DRAWN BY : WJH 12/11	REV. 8/14 MAA/TMG
CHECKED BY : AAC 12/11	

MI ENGINEERING
1011 SCHAUB DRIVE, SUITE 100
RALEIGH, NC 27606
(919) 851-6606
FIRM PE NUMBER : P-0671

REVISIONS								SHEET NO.
NO.	BY:	DATE:	NO.	BY:	DATE:			S-13
1			3					TOTAL SHEETS
2			4					15

STD. NO. EB_30_90S4_33BB

12/2/2014
12:10:04 PM
User: blanning
Filename: P:\NC Bridges\MI3012 - Div 08 Bridge Replacements_Summit\MI3012.03_Randolph 232\17BP8R77\Structures\17BP8R77_SD_EB4.dgn

NOTES :

FOR BERM WIDTH DIMENSIONS, SEE GENERAL DRAWING.

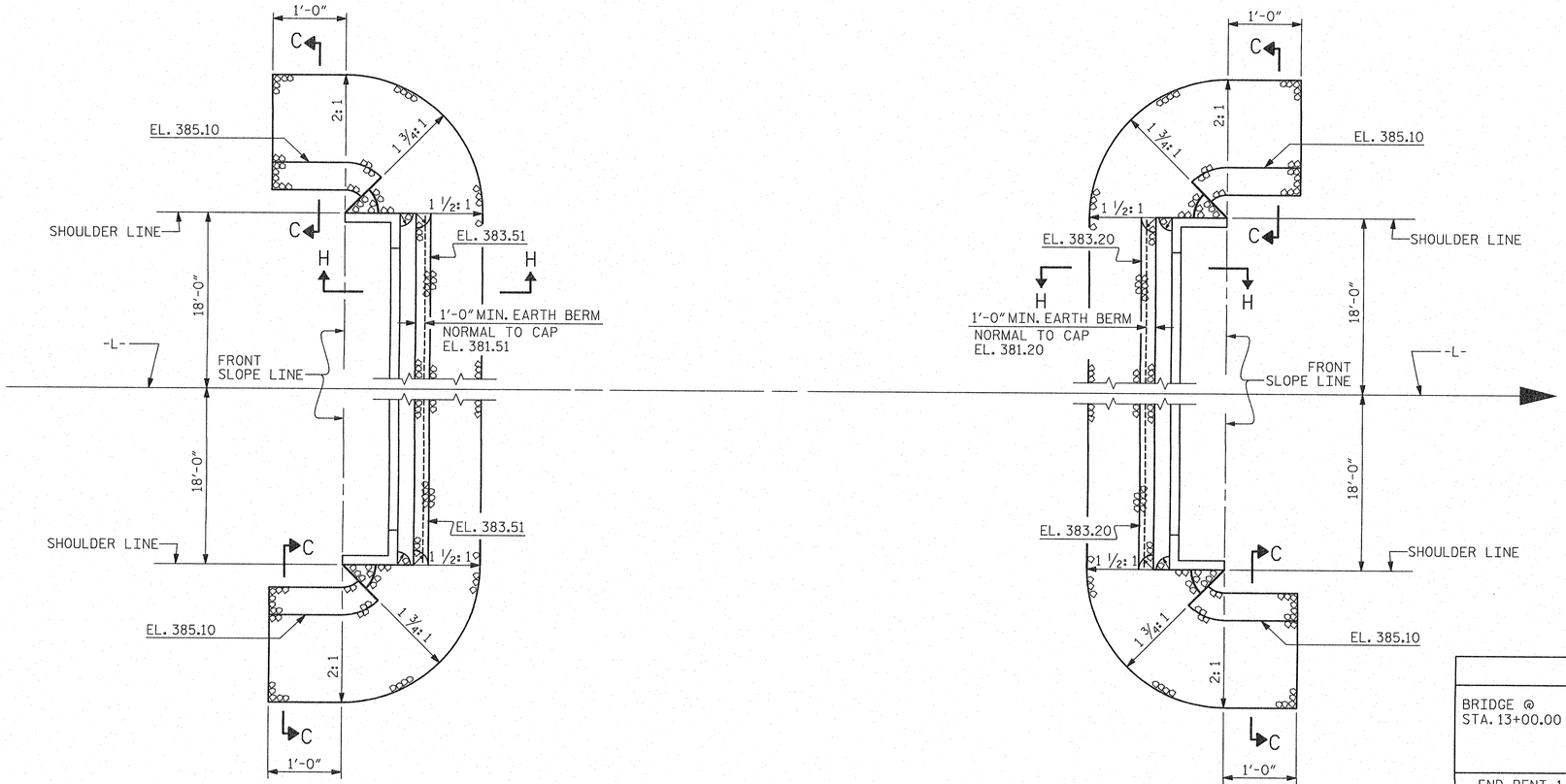

@ END BENT 1

PLAN

@ END BENT 2

ESTIMATED QUANTITIES		
BRIDGE @ STA. 13+00.00 -L-	RIP RAP CLASS II (2'-0" THICK)	GEOTEXTILE FOR DRAINAGE
	TONS	SQUARE YARDS
END BENT 1	112	124
END BENT 2	85	95

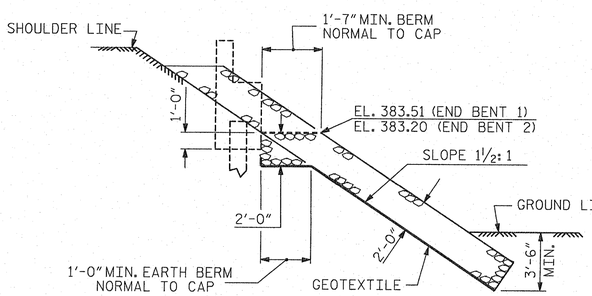

SECTION H-H

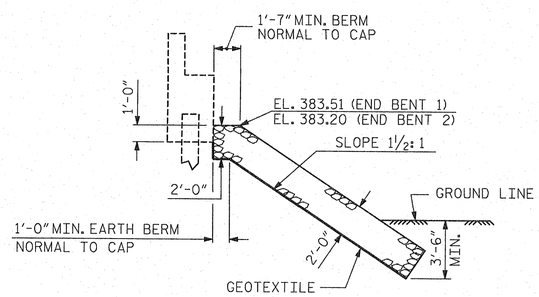

℄ SECTION

BERM RIP RAPPED

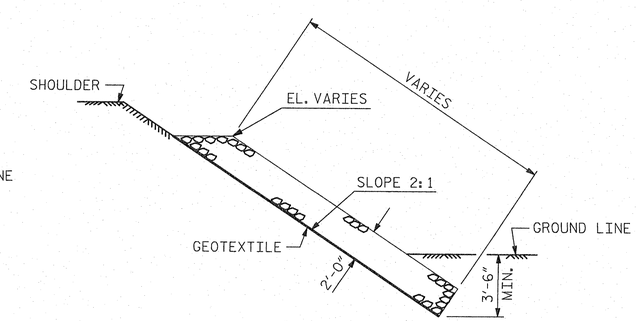

SECTION C-C

PROJECT NO. 17BP.8.R.77

RANDOLPH COUNTY

STATION: 13+00.00 -L-

STATE OF NORTH CAROLINA
DEPARTMENT OF TRANSPORTATION
RALEIGH

STANDARD

RIP RAP DETAILS

NORTH CAROLINA PROFESSIONAL SEAL 24939 ENGINEER BYRON E. ATKINSON 12/2/14

MI ENGINEERING
1011 SCHAUB DRIVE, SUITE 100
RALEIGH, NC 27606
(919) 851-6606
FIRM PE NUMBER : P-0671

REVISIONS						
NO.	BY:	DATE:	NO.	BY:	DATE:	
1			3			
2			4			

SHEET NO. S-14

TOTAL SHEETS 15

ASSEMBLED BY:	B.E. LANNING	DATE:	10/14
CHECKED BY :	B.E. ATKINSON	DATE:	10/14
DESIGN ENGINEER OF RECORD:	B.E. ATKINSON	DATE:	10/14
DRAWN BY : REK 1/84	REV. 5/1/06R	TLA/GM	
CHECKED BY : RDU 1/84	REV. 10/1/11	MAA/GM	
	REV. 12/21/11	MAA/GM	

STD. NO. RR1 (Sht 2)

12/2/2014
12:10:06 PM
User: bianning
Filename: P:\NC Bridges\WI3012 - Div 08 Bridge Replacements_Summit\WI3012.03_Randolph 232\17BP8R77\Structures\17BP8R77_SD_RR1.dgn

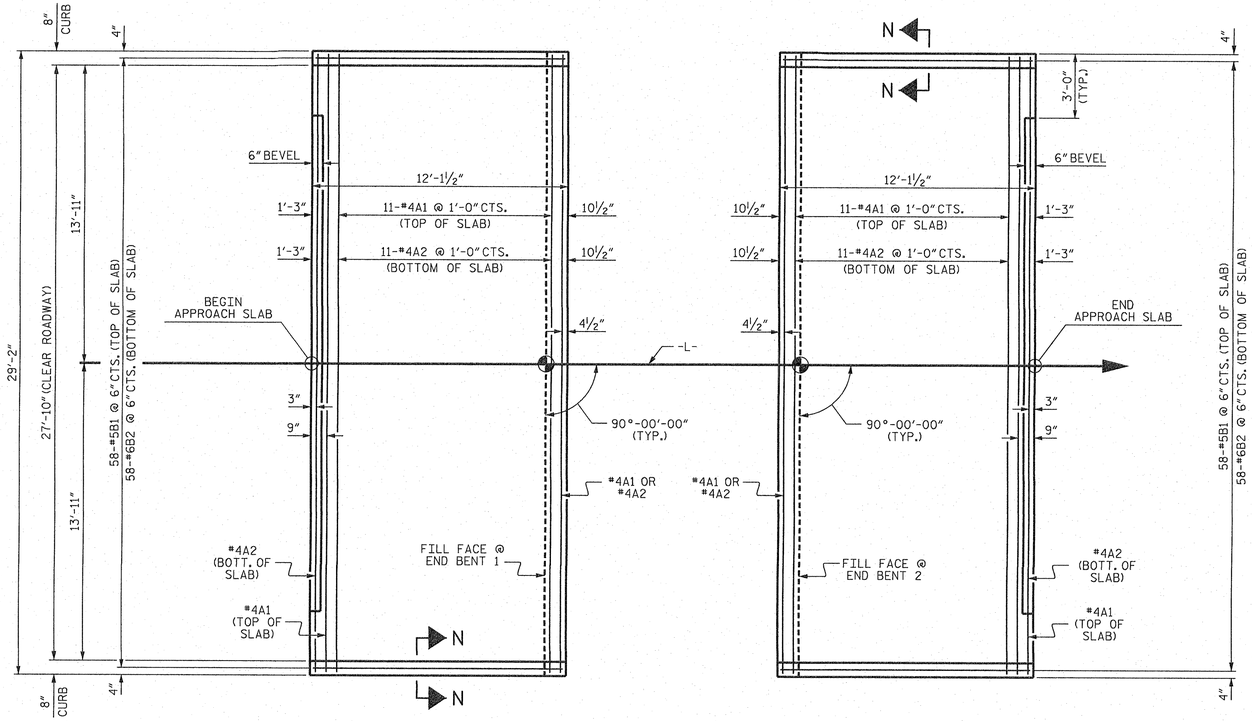

PLAN @ END BENT 1

PLAN @ END BENT 2

DIMENSIONS SHOWN ARE TYPICAL FOR BOTH APPROACH SLABS

NOTES

FOR BRIDGE APPROACH FILL INCLUDING GEOTEXTILE, 4" Ø DRAINAGE PIPE, AND #78M STONE BACKFILL, SEE ROADWAY PLANS.

GEOTEXTILE SHALL BE TYPE 1 IN ACCORDANCE WITH THE STANDARD SPECIFICATIONS SECTION 1056.

#78M STONE BACKFILL (CLASS V SELECT MATERIAL) SHALL BE IN ACCORDANCE WITH STANDARD SPECIFICATIONS SECTION 1016.

#78M STONE BACKFILL IS TO BE CONTINUOUS ALONG FILL FACE OF BACKWALL FROM OUTSIDE EDGE TO OUTSIDE EDGE OF APPROACH SLAB.

FOR THE 4" Ø DRAINAGE PIPE OUTLET(S), SEE ROADWAY STANDARD DRAWINGS.

AREA BETWEEN THE WINGWALL AND APPROACH SLAB SHALL BE GRADED TO DRAIN THE WATER AWAY FROM THE FILL FACE OF THE BRIDGE AND SHALL BE PAVED. SEE ROADWAY PLANS.

APPROACH SLAB GROOVING IS NOT REQUIRED.

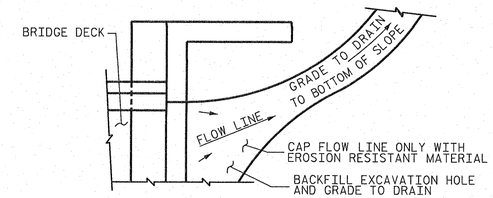

NOTE: IF THE APPROACH SLAB IS NOT CONSTRUCTED IMMEDIATELY AFTER THE BACKFILLING OF THE END BENT EXCAVATION, GRADE TO DRAIN TO THE BOTTOM OF THE SLOPE AND PROVIDE EROSION RESISTANT MATERIAL, SUCH AS FIBERGLASS ROVING OR AS DIRECTED BY THE ENGINEER TO PREVENT SOIL EROSION AND TO PROTECT THE AREA ADJACENT TO THE STRUCTURE. THE CONTRACTOR WILL BE REQUIRED TO REMOVE THESE MATERIALS PRIOR TO CONSTRUCTION OF THE APPROACH SLAB.

TEMPORARY DRAINAGE DETAIL

BILL OF MATERIAL

APPROACH SLAB AT EB 1

BAR	NO.	SIZE	TYPE	LENGTH	WEIGHT
* A1	13	#4	STR	28'-10"	250
A2	13	#4	STR	28'-10"	250
* B1	58	#5	STR	11'-2"	676
B2	58	#6	STR	11'-8"	1016
REINFORCING STEEL				LBS.	1266
* EPOXY COATED REINFORCING STEEL				LBS.	926
CLASS AA CONCRETE				C. Y.	15.6

APPROACH SLAB AT EB 2

BAR	NO.	SIZE	TYPE	LENGTH	WEIGHT
* A1	13	#4	STR	28'-10"	250
A2	13	#4	STR	28'-10"	250
* B1	58	#5	STR	11'-2"	676
B2	58	#6	STR	11'-8"	1016
REINFORCING STEEL				LBS.	1266
* EPOXY COATED REINFORCING STEEL				LBS.	926
CLASS AA CONCRETE				C. Y.	15.6

SPLICE LENGTHS

BAR SIZE	EPOXY COATED	UNCOATED
#4	2'-0"	1'-9"
#5	2'-6"	2'-2"
#6	3'-10"	2'-7"

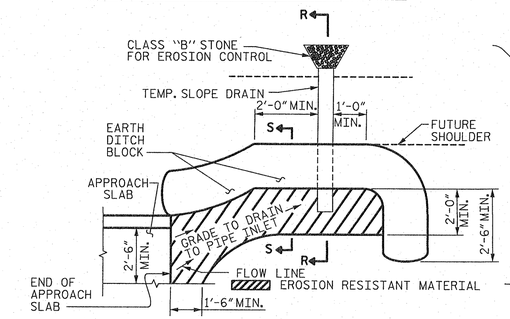

NOTE: IMMEDIATELY AFTER THE CONSTRUCTION OF THE APPROACH SLAB, THE CONTRACTOR SHALL PROVIDE TEMPORARY BERM AND SLOPE DRAIN. CONTRACTOR SHALL GRADE TO PIPE INLET AND PROVIDE EROSION RESISTANT MATERIAL AS SHOWN. THE EROSION RESISTANT MATERIAL SHALL BE EITHER 1) ASPHALT PLANT MIX, TYPE 1 OR TYPE 2, MIN. 2" DEPTH, 2) EROSION CONTROL MAT, OR 3) CONCRETE, AS DIRECTED BY THE ENGINEER. THE SLOPE DRAIN SHALL CONSIST OF A NON-PERFORATED TEMPORARY DRAINAGE PIPE, 12 INCHES IN DIAMETER.

PLAN VIEW

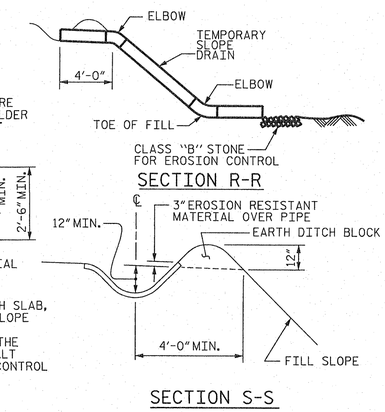

TEMPORARY BERM AND SLOPE DRAIN DETAILS

(TO BE USED WHEN SHOULDER BERM GUTTER IS REQUIRED)

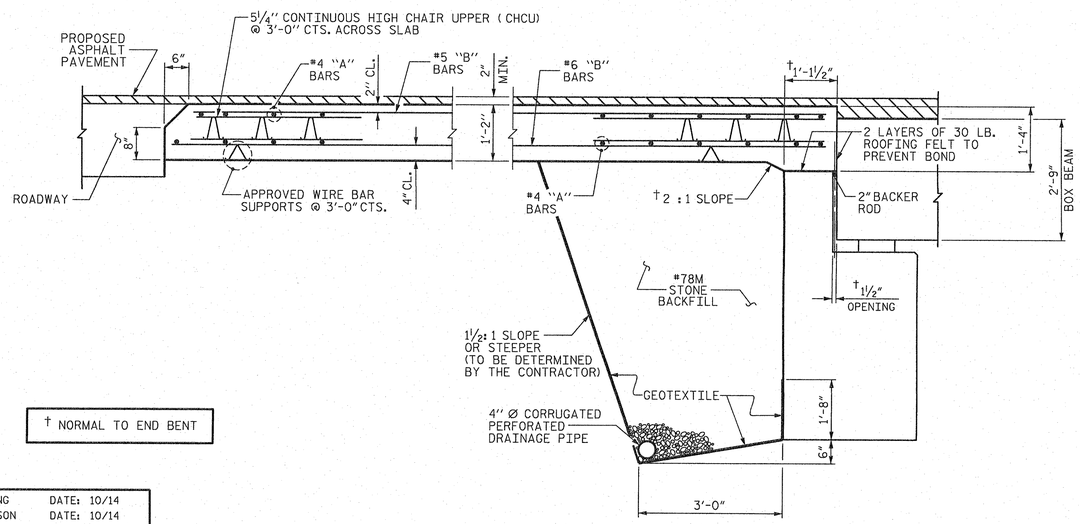

† NORMAL TO END BENT

SECTION THRU SLAB

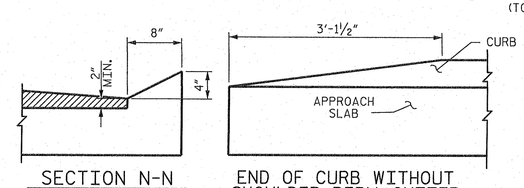

SECTION N-N

END OF CURB WITHOUT SHOULDER BERM GUTTER

CURB DETAILS

PROJECT NO. 17BP.8.R.77

RANDOLPH COUNTY

STATION: 13+00.00 -L-

STATE OF NORTH CAROLINA
DEPARTMENT OF TRANSPORTATION
RALEIGH

STANDARD
BRIDGE APPROACH SLAB
FOR PRESTRESSED CONCRETE
BOX BEAM UNIT
(SUB-REGIONAL TIER)
90° SKEW

NORTH CAROLINA PROFESSIONAL SEAL 24939 ENGINEER BYRON E. ATKINSON 12/02/14

ASSEMBLED BY:	B.E. LANNING	DATE:	10/14
CHECKED BY :	B.E. ATKINSON	DATE:	10/14
DESIGN ENGINEER OF RECORD:	B.E. ATKINSON	DATE:	10/14
DRAWN BY : MAA	11/11		
CHECKED BY : AAC	11/11		

MI ENGINEERING
1011 SCHAUB DRIVE, SUITE 100
RALEIGH, NC 27606
(919) 851-6606
FIRM PE NUMBER : P-0671

REVISIONS							
NO.	BY:	DATE:	NO.	BY:	DATE:	SHEET NO.	S-15
1			3			TOTAL SHEETS	15
2			4				

STD. NO. BAS_BB_30_90S

12/2/2014
12:10:08 PM
User: blanning
Filename: F:\NC Bridges\MI3012 - Div 08 Bridge Replacements_Summit\MI3012.03_Randolph 232\17BP8R77\Structures\17BP8R77_SD_BAS1.dgn

STANDARD NOTES

DESIGN DATA:

SPECIFICATIONS	A.A.S.H.T.O. (CURRENT)
LIVE LOAD	SEE PLANS
IMPACT ALLOWANCE	SEE A.A.S.H.T.O.
STRESS IN EXTREME FIBER OF	
STRUCTURAL STEEL - AASHTO M270 GRADE 36	20,000 LBS. PER SQ. IN.
- AASHTO M270 GRADE 50W	27,000 LBS. PER SQ. IN.
- AASHTO M270 GRADE 50	27,000 LBS. PER SQ. IN.
REINFORCING STEEL IN TENSION	
GRADE 60	24,000 LBS. PER SQ. IN.
CONCRETE IN COMPRESSION	1,200 LBS. PER SQ. IN.
CONCRETE IN SHEAR	SEE A.A.S.H.T.O.
STRUCTURAL TIMBER - TREATED OR	
UNTREATED - EXTREME FIBER STRESS	1,800 LBS. PER SQ. IN.
COMPRESSION PERPENDICULAR TO GRAIN OF TIMBER	375 LBS. PER SQ. IN.
EQUIVALENT FLUID PRESSURE OF EARTH	30 LBS. PER CU. FT. (MINIMUM)

MATERIAL AND WORKMANSHIP:

EXCEPT AS MAY OTHERWISE BE SPECIFIED ON PLANS OR IN THE SPECIAL PROVISIONS, ALL MATERIAL AND WORKMANSHIP SHALL BE IN ACCORDANCE WITH THE 2012 "STANDARD SPECIFICATIONS FOR ROADS AND STRUCTURES" OF THE N. C. DEPARTMENT OF TRANSPORTATION.

STEEL SHEET PILING FOR PERMANENT OR TEMPORARY APPLICATIONS SHALL BE HOT ROLLED.

CONCRETE:

UNLESS OTHERWISE REQUIRED ON PLANS, CLASS A CONCRETE SHALL BE USED FOR ALL PORTIONS OF ALL STRUCTURES WITH THE EXCEPTION THAT: CLASS AA CONCRETE SHALL BE USED IN BRIDGE SUPERSTRUCTURES, ABUTMENT BACKWALLS, AND APPROACH SLABS; AND CLASS B CONCRETE SHALL BE USED FOR SLOPE PROTECTION AND RIP RAP.

CONCRETE CHAMFERS:

UNLESS OTHERWISE NOTED ON THE PLANS, ALL EXPOSED CORNERS ON STRUCTURES SHALL BE CHAMFERED 3/4" WITH THE FOLLOWING EXCEPTIONS: TOP CORNERS OF CURBS MAY BE ROUNDED TO 1-1/2" RADIUS WHICH IS BUILT INTO CURB FORMS; CORNERS OF TRANSVERSE FLOOR EXPANSION JOINTS SHALL BE ROUNDED WITH A 1/4" FINISHING TOOL UNLESS OTHERWISE REQUIRED ON PLANS; AND CORNERS OF EXPANSION JOINTS IN THE ROADWAY FACES AND TOPS OF CURBS AND SIDEWALKS SHALL BE ROUNDED TO A 1/4" RADIUS WITH A FINISHING STONE OR TOOL UNLESS OTHERWISE REQUIRED ON PLANS.

DOWELS:

DOWELS WHEN INDICATED ON PLANS AS FOR CULVERT EXTENSIONS, SHALL BE EMBEDDED AT LEAST 12" INTO THE OLD CONCRETE AND GROUTED INTO PLACE WITH 1:2 CEMENT MORTAR.

ALLOWANCE FOR DEAD LOAD DEFLECTION, SETTLEMENT, ETC. IN CASTING SUPERSTRUCTURES:

BRIDGES SHALL BE BUILT ON THE GRADE OR VERTICAL CURVE SHOWN ON PLANS. SLABS, CURBS AND PARAPETS SHALL CONFORM TO THE GRADE OR CURVE.

ALL DIMENSIONS WHICH ARE GIVEN IN SECTION AND ARE AFFECTED BY DEAD LOAD DEFLECTIONS ARE DIMENSIONS AT CENTER LINE OF BEARING UNLESS OTHERWISE NOTED ON PLANS. IN SETTING FORMS FOR STEEL BEAM BRIDGES AND PRESTRESSED CONCRETE GIRDER BRIDGES, ADJUSTMENTS SHALL BE MADE DUE TO THE DEAD LOAD DEFLECTIONS FOR THE ELEVATIONS SHOWN. WHERE BLOCKS ARE SHOWN OVER BEAMS FOR BUILDING UP TO THE SLAB, THE VERTICAL DIMENSIONS OF THE BLOCKS SHALL BE ADJUSTED BETWEEN BEARINGS TO COMPENSATE FOR DEAD LOAD DEFLECTIONS, VERTICAL CURVE ORDINATE, AND ACTUAL BEAM CAMBER. WHERE BOTTOM OF SLAB IS IN LINE WITH BOTTOM OF TOP FLANGES, DEPTH OF SLAB BETWEEN BEARINGS SHALL BE ADJUSTED TO COMPENSATE FOR DEAD LOAD DEFLECTION, VERTICAL CURVE ORDINATE, AND ACTUAL BEAM CAMBER.

IN SETTING FALSEWORK AND FORMS FOR REINFORCED CONCRETE SPANS, AN ALLOWANCE SHALL BE MADE FOR DEAD LOAD DEFLECTIONS, SETTLEMENT OF FALSEWORK, AND PERMANENT CAMBER WHICH SHALL BE PROVIDED FOR IN ADDITION TO THE ELEVATIONS SHOWN. AFTER REMOVAL OF THE FALSEWORK, THE FINISHED STRUCTURES SHALL CONFORM TO THE PROFILE AND ELEVATIONS SHOWN ON THE PLANS AND CONSTRUCTION ELEVATIONS FURNISHED BY THE ENGINEER.

DETAILED DRAWINGS FOR FALSEWORK OR FORMS FOR BRIDGE SUPERSTRUCTURE AND ANY STRUCTURE OR PARTS OF A STRUCTURE AS NOTED ON THE PLANS SHALL BE SUBMITTED TO THE ENGINEER FOR APPROVAL BEFORE CONSTRUCTION OF THE FALSEWORK OR FORMS IS STARTED.

REINFORCING STEEL:

ALL REINFORCING STEEL SHALL BE DEFORMED. DIMENSIONS RELATIVE TO PLACEMENT OF REINFORCING ARE TO CENTERS OF BARS UNLESS OTHERWISE INDICATED IN THE PLANS. DIMENSIONS ON BAR DETAILS ARE TO CENTERS OF BARS OR ARE OUT TO OUT AS INDICATED ON PLANS.

WIRE BAR SUPPORTS SHALL BE PROVIDED FOR REINFORCING STEEL WHERE INDICATED ON THE PLANS. WHEN BAR SUPPORT PIECES ARE PLACED IN CONTINUOUS LINES, THEY SHALL BE SO PLACED THAT THE ENDS OF THE SUPPORTING WIRES SHALL BE LAPPED TO LOCK LEGS ON ADJOINING PIECES.

STRUCTURAL STEEL:

AT THE CONTRACTOR'S OPTION, HE MAY SUBSTITUTE 7/8" Ø SHEAR STUDS FOR THE 3/4" Ø STUDS SPECIFIED ON THE PLANS. THIS SUBSTITUTION SHALL BE MADE AT THE RATE OF 3 - 7/8" Ø STUDS FOR 4 - 3/4" Ø STUDS, AND STUD SPACING CHANGES SHALL BE MADE AS NECESSARY TO PROVIDE THE SAME EQUIVALENT NUMBER OF 7/8" Ø STUDS ALONG THE BEAM AS SHOWN FOR 3/4" Ø STUDS BASED ON THE RATIO OF 3 - 7/8" Ø STUDS FOR 4 - 3/4" Ø STUDS. STUDS OF THE LENGTH SPECIFIED ON THE PLANS MUST BE PROVIDED. THE MAXIMUM SPACING SHALL BE 2'-0".

EXCEPT AT THE INTERIOR SUPPORTS OF CONTINUOUS BEAMS WHERE THE COVER PLATE IS IN CONTACT WITH BEARING PLATE, THE CONTRACTOR MAY, AT HIS OPTION, SUBSTITUTE FOR THE COVER PLATES DESIGNATED ON THE PLANS COVER PLATES OF THE EQUIVALENT AREA PROVIDED THESE PLATES ARE AT LEAST 5/16" IN THICKNESS AND DO NOT EXCEED A WIDTH EQUAL TO THE FLANGE WIDTH LESS 2" OR A THICKNESS EQUAL TO 2 TIMES THE FLANGE THICKNESS. THE SIZE OF FILLET WELDS SHALL CONFORM TO THE REQUIREMENTS OF THE CURRENT ANSI/AASHTO/AWS "BRIDGE WELDING CODE". ELECTROSLAG WELDING WILL NOT BE PERMITTED.

WITH THE SOLE EXCEPTION OF EDGES AT SURFACES WHICH BEAR ON OTHER SURFACES, ALL SHARP EDGES AND ENDS OF SHAPES AND PLATES SHALL BE SLIGHTLY ROUNDED BY SUITABLE MEANS TO A RADIUS OF APPROXIMATELY 1/16 INCH OR EQUIVALENT FLAT SURFACE AT A SUITABLE ANGLE PRIOR TO PAINTING, GALVANIZING, OR METALLIZING.

HANDRAILS AND POSTS:

METAL STANDARDS AND FACES OF THE CONCRETE END POSTS FOR THE METAL RAIL SHALL BE SET NORMAL TO THE GRADE OF THE CURB, UNLESS OTHERWISE SHOWN ON PLANS. THE METAL RAIL AND TOPS OF CONCRETE POSTS USED WITH THE ALUMINUM RAIL SHALL BE BUILT PARALLEL TO THE GRADE OF THE CURB.

METAL HANDRAILS SHALL BE IN ACCORDANCE WITH THE PLANS. RAILS SHALL BE AS MANUFACTURED FOR BRIDGE RAILING. CASTINGS SHALL BE OF A UNIFORM APPEARANCE. FINS AND OTHER DEFORMATIONS RESULTING FROM CASTING OR OTHERWISE SHALL BE REMOVED IN A MANNER SO THAT A UNIFORM COLORING OF THE COMPLETED CASTING SHALL BE OBTAINED. CASTINGS WITH DISCOLORATIONS OR OF NON-UNIFORM COLORING WILL NOT BE ACCEPTED. CERTIFIED MILL REPORTS ARE REQUIRED FOR METAL RAILS AND POSTS.

SPECIAL NOTES:

GENERALLY, IN CASE OF DISCREPANCY, THIS STANDARD SHEET OF NOTES SHALL GOVERN OVER THE SPECIFICATIONS, BUT THE REMAINDER OF THE PLANS SHALL GOVERN OVER NOTES HEREON, AND SPECIAL PROVISIONS SHALL GOVERN OVER ALL. SEE SPECIFICATIONS ARTICLE 105-4.

ENGLISH

JANUARY, 1990