DocuSign Envelope ID: F10926BF-9326-425B-B06F-3DEC7C704110

09/08/99

PROJECT: 17BP.8.R.133

See Sheet 1A For Index of Sheets

STATE OF NORTH CAROLINA
DIVISION OF HIGHWAYS

MONTGOMERY COUNTY

STATE	STATE PROJECT REFERENCE NO.	SHEET NO.	TOTAL SHEETS
N.C.	17BP.8.R.133	1	

STATE PROJ. NO.	F. A. PROJ. NO.	DESCRIPTION
17BP.8.R.133		P.E.

LOCATION: BRIDGE 123 OVER WEST FORK LITTLE RIVER ON SR 1340 (OKEEWEMEE ROAD)

TYPE OF WORK: GRADING, DRAINAGE, PAVING & STRUCTURE

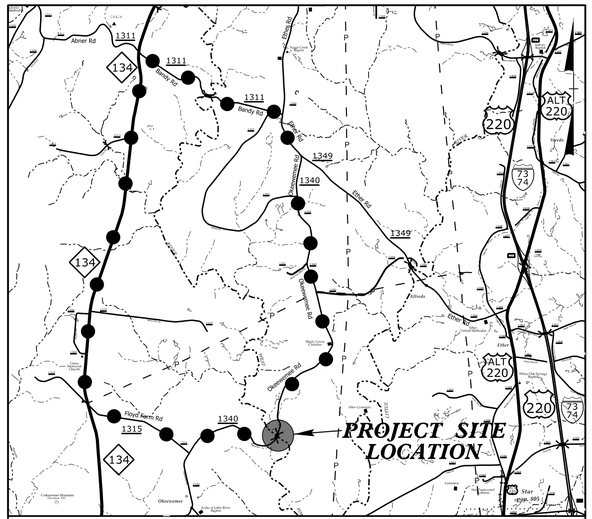

VICINITY MAP

OFF-SITE DETOUR ROUTE

N.T.S.

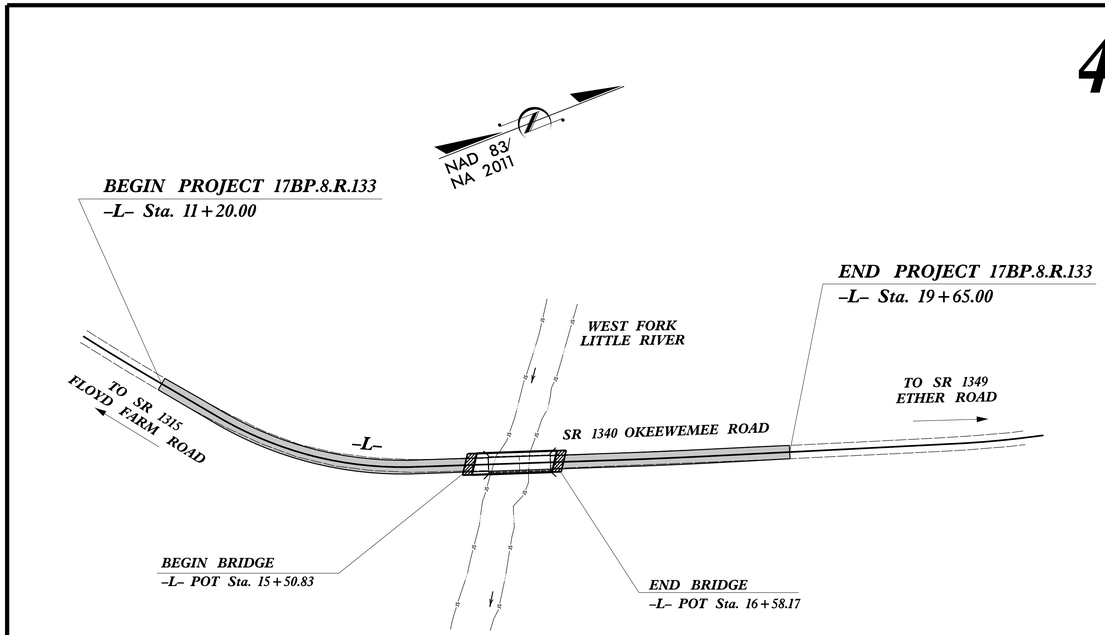

DOCUMENT NOT CONSIDERED FINAL UNLESS ALL SIGNATURES COMPLETED

CONTRACT:

11/21/2019
R:\Roadway\Proj\Mont\23_Rdy_tsh.dgn
USERNAME

GRAPHIC SCALES

50 25 0 50 100
PLANS

50 25 0 50 100
PROFILE (HORIZONTAL)

10 5 0 10 20
PROFILE (VERTICAL)

DESIGN DATA

ADT 2015 = 220
ADT 2025 = 440
K = %
D = %
T = 6 % *
V = 40 MPH
* TTST = DUAL
FUNC CLASS =
LOCAL
SUBREGIONAL TIER

PROJECT LENGTH

LENGTH ROADWAY PROJECT 17BP.8.R.133	=	0.140 mi
LENGTH STRUCTURE PROJECT 17BP.8.R.133	=	0.020 mi
TOTAL LENGTH OF PROJECT 17BP.8.R.133	=	0.160 mi

PLANS PREPARED BY:

CH ENGINEERING
3220 GLEN ROYAL RD, RALEIGH, NC 27617
TELE 919.788.0224 FAX 919.788.0232
NC LICENSE #P-0189

2018 STANDARD SPECIFICATIONS

RIGHT OF WAY DATE:
MARCH 20, 2019

LETTING DATE:

PLANS PREPARED FOR:

DIVISION OF HIGHWAYS
DIVISION 8
121 DOT Drive
Carthage, NC 28327

BRIAN A. WILES, PE
PROJECT ENGINEER

TIM WELCH, PE
NCDOT CONTACT
DIV 8 BRIDGE PROGRAM MANAGER

HYDRAULICS ENGINEER

MI ENGINEERING
1011 SCHAUB DRIVE, SUITE 100
RALEIGH, NC 27606
(919) 851-6600
FIRM PE NUMBER : P-0671

3/26/2020

NORTH CAROLINA PROFESSIONAL SEAL 040302 ENGINEER WILLIAM KEITH JERNIGAN, JR.

DocuSigned by:
Bill Jernigan
E1A4F7B17B7A4D0...
SIGNATURE: P.E.

ROADWAY DESIGN ENGINEER

3/26/2020

NORTH CAROLINA PROFESSIONAL SEAL 16689 ENGINEER BRIAN ALLEN WILES

DocuSigned by:
Brian A Wiles
SIGNATURE:

STATE OF NORTH CAROLINA DEPARTMENT OF TRANSPORTATION

DocuSign Envelope ID: 17A53060-43D1-405D-88A2-E9E165814DFF

8/17/99

PROJECT REFERENCE NO.	SHEET NO.
17BP.8.R.133	1A

CH ENGINEERING
3220 GLEN ROYAL RD. RALEIGH, NC 27617
TELE 919.788.0224 FAX 919.788.0232
NC LICENSE #P-0189

ROADWAY DESIGN ENGINEER
3/26/2020
NORTH CAROLINA PROFESSIONAL SEAL 16689 ENGINEER BRIAN ALLEN WILES
DocuSigned by: Brian A Wiles
889000FEA2E34DE...

DOCUMENT NOT CONSIDERED FINAL UNLESS ALL SIGNATURES COMPLETED

INDEX OF SHEETS

SHEET NUMBER	SHEET
1	TITLE SHEET
1A	INDEX OF SHEETS, GENERAL NOTES AND STANDARD DRAWINGS
1B	CONVENTIONAL SYMBOLS
2A-1	PAVEMENT SCHEDULE, TYPICAL SECTIONS No. 1 THRU 3, PAVED SHOULDER, INCIDENTAL MILLING AND WEDGING DETAILS
2C-1	GUARDRAIL INSTALLATION - SHEET 6 OF 8
2C-2	DETAIL OF STRUCTURE ANCHOR UNIT, TYPE III
3B-1	SUMMARIES OF EARTHWORK, GUARDRAIL, ASPHALT PAVEMENT REMOVAL AND SHOULDER BERM GUTTER
3D-1	LIST OF PIPES, ENDWALLS, ETC. (for PIPES 48" & UNDER)
3G-1	SUMMARIES OF SUBSURFACE DRAINAGE AND AGGREGATE SUBGRADE/STABILIZATION
4	PLAN SHEET
5	PROFILE SHEET
RW-01 THRU RW-04	RIGHT OF WAY SHEETS
TMP-1 THRU TMP-4	TRAFFIC MANAGEMENT PLANS
EC-1 THRU EC-5	EROSION CONTROL PLANS
UC-1 THRU UC-5	UTILITY CONSTRUCTION PLANS
UO-1 THRU UO-2	UTILITIES BY OTHERS PLANS
X-1 THRU X-16	CROSS-SECTIONS
S-1 THRU S-15	STRUCTURE PLANS

GENERAL NOTES:

2018 SPECIFICATIONS
EFFECTIVE: 01-16-2018
REVISED:

GRADE LINE:
GRADING AND SURFACING:

THE GRADE LINES SHOWN DENOTE THE FINISHED ELEVATION OF THE PROPOSED SURFACING AT GRADE POINTS SHOWN ON THE TYPICAL SECTIONS. GRADE LINES MAY BE ADJUSTED AT THEIR BEGINNING AND ENDING AND AT STRUCTURES AS DIRECTED BY THE ENGINEER IN ORDER TO SECURE A PROPER TIE-IN.

CLEARING:

CLEARING ON THIS PROJECT SHALL BE PERFORMED TO THE LIMITS ESTABLISHED BY METHOD III.

SUPERELEVATION:

ALL CURVES ON THIS PROJECT SHALL BE SUPERELEVATED IN ACCORDANCE WITH STD. NO. 225.04 USING THE RATE OF SUPERELEVATION AND RUNOFF SHOWN ON THE PLANS. SUPERELEVATION IS TO BE REVOLVED ABOUT THE GRADE POINTS SHOWN ON THE TYPICAL SECTIONS.

SHOULDER CONSTRUCTION:

ASPHALT, EARTH, AND CONCRETE SHOULDER CONSTRUCTION ON THE HIGH SIDE OF SUPERELEVATED CURVES SHALL BE IN ACCORDANCE WITH STD. NO. 560.01

SIDE ROADS:

THE CONTRACTOR WILL BE REQUIRED TO DO ALL NECESSARY WORK TO PROVIDE SUITABLE CONNECTIONS WITH ALL ROADS, STREETS, AND DRIVES ENTERING THIS PROJECT. THIS WORK WILL BE PAID FOR AT THE CONTRACT UNIT PRICE FOR THE PARTICULAR ITEMS INVOLVED.

GUARDRAIL:

THE GUARDRAIL LOCATIONS SHOWN ON THE PLANS MAY BE ADJUSTED DURING CONSTRUCTION AS DIRECTED BY THE ENGINEER. THE CONTRACTOR SHOULD CONSULT WITH THE ENGINEER PRIOR TO ORDERING GUARDRAIL MATERIAL.

TEMPORARY SHORING:

SHORING REQUIRED FOR THE MAINTENANCE OF TRAFFIC WILL BE PAID FOR AS "EXTRA WORK" IN ACCORDANCE WITH SECTION 104-7.

END BENTS:

THE ENGINEER SHALL CHECK THE STRUCTURE END BENT PLANS, DETAILS, AND CROSS-SECTION PRIOR TO SETTING OF THE SLOPE STAKES FOR THE EMBANKMENT OR EXCAVATION APPROACHING A BRIDGE.

UTILITIES:

UTILITY OWNERS ON THIS PROJECT ARE Randolph EMC - Power, CenturyLink - Communications and Montgomery County - Water.

ANY RELOCATION OF EXISTING UTILITIES WILL BE ACCOMPLISHED BY OTHERS, EXCEPT AS SHOWN ON THE PLANS.

RIGHT-OF-WAY MARKERS:

ALL RIGHT-OF-WAY MARKERS ON THIS PROJECT SHALL BE PLACED BY CONTRACT.

EFF. 01-16-2018
REV.

2018 ROADWAY ENGLISH STANDARD DRAWINGS

The following Roadway Standards as appear in "Roadway Standard Drawings" Highway Design Branch - N. C. Department of Transportation - Raleigh, N. C., Dated January, 2018 are applicable to this project and by reference hereby are considered a part of these plans:

STD.NO.	TITLE
DIVISION 2 - EARTHWORK	
200.03	Method of Clearing - Method III
225.02	Guide for Grading Subgrade - Secondary and Local
225.04	Method of Obtaining Superelevation - Two Lane Pavement
DIVISION 3 - PIPE CULVERTS	
300.01	Method of Pipe Installation
DIVISION 4 - MAJOR STRUCTURES	
422.02	Bridge Approach Fills - Type II Modified Approach Fill
DIVISION 5 - SUBGRADE, BASES AND SHOULDERS	
560.01	Method of Shoulder Construction - High Side of Superelevated Curve - Method I
DIVISION 6 - ASPHALT BASES AND PAVEMENTS	
654.01	Pavement Repairs
DIVISION 8 - INCIDENTALS	
806.01	Concrete Right-of-Way Marker
806.02	Granite Right-of-Way Marker
840.00	Concrete Base Pad for Drainage Structures
840.25	Anchorage for Frames - Brick or Concrete or Precast
840.29	Frames and Narrow Slot Flat Grates
840.35	Traffic Bearing Grated Drop Inlet - for Cast Iron Double Frame and Grates
840.46	Traffic Bearing Precast Drainage Structure
840.66	Drainage Structure Steps
846.01	Concrete Curb, Gutter and Curb & Gutter
862.01	Guardrail Placement
862.02	Guardrail Installation
862.03	Structure Anchor Units
876.02	Guide for Rip Rap at Pipe Outlets
876.04	Drainage Ditches with Class 'B' Rip Rap

11/13/2019
R:\Roadway\Proj\Mont123_Rdy_tsh_01A.dgn
lilewiles

12/2/2016

PROJECT REFERENCE NO.	SHEET NO.
17BP.8.R.33	1B

STATE OF NORTH CAROLINA, DIVISION OF HIGHWAYS

CONVENTIONAL PLAN SHEET SYMBOLS

Note: Not to Scale

S.U.E. = *Subsurface Utility Engineering

BOUNDARIES AND PROPERTY:

- State Line
- County Line
- Township Line
- City Line
- Reservation Line
- Property Line
- Existing Iron Pin — EIP
- Computed Property Corner
- Property Monument — ECM
- Parcel/Sequence Number — 123
- Existing Fence Line
- Proposed Woven Wire Fence
- Proposed Chain Link Fence
- Proposed Barbed Wire Fence
- Existing Wetland Boundary — WLB
- Proposed Wetland Boundary — WLB
- Existing Endangered Animal Boundary — EAB
- Existing Endangered Plant Boundary — EPB
- Existing Historic Property Boundary — HPB
- Known Contamination Area: Soil — S
- Potential Contamination Area: Soil — S
- Known Contamination Area: Water — W
- Potential Contamination Area: Water — W
- Contaminated Site: Known or Potential

BUILDINGS AND OTHER CULTURE:

- Gas Pump Vent or U/G Tank Cap
- Sign — S
- Well — W
- Small Mine
- Foundation
- Area Outline
- Cemetery
- Building
- School
- Church
- Dam

HYDROLOGY:

- Stream or Body of Water
- Hydro, Pool or Reservoir
- Jurisdictional Stream — JS
- Buffer Zone 1 — BZ 1
- Buffer Zone 2 — BZ 2
- Flow Arrow
- Disappearing Stream
- Spring
- Wetland
- Proposed Lateral, Tail, Head Ditch — FLOW
- False Sump

RAILROADS:

- Standard Gauge — CSX TRANSPORTATION
- RR Signal Milepost — MILEPOST 35
- Switch — SWITCH
- RR Abandoned
- RR Dismantled

RIGHT OF WAY & PROJECT CONTROL:

- Secondary Horiz and Vert Control Point
- Primary Horiz Control Point
- Primary Horiz and Vert Control Point
- Exist Permanent Easment Pin and Cap
- New Permanent Easement Pin and Cap
- Vertical Benchmark
- Existing Right of Way Marker
- Existing Right of Way Line
- New Right of Way Line — RW
- New Right of Way Line with Pin and Cap — RW
- New Right of Way Line with Concrete or Granite R/W Marker — RW
- New Control of Access Line with Concrete C/A Marker — CA
- Existing Control of Access — CA
- New Control of Access — CA
- Existing Easement Line — E
- New Temporary Construction Easement — E
- New Temporary Drainage Easement — TDE
- New Permanent Drainage Easement — PDE
- New Permanent Drainage / Utility Easement — DUE
- New Permanent Utility Easement — PUE
- New Temporary Utility Easement — TUE
- New Aerial Utility Easement — AUE

ROADS AND RELATED FEATURES:

- Existing Edge of Pavement
- Existing Curb
- Proposed Slope Stakes Cut — C
- Proposed Slope Stakes Fill — F
- Proposed Curb Ramp — CR
- Existing Metal Guardrail
- Proposed Guardrail
- Existing Cable Guiderail
- Proposed Cable Guiderail
- Equality Symbol
- Pavement Removal

VEGETATION:

- Single Tree
- Single Shrub
- Hedge
- Woods Line
- Orchard
- Vineyard — Vineyard

EXISTING STRUCTURES:

MAJOR:

- Bridge, Tunnel or Box Culvert — CONC
- Bridge Wing Wall, Head Wall and End Wall — CONC WW

MINOR:

- Head and End Wall — CONC HW
- Pipe Culvert
- Footbridge
- Drainage Box: Catch Basin, DI or JB — CB
- Paved Ditch Gutter
- Storm Sewer Manhole — S
- Storm Sewer — S

UTILITIES:

POWER:

- Existing Power Pole
- Proposed Power Pole
- Existing Joint Use Pole
- Proposed Joint Use Pole
- Power Manhole — P
- Power Line Tower
- Power Transformer
- U/G Power Cable Hand Hole
- H-Frame Pole
- U/G Power Line LOS B (S.U.E.*) — P
- U/G Power Line LOS C (S.U.E.*) — P
- U/G Power Line LOS D (S.U.E.*) — P

TELEPHONE:

- Existing Telephone Pole
- Proposed Telephone Pole
- Telephone Manhole — T
- Telephone Pedestal — T
- Telephone Cell Tower
- U/G Telephone Cable Hand Hole
- U/G Telephone Cable LOS B (S.U.E.*) — T
- U/G Telephone Cable LOS C (S.U.E.*) — T
- U/G Telephone Cable LOS D (S.U.E.*) — T
- U/G Telephone Conduit LOS B (S.U.E.*) — TC
- U/G Telephone Conduit LOS C (S.U.E.*) — TC
- U/G Telephone Conduit LOS D (S.U.E.*) — TC
- U/G Fiber Optics Cable LOS B (S.U.E.*) — T FO
- U/G Fiber Optics Cable LOS C (S.U.E.*) — T FO
- U/G Fiber Optics Cable LOS D (S.U.E.*) — T FO

WATER:

- Water Manhole — W
- Water Meter
- Water Valve
- Water Hydrant
- U/G Water Line LOS B (S.U.E*) — W
- U/G Water Line LOS C (S.U.E*) — W
- U/G Water Line LOS D (S.U.E*) — W
- Above Ground Water Line — A/G Water

TV:

- TV Pedestal — C
- TV Tower
- U/G TV Cable Hand Hole — HH
- U/G TV Cable LOS B (S.U.E.*) — TV
- U/G TV Cable LOS C (S.U.E.*) — TV
- U/G TV Cable LOS D (S.U.E.*) — TV
- U/G Fiber Optic Cable LOS B (S.U.E.*) — TV FO
- U/G Fiber Optic Cable LOS C (S.U.E.*) — TV FO
- U/G Fiber Optic Cable LOS D (S.U.E.*) — TV FO

GAS:

- Gas Valve
- Gas Meter
- U/G Gas Line LOS B (S.U.E.*) — G
- U/G Gas Line LOS C (S.U.E.*) — G
- U/G Gas Line LOS D (S.U.E.*) — G
- Above Ground Gas Line — A/G Gas

SANITARY SEWER:

- Sanitary Sewer Manhole
- Sanitary Sewer Cleanout
- U/G Sanitary Sewer Line — SS
- Above Ground Sanitary Sewer — A/G Sanitary Sewer
- SS Forced Main Line LOS B (S.U.E.*) — FSS
- SS Forced Main Line LOS C (S.U.E.*) — FSS
- SS Forced Main Line LOS D (S.U.E.*) — FSS

MISCELLANEOUS:

- Utility Pole
- Utility Pole with Base
- Utility Located Object
- Utility Traffic Signal Box — S
- Utility Unknown U/G Line LOS B (S.U.E.*) — 2UTL
- U/G Tank; Water, Gas, Oil
- Underground Storage Tank, Approx. Loc. — UST
- A/G Tank; Water, Gas, Oil
- Geoenvironmental Boring
- U/G Test Hole LOS A (S.U.E.*)
- Abandoned According to Utility Records — AATUR
- End of Information — E.O.I.

DocuSign Envelope ID: 17A53060-43D1-405D-88A2-E9E165814DFF

6/2/99

PAVEMENT SCHEDULE

C1	PROP. APPROX. 1½" ASPHALT CONCRETE SURFACE COURSE, TYPE S9.5B, AT AN AVERAGE RATE OF 165 LBS. PER SQ. YD.
C2	PROP. APPROX. 3" ASPHALT CONCRETE SURFACE COURSE, TYPE S9.5B, AT AN AVERAGE RATE OF 165 LBS. PER SQ. YD. IN EACH OF TWO LAYERS.
C3	PROP. VAR. DEPTH ASPHALT CONCRETE SURFACE COURSE, TYPE S9.5B, AT AN AVERAGE RATE OF 110 LBS. PER SQ. YD. PER 1" DEPTH. TO BE PLACED IN LAYERS NOT TO EXCEED 2" IN DEPTH.
D1	PROP. APPROX. 4" ASPHALT CONCRETE INTERMEDIATE COURSE, TYPE I19.0C, AT AN AVERAGE RATE OF 456 LBS. PER SQ. YD.
D2	PROP. VAR. DEPTH ASPHALT CONCRETE INTERMEDIATE COURSE, TYPE I19.0C, AT AN AVERAGE RATE OF 114 LBS. PER SQ. YD. PER 1" DEPTH, TO BE PLACED IN LAYERS NOT LESS THAN 2½" IN DEPTH OR GREATER THAN 4" IN DEPTH.
E1	PROP. APPROX. 4" ASPHALT CONCRETE BASE COURSE, TYPE B25.0C, AT AN AVERAGE RATE OF 456 LBS. PER SQ. YD.
E2	PROP. VAR. DEPTH ASPHALT CONCRETE BASE COURSE, TYPE B25.0C, AT AN AVERAGE RATE OF 114 LBS. PER SQ. YD. PER 1" DEPTH. TO BE PLACED IN LAYERS NOT LESS THAN 3" IN DEPTH OR GREATER THAN 5½" IN DEPTH.
T	EARTH MATERIAL.
U	EXISTING PAVEMENT.
W	VARIABLE DEPTH ASPHALT PAVEMENT (SEE STANDARD WEDGING DETAIL THIS SHEET)

NOTE: PAVEMENT EDGE SLOPES ARE 1:1 UNLESS SHOWN OTHERWISE.

CH ENGINEERING
3220 GLEN ROYAL RD. RALEIGH, NC 27617
TELE 919.788.0224 FAX 919.788.0232
NC LICENSE #P-0189

PROJECT REFERENCE NO.	SHEET NO.
17BP.8.R.133	2A-1
ROADWAY DESIGN ENGINEER	PAVEMENT DESIGN ENGINEER

3/26/2020
NORTH CAROLINA PROFESSIONAL SEAL 16689 ENGINEER BRIAN ALLEN WILES
DocuSign Brian A Wiles
88B0D

DOCUMENT NOT CONSIDERED FINAL UNLESS ALL SIGNATURES COMPLETED

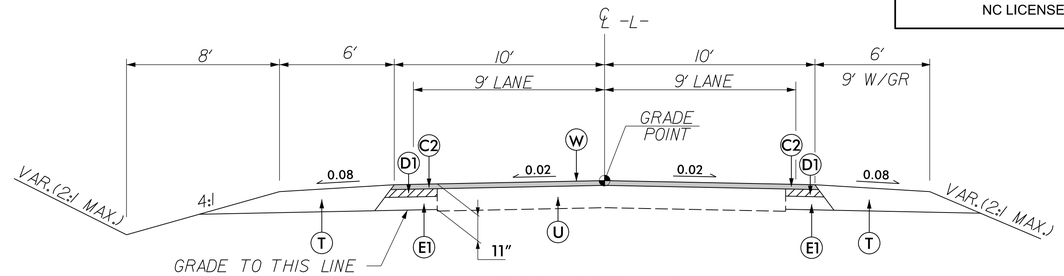

TYPICAL SECTION NO. 1
-L- STA 11+20.00 TO -L- STA 11+70.00
-L- STA 12+40.00 TO -L- STA 15+00.00
-L- STA 17+00.00 TO -L- STA 19+65.00

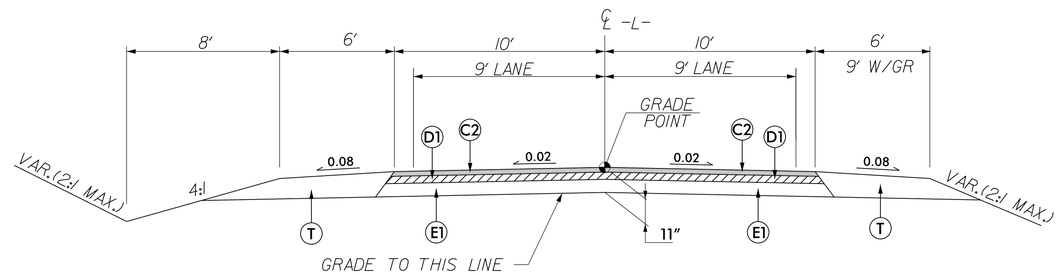

TYPICAL SECTION NO. 2
-L- STA 11+70.00 TO -L- STA 12+40.00
-L- STA 15+00.00 TO -L- STA 15+50.83 (BEGIN BRIDGE)
-L- STA 16+58.17 (END BRIDGE) TO -L- STA 17+00.00

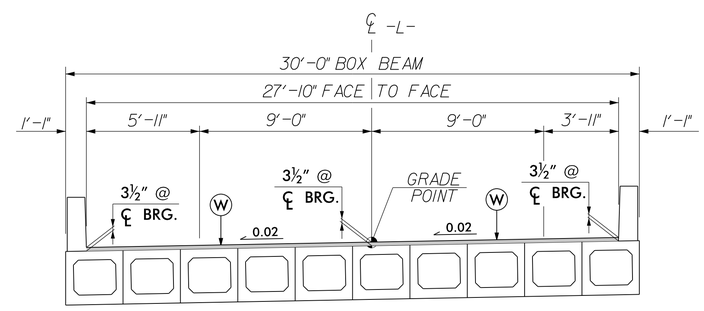

TYPICAL SECTION NO. 3
-L- STA 15+50.83 TO -L- STA 16+58.17

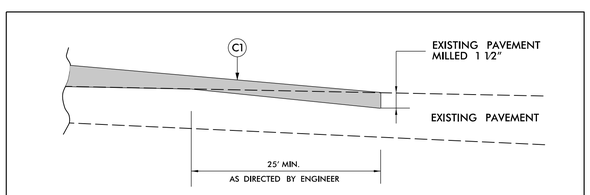

Incidental Milling Existing Pavement

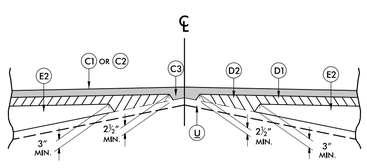

Detail Showing Method of Wedging

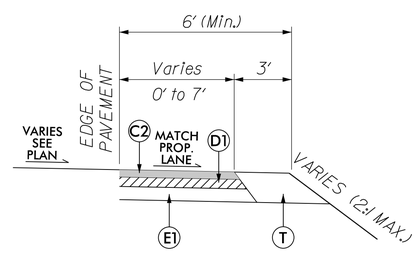

TYPICAL SECTION FOR PAVED SHOULDER

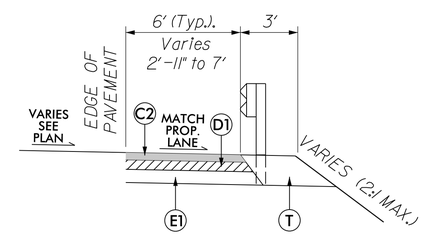

TYPICAL SECTION FOR PAVED SHOULDER w/ GUARDRAIL

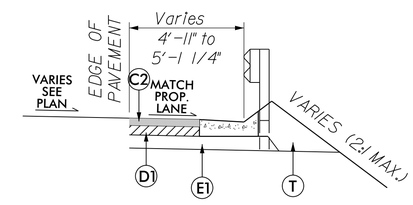

TYPICAL SECTION FOR SHOULDER BERM GUTTER

11/13/2019
R:\Roadway\Proj\Mont123_Rdy_typ.dgn
TERRYWOOD

DocuSign Envelope ID: 53930BDD-0F3D-43E8-90F2-E71863DBA13F

PROJECT REFERENCE NO.	SHEET NO.
17BP.8.R.133	2C-1

DOCUMENT NOT CONSIDERED FINAL UNLESS ALL SIGNATURES COMPLETED

STATE OF NORTH CAROLINA
DEPT. OF TRANSPORTATION
DIVISION OF HIGHWAYS
RALEIGH, N.C.

ROADWAY DETAIL DRAWING FOR
GUARDRAIL INSTALLATION

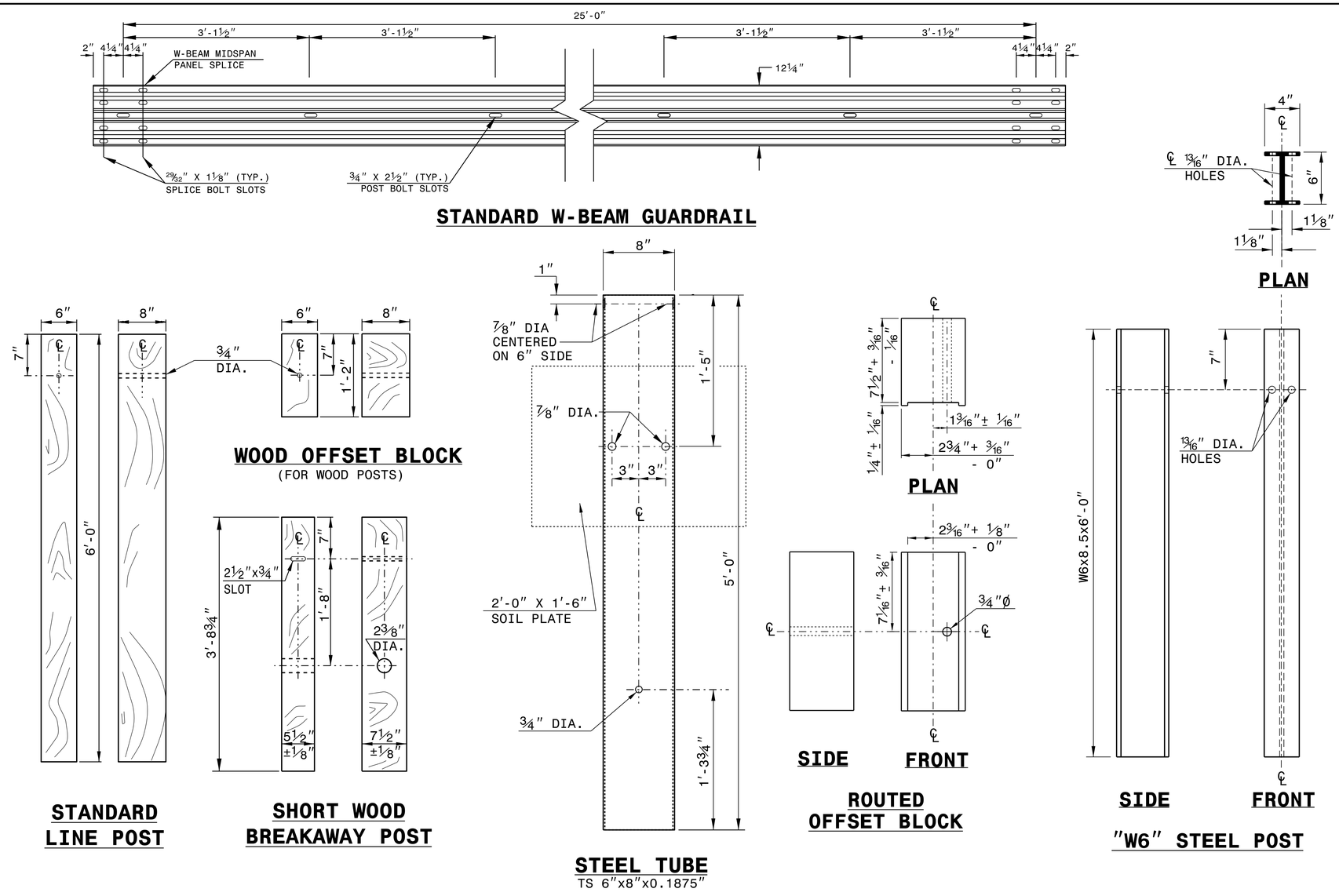

SYSTEM PARTS

SHEET 6 OF 8
862D02

STATE OF NORTH CAROLINA
DEPT. OF TRANSPORTATION
DIVISION OF HIGHWAYS
RALEIGH, N.C.

ROADWAY DETAIL DRAWING FOR
GUARDRAIL INSTALLATION

SHEET 6 OF 8
862D02

DocuSigned by:
873F3D17DCDC4E5...

NORTH CAROLINA PROFESSIONAL SEAL 022966 ENGINEER JOEL S. HOWERTON
3/26/2020

CONTRACTS STANDARDS AND DEVELOPMENT UNIT
Office 919-707-6950 FAX 919-250-4119

SEE TITLE BLOCK

ORIGINAL BY: J.HOWERTON DATE: 3-7-2018
MODIFIED BY: DATE:
CHECKED BY: DATE:
FILE SPEC.:

DocuSign Envelope ID: 53308BDD-0F30-43E8-80F2-E718630BA13F

STATE OF NORTH CAROLINA
DEPT. OF TRANSPORTATION
DIVISION OF HIGHWAYS
RALEIGH, N.C.

ROADWAY DETAIL DRAWING FOR
STRUCTURE ANCHOR UNITS
GUARDRAIL ANCHOR UNIT, TYPE III
FOR ATTACHMENT TO RAIL ON BRIDGE

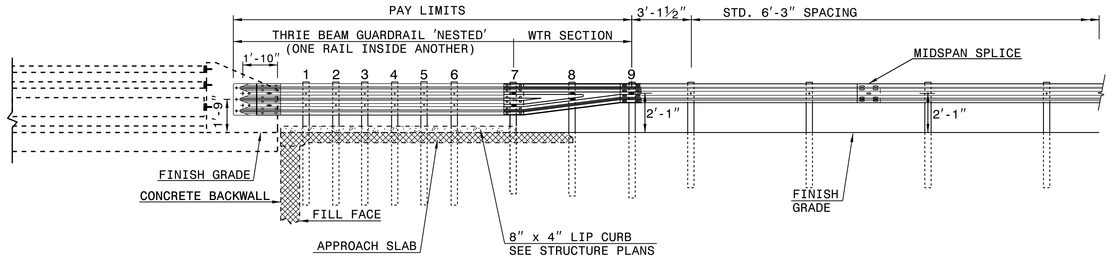

ELEVATION

NOTE:
**POST NOT REQUIRED FOR SKEW ANGLES GREATER THAN 150° OR LESS THAN 30° UNLESS OTHERWISE DIRECTED BY THE ENGINEER.
*THE DISTANCE FROM END OF BRIDGE RAIL TO CENTER LINE OF THE FIRST POST SHOULD BE 11½" IF CONCRETE BACKWALL IS NOT PRESENT.
-SHOULDER BERM GUTTER MUST BE INSTALLED TO THE LIMITS 8" x 4" LIP CURB IS SHOWN IF ANCHOR UNIT IS NOT ADJACENT TO AN APPROACH SLAB.
-MEASURE GUARDRAIL HEIGHT FROM THE TOP OF ADJACENT SURFACE (SHOULDER, BERM, OR GUTTER).
-LAP JOINTS IN THE DIRECTION OF TRAFFIC FLOW.
-SEE SHEET 3 FOR POST SECTIONS 1 THRU 9.

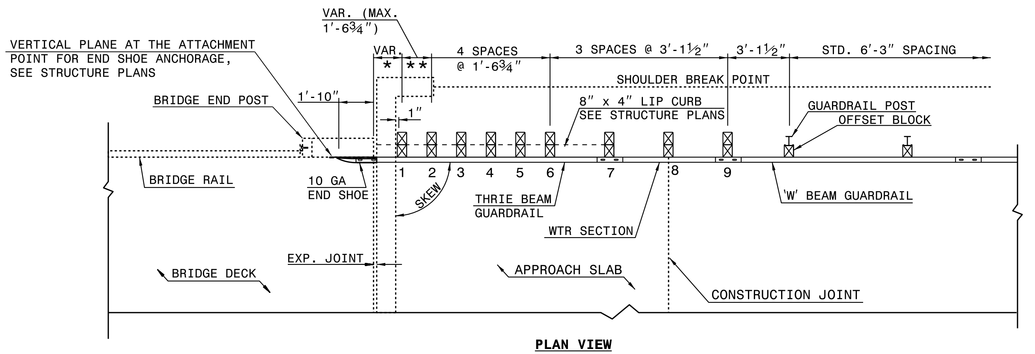

PLAN VIEW

GUARDRAIL ANCHOR UNIT, TYPE III FOR ATTACHMENT TO RAIL ON BRIDGE

SHEET 1 OF 7
862D03

STATE OF NORTH CAROLINA
DEPT. OF TRANSPORTATION
DIVISION OF HIGHWAYS
RALEIGH, N.C.

ROADWAY DETAIL DRAWING FOR
STRUCTURE ANCHOR UNITS
GUARDRAIL ANCHOR UNIT, TYPE III
FOR ATTACHMENT TO RAIL ON BRIDGE

SHEET 1 OF 7
862D03

STATE OF NORTH CAROLINA
DEPT. OF TRANSPORTATION
DIVISION OF HIGHWAYS
RALEIGH, N.C.

ROADWAY DETAIL DRAWING FOR
STRUCTURE ANCHOR UNITS
GUARDRAIL ANCHOR UNIT, TYPE III FOR ATTACHMENT TO
RAIL ON BRIDGE - SUB REGIONAL TIER

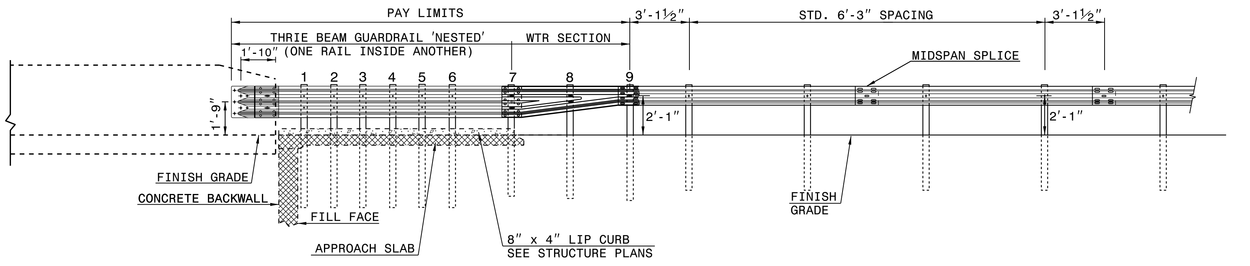

ELEVATION

NOTE:
**POST NOT REQUIRED FOR SKEW ANGLES GREATER THAN 150° OR LESS THAN 30° UNLESS OTHERWISE DIRECTED BY THE ENGINEER.
*THE DISTANCE FROM END OF BRIDGE RAIL TO CENTER LINE OF THE FIRST POST SHOULD BE 11½" IF CONCRETE BACKWALL IS NOT PRESENT.
-SHOULDER BERM GUTTER MUST BE INSTALLED TO THE LIMITS 8" x 4" LIP CURB IS SHOWN IF ANCHOR UNIT IS NOT ADJACENT TO AN APPROACH SLAB.
-MEASURE GUARDRAIL HEIGHT FROM THE TOP OF ADJACENT SURFACE (SHOULDER, BERM, OR GUTTER).
-LAP JOINTS IN THE DIRECTION OF TRAFFIC FLOW.
-SEE SHEET 3 FOR POST SECTIONS 1 THRU 9.

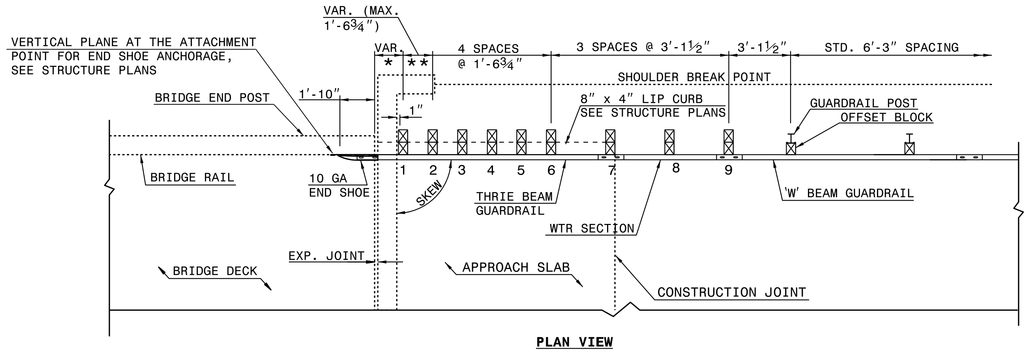

PLAN VIEW

GUARDRAIL ANCHOR UNIT, TYPE III FOR ATTACHMENT TO RAIL ON BRIDGE - SUB REGIONAL TIER

SHEET 2 OF 7
862D03

STATE OF NORTH CAROLINA
DEPT. OF TRANSPORTATION
DIVISION OF HIGHWAYS
RALEIGH, N.C.

ROADWAY DETAIL DRAWING FOR
STRUCTURE ANCHOR UNITS
GUARDRAIL ANCHOR UNIT, TYPE III FOR ATTACHMENT TO
RAIL ON BRIDGE - SUB REGIONAL TIER

SHEET 2 OF 7
862D03

SEE TITLE BLOCK

ORIGINAL BY: J. HOWERTON DATE: 06-22-12
MODIFIED BY: DATE:
CHECKED BY: DATE:
FILE SPEC.:

CONTRACT STANDARDS AND DEVELOPMENT UNIT
Office 919-707-6950 FAX 919-250-4119

DOCUMENT NOT CONSIDERED FINAL UNLESS ALL SIGNATURES COMPLETED

DocuSigned by:
Jason Hunter
DocuSign Envelope ID: 53308BDD-0F30-43E8-80F2-E718630BA13F

NORTH CAROLINA PROFESSIONAL SEAL 022966 ENGINEER
Jason Hunter
3/26/2020

PROJECT REFERENCE NO. 17BP.8.R.133
SHEET NO. 2C-2

12/06/07

COMPUTED BY:	DATE:
CHECKED BY:	DATE:

STATE OF NORTH CAROLINA
DIVISION OF HIGHWAYS

PROJECT REFERENCE NO.	SHEET NO.
17BP.8.R.133	3B-1

SUMMARY OF EARTHWORK

IN CUBIC YARDS

STATION	STATION	UNCL. EXCAV.	EMBANK. +%	BORROW	WASTE
–L– 11+20	15+50.83	1,735	1,165		638
	SUBTOTAL	1,735	1,165		638
–L– 16+58.17	19+65	149	883	734	76
	SUBTOTAL	149	883	734	76
TOTAL		1,884	2,048	734	714
MATERIAL FOR SHOULDER CONSTRUCTION			259	259	
LOSS DUE TO CLEARING & GRUBBING		–200		200	
WASTE IN LIEU OF BORROW				–570	–570
PROJECT TOTAL		1,684	2,308	624	–570
EST. 5% TO REPLACE TOP SOIL ON BORROW PIT				31	
GRAND TOTALS:		1,684		655	
SAY:		1,700		700	

SHALLOW UNDERCUT EXCAVATION CONTINGENCY PER GEOTECH REPORT = 100 CY
UNDERCUT EXCAVATION CONTINGENCY PER GEOTECH REPORT = 400 CY
SELECT GRANULAR MATERIAL PER GEOTECH REPORT = 470 CY
CLASS IV SUBGRADE STABILIZATION PER GEOTECH REPORT = 100 TONS
GEOTEXTILE FOR SOIL STABILIZATION CONTINGENCY PER GEOTECH REPORT = 700 SY

Earthwork quantities are calculated by the Roadway Design Unit. These earthwork quantities are based in part on subsurface data provided by the Geotechnical Engineering Unit.

Note: Approximate quantities only. Unclassified Excavation, Borrow Excavation, Fine Grading, Clearing and Grubbing and Removal of Asphalt Pavement will be paid for at the contract lump sum price for grading.

SUMMARY OF EXISTING ASPHALT PAVEMENT REMOVAL

SURVEY LINE	STATION	STATION	LOCATION LT/RT/CL	YD^2
L	11+70	12+40	CL	132
L	15+00	15+71	CL	134
L	16+52	17+00	CL	91
			TOTAL:	357
			SAY:	360

SHOULDER BERM GUTTER SUMMARY

SURVEY LINE	STATION	STATION	LENGTH
L (LT SIDE)	16+73.0	16+89	16
		TOTAL:	16
		SAY:	20

"N" = DISTANCE FROM EDGE OF LANE TO FACE OF GUARDRAIL.
TOTAL SHOULDER WIDTH = DISTANCE FROM EDGE OF TRAVEL LANE TO SHOULDER BREAK POINT.
FLARE LENGTH = DISTANCE FROM LAST SECTION OF PARALLEL GUARDRAIL TO END OF GUARDRAIL.
W = TOTAL WIDTH OF FLARE FROM BEGINNING OF TAPER TO END OF GUARDRAIL.
G = GATING IMPACT ATTENUATOR TYPE 350
NG = NON-GATING IMPACT ATTENUATOR TYPE 350

GUARDRAIL SUMMARY

SURVEY LINE	BEG. STA.	END STA.	LOCATION	LENGTH			WARRANT POINT		"N" DIST. FROM E.O.L.	TOTAL SHOUL. WIDTH	FLARE LENGTH		W		ANCHORS									IMPACT ATTENUATOR TYPE 350			SINGLE FACED CONCRETE BARRIER	REMOVE EXISTING GUARDRAIL	REMOVE AND STOCKPILE EXISTING GUARDRAIL	REMARKS
				STRAIGHT	SHOP CURVED	DOUBLE FACED	APPROACH END	TRAILING END			APPROACH END	TRAILING END	APPROACH END	TRAILING END	XI MOD	XI	GREU TL-3	M-350	TYPE III	CAT-1	VI MOD	BIC	AT-1	EA	G	NG				
L	14+81	15+56	LT	75.00				15+56	6	9		50		1			1		1											
L	11+50	15+48.54	RT	400.00			12+00		6	9	50		1				1		1											
L	16+61	18+23.50	LT	162.50			17+50		6	9	50		1				1		1											
L	16+53.54	18+16.04	RT	162.50				17+40	6	9		50		1			1		1											
		SUBTOTAL		800.00													4		4											
		LESS ANCHOR DEDUCTIONS																												
		GREU TL-3 4 @ 50'		–200.00																										
		TYPE III 4 @ 18.75'		–75.00																										
		TOTAL		525.00													4		4											
		SAY		525.00			5 ADDITIONAL GUARDRAIL POSTS										4		4											

12/3/2019
R:\Roadway\Proj\Mont123_Rdy_sum.dgn

COMPUTED BY: _____ DATE: _____
CHECKED BY: BAW DATE: _____

PROJECT REFERENCE NO.	SHEET NO.
17BP.8.R.133	3D-1

STATE OF NORTH CAROLINA
DIVISION OF HIGHWAYS

LIST OF PIPES, ENDWALLS, ETC. (FOR PIPES 48" & UNDER)

STATION / SIZE / THICKNESS OR GAUGE	LOCATION (LT,RT, OR CL)	STRUCTURE NO. FROM	STRUCTURE NO. TO	TOP ELEVATION	INVERT ELEVATION	INVERT ELEVATION	SLOPE CRITICAL	DRAINAGE PIPE (RCP, CSP, CAAP, HDPE, or PVC) 12"	15"	18"	24"	30"	36"	42"	48"	DO NOT USE RCP	DO NOT USE CSP	DO NOT USE CAAP	DO NOT USE HDPE	C.S. PIPE 12"	15"	18"	24"	30"	36"	42"	48"	.064	.064	.064	.064	.079	.079	.109	.109
16+78	LT	0401		473.3	470.6																														
		0401	0402		470.6	462.0			32							X	X	X																	
TOTALS									32																										

STATION / SIZE / THICKNESS OR GAUGE	R.C. PIPE CLASS III 12"	15"	18"	24"	30"	36"	42"	48"	R.C. PIPE CLASS IV 12"	15"	18"	24"	30"	36"	42"	48"	*** R.C. PIPE (CLASS V)	**** RC PIPE CULVERTS, CONTRACTOR DESIGN	15" SIDE DRAIN PIPE	18" SIDE DRAIN PIPE	ENDWALLS STD. 838.01, STD. 838.11 OR STD. 838.80 (UNLESS NOTED OTHERWISE) CU. YDS. R.C.P.	C.S.P.	QUANTITIES FOR DRAINAGE STRUCTURES * TOTAL L.F. FOR PAY QUANTITY SHALL BE COL. 'A' + (1.3 X COL.'B') PER EACH (0' THRU 5.0')	LIN. *FT. A 5.0' THRU 10.0'	B 10.0' AND ABOVE	C.B. STD. 840.01 OR STD. 840.02	FRAME, GRATES AND HOOD STANDARD 840.03 TYPE OF GRATE E	F	G		CONCRETE TRANSITIONAL SECTION DROP INLET	CATCH BASIN				G.D.I. TYPE "B" STD. 840.18 OR 840.27	T.B.D.I. STD. 840.35	G.D.I. FRAME WITH TWO N.S. SAG GRATES STD. 840.24	G.D.I. FRAME WITH TWO N.S. FLAT GRATES STD. 840.29									DRAINAGE PIPE ELBOWS NO. & SIZE	CONC. & BRICK PIPE PLUG, C.Y. STD. 840.71	CONC. COLLARS CL. "B" C.Y. STD 840.72	PIPE REMOVAL LIN.FT.	REMARKS
16+78																							1										1		1
TOTALS																							1										1		1

ABBREVIATIONS

C.B.	CATCH BASIN
N.D.I.	NARROW DROP INLET
D.I.	DROP INLET
G.D.I.	GRATED DROP INLET
G.D.I. (N.S.)	GRATED DROP INLET (NARROW SLOT)
J.B.	JUNCTION BOX
M.H.	MANHOLE
T.B.D.I.	TRAFFIC BEARING DROP INLET
T.B.J.B.	TRAFFIC BEARING JUNCTION BOX

4/04/06

11/12/2019
R:\Roadway\Proj\Mont123_Rdy_sum.dgn
TIFNWAY

COMPUTED BY: _____ DATE: _____
CHECKED BY: _____ DATE: _____

(12-17-19)

PROJECT NO.	SHEET NO.
17BP.8.R.133	3G-1

STATE OF NORTH CAROLINA
DIVISION OF HIGHWAYS

SUMMARY OF SUBSURFACE DRAINAGE

LINE	Station	Station	Location LT/RT/CL	Drain Type* UD/BD/SD	LF
CONTINGENCY				UD	200
				TOTAL LF:	200

***UD = Underdrain**
***BD = Blind Drain**
***SD = Subsurface Drain**

SUMMARY OF AGGREGATE SUBGRADE/STABILIZATION

LINE	Station	Station	Aggregate Type* ASU(1/2)/ AST	Aggregate Thickness INCHES [8" for ASU(2)]	Shallow Undercut CY	Class IV Subgrade Stabilization TONS	Geotextile for Soil Stabilization SY	Stabilizer Aggregate TONS	Class IV Aggregate Stabilization TONS
L	14+88	15+52					260		
L	16+69	17+38					240		
CONTINGENCY					100	100	200		
			TOTAL CY/TONS/SY:		100	100**	700**	0	0

***ASU(1/2) = Aggregate Subgrade (Type 1 or 2)**
***AST = Aggregate Stabilization**
****Total tons of "Class IV Subgrade Stabilization" and total square yards of "Geotextile for Soil Stabilization" are only the estimated quantities for ASU(1/2)/AST and may only represent a portion of the subgrade stabilization and geotextile quantities shown in the Item Sheets of the Proposal.**

DocuSign Envelope ID: F10926BF-9326-425B-B06F-3DEC7C704110

8/17/99

REVISIONS

PROJECT REFERENCE NO.	SHEET NO.
17BP.8.R.133	4

MONTGOMERY COUNTY BRIDGE #123

CH ENGINEERING
3220 GLEN ROYAL RD. RALEIGH, NC 27617
TELE 919.788.0224 FAX 919.788.0232
NC LICENSE #P-0189

MI ENGINEERING
1011 SCHAUB DRIVE, SUITE 100
RALEIGH, NC 27606
(919) 851-6606
FIRM PE NUMBER : P-0671

ROADWAY DESIGN ENGINEER 8/26/2020
NORTH CAROLINA PROFESSIONAL SEAL 16689 ENGINEER BRIAN ALLEN WILES
DocuSigned by: Brian A Wiles
8/26/2020 | 8:50:00 AM EDT

HYDRAULICS ENGINEER 8/26/2020
NORTH CAROLINA PROFESSIONAL SEAL 040302 ENGINEER WILLIAM KEITH JERNIGAN, JR.
DocuSigned by: Bill Jernigan
8/26/2020 | 8:53:00 AM EDT

DOCUMENT NOT CONSIDERED FINAL UNLESS ALL SIGNATURES COMPLETED

-L-

PI Sta 10+61.32	PI Sta 13+43.93	PI Sta 17+98.44	PI Sta 22+29.55
Δ = 1° 41' 20.8" (LT)	Δ = 32° 21' 47.8" (LT)	Δ = 0° 56' 27.4" (LT)	Δ = 4° 15' 15.9" (LT)
D = 1° 56' 12.9"	D = 12° 03' 44.2"	D = 0° 54' 10.8"	D = 4° 52' 12.6"
L = 87.21'	L = 268.30'	L = 104.20'	L = 87.36'
T = 43.61'	T = 137.84'	T = 52.10'	T = 43.70'
R = 2,958.08'	R = 475.00'	R = 6,345.00'	R = 1,176.46'

NAD 83/NA 2011

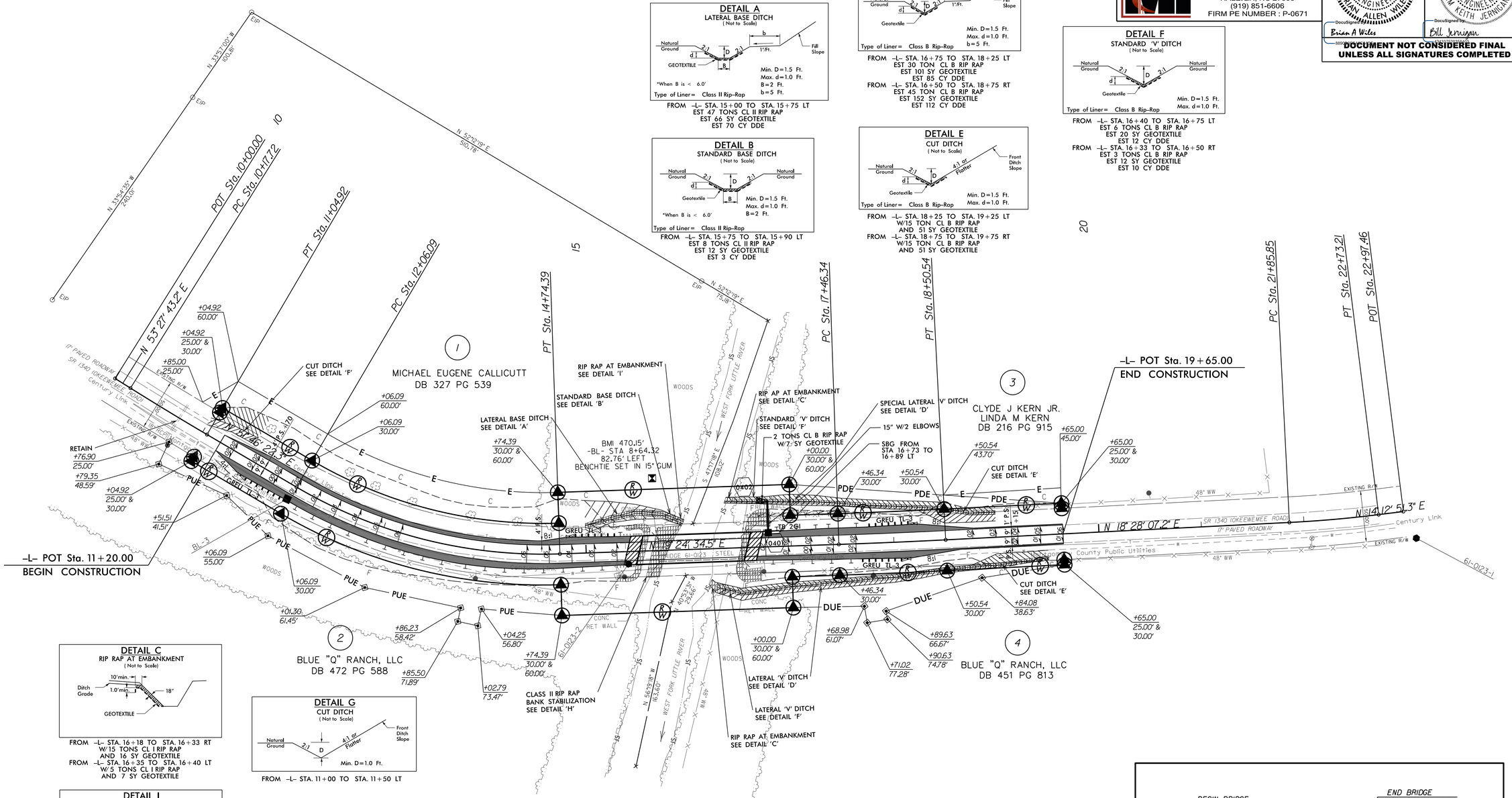

DETAIL A
LATERAL BASE DITCH
(Not to Scale)

Natural Ground; 2:1; d; D; 2:1; b; 1'/Ft.; Fill Slope; GEOTEXTILE; B

*When B is < 6.0'

Min. D=1.5 Ft.
Max. d=1.0 Ft.
B=2 Ft.
b=5 Ft.

Type of Liner= Class II Rip-Rap

FROM -L- STA. 15+00 TO STA. 15+75 LT
EST 47 TONS CL II RIP RAP
EST 66 SY GEOTEXTILE
EST 70 CY DDE

DETAIL B
STANDARD BASE DITCH
(Not to Scale)

Natural Ground; 2:1; d; D; 2:1; Natural Ground; Geotextile; B

*When B is < 6.0'

Min. D=1.5 Ft.
Max. d=1.0 Ft.
B=2 Ft.

Type of Liner= Class II Rip-Rap

FROM -L- STA. 15+75 TO STA. 15+90 LT
EST 8 TONS CL II RIP RAP
EST 12 SY GEOTEXTILE
EST 3 CY DDE

DETAIL D
LATERAL 'V' DITCH
(Not to Scale)

Natural Ground; 2:1; d; D; 2:1; b; 1'/Ft.; Fill Slope; Geotextile

Min. D=1.5 Ft.
Max. d=1.0 Ft.
b=5 Ft.

Type of Liner= Class B Rip-Rap

FROM -L- STA. 16+75 TO STA. 18+25 LT
EST 30 TON CL B RIP RAP
EST 101 SY GEOTEXTILE
EST 85 CY DDE
FROM -L- STA. 16+50 TO STA. 18+75 RT
EST 45 TON CL B RIP RAP
EST 152 SY GEOTEXTILE
EST 112 CY DDE

DETAIL E
CUT DITCH
(Not to Scale)

Natural Ground; 2:1; d; D; 4:1 or Flatter; Front Ditch Slope; Geotextile

Min. D=1.5 Ft.
Max. d=1.0 Ft.

Type of Liner= Class B Rip-Rap

FROM -L- STA. 18+25 TO STA. 19+25 LT
W/15 TON CL B RIP RAP
AND 51 SY GEOTEXTILE
FROM -L- STA. 18+75 TO STA. 19+75 RT
W/15 TON CL B RIP RAP
AND 51 SY GEOTEXTILE

DETAIL F
STANDARD 'V' DITCH
(Not to Scale)

Natural Ground; 2:1; d; D; 2:1; Natural Ground; Geotextile

Min. D=1.5 Ft.
Max. d=1.0 Ft.

Type of Liner= Class B Rip-Rap

FROM -L- STA. 16+40 TO STA. 16+75 LT
EST 6 TONS CL B RIP RAP
EST 20 SY GEOTEXTILE
EST 12 CY DDE
FROM -L- STA. 16+33 TO STA. 16+50 RT
EST 3 TONS CL B RIP RAP
EST 12 SY GEOTEXTILE
EST 10 CY DDE

DETAIL C
RIP RAP AT EMBANKMENT
(Not to Scale)

10' min.; Ditch Grade; 1.0' min.; 18"; GEOTEXTILE

FROM -L- STA. 16+18 TO STA. 16+33 RT
W/15 TONS CL I RIP RAP
AND 16 SY GEOTEXTILE
FROM -L- STA. 16+35 TO STA. 16+40 LT
W/5 TONS CL I RIP RAP
AND 7 SY GEOTEXTILE

DETAIL G
CUT DITCH
(Not to Scale)

Natural Ground; 2:1; D; 4:1 or Flatter; Front Ditch Slope

Min. D=1.0 Ft.

FROM -L- STA. 11+00 TO STA. 11+50 LT

DETAIL I
RIP RAP AT EMBANKMENT
(Not to Scale)

10' min.; Ditch Grade; 1.0' min.; 24"; GEOTEXTILE

FROM -L- STA. 15+90 TO STA. 15+97 LT
W/7 TONS CL II RIP RAP
AND 11 SY GEOTEXTILE

DETAIL H
BANK STABILIZATION
(Not to Scale)

EXIST. STREAMBED; NATURAL GROUND; 2ft.; GEOTEXTILE; NATURAL GROUND

Type of Liner= CL II RIP RAP, Est. 103 TONS
Est. Geotextile=875sy

FOR PROFILE, SEE SHEET 5

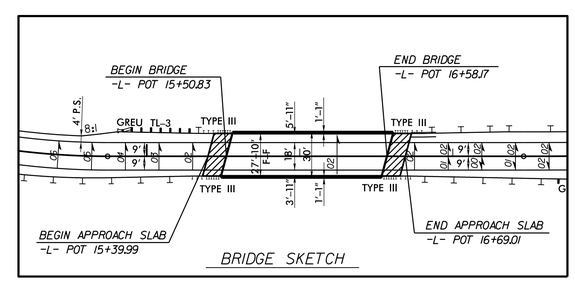

BRIDGE SKETCH

8/24/2019
R:\Roadway\Proj\Mont123_Rdy_psh_04.dgn

DocuSign Envelope ID: F10926BF-9326-425B-B06F-3DEC7C704110

CH ENGINEERING
3220 GLEN ROYAL RD. RALEIGH, NC 27617
TELE 919.788.0224 FAX 919.788.0232
NC LICENSE #P-0189

MI ENGINEERING
1011 SCHAUB DRIVE, SUITE 100
RALEIGH, NC 27606
(919) 851-6606
FIRM PE NUMBER : P-0671

PROJECT REFERENCE NO.	SHEET NO.
17BP.8.R.133	5

ROADWAY DESIGN ENGINEER 3/26/2020
NORTH CAROLINA PROFESSIONAL SEAL 16689 ENGINEER BRIAN ALLEN WILES
DocuSigned by: Brian A Wiles

HYDRAULICS ENGINEER 3/26/2020
NORTH CAROLINA PROFESSIONAL SEAL 040302 ENGINEER WILLIAM KEITH JERNIGAN, JR.
DocuSigned by: Bill Jernigan

DOCUMENT NOT CONSIDERED FINAL UNLESS ALL SIGNATURES COMPLETED

5/14/99

-L-

BRIDGE HYDRAULIC DATA

DESIGN DISCHARGE	= 4500	CFS
DESIGN FREQUENCY	= 25	YRS
DESIGN HW ELEVATION	= 469.9	FT
BASE DISCHARGE	= 6240	CFS
BASE FREQUENCY	= 100	YRS
BASE HW ELEVATION	= 470.6	FT
OVERTOPPING DISCHARGE	= 17500	CFS
OVERTOPPING FREQUENCY	= 500+	YRS
OVERTOPPING ELEVATION	= 472.9	FT
DATE OF SURVEY	= 7/17/18	
W.S. ELEVATION AT DATE OF SURVEY	= 458.25	FT

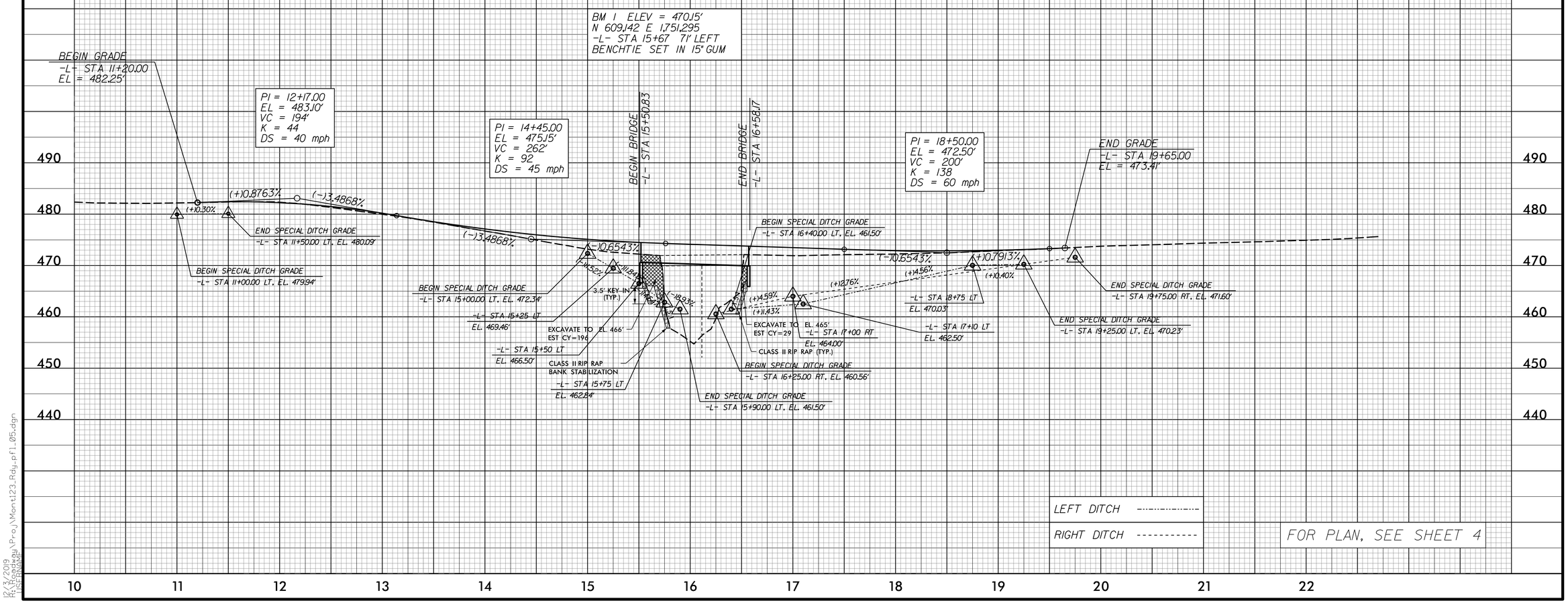

FOR PLAN, SEE SHEET 4

12/3/2019
R:\Roadway\Proj\Mont123_Rdy_pfl_05.dgn
USERNAME

STATE	STATE PROJECT REFERENCE NO.	SHEET NO.	TOTAL SHEETS
N.C.	17BP.8.R.133	RW01	

TIP PROJECT: 17BP.8.R.133

STATE OF NORTH CAROLINA
DIVISION OF HIGHWAYS

SURVEY CONTROL, EXISTING CENTERLINES, RIGHT OF WAY, EASEMENTS AND PROPERTY TIES

MONTGOMERY COUNTY

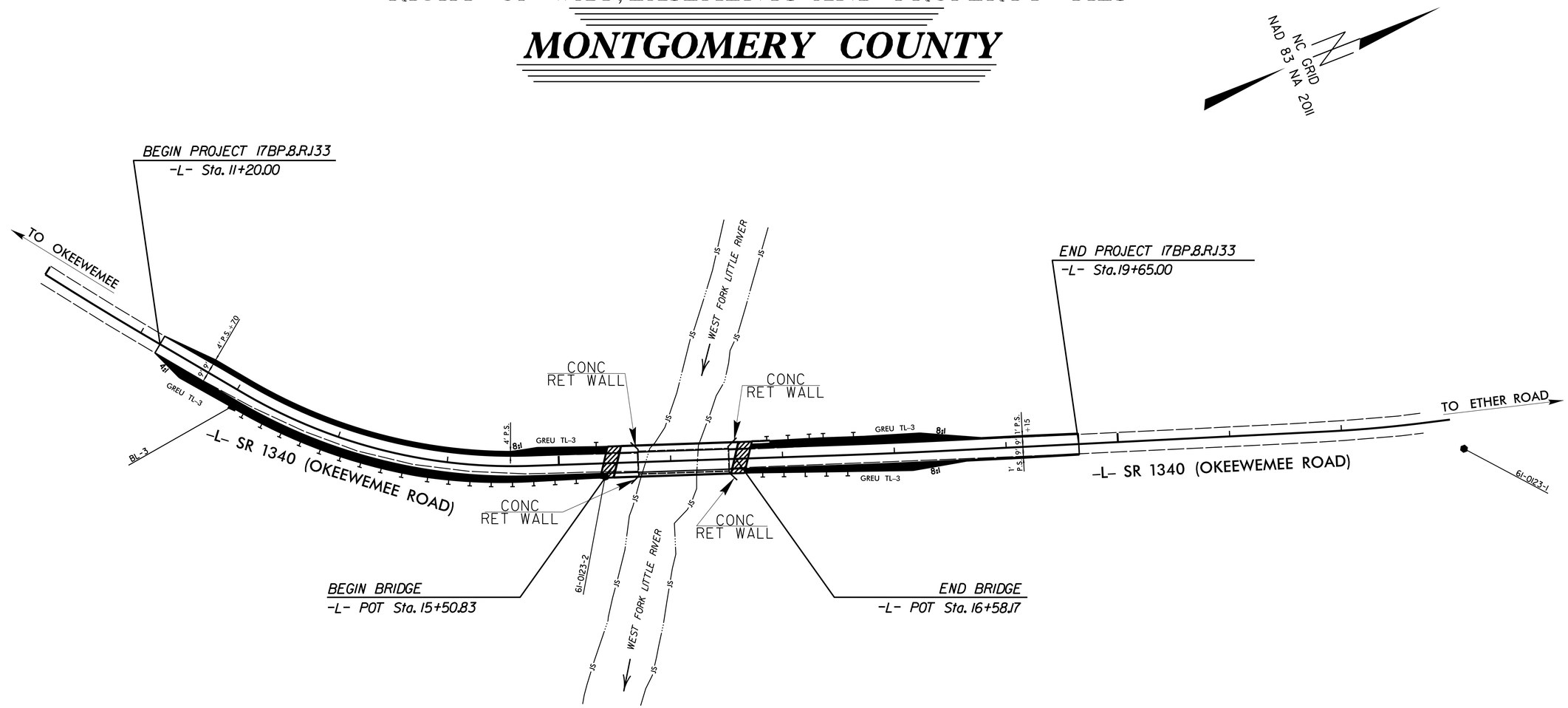

GRAPHIC SCALE

50 25 0 50 100

PLANS

DATUM DESCRIPTION

THE LOCALIZED COORDINATE SYSTEM DEVELOPED FOR THIS PROJECT
IS BASED ON THE STATE PLANE COORDINATES ESTABLISHED BY
NCGS FOR MONUMENT "61-0123-2"
WITH NAD 83/NSRS 2011 STATE PLANE GRID COORDINATES OF
NORTHING: 609,090.1510(ft) EASTING: 1,751,364.92(ft)
ELEVATION: 471.59(ft)
THE AVERAGE COMBINED GRID FACTOR USED ON THIS PROJECT
(GROUND TO GRID) IS: 0.99984960
THE N.C. LAMBERT GRID BEARING AND
LOCALIZED HORIZONTAL GROUND DISTANCE FROM
"BL-3" TO -L- STATION 11+20 IS
S 61^ 43' 25.62" W 85.23(ft)
ALL LINEAR DIMENSIONS ARE LOCALIZED HORIZONTAL DISTANCES
VERTICAL DATUM USED IS NAVD 88 GEOID G12NC.

Prepared in the Office of:

SEPI
1 Glenwood Avenue
Raleigh, NC 27603
Tel:919.789.9977
Fax:919.789.9591
License: C-2197

2018 STANDARD SPECIFICATIONS

RIGHT OF WAY DATE:

LETTING DATE:

PROFESSIONAL LAND SURVEYOR

NORTH CAROLINA PROFESSIONAL SEAL L-3994 LAND SURVEYOR JEFFREY S. COATS

DocuSigned by:
Jeffrey S. Coats
49B9E8CC3DF54D9...
5/9/2019

SIGNATURE: *Date:*

STATE OF NORTH CAROLINA • DEPARTMENT OF TRANSPORTATION

PROJECT REFERENCE NO.	SHEET NO.
17BP.8.R.133	RW02C-1
Location and Surveys	

SEPI
1 Glenwood Avenue
Raleigh, NC 27603
Tel:919.789.9977
Fax:919.789.9591
License: C-2197

SURVEY CONTROL SHEET

W/ EXISTING CENTERLINE ALIGNMENTS PRIOR TO CONSTRUCTION

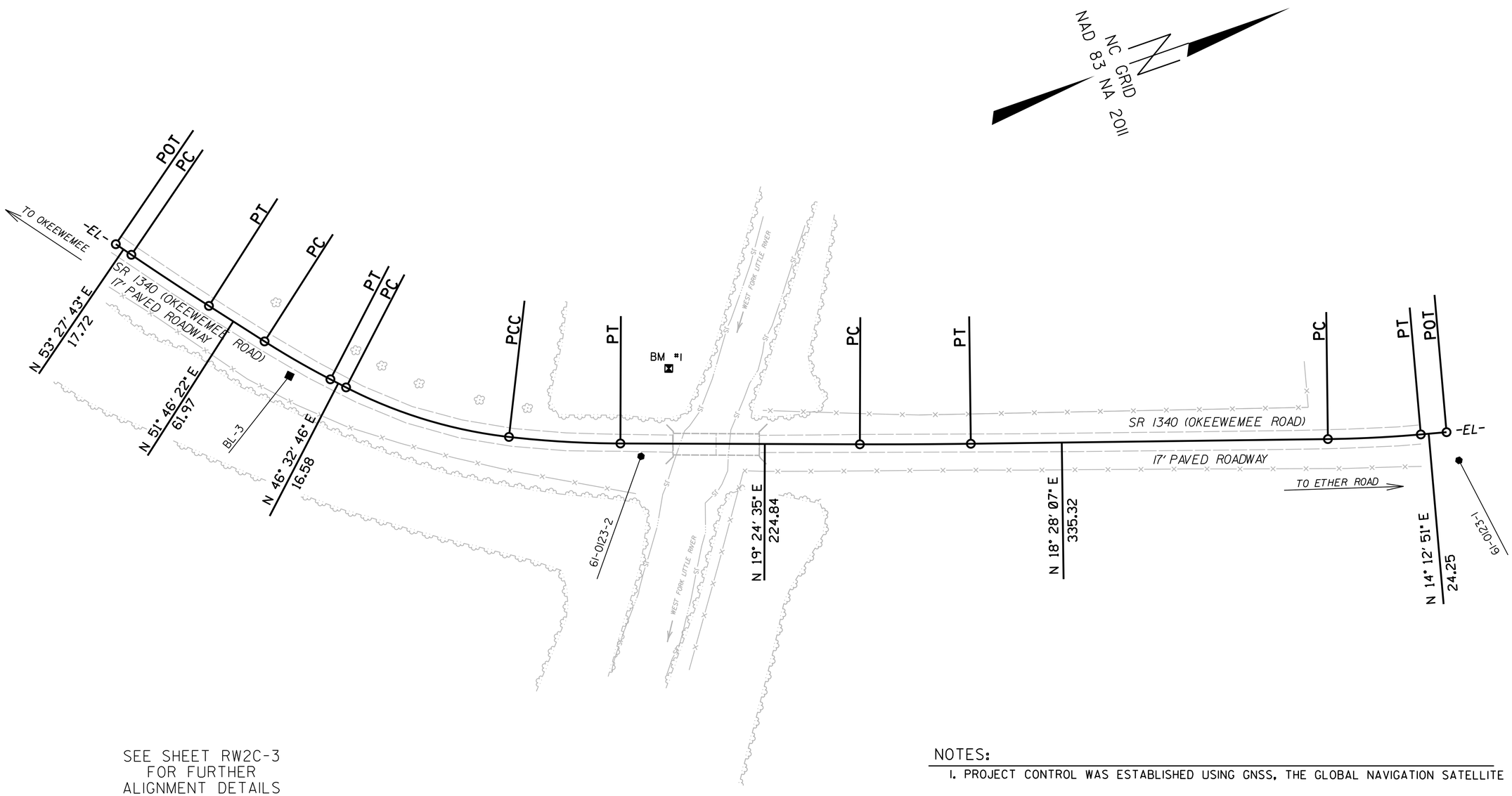

SEE SHEET RW2C-3
FOR FURTHER
ALIGNMENT DETAILS

NOTES:

1. PROJECT CONTROL WAS ESTABLISHED USING GNSS, THE GLOBAL NAVIGATION SATELLITE SYSTEM.

2. THE SURVEY CONTROL DATA FOR THIS PROJECT HAS BEEN COMPILED FROM VARIOUS SOURCES. IF FURTHER INFORMATION REGARDING PROJECT CONTROL IS NEEDED, PLEASE CONTACT THE LOCATION AND SURVEYS UNIT.

PROJECT REFERENCE NO.	SHEET NO.
17BP.8.R.133	RW02C-2

Location and Surveys

SEPI
1 Glenwood Avenue
Raleigh, NC 27603
Tel:919.789.9977
Fax:919.789.9591
License: C-2197

SURVEY CONTROL SHEET

W/ EXISTING CENTERLINE ALIGNMENTS PRIOR TO CONSTRUCTION

BL

POINT	DESC.	NORTH	EAST	ELEVATION
3	BL-3	608803.2438	1751184.8239	480.82
2	610123-2	609090.1510	1751364.9200	471.59
1	610123-1	609814.2369	1751621.2896	476.15

****
BM1 ELEVATION = 470.15
N 609142 E 1751295
BENCH TIE SET IN 15" GUM
****

EL

POINT	N	E	BEARING	DIST	DELTA	D	L	T	R
POT	608690.046	1751014.390							
LINE			N 53°27'43.2" E	17.72					
PC	608700.593	1751028.624							
CURVE			N 52°37'02.8" E	87.20	01°41'20.8"(LT)	01°56'13.3"	87.20	43.61	2958.08
PT	608753.537	1751097.916							
LINE			N 51°46'22.3" E	61.97					
PC	608791.882	1751146.597							
CURVE			N 49°09'34.1" E	71.35	05°13'36.4"(LT)	07°19'41.1"	71.33	35.71	782.40
PT	608838.541	1751200.575							
LINE			N 46°32'45.9" E	16.58					
PC	608849.942	1751212.608							
CURVE			N 36°08'20.6" E	159.87	20°48'50.7"(LT)	12°58'32.2"	160.41	81.27	442.51
PCC	608979.051	1751306.891							
CURVE			N 22°34'14.9" E	104.83	06°19'20.7"(LT)	06°01'41.1"	104.88	52.49	950.48
PT	609075.852	1751347.127							
LINE			N 19°24'34.5" E	224.84					
PC	609287.917	1751421.847							
CURVE			N 18°56'20.9" E	104.20	00°56'27.4"(LT)	00°54'10.9"	104.20	52.10	6344.97
PT	609386.474	1751455.666							
LINE			N 18°28'07.2" E	335.32					
PC	609704.521	1751561.890							
CURVE			N 16°20'29.3" E	87.34	04°15'15.9"(LT)	04°52'17.9"	87.33	43.70	1176.46
PT	609788.329	1751586.463							
LINE			N 14°12'51.3" E	24.25					
POT	609811.841	1751592.418							

NOTES:

1. PROJECT CONTROL WAS ESTABLISHED USING GNSS, THE GLOBAL NAVIGATION SATELLITE SYSTEM.

2. THE SURVEY CONTROL DATA FOR THIS PROJECT HAS BEEN COMPILED FROM VARIOUS SOURCES. IF FURTHER INFORMATION REGARDING PROJECT CONTROL IS NEEDED, PLEASE CONTACT THE LOCATION AND SURVEYS UNIT.

REVISIONS

PROJECT REFERENCE NO.	SHEET NO.
17BP.8.R.133	RW2D-1

Location and Surveys

SEPI
1 Glenwood Avenue
Raleigh, NC 27603
Tel:919.789.9977
Fax:919.789.9591
License: C-2197

REVISIONS

PROPOSED ALIGNMENT CONTROL SHEET

L

TYPE	STATION	NORTH	EAST
POT	10+00.00	608690.0455	1751014.3905
PC	10+17.72	608700.5927	1751028.6245
PT	11+04.92	608753.5368	1751097.9162
PC	12+06.09	608816.1392	1751177.3922
PT	14+74.39	609031.4305	1751331.4758
PC	17+46.34	609287.9165	1751421.8470
PT	18+50.54	609386.4741	1751455.6661
PC	21+85.85	609704.5210	1751561.8897
PT	22+73.21	609788.3291	1751586.4627
POT	22+97.46	609811.8414	1751592.4185

NOTES:

1. PROJECT CONTROL WAS ESTABLISHED USING GNSS, THE GLOBAL NAVIGATION SATELLITE SYSTEM.

2. THE PROPOSED ALIGNMENT CONTROL DATA FOR THIS PROJECT HAS BEEN COMPILED FROM VARIOUS SOURCES. IF FURTHER INFORMATINO REGARDING PROJECT CONTROL IS NEEDED, PLEASE CONTACT THE LOCATION AND SURVEYS UNIT.

6/2/99

REVISIONS

RIGHT OF WAY CONTROL SHEET

PROJECT REFERENCE NO.	SHEET NO.
17BP.8.R.133	RW03E-1

Location and Surveys

SEPI
1 Glenwood Avenue
Raleigh, NC 27603
Tel:919.789.9977
Fax:919.789.9591
License: C-2197

NORTH CAROLINA PROFESSIONAL SEAL L-3994 LAND SURVEYOR JEFFREY S. COATS

DOCUMENT NOT CONSIDERED FINAL UNLESS ALL SIGNATURES COMPLETED

I, JEFFREY S. COATS, a Professional Land Surveyor in the state of North Carolina hereby certify to the best of my knowledge and belief that the following work item(s) (Base map Compilation, R/W Staking) performed under my responsible charge meet NCDOT Survey Standards as directed in the NCDOT Location & Surveys guidelines and procedures.

I further certify that the data compiled came from available surveys/mapping performed by others and provided to me by NCDOT and do not certify to the accuracy or quality of the individual data sources.

I further certify that the right of way and permanent easement points shown herein and outlined in the tables shown hereon (localized coordinates, station/offset) have been checked and are accurate representations of the right of way and permanent easement points depicted on the corresponding highway plans. I also certify that the right of way and permanent easement points shown herein have been field monumented under my supervision from existing survey control provided by others; that the depicted property data shown herein were surveyed by others; and these monuments denote the right of way and easement boundaries at the time of staking which may be subject to change due to right of way revisions (See deeds for final determination).

Witness my original signature, registration number and seal this 19th day of April, 2019.

DocuSigned by:
Jeffrey S. Coats 11/5/2019
49B8E8CC3DE54D8...

Professional Land Surveyor L-3994 PLS # Seal

ROW MARKER IRON PIN AND CAP-E

ALIGN	STATION	OFFSET	NORTH	EAST
L	11+04.92	-25.00	608773.1759	1751082.4467
L	11+04.92	-30.00	608777.1038	1751079.3528
L	11+04.92	30.00	608729.9699	1751116.4796
L	11+04.92	25.00	608733.8977	1751113.3857
L	12+06.09	30.00	608792.5723	1751195.9556
L	12+06.09	-30.00	608839.7061	1751158.8287
L	14+74.39	60.00	609011.4914	1751388.0658
L	14+74.39	-30.00	609041.4001	1751303.1808
L	14+74.39	-60.00	609051.3697	1751274.8858
L	14+74.39	30.00	609021.4610	1751359.7708
L	17+00.00	60.00	609224.2750	1751463.0388
L	17+00.00	-60.00	609264.1533	1751349.8588
L	17+00.00	-30.00	609254.1837	1751378.1538
L	17+00.00	30.00	609234.2445	1751434.7438
L	17+46.34	30.00	609277.9469	1751450.1420
L	17+46.34	-30.00	609297.8860	1751393.5520
L	18+50.54	30.00	609376.9706	1751484.1210
L	18+50.54	-30.00	609395.9777	1751427.2112
L	19+65.00	-30.00	609504.5470	1751463.4719
L	19+65.00	30.00	609485.5398	1751520.3817
L	19+65.00	25.00	609487.1237	1751515.6393
L	19+65.00	-25.00	609502.9630	1751468.2144

ROW MARKER PERMANENT EASEMENT-E

ALIGN	STATION	OFFSET	NORTH	EAST
L	10+76.90	25.00	608716.5166	1751091.1034
L	10+79.35	48.59	608699.3721	1751107.4913
L	11+51.51	41.51	608749.7525	1751160.1977
L	12+06.09	55.00	608772.9332	1751211.4251
L	13+01.30	61.45	608842.3890	1751292.6686
L	13+85.50	71.89	608914.7477	1751356.4572
L	13+86.23	58.42	608922.2223	1751345.2196
L	14+02.79	73.47	608931.4004	1751367.5337
L	14+04.25	56.80	608940.6769	1751353.5855
L	17+68.98	61.07	609289.1949	1751487.0049
L	17+71.02	77.28	609285.8187	1751502.9894
L	17+89.63	66.67	609307.0760	1751499.1303
L	17+90.63	74.78	609305.3870	1751507.1225
L	18+84.08	38.63	609406.0503	1751502.9352

NOTES:

1. IF FURTHER INFORMATION REGARDING PROJECT CONTROL IS NEEDED, PLEASE CONTACT THE LOCATION AND SURVEYS UNIT.

2. PROJECT CONTROL WAS ESTABLISHED USING GNSS, THE GLOBAL NAVIGATION SATELLITE SYSTEM.

PROJECT REFERENCE NO.	SHEET NO.
17BP.8.R.133	RW04

Location and Surveys

SEPI ENGINEERING & CONSTRUCTION
1 Glenwood Avenue
Suite 600
Raleigh, NC 27603
Tel:919-789-9977
Fax:919-789-9591
License: C-2197

NORTH CAROLINA PROFESSIONAL SEAL L-3994 LAND SURVEYOR JEFFREY S. COATS

DOCUMENT NOT CONSIDERED FINAL UNLESS ALL SIGNATURES COMPLETED

I, JEFFREY S. COATS, a Professional Land Surveyor in the state of North Carolina hereby certify to the best of my knowledge and belief that the following work item(s) (R/W Staking) performed under my responsible charge meet NCDOT Survey Standards as directed in the NCDOT Location & Surveys guidelines and procedures.

I further certify that the right of way and permanent easement points shown herein and outlined in the tables shown hereon (localized coordinates, station/offset) have been checked and are accurate representations of the right of way and permanent easement points depicted on the corresponding highway plans. I also certify that the right of way and permanent easement points shown herein have been field monumented under my supervision from existing survey control provided by others; that the depicted property data shown herein were surveyed by others; and these monuments denote the right of way and easement boundaries at the time of staking which may be subject to change due to right of way revisions (See deeds for final determination).

Witness my original signature, registration number and seal this 30th day of April, 2019.

DocuSigned by:
Jeffrey S. Coats 11/5/2019
49B9E8CC3DF54D9...

Professional Land Surveyor PLS # L-3994 Seal

REVISIONS

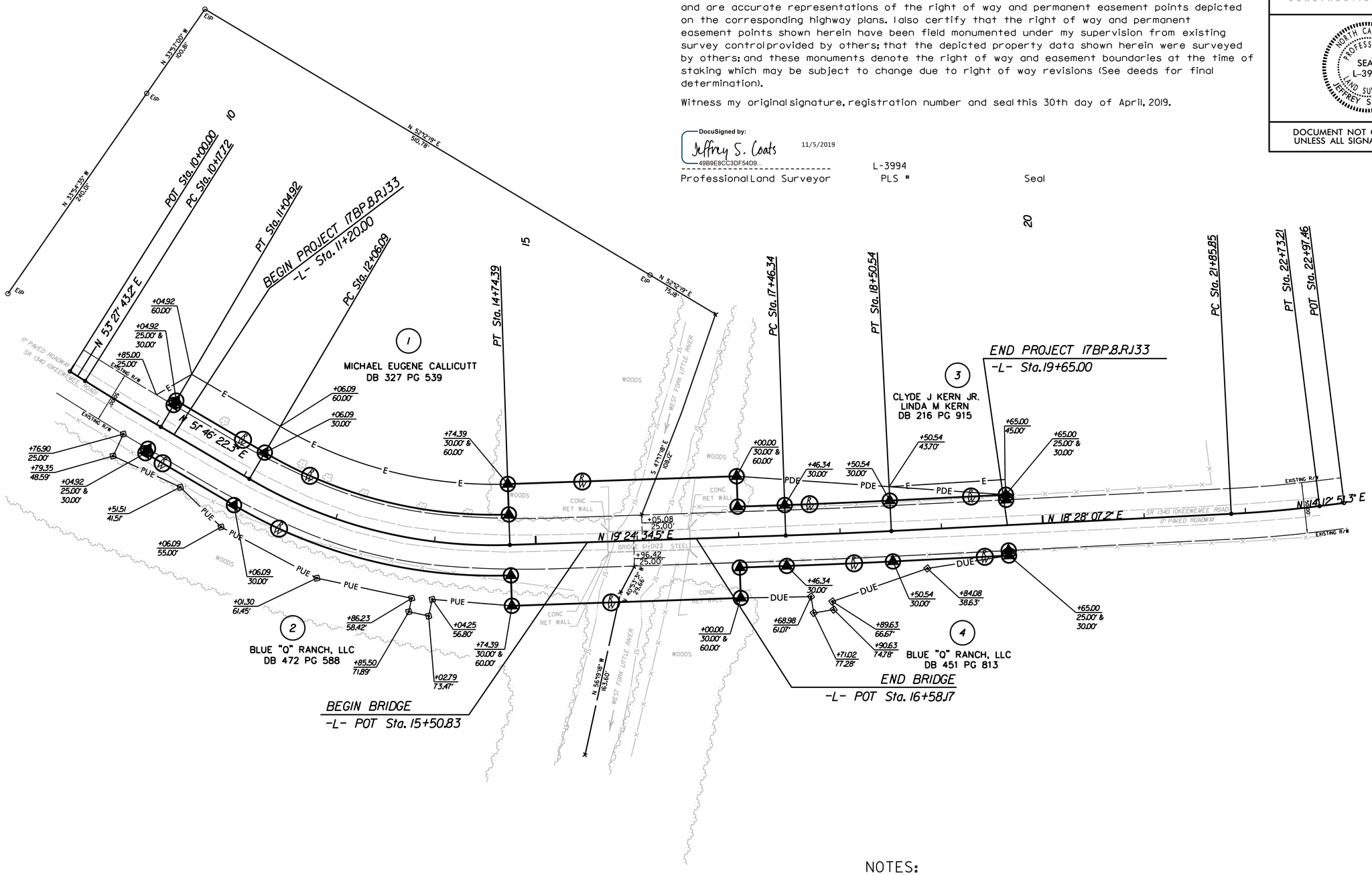

NOTES:

1. IF FURTHER INFORMATION REGARDING PROJECT CONTROL IS NEEDED, PLEASE CONTACT THE LOCATION AND SURVEYS UNIT.

2. PROJECT CONTROL WAS ESTABLISHED USING GNSS, THE GLOBAL NAVIGATION SATELLITE SYSTEM.

DocuSign Envelope ID: D0B21936-B308-4A25-9E99-474E79CBE3E2

STATE OF NORTH CAROLINA
DIVISION OF HIGHWAYS

TRANSPORTATION MANAGEMENT PLAN

MONTGOMERY COUNTY

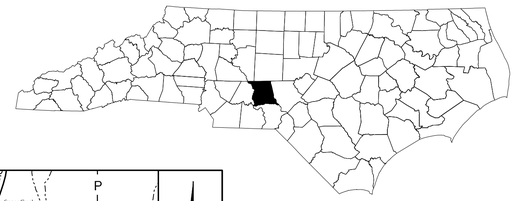

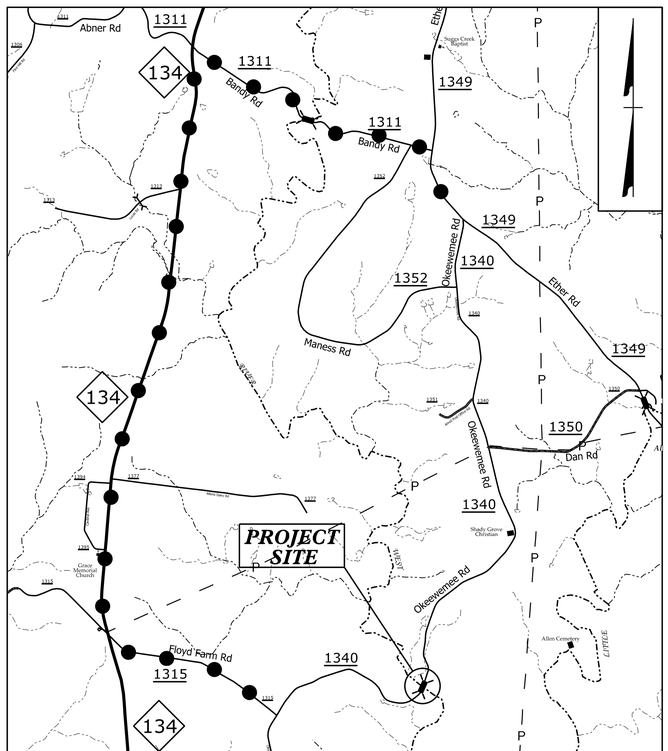

VICINITY MAP

DETOUR ROUTE

LOCATION: BRIDGE NO. 123 OVER WEST FORK LITTLE RIVER ON SR 1340 (OKEEWEMEE ROAD)

TYPE OF WORK: GRADING, DRAINAGE, PAVING, & STRUCTURE

INDEX OF SHEETS

SHEET NO.	TITLE
TMP-1	TITLE SHEET, VICINITY MAP, AND INDEX OF SHEETS
TMP-1A	LIST OF APPLICABLE ROADWAY STANDARD DRAWINGS, AND LEGEND
TMP-1B	TRANSPORTATION OPERATIONS PLAN: (MANAGEMENT STRATEGIES, GENERAL NOTES, AND LOCAL NOTES)
TMP-2	SPECIAL SIGN DESIGN
TMP-3	OFF-SITE DETOUR
TMP-4	ROAD CLOSURE DETAIL AND DETOUR SIGNS

SHEET NO.
TMP-1

17BP.8.R.133

PROJECT:

DOCUMENT NOT CONSIDERED FINAL UNLESS ALL SIGNATURES COMPLETED

WORK ZONE SAFETY & MOBILITY
"from the MOUNTAINS to the COAST"

PLANS PREPARED BY:
BRIAN A. WILES, PE
PROJECT MANAGER

NCDOT CONTACTS:
TIM WELCH, PE
DIV. 8 BRIDGE PROGRAM MANAGER

PLANS PREPARED FOR:
DIVISION OF HIGHWAYS
DIVISION 8
121 DOT Drive
Carthage, NC 28327

PLANS PREPARED BY:
CH ENGINEERING
3220 GLEN ROYAL RD, RALEIGH, NC 27617
TELE 919.788.0224 FAX 919.788.0232
NC LICENSE #P-0189

APPROVED: DocuSigned by: Brian A Wiles 5890D0FEA2E34DE...

DATE: 3/26/2020

SEAL

NORTH CAROLINA PROFESSIONAL SEAL 16689 ENGINEER BRIAN ALLEN WILES

11/27/2019
R:\Traffic\TrafficControl\TCP\Montgomery\23_TC_TMP_1.dgn
USERNAME=

DocuSign Envelope ID: D0B21936-B308-4A25-9E99-474E79CBE3E2

PROJ. REFERENCE NO.	SHEET NO.
17BP.8.R.133	TMP-1A

ROADWAY STANDARD DRAWINGS

THE FOLLOWING ROADWAY STANDARDS AS SHOWN IN "ROADWAY STANDARD DRAWINGS" - N.C. DEPARTMENT OF TRANSPORTATION - RALEIGH, N.C., DATED JANUARY 2018 ARE APPLICABLE TO THIS PROJECT AND BY REFERENCE HEREBY ARE CONSIDERED A PART OF THESE PLANS:

STD. NO.	TITLE
1101.03	TEMPORARY ROAD CLOSURES
1101.11	TRAFFIC CONTROL DESIGN TABLES
1110.01	STATIONARY WORK ZONE SIGNS
1145.01	BARRICADES
1205.01	PAVEMENT MARKINGS - LINE TYPES AND OFFSETS
1205.02	PAVEMENT MARKINGS - TWO-LANE AND MULTI-LANE ROADWAYS
1205.12	PAVEMENT MARKINGS - BRIDGES
1261.01	GUARDRAIL AND BARRIER DELINEATORS - INSTALLATION SPACING
1261.02	GUARDRAIL AND BARRIER DELINEATORS - TYPES AND MOUNTING
1262.01	GUARDRAIL END DELINEATION

LEGEND

GENERAL

EXIST. PVMT.

NORTH ARROW

PROPOSED PVMT.

TRAFFIC CONTROL DEVICES

BARRICADE (TYPE III)

TEMPORARY SIGNING

STATIONARY SIGN

FINAL PAVEMENT MARKING

PAINT PAVEMENT MARKING LINES (4")	6,760 LF
PERMANENT RAISED PAVEMENT MARKERS	20 EACH

CH ENGINEERING
3220 GLEN ROYAL RD. RALEIGH, NC 27617
TELE 919.788.0224 FAX 919.788.0232
NC LICENSE #P-0189

APPROVED: DocuSigned by: Brian A Wiles 8890D0FEA2E34DE...

DATE: 3/26/2020

SEAL

NORTH CAROLINA PROFESSIONAL SEAL 16689 ENGINEER BRIAN ALLEN WILES

DOCUMENT NOT CONSIDERED FINAL UNLESS ALL SIGNATURES COMPLETED

DIVISION OF HIGHWAYS · STATE OF NORTH CAROLINA · DEPARTMENT OF TRANSPORTATION · WORK ZONE TRAFFIC CONTROL

ROADWAY STANDARD DRAWINGS & LEGEND

11/27/2019
R:\Traffic\TrafficControl\TCP\Montgomery\23_TC_TMP_1A.dgn
USERNAME:

DocuSign Envelope ID: D0B21936-B308-4A25-9E99-474E79CBE3E2

PROJ. REFERENCE NO.	SHEET NO.
17BP.8.R.133	TMP-1B

MANAGEMENT STRATEGIES

-CLOSE SR 1557 (MORRIS ROAD) AND DETOUR TRAFFIC OFF-SITE

-MAINTAIN LOCAL ACCESS TO ALL RESIDENCES AND BUSINESSES BETWEEN CLOSURE POINTS AT ALL TIMES DURING CONSTRUCTION

LOCAL NOTES

1) NOTIFY THE ENGINEER AT LEAST 30 DAYS PRIOR TO ANY TRAFFIC PATTERN ALTERATION.

2) NOTIFY THE MONTGOMERY COUNTY SCHOOLS TRANSPORTATION OFFICE AT (910) 576-4281 OF THE BRIDGE REMOVAL 30 DAYS PRIOR TO ROAD CLOSURE.

3) NOTIFY THE MONTGOMERY COUNTY EMERGENCY MANAGEMENT AT (910) 576-4221 OF THE BRIDGE REMOVAL 30 DAYS PRIOR TO ROAD CLOSURE.

GENERAL NOTES

CHANGES MAY BE REQUIRED WHEN PHYSICAL DIMENSIONS IN THE DETAIL DRAWINGS, STANDARD DETAILS, AND ROADWAY DETAILS ARE NOT ATTAINABLE TO MEET FIELD CONDITIONS OR RESULT IN DUPLICATE OR UNDESIRED OVERLAPPING OF DEVICES. MODIFICATION MAY INCLUDE: MOVING, SUPPLEMENTING, COVERING, OR REMOVAL OF DEVICES AS DIRECTED BY THE ENGINEER.

THE FOLLOWING GENERAL NOTES APPLY AT ALL TIMES FOR THE DURATION OF THE CONSTRUCTION PROJECT EXCEPT WHEN OTHERWISE NOTED IN THE PLAN OR DIRECTED BY THE ENGINEER.

SIGNING

A) PROVIDE SIGNING AND DEVICES REQUIRED TO CLOSE THE ROAD ACCORDING TO THE ROADWAY STANDARD DRAWINGS AND TRANSPORTATION MANAGEMENT PLANS.

PROVIDE SIGNING REQUIRED FOR THE OFF-SITE DETOUR ROUTE AS SHOWN IN THE TRANSPORTATION MANAGEMENT PLANS.

B) COVER OR REMOVE ALL SIGNS AND DEVICES REQUIRED TO CLOSE THE ROAD WHEN ROAD CLOSURE IS NOT IN OPERATION.

COVER OR REMOVE ALL SIGNS REQUIRED FOR THE OFF-SITE DETOUR WHEN THE DETOUR IS NOT IN OPERATION.

C) ENSURE ALL NECESSARY SIGNING IS IN PLACE PRIOR TO ALTERING ANY TRAFFIC PATTERN.

PHASING

STEP 1) USING RSD 1101.03, SHEET 1 OF 9 AND TMP-4, CLOSE SR 1340 (OKEEWEMEE RD) AND DETOUR TRAFFIC OFF-SITE AS SHOWN ON TMP-3. MAINTAIN ACCESS TO ALL RESIDENCES AND BUSINESSES BETWEEN CLOSURE POINTS.

STEP 2) REMOVE THE EXISTING STRUCTURE.

STEP 3) CONSTRUCT THE PROPOSED STRUCTURE AND ROADWAY.

STEP 4) PLACE FINAL PAVEMENT MARKINGS.

STEP 5) OPEN SR 1340 (OKEEWEMEE RD) TO TRAFFIC AND REMOVE ALL WORK ZONE TRAFFIC CONTROL DEVICES.

CH ENGINEERING
3220 GLEN ROYAL RD. RALEIGH, NC 27617
TELE 919.788.0224 FAX 919.788.0232
NC LICENSE #P-0189

APPROVED: DocuSigned by: Brian A Wiles
89900DFEA2E34DE...
DATE: 3/26/2020
SEAL

NORTH CAROLINA PROFESSIONAL SEAL 16689 ENGINEER BRIAN ALLEN WILES

DOCUMENT NOT CONSIDERED FINAL UNLESS ALL SIGNATURES COMPLETED

DIVISION OF HIGHWAYS STATE OF NORTH CAROLINA DEPARTMENT OF TRANSPORTATION WORK ZONE TRAFFIC CONTROL

TRANSPORTATION OPERATIONS PLAN

11/27/2019
R:\Traffic\TrafficControl\TCP\Montgomery\23_TC_TMP_1B.dgn
USERNAME

DocuSign Envelope ID: D0B21936-B308-4A25-9E99-474E79CBE3E2

PROJ. REFERENCE NO.	SHEET NO.
17BP.8.R.133	TMP-2

SIGN NUMBER: SP-1
TYPE: STATIONARY
QUANTITY: SEE PLANS

SIGN WIDTH: 5′-0″
HEIGHT: 1′-6″
TOTAL AREA: 7.5 Sq.Ft.

BORDER TYPE: INSET
RECESS: 0.47″
WIDTH: 0.63″
RADII: 1.5″

NO. Z BARS:
LENGTH:

BACKG COLOR: Fluorescent Orange
COPY COLOR: Black

SYMBOL	X	Y	WID	HT

MAT′L: 0.080″ (2.0 mm) ALUMINUM

DESIGN BY: TAG
PROJECT ID: ID
CHECKED BY:
LOCATION:
Sep 23, 2019
DIV: DIV

USE NOTES: 1,2

1. Legend and border shall be direct applied black non-reflective sheeting.
2. Background shall be NC GRADE B fluorescent orange retroreflective sheeting.

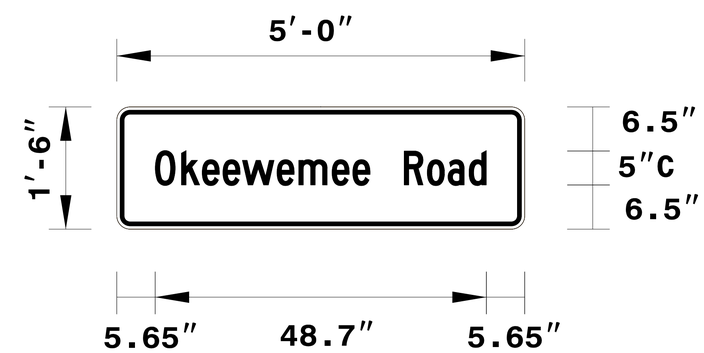

BORDER
R=1.5″
TH=0.63″
IN=0.47″

Spacing Factor is 1 unless specified otherwise

LETTER POSITIONS

Letter locations are panel edge to lower left corner

	O	k	e	e	w	e	m	e	e		R	o	a	d	Series/Size Text Length
	5.6	9.5	12.6	15.6	18.4	23.6	26.8	31.6	34.7	37.2	42.2	45.6	48.7	51.8	C 2000 / 48.7

FILENAME: SIGN DESIGNS - Work Zone_2

NORTH CAROLINA D.O.T. SIGN DETAIL

CH ENGINEERING
3220 GLEN ROYAL RD. RALEIGH, NC 27617
TELE 919.788.0224 FAX 919.788.0232
NC LICENSE #P-0189

APPROVED: DocuSigned by: Brian A Wiles 889DD0FEA2E34DE...
DATE: 3/26/2020
SEAL

NORTH CAROLINA PROFESSIONAL SEAL 16689 ENGINEER BRIAN ALLEN WILES

DOCUMENT NOT CONSIDERED FINAL UNLESS ALL SIGNATURES COMPLETED

DIVISION OF HIGHWAYS · STATE OF NORTH CAROLINA · DEPARTMENT OF TRANSPORTATION · WORK ZONE TRAFFIC CONTROL

SPECIAL SIGN DESIGN

2/27/2020
R:\Traffic\TrafficControl\TCP\Montgomery\23_TC_TMP_2.dgn
USERNAME:

DocuSign Envelope ID: D0B21936-B308-4A25-9E99-474E79CBE3E2

PROJ. REFERENCE NO.	SHEET NO.
17BP.8.R.133	TMP-3

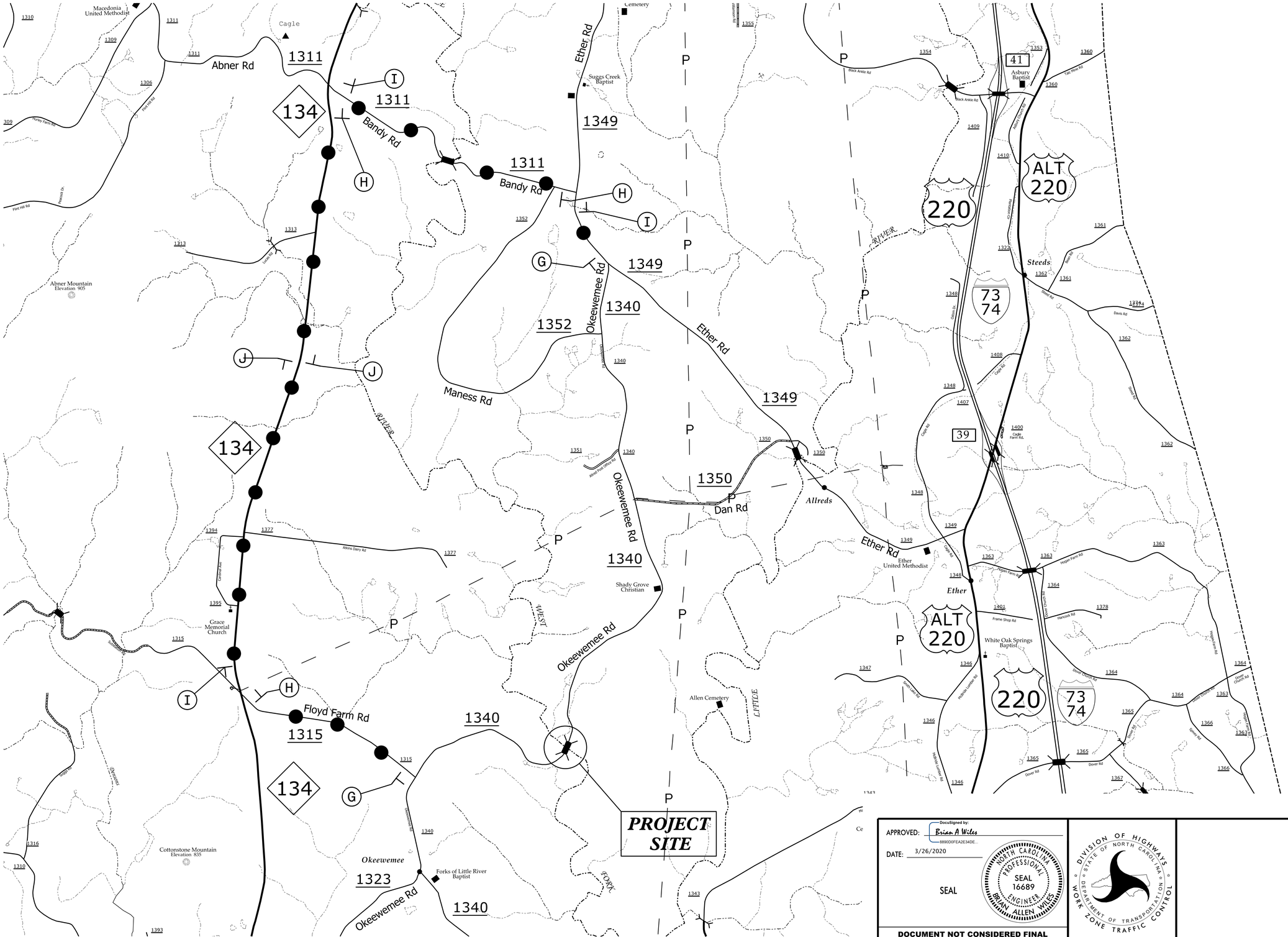

APPROVED: DocuSigned by: Brian A Wiles 889000FEA2E34DE...

DATE: 3/26/2020

SEAL

NORTH CAROLINA PROFESSIONAL ENGINEER SEAL 16689 BRIAN ALLEN WILES

DIVISION OF HIGHWAYS STATE OF NORTH CAROLINA DEPARTMENT OF TRANSPORTATION WORK ZONE TRAFFIC CONTROL

DOCUMENT NOT CONSIDERED FINAL UNLESS ALL SIGNATURES COMPLETED

11/27/2019
R:\Traffic\TrafficControl\TCP\Montgomery\23_TC_TMP_3.dgn
USERNAME:

DocuSign Envelope ID: D0B21936-B308-4A25-9E99-474E79CBE3E2

PROJ. REFERENCE NO.	SHEET NO.
17BP.8.R.133	TMP-4

INSET A

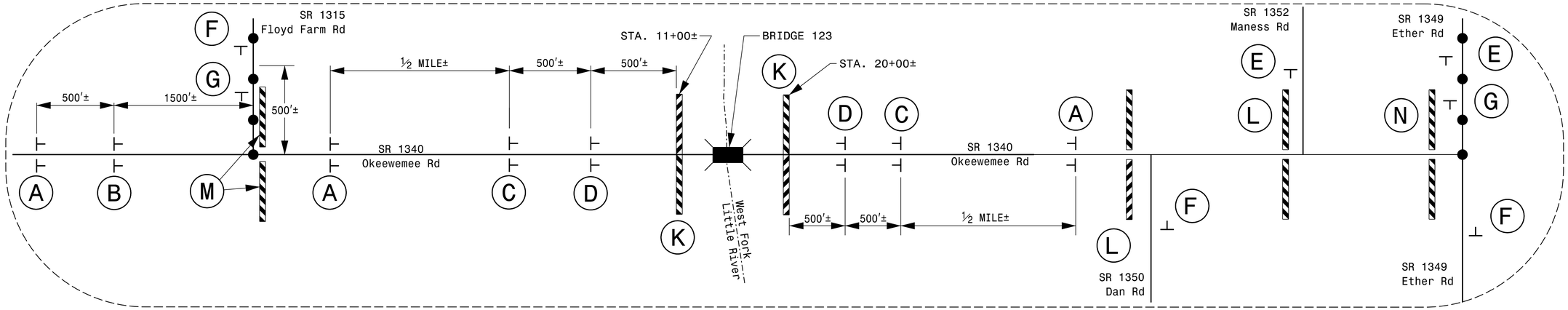

W20-3
48" X 48"

A

W20-2
48" X 48"

B

W20-3
48" X 48"

C

W20-3
48" X 48"

D

W20-3
48" X 48"

NEXT RIGHT

SP-4R
42" X 12"

E

W20-3
48" X 48"

NEXT LEFT

SP-4L
42" X 12"

F

END
DETOUR

M4-8 A
24" X 18"

G

Okeewemee Road

SP-1
60" X 18"

DETOUR

M4-8
24" X 12"

M6-1
21" X 15"

H

Okeewemee Road

SP-1
60" X 18"

DETOUR

M4-8
24" X 12"

M6-1 L
21" X 15"

I

Okeewemee Road

DETOUR

M4-8
24" X 12"

M6-3
21" X 15"

J

R11-2
48" x 30"

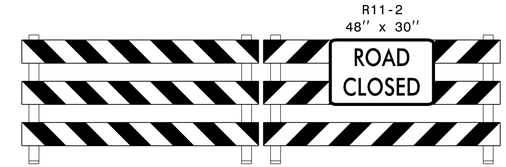

TYPE III BARRICADE(S)

K

R11-4
60" x 30"

TYPE III BARRICADE

L

R11-3A
60" x 30"

M4-10L
48" x 18"

TYPE III BARRICADE

M

R11-3
60" x 30"

M4-10R
48" x 18"

TYPE III BARRICADE

N

CH ENGINEERING
3220 GLEN ROYAL RD. RALEIGH, NC 27617
TELE 919.788.0224 FAX 919.788.0232
NC LICENSE #P-0189

APPROVED: DocuSigned by: Brian A Wiles 889000FEA2E34DE...

DATE: 3/26/2020

SEAL

NORTH CAROLINA PROFESSIONAL SEAL 16689 ENGINEER BRIAN ALLEN WILES

DOCUMENT NOT CONSIDERED FINAL UNLESS ALL SIGNATURES COMPLETED

DIVISION OF HIGHWAYS · STATE OF NORTH CAROLINA · DEPARTMENT OF TRANSPORTATION · WORK ZONE TRAFFIC CONTROL

ROAD CLOSURE DETAIL and DETOUR SIGNS

11/27/2019
R:\Traffic\TrafficControl\TCP\Montgomery\23_TC_TMP_4.dgn
USERNAME:

TIP PROJECT: 17BP.8.R.133

See Sheet 1A For Index of Sheets

STATE	STATE PROJECT REFERENCE NO.	SHEET NO.	TOTAL SHEETS
N.C.	17BP.8.R.133	EC-1	

STATE PROJ. NO.	F. A. PROJ. NO.	DESCRIPTION

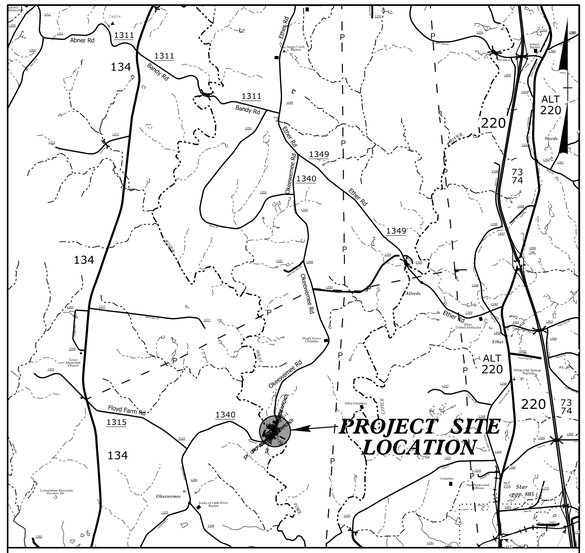

VICINITY MAP

N.T.S.

STATE OF NORTH CAROLINA
DIVISION OF HIGHWAYS

PLAN FOR PROPOSED
HIGHWAY EROSION CONTROL

MONTGOMERY COUNTY

LOCATION: BRIDGE 610123 OVER WEST FORK LITTLE RIVER ON SR 1340 (OKEEWEMEE ROAD)

TYPE OF WORK: GRADING, DRAINAGE, PAVING & STRUCTURE

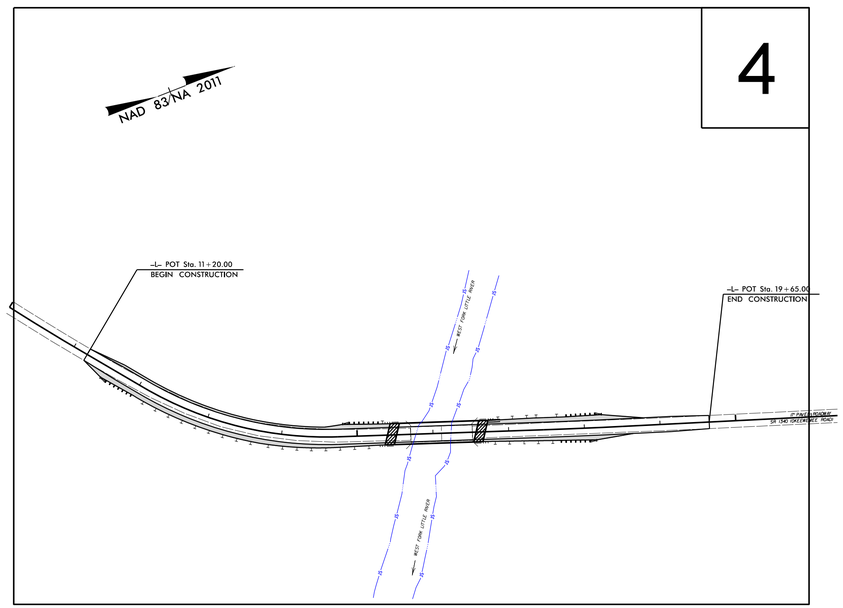

EROSION AND SEDIMENT CONTROL MEASURES

Std. #	Description	Symbol
1630.03	Temporary Silt Ditch	TSD
1630.05	Temporary Diversion	TD
1605.01	Temporary Silt Fence	
1606.01	Special Sediment Control Fence	
1622.01	Temporary Berms and Slope Drains	
1630.02	Silt Basin Type B	
1633.01	Temporary Rock Silt Check Type-A	
	Temporary Rock Silt Check Type-A with Matting and Polyacrylamide (PAM)	
1633.02	Temporary Rock Silt Check Type-B	
	Wattle/ Coir Fiber Wattle	EW CFW
	Wattle/ Coir Fiber Wattle with Polyacrylamide (PAM)	
1634.01	Temporary Rock Sediment Dam Type-A	
1634.02	Temporary Rock Sediment Dam Type-B	
1635.01	Rock Pipe Inlet Sediment Trap Type-A	
1635.02	Rock Pipe Inlet Sediment Trap Type-B	
1630.04	Stilling Basin	
1630.06	Special Stilling Basin	
	Rock Inlet Sediment Trap:	
1632.01	Type A	A
1632.02	Type B	B
1632.03	Type C	C
	Skimmer Basin	
	Tiered Skimmer Basin	
	Infiltration Basin	

THIS PROJECT CONTAINS EROSION CONTROL PLANS FOR CLEARING AND GRUBBING PHASE OF CONSTRUCTION.

GRAPHIC SCALE

0
PLANS

0
PROFILE (HORIZONTAL)

0
PROFILE (VERTICAL)

THESE EROSION AND SEDIMENT CONTROL PLANS COMPLY WITH THE REGULATIONS SET FORT BY THE NCG-010000 GENERAL CONSTRUCTION PERMIT EFFECTIVE AUGUST 1, 2016 AND ISSUED BY THE NORTH CAROLINA DEPARTMENT OF ENVIRONMENT AND NATURAL RESOURCES DIVISION OF WATER RESOURCES.

Prepared In the Office of:

MI ENGINEERING, PLLC

1011 SCHAUB DRIVE, SUITE 100
RALEIGH, NC 27606

Designed by:

WILLIAM K. JERNIGAN, JR., PE 3395

NAME *LEVEL III CERTIFICATION NO.*

Reviewed In the Office of:

ROADSIDE ENVIRONMENTAL UNIT

1 South Wilmington St.
Raleigh, NC 27611

2018 STANDARD SPECIFICATIONS

Reviewed by:

AARON HARPER, PE

Roadway Standard Drawings

The following roadway english standards as appear in "Roadway Standard Drawings"- Roadway Design Unit - N. C. Department of Transportation - Raleigh, N. C., dated January 2018 and the latest revison thereto are applicable to this project and by reference hereby are considered a part of these plans.

1604.01	Railroad Erosion Control Detail	1632.01	Rock Inlet Sediment Trap Type A
1605.01	Temporary Silt Fence	1632.02	Rock Inlet Sediment Trap Type B
1606.01	Special Sediment Control Fence	1632.03	Rock Inlet Sediment Trap Type C
1607.01	Gravel Construction Entrance	1633.01	Temporary Rock Silt Check Type A
1622.01	Temporary Berms and Slope Drains	1633.02	Temporary Rock Silt Check Type B
1630.01	Riser Basin	1634.01	Temporary Rock Sediment Dam Type A
1630.02	Silt Basin Type B	1634.02	Temporary Rock Sediment Dam Type B
1630.03	Temporary Silt Ditch	1635.01	Rock Pipe Inlet Sediment Trap Type A
1630.04	Stilling Basin	1635.02	Rock Pipe Inlet Sediment Trap Type B
1630.05	Temporary Diversion	1640.01	Coir Fiber Baffle
1630.06	Special Stilling Basin	1645.01	Temporary Stream Crossing
1631.01	Matting Installation		

07-MAR-2019 14:56
E:\Proj\17BP8R133_MONTGOMERY\Mon133_Hyd_EC_tsh.dgn
$$$$USERNAME$$$$

PROJECT REFERENCE NO.	SHEET NO.
17BP.8.R.133	EC-03
ROADWAY DESIGN ENGINEER	HYDRAULICS ENGINEER

DIVISION OF HIGHWAYS
STATE OF NORTH CAROLINA

SOIL STABILIZATION TIMEFRAMES

SITE DESCRIPTION	STABILIZATION TIME	TIMEFRAME EXCEPTIONS
PERIMETER DIKES, SWALES, DITCHES AND SLOPES	7 DAYS	NONE
HIGH QUALITY WATER (HQW) ZONES	7 DAYS	NONE
SLOPES STEEPER THAN 3:1	7 DAYS	IF SLOPES ARE 10' OR LESS IN LENGTH AND ARE NOT STEEPER THAN 2:1, 14 DAYS ARE ALLOWED.
SLOPES 3:1 OR FLATTER	14 DAYS	7 DAYS FOR SLOPES GREATER THAN 50' IN LENGTH.
ALL OTHER AREAS WITH SLOPES FLATTER THAN 4:1	14 DAYS	NONE, EXCEPT FOR PERIMETERS AND HQW ZONES.

PROJECT REFERENCE NO.	SHEET NO.
17BP.8.R.133	EC-3A
ROADWAY DESIGN ENGINEER	HYDRAULICS ENGINEER

DIVISION OF HIGHWAYS
STATE OF NORTH CAROLINA

SOIL STABILIZATION SUMMARY SHEET

MATTING FOR EROSION CONTROL

CONST SHEET NO.	LINE	FROM STATION	TO STATION	SIDE	ESTIMATE (SY)
4	-L-	11+50	15+00	LT	370
				SUBTOTAL	370
MISCELLANEOUS MATTING TO BE INSTALLED AS DIRECTED BY THE ENGINEER					280
				TOTAL	650
				SAY	700

MATTING FOR EROSION CONTROL

CONST SHEET NO.	LINE	FROM STATION	TO STATION	SIDE	ESTIMATE (SY)

CH ENGINEERING
3220 GLEN ROYAL RD. RALEIGH, NC 27617
TELE 919.788.0224 FAX 919.788.0232
NC LICENSE #P-0189

PROJECT REFERENCE NO.	SHEET NO.
17BP.8.R.33	EC-04/CONST.04
MONTGOMERY COUNTY BRIDGE #123	
ROADWAY DESIGN ENGINEER	HYDRAULICS ENGINEER

REVISIONS

8/17/99

-L-

PI Sta 10+61.32	PI Sta 13+43.93	PI Sta 17+98.44	PI Sta 22+29.55
Δ = 1° 41' 20.8" (LT)	Δ = 32° 21' 47.8" (LT)	Δ = 0° 56' 27.4" (LT)	Δ = 4° 15' 15.9" (LT)
D = 1° 56' 12.9"	D = 12° 03' 44.2"	D = 0° 54' 10.8"	D = 4° 52' 12.6"
L = 87.21'	L = 268.30'	L = 104.20'	L = 87.36'
T = 43.61'	T = 137.84'	T = 52.10'	T = 43.70'
R = 2,958.08'	R = 475.00'	R = 6,345.00'	R = 1,176.46'

NAD 83/NA 2011

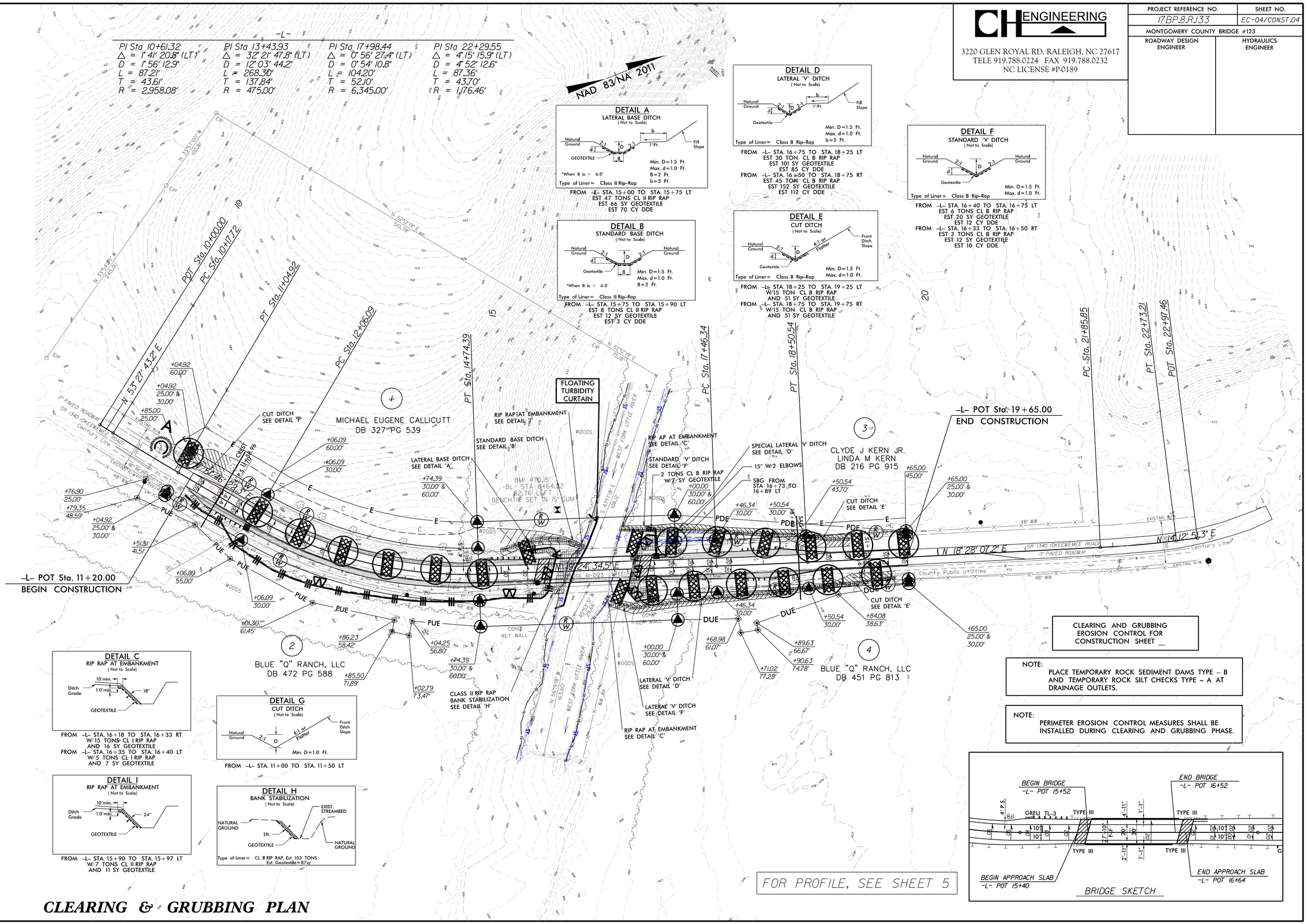

DETAIL A
LATERAL BASE DITCH
(Not to Scale)

Type of Liner= Class II Rip-Rap

FROM -L- STA. 15+00 TO STA. 15+75 LT
EST 47 TONS CL II RIP RAP
EST 66 SY GEOTEXTILE
EST 70 CY DDE

DETAIL B
STANDARD BASE DITCH
(Not to Scale)

Type of Liner= Class II Rip-Rap

FROM -L- STA. 15+75 TO STA. 15+90 LT
EST 8 TONS CL II RIP RAP
EST 12 SY GEOTEXTILE
EST 3 CY DDE

DETAIL D
LATERAL 'V' DITCH
(Not to Scale)

Type of Liner= Class B Rip-Rap

FROM -L- STA. 16+75 TO STA. 18+25 LT
EST 30 TON CL B RIP RAP
EST 101 SY GEOTEXTILE
EST 85 CY DDE
FROM -L- STA. 16+50 TO STA. 18+75 RT
EST 45 TON CL B RIP RAP
EST 152 SY GEOTEXTILE
EST 112 CY DDE

DETAIL E
CUT DITCH
(Not to Scale)

Type of Liner= Class B Rip-Rap

FROM -L- STA. 18+25 TO STA. 19+25 LT
W/15 TON CL B RIP RAP
AND 51 SY GEOTEXTILE
FROM -L- STA. 18+75 TO STA. 19+75 RT
W/15 TON CL B RIP RAP
AND 51 SY GEOTEXTILE

DETAIL F
STANDARD 'V' DITCH
(Not to Scale)

Type of Liner= Class B Rip-Rap

FROM -L- STA. 16+40 TO STA. 16+75 LT
EST 6 TONS CL B RIP RAP
EST 20 SY GEOTEXTILE
EST 12 CY DDE
FROM -L- STA. 16+33 TO STA. 16+50 RT
EST 3 TONS CL B RIP RAP
EST 12 SY GEOTEXTILE
EST 10 CY DDE

DETAIL C
RIP RAP AT EMBANKMENT
(Not to Scale)

FROM -L- STA. 16+18 TO STA. 16+33 RT
W/15 TONS CL I RIP RAP
AND 16 SY GEOTEXTILE
FROM -L- STA. 16+35 TO STA. 16+40 LT
W/5 TONS CL I RIP RAP
AND 7 SY GEOTEXTILE

DETAIL G
CUT DITCH
(Not to Scale)

FROM -L- STA. 11+00 TO STA. 11+50 LT

DETAIL I
RIP RAP AT EMBANKMENT
(Not to Scale)

FROM -L- STA. 15+90 TO STA. 15+97 LT
W/7 TONS CL II RIP RAP
AND 11 SY GEOTEXTILE

DETAIL H
BANK STABILIZATION
(Not to Scale)

Type of Liner= CL II RIP RAP, Est. 103 TONS
Est. Geotextile=87sy

CLEARING AND GRUBBING EROSION CONTROL FOR CONSTRUCTION SHEET __

NOTE:
PLACE TEMPORARY ROCK SEDIMENT DAMS TYPE – B AND TEMPORARY ROCK SILT CHECKS TYPE – A AT DRAINAGE OUTLETS.

NOTE:
PERIMETER EROSION CONTROL MEASURES SHALL BE INSTALLED DURING CLEARING AND GRUBBING PHASE.

BRIDGE SKETCH

FOR PROFILE, SEE SHEET 5

CLEARING & GRUBBING PLAN

04-DEC-2019 14:41
N:\NC_Hydro\M18004_CHE_BSR_Montgomery 123\Erosion Control\CADD\Mont123_EC_psh_04_fixed.dgn
$$$$USERNAME$$$$

CH ENGINEERING
3220 GLEN ROYAL RD. RALEIGH, NC 27617
TELE 919.788.0224 FAX 919.788.0232
NC LICENSE #P-0189

PROJECT REFERENCE NO.	SHEET NO.
17BP.8.R.133	EC-05/CONST.04
MONTGOMERY COUNTY BRIDGE #123	
ROADWAY DESIGN ENGINEER	HYDRAULICS ENGINEER

8/17/99

REVISIONS

-L-

PI Sta 10+61.32	PI Sta 13+43.93	PI Sta 17+98.44	PI Sta 22+29.55
Δ = 1° 41' 20.8" (LT)	Δ = 32° 21' 47.8" (LT)	Δ = 0° 56' 27.4" (LT)	Δ = 4° 15' 15.9" (LT)
D = 1° 56' 12.9"	D = 12° 03' 44.2"	D = 0° 54' 10.8"	D = 4° 52' 12.6"
L = 87.21'	L = 268.30'	L = 104.20'	L = 87.36'
T = 43.61'	T = 137.84'	T = 52.10'	T = 43.70'
R = 2,958.08'	R = 475.00'	R = 6,345.00'	R = 1,176.46'

NAD 83/NA 2011

Place Matting for Erosion Control on Slope as Work Allows. -L- Sta. 11+00 to Sta. 15+00 LT

Place Matting for Erosion Control on Slope as Work Allows. -L- Sta. 16+80 to Sta. 17+75 LT

Place Matting for Erosion Control on Slope as Work Allows. -L- Sta. 12+00 to Sta. 15+30 RT

Place Matting for Erosion Control on Slope as Work Allows. -L- Sta. 16+70 to Sta. 17+75 LT

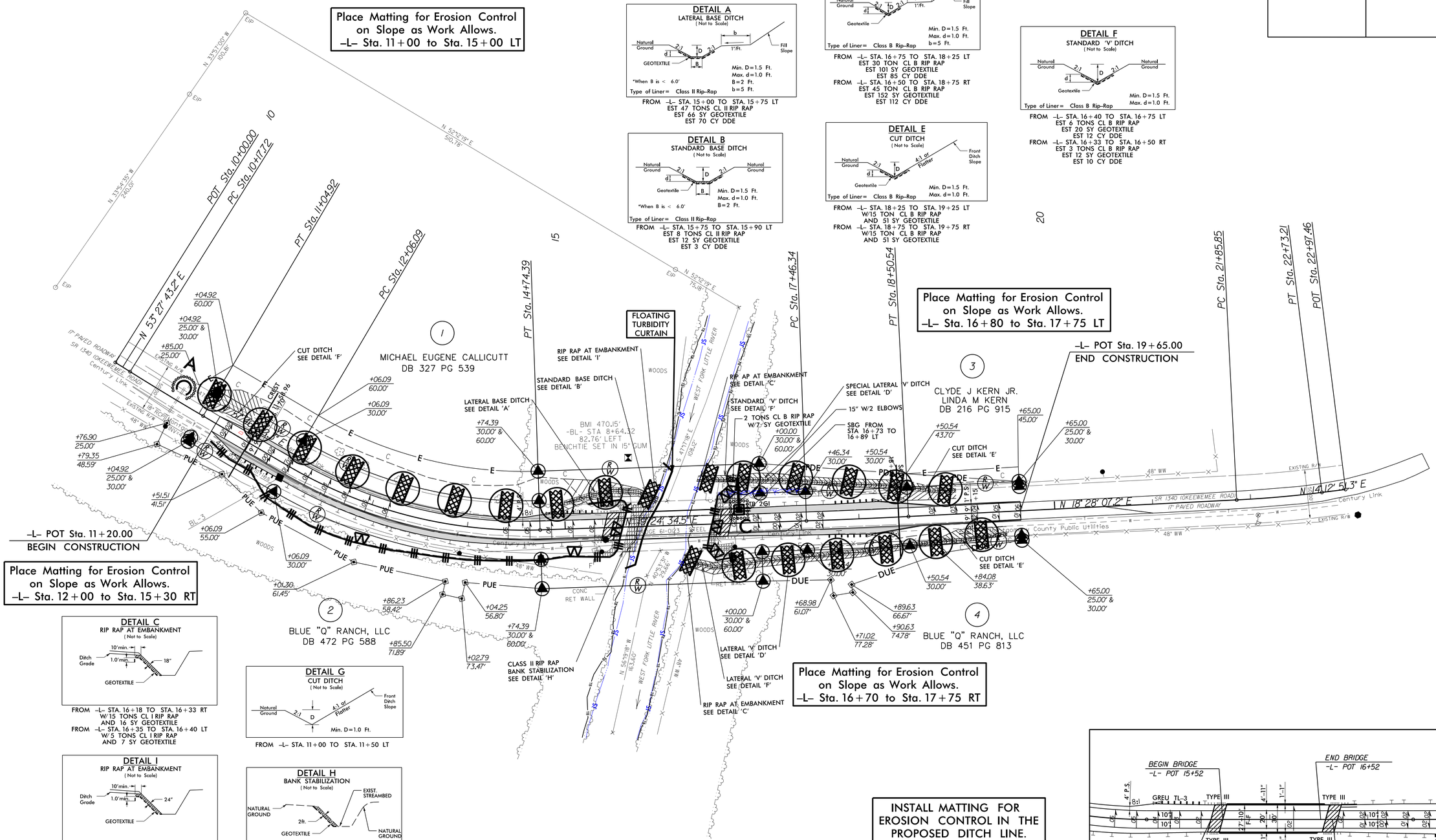

DETAIL A
LATERAL BASE DITCH
(Not to Scale)

FROM -L- STA. 15+00 TO STA. 15+75 LT
EST 47 TONS CL II RIP RAP
EST 66 SY GEOTEXTILE
EST 70 CY DDE

DETAIL B
STANDARD BASE DITCH
(Not to Scale)

FROM -L- STA. 15+75 TO STA. 15+90 LT
EST 8 TONS CL II RIP RAP
EST 12 SY GEOTEXTILE
EST 3 CY DDE

DETAIL C
RIP RAP AT EMBANKMENT
(Not to Scale)

FROM -L- STA. 16+18 TO STA. 16+33 RT
W/15 TONS CL I RIP RAP
AND 16 SY GEOTEXTILE
FROM -L- STA. 16+35 TO STA. 16+40 LT
W/5 TONS CL I RIP RAP
AND 7 SY GEOTEXTILE

DETAIL I
RIP RAP AT EMBANKMENT
(Not to Scale)

FROM -L- STA. 15+90 TO STA. 15+97 LT
W/7 TONS CL II RIP RAP
AND 11 SY GEOTEXTILE

DETAIL G
CUT DITCH
(Not to Scale)

FROM -L- STA. 11+00 TO STA. 11+50 LT

DETAIL H
BANK STABILIZATION
(Not to Scale)

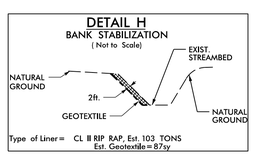

DETAIL D
LATERAL 'V' DITCH
(Not to Scale)

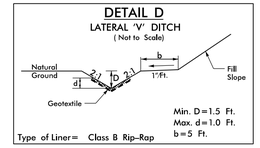

FROM -L- STA. 16+75 TO STA. 18+25 LT
EST 30 TON CL B RIP RAP
EST 101 SY GEOTEXTILE
EST 85 CY DDE
FROM -L- STA. 16+50 TO STA. 18+75 RT
EST 45 TON CL B RIP RAP
EST 152 SY GEOTEXTILE
EST 112 CY DDE

DETAIL E
CUT DITCH
(Not to Scale)

FROM -L- STA. 18+25 TO STA. 19+25 LT
W/15 TON CL B RIP RAP
AND 51 SY GEOTEXTILE
FROM -L- STA. 18+75 TO STA. 19+75 RT
W/15 TON CL B RIP RAP
AND 51 SY GEOTEXTILE

DETAIL F
STANDARD 'V' DITCH
(Not to Scale)

FROM -L- STA. 16+40 TO STA. 16+75 LT
EST 6 TONS CL B RIP RAP
EST 20 SY GEOTEXTILE
EST 12 CY DDE
FROM -L- STA. 16+33 TO STA. 16+50 RT
EST 3 TONS CL B RIP RAP
EST 12 SY GEOTEXTILE
EST 10 CY DDE

INSTALL MATTING FOR EROSION CONTROL IN THE PROPOSED DITCH LINE.

FOR PROFILE, SEE SHEET 5

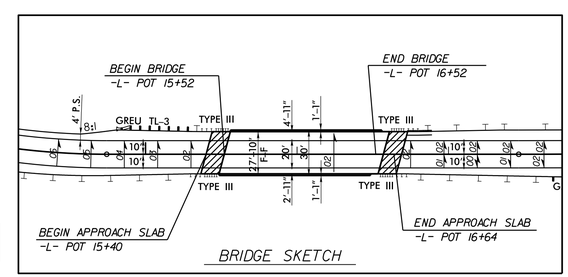

BRIDGE SKETCH

FINAL GRADE PLAN

04-DEC-2019 14:42
N:\NC_Highway\M16004_CHE_BSR_Montgomery 123\Erosion Control\CADD\Mont123_EC_psh_05.dgn
$$$$USERNAME$$$$

DocuSign Envelope ID: FBEB0857-F279-4CF4-A393-AB2CA0AA0959

PROJECT: 17BP.8.R.133

STATE OF NORTH CAROLINA
DIVISION OF HIGHWAYS

T.I.P. NO.	SHEET NO.
17BP.8.R.133	UC–1

MONTGOMERY COUNTY UTILITY CONSTRUCTION PLANS

LOCATION: BRIDGE 610123 OVER WEST FORK LITTLE RIVER ON SR 1340 (OKEEWEMEE ROAD)

TYPE OF WORK: WATER LINE RELOCATION

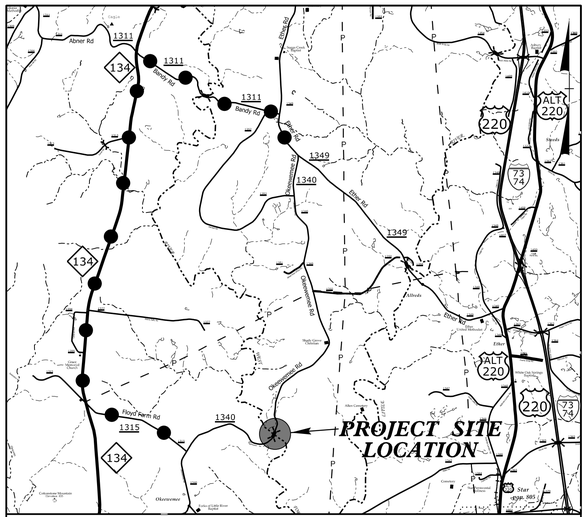

VICINITY MAP

OFF-SITE DETOUR ROUTE

N.T.S.

UC–4

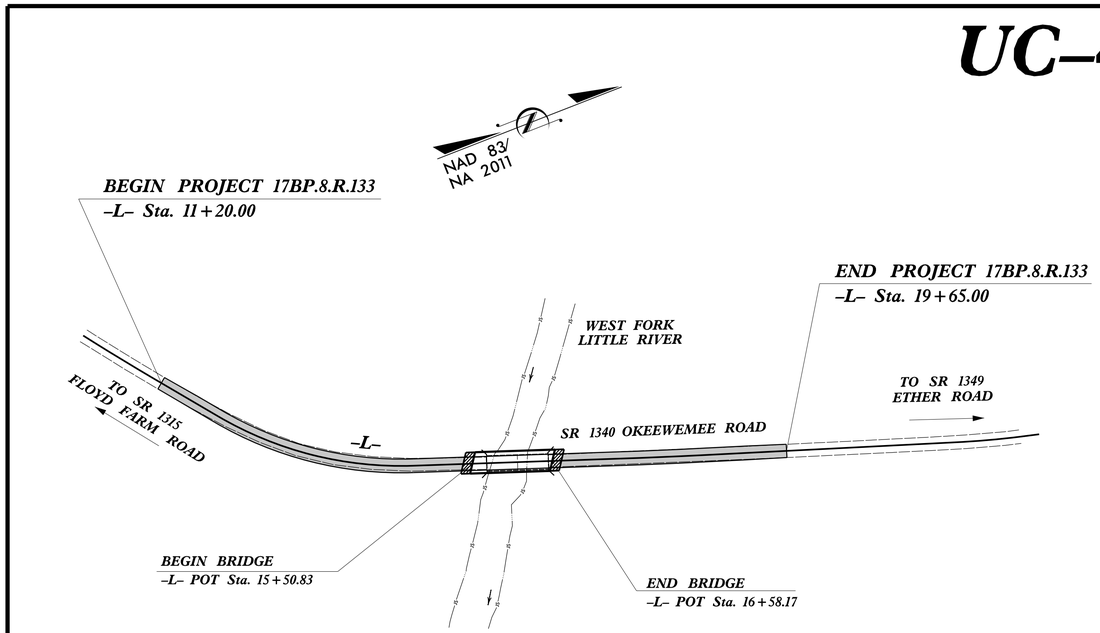

DOCUMENT NOT CONSIDERED FINAL UNLESS ALL SIGNATURES COMPLETED

GRAPHIC SCALES

50 25 0 50 100
PLANS

50 25 0 50 100
PROFILE (HORIZONTAL)

10 5 0 10 20
PROFILE (VERTICAL)

INDEX OF SHEETS

SHEET NO.:	DESCRIPTION:
UC–1	TITLE SHEET
UC–2	UTILITY SYMBOLOGY
UC–3	DETAILS
UC–4	UTILITY CONSTRUCTION SHEET
UC–5	PROFILE SHEET

WATER AND SEWER OWNERS ON PROJECT

(A) WATER MONTGOMERY COUNTY

PREPARED IN THE OFFICE OF

CH ENGINEERING
3220 GLEN ROYAL RD. RALEIGH, NC 27617
TELE 919.788.0224 FAX 919.788.0232
NC LICENSE #P-0189

ERIC TWEED, PE	CONSULTANT CONTACT #1
BRIAN WILES, PE	CONSULTANT CONTACT #2
MARY JO LEE, PE	CONSULTANT CONTACT #3

SEAL

NORTH CAROLINA PROFESSIONAL SEAL 028912 ENGINEER ERIC M TWEED

DocuSigned by: Eric Tweed 30DC2818183E4C0...

4/2/2019

DIVISION OF HIGHWAYS
DIVISION 8

121 DOT DR
CARTHAGE, NC 28327

BRANDON JONES, PE	DIVISION ENGINEER
TRAVIS MORGAN	UTILITIES ENGINEER
TIM WELCH, PE	DIV. TEAM LEAD
JAMIE YOW	DIV. UTILITIES COORDINATOR

4/2/2019
R:\Utilities\Engineering\UC\Proj\Mont123_ut_tsh_UC01_psh.dgn
USERNAME=

PROJECT REFERENCE NO.	SHEET NO.
17BP.8.RJ33	UC-2

STATE OF NORTH CAROLINA
DIVISION OF HIGHWAYS

UTILITIES PLAN SHEET SYMBOLS

PROPOSED WATER SYMBOLS

- Water Line (Sized as Shown) — 12" WL
- 11¼ Degree Bend
- 22½ Degree Bend
- 45 Degree Bend
- 90 Degree Bend
- Plug
- Tee
- Cross
- Reducer
- Gate Valve — GV
- Butterfly Valve — BV
- Tapping Valve — TGV
- Line Stop — LS
- Line Stop with Bypass — LS/BP
- Blow Off — BO
- Fire Hydrant — PFH
- Relocate Fire Hydrant — REH
- Remove Fire Hydrant — REM FH
- Water Meter — PWM
- Relocate Water Meter — RWM
- Remove Water Meter — REM WM
- Water Pump Station — PS(W)
- RPZ Backflow Preventer — PRPZ
- DCV Backflow Preventer — PBFP
- Relocate RPZ Backflow Preventer — RRPZ
- Relocate DCV Backflow Preventer — RBFP

PROPOSED SEWER SYMBOLS

- Gravity Sewer Line (Sized as Shown) — 12" SS
- Force Main Sewer Line (Sized as Shown) — 12" FSS
- Manhole (Sized per Note)
- Sewer Pump Station — PS(SS)

PROPOSED MISCELLANOUS UTILITIES SYMBOLS

- Power Pole
- Telephone Pole
- Joint Use Pole
- Telephone Pedestal — TEL PED
- Utility Line by Others (Type as Shown) — PROP O/H POW LINES
- Trenchless Installation — 12" TL INSTALL
- Encasement by Open Cut — 24" ENCAS BY OC
- Encasement — 24" ENCASEMENT
- Thrust Block
- Air Release Valve — AR
- Utility Vault — UV
- Concrete Pier — CP
- Steel Pier — SP
- Plan Note — NOTE
- Pay Item Note — PAY ITEM

EXISTING UTILITIES SYMBOLS

- Power Pole
- Telephone Pole
- Joint Use Pole
- Utility Pole
- Utility Pole with Base
- H-Frame Pole
- Power Transmission Line Tower
- Water Manhole
- Power Manhole
- Telephone Manhole
- Sanitary Sewer Manhole
- Hand Hole for Cable
- Power Transformer
- Telephone Pedestal
- CATV Pedestal
- Gas Valve
- Gas Meter
- Located Miscellaneous Utility Object
- Abandoned According to Utility Records — AATUR
- End of Information — E.O.I.
- *Underground Power Line
- *Underground Telephone Cable
- *Underground Telephone Conduit
- *Underground Fiber Optics Telephone Cable
- *Underground TV Cable
- *Underground Fiber Optics TV Cable
- *Underground Gas Pipeline
- Aboveground Gas Pipeline — A/G Gas
- *Underground Water Line
- Aboveground Water Line — A/G Water
- *Underground Gravity Sanitary Sewer Line — SS
- Aboveground Gravity Sanitary Sewer Line — A/G Sanitary Sewer
- *Underground SS Forced Main Line
- Underground Unknown Utility Line
- SUE Test Hole
- Water Meter
- Water Valve
- Fire Hydrant
- Sanitary Sewer Cleanout

*For Existing Utilities
- Utility Line Drawn from Record (Type as Shown)
- Designated Utility Line (Type as Shown)

REV: 2/1/2012

5/14/99
2/4/2019
Engineering\UC\Proj\Mont123_ut_sym_UC02_psh.dgn
USERNAME

DocuSign Envelope ID: FBEB0857-F279-4CF4-A393-AB2CA0AA0959

CH ENGINEERING
3220 GLEN ROYAL RD. RALEIGH, NC 27617
TELE 919.788.0224 FAX 919.788.0232
NC LICENSE #P-0189

PROJECT REFERENCE NO.	SHEET NO.
17BP.8.R.133	UC-3
DESIGNED BY: EMT	
DRAWN BY: EMT	
CHECKED BY: BAW	
APPROVED BY:	
REVISED:	
NORTH CAROLINA DEPARTMENT OF TRANSPORTATION	
UTILITIES ENGINEERING SEC. PHONE:(919)707-6690 FAX:(919)250-4151	UTILITY CONSTRUCTION PLANS ONLY

NORTH CAROLINA PROFESSIONAL SEAL 028912 ENGINEER ERIC M TWEED 4/2/2019
DocuSigned by: 30DC2B1B1B4B4B3...

UTILITY CONSTRUCTION

DOCUMENT NOT CONSIDERED FINAL UNLESS ALL SIGNATURES COMPLETED

PROJECT TYPICAL DETAILS

1. PROPOSED 6" WATER LINE FROM BETWEEN TIE-INS TO EXISTING AND CONNECTIONS TO 8" HDPE BORE SHALL BE D.I.R.J. (DUCTILE IRON RESTRAINED JOINT) PIPE.

2. MAKE FINAL CONNECTIONS OF THE NEW WORK TO THE EXISTING SYSTEM WHERE INDICATED ON THE PLANS, AS REQUIRED TO FIT THE ACTUAL CONDITIONS, OR AS DIRECTED.

3. CONTRACTOR'S ATTENTION IS DIRECTED TO SECTIONS 102, 107, AND 1550 OF THE STANDARD SPECIFICATIONS CONCERNING TRENCHLESS INSTALLATION. IT IS CONTRACTOR'S RESPONSIBILITY TO HAVE BORE DESIGNED AND SEALED BY A LICENSED NORTH CAROLINA PROFESSIONAL ENGINEER. NO DAMAGE IS ALLOWED TO RIVER, WETLANDS, OR BUFFER ZONES.

4. IF HDPE PIPE IS INSTALLED BY DIRECTIONAL DRILL. IT SHALL BE FILLED WITH WATER AND NOT BE CONNECTED TO ANY OTHER PIPE OR FITTINGS FOR ONE WEEK FROM THE TIME OF INSTALLATION.

5. THE PLANS DEPICT THE BEST AVAILABLE INFORMATION FOR THE LOCATION, SIZE, AND TYPE OF MATERIAL FOR ALL EXISTING UTILITIES. MAKE INVESTIGATIONS FOR DETERMINING THE EXACT LOCATION, SIZE, AND TYPE MATERIAL OF THE EXISTING FACILITIES AS NECESSARY FOR THE CONSTRUCTION OF THE PROPOSED UTILITIES AND FOR AVOIDING DAMAGE TO EXISTING FACILITIES. REPAIR ANY DAMAGE INCURRED TO EXISTING FACILITIES TO THE ORIGINAL OR BETTER CONDITION AT NO ADDITIONAL COST TO THE DEPARTMENT.

TRENCH DETAIL

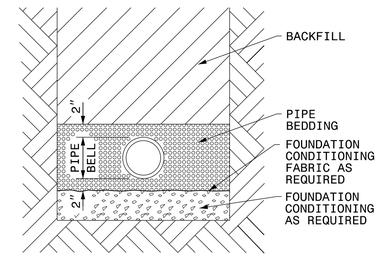

PLACE FOUNDATION CONDITIONING MATERIAL BELOW BEDDING IF REQUIRED, AS DIRECTED BY ENGINEER. PIPE BEDDED IN SELECT MATERIAL, CLASS II (TYPE 1) OR CLASS III. TRENCH BACKFILLED IN LOOSE 6" LAYERS COMPACTED TO TOP OF TRENCH USING LOCAL EXCAVATED MATERIAL IF APPROVED BY THE ENGINEER, OR SELECT MATERIAL. ALL MATERIAL SHALL BE FREE OF ROCKS, FOREIGN MATERIAL, AND FROZEN EARTH. COMPACTION SHALL BE TO APPROXIMATELY 95% DENSITY IN ACCORDANCE WITH AASHTO T-99 AS MODIFIED BY THE DEPARTMENT OF TRANSPORTATION.

NOTES:
1. CONTRACTOR TO TAKE CARE TO ENSURE INTEGRITY OF EXISTING PIPE PRIOR TO CONNECTION OF PROPOSED MODIFICATION.

2. CONTRACTOR MUST LOCATE ALL UNDERGROUND UTILITIES BEFORE COMMENCING WORK. IF ANY DISCREPANCIES FOUND ON PLANS CONTRACTOR MUST NOTIFY COUNTY AND ENGINEER.

3. THE CONTRACTOR SHALL COORDINATE ISOLATION OF THE EXISTING WATER MAIN FOR TIE-INS WITH MONTGOMERY COUNTY. CALL RONNIE CRUMP (910) 220-1778.

4. FLUSH PROPOSED MAIN AT 2.5 FPS VELOCITY AND PRESSURE TEST NEW MAIN AT MINIMUM 200 PSI FOR 2 HOURS PER NCDOT SPECIFICATIONS.

5. CONTRACTOR SHALL NOTIFY AND PROVIDE PROPER DOCUMENTATION TO THE UTILITY ENGINEER OF RECORD AND OWNER OF SATISFACTORY PRESSURE TEST AND BACTERALOGICAL SAMPLING. UPON MONTGOMERY COUNTY RECEIVING FINAL APPROVAL FROM THE PWSS, THE CONTRACTOR MAY PLACE THE NEW LINE IN SERVICE BY COORDINATING AND EXECUTING THE TIE-INS. MAKE TIE-INS BY ABANDONING EXISTING MAIN AND CONNECTING RESTRAINED JOINT BEND WITH CONCRETE THRUST BLOCK PER DETAIL. CONCRETE SHALL BE POURED A MINIMUM 24 HOURS BEFORE MAKING CONNECTION.

6. CONTRACTOR SHALL INSTALL, PRESSURE TEST, AND DISINFECT AS MUCH NEW LINE AS PHYSICALLY POSSIBLE BEFORE EXECUTING TIE-INS. PRIOR APPROVAL FROM THE ENGINEER & MONTGOMERY COUNTY IS REQUIRED IF MORE THAN 5 FEET OF PIPE AND FITTINGS BEYOND TESTED PORTION IS NEEDED FOR TIE-IN. TIE-IN SECTION WILL REQUIRE VISUAL LEAK TESTING AND DISINFECTION BY SWABBING.

7. TRANSITION FITTING TO BE RATED AT 350 PSI. CONTRACTOR TO PROVIDE DIP TO PVC TRANSITION FITTING SPEC SHEET TO MONTGOMERY COUNTY FOR APPROVAL PRIOR TO INSTALLATION.

8. THE CONTRACTOR SHALL RESTRAIN FITTINGS AND PIPE.

9. COVER OVER PIPE AT STREAM CROSSING SHALL BE 5' MIN BELOW STREAM BOTTOM TO TOP OF PIPE.

10. AN NCDOT OR MONTGOMERY COUNTY REPRESENTATIVE SHALL BE PRESENT FOR ALL TESTS.

11. CONTRACTOR SHALL COORDINATE WATER LINE INSTALLATION AND CONNECTION WITH MONTGOMERY COUNTY. EXISTING WATER LINE SHALL REMAIN IN SERVICE UNTIL BORE, TESTING AND DISINFECTION OF NEW WATER LINE IS COMPLETE.

12. IF TEMPORARY SHUT DOWN IS REQUIRED, THE CONTRACTOR SHALL COORDINATE THIS SHUT DOWN WITH MONTGOMERY COUNTY IN A MANNER THAT IS MOST CONVENIENT FOR CUSTOMERS AND THE COUNTY.

13. INSTALL NCDOT STANDARD VALVE BOX AND MARKER ON ALL VALVES.

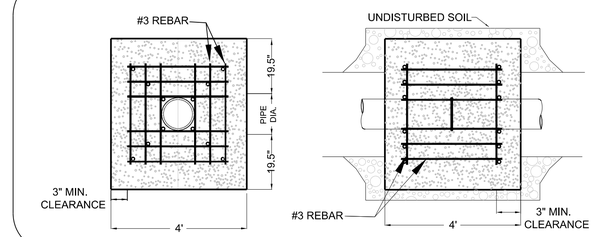

Sp = P x [(Dr - 1)/2]
Sp = 200 x [(11-1)/2]
Sp = 1000 psi

Poisson Effect Pullout Calculation
F=Sp x μ x π x Dm² x [1/Dr - 1/Dr²]
F=1000 x 0.45 x 3.14 x 8.528² x [1/11 - 1/11²]
F = 8,497 lbs

Concrete Weight Calculation
[LxWxH - PipeVolume] x Density = Wt
[4 x 4 x 4 - 3.14 x 0.355² x 4] x 145 lbs/CuFt = Wt
Wt = 9,206 lbs

NOTES:
1. CONCRETE SHALL BE 3000 PSI AND TRANSIT MIXED.
2. REINFORCING BARS SHALL BE DEFORMED AND TIED TOGETHER.
3. BACKFILL TAMPED IN 8" LIFTS.
4. FITTINGS AND PIPE SHALL BE WRAPPED IN 6 MIL PLASTIC SHEETING PRIOR TO PLACING CONCRETE.

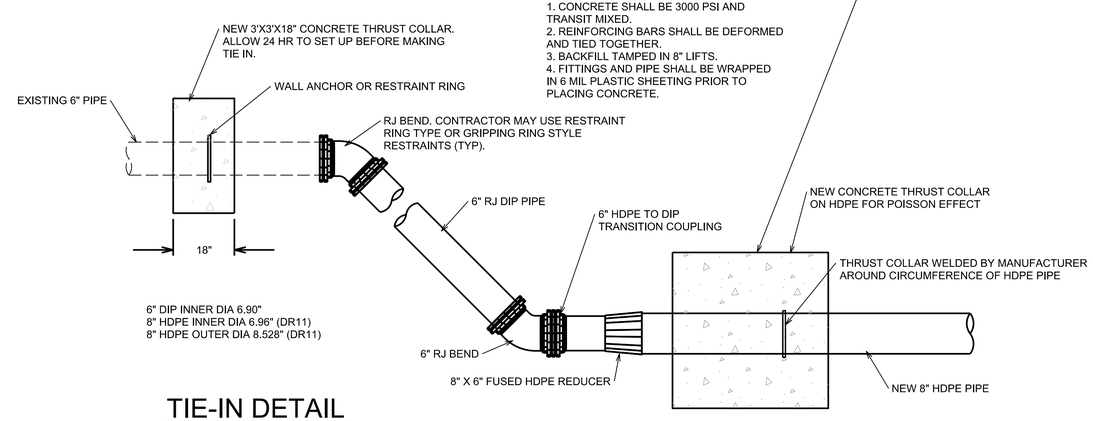

TIE-IN DETAIL

NO SCALE

5/14/99
4/2/2019
ties\Engineering\UC\Proj\Mont123_ut_notes_UC03_psh.dgn

DocuSign Envelope ID: AB167BED-91A7-47A8-85AB-726D6BB355BF

CH ENGINEERING
3220 GLEN ROYAL RD. RALEIGH, NC 27617
TELE 919.788.0224 FAX 919.788.0232
NC LICENSE #P-0189

PROJECT REFERENCE NO.	SHEET NO.
17BP.8.R.133	UC-4

DESIGNED BY: EMT
DRAWN BY: EMT
CHECKED BY: BAW
APPROVED BY:
REVISED:

NORTH CAROLINA DEPARTMENT OF TRANSPORTATION
UTILITIES ENGINEERING SEC.
PHONE:(919)707-6690
FAX:(919)250-4151

NORTH CAROLINA PROFESSIONAL SEAL 028912 ENGINEER ERIC M TWEED
6/21/2019
UTILITY CONSTRUCTION PLANS ONLY

UTILITY CONSTRUCTION

DOCUMENT NOT CONSIDERED FINAL UNLESS ALL SIGNATURES COMPLETED

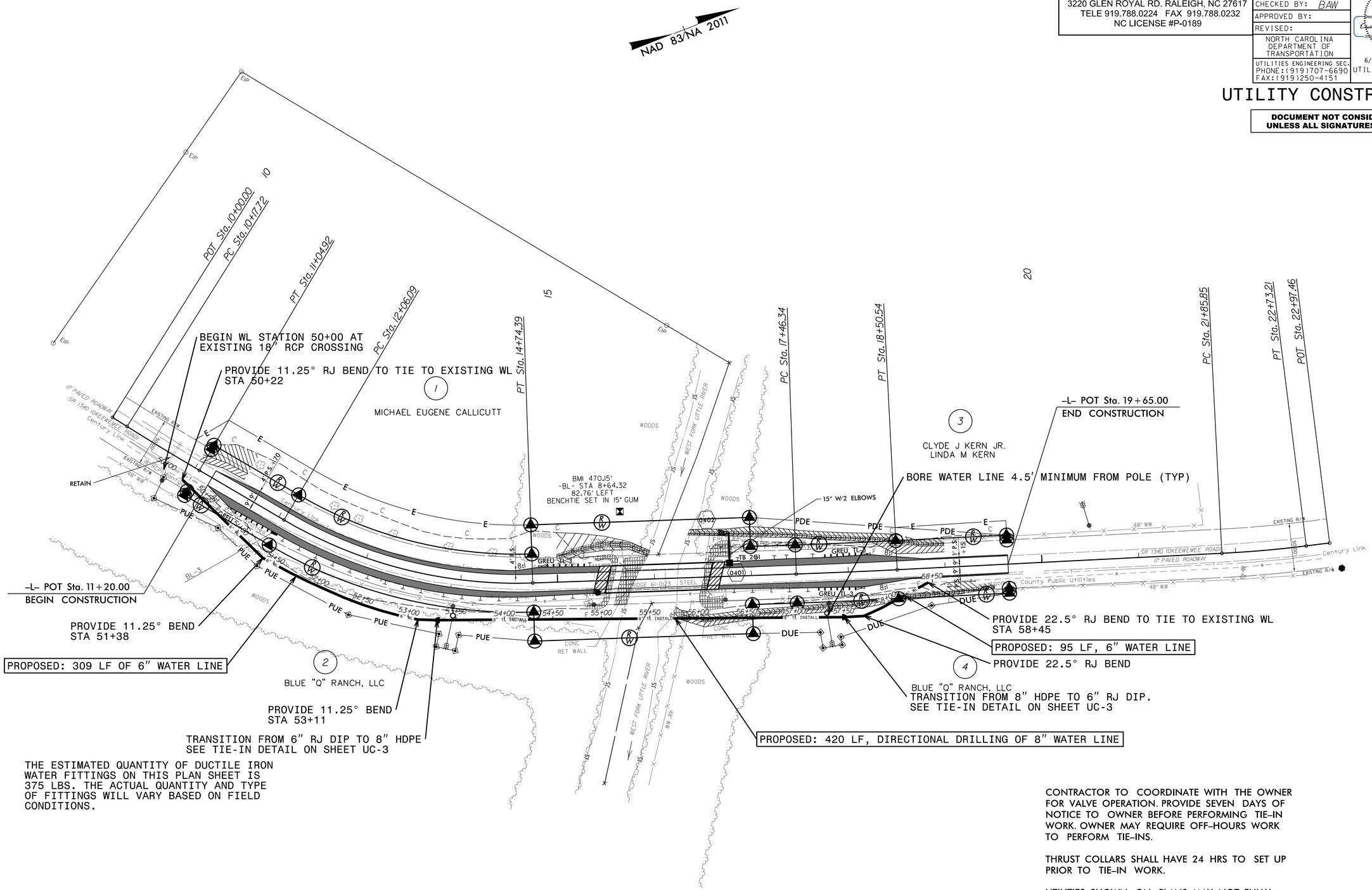

THE ESTIMATED QUANTITY OF DUCTILE IRON WATER FITTINGS ON THIS PLAN SHEET IS 375 LBS. THE ACTUAL QUANTITY AND TYPE OF FITTINGS WILL VARY BASED ON FIELD CONDITIONS.

CONTRACTOR TO COORDINATE WITH THE OWNER FOR VALVE OPERATION. PROVIDE SEVEN DAYS OF NOTICE TO OWNER BEFORE PERFORMING TIE-IN WORK. OWNER MAY REQUIRE OFF-HOURS WORK TO PERFORM TIE-INS.

THRUST COLLARS SHALL HAVE 24 HRS TO SET UP PRIOR TO TIE-IN WORK.

UTILITIES SHOWN ON PLANS MAY NOT FULLY ENCOMPASS ALL UTILITIES THAT ARE ON SITE. CONTRACTOR SHALL BE RESPONSIBLE FOR VERIFYING UTILITIES PRIOR TO CONSTRUCTION.

REVISIONS

8/17/99

4/3/2019
R:\Utilities\Engineering\UC\Proj\Mont123_ut_rdy04_UC04_psh.dgn
USERNAME

DocuSign Envelope ID: FBEB0857-F279-4CF4-A393-AB2CA0AA0959

CH ENGINEERING
3220 GLEN ROYAL RD. RALEIGH, NC 27617
TELE 919.788.0224 FAX 919.788.0232
NC LICENSE #P-0189

PROJECT REFERENCE NO.	SHEET NO.
17BP.8.R.133	UC-5

DESIGNED BY: EMT
DRAWN BY: EMT
CHECKED BY: BAW
APPROVED BY:
REVISED:

NORTH CAROLINA DEPARTMENT OF TRANSPORTATION
UTILITIES ENGINEERING SEC.
PHONE:(919)707-6690
FAX:(919)250-4151

NORTH CAROLINA PROFESSIONAL SEAL 028912 ENGINEER ERIC M. TWEED
DocuSigned by: 30DC028181B4...
4/2/2019
UTILITY CONSTRUCTION PLANS ONLY

UTILITY CONSTRUCTION

DOCUMENT NOT CONSIDERED FINAL UNLESS ALL SIGNATURES COMPLETED

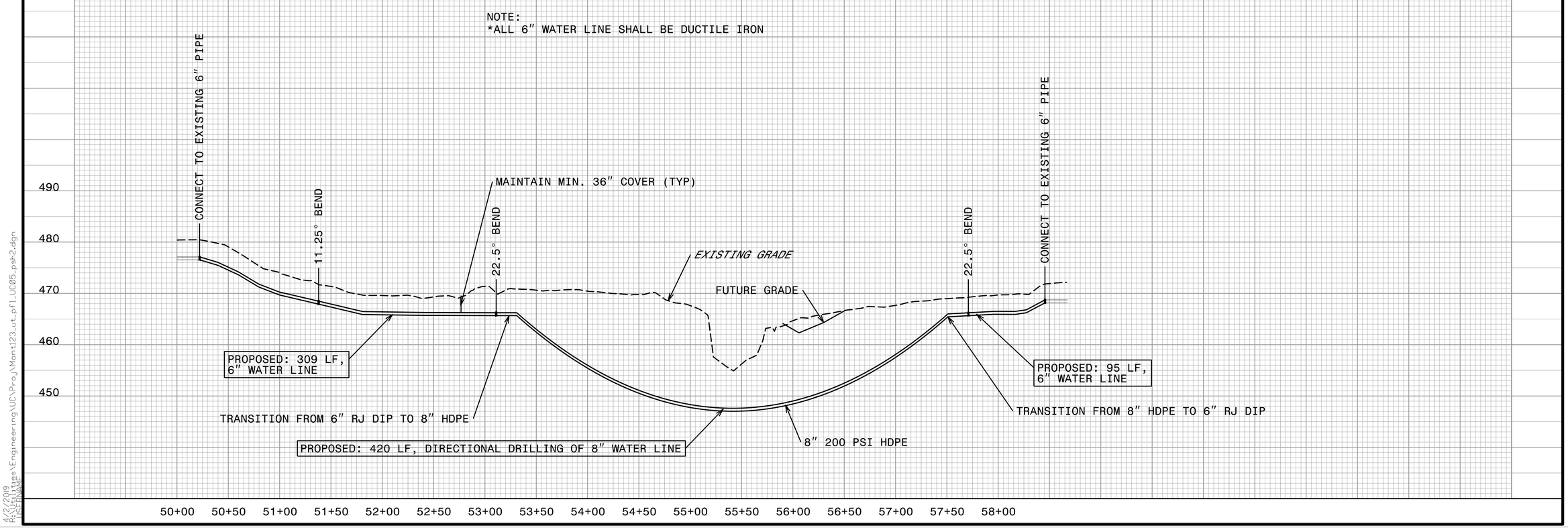

5/14/99

4/2/2019
R:\Utilities\Engineering\UC\Proj\Mont123_ut_pfl_UC05_psh2.dgn
USERNAME

TIP PROJECT: 17BP.8.R.133

T.I.P. NO.	SHEET NO.
17BP.8.R.133	UO–1

NOTE:
ALL UTILITY WORK SHOWN ON THIS SHEET WILL BE DONE BY OTHERS. NO PAYMENT WILL BE MADE TO THE CONTRACTOR FOR UTILITY WORK SHOWN ON THIS SHEET.

STATE OF NORTH CAROLINA
DIVISION OF HIGHWAYS

UTILITIES BY OTHERS PLANS
MONTGOMERY COUNTY

LOCATION: BRIDGE 610123 OVER WEST FORK LITTLE RIVER ON SR 1340 (OKEEWEMEE ROAD)

TYPE OF WORK: POWER AND COMMUNICATION RELOCATION

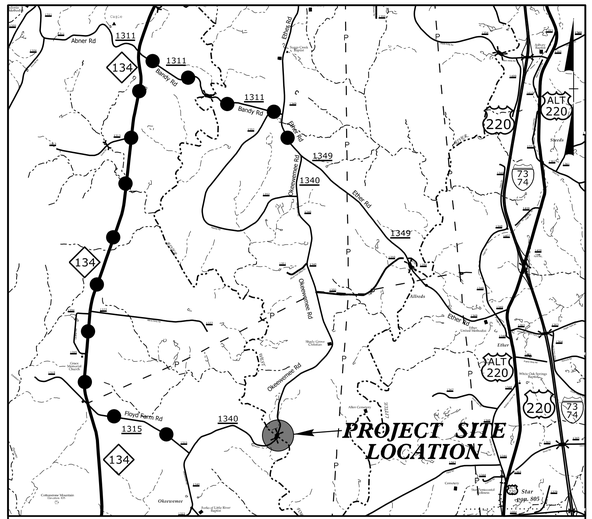

VICINITY MAP
OFF-SITE DETOUR ROUTE
N.T.S.

UO–2
RDY–04

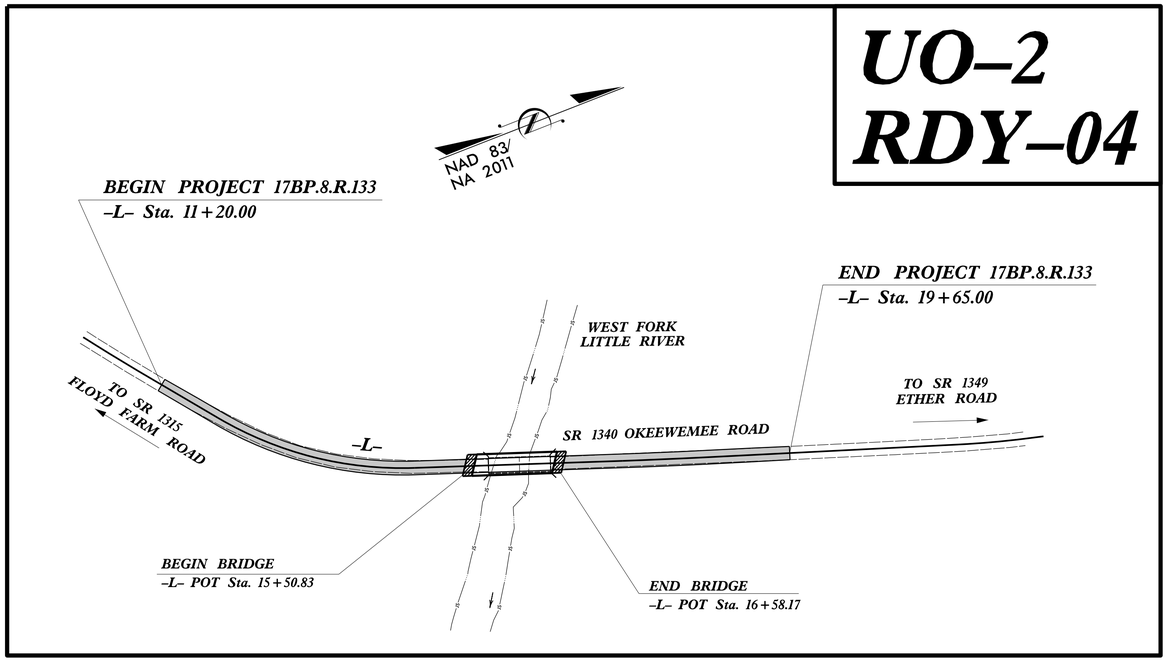

GRAPHIC SCALES

50 25 0 50 100
PLANS

50 25 0 50 100
PROFILE (HORIZONTAL)

10 5 0 10 20
PROFILE (VERTICAL)

INDEX OF SHEETS

SHEET NO.:	DESCRIPTION:
UO–1	TITLE SHEET
UO–2	UBO PLAN SHEET

UTILITY OWNERS WITH CONFLICTS

(A) POWER – REMC
(B) COMMUNICATIONS – CENTURYLINK

PREPARED IN THE OFFICE OF:
CH ENGINEERING
3220 GLEN ROYAL RD. RALEIGH, NC 27617
TELE 919.788.0224 FAX 919.788.0232
NC LICENSE #P-0189

UTILITIES PROJECT ENGINEER
Mary Jo Lee, P.E.

DIVISION OF HIGHWAYS
DIVISION 8
121 DOT DRIVE
CARTHAGE, NC 28327

JAMIE YOW	DIVISION CONTACT #1
TRAVIS MORGAN, PE	DIVISION CONTACT #2
TIM WELCH, PE	DIVISION CONTACT #3
	DIVISION CONTACT #4

09/08/99
2/28/2020
R:\Utilities\Engineering\UBO\Proj\Mont123_ut_tsh_U001_psh.dgn
USERNAME

PROJECT REFERENCE NO.	SHEET NO.
17BP.8.R.133	U0-2
THIS SHEET CORRESPONDS TO RDY- 04	

UTILITIES BY OTHERS

ALL PROPOSED UTILITY WORK SHOWN ON THIS SHEET WILL BE DONE BY OTHERS. NO PAYMENT WILL BE MADE TO THE CONTRACTOR FOR PROPOSED UTILITY WORK SHOWN ON THIS SHEET.

CH ENGINEERING
3220 GLEN ROYAL RD. RALEIGH, NC 27617
TELE 919.788.0224 FAX 919.788.0232
NC LICENSE #P-0189

-L-

PI Sta 10+61.32	PI Sta 13+43.93	PI Sta 17+98.44	PI Sta 22+29.55
Δ = 1° 41' 20.8" (LT)	Δ = 32° 21' 47.8" (LT)	Δ = 0° 56' 27.4" (LT)	Δ = 4° 15' 15.9" (LT)
D = 1° 56' 12.9"	D = 12° 03' 44.2"	D = 0° 54' 10.8"	D = 4° 52' 12.6"
L = 87.21'	L = 268.30'	L = 104.20'	L = 87.36'
T = 43.61'	T = 137.84'	T = 52.10'	T = 43.70'
R = 2,958.08'	R = 475.00'	R = 6,345.00'	R = 1,176.46'

NAD 83/NA 2011

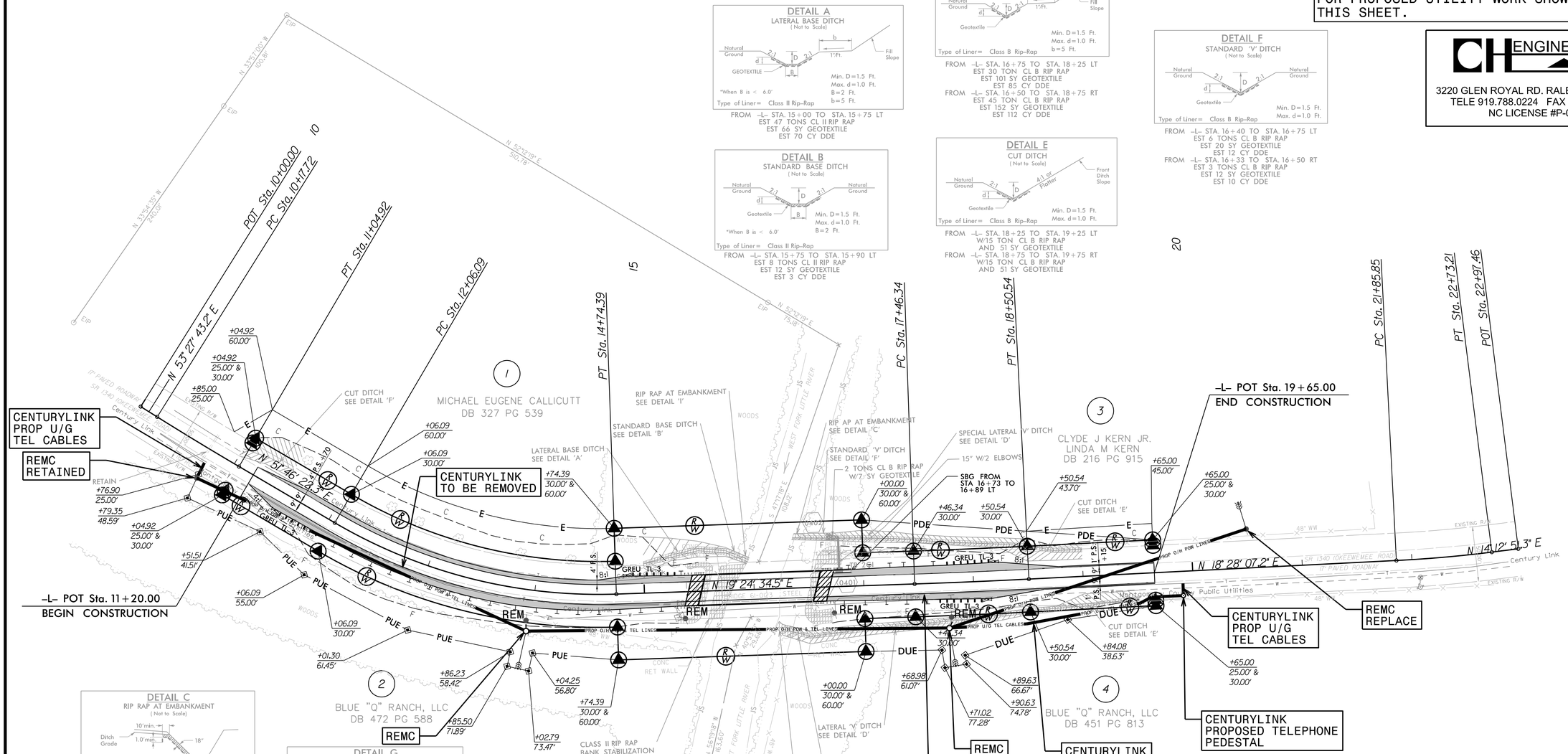

DETAIL A
LATERAL BASE DITCH
(Not to Scale)

FROM -L- STA. 15+00 TO STA. 15+75 LT
EST 47 TONS CL II RIP RAP
EST 66 SY GEOTEXTILE
EST 70 CY DDE

DETAIL B
STANDARD BASE DITCH
(Not to Scale)

FROM -L- STA. 15+75 TO STA. 15+90 LT
EST 8 TONS CL II RIP RAP
EST 12 SY GEOTEXTILE
EST 3 CY DDE

DETAIL D
LATERAL 'V' DITCH
(Not to Scale)

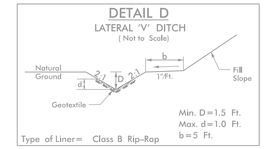

FROM -L- STA. 16+75 TO STA. 18+25 LT
EST 30 TON CL B RIP RAP
EST 101 SY GEOTEXTILE
EST 85 CY DDE
FROM -L- STA. 16+50 TO STA. 18+75 RT
EST 45 TON CL B RIP RAP
EST 152 SY GEOTEXTILE
EST 112 CY DDE

DETAIL E
CUT DITCH
(Not to Scale)

FROM -L- STA. 18+25 TO STA. 19+25 LT
W/15 TON CL B RIP RAP
AND 51 SY GEOTEXTILE
FROM -L- STA. 18+75 TO STA. 19+75 RT
W/15 TON CL B RIP RAP
AND 51 SY GEOTEXTILE

DETAIL F
STANDARD 'V' DITCH
(Not to Scale)

FROM -L- STA. 16+40 TO STA. 16+75 LT
EST 6 TONS CL B RIP RAP
EST 20 SY GEOTEXTILE
EST 12 CY DDE
FROM -L- STA. 16+33 TO STA. 16+50 RT
EST 3 TONS CL B RIP RAP
EST 12 SY GEOTEXTILE
EST 10 CY DDE

DETAIL C
RIP RAP AT EMBANKMENT
(Not to Scale)

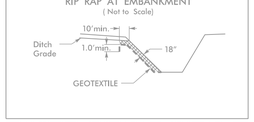

FROM -L- STA. 16+18 TO STA. 16+33 RT
W/15 TONS CL I RIP RAP
AND 16 SY GEOTEXTILE
FROM -L- STA. 16+35 TO STA. 16+40 LT
W/5 TONS CL I RIP RAP
AND 7 SY GEOTEXTILE

DETAIL G
CUT DITCH
(Not to Scale)

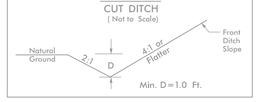

FROM -L- STA. 11+00 TO STA. 11+50 LT

DETAIL I
RIP RAP AT EMBANKMENT
(Not to Scale)

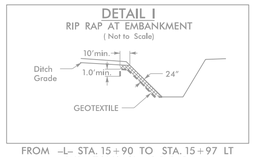

FROM -L- STA. 15+90 TO STA. 15+97 LT
W/7 TONS CL II RIP RAP
AND 11 SY GEOTEXTILE

DETAIL H
BANK STABILIZATION
(Not to Scale)

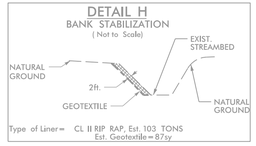

Type of Liner= CL II RIP RAP, Est. 103 TONS
Est. Geotextile=87sy

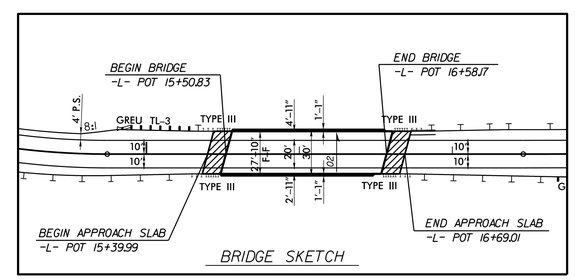

BRIDGE SKETCH

5/14/99

2/28/2020
R:\Utilities\Engineering\UB0\Proj\Mont123_ut_rdg04_U002_psh.dgn

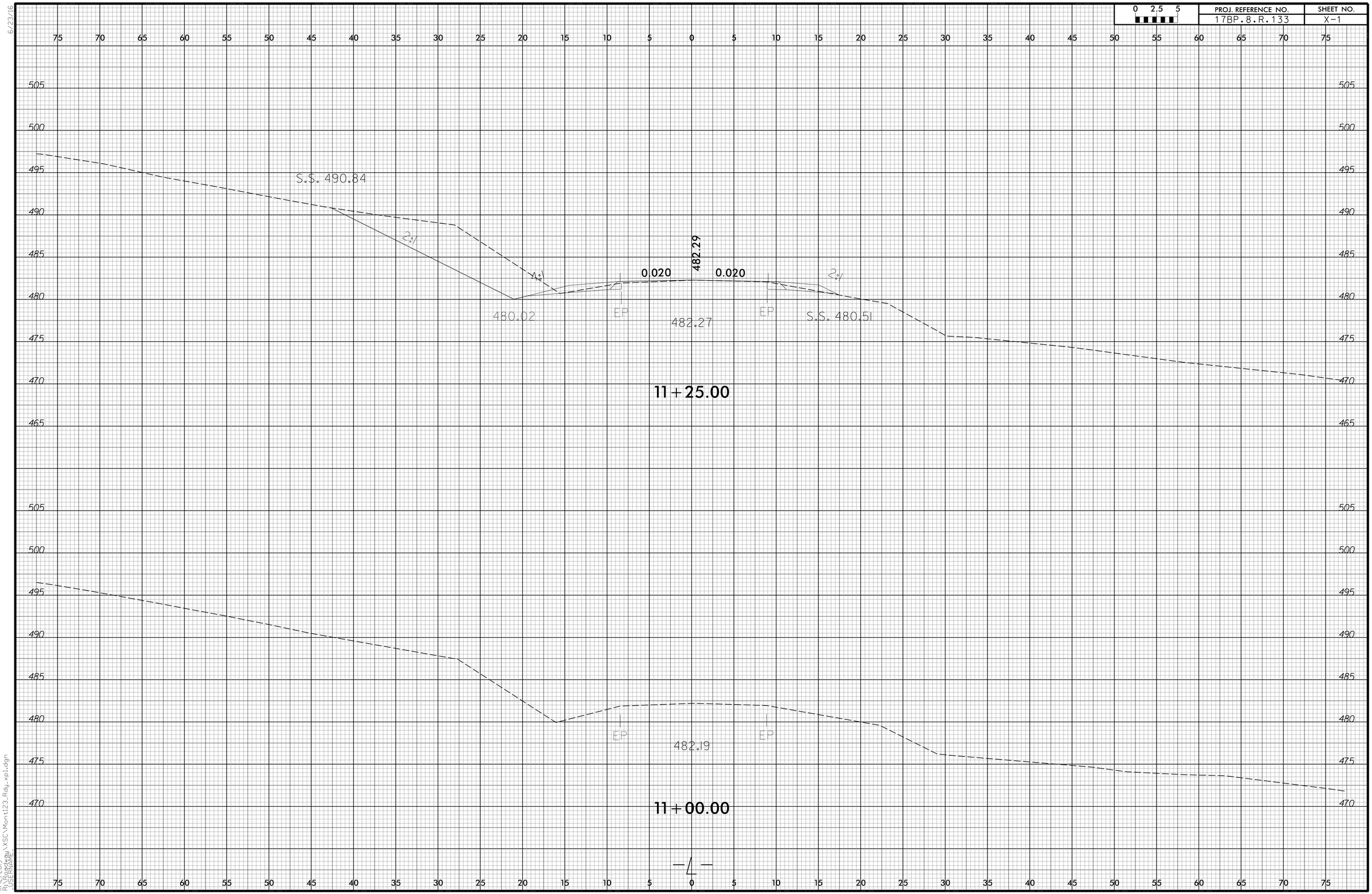

6/23/16

11/12/2019
R:\Roadway\XSC\Mont123_Rdy_xpl.dgn
USERNAME

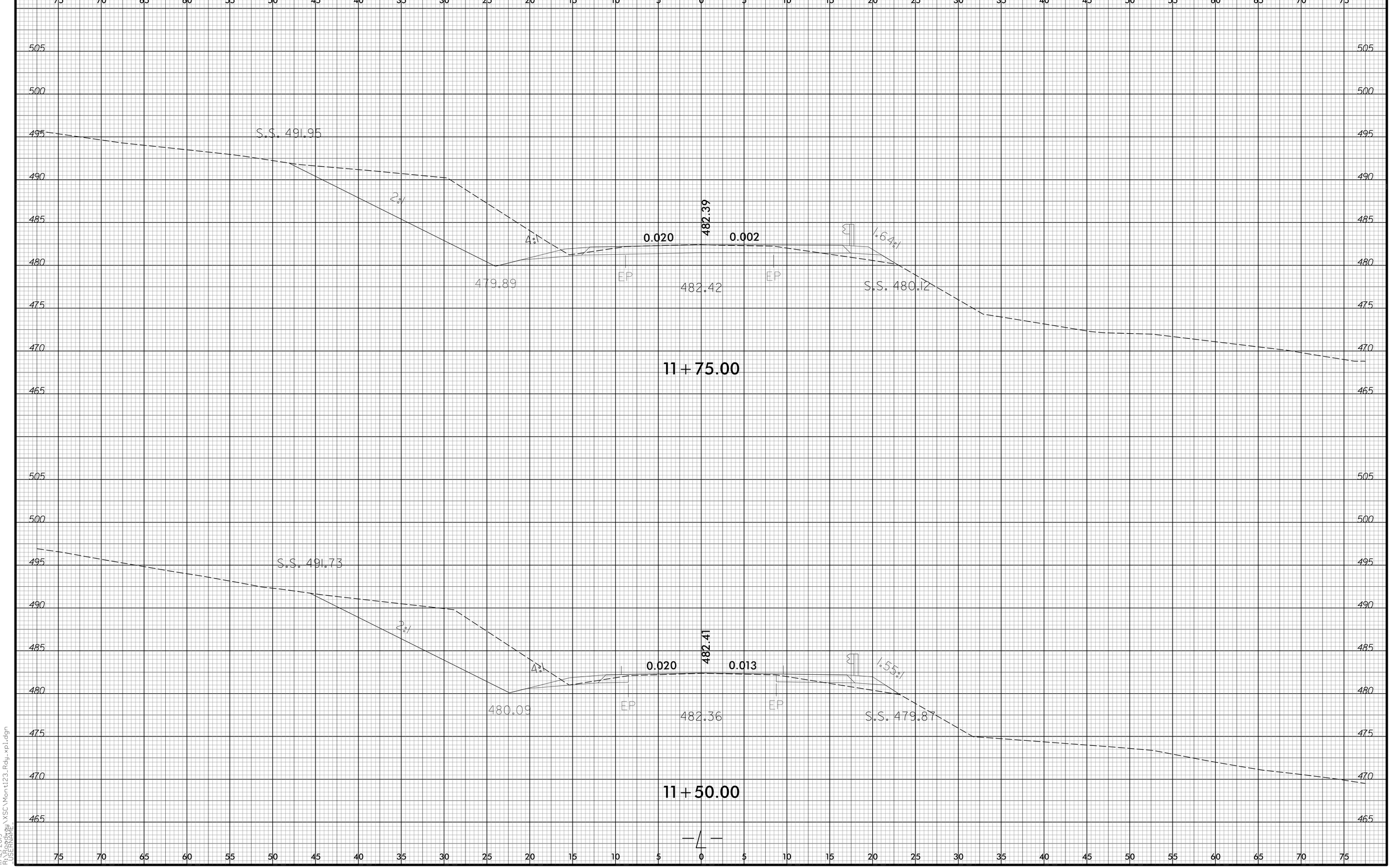

6/23/16

11/12/2019
R:\Roadway\XSC\Mont123_Rdy_xp1.dgn
USERNAME

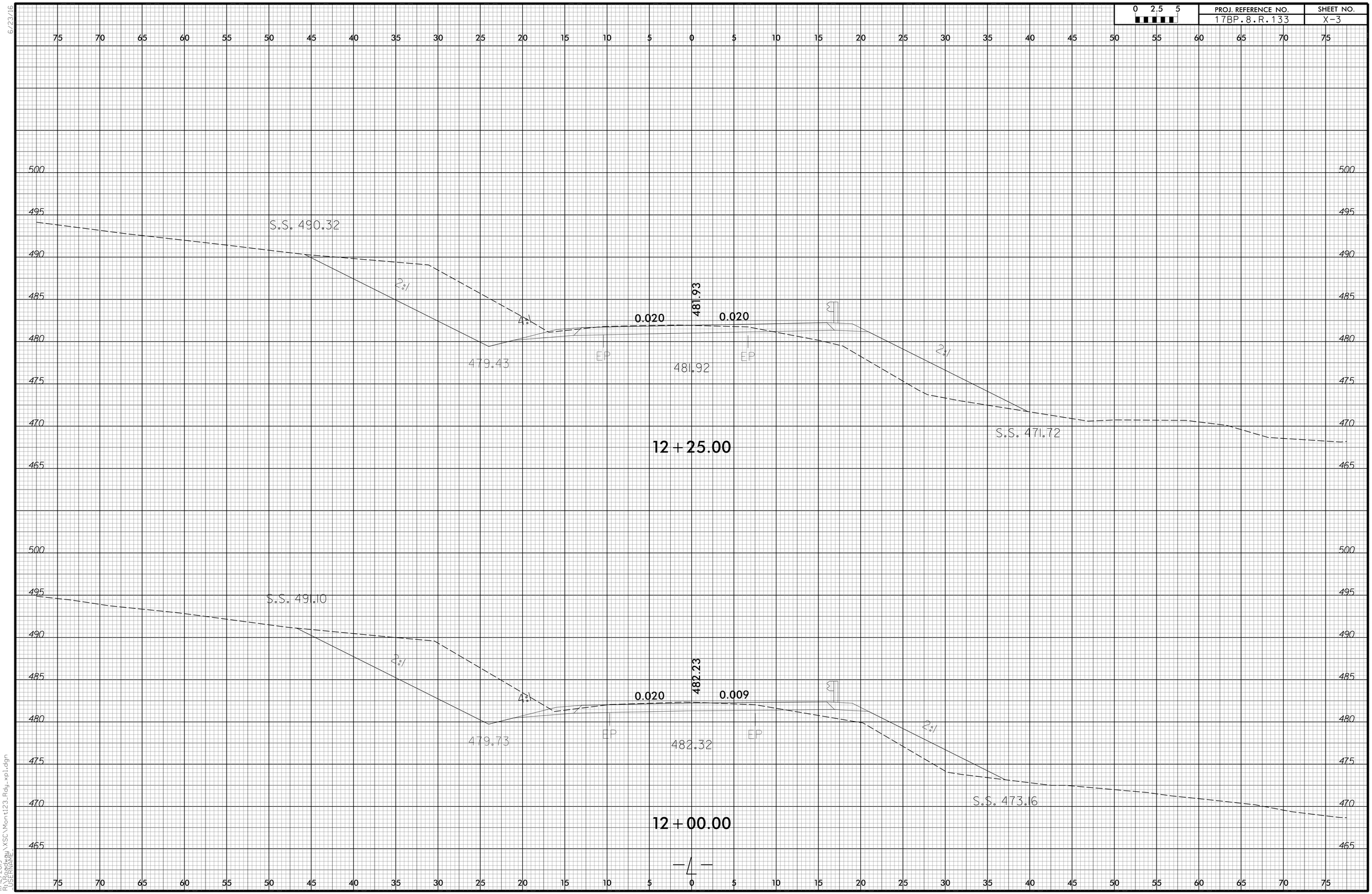

6/23/16

11/12/2019
R:\Roadway\XSC\Mont123_Rdy_xpl.dgn
USERNAME

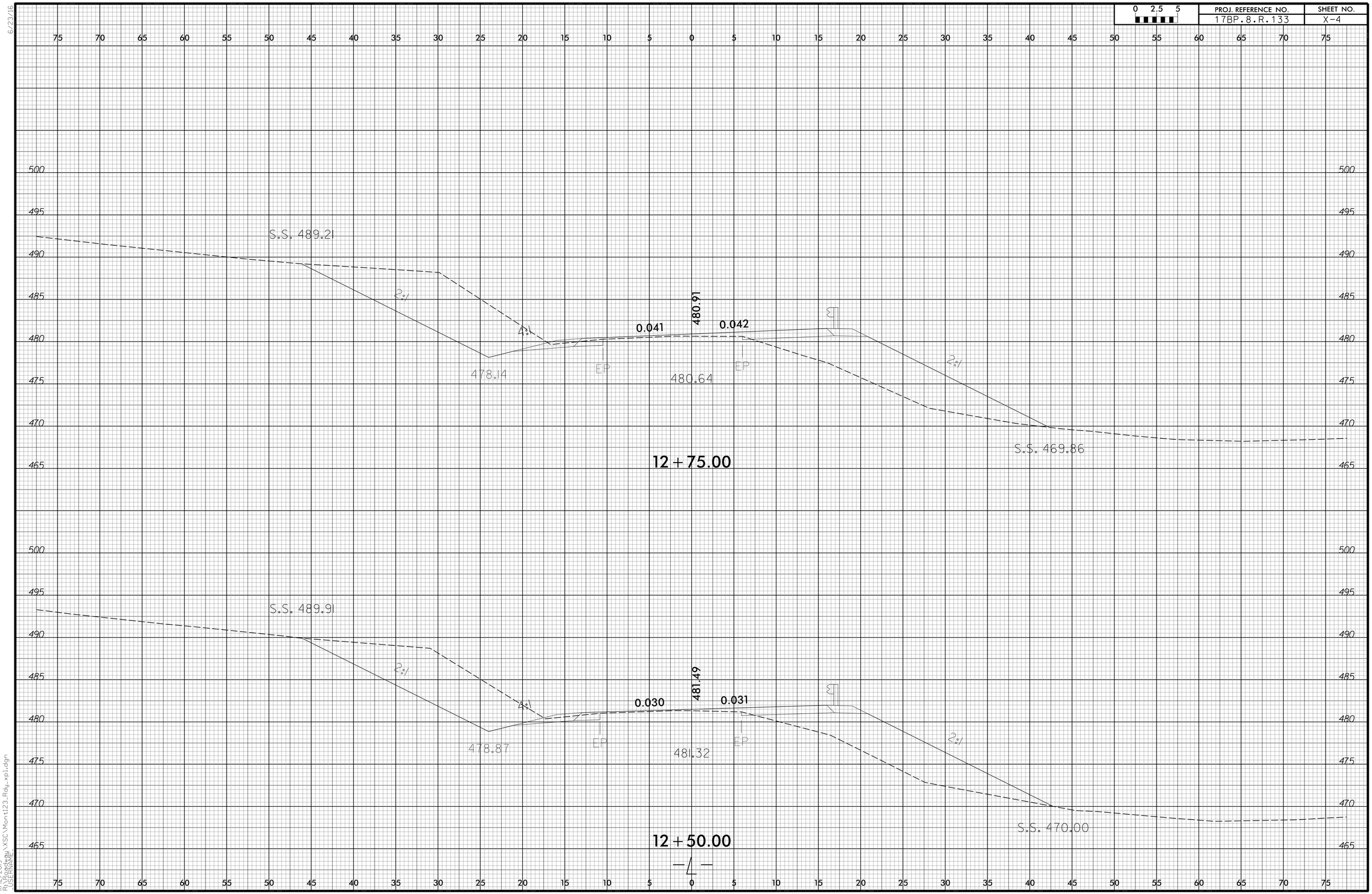

6/23/16

11/12/2019
R:\Roadway\XSC\Mont123_Rdy_xpl.dgn
USERNAME

6/23/16

0 2.5 5	PROJ. REFERENCE NO.	SHEET NO.
	17BP.8.R.133	X-5

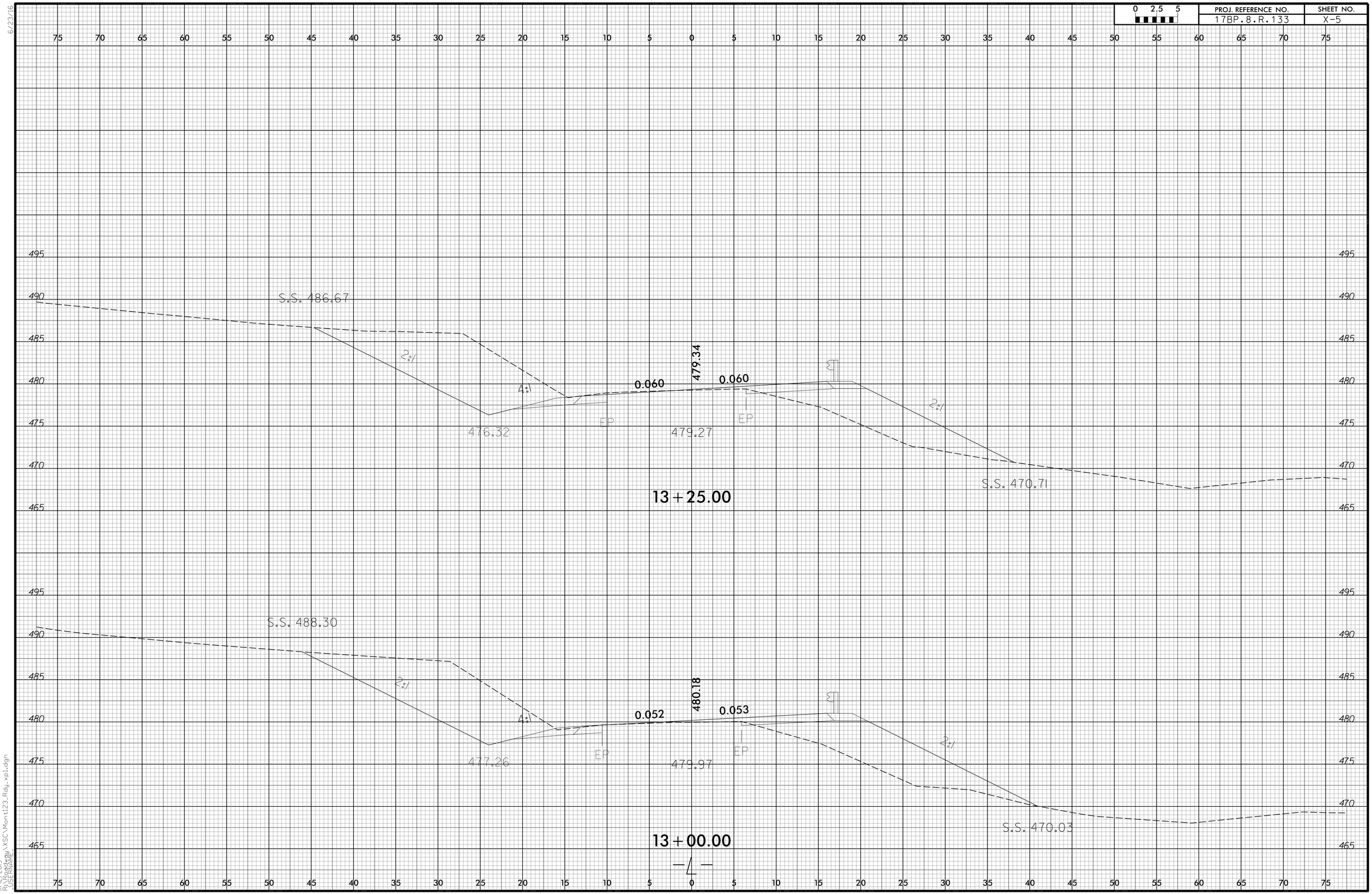

11/12/2019
R:\Projects\XSC\Mont123_Rdy_xpl.dgn
USERNAME

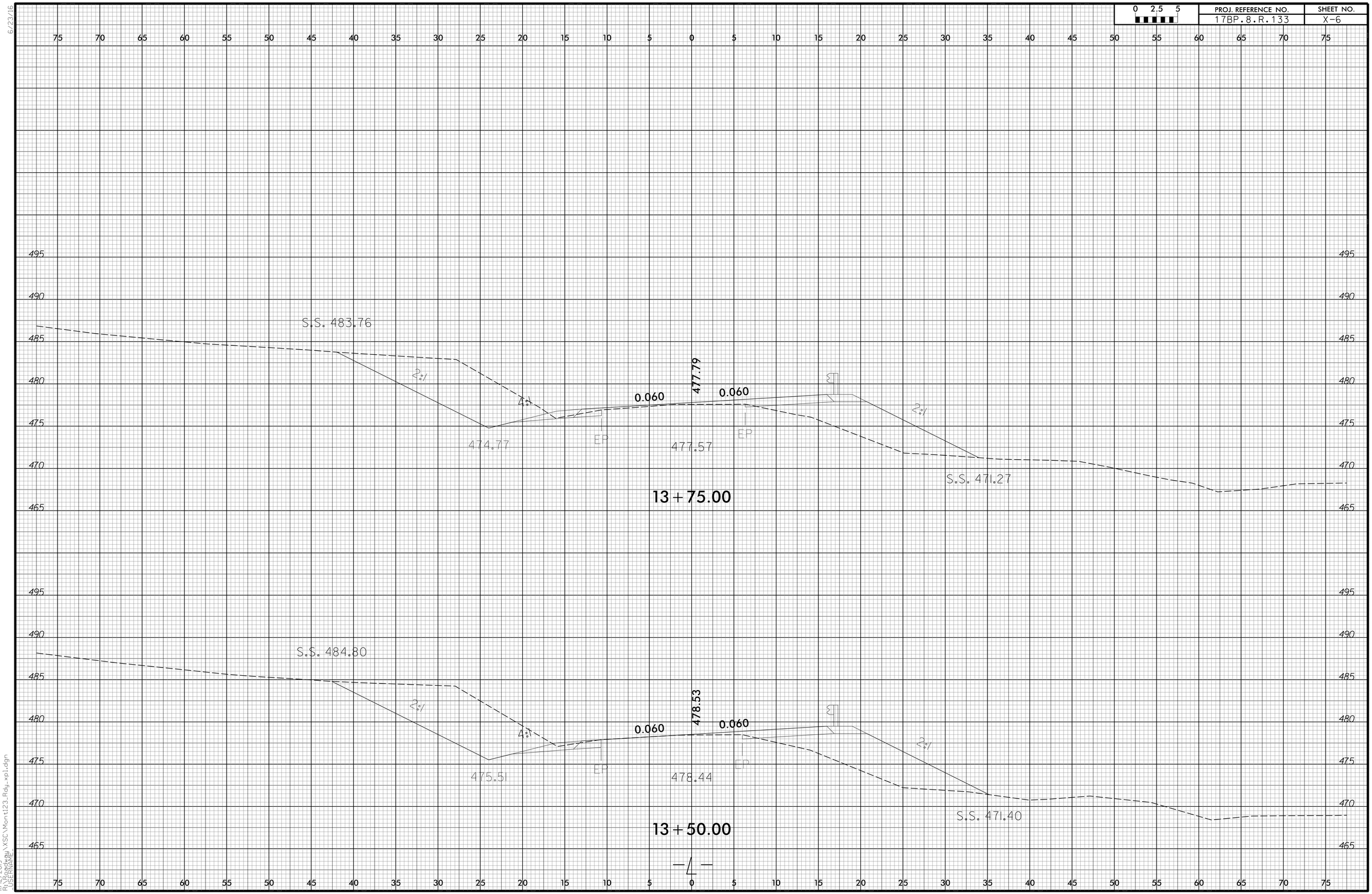

0 2.5 5
PROJ. REFERENCE NO.
17BP.8.R.133
SHEET NO.
X-6
S.S. 483.76
2:1
4:1
0.060
477.79
0.060
474.77
EP
477.57
EP
2:1
S.S. 471.27
13+75.00
S.S. 484.80
2:1
4:1
0.060
478.53
0.060
475.51
EP
478.44
EP
2:1
S.S. 471.40
13+50.00

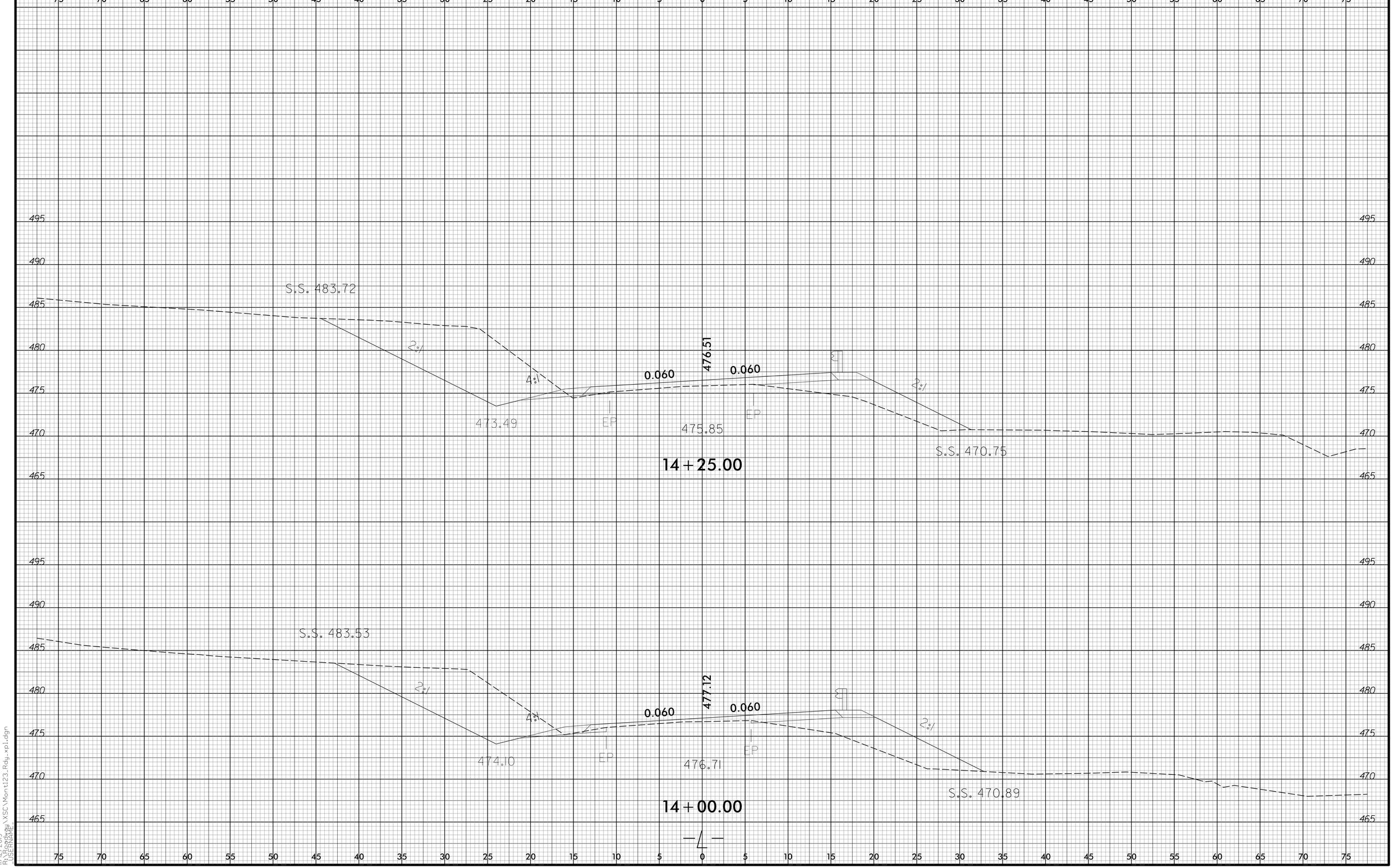

6/23/16

11/12/2019
R:\Roadway\XSC\Mont123_Rdy_xp1.dgn
USERNAME

6/23/16

0 2.5 5	PROJ. REFERENCE NO.	SHEET NO.
	17BP.8.R.133	X-8

11/12/2019
R:\Projects\XSC\Mont123_Rdy_xpl.dgn
USERNAME

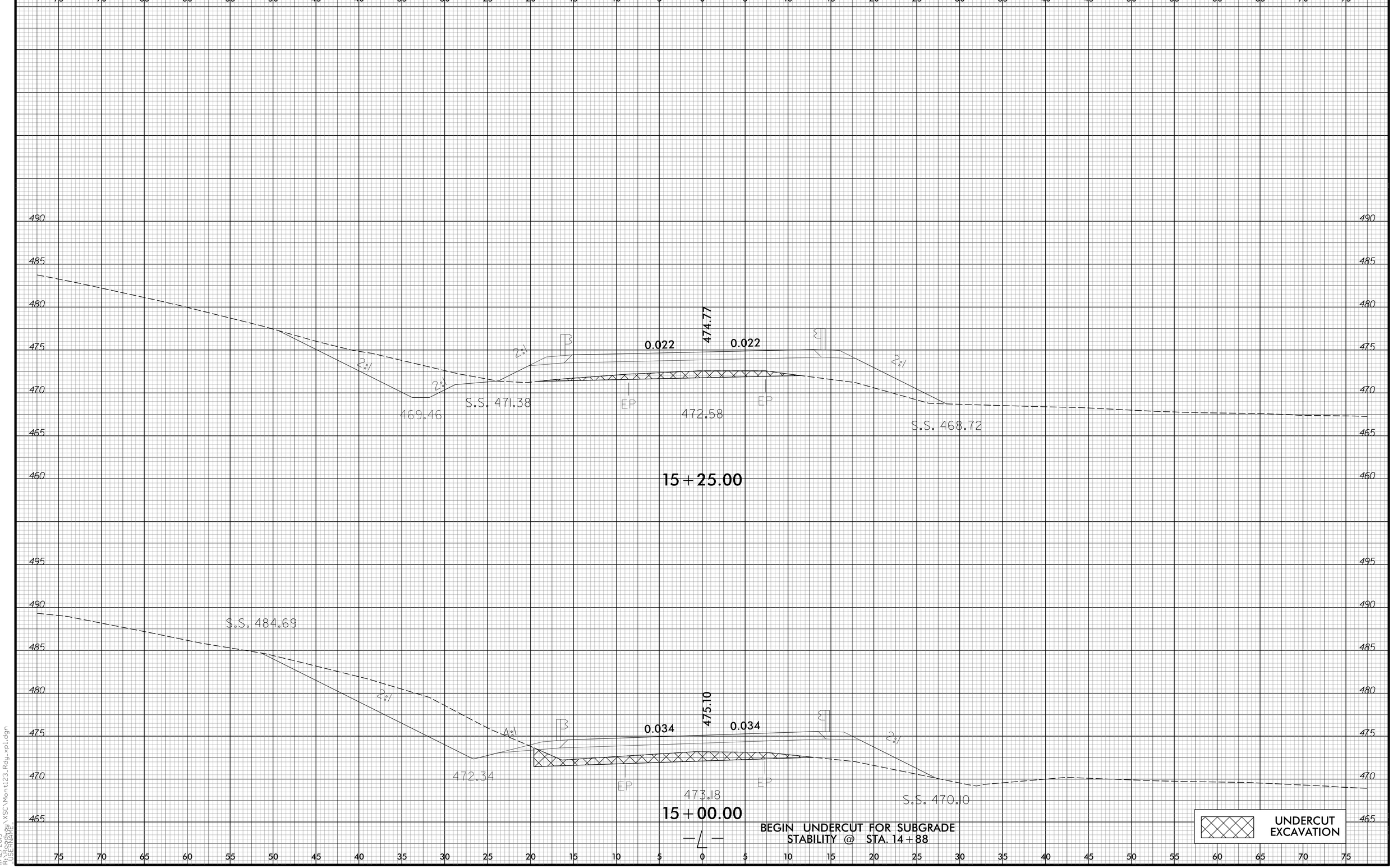

6/23/16

11/12/2019
R:\Roadway\XSC\Mont123_Rdy_xpl.dgn
USERNAME

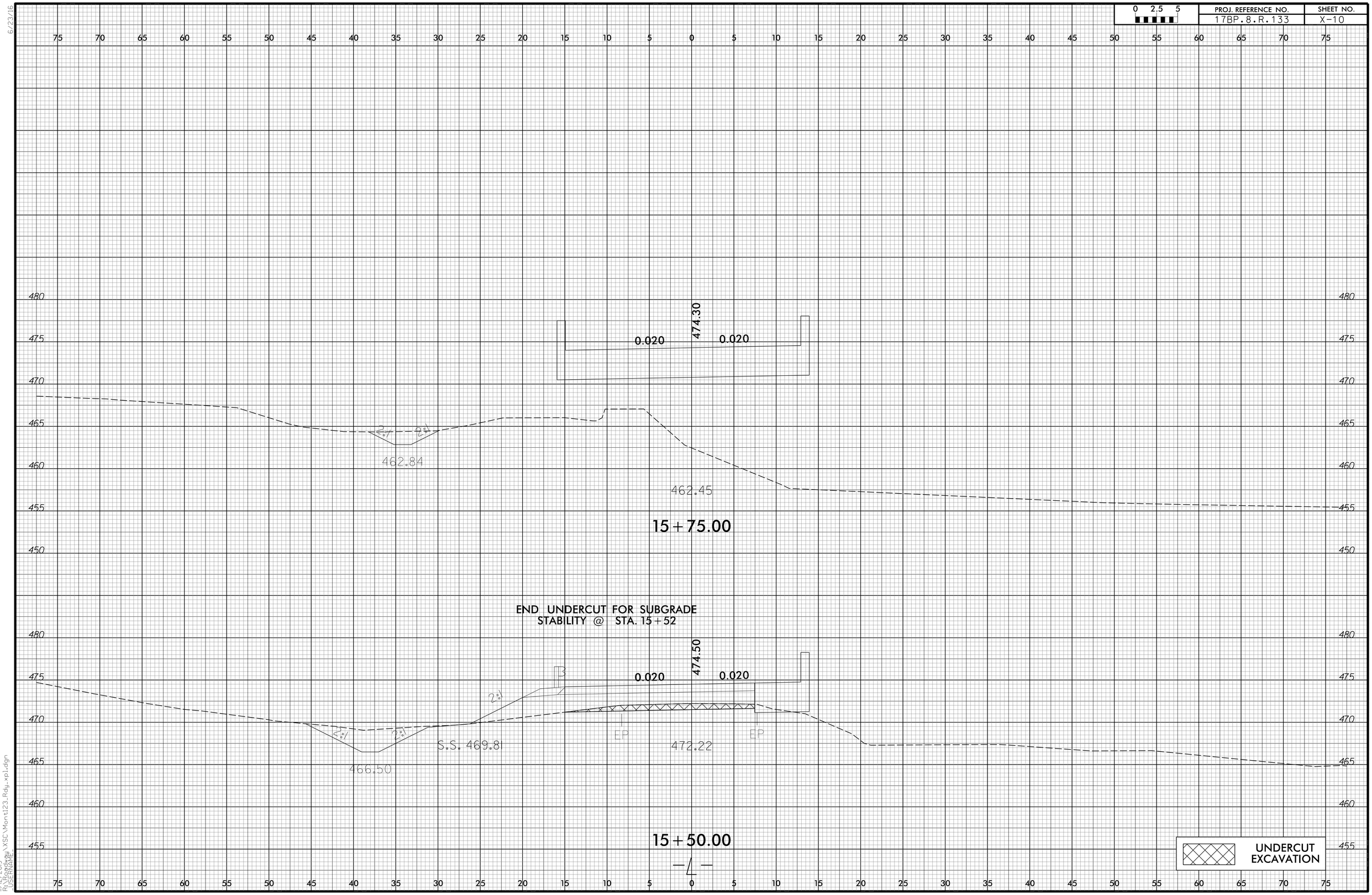

0 2.5 5
PROJ. REFERENCE NO.
17BP.8.R.133
SHEET NO.
X-10
474.30
0.020
0.020
462.84
462.45
15+75.00
END UNDERCUT FOR SUBGRADE
STABILITY @ STA. 15+52
474.50
0.020
0.020
S.S. 469.81
466.50
472.22
EP
EP
15+50.00
UNDERCUT
EXCAVATION

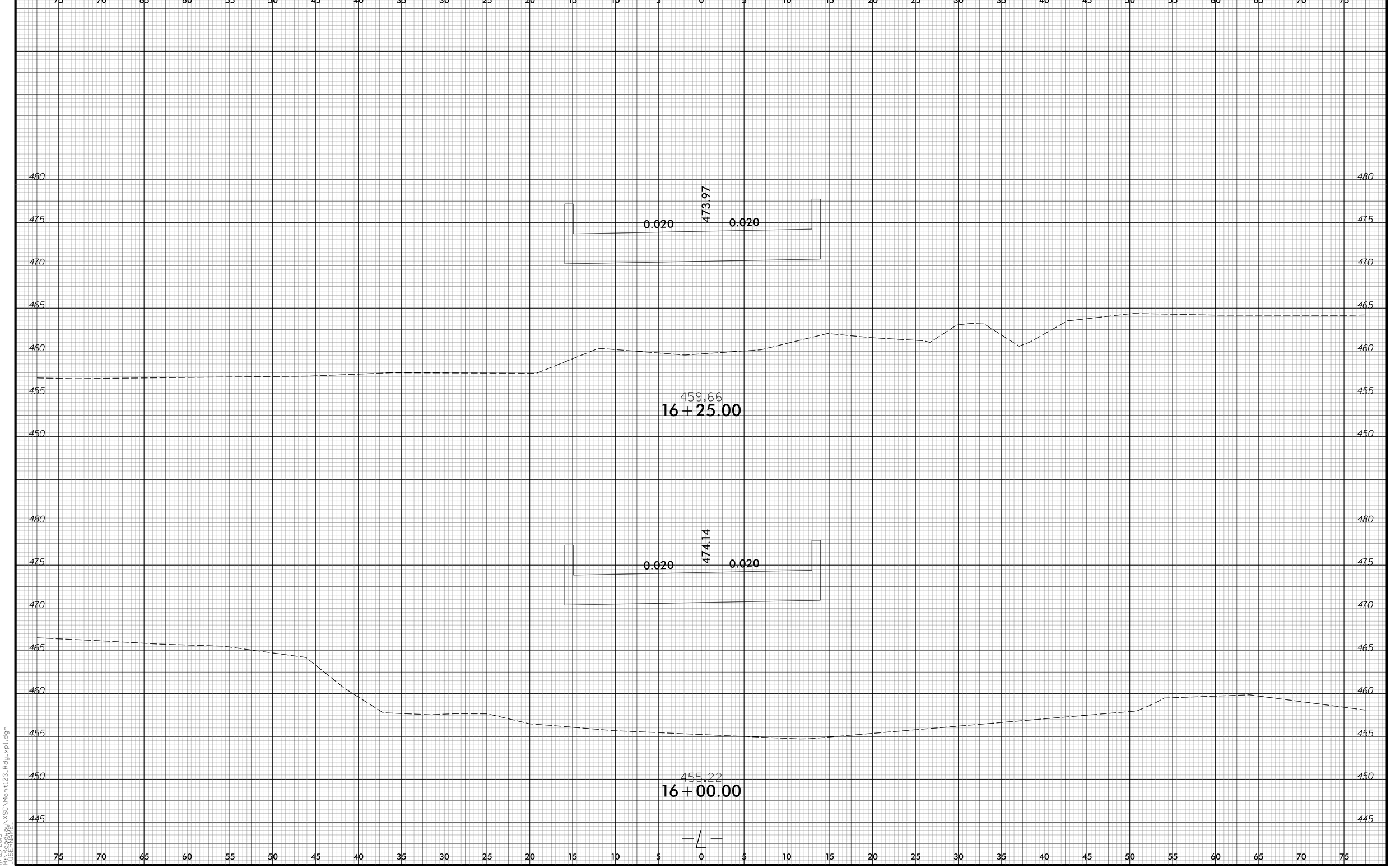

6/23/16

11/12/2019
R:\Roadway\XSC\Mont123_Rdy_xpl.dgn
USERNAME

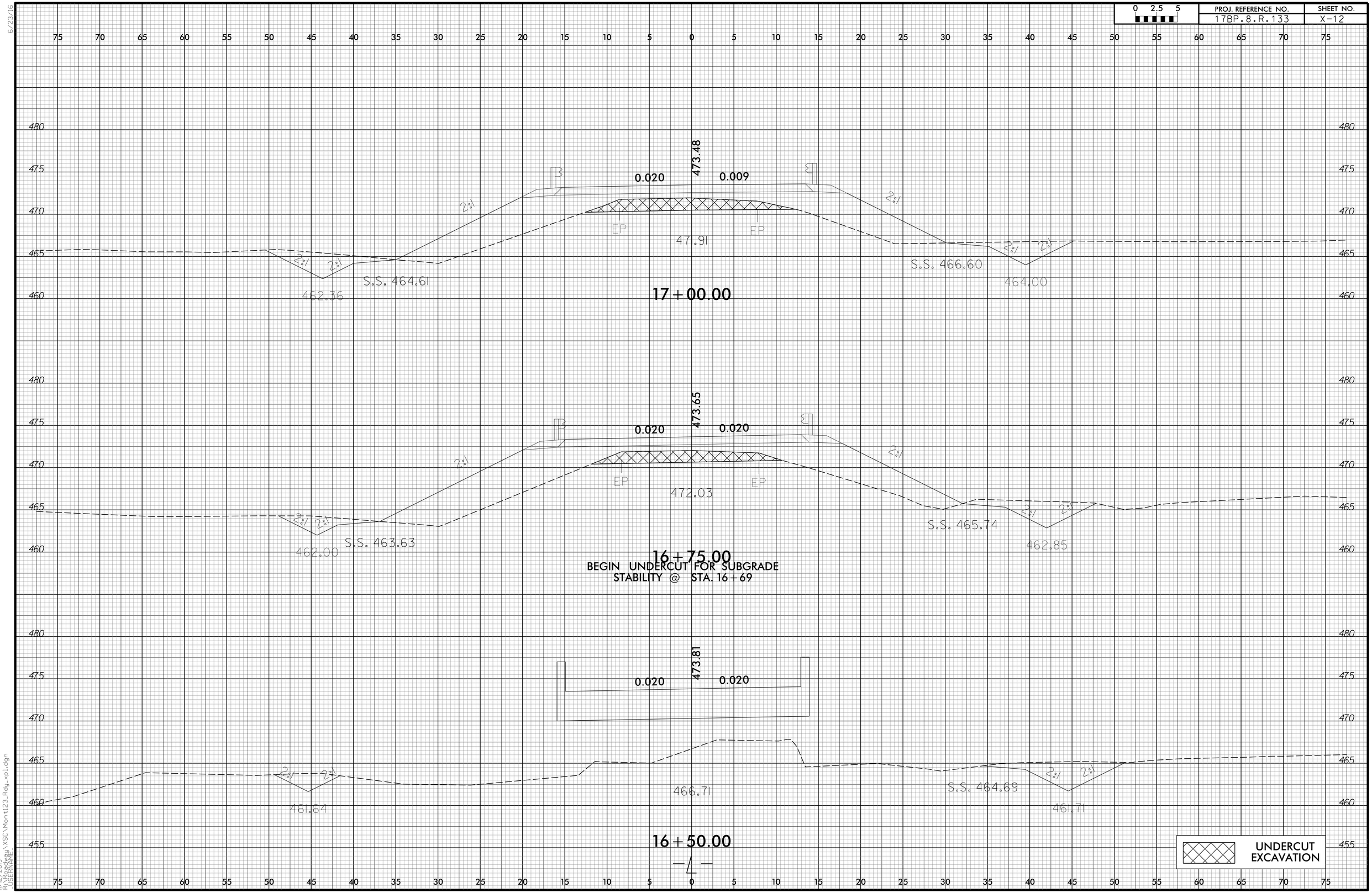

6/23/16

11/12/2019
R:\Roadway\XSC\Mont123_Rdy_xpl.dgn
USERNAME

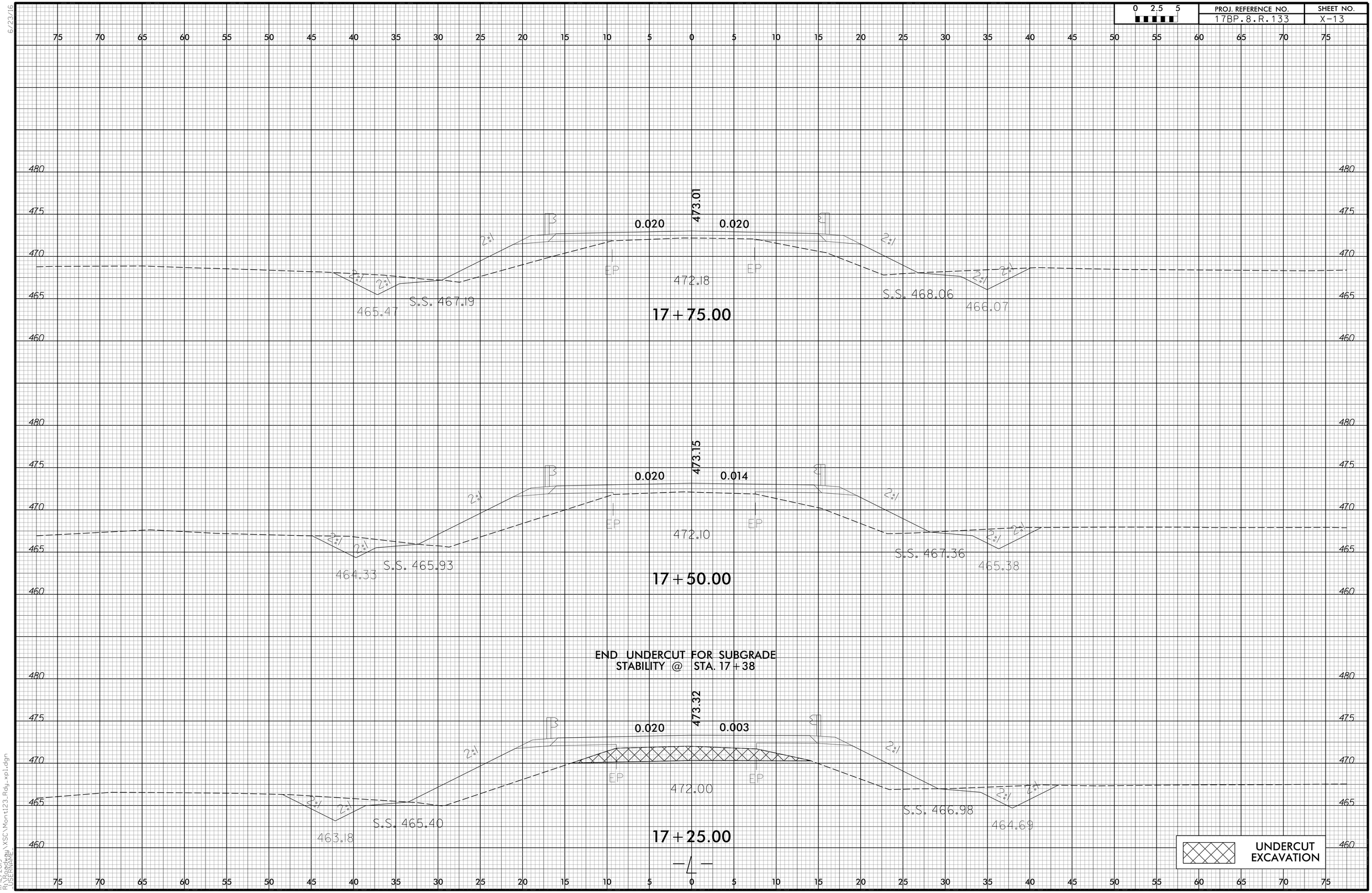

6/23/16

11/12/2019
R:\Roadway\XSC\Mont123_Rdy_xp1.dgn
USERNAME

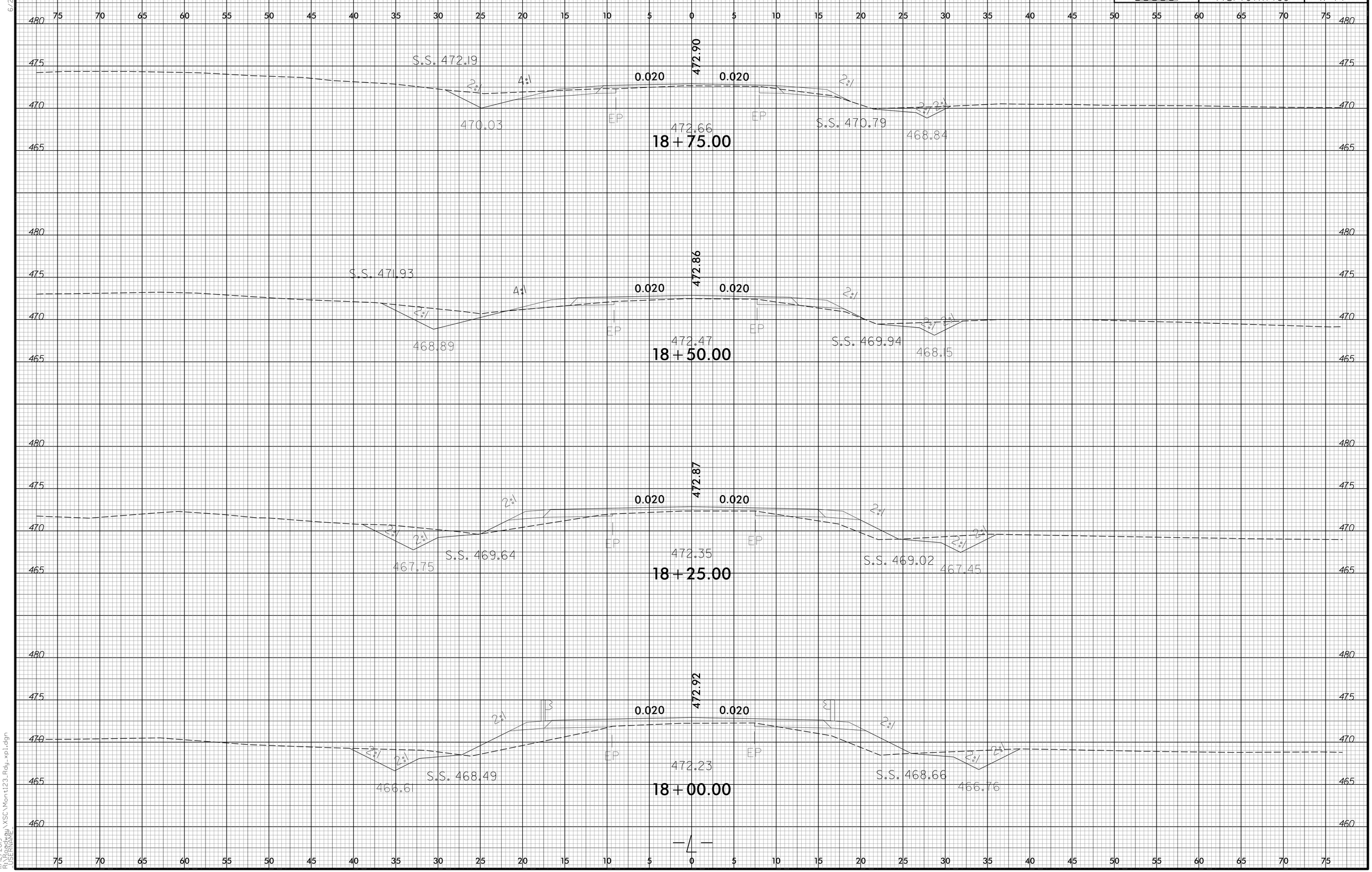

6/23/16

11/12/2019
R:\Roadway\XSC\Mont123_Rdy_xpl.dgn
USERNAME

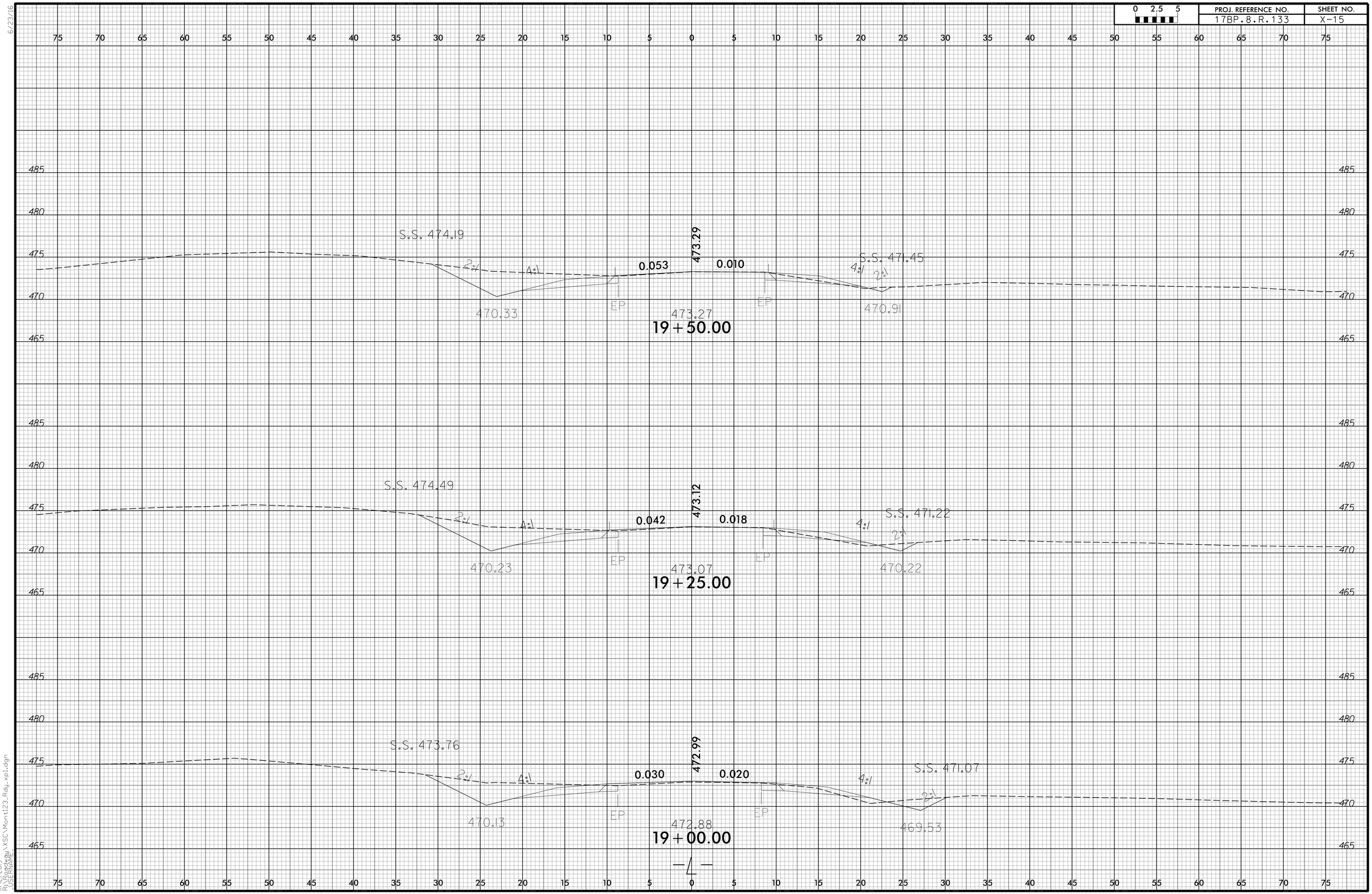

6/23/16

11/12/2019
R:\Roadway\XSC\Mont123_Rdy_xpl.dgn
USERNAME

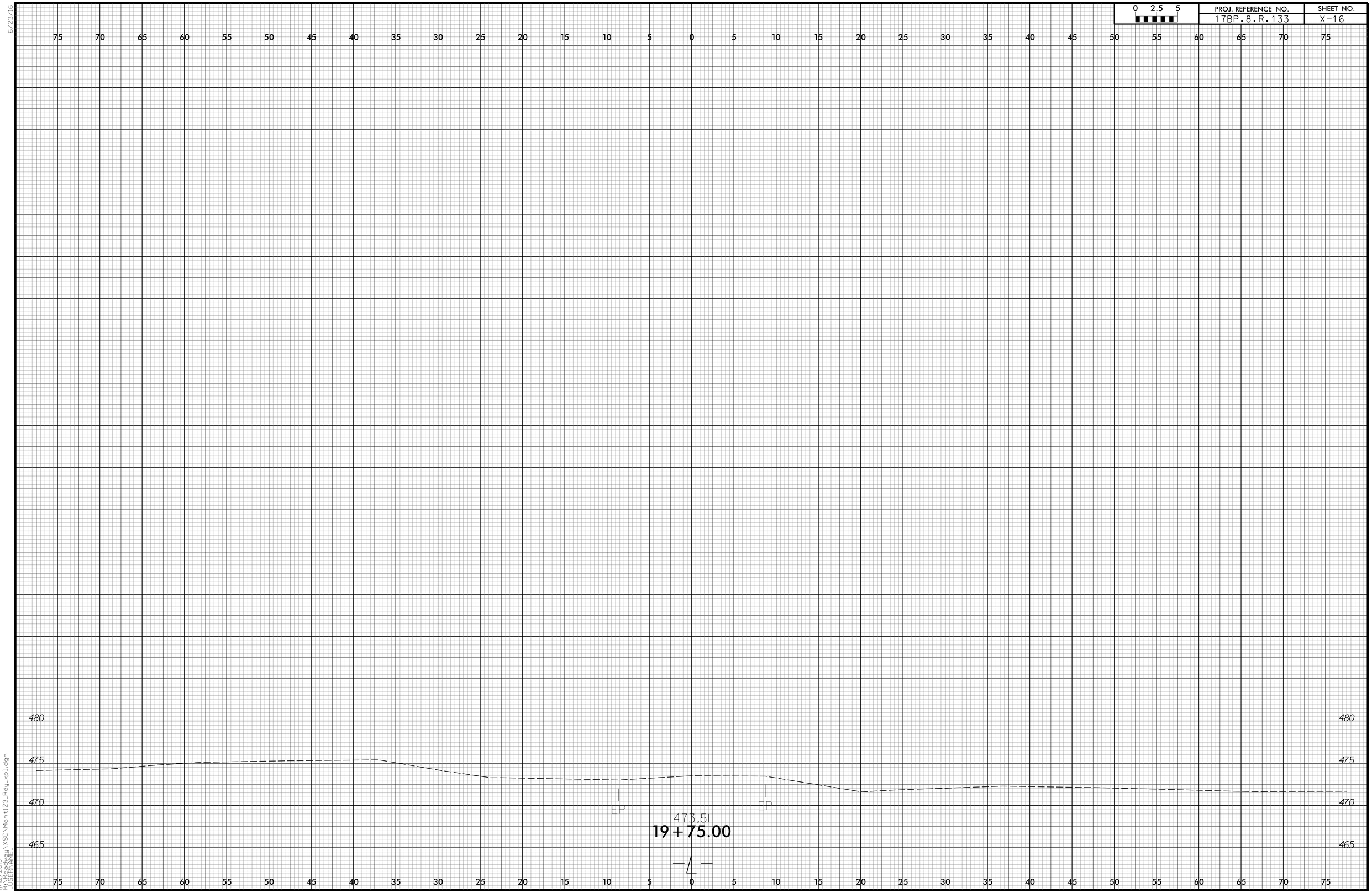

6/23/16

11/12/2019
R:\Roadway\XSC\Mont123_Rdy_xpl.dgn
USERNAME

-3.4868% △ -0.6543%

PVI = 14+45.00 -L-
EL. = 475.15
V.C. = 262.00 FT.

GRADE DATA -L-

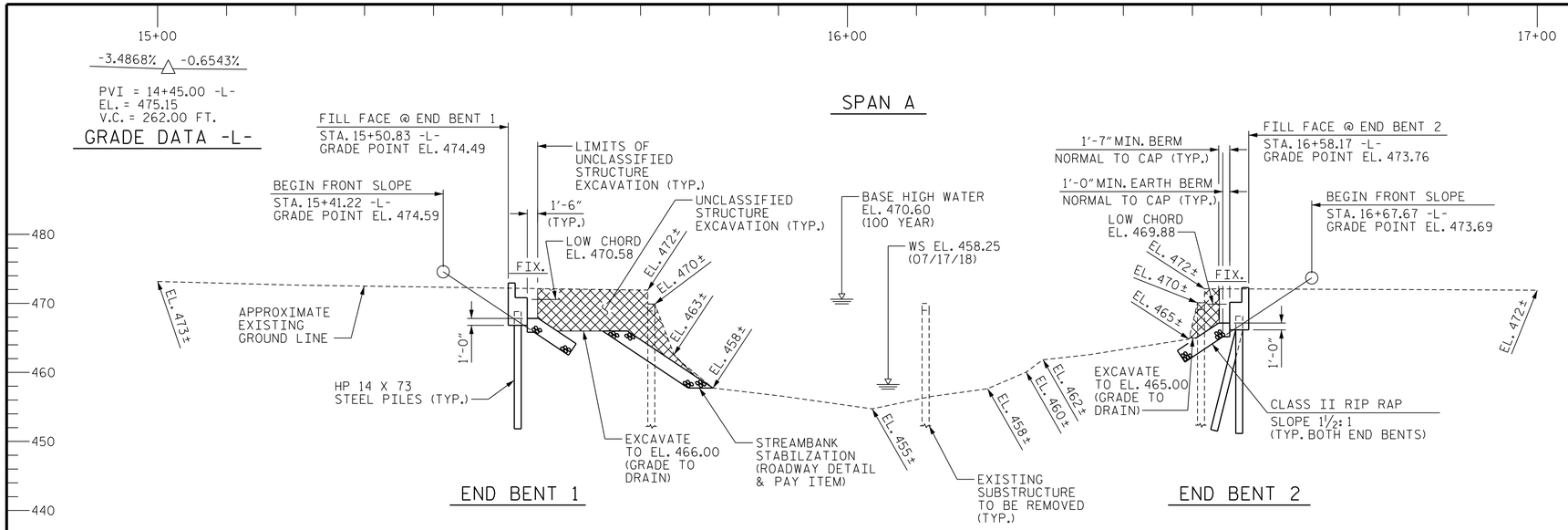

SECTION ALONG -L-

(SECTION TAKEN AT RIGHT ANGLES TO END BENTS)

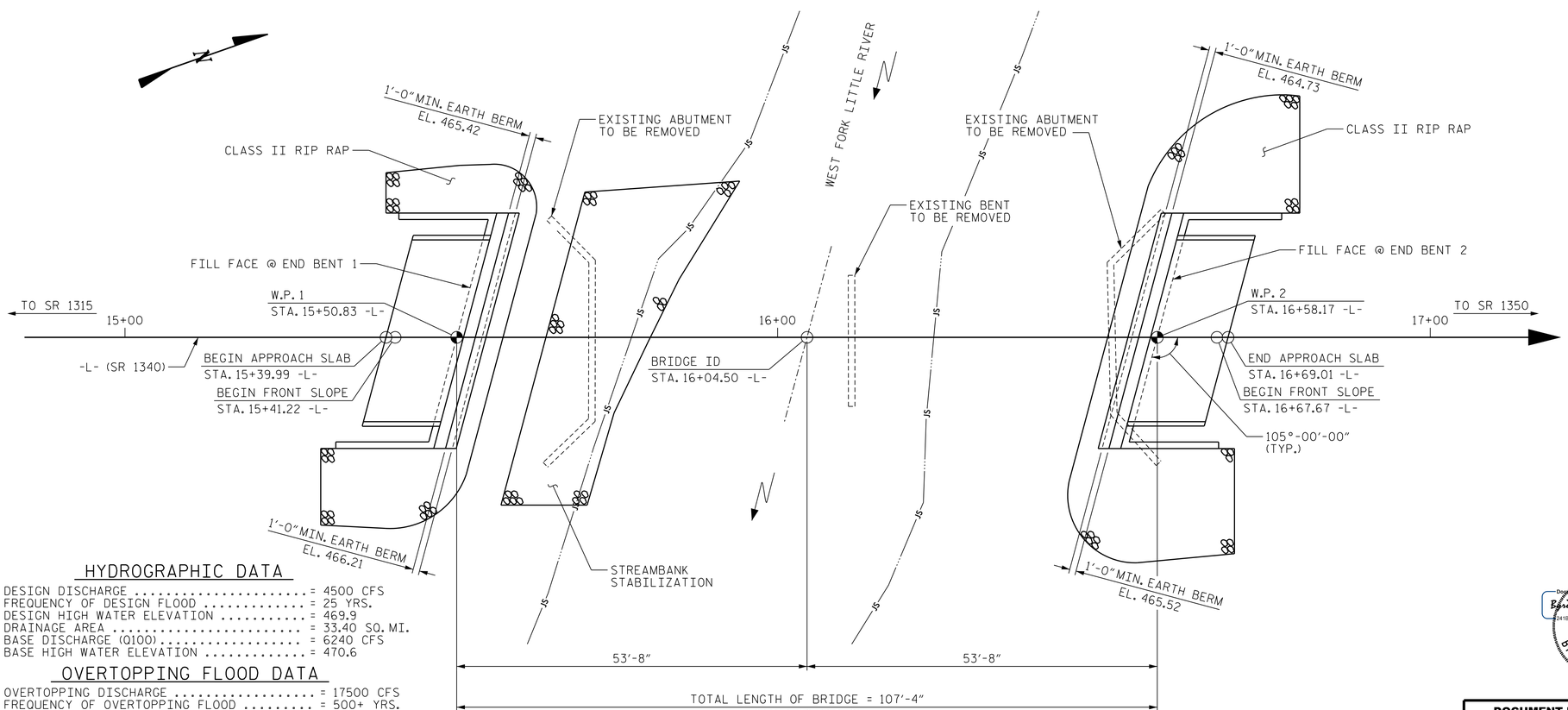

PLAN

(PILES NOT SHOWN FOR CLARITY)

HYDROGRAPHIC DATA

DESIGN DISCHARGE ..... = 4500 CFS
FREQUENCY OF DESIGN FLOOD ..... = 25 YRS.
DESIGN HIGH WATER ELEVATION ..... = 469.9
DRAINAGE AREA ..... = 33.40 SQ. MI.
BASE DISCHARGE (Q100) ..... = 6240 CFS
BASE HIGH WATER ELEVATION ..... = 470.6

OVERTOPPING FLOOD DATA

OVERTOPPING DISCHARGE ..... = 17500 CFS
FREQUENCY OF OVERTOPPING FLOOD ..... = 500+ YRS.
OVERTOPPING FLOOD ELEVATION ..... = 472.9 ✱
✱ AT STA. 18+40.52 -L-

DRAWN BY :	B.E. LANNING	DATE :	03/19
CHECKED BY :	B.E. ATKINSON	DATE :	03/19
DESIGN ENGINEER OF RECORD :	B.E. ATKINSON	DATE :	03/19

I HEREBY CERTIFY THESE PLANS ARE THE AS-BUILT PLANS

PROJECT NO. 17BP.8.R.133
MONTGOMERY COUNTY
STATION: 16+04.50 -L-

SHEET 1 OF 2 REPLACES BRIDGE NO. 123

STATE OF NORTH CAROLINA
DEPARTMENT OF TRANSPORTATION
RALEIGH

GENERAL DRAWING

FOR BRIDGE ON SR 1340
OVER WEST FORK LITTLE RIVER
BETWEEN SR 1315 & SR 1350

NORTH CAROLINA PROFESSIONAL SEAL 24939 ENGINEER BYRON E. ATKINSON
3/25/2021

DOCUMENT NOT CONSIDERED FINAL UNLESS ALL SIGNATURES COMPLETED

MI ENGINEERING
1011 SCHAUB DRIVE, SUITE 100
RALEIGH, NC 27606
(919) 851-6606
FIRM PE NUMBER : P-0671

REVISIONS							SHEET NO.
NO.	BY:	DATE:	NO.	BY:	DATE:		S-1
1			3				TOTAL SHEETS
2			4				15

3/25/2021
11:00:42 AM
User: blanning
Filename: N:\NC Bridges\2018 Archive\M18004_CH Eng_Montgomery 123 Br. Rep\17BP8R133\Structures\401_001_17BP8R133_SMU_G001_610123.dgn

BM #1: BENCHTIE SET IN 15" GUM, 82.76' LT. OF STA. 15+66.66 -L-, EL. 470.15

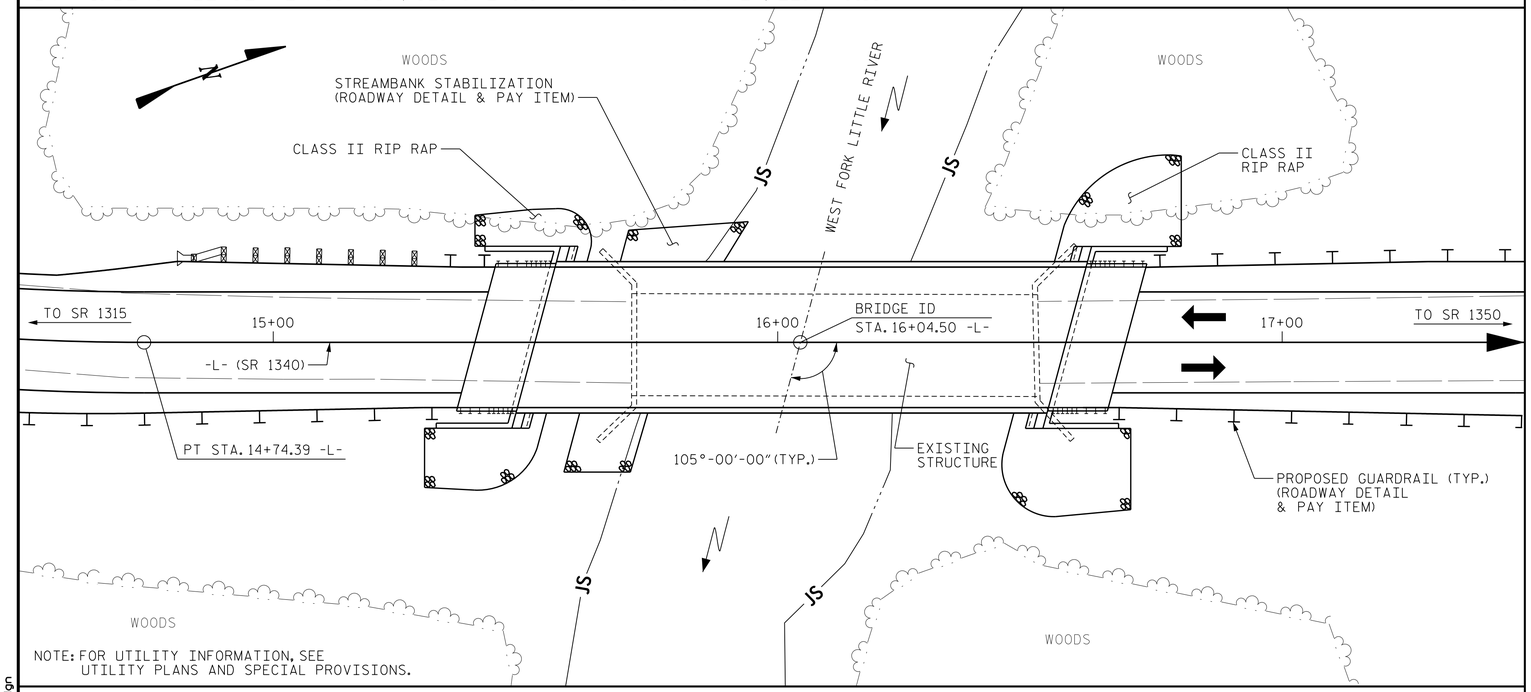

NOTE: FOR UTILITY INFORMATION, SEE UTILITY PLANS AND SPECIAL PROVISIONS.

LOCATION SKETCH

NOTES

ASSUMED LIVE LOAD = HL 93 OR ALTERNATE LOADING.

THIS BRIDGE HAS BEEN DESIGNED IN ACCORDANCE WITH THE AASHTO LRFD BRIDGE DESIGN SPECIFICATIONS.

THIS BRIDGE IS LOCATED IN SEISMIC ZONE 1.

FOR OTHER DESIGN DATA AND GENERAL NOTES, SEE SHEET SN.

FOR EROSION CONTROL MEASURES, SEE EROSION CONTROL PLANS.

INASMUCH AS THE PAINT SYSTEM ON THE EXISTING STRUCTURAL STEEL CONTAINS LEAD, THE CONTRACTOR'S ATTENTION IS DIRECTED TO ARTICLE 107-1 OF THE STANDARD SPECIFICATIONS. ANY COSTS RESULTING FROM COMPLIANCE WITH APPLICABLE STATE OR FEDERAL REGULATIONS PERTAINING TO HANDLING OF MATERIALS CONTAINING LEAD BASED PAINT SHALL BE INCLUDED IN THE BID PRICE FOR "REMOVAL OF EXISTING STRUCTURE AT STA. 16+04.50 -L-".

THE EXISTING STRUCTURE CONSISTING OF TWO SPANS (2 @ 40'-8"), WITH ASPHALT WEARING SURFACE ON TIMBER DECK WITH STEEL I BEAMS AND A CLEAR ROADWAY WIDTH OF 19'-1" ON MASS CONCRETE ABUTMENTS AND ON INTERIOR BENTS STEEL CAP & PILES LOCATED AT THE SITE OF THE PROPOSED STRUCTURE SHALL BE REMOVED IN IT'S ENTIRETY. THE EXISTING BRIDGE IS PRESENTLY POSTED FOR LOAD LIMIT. SHOULD THE STRUCTURAL INTEGRITY OF THE BRIDGE DETERIORATE DURING CONSTRUCTION OF THE PROPOSED BRIDGE, A LOAD LIMIT MAY BE POSTED AND MAY BE REDUCED AS FOUND NECESSARY DURING THE LIFE OF THE PROJECT. FOR REMOVAL OF EXISTING STRUCTURE, SEE SPECIAL PROVISIONS.

THE SUBSTRUCTURE OF THE EXISTING BRIDGE INDICATED ON THE PLANS IS FROM THE BEST INFORMATION AVAILABLE. THIS INFORMATION IS SHOWN FOR THE CONVENIENCE OF THE CONTRACTOR. THE CONTRACTOR SHALL HAVE NO CLAIM WHATSOEVER AGAINST THE DEPARTMENT OF TRANSPORTATION FOR ANY DELAYS OR ADDITIONAL COST INCURRED BASED ON DIFFERENCES BETWEEN THE EXISTING BRIDGE SUBSTRUCTURE SHOWN ON THE PLANS AND THE ACTUAL CONDITIONS AT THE PROJECT SITE.

REMOVAL OF THE EXISTING BRIDGE SHALL BE PERFORMED IN A MANNER THAT PREVENTS DEBRIS FROM FALLING INTO THE WATER. THE CONTRACTOR SHALL SUBMIT DEMOLITION PLANS FOR REVIEW AND REMOVE THE BRIDGE IN ACCORDANCE WITH ARTICLE 402-2 OF THE STANDARD SPECIFICATIONS.

THE MATERIAL SHOWN IN THE CROSS-HATCHED AREA SHALL BE EXCAVATED FOR A DISTANCE UP TO OF 35 FT. EACH SIDE OF CENTERLINE ROADWAY AS DIRECTED BY THE ENGINEER. THIS WORK WILL BE PAID FOR AT THE CONTRACT LUMP SUM PRICE FOR UNCLASSIFIED STRUCTURE EXCAVATION. SEE SECTION 412 OF THE STANDARD SPECIFICATIONS.

ASPHALT WEARING SURFACE IS INCLUDED IN THE ROADWAY QUANTITY. SEE ROADWAY QUANTITIES.

THIS STRUCTURE HAS BEEN DESIGNED IN ACCORDANCE WITH "HEC 18- EVALUATING SCOUR AT BRIDGES".

FOR FALSEWORK AND FORMWORK, SEE SPECIAL PROVISIONS.

FOR SUBMITTAL OF WORKING DRAWINGS, SEE SPECIAL PROVISIONS.

FOR CRANE SAFETY, SEE SPECIAL PROVISIONS.

FOR GROUT FOR STRUCTURES, SEE SPECIAL PROVISIONS.

FOR ASBESTOS ASSESSMENT FOR BRIDGE DEMOLITION AND RENOVATION ACTIVITIES, SEE SPECIAL PROVISIONS.

FOUNDATION NOTES

FOR PILES, SEE SECTION 450 OF THE STANDARD SPECIFICATIONS.

PILES AT END BENT 1 AND END BENT 2 ARE DESIGNED FOR A FACTORED RESISTANCE OF 139 TONS PER PILE.

DRILLED-IN PILES ARE REQUIRED FOR END BENT 1. EXCAVATE HOLES AT END BENT 1 PILE LOCATIONS TO A TIP ELEVATION NO HIGHER THAN 458.2 FT. AND WITH PENETRATION OF AT LEAST 2.0 FT. INTO WEATHERED ROCK OR ROCK AS DEFINED BY ARTICLE 411-1 OF THE STANDARD SPECIFICATIONS. FOR PILE EXCAVATION, SEE SECTION 450 OF THE STANDARD SPECIFICATIONS.

DRIVE PILES AT END BENT 1 TO A REQUIRED DRIVING RESISTANCE OF 235 TONS PER PILE IF THE BOTTOM OF PILE EXCAVATION HOLES CANNOT BE VISUALLY INSPECTED.

DRIVE PILES AT END BENT 2 TO A REQUIRED DRIVING RESISTANCE OF 235 TONS PER PILE.

STEEL H-PILE POINTS ARE REQUIRED FOR STEEL H-PILES AT END BENT 2. FOR STEEL PILE POINTS, SEE SECTION 450 OF THE STANDARD SPECIFICATIONS.

IT HAS BEEN ESTIMATED THAT A HAMMER WITH AN EQUIVALENT RATED ENERGY IN THE RANGE OF 40 TO 60 FT-KIPS PER BLOW WILL BE REQUIRED TO DRIVE PILES AT END BENT 1 AND END BENT 2. THIS ESTIMATED ENERGY RANGE DOES NOT RELEASE THE CONTRACTOR FROM PROVIDING DRIVING EQUIPMENT IN ACCORDANCE WITH SUBARTICLE 450-3(D)(2) OF THE STANDARD SPECIFICATIONS.

CONCRETE OR GROUT IS REQUIRED TO FILL HOLES FOR PILE EXCAVATION AT END BENT 1 AND END BENT 2.

TOTAL BILL OF MATERIAL

	REMOVAL OF EXISTING STRUCTURE	ASBESTOS ASSESSMENT	PILE EXCAVATION IN SOIL	PILE EXCAVATION NOT IN SOIL	UNCLASSIFIED STRUCTURE EXCAVATION	CLASS A CONCRETE	BRIDGE APPROACH SLABS	REINFORCING STEEL	PILE DRIVING EQUIPMENT SETUP FOR HP 14 X 73 STEEL PILES	HP 14 X 73 STEEL PILES		STEEL PILE POINTS	VERTICAL CONCRETE BARRIER RAIL	RIP RAP CLASS II (2'-0" THICK)	GEOTEXTILE FOR DRAINAGE	ELASTOMERIC BEARINGS	3'-0" X 3'-3" PRESTRESSED CONCRETE BOX BEAMS	
	LUMP SUM	LUMP SUM	LIN. FT.	LIN. FT.	LUMP SUM	CU. YDS.	LUMP SUM	LBS.	EACH	NO.	LIN. FT.	EACH	LIN. FT.	TON	SQ. YDS.	LUMP SUM	NO.	LIN. FT.
SUPERSTRUCTURE							LUMP SUM						210.00			LUMP SUM	10	1050.00
END BENT 1			50.0	6.0	LUMP SUM	27.9		4457	5	5	75.0			101	112			
END BENT 2					LUMP SUM	27.9		4457	5	5	75.0	5		145	161			
TOTAL	LUMP SUM	LUMP SUM	50.0	6.0	LUMP SUM	55.8	LUMP SUM	8914	10	10	150.0	5	210.00	246	273	LUMP SUM	10	1050.00

PROJECT NO. 17BP.8.R.133
MONTGOMERY COUNTY
STATION: 16+04.50 -L-

SHEET 2 OF 2

NORTH CAROLINA PROFESSIONAL SEAL 24939 ENGINEER BYRON E. ATKINSON
9/4/2019

DOCUMENT NOT CONSIDERED FINAL UNLESS ALL SIGNATURES COMPLETED

MI ENGINEERING
1011 SCHAUB DRIVE, SUITE 100
RALEIGH, NC 27606
(919) 851-6606
FIRM PE NUMBER : P-0671

STATE OF NORTH CAROLINA
DEPARTMENT OF TRANSPORTATION
RALEIGH

GENERAL DRAWING

FOR BRIDGE ON SR 1340
OVER WEST FORK LITTLE RIVER
BETWEEN SR 1315 & SR 1350

REVISIONS								SHEET NO.
NO.	BY:	DATE:	NO.	BY:	DATE:			S-2
1			3					TOTAL SHEETS
2			4					15

DRAWN BY : B.E. LANNING DATE : 03/19
CHECKED BY : B.E. ATKINSON DATE : 03/19
DESIGN ENGINEER OF RECORD : B.E. ATKINSON DATE : 03/19

9/4/2019
12:55:01 PM
User: blanning
Filename: N:\NC Bridges\MI8004_CH Eng.Montgomery 123 Br.Repl\17BP8R133\Structures\401_003.17BP8R133_SMU_GD02_610123.dgn

LOAD AND RESISTANCE FACTOR RATING (LRFD) SUMMARY FOR PRESTRESSED CONCRETE GIRDERS

LEVEL		VEHICLE	WEIGHT (W) (TONS)	CONTROLLING LOAD RATING	MINIMUM RATING FACTORS (RF)	TONS = W X RF	STRENGTH I LIMIT STATE											SERVICE III LIMIT STATE						COMMENT NUMBER
								MOMENT					SHEAR						MOMENT					
							LIVELOAD FACTORS	DISTRIBUTION FACTORS (DF)	RATING FACTOR	SPAN	GIRDER LOCATION	DISTANCE FROM LEFT END OF SPAN (ft)	DISTRIBUTION FACTORS (DF)	RATING FACTOR	SPAN	GIRDER LOCATION	DISTANCE FROM LEFT END OF SPAN (ft)	LIVELOAD FACTORS	DISTRIBUTION FACTORS (DF)	RATING FACTOR	SPAN	GIRDER LOCATION	DISTANCE FROM LEFT END OF SPAN (ft)	
DESIGN LOAD RATING		HL-93(Inv)	N/A	1	1.28	--	1.75	0.275	1.38	A	E	51.7	0.579	1.53	A	E	10.3	0.80	0.275	**1.28**	A	E	51.7	
		HL-93(Opr)	N/A	--	1.79	--	1.35	0.275	1.79	A	E	51.7	0.579	2.05	A	E	10.3	N/A	--	--	--	--	--	
		HS-20(Inv)	36.000	2	1.81	65.16	1.75	0.275	1.94	A	E	51.7	0.579	2.14	A	E	10.3	0.80	0.275	**1.81**	A	E	51.7	
		HS-20(Opr)	36.000	--	2.52	90.72	1.35	0.275	2.52	A	E	51.7	0.579	2.84	A	E	10.3	N/A	--	--	--	--	--	
LEGAL LOAD RATING	SV	SNSH	13.500	--	4.31	58.19	1.4	0.275	5.79	A	E	51.7	0.579	7.06	A	E	10.3	0.80	0.275	4.31	A	E	51.7	
		SNGARBS2	20.000	--	3.11	62.20	1.4	0.275	4.18	A	E	51.7	0.579	4.87	A	E	10.3	0.80	0.275	3.11	A	E	51.7	
		SNAGRIS2	22.000	--	2.91	64.02	1.4	0.275	3.91	A	E	51.7	0.579	4.47	A	E	10.3	0.80	0.275	2.91	A	E	51.7	
		SNCOTTS3	27.250	--	2.14	58.32	1.4	0.275	2.88	A	E	51.7	0.579	3.40	A	E	10.3	0.80	0.275	2.14	A	E	51.7	
		SNAGGRS4	34.925	--	1.75	61.12	1.4	0.275	2.35	A	E	51.7	0.579	2.73	A	E	10.3	0.80	0.275	1.75	A	E	51.7	
		SNS5A	35.550	--	1.71	60.79	1.4	0.275	2.30	A	E	51.7	0.579	2.73	A	E	10.3	0.80	0.275	1.71	A	E	51.7	
		SNS6A	39.950	--	1.56	62.32	1.4	0.275	2.09	A	E	51.7	0.579	2.46	A	E	10.3	0.80	0.275	1.56	A	E	51.7	
		SNS7B	42.000	--	1.48	62.16	1.4	0.275	1.99	A	E	51.7	0.579	2.38	A	E	10.3	0.80	0.275	1.48	A	E	51.7	
	TTST	TNAGRIT3	33.000	--	1.89	62.37	1.4	0.275	2.55	A	E	51.7	0.579	2.98	A	E	10.3	0.80	0.275	1.89	A	E	51.7	
		TNT4A	33.075	--	1.90	62.84	1.4	0.275	2.55	A	E	51.7	0.579	2.92	A	E	10.3	0.80	0.275	1.90	A	E	51.7	
		TNT6A	41.600	--	1.54	64.06	1.4	0.275	2.07	A	E	51.7	0.579	2.49	A	E	10.3	0.80	0.275	1.54	A	E	51.7	
		TNT7A	42.000	--	1.54	64.68	1.4	0.275	2.07	A	E	51.7	0.579	2.44	A	E	10.3	0.80	0.275	1.54	A	E	51.7	
		TNT7B	42.000	--	1.57	65.94	1.4	0.275	2.11	A	E	51.7	0.579	2.33	A	E	10.3	0.80	0.275	1.57	A	E	51.7	
		TNAGRIT4	43.000	--	1.51	64.93	1.4	0.275	2.03	A	E	51.7	0.579	2.27	A	E	10.3	0.80	0.275	1.51	A	E	51.7	
		TNAGT5A	45.000	--	1.43	64.35	1.4	0.275	1.92	A	E	51.7	0.579	2.22	A	E	10.3	0.80	0.275	1.43	A	E	51.7	
		TNAGT5B	45.000	3	1.42	63.90	1.4	0.275	1.91	A	E	51.7	0.579	2.15	A	E	10.3	0.80	0.275	**1.42**	A	E	51.7	

LOAD FACTORS:

DESIGN LOAD RATING FACTORS	LIMIT STATE	γ_{DC}	γ_{DW}
	STRENGTH I	1.25	1.50
	SERVICE III	1.00	1.00

NOTES:

MINIMUM RATING FACTORS ARE BASED ON THE STRENGTH I AND SERVICE III LIMIT STATES.

ALLOWABLE STRESSES FOR SERVICE III LIMIT STATE ARE AS REQUIRED FOR DESIGN.

COMMENTS:

1.
2.
3.
4.

(#) CONTROLLING LOAD RATING

(1) DESIGN LOAD RATING (HL-93)

(2) DESIGN LOAD RATING (HS-20)

(3) LEGAL LOAD RATING **

** SEE CHART FOR VEHICLE TYPE

GIRDER LOCATION

I - INTERIOR GIRDER
E - EXTERIOR GIRDER

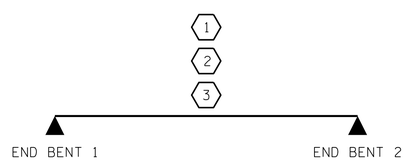

LRFR SUMMARY

PROJECT NO. 17BP.8.R.133
MONTGOMERY COUNTY
STATION: 16+04.50 -L-

STATE OF NORTH CAROLINA
DEPARTMENT OF TRANSPORTATION
RALEIGH

LRFR SUMMARY FOR
105' BOX BEAM UNIT
105° SKEW
(NON-INTERSTATE TRAFFIC)

NORTH CAROLINA PROFESSIONAL SEAL 24939 ENGINEER BYRON E. ATKINSON
9/4/2019

DOCUMENT NOT CONSIDERED FINAL UNLESS ALL SIGNATURES COMPLETED

MI ENGINEERING
1011 SCHAUB DRIVE, SUITE 100
RALEIGH, NC 27606
(919) 851-6606
FIRM PE NUMBER : P-0671

REVISIONS						SHEET NO.
NO.	BY:	DATE:	NO.	BY:	DATE:	S-3
1			3			TOTAL SHEETS
2			4			15

DRAWN BY : B.E. LANNING DATE : 03/19
CHECKED BY : B.E. ATKINSON DATE : 03/19
DESIGN ENGINEER OF RECORD : B.E. ATKINSON DATE : 03/19

9/4/2019
12:55:03 PM
User: blanning
Filename: N:\NC Bridges\MI8004_CH Eng_Montgomery 123 Br. Repl\17BP8R133\Structures\401_005_17BP8R133_SMU_GD03_610123.dgn

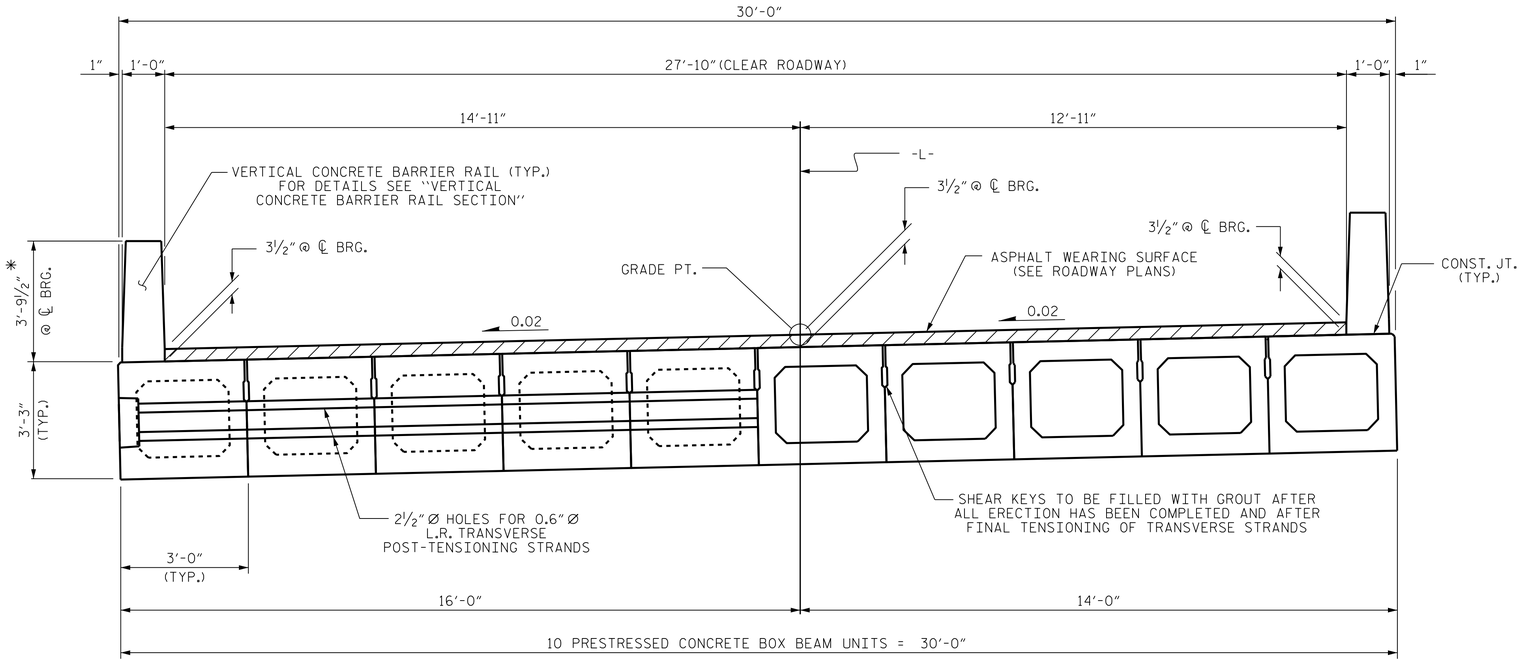

HALF SECTION
AT INTERMEDIATE DIAPHRAGMS

HALF SECTION
THROUGH VOIDS

TYPICAL SECTION

*THE MAXIMUM BARRIER RAIL HEIGHT AND ASPHALT THICKNESS IS SHOWN. THE HEIGHT OF THE BARRIER RAIL AND ASPHALT THICKNESS VARIES WHILE THE TOP OF THE BARRIER RAIL FOLLOWS THE PROFILE OF THE GUTTERLINE. FOR RAIL HEIGHT DETAILS AND ASPHALT THICKNESS, SEE THE "VERTICAL CONCRETE BARRIER RAIL SECTION" DETAIL.

FIXED END

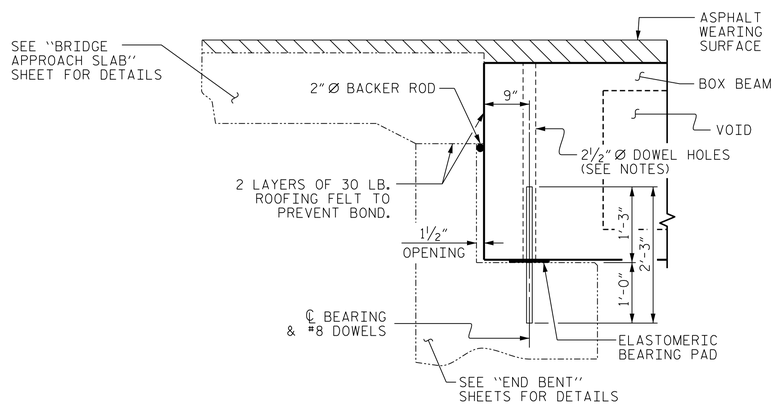

SECTION AT END BENT

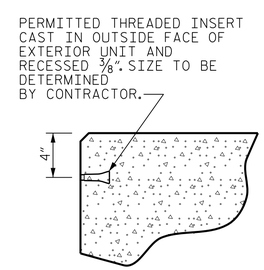

THREADED INSERT DETAIL

NOTES

ALL PRESTRESSING STRANDS SHALL BE 7-WIRE LOW RELAXATION GRADE 270 STRANDS AND SHALL CONFORM TO AASHTO M203 EXCEPT FOR SAMPLING REQUIREMENTS WHICH SHALL BE IN ACCORDANCE WITH THE STANDARD SPECIFICATIONS.

ALL REINFORCING STEEL CAST WITH THE BOX BEAM SECTIONS SHALL BE GRADE 60 AND SHALL BE INCLUDED IN THE UNIT PRICE BID FOR PRESTRESSED CONCRETE BOX BEAMS.

FLAME CUTTING OF THE TRANSVERSE POST-TENSIONING STRAND IS NOT ALLOWED.

RECESSES FOR TRANSVERSE STRANDS SHALL BE GROUTED AFTER THE TENSIONING OF THE STRANDS.

THE 2½" Ø DOWEL HOLES AT FIXED ENDS OF BOX BEAM SECTIONS SHALL BE FILLED WITH NON-SHRINK GROUT.

THE BACKER RODS SHALL CONFORM TO THE REQUIREMENTS OF TYPE M BOND BREAKER. SEE SECTION 1028 OF THE STANDARD SPECIFICATIONS.

THE TRANSFER OF LOAD FROM THE ANCHORAGES TO THE BOX BEAM UNIT SHALL BE DONE WHEN THE CONCRETE HAS REACHED A COMPRESSIVE STRENGTH OF NOT LESS THAN 5,500 PSI.

ALL REINFORCING STEEL IN VERTICAL CONCRETE BARRIER RAILS SHALL BE EPOXY COATED.

PRESTRESSING STRANDS SHALL BE CUT FLUSH WITH THE BOX BEAM UNIT ENDS.

APPLY EPOXY PROTECTIVE COATING TO BOX BEAM UNIT ENDS.

VERTICAL GROOVED CONTRACTION JOINTS, ½" IN DEPTH, SHALL BE TOOLED IN ALL EXPOSED FACES OF THE BARRIER RAIL AND IN ACCORDANCE WITH ARTICLE 825-10(B) OF THE STANDARD SPECIFICATIONS. A VERTICAL CONTRACTION JOINT SHALL BE LOCATED AT EACH THIRD POINT BETWEEN BARRIER RAIL EXPANSION JOINTS. ONLY ONE CONTRACTION JOINT IS REQUIRED AT MIDPOINT OF BARRIER RAIL SEGMENTS LESS THAN 20 FEET IN LENGTH AND NO CONTRACTION JOINTS ARE REQUIRED FOR THOSE SEGMENTS LESS THAN 10 FEET IN LENGTH.

THE LOCATION OF THE VOID DRAINS MAY BE SHIFTED SLIGHTLY WHERE NECESSARY TO CLEAR PRESTRESSING STRANDS OR TRANSVERSE REINFORCING STEEL.

FOR GROUT FOR STRUCTURES, SEE SPECIAL PROVISIONS.

THE PERMITTED THREADED INSERTS ARE DETAILED AS AN OPTION FOR THE CONTRACTOR TO ATTACH FALSEWORK AND FORMWORK DURING CONSTRUCTION.

THE PERMITTED THREADED INSERTS IN THE EXTERIOR UNITS SHALL BE SIZED BY THE CONTRACTOR, SPACED AT 4'-0" CENTERS AND GALVANIZED IN ACCORDANCE WITH SECTION 1076 OF THE STANDARD SPECIFICATIONS. STAINLESS STEEL THREADED INSERTS MAY BE USED AS AN ALTERNATE.

THE PERMITTED THREADED INSERTS SHALL BE GROUTED BY THE CONTRACTOR IMMEDIATELY FOLLOWING REMOVAL OF THE FALSEWORK.

THE COST OF THE PERMITTED THREADED INSERTS SHALL BE INCLUDED IN THE PRICE BID FOR THE PRECAST UNITS.

PROJECT NO. 17BP.8.R.133
MONTGOMERY COUNTY
STATION: 16+04.50 -L-

SHEET 1 OF 5

NORTH CAROLINA PROFESSIONAL SEAL 24939 ENGINEER BYRON E. ATKINSON
9/4/2019

DOCUMENT NOT CONSIDERED FINAL
UNLESS ALL SIGNATURES COMPLETED

MI ENGINEERING
1011 SCHAUB DRIVE, SUITE 100
RALEIGH, NC 27606
(919) 851-6606
FIRM PE NUMBER : P-0671

STATE OF NORTH CAROLINA
DEPARTMENT OF TRANSPORTATION
RALEIGH

3'-0" X 3'-3"
PRESTRESSED CONCRETE
BOX BEAM UNIT

REVISIONS						SHEET NO.
NO.	BY:	DATE:	NO.	BY:	DATE:	S-4
1			3			TOTAL SHEETS
2			4			15

DRAWN BY :	B.E. LANNING	DATE :	03/19
CHECKED BY :	B.E. ATKINSON	DATE :	03/19
DESIGN ENGINEER OF RECORD :	B.E. ATKINSON	DATE :	03/19

9/4/2019
12:55:05 PM
User: blanning
Filename: N:\NC Bridges\MI8004_CH Eng_Montgomery 123 Br. Rep\17BP8R133\Structures\401_007_17BP8R133_SMU_BBU1_610123.dgn

FIX. FIX.

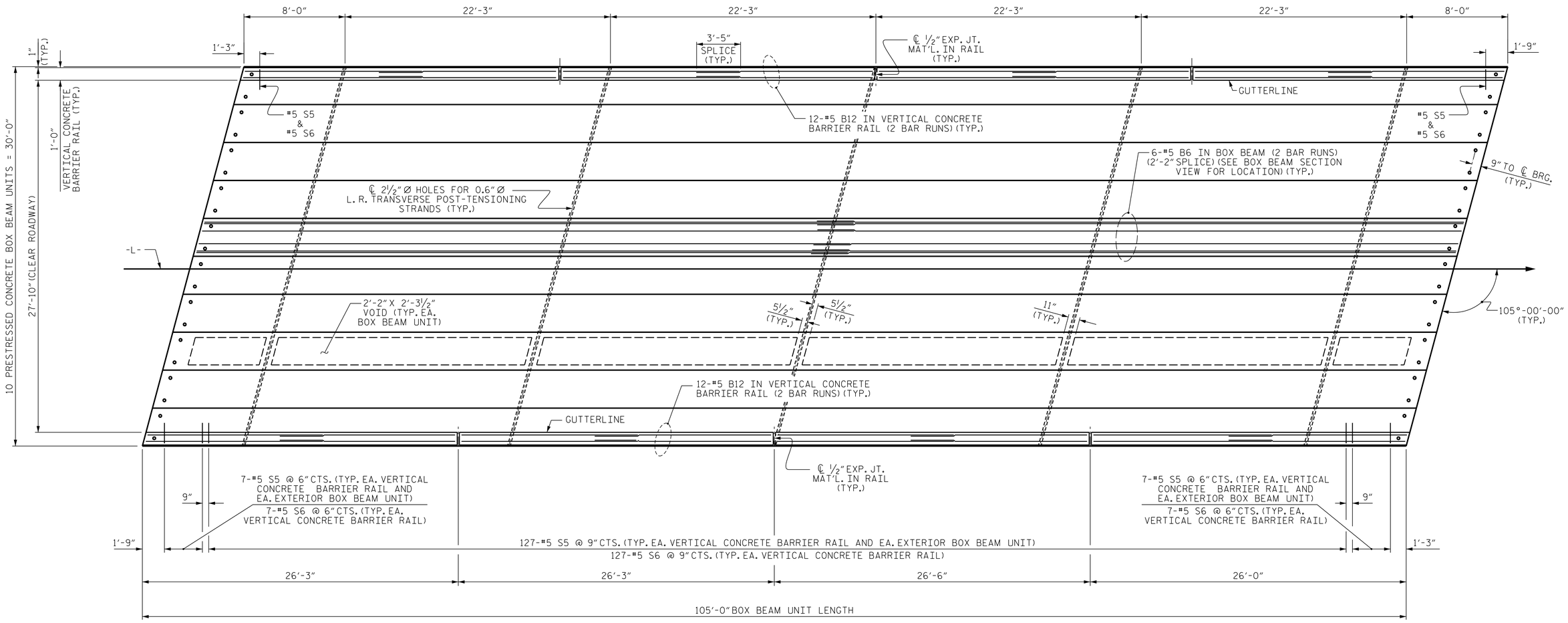

PLAN OF UNIT

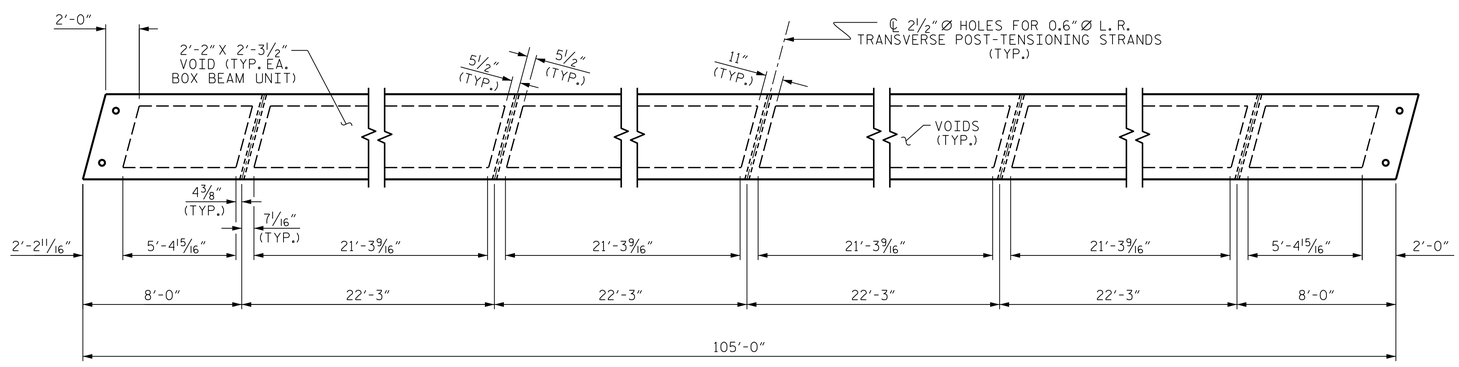

DIAPHRAGM AND VOID LAYOUT

PROJECT NO. 17BP.8.R.133
MONTGOMERY COUNTY
STATION: 16+04.50 -L-

SHEET 2 OF 5

STATE OF NORTH CAROLINA
DEPARTMENT OF TRANSPORTATION
RALEIGH

PLAN OF 100' UNIT
27'-10" CLEAR ROADWAY
105° SKEW

NORTH CAROLINA PROFESSIONAL SEAL 24939 ENGINEER BYRON E. ATKINSON
Digitally signed by Byron E. Atkinson
9/4/2019

DOCUMENT NOT CONSIDERED FINAL UNLESS ALL SIGNATURES COMPLETED

MI ENGINEERING
1011 SCHAUB DRIVE, SUITE 100
RALEIGH, NC 27606
(919) 851-6606
FIRM PE NUMBER : P-0671

REVISIONS						
NO.	BY:	DATE:	NO.	BY:	DATE:	
1			3			
2			4			

SHEET NO. S-5
TOTAL SHEETS 15

DRAWN BY :	B.E. LANNING	DATE :	03/19
CHECKED BY :	B.E. ATKINSON	DATE :	03/19
DESIGN ENGINEER OF RECORD :	B.E. ATKINSON	DATE :	03/19

9/4/2019
12:55:07 PM
User: blanning
Filename: N:\NC Bridges\MI8004_CH Eng_Montgomery 123 Br. Repl\17BP8R133\Structures\401_009_17BP8R133_SMU_BBU2_610123.dgn

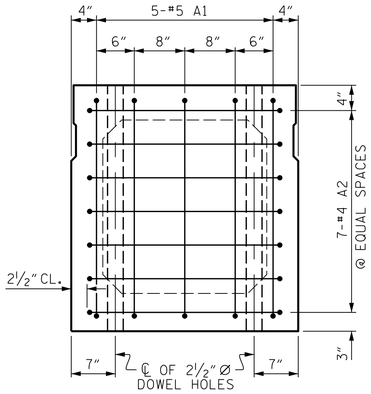

END ELEVATION

SHOWING PLACEMENT OF #5 & #4 "A" BARS AND LOCATION OF DOWEL HOLES. (INTERIOR BOX BEAM SECTION SHOWN-EXTERIOR SECTION SIMILAR EXCEPT SHEAR KEY LOCATION. STRAND LAYOUT NOT SHOWN.)

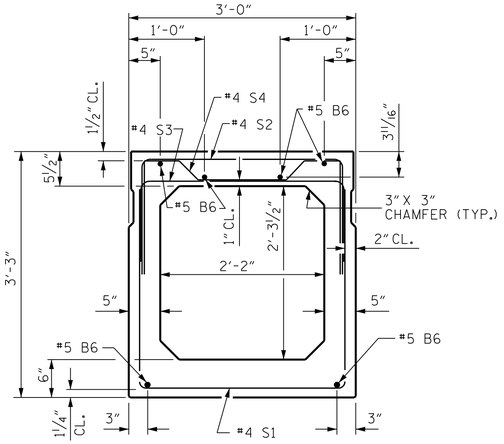

INTERIOR BOX BEAM SECTION

(STRAND LAYOUT NOT SHOWN)

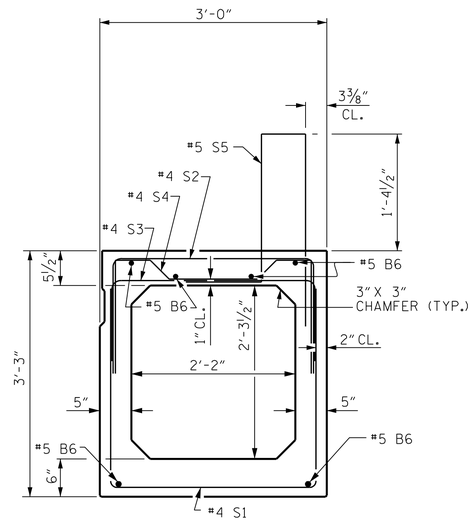

EXTERIOR BOX BEAM SECTION

(STRAND LAYOUT NOT SHOWN)

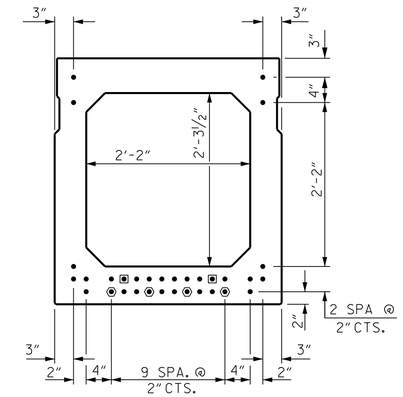

TYPICAL STRAND LOCATION

(32 STRANDS REQUIRED)

DEBONDING LEGEND

- ● FULLY BONDED STRANDS
- ◉ STRANDS DEBONDED FOR 4'-0" FROM END OF GIRDER
- ⬢ STRANDS DEBONDED FOR 12'-0" FROM END OF GIRDER

BOND SHALL BE BROKEN ON STRANDS AS SHOWN FOR THE SPECIFIED LENGTH FROM EACH END OF THE BOX BEAM. SEE STANDARD SPECIFICATIONS ARTICLE 1078-7.

BAR TYPES

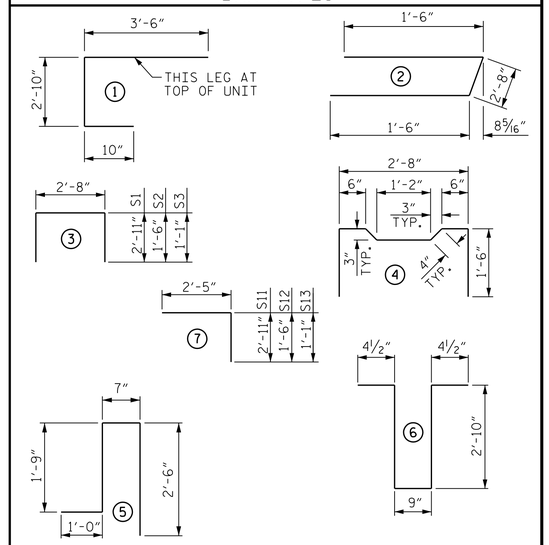

ALL BAR DIMENSIONS ARE OUT TO OUT.

BILL OF MATERIAL FOR ONE BOX BEAM SECTION

				EXTERIOR UNIT		INTERIOR UNIT	
BAR	NUMBER	SIZE	TYPE	LENGTH	WEIGHT	LENGTH	WEIGHT
A1	10	#5	1	7'-2"	75	7'-2"	75
A2	44	#4	2	5'-8"	167	5'-8"	167
B6	12	#5	STR	53'-5"	669	53'-5"	669
K1	15	#4	6	7'-2"	72	7'-2"	72
K2	10	#4	STR	2'-7"	17	2'-7"	17
S1	85	#4	3	8'-6"	483	8'-6"	483
S2	85	#4	3	5'-8"	317	5'-8"	317
S3	147	#4	3	4'-10"	475	4'-10"	475
S4	62	#4	4	5'-10"	242	5'-10"	242
S11	12	#4	7	5'-4"	43	5'-4"	43
S12	12	#4	7	3'-11"	31	3'-11"	31
S13	12	#4	7	3'-6"	28	3'-6"	28
✱ S5	141	#5	5	5'-10"	858	--	--
REINFORCING STEEL				2619	LBS.	2619	LBS.
✱ EPOXY COATED REINF. STEEL				858	LBS.		
7500 P.S.I. CONCRETE				20.5	CU. YDS.	20.3	CU. YDS.
0.6" Ø L.R. STRANDS				No. 32		No. 32	

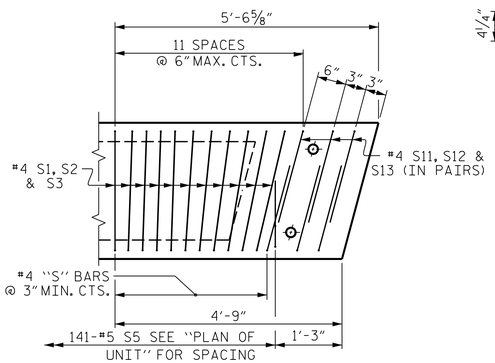

DETAIL "B"

EXTERIOR UNIT SHOWN, INTERIOR UNIT SIMILAR EXCEPT OMIT #5 S5 BARS. "B" BARS AND "A" BARS NOT SHOWN.

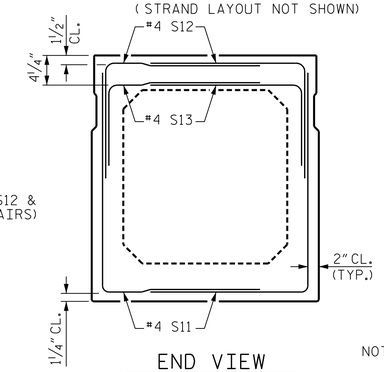

END VIEW

(SHOWING #4 "S" BARS IN END OF BEAM)

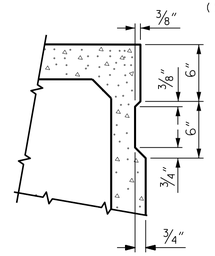

SHEAR KEY DETAIL

NOTE: OMIT SHEAR KEY ON OUTSIDE FACE OF EXTERIOR BOX BEAMS.

GRADE 270 STRANDS	
	0.6" Ø L.R.
AREA (SQUARE INCHES)	0.217
ULTIMATE STRENGTH (LBS. PER STRAND)	58,600
APPLIED PRESTRESS (LBS. PER STRAND)	43,950

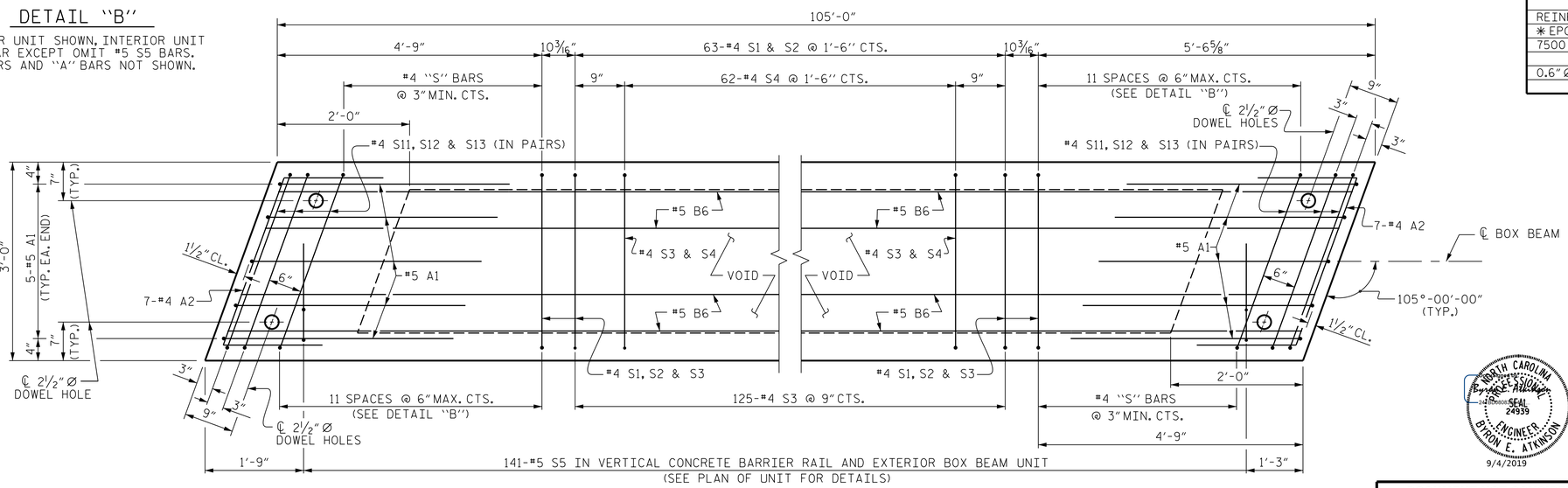

PLAN OF BOX BEAM

EXTERIOR UNIT SHOWN, INTERIOR UNIT SIMILAR EXCEPT OMIT #5 S5 BARS.
FOR LOCATION OF DIAPHRAGMS, SEE "PLAN OF UNIT".
FOR THREADED INSERTS, SEE "THREADED INSERT DETAIL".
FOR REINFORCING STEEL IN DIAPHRAGMS, SEE "DOUBLE DIAPHRAGM DETAILS".

PROJECT NO. 17BP.8.R.133
MONTGOMERY COUNTY
STATION: 16+04.50 -L-

SHEET 3 OF 5

STATE OF NORTH CAROLINA
DEPARTMENT OF TRANSPORTATION
RALEIGH

3'-0" X 3'-3" PRESTRESSED CONCRETE BOX BEAM UNIT

NORTH CAROLINA PROFESSIONAL SEAL 24939 ENGINEER BYRON E. ATKINSON
9/4/2019

DOCUMENT NOT CONSIDERED FINAL UNLESS ALL SIGNATURES COMPLETED

MI ENGINEERING
1011 SCHAUB DRIVE, SUITE 100
RALEIGH, NC 27606
(919) 851-6606
FIRM PE NUMBER : P-0671

REVISIONS							SHEET NO.
NO.	BY:	DATE:	NO.	BY:	DATE:		S-6
1			3				TOTAL SHEETS
2			4				15

DRAWN BY : B.E. LANNING	DATE : 03/19		
CHECKED BY : B.E. ATKINSON	DATE : 03/19		
DESIGN ENGINEER OF RECORD : B.E. ATKINSON	DATE : 03/19		

9/4/2019
12:55:10 PM
User: blanning
Filename: N:\NC Bridges\MI8004_CH Eng_Montgomery 123 Br. Repl\17BP8R133\Structures\401_011_17BP8R133_SMU_BBU3_610123.dgn

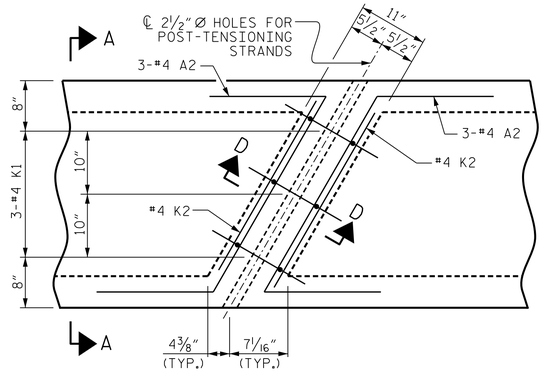

PLAN

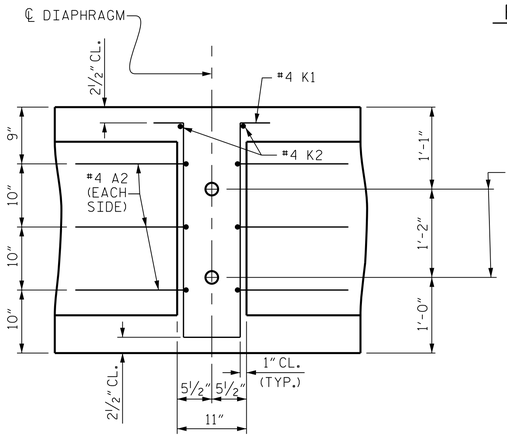

SECTION D-D

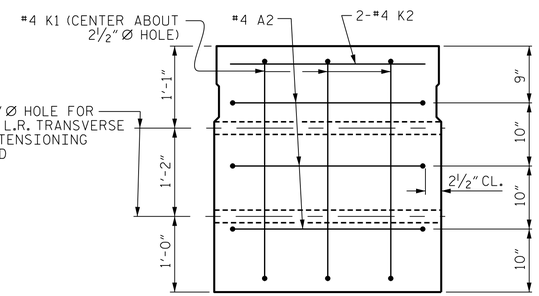

SECTION A-A

VOIDS NOT SHOWN

DOUBLE DIAPHRAGM DETAILS

#4 "S" BARS NOT SHOWN. #4 "S" BARS MAY BE SHIFTED SLIGHTLY TO CLEAR 2½" Ø HOLE.

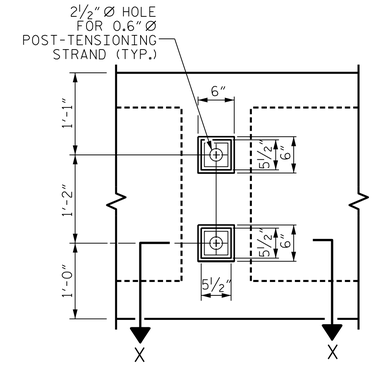

VIEW Y-Y

SHOWING ELEVATION VIEW OF GROUTED RECESS

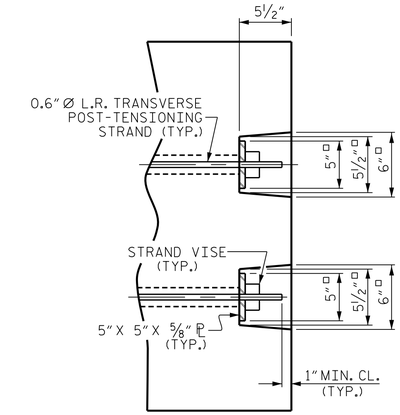

DETAIL "C"

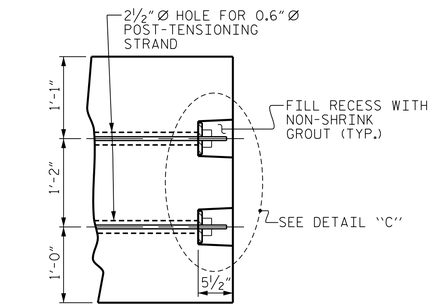

PART SECTION AT RECESS

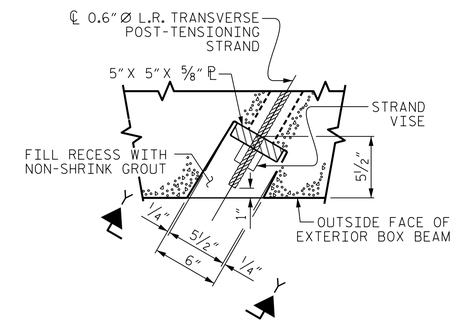

SECTION X-X

SHOWING PLAN VIEW OF GROUTED RECESS

GROUTED RECESS DETAIL AT END OF POST-TENSIONED STRANDS OF EXTERIOR BOX BEAM

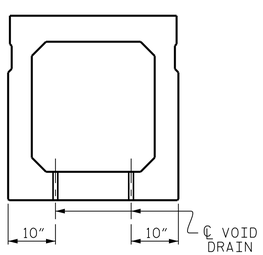

SECTION B-B

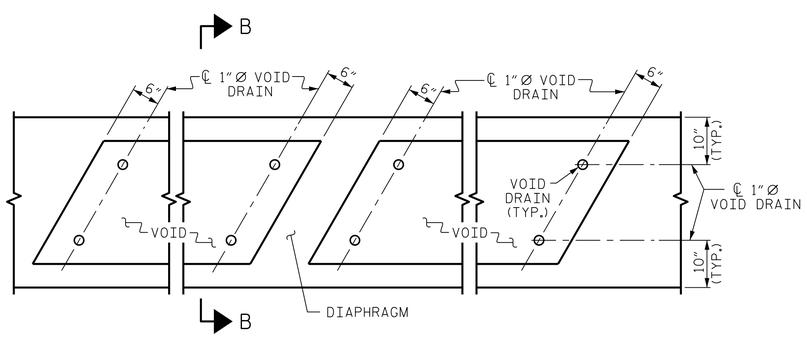

PART PLAN

VOID DRAIN DETAILS

(DIMENSIONS SHOWN ARE TYPICAL FOR EACH VOID)

DEAD LOAD DEFLECTION AND CAMBER	
	3'-0" x 3'-3"
105' BOX BEAM UNIT	0.6"Ø L.R. STRAND
CAMBER (SLAB ALONE IN PLACE)	1¾" ↑
DEFLECTION DUE TO SUPERIMPOSED DEAD LOAD**	1¼" ↓
FINAL CAMBER	½" ↑

** INCLUDES FUTURE WEARING SURFACE

PROJECT NO. 17BP.8.R.133

MONTGOMERY COUNTY

STATION: 16+04.50 -L-

SHEET 4 OF 5

NORTH CAROLINA PROFESSIONAL SEAL 24939 ENGINEER BYRON E. ATKINSON

9/4/2019

STATE OF NORTH CAROLINA
DEPARTMENT OF TRANSPORTATION
RALEIGH

3'-0" X 3'-3"
PRESTRESSED CONCRETE
BOX BEAM UNIT

DOCUMENT NOT CONSIDERED FINAL UNLESS ALL SIGNATURES COMPLETED

MI ENGINEERING
1011 SCHAUB DRIVE, SUITE 100
RALEIGH, NC 27606
(919) 851-6606
FIRM PE NUMBER : P-0671

REVISIONS						SHEET NO.
NO.	BY:	DATE:	NO.	BY:	DATE:	S-7
1			3			TOTAL SHEETS
2			4			15

DRAWN BY :	B.E. LANNING	DATE :	03/19
CHECKED BY :	B.E. ATKINSON	DATE :	03/19
DESIGN ENGINEER OF RECORD :	B.E. ATKINSON	DATE :	03/19

9/4/2019
12:55:12 PM
User: blanning
Filename: N:\NC Bridges\MI8004_CH Eng_Montgomery 123 Br. Rep\17BP8R133\Structures\401_013_17BP8R133_SMU_BBU4_610123.dgn

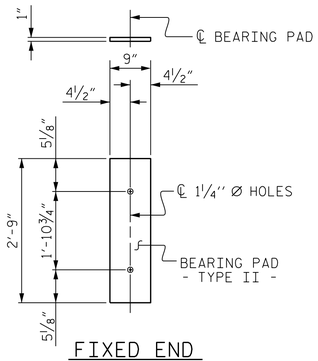

FIXED END

(TYPE II - 20 REQ'D.)

ELASTOMERIC BEARING DETAILS

ELASTOMER IN ALL BEARINGS SHALL BE 60 DUROMETER HARDNESS.

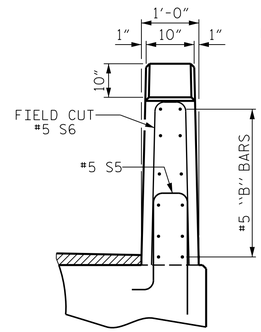

END VIEW

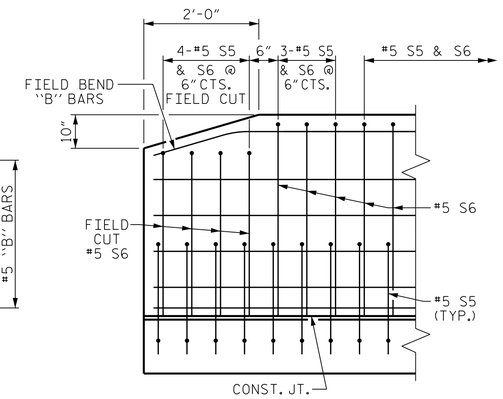

SIDE VIEW

END OF RAIL DETAILS

BOX BEAM UNITS REQUIRED			
	NUMBER	LENGTH	TOTAL LENGTH
EXTERIOR B.B.	2	105'-0"	210'-0"
INTERIOR B.B.	8	105'-0"	840'-0"
TOTAL	10	———	1050'-0"

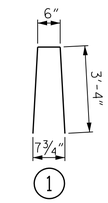

BAR TYPE

BAR DIMENSIONS ARE OUT TO OUT.

BILL OF MATERIAL FOR VERTICAL CONCRETE BARRIER RAIL					
BAR	BARS PER PAIR OF EXTERIOR UNITS	SIZE	TYPE	LENGTH	WEIGHT
	105' UNIT				
✳B12	192	#5	STR	14'-9"	2954
✳ S6	282	#5	1	7'-2"	2108
✳ EPOXY COATED REINFORCING STEEL			LBS.		5062
CLASS AA CONCRETE			CU.YDS.		27.3
TOTAL VERTICAL CONCRETE BARRIER RAIL			LN. FT.		210.0

GUTTERLINE ASPHALT THICKNESS & RAIL HEIGHT		
	ASPHALT OVERLAY THICKNESS @ MID-SPAN	RAIL HEIGHT @ MID-SPAN
105' UNITS	3"	3'-9"

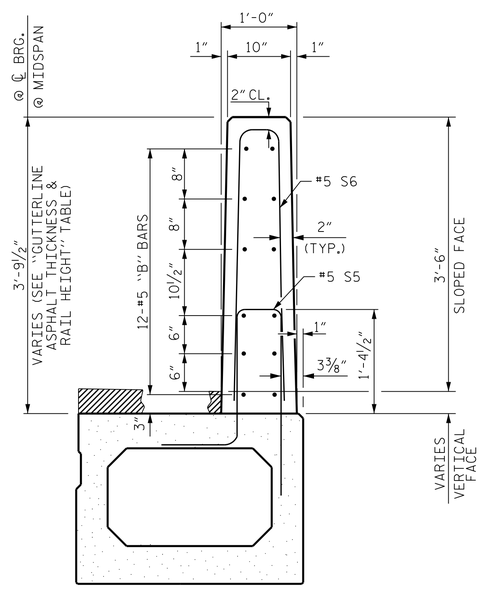

SECTION THRU RAIL

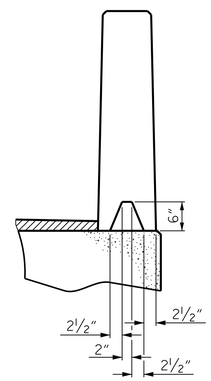

SECTION S-S

AT DAM IN OPEN JOINT
(THIS IS TO BE USED ONLY
WHEN SLIP FORM IS USED)

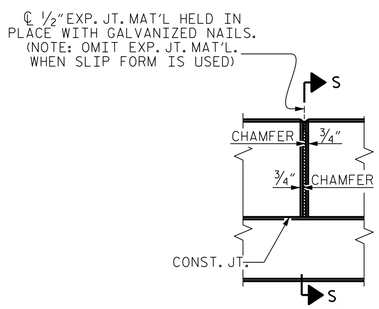

ELEVATION AT EXPANSION JOINTS

VERTICAL CONCRETE BARRIER RAIL DETAILS

PROJECT NO. 17BP.8.R.133

MONTGOMERY COUNTY

STATION: 16+04.50 -L-

SHEET 5 OF 5

STATE OF NORTH CAROLINA
DEPARTMENT OF TRANSPORTATION
RALEIGH

3'-0" X 3'-3"
PRESTRESSED CONCRETE
BOX BEAM UNIT

NORTH CAROLINA PROFESSIONAL ENGINEER SEAL 24939 ENGINEER BYRON E. ATKINSON

9/4/2019

DOCUMENT NOT CONSIDERED FINAL UNLESS ALL SIGNATURES COMPLETED

MI ENGINEERING
1011 SCHAUB DRIVE, SUITE 100
RALEIGH, NC 27606
(919) 851-6606
FIRM PE NUMBER : P-0671

REVISIONS						
NO.	BY:	DATE:	NO.	BY:	DATE:	
1			3			
2			4			

SHEET NO. S-8

TOTAL SHEETS 15

DRAWN BY :	B.E. LANNING	DATE :	03/19
CHECKED BY :	B.E. ATKINSON	DATE :	03/19
DESIGN ENGINEER OF RECORD :	B.E. ATKINSON	DATE :	03/19

9/4/2019
12:55:14 PM
User: blanning
Filename: N:\NC Bridges\MI8004_CH Eng_Montgomery 123 Br. Rep\17BP8R133\Structures\401_015_17BP8R133_SMU_BBU5_610123.dgn

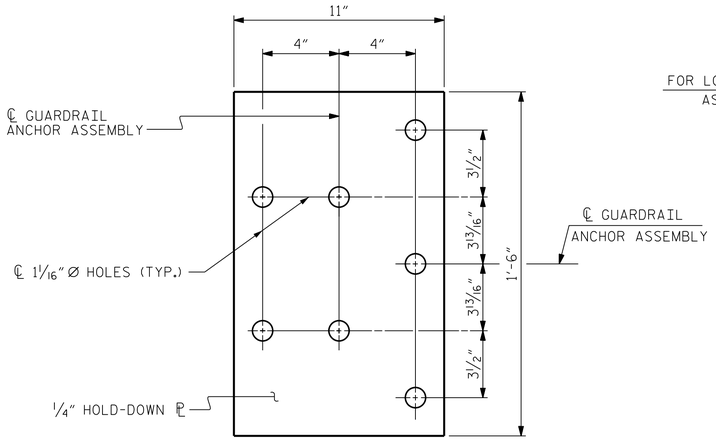

PLAN

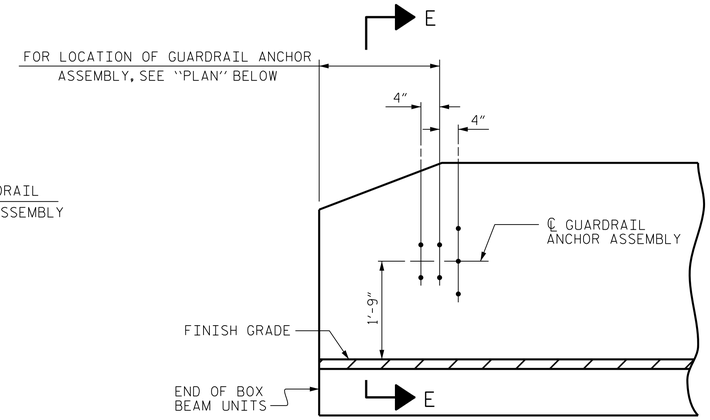

ELEVATION

NOTES

THE GUARDRAIL ANCHOR ASSEMBLY SHALL CONSIST OF A 1/4" HOLD DOWN PLATE AND 7 - 7/8" Ø BOLTS WITH NUTS AND WASHERS.

THE HOLD-DOWN PLATE SHALL CONFORM TO AASHTO M270 GRADE 36. AFTER FABRICATION, THE HOLD-DOWN PLATE SHALL BE HOT-DIP GALVANIZED IN ACCORDANCE WITH AASHTO M111.

BOLTS SHALL CONFORM TO THE REQUIREMENTS OF ASTM A307 AND NUTS SHALL CONFORM TO THE REQUIREMENTS OF AASHTO M291. BOLTS, NUTS AND WASHERS SHALL BE GALVANIZED. (AT THE CONTRACTOR'S OPTION, STAINLESS STEEL BOLTS, NUTS AND WASHERS MAY BE USED AS AN ALTERNATE FOR THE 7/8" Ø GALVANIZED BOLTS, NUTS AND WASHERS. THEY SHALL CONFORM TO OR EXCEED THE MECHANICAL REQUIREMENTS OF ASTM A307. THE USE OF THIS ALTERNATE SHALL BE APPROVED BY THE ENGINEER.)

THE GUARDRAIL ANCHOR ASSEMBLY IS REQUIRED AT ALL POINTS WHERE APPROACH GUARDRAIL IS TO BE ATTACHED TO THE END OF BARRIER RAIL. FOR POINTS OF ATTACHMENT, SEE SKETCH.

AFTER INSTALLATION, THE EXPOSED THREAD OF THE BOLT SHALL BE BURRED WITH A SHARP POINTED TOOL.

THE COST OF THE GUARDRAIL ANCHOR ASSEMBLY SHALL BE INCLUDED IN THE UNIT CONTRACT PRICE BID FOR VERTICAL CONCRETE BARRIER RAIL.

THE VERTICAL REINFORCING BARS MAY BE SHIFTED SLIGHTLY IN THE VERTICAL CONCRETE BARRIER RAIL TO CLEAR ASSEMBLY BOLTS.

THE 1 1/4" Ø HOLES SHALL BE FORMED OR DRILLED WITH A CORE BIT. IMPACT TOOLS WILL NOT BE PERMITTED. ANY CONCRETE DAMAGED BY THIS WORK SHALL BE REPAIRED TO THE SATISFACTION OF THE ENGINEER.

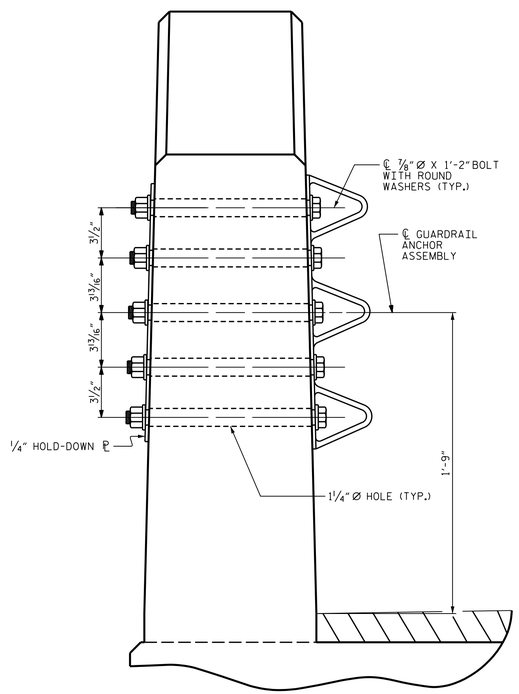

SECTION E-E

GUARDRAIL ANCHOR ASSEMBLY DETAILS

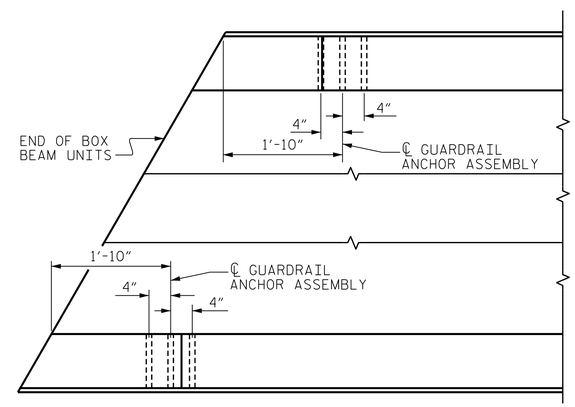

PLAN

LOCATION OF ANCHORS FOR GUARDRAIL

END BENT 1 SHOWN, END BENT 2 SIMILAR.

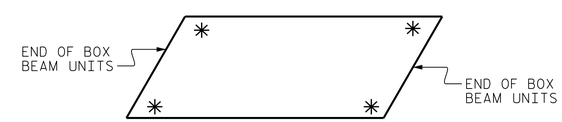

SKETCH SHOWING POINTS OF ATTACHMENT

✳ DENOTES GUARDRAIL ANCHOR ASSEMBLY

PROJECT NO. 17BP.8.R.133

MONTGOMERY COUNTY

STATION: 16+04.50 -L-

9/4/2019

STATE OF NORTH CAROLINA
DEPARTMENT OF TRANSPORTATION
RALEIGH

STANDARD
GUARDRAIL ANCHORAGE DETAILS FOR VERTICAL CONCRETE BARRIER RAIL

DOCUMENT NOT CONSIDERED FINAL UNLESS ALL SIGNATURES COMPLETED

MI ENGINEERING
1011 SCHAUB DRIVE, SUITE 100
RALEIGH, NC 27606
(919) 851-6606
FIRM PE NUMBER : P-0671

REVISIONS						SHEET NO.
NO.	BY:	DATE:	NO.	BY:	DATE:	S-9
1			3			TOTAL SHEETS
2			4			15

(SHT 1a)

STD. NO. GRA3

ASSEMBLED BY:	B.E. LANNING	DATE:	03/19
CHECKED BY :	B.E. ATKINSON	DATE:	03/19
DESIGN ENGINEER OF RECORD:	B.E. ATKINSON	DATE:	03/19
DRAWN BY : MAA 5/10	REV. 1/15	MAA/TMG	
CHECKED BY : GM 5/10	REV. 12/17	MAA/THC	
	REV. 5/18	MAA/THC	

9/4/2019
12:55:16 PM
User: blanning
Filename: N:\NC Bridges\MI8004_CH Eng_Montgomery 123 Br. Rep\17BP8R133\Structures\401_017_17BP8R133_SMU_GRA1_610123.dgn

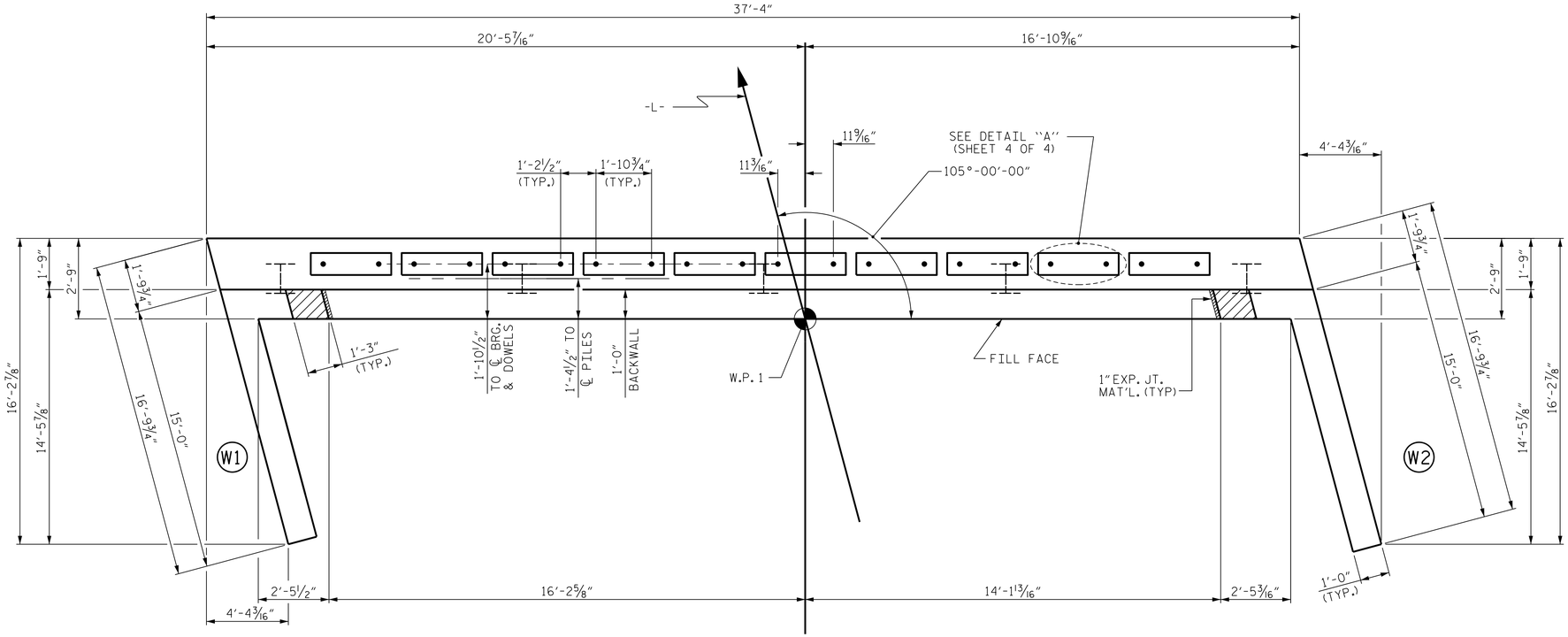

PLAN

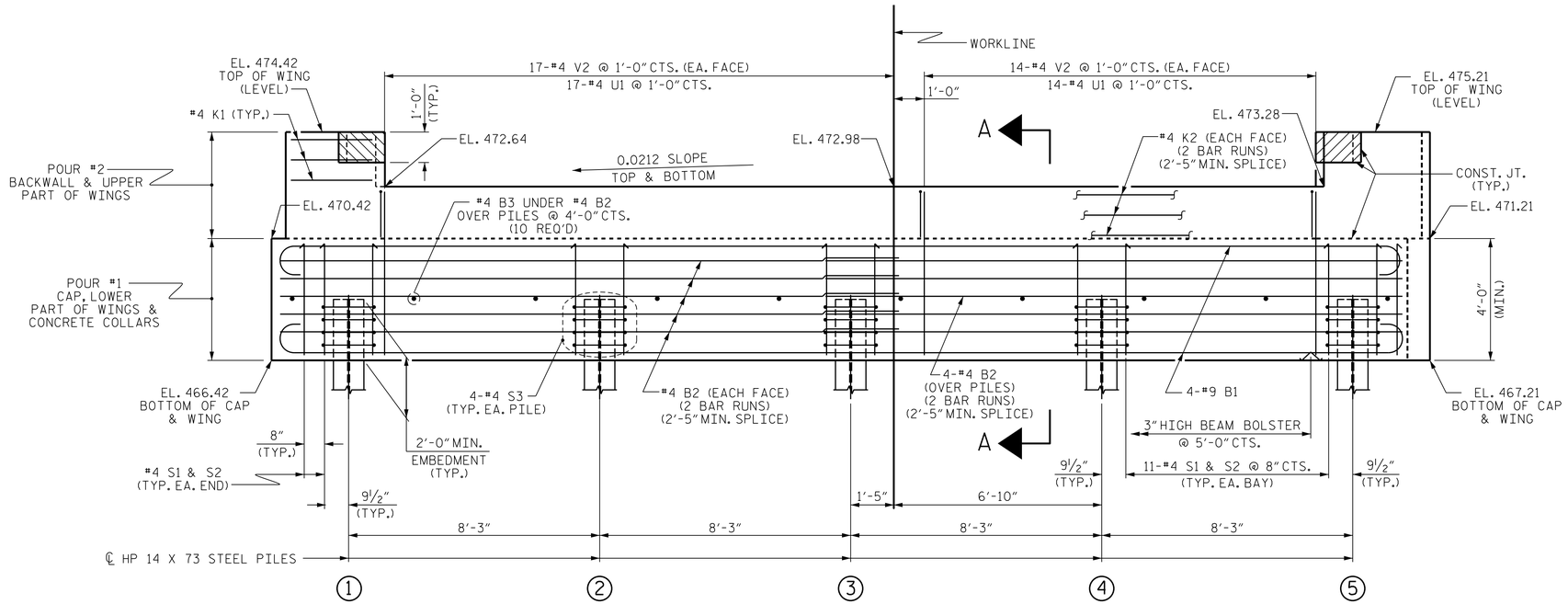

ELEVATION

WINGS NOT SHOWN FOR CLARITY.
FOR SECTION A-A, SEE SHEET 4 OF 4.
CONCRETE COLLARS FOR STEEL PILES NOT SHOWN IN PLAN AND ELEVATION VIEWS FOR CLARITY.
SEE "CORROSION PROTECTION FOR STEEL PILES DETAIL", SHEET 4 OF 4.

NOTES

STIRRUPS IN CAP MAY BE SHIFTED AS NECESSARY TO CLEAR DOWELS.

THE CONCRETE IN THE SHADED AREA OF THE WING SHALL BE POURED AFTER THE VERTICAL CONCRETE BARRIER RAIL IS CAST IF SLIP FORMING IS USED.

FOR PILE SPLICE DETAILS, SEE SHEET 4 OF 4.

FOR WING DETAILS, SEE SHEET 3 OF 4.

TOP OF PILE ELEVATIONS	
1	468.49
2	468.66
3	468.84
4	469.01
5	469.18

PROJECT NO. 17BP.8.R.133
MONTGOMERY COUNTY
STATION: 16+04.50 -L-

SHEET 1 OF 4

STATE OF NORTH CAROLINA
DEPARTMENT OF TRANSPORTATION
RALEIGH

SUBSTRUCTURE

END BENT No. 1

NORTH CAROLINA PROFESSIONAL SEAL 24939 ENGINEER BYRON E. ATKINSON
9/4/2019

DOCUMENT NOT CONSIDERED FINAL UNLESS ALL SIGNATURES COMPLETED

MI ENGINEERING
1011 SCHAUB DRIVE, SUITE 100
RALEIGH, NC 27606
(919) 851-6606
FIRM PE NUMBER : P-0671

REVISIONS							
NO.	BY:	DATE:	NO.	BY:	DATE:	SHEET NO.	S-10
1			3			TOTAL SHEETS	15
2			4				

DRAWN BY :	B.E. LANNING	DATE :	03/19
CHECKED BY :	B.E. ATKINSON	DATE :	03/19
DESIGN ENGINEER OF RECORD :	B.E. ATKINSON	DATE :	03/19

9/4/2019
12:55:18 PM
User: blanning
Filename: N:\NC Bridges\MI8004_CH Eng_Montgomery 123 Br. Rep\17BP8R133\Structures\401_019_17BP8R133_SMU_EB1_610123.dgn

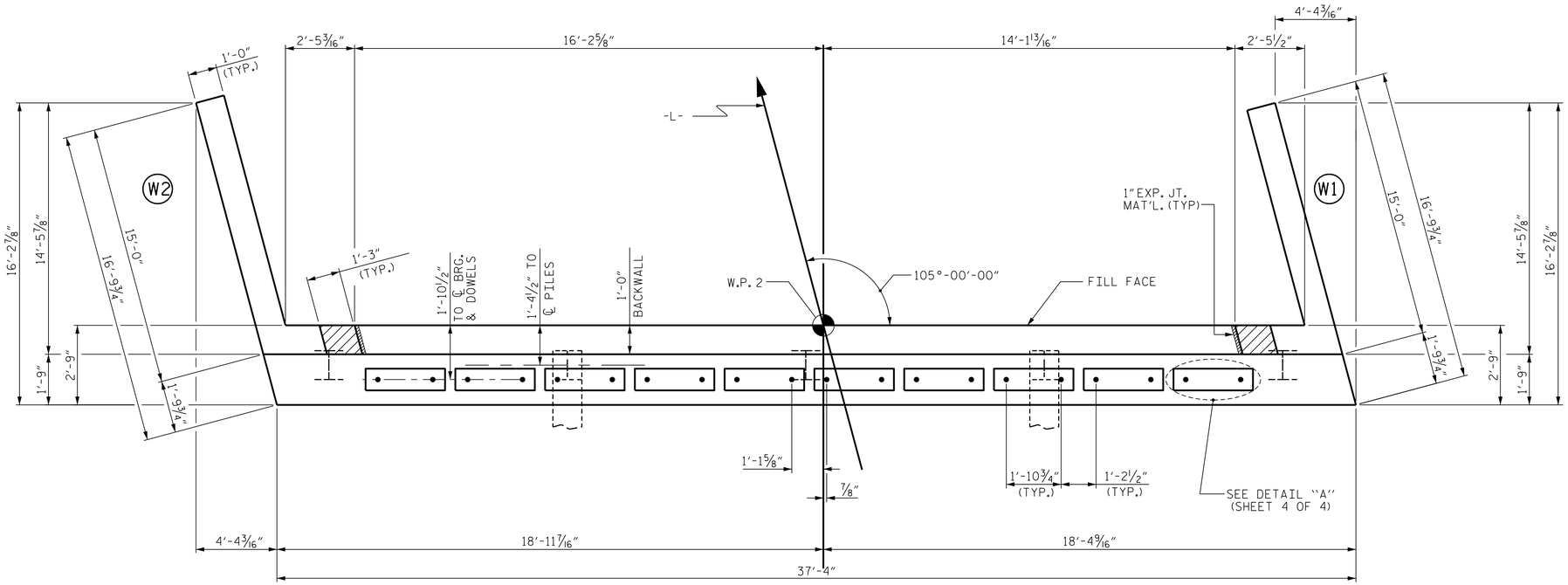

PLAN

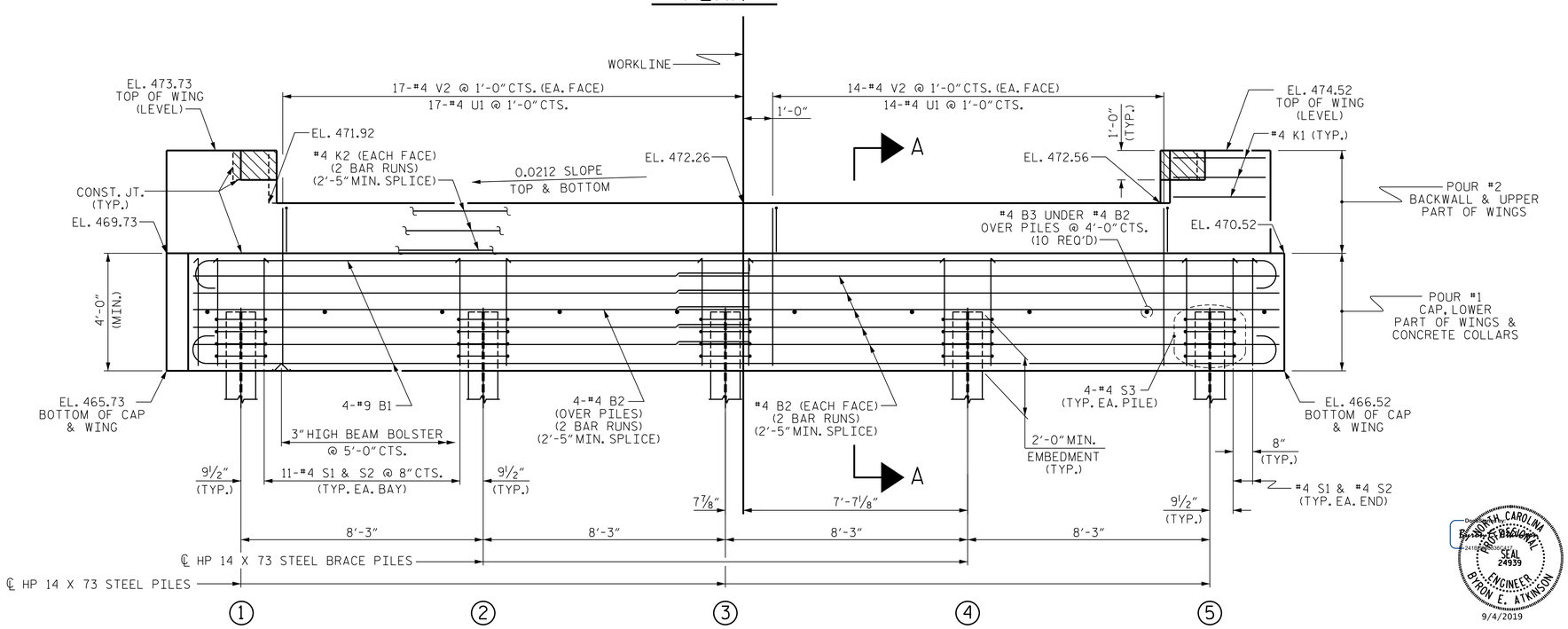

ELEVATION

WINGS NOT SHOWN FOR CLARITY.
FOR SECTION A-A, SEE SHEET 4 OF 4.
CONCRETE COLLARS FOR STEEL PILES NOT SHOWN IN PLAN AND ELEVATION VIEWS FOR CLARITY.
SEE "CORROSION PROTECTION FOR STEEL PILES DETAIL", SHEET 4 OF 4.

NOTES

STIRRUPS IN CAP MAY BE SHIFTED AS NECESSARY TO CLEAR DOWELS.

THE CONCRETE IN THE SHADED AREA OF THE WING SHALL BE POURED AFTER THE VERTICAL CONCRETE BARRIER RAIL IS CAST IF SLIP FORMING IS USED.

FOR PILE SPLICE DETAILS, SEE SHEET 4 OF 4.

FOR WING DETAILS, SEE SHEET 3 OF 4.

TOP OF PILE ELEVATIONS	
1	467.78
2	467.96
3	468.13
4	468.30
5	468.48

PROJECT NO. 17BP.8.R.133
MONTGOMERY COUNTY
STATION: 16+04.50 -L-

SHEET 2 OF 4

STATE OF NORTH CAROLINA
DEPARTMENT OF TRANSPORTATION
RALEIGH

SUBSTRUCTURE

END BENT No. 2

NORTH CAROLINA PROFESSIONAL SEAL 24939 ENGINEER BYRON E. ATKINSON
9/4/2019

DOCUMENT NOT CONSIDERED FINAL UNLESS ALL SIGNATURES COMPLETED

MI ENGINEERING
1011 SCHAUB DRIVE, SUITE 100
RALEIGH, NC 27606
(919) 851-6606
FIRM PE NUMBER : P-0671

REVISIONS							
NO.	BY:	DATE:	NO.	BY:	DATE:	SHEET NO.	S-11
1			3			TOTAL SHEETS	15
2			4				

DRAWN BY :	B.E. LANNING	DATE :	03/19
CHECKED BY :	B.E. ATKINSON	DATE :	03/19
DESIGN ENGINEER OF RECORD :	B.E. ATKINSON	DATE :	03/19

9/4/2019
12:55:20 PM
User: blanning
Filename: N:\NC Bridges\MI8004_CH Eng_Montgomery 123 Br_Rep\17BP8R133\Structures\401_021_17BP8R133_SMU_EB2_610123.dgn

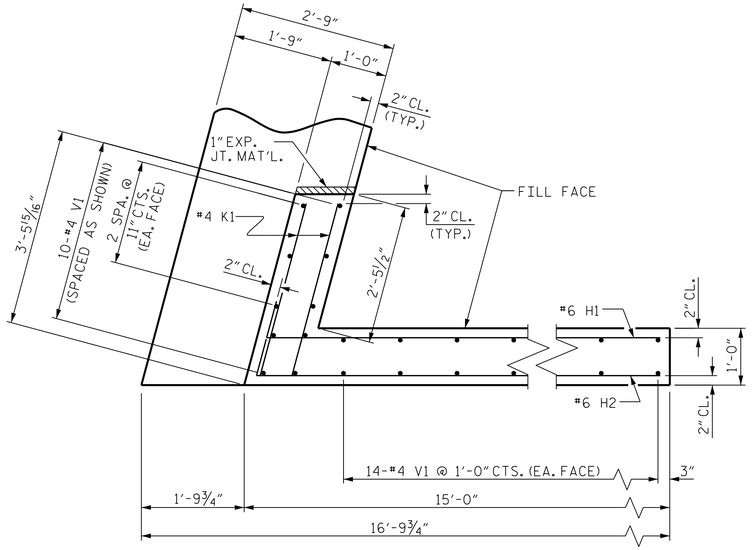

PLAN OF WING (W1)

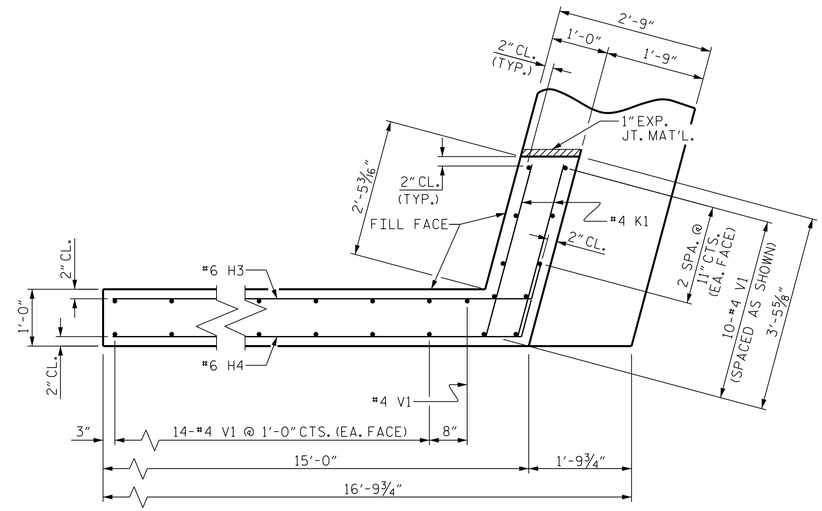

PLAN OF WING (W2)

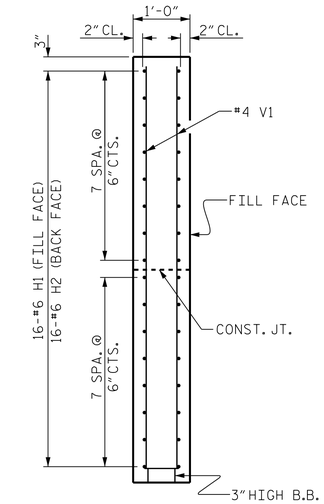

SECTION X-X

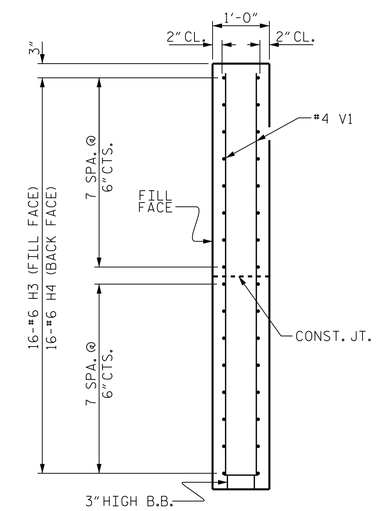

SECTION Y-Y

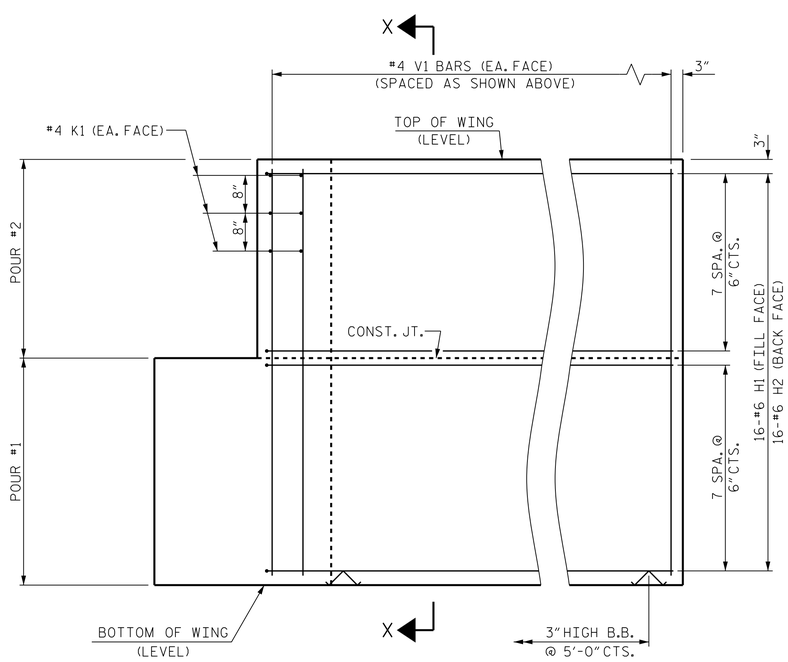

ELEVATION OF WING (W1)

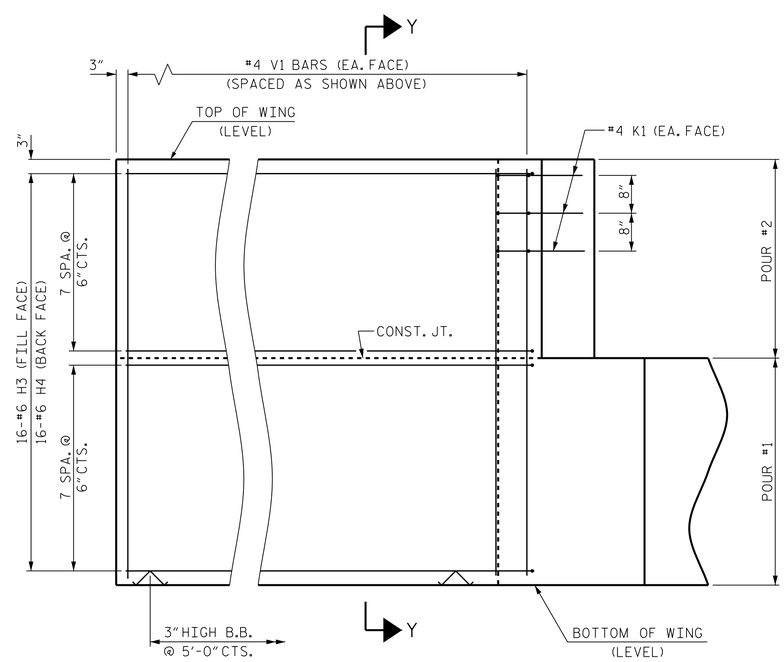

ELEVATION OF WING (W2)

WING DETAILS

PROJECT NO. 17BP.8.R.133

MONTGOMERY COUNTY

STATION: 16+04.50 -L-

SHEET 3 OF 4

STATE OF NORTH CAROLINA
DEPARTMENT OF TRANSPORTATION
RALEIGH

SUBSTRUCTURE

END BENT
WING DETAILS

NORTH CAROLINA PROFESSIONAL SEAL 24939 ENGINEER BYRON E. ATKINSON
9/4/2019

DOCUMENT NOT CONSIDERED FINAL UNLESS ALL SIGNATURES COMPLETED

MI ENGINEERING
1011 SCHAUB DRIVE, SUITE 100
RALEIGH, NC 27606
(919) 851-6606
FIRM PE NUMBER : P-0671

REVISIONS							SHEET NO.
NO.	BY:	DATE:	NO.	BY:	DATE:		S-12
1			3				TOTAL SHEETS
2			4				15

DRAWN BY :	B.E. LANNING	DATE :	03/19
CHECKED BY :	B.E. ATKINSON	DATE :	03/19
DESIGN ENGINEER OF RECORD :	B.E. ATKINSON	DATE :	03/19

9/4/2019
12:55:22 PM
User: blanning
Filename: N:\NC Bridges\M18004_CH Eng_Montgomery 123 Br. Rep\17BP8R133\Structures\401_023_17BP8R133_SMU_EB3_610123.dgn

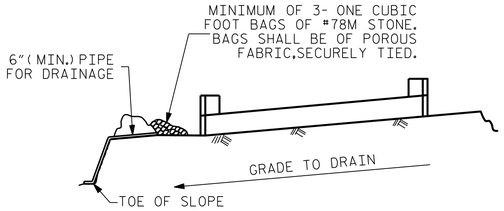

BAGGED STONE AND PIPE SHALL BE PLACED IMMEDIATELY AFTER COMPLETION OF END BENT EXCAVATION. PIPE MAY BE EITHER CONCRETE, CORRUGATED STEEL, CORRUGATED ALUMINUM ALLOY, OR CORRUGATED PLASTIC. PERFORATED PIPE WILL NOT BE ALLOWED.

BAGGED STONE SHALL REMAIN IN PLACE UNTIL THE ENGINEER DIRECTS THAT IT BE REMOVED. THE CONTRACTOR SHALL REMOVE AND DISPOSE OF SILT ACCUMULATIONS AT BAGGED STONE WHEN SO DIRECTED BY THE ENGINEER. BAGS SHALL BE REMOVED AND REPLACED WHENEVER THE ENGINEER DETERMINES THAT THEY HAVE DETERIORATED AND LOST THEIR EFFECTIVENESS.

NO SEPARATE PAYMENT WILL BE MADE FOR THIS WORK AND THE ENTIRE COST OF THIS WORK SHALL BE INCLUDED IN THE UNIT CONTRACT PRICE BID FOR THE SEVERAL PAY ITEMS.

TEMPORARY DRAINAGE AT END BENT

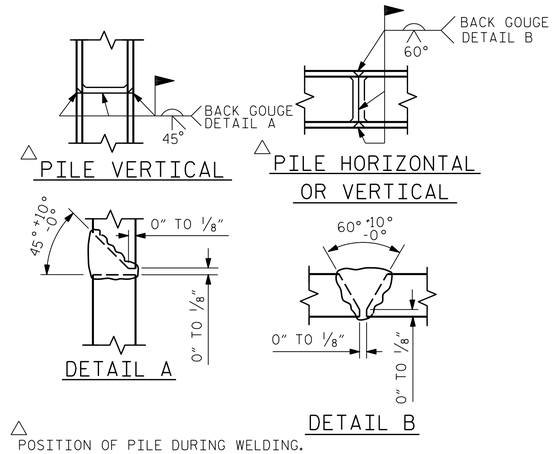

△ POSITION OF PILE DURING WELDING.

PILE SPLICE DETAILS

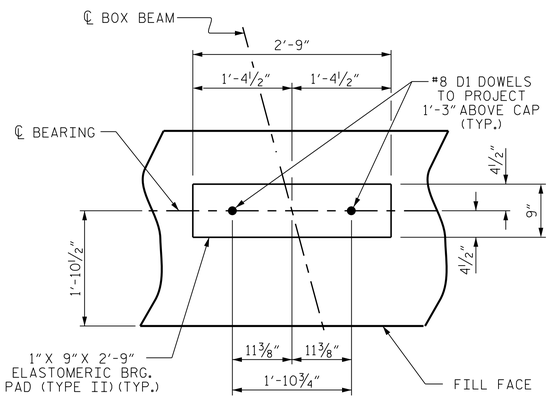

DETAIL "A"

(END BENT No. 1 SHOWN, END BENT No. 2 SIMILAR BY ROTATION)

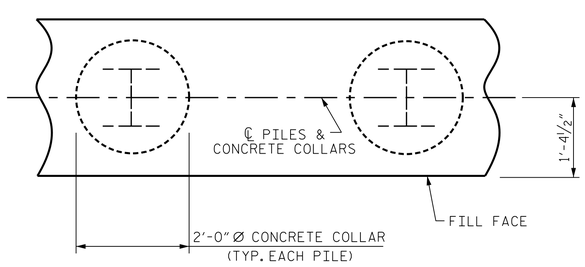

PLAN

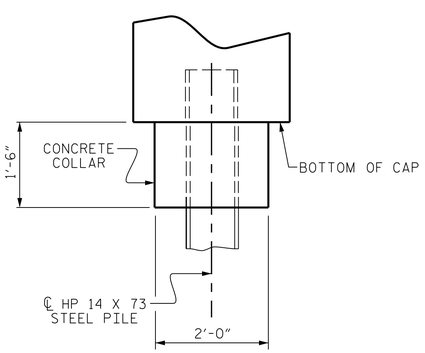

ELEVATION

CORROSION PROTECTION FOR STEEL PILES DETAIL

(END BENT No. 1 SHOWN, END BENT No. 2 SIMILAR BY ROTATION)

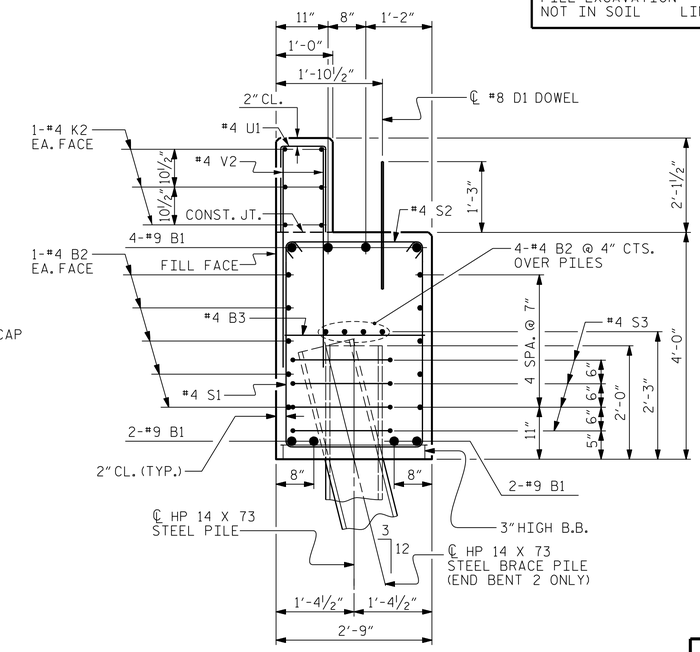

SECTION A-A

(CONCRETE COLLAR NOT SHOWN FOR CLARITY. SEE "CORROSION PROTECTION FOR STEEL PILES DETAIL.")
(END BENT 2 SHOWN, END BENT 1 SIMILAR)

BAR TYPES

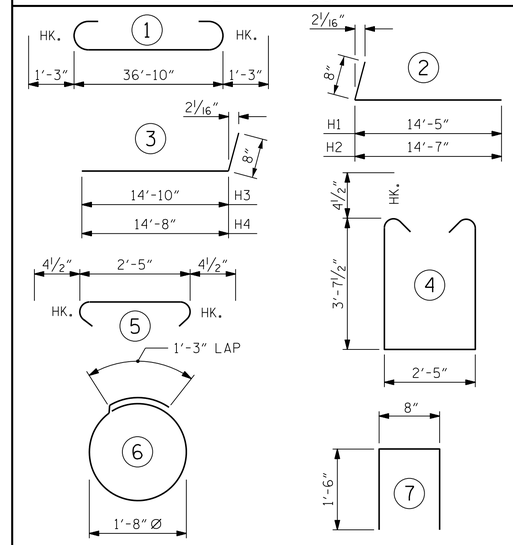

ALL BAR DIMENSIONS ARE OUT TO OUT.

END BENT No. 1	END BENT No. 2
HP 14 X 73 STEEL PILES	HP 14 X 73 STEEL PILES
NO: 5 LIN. FT.= 75	NO: 5 LIN. FT.= 75
PILE DRIVING EQUIPMENT SETUP FOR HP 14 X 73 STEEL PILES NO: 5	PILE DRIVING EQUIPMENT SETUP FOR HP 14 X 73 STEEL PILES NO: 5
PILE EXCAVATION IN SOIL LIN. FT. = 50.0	STEEL PILE POINTS NO: 5
PILE EXCAVATION NOT IN SOIL LIN. FT. = 6.0	

BILL OF MATERIAL
FOR ONE END BENT

BAR	NO.	SIZE	TYPE	LENGTH	WEIGHT
B1	8	#9	1	39'-4"	1070
B2	28	#4	STR	19'-9"	369
B3	10	#4	STR	2'-5"	16
D1	20	#8	STR	2'-3"	120
H1	16	#6	2	15'-1"	362
H2	16	#6	2	15'-3"	366
H3	16	#6	3	15'-6"	372
H4	16	#6	3	15'-4"	368
K1	12	#4	STR	3'-1"	25
K2	12	#4	STR	19'-9"	158
S1	48	#4	4	10'-5"	334
S2	48	#4	5	3'-2"	102
S3	20	#4	6	6'-6"	87
U1	31	#4	7	3'-8"	76
V1	77	#4	STR	7'-8"	394
V2	62	#4	STR	5'-9"	238

REINFORCING STEEL (FOR ONE END BENT) 4457 LBS.

CLASS A CONCRETE BREAKDOWN (FOR ONE END BENT)

POUR #1	CAP, LOWER PART OF WINGS & COLLARS	20.3 C.Y.
POUR #2	BACKWALL & UPPER PART OF WINGS	7.6 C.Y.
TOTAL CLASS A CONCRETE		27.9 C.Y.

PROJECT NO. 17BP.8.R.133
MONTGOMERY COUNTY
STATION: 16+04.50 -L-

SHEET 4 OF 4

STATE OF NORTH CAROLINA
DEPARTMENT OF TRANSPORTATION
RALEIGH

SUBSTRUCTURE

END BENT No. 1 & 2 DETAILS

NORTH CAROLINA PROFESSIONAL SEAL 24939 ENGINEER BYRON E. ATKINSON
9/4/2019

DOCUMENT NOT CONSIDERED FINAL UNLESS ALL SIGNATURES COMPLETED

MI ENGINEERING
1011 SCHAUB DRIVE, SUITE 100
RALEIGH, NC 27606
(919) 851-6606
FIRM PE NUMBER : P-0671

REVISIONS								SHEET NO.
NO.	BY:	DATE:	NO.	BY:	DATE:			S-13
1			3					TOTAL SHEETS
2			4					15

DRAWN BY :	B.E. LANNING	DATE :	03/19
CHECKED BY :	B.E. ATKINSON	DATE :	03/19
DESIGN ENGINEER OF RECORD :	B.E. ATKINSON	DATE :	03/19

9/4/2019
12:55:25 PM
User: blanning
Filename: N:\NC Bridges\MI8004_CH Eng_Montgomery 123 Br. Rep\17BP8R133\Structures\401_025_17BP8R133_SMU_EB4_610123.dgn

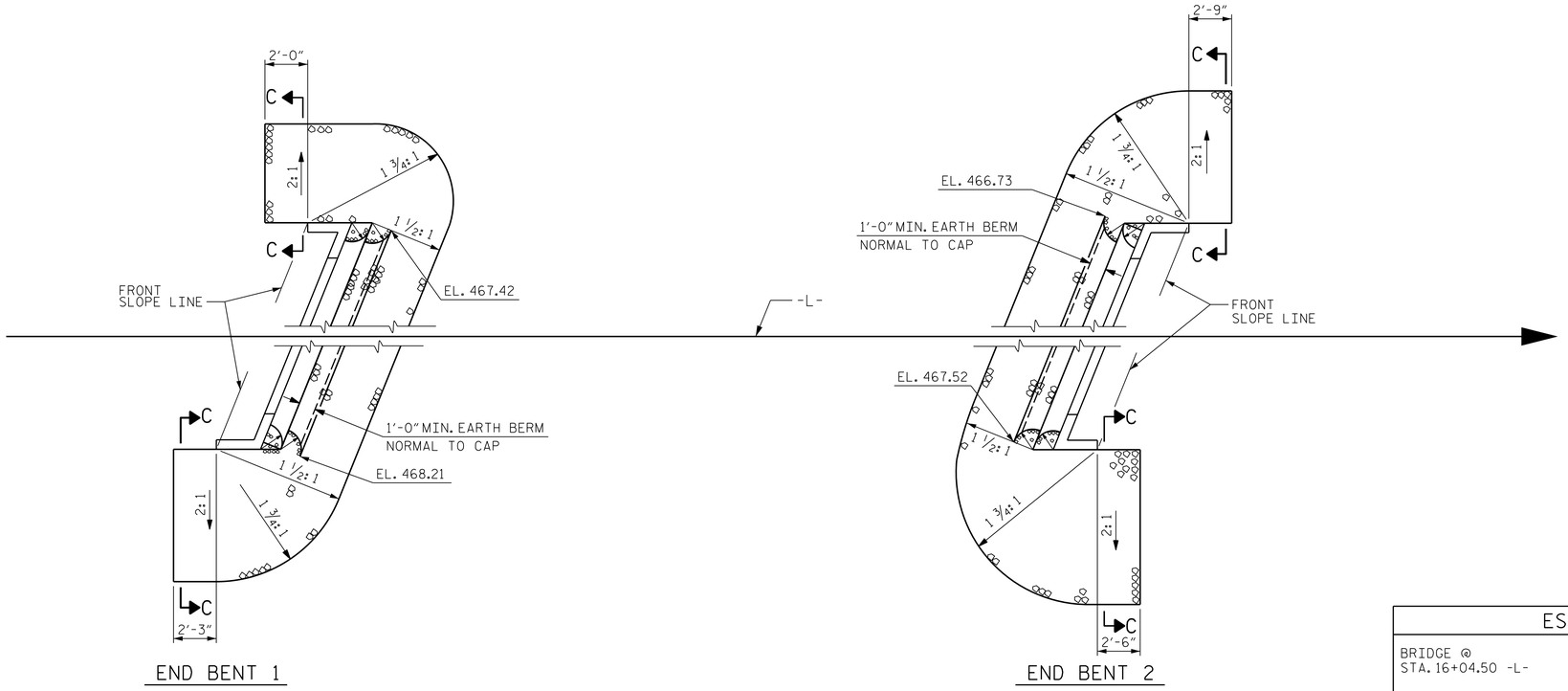

PLAN

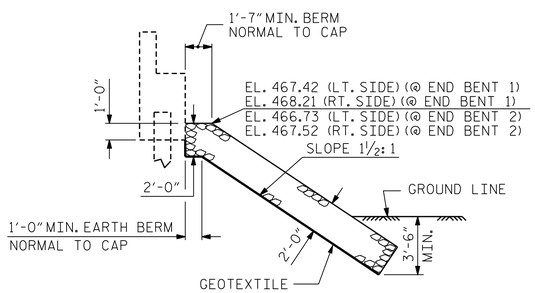

℄ SECTION

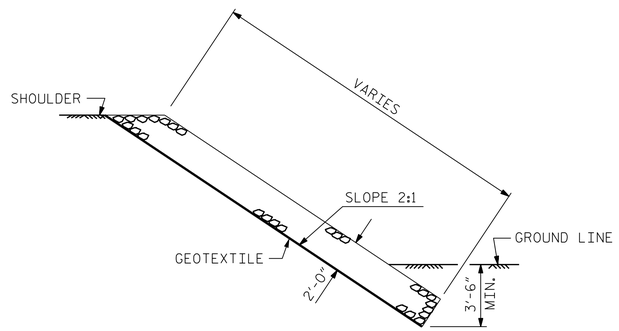

SECTION C-C

BERM RIP RAPPED

ESTIMATED QUANTITIES		
BRIDGE @ STA. 16+04.50 -L-	RIP RAP CLASS II (2'-0" THICK)	GEOTEXTILE FOR DRAINAGE
	TONS	SQUARE YARDS
END BENT 1	101	112
END BENT 2	145	161

PROJECT NO. 17BP.8.R.133
MONTGOMERY COUNTY
STATION: 16+04.50 -L-

STATE OF NORTH CAROLINA
DEPARTMENT OF TRANSPORTATION
RALEIGH

STANDARD

RIP RAP DETAILS

NORTH CAROLINA PROFESSIONAL SEAL 24939 ENGINEER BYRON E. ATKINSON
9/4/2019

DOCUMENT NOT CONSIDERED FINAL UNLESS ALL SIGNATURES COMPLETED

MI ENGINEERING
1011 SCHAUB DRIVE, SUITE 100
RALEIGH, NC 27606
(919) 851-6606
FIRM PE NUMBER : P-0671

REVISIONS						
NO.	BY:	DATE:	NO.	BY:	DATE:	
1			3			
2			4			

SHEET NO. S-14
TOTAL SHEETS 15

STD. NO. RR1 (Sht 3)

ASSEMBLED BY:	B.E. LANNING	DATE:	03/19
CHECKED BY :	B.E. ATKINSON	DATE:	03/19
DESIGN ENGINEER OF RECORD:	B.E. ATKINSON	DATE:	03/19
DRAWN BY : REK 1/84	REV. 10/1/11		MAA/GM
CHECKED BY : RDU 1/84	REV. 12/21/11		MAA/GM
	REV. 12/17		MAA/THC

9/4/2019
12:55:27 PM
User: blanning
Filename: N:\NC Bridges\MI8004_CH Eng.Montgomery 123 Br. Repl\17BP8R133\Structures\401_027_17BP8R133_SMU_RR1_610123.dgn

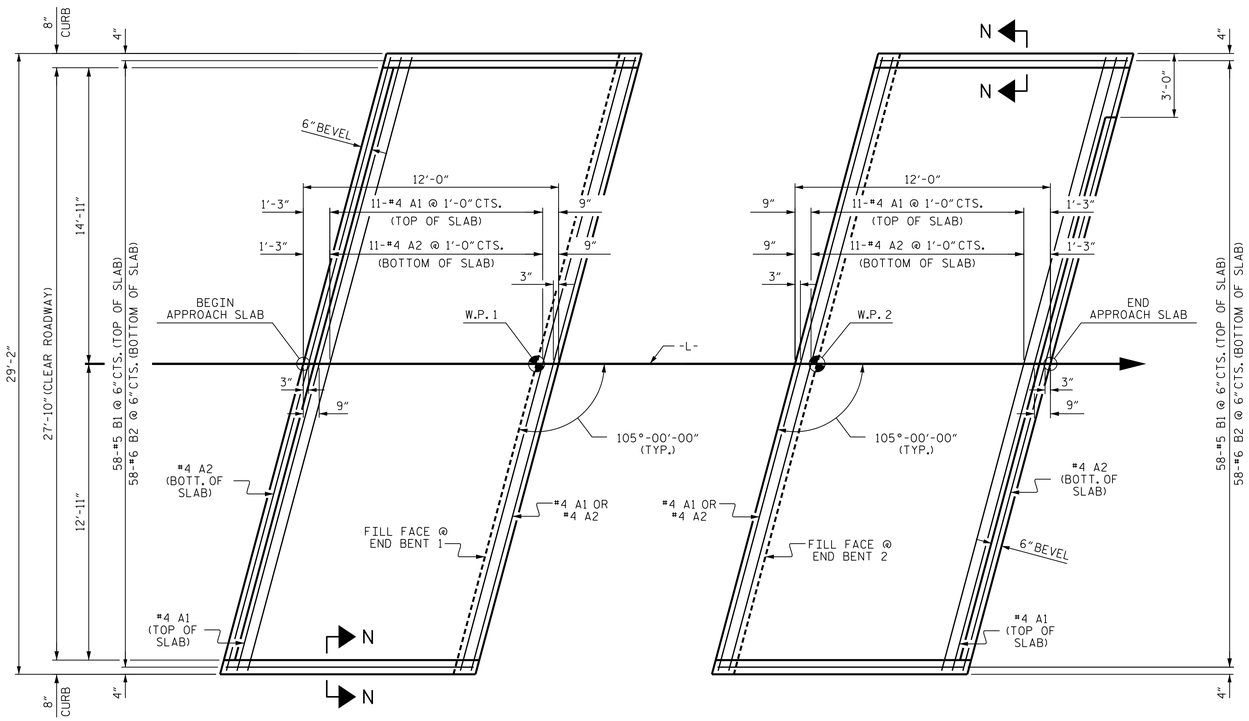

PLAN @ END BENT 1

PLAN @ END BENT 2

DIMENSIONS SHOWN ARE TYPICAL FOR BOTH APPROACH SLABS

NOTES

FOR BRIDGE APPROACH FILL INCLUDING GEOTEXTILE, 4"Ø DRAINAGE PIPE, AND SELECT MATERIAL BACKFILL, SEE ROADWAY PLANS.

GEOTEXTILE SHALL BE TYPE 1 IN ACCORDANCE WITH THE STANDARD SPECIFICATIONS SECTION 1056.

SELECT MATERIAL BACKFILL (CLASS V OR CLASS VI) SHALL BE IN ACCORDANCE WITH STANDARD SPECIFICATIONS SECTION 1016.

SELECT MATERIAL BACKFILL IS TO BE CONTINUOUS ALONG FILL FACE OF BACKWALL FROM OUTSIDE EDGE TO OUTSIDE EDGE OF APPROACH SLAB.

AREA BETWEEN THE WINGWALL AND APPROACH SLAB SHALL BE GRADED TO DRAIN THE WATER AWAY FROM THE FILL FACE OF THE BRIDGE AND SHALL BE PAVED. SEE ROADWAY PLANS.

FOR THE 4"Ø DRAINAGE PIPE OUTLET(S), SEE ROADWAY STANDARD DRAWINGS.

APPROACH SLAB GROOVING IS NOT REQUIRED.

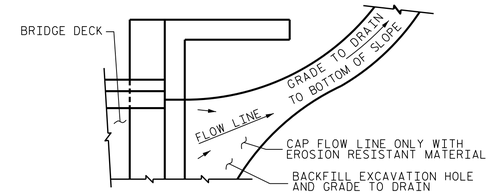

NOTE: IF THE APPROACH SLAB IS NOT CONSTRUCTED IMMEDIATELY AFTER THE BACKFILLING OF THE END BENT EXCAVATION, GRADE TO DRAIN TO THE BOTTOM OF THE SLOPE AND PROVIDE EROSION RESISTANT MATERIAL, SUCH AS FIBERGLASS ROVING OR AS DIRECTED BY THE ENGINEER TO PREVENT SOIL EROSION AND TO PROTECT THE AREA ADJACENT TO THE STRUCTURE. THE CONTRACTOR WILL BE REQUIRED TO REMOVE THESE MATERIALS PRIOR TO CONSTRUCTION OF THE APPROACH SLAB.

BILL OF MATERIAL

APPROACH SLAB AT EB 1

BAR	NO.	SIZE	TYPE	LENGTH	WEIGHT
* A1	13	#4	STR	29'-10"	259
A2	13	#4	STR	29'-10"	259
* B1	58	#5	STR	11'-1"	670
B2	58	#6	STR	11'-7"	1009
REINFORCING STEEL				LBS.	1268
* EPOXY COATED REINFORCING STEEL				LBS.	929
CLASS AA CONCRETE				C. Y.	15.5

APPROACH SLAB AT EB 2

BAR	NO.	SIZE	TYPE	LENGTH	WEIGHT
* A1	13	#4	STR	29'-10"	259
A2	13	#4	STR	29'-10"	259
* B1	58	#5	STR	11'-1"	670
B2	58	#6	STR	11'-7"	1009
REINFORCING STEEL				LBS.	1268
* EPOXY COATED REINFORCING STEEL				LBS.	929
CLASS AA CONCRETE				C. Y.	15.5

SPLICE LENGTHS

BAR SIZE	EPOXY COATED	UNCOATED
#4	2'-0"	1'-9"
#5	2'-6"	2'-2"
#6	3'-10"	2'-7"

TEMPORARY DRAINAGE DETAIL

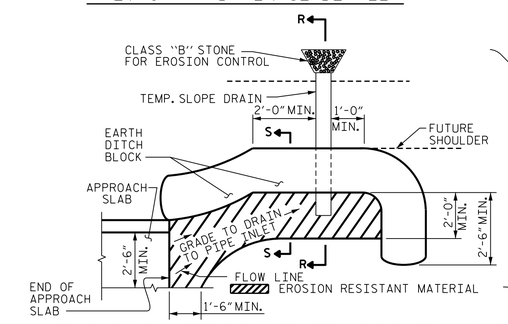

NOTE: IMMEDIATELY AFTER THE CONSTRUCTION OF THE APPROACH SLAB, THE CONTRACTOR SHALL PROVIDE TEMPORARY BERM AND SLOPE DRAIN. CONTRACTOR SHALL GRADE TO PIPE INLET AND PROVIDE EROSION RESISTANT MATERIAL AS SHOWN. THE EROSION RESISTANT MATERIAL SHALL BE EITHER 1) ASPHALT PLANT MIX, TYPE 1 OR TYPE 2, MIN. 2" DEPTH, 2) EROSION CONTROL MAT, OR 3) CONCRETE, AS DIRECTED BY THE ENGINEER. THE SLOPE DRAIN SHALL CONSIST OF A NON-PERFORATED TEMPORARY DRAINAGE PIPE, 12 INCHES IN DIAMETER.

PLAN VIEW

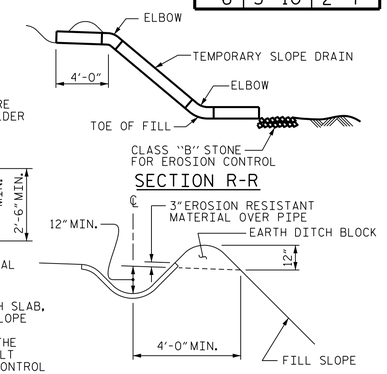

SECTION S-S

TEMPORARY BERM AND SLOPE DRAIN DETAILS

(TO BE USED WHEN SHOULDER BERM GUTTER IS REQUIRED)

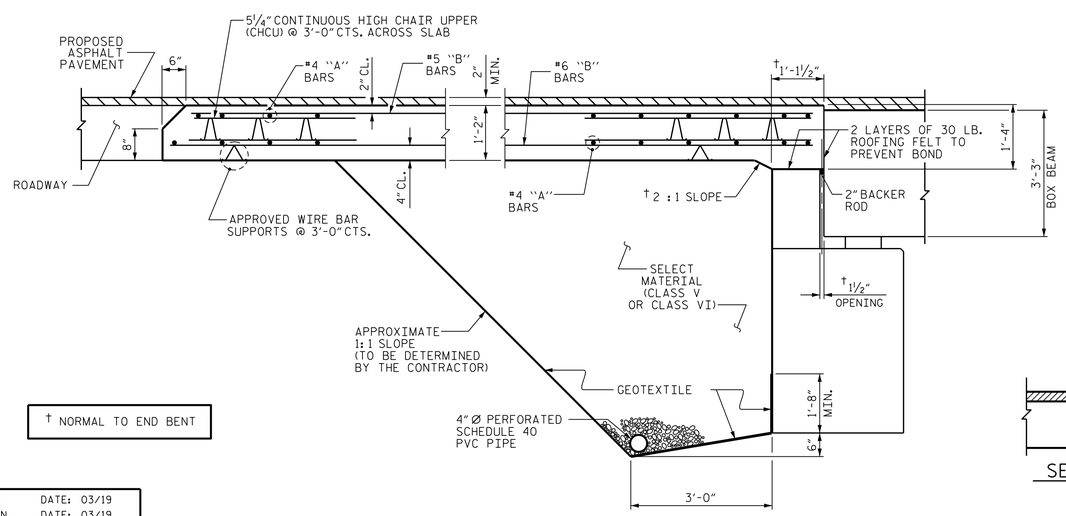

† NORMAL TO END BENT

SECTION THRU SLAB

(TYPE II - MODIFIED APPROACH FILL)

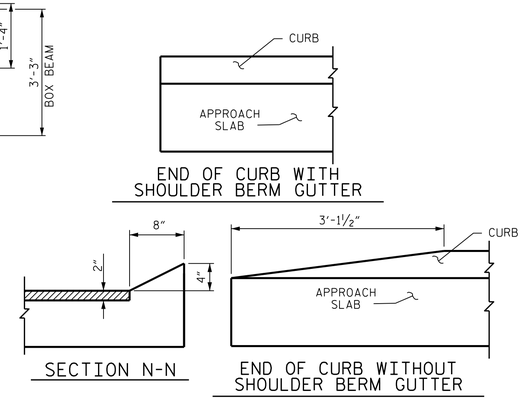

SECTION N-N

END OF CURB WITHOUT SHOULDER BERM GUTTER

CURB DETAILS

PROJECT NO. 17BP.8.R.133

MONTGOMERY COUNTY

STATION: 16+04.50 -L-

NORTH CAROLINA PROFESSIONAL SEAL 24939 ENGINEER BYRON E. ATKINSON

9/4/2019

DOCUMENT NOT CONSIDERED FINAL UNLESS ALL SIGNATURES COMPLETED

STATE OF NORTH CAROLINA
DEPARTMENT OF TRANSPORTATION
RALEIGH

STANDARD
BRIDGE APPROACH SLAB
FOR PRESTRESSED CONCRETE
BOX BEAM UNIT
(SUB-REGIONAL TIER)
105° SKEW

ASSEMBLED BY:	B.E. LANNING	DATE: 03/19
CHECKED BY :	B.E. ATKINSON	DATE: 03/19
DESIGN ENGINEER OF RECORD:	B.E. ATKINSON	DATE: 03/19
DRAWN BY : MAA 11/11	REV. 12-17	MAA/THC
CHECKED BY : AAC 11/11		

MI ENGINEERING
1011 SCHAUB DRIVE, SUITE 100
RALEIGH, NC 27606
(919) 851-6606
FIRM PE NUMBER : P-0671

REVISIONS						SHEET NO.
NO.	BY:	DATE:	NO.	BY:	DATE:	S-15
1			3			TOTAL SHEETS
2			4			15

STD. NO. BAS_BB_30_105S

9/4/2019
12:55:29 PM
User: blanning
Filename: N:\NC Bridges\MI8004_CH Eng_Montgomery 123 Br. Rep\17BP8R133\Structures\401_029_17BP8R133_SMU_BAS1_610123.dgn

STANDARD NOTES

DESIGN DATA:

SPECIFICATIONS	A.A.S.H.T.O. (CURRENT)
LIVE LOAD	SEE PLANS
IMPACT ALLOWANCE	SEE A.A.S.H.T.O.
STRESS IN EXTREME FIBER OF STRUCTURAL STEEL - AASHTO M270 GRADE 36	20,000 LBS. PER SQ. IN.
- AASHTO M270 GRADE 50W	27,000 LBS. PER SQ. IN.
- AASHTO M270 GRADE 50	27,000 LBS. PER SQ. IN.
REINFORCING STEEL IN TENSION - GRADE 60	24,000 LBS. PER SQ. IN.
CONCRETE IN COMPRESSION	1,200 LBS. PER SQ. IN.
CONCRETE IN SHEAR	SEE A.A.S.H.T.O.
STRUCTURAL TIMBER - TREATED OR UNTREATED EXTREME FIBER STRESS	1,800 LBS. PER SQ. IN.
COMPRESSION PERPENDICULAR TO GRAIN OF TIMBER	375 LBS. PER SQ. IN.
EQUIVALENT FLUID PRESSURE OF EARTH	30 LBS. PER CU. FT. (MINIMUM)

MATERIAL AND WORKMANSHIP:

EXCEPT AS MAY OTHERWISE BE SPECIFIED ON PLANS OR IN THE SPECIAL PROVISIONS, ALL MATERIAL AND WORKMANSHIP SHALL BE IN ACCORDANCE WITH THE 2018 "STANDARD SPECIFICATIONS FOR ROADS AND STRUCTURES" OF THE N.C. DEPARTMENT OF TRANSPORTATION.

STEEL SHEET PILING FOR PERMANENT OR TEMPORARY APPLICATIONS SHALL BE HOT ROLLED.

CONCRETE:

UNLESS OTHERWISE REQUIRED ON PLANS, CLASS A CONCRETE SHALL BE USED FOR ALL PORTIONS OF ALL STRUCTURES WITH THE EXCEPTION THAT: CLASS AA CONCRETE SHALL BE USED IN BRIDGE SUPERSTRUCTURES, ABUTMENT BACKWALLS, AND APPROACH SLABS; AND CLASS B CONCRETE SHALL BE USED FOR SLOPE PROTECTION AND RIP RAP.

CONCRETE CHAMFERS:

UNLESS OTHERWISE NOTED ON THE PLANS, ALL EXPOSED CORNERS ON STRUCTURES SHALL BE CHAMFERED 3/4" WITH THE FOLLOWING EXCEPTIONS: TOP CORNERS OF CURBS MAY BE ROUNDED TO 1 1/2" RADIUS WHICH IS BUILT INTO CURB FORMS; CORNERS OF TRANSVERSE FLOOR EXPANSION JOINTS SHALL BE ROUNDED WITH A 1/4" FINISHING TOOL UNLESS OTHERWISE REQUIRED ON PLANS; AND CORNERS OF EXPANSION JOINTS IN THE ROADWAY FACES AND TOPS OF CURBS AND SIDEWALKS SHALL BE ROUNDED TO A 1/4" RADIUS WITH A FINISHING STONE OR TOOL UNLESS OTHERWISE REQUIRED ON PLANS.

DOWELS:

DOWELS WHEN INDICATED ON PLANS AS FOR CULVERT EXTENSIONS, SHALL BE EMBEDDED AT LEAST 12" INTO THE OLD CONCRETE AND GROUTED INTO PLACE WITH 1:2 CEMENT MORTAR.

ALLOWANCE FOR DEAD LOAD DEFLECTION, SETTLEMENT, ETC. IN CASTING SUPERSTRUCTURES:

BRIDGES SHALL BE BUILT ON THE GRADE OR VERTICAL CURVE SHOWN ON PLANS. SLABS, CURBS AND PARAPETS SHALL CONFORM TO THE GRADE OR CURVE.

ALL DIMENSIONS WHICH ARE GIVEN IN SECTION AND ARE AFFECTED BY DEAD LOAD DEFLECTIONS ARE DIMENSIONS AT CENTER LINE OF BEARING UNLESS OTHERWISE NOTED ON PLANS. IN SETTING FORMS FOR STEEL BEAM BRIDGES AND PRESTRESSED CONCRETE GIRDER BRIDGES, ADJUSTMENTS SHALL BE MADE DUE TO THE DEAD LOAD DEFLECTIONS FOR THE ELEVATIONS SHOWN. WHERE BLOCKS ARE SHOWN OVER BEAMS FOR BUILDING UP TO THE SLAB, THE VERTICAL DIMENSIONS OF THE BLOCKS SHALL BE ADJUSTED BETWEEN BEARINGS TO COMPENSATE FOR DEAD LOAD DEFLECTIONS, VERTICAL CURVE ORDINATE, AND ACTUAL BEAM CAMBER. WHERE BOTTOM OF SLAB IS IN LINE WITH BOTTOM OF TOP FLANGES, DEPTH OF SLAB BETWEEN BEARINGS SHALL BE ADJUSTED TO COMPENSATE FOR DEAD LOAD DEFLECTION, VERTICAL CURVE ORDINATE, AND ACTUAL BEAM CAMBER.

IN SETTING FALSEWORK AND FORMS FOR REINFORCED CONCRETE SPANS, AN ALLOWANCE SHALL BE MADE FOR DEAD LOAD DEFLECTIONS, SETTLEMENT OF FALSEWORK, AND PERMANENT CAMBER WHICH SHALL BE PROVIDED FOR IN ADDITION TO THE ELEVATIONS SHOWN. AFTER REMOVAL OF THE FALSEWORK, THE FINISHED STRUCTURES SHALL CONFORM TO THE PROFILE AND ELEVATIONS SHOWN ON THE PLANS AND CONSTRUCTION ELEVATIONS FURNISHED BY THE ENGINEER.

DETAILED DRAWINGS FOR FALSEWORK OR FORMS FOR BRIDGE SUPERSTRUCTURE AND ANY STRUCTURE OR PARTS OF A STRUCTURE AS NOTED ON THE PLANS SHALL BE SUBMITTED TO THE ENGINEER FOR APPROVAL BEFORE CONSTRUCTION OF THE FALSEWORK OR FORMS IS STARTED.

REINFORCING STEEL:

ALL REINFORCING STEEL SHALL BE DEFORMED. DIMENSIONS RELATIVE TO PLACEMENT OF REINFORCING ARE TO CENTERS OF BARS UNLESS OTHERWISE INDICATED IN THE PLANS. DIMENSIONS ON BAR DETAILS ARE TO CENTERS OF BARS OR ARE OUT TO OUT AS INDICATED ON PLANS.

WIRE BAR SUPPORTS SHALL BE PROVIDED FOR REINFORCING STEEL WHERE INDICATED ON THE PLANS. WHEN BAR SUPPORT PIECES ARE PLACED IN CONTINUOUS LINES, THEY SHALL BE SO PLACED THAT THE ENDS OF THE SUPPORTING WIRES SHALL BE LAPPED TO LOCK LEGS ON ADJOINING PIECES.

STRUCTURAL STEEL:

AT THE CONTRACTOR'S OPTION, HE MAY SUBSTITUTE 7/8" Ø SHEAR STUDS FOR THE 3/4" Ø STUDS SPECIFIED ON THE PLANS. THIS SUBSTITUTION SHALL BE MADE AT THE RATE OF 3 - 7/8" Ø STUDS FOR 4 - 3/4" Ø STUDS, AND STUD SPACING CHANGES SHALL BE MADE AS NECESSARY TO PROVIDE THE SAME EQUIVALENT NUMBER OF 7/8" Ø STUDS ALONG THE BEAM AS SHOWN FOR 3/4" Ø STUDS BASED ON THE RATIO OF 3 - 7/8" Ø STUDS FOR 4 - 3/4" Ø STUDS. STUDS OF THE LENGTH SPECIFIED ON THE PLANS MUST BE PROVIDED. THE MAXIMUM SPACING SHALL BE 2'-0".

EXCEPT AT THE INTERIOR SUPPORTS OF CONTINUOUS BEAMS WHERE THE COVER PLATE IS IN CONTACT WITH BEARING PLATE, THE CONTRACTOR MAY, AT HIS OPTION, SUBSTITUTE FOR THE COVER PLATES DESIGNATED ON THE PLANS COVER PLATES OF THE EQUIVALENT AREA PROVIDED THESE PLATES ARE AT LEAST 5/16" IN THICKNESS AND DO NOT EXCEED A WIDTH EQUAL TO THE FLANGE WIDTH LESS 2" OR A THICKNESS EQUAL TO 2 TIMES THE FLANGE THICKNESS. THE SIZE OF FILLET WELDS SHALL CONFORM TO THE REQUIREMENTS OF THE CURRENT ANSI/AASHTO/AWS "BRIDGE WELDING CODE". ELECTROSLAG WELDING WILL NOT BE PERMITTED.

WITH THE SOLE EXCEPTION OF EDGES AT SURFACES WHICH BEAR ON OTHER SURFACES, ALL SHARP EDGES AND ENDS OF SHAPES AND PLATES SHALL BE SLIGHTLY ROUNDED BY SUITABLE MEANS TO A RADIUS OF APPROXIMATELY 1/16 INCH OR EQUIVALENT FLAT SURFACE AT A SUITABLE ANGLE PRIOR TO PAINTING, GALVANIZING, OR METALLIZING.

HANDRAILS AND POSTS:

METAL STANDARDS AND FACES OF THE CONCRETE END POSTS FOR THE METAL RAIL SHALL BE SET NORMAL TO THE GRADE OF THE CURB, UNLESS OTHERWISE SHOWN ON PLANS. THE METAL RAIL AND TOPS OF CONCRETE POSTS USED WITH THE ALUMINUM RAIL SHALL BE BUILT PARALLEL TO THE GRADE OF THE CURB.

METAL HANDRAILS SHALL BE IN ACCORDANCE WITH THE PLANS. RAILS SHALL BE AS MANUFACTURED FOR BRIDGE RAILING. CASTINGS SHALL BE OF A UNIFORM APPEARANCE. FINS AND OTHER DEFORMATIONS RESULTING FROM CASTING OR OTHERWISE SHALL BE REMOVED IN A MANNER SO THAT A UNIFORM COLORING OF THE COMPLETED CASTING SHALL BE OBTAINED. CASTINGS WITH DISCOLORATIONS OR OF NON-UNIFORM COLORING WILL NOT BE ACCEPTED. CERTIFIED MILL REPORTS ARE REQUIRED FOR METAL RAILS AND POSTS.

SPECIAL NOTES:

GENERALLY, IN CASE OF DISCREPANCY, THIS STANDARD SHEET OF NOTES SHALL GOVERN OVER THE SPECIFICATIONS, BUT THE REMAINDER OF THE PLANS SHALL GOVERN OVER NOTES HEREON, AND SPECIAL PROVISIONS SHALL GOVERN OVER ALL. SEE SPECIFICATIONS ARTICLE 105-4.

ENGLISH

JANUARY, 1990