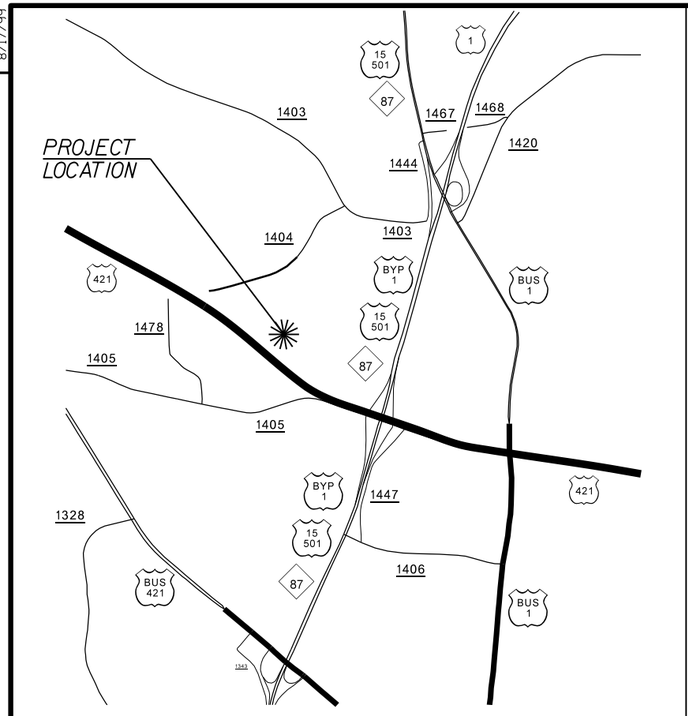

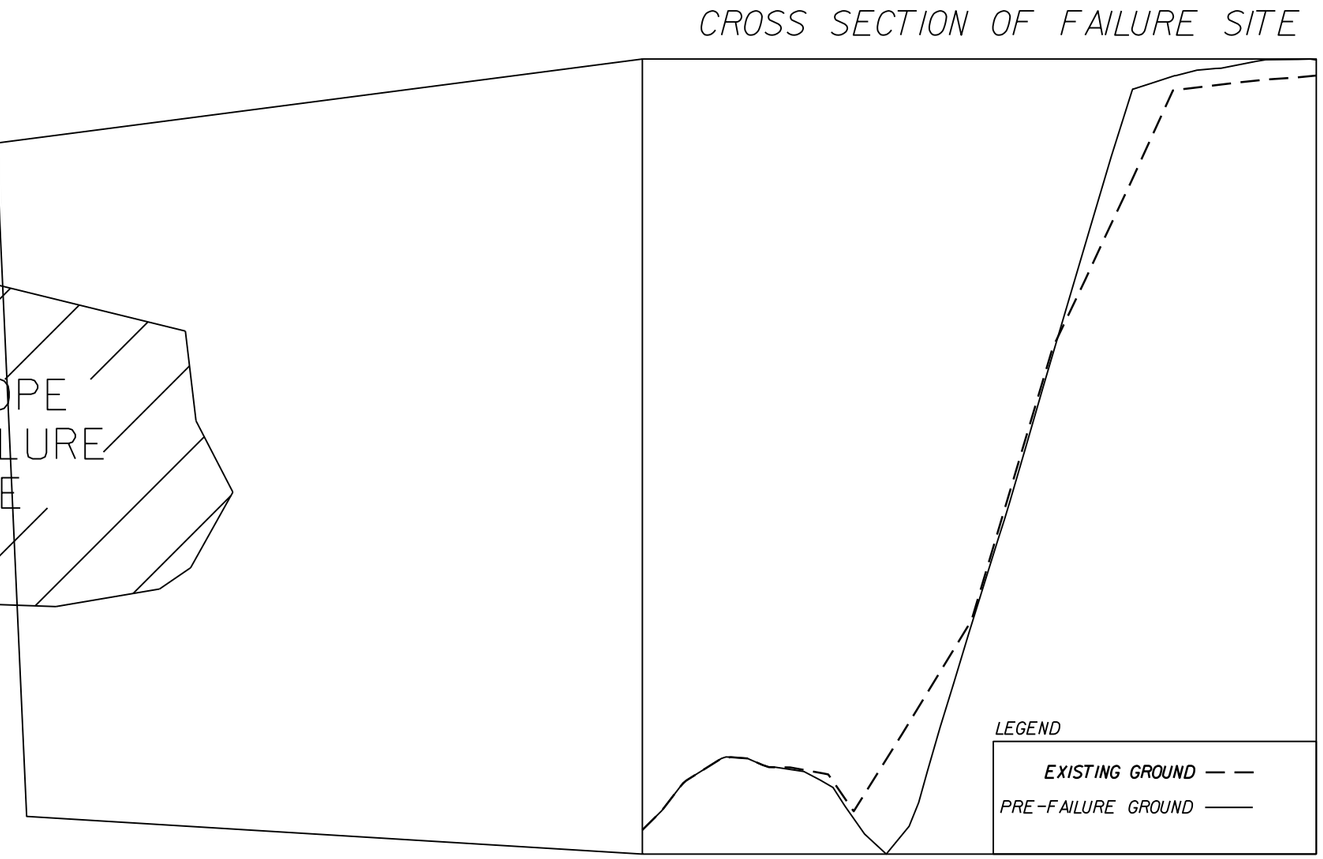

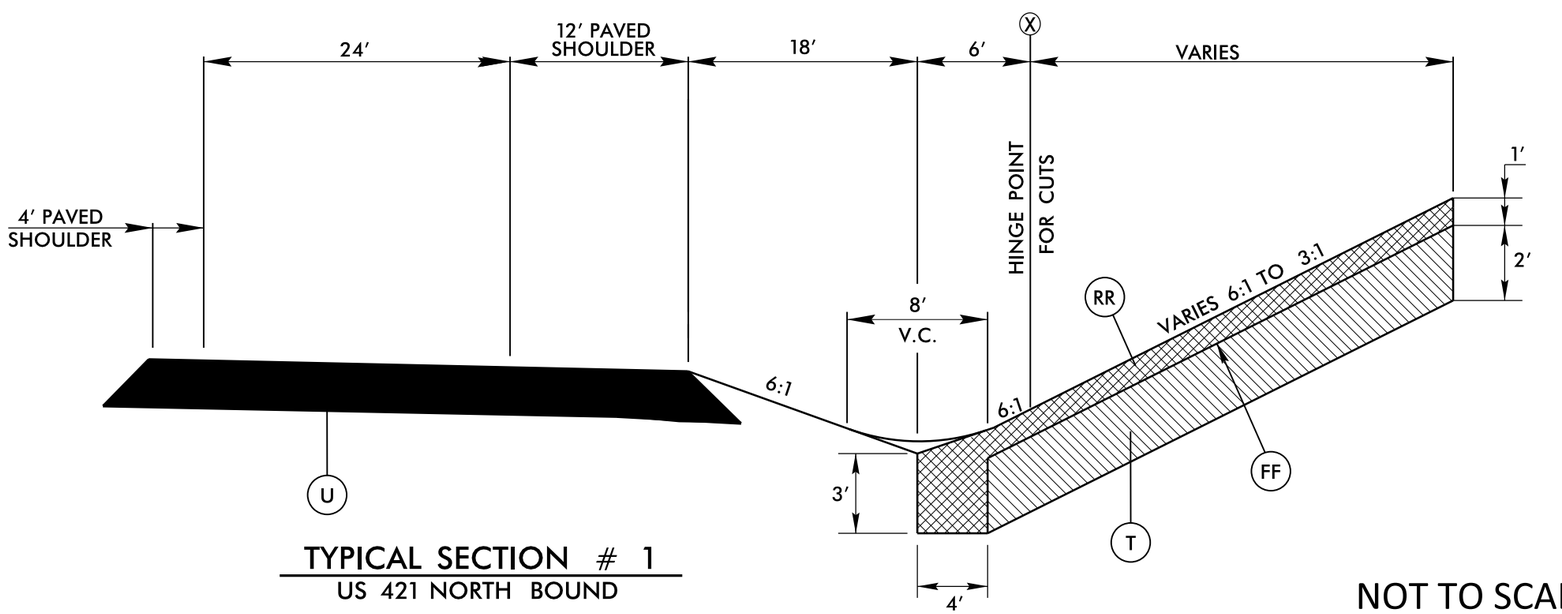

TYPICAL SECTION # 1
US 421 NORTH BOUND

NOT TO SCALE

INSTALL EROSION CONTROL DEVICES AS DIRECTED BY ENGINEER.

FF	GEOTEXTILE FOR DRAINAGE, TYPE 2
RR	RIP RAP, CLASS B
T	EARTH MATERIAL
U	EXIST. PAVEMENT

REVISIONS

8/17/99

22-JUL-2016 09:11
S:\ProjMgmt\PD Contracts\34431.3.7_US 421 Slope Failure_DH00208\cad\us1@SBus421byp_slope_#2_dsn.dgn
cabrown AT DBCAD-292295

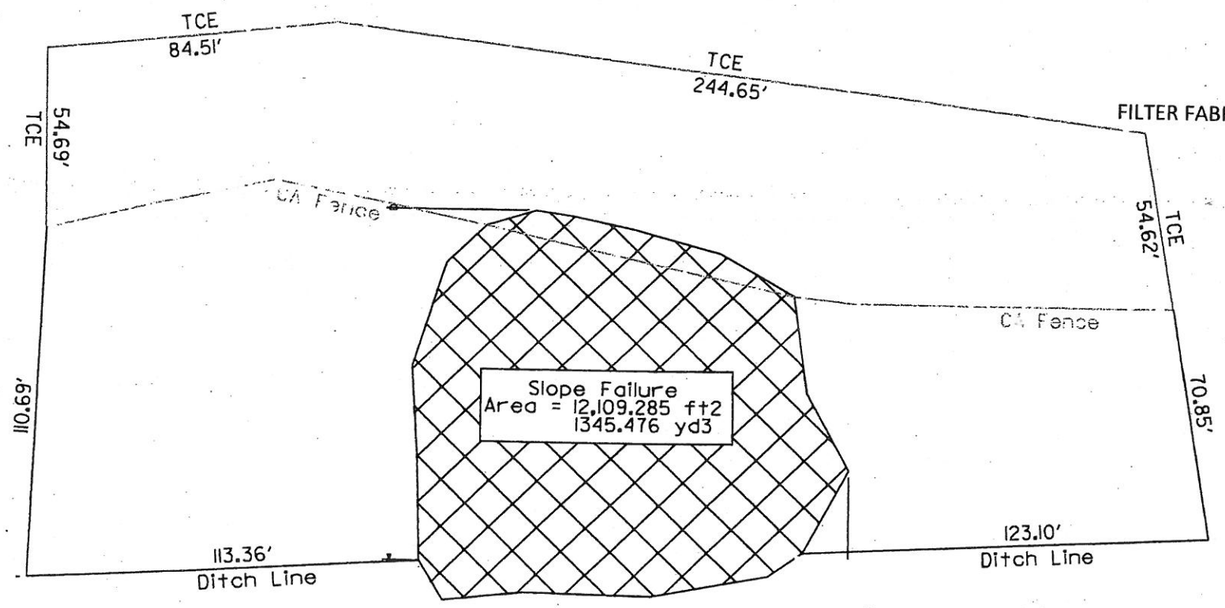

TOE PROTECTION/ROCK KEY

, NOT TO SCALE

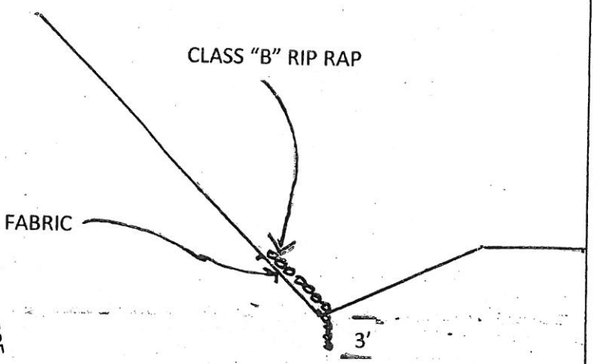

TO BE INSTALLED FOR TOTAL

WIDTH OF SLOPE FAILURE

---3' KEY IN DEPTH

---1' THICKNESS OF CLASS "B" FOR

ENTIRE INSTALLATION

Upon completion of slope repair the exposed material shall be seeded and covered with matting

**Quantity of material for this area at a depth of 3.0' throughout =

US 421 Slope Failure Sanford	04-15-16 WRG
Area figured by coord. method. Coord. and elev. assumed	

*NOT TO SCALE

STATE OF
NORTH CAROLINA
DEPT. OF TRANSPORTATION
DIVISION OF HIGHWAYS
RALEIGH, N.C.

1-12

ENGLISH STANDARD DRAWING FOR

MATTING INSTALLATION

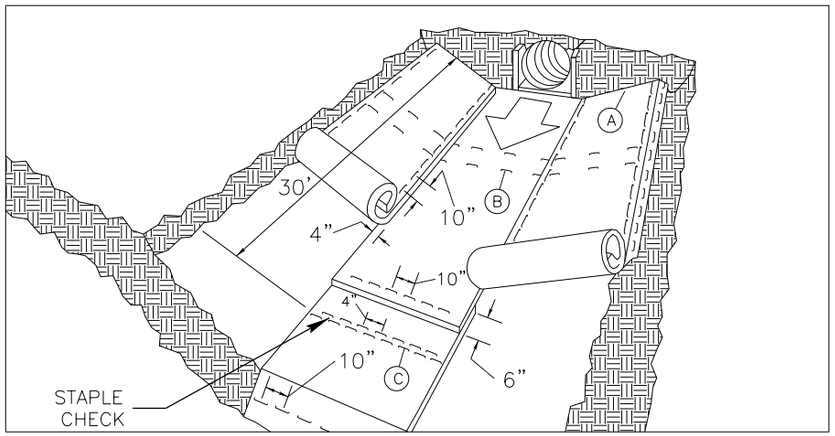

MATTING IN DITCHES

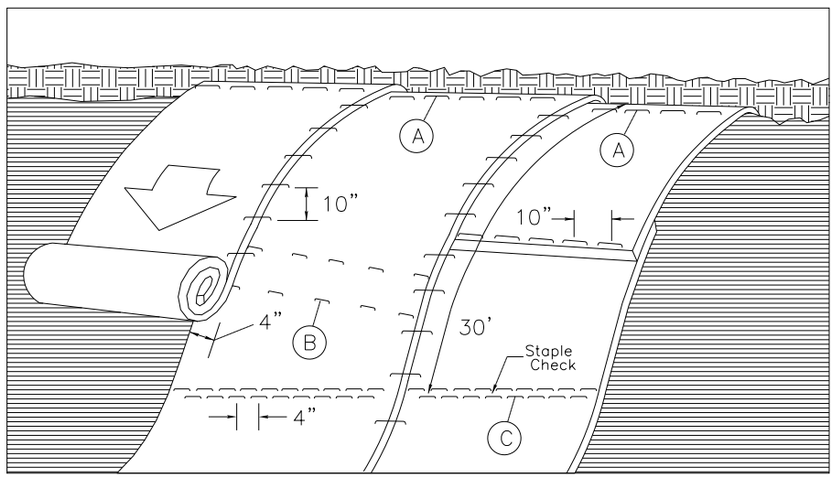

MATTING ON SLOPES

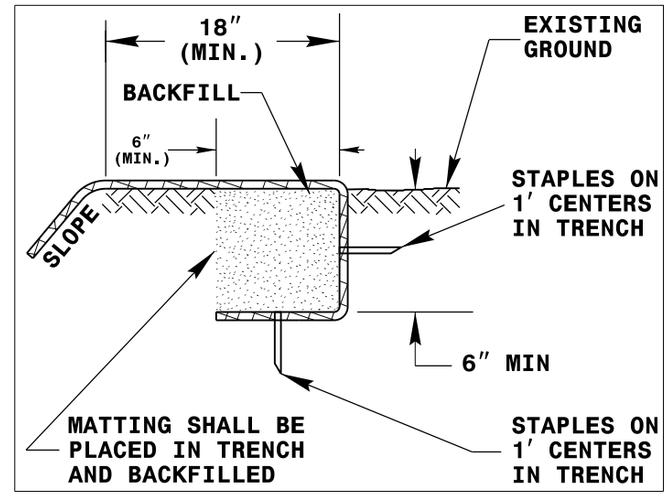

DIAGRAM (A)

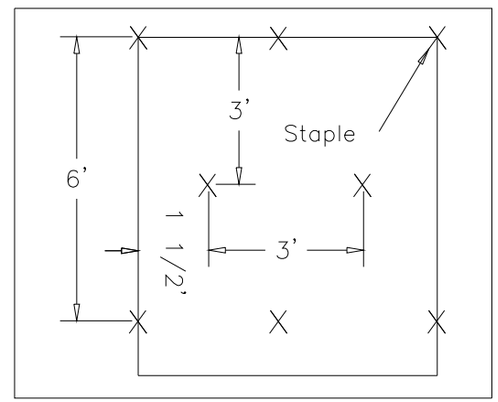

DIAGRAM (B)

Staple Check Pattern

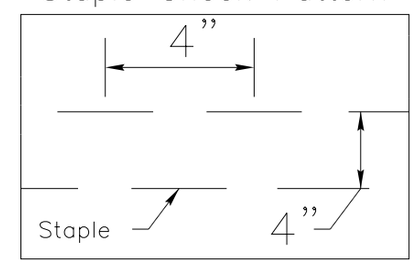

DIAGRAM (C)

NOTES:

THIS DETAIL APPLIES TO STRAW, EXCELSIOR, AND PERMANENT SOIL REINFORCEMENT MAT (PSRM) INSTALLATION.

STAPLES SHALL BE NO. 11 GAUGE STEEL WIRE FORMED INTO A "U" SHAPE WITH A MINIMUM THROAT WIDTH OF 1 INCH AND NOT LESS THAN 6 INCHES IN LENGTH.

NOT TO SCALE

SHEET 1 OF 1

1631.01

STATE OF
NORTH CAROLINA
DEPT. OF TRANSPORTATION
DIVISION OF HIGHWAYS
RALEIGH, N.C.

1-12

ENGLISH STANDARD DRAWING FOR

MATTING INSTALLATION

SHEET 1 OF 1

1631.01

PROJECT NO.	SHEET NO.	TOTAL NO.
34431.3.7		

SUMMARY OF QUANTITIES

PROJECT NO	COUNTY	MAP NO	ROUTE	DESCRIPTION	TYP NO	LANES	LANE TYPE	FINAL SURFACE TESTING REQUIRED	WARM MIX ASPHALT REQUIRED	LENGTH MI	WIDTH FT	GRADING LS	INCIDENTAL STONE BASE TONS	WOVEN WIRE FENCE RESET LF	RIP RAP, CLASS B TON	GEOTEXTILE FOR DRAINAGE SY	TEMPORARY SILT FENCE LF	EROSION CONTROL STONE, CLASS A TON	EROSION CONTROL STONE, CLASS B TON	SEDIMENT CONTROL STONE TON	SEED FOR TEMPORARY SEEDING LB	FERTILIZER FOR TEMPORARY SEEDING TON	SILT EXCAVATION CY	MATTING (EROSION CONTROL) SY	WATTLE LF	POLYACRYLAMIDE (PAM) LB	SEED & MULCHING AC	SEED FOR REPAIR SEEDING LB	FERTILIZER FOR REPAIR SEEDING TON	SEED FOR SUPPLEMENTAL SEEDING LB	FERTILIZER TOPDRESSING TON	RESPONSE FOR EROSION CONTROL EA
34431.3.7	Lee	1	US421	SLOPE FAILURE REPAIR	1	2		NO	NO	0.1	24	1.000	10	300.00	750	1,560	450	50	30	10	100	0.50	20	4,000	160	1	0.90	50	0.25	50	0.50	5
TOTAL FOR MAP NO. 1										**0.1**		**1.000**	**10**	**300.00**	**750**	**1,560**	**450**	**50**	**30**	**10**	**100**	**0.50**	**20**	**4,000**	**160**	**1**	**0.90**	**50**	**0.25**	**50**	**0.50**	**5**
TOTAL FOR PROJ NO. 34431.3.7										**0.1**		**1.000**	**10**	**300.00**	**750**	**1,560**	**450**	**50**	**30**	**10**	**100**	**0.50**	**20**	**4,000**	**160**	**1**	**0.90**	**50**	**0.25**	**50**	**0.50**	**5**
GRAND TOTAL										**0.1**		**1.000**	**10**	**300.00**	**750**	**1,560**	**450**	**50**	**30**	**10**	**100**	**0.50**	**20**	**4,000**	**160**	**1**	**0.90**	**50**	**0.25**	**50**	**0.50**	**5**