09/08/99

TIP PROJECT: BD-5108S

CONTRACT: DH00082

See Sheet 1-A For Index of Sheets
See Sheet 1-B For Conventional symbols
See Sheet 1-C For Survey Control Sheet

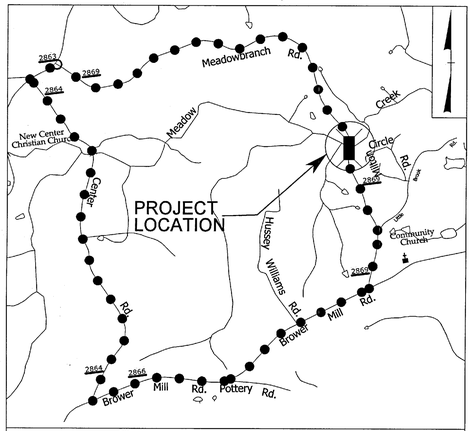

VICINITY MAP

OFF-SITE DETOUR ROUTE

STATE OF NORTH CAROLINA
DIVISION OF HIGHWAYS

RANDOLPH COUNTY

LOCATION: BRIDGE NO. 210 OVER MEADOW CREEK ON ON SR 2869 (MEADOWBRANCH ROAD)

TYPE OF WORK: GRADING, DRAINAGE, PAVING, STRUCTURE

STATE	STATE PROJECT REFERENCE NO.	SHEET NO.	TOTAL SHEETS
N.C.	BD-5108S	1	

STATE PROJ. NO.	F.A. PROJ. NO.	DESCRIPTION
45354.1.20	BRZ-2869(1)	PE
45354.2.20	BRZ-2869(1)	R/W & UTIL
45354.3.20	BRZ-2869(1)	CONST

NC GRID NAD 83

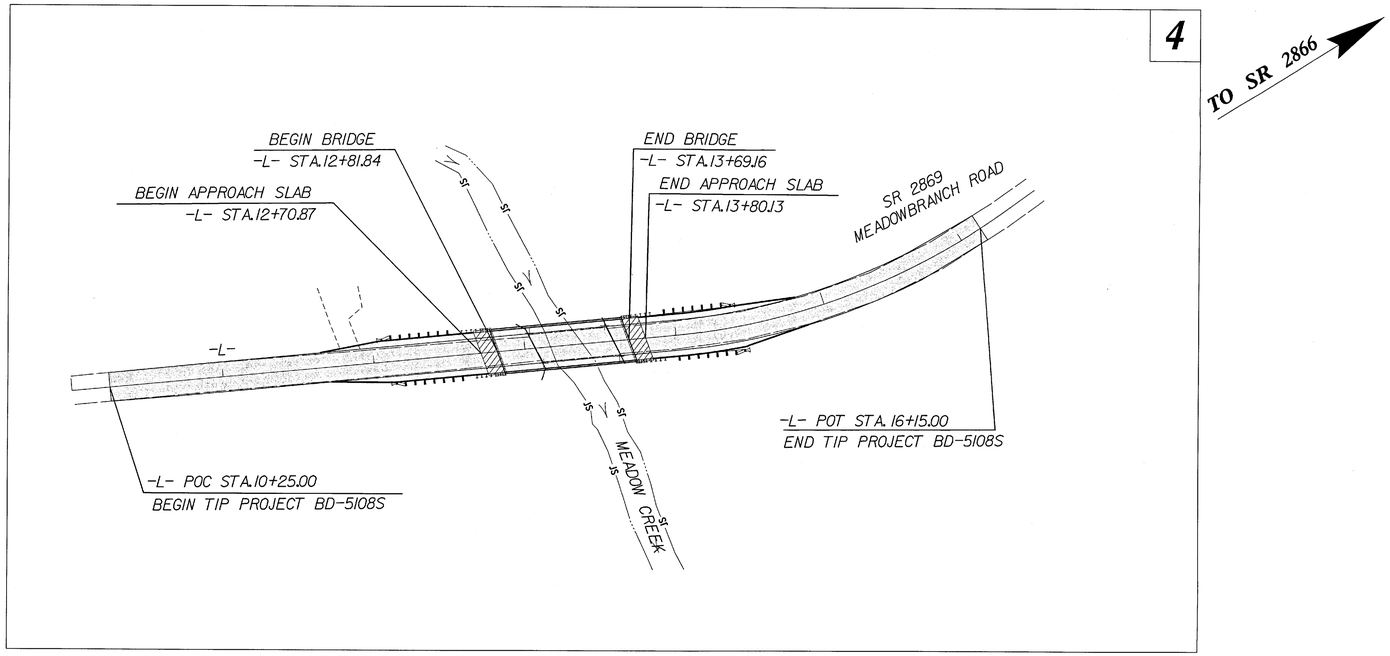

GRAPHIC SCALES

50 25 0 50 100
PLANS

50 25 0 50 100
PROFILE (HORIZONTAL)

10 5 0 10 20
PROFILE (VERTICAL)

DESIGN DATA

ADT 2011 = 339
D = 50 %
T = 6 % *
V = 45 MPH

FUNC CLASS = RURAL LOCAL
* TTST 3% DUAL 3%

PROJECT LENGTH

LENGTH OF ROADWAY TIP PROJECT BD-5108S = 0.095 MI
LENGTH OF STRUCTURE TIP PROJECT BD-5108S = 0.017 MI
TOTAL LENGTH OF TIP PROJECT BD-5108S = 0.112 MI

DESIGN EXCEPTIONS REQUIRED:
DESIGN SPEED
SAG VERT. CURVES

Prepared In the Office of:
SEPI ENGINEERING & CONSTRUCTION
1025 Wade Avenue
Raleigh, NC 27605
Tel:919-789-9977
Fax:919-789-9591
License: C-2197

FOR THE NORTH CAROLINA DEPT. OF TRANSPORATION

2012 STANDARD SPECIFICATIONS

RIGHT OF WAY DATE:
FEBRUARY 2012

LETTING DATE:
SEPTEMBER 25, 2012

STEVE SCOTT, PE
PROJECT ENGINEER

AGNIESZKA NAU, PE
ROADWAY PROJECT DESIGN ENGINEER

TIM WELCH, PE
NCDOT CONTACT

HYDRAULICS ENGINEER

NORTH CAROLINA PROFESSIONAL SEAL 019732 ENGINEER SHIHCHEN FUH

6-12-12
SIGNATURE:

ROADWAY DESIGN ENGINEER

NORTH CAROLINA PROFESSIONAL SEAL 029712 ENGINEER AGNIESZKA J. NAU

06-12-12 P.E.
SIGNATURE:

DIVISION OF HIGHWAYS
STATE OF NORTH CAROLINA

STATE OF NORTH CAROLINA DEPARTMENT OF TRANSPORTATION

P.E.
STATE HIGHWAY DESIGN ENGINEER

$$$$$SYSTIME$$$$
$$$$$$$$$$$$$$$$DGN$$$$$$$$$$$$$$$$
$$$$USERNAME$$$$

8/17/99

PROJECT REFERENCE NO.	SHEET NO.
BD-5108S	1-A

STATE OF NORTH CAROLINA
DIVISION OF HIGHWAYS

INDEX OF SHEETS, GENERAL NOTES, AND LIST OF STANDARDS

INDEX OF SHEETS

SHEET NUMBER	SHEET
1	TITLE SHEET
1-A	INDEX OF SHEETS, GENERAL NOTES, AND LIST OF STANDARD DRAWINGS
1-B	CONVENTIONAL SYMBOLS
1-C	SURVEY CONTROL
2	PAVEMENT SCHEDULE AND TYPICAL SECTIONS
2A	ANCHORAGE FOR FRAMES
2B	BRIDGE APPROACH FILL - SUB REGIONAL TIER
2C	METHOD OF PIPE INSTALLATION
2D	METHOD OF PIPE INSTALLATION
3	SUMMARY OF QUANTITIES
3A	DRAINAGE SUMMARY
3B	SUMMARY OF EARTHWORK, GUARDRAIL AND PAVEMENT REMOVAL
4	PLAN SHEET
5	PROFILE SHEET
TMP-1 THRU TMP-2	TRAFFIC MANAGEMENT PLANS
SN-1	OFF-SITE DETOUR SIGN DESIGN
EC-1 THRU EC-5	EROSION CONTROL PLANS
X-1 THRU X-6	CROSS-SECTIONS
S-1 THRU S-14	STRUCTURE PLANS
UO-1 THRU UO-2	UTILITIES BY OTHERS

GENERAL NOTES:

2012 SPECIFICATIONS
EFFECTIVE: 01-17-12
REVISED: 11-01-11

GRADE LINE:
GRADING AND SURFACING:

THE GRADE LINES SHOWN DENOTE THE FINISHED ELEVATION OF THE PROPOSED SURFACING AT GRADE POINTS SHOWN ON THE TYPICAL SECTIONS. GRADE LINES MAY BE ADJUSTED AT THEIR BEGINNING AND ENDING AND AT STRUCTURES AS DIRECTED BY THE ENGINEER IN ORDER TO SECURE A PROPER TIE-IN.

SUPERELEVATION:

ALL CURVES ON THIS PROJECT SHALL BE SUPERELEVATED IN ACCORDANCE WITH STD. NO. 225.04 USING THE RATE OF SUPERELEVATION AND RUNOFF SHOWN ON THE PLANS. SUPERELEVATION IS TO BE REVOLVED ABOUT THE GRADE POINTS SHOWN ON THE TYPICAL SECTIONS.

SHOULDER CONSTRUCTION:

ASPHALT, EARTH, AND CONCRETE SHOULDER CONSTRUCTION ON THE HIGH SIDE OF SUPERELEVATED CURVES SHALL BE IN ACCORDANCE WITH STD. NO. 560.01.

SIDE ROADS:

THE CONTRACTOR WILL BE REQUIRED TO DO ALL NECESSARY WORK TO PROVIDE SUITABLE CONNECTIONS WITH ALL ROADS, STREETS, AND DRIVES ENTERING THIS PROJECT. THIS WORK WILL BE PAID FOR AT THE CONTRACT UNIT PRICE FOR THE PARTICULAR ITEMS INVOLVED.

GUARDRAIL:

THE GUARDRAIL LOCATIONS SHOWN ON THE PLANS MAY BE ADJUSTED DURING CONSTRUCTION AS DIRECTED BY THE ENGINEER. THE CONTRACTOR SHOULD CONSULT WITH THE ENGINEER PRIOR TO ORDERING GUARDRAIL MATERIAL.

SUBSURFACE PLANS:

NO SUBSURFACE PLANS ARE AVAILABLE ON THIS PROJECT. THE CONTRACTOR SHOULD MAKE HIS OWN INVESTIGATION AS TO THE SUBSURFACE CONDITIONS.

END BENTS:

THE ENGINEER SHALL CHECK THE STRUCTURE END BENT PLANS, DETAILS, AND CROSS-SECTION PRIOR TO SETTING OF THE SLOPE STAKES FOR THE EMBANKMENT OR EXCAVATION APPROACHING A BRIDGE.

UTILITIES:

ANY RELOCATION OF EXISTING UTILITIES WILL BE ACCOMPLISHED BY OTHERS.

RIGHT-OF-WAY MARKERS:

ALL RIGHT-OF-WAY MARKERS ON THIS PROJECT SHALL BE PLACED BY CONTRACT.

EFF. 01-17-12
REV. 11-01-11

2012 ROADWAY ENGLISH STANDARD DRAWINGS

The following Roadway Standards as appear in "Roadway Standard Drawings" Highway Design Branch - N. C. Department of Transportation - Raleigh, N. C., Dated July 18, 2006 are applicable to this project and by reference hereby are considered a part of these plans:

STD.NO.	TITLE
DIVISION 2 - EARTHWORK	
200.03	Method of Clearing - Method III
225.02	Guide for Grading Subgrade - Secondary and Local
225.04	Method of Obtaining Superelevation - Two Lane Pavement
DIVISION 3 - PIPE CULVERTS	
310.10	Driveway Pipe Construction
DIVISION 5 - SUBGRADE, BASES AND SHOULDERS	
560.01	Method of Shoulder Construction - High Side of Superelevated Curve - Method I
DIVISION 8 - INCIDENTALS	
862.01	Guardrail Placement
862.02	Guardrail Installation
862.03	Structure Anchor Units
876.02	Guide for Rip Rap at Pipe Outlets
876.04	Drainage Ditches with Class 'B' Rip Rap

$$$$SYSTIME$$$$
$$$$$$DGN$$$$$$$$$$$$$$$$
$$$$USERNAME$$$$

3/15/06

PROJECT REFERENCE NO.	SHEET NO.
BD-5108S	1-B

Note: Not to Scale

S.U.E. = Subsurface Utility Engineering

STATE OF NORTH CAROLINA
DIVISION OF HIGHWAYS

CONVENTIONAL PLAN SHEET SYMBOLS

BOUNDARIES AND PROPERTY:

- State Line
- County Line
- Township Line
- City Line
- Reservation Line
- Property Line
- Existing Iron Pin — EIP
- Property Corner
- Property Monument — ECM
- Parcel/Sequence Number — 123
- Existing Fence Line
- Proposed Woven Wire Fence
- Proposed Chain Link Fence
- Proposed Barbed Wire Fence
- Existing Wetland Boundary — WLB
- Proposed Wetland Boundary — WLB
- Existing Endangered Animal Boundary — EAB
- Existing Endangered Plant Boundary — EPB

BUILDINGS AND OTHER CULTURE:

- Gas Pump Vent or U/G Tank Cap
- Sign — S
- Well — W
- Small Mine
- Foundation
- Area Outline
- Cemetery
- Building
- School
- Church
- Dam

HYDROLOGY:

- Stream or Body of Water
- Hydro, Pool or Reservoir
- Jurisdictional Stream — JS
- Buffer Zone 1 — BZ 1
- Buffer Zone 2 — BZ 2
- Flow Arrow
- Disappearing Stream
- Spring
- Wetland
- Proposed Lateral, Tail, Head Ditch — FLOW
- False Sump

RAILROADS:

- Standard Gauge — CSX TRANSPORTATION
- RR Signal Milepost — MILEPOST 35
- Switch — SWITCH
- RR Abandoned
- RR Dismantled

RIGHT OF WAY:

- Baseline Control Point
- Existing Right of Way Marker
- Existing Right of Way Line
- Proposed Right of Way Line — RW
- Proposed Right of Way Line with Iron Pin and Cap Marker — RW
- Proposed Right of Way Line with Concrete or Granite Marker — RW
- Existing Control of Access — CA
- Proposed Control of Access — CA
- Existing Easement Line — E
- Proposed Temporary Construction Easement — E
- Proposed Temporary Drainage Easement — TDE
- Proposed Permanent Drainage Easement — PDE
- Proposed Permanent Utility Easement — PUE
- Proposed Permanent Easement with Iron Pin and Cap Marker

ROADS AND RELATED FEATURES:

- Existing Edge of Pavement
- Existing Curb
- Proposed Slope Stakes Cut — C
- Proposed Slope Stakes Fill — F
- Proposed Wheel Chair Ramp — WCR
- Existing Metal Guardrail
- Proposed Guardrail
- Existing Cable Guiderail
- Proposed Cable Guiderail
- Equality Symbol
- Pavement Removal

VEGETATION:

- Single Tree
- Single Shrub
- Hedge
- Woods Line
- Orchard
- Vineyard — Vineyard

EXISTING STRUCTURES:

MAJOR:

- Bridge, Tunnel or Box Culvert — CONC
- Bridge Wing Wall, Head Wall and End Wall — CONC WW

MINOR:

- Head and End Wall — CONC HW
- Pipe Culvert
- Footbridge
- Drainage Box: Catch Basin, DI or JB — CB
- Paved Ditch Gutter
- Storm Sewer Manhole — S
- Storm Sewer — S

UTILITIES:

POWER:

- Existing Power Pole
- Proposed Power Pole
- Existing Joint Use Pole
- Proposed Joint Use Pole
- Power Manhole — P
- Power Line Tower
- Power Transformer
- U/G Power Cable Hand Hole — HH
- H-Frame Pole
- Recorded U/G Power Line — P
- Designated U/G Power Line (S.U.E.*) — P

TELEPHONE:

- Existing Telephone Pole
- Proposed Telephone Pole
- Telephone Manhole — T
- Telephone Booth
- Telephone Pedestal — T
- Telephone Cell Tower
- U/G Telephone Cable Hand Hole — HH
- Recorded U/G Telephone Cable — T
- Designated U/G Telephone Cable (S.U.E.*) — T
- Recorded U/G Telephone Conduit — TC
- Designated U/G Telephone Conduit (S.U.E.*) — TC
- Recorded U/G Fiber Optics Cable — T FO
- Designated U/G Fiber Optics Cable (S.U.E.*) — T FO

WATER:

- Water Manhole — W
- Water Meter
- Water Valve
- Water Hydrant
- Recorded U/G Water Line — W
- Designated U/G Water Line (S.U.E.*) — W
- Above Ground Water Line — A/G Water

TV:

- TV Satellite Dish
- TV Pedestal — C
- TV Tower
- U/G TV Cable Hand Hole — HH
- Recorded U/G TV Cable — TV
- Designated U/G TV Cable (S.U.E.*) — TV
- Recorded U/G Fiber Optic Cable — TV FO
- Designated U/G Fiber Optic Cable (S.U.E.*) — TV FO

GAS:

- Gas Valve
- Gas Meter
- Recorded U/G Gas Line — G
- Designated U/G Gas Line (S.U.E.*) — G
- Above Ground Gas Line — A/G Gas

SANITARY SEWER:

- Sanitary Sewer Manhole
- Sanitary Sewer Cleanout
- U/G Sanitary Sewer Line — SS
- Above Ground Sanitary Sewer — A/G Sanitary Sewer
- Recorded SS Forced Main Line — FSS
- Designated SS Forced Main Line (S.U.E.*) — FSS

MISCELLANEOUS:

- Utility Pole
- Utility Pole with Base
- Utility Located Object
- Utility Traffic Signal Box — S
- Utility Unknown U/G Line — ?UTL
- U/G Tank; Water, Gas, Oil
- A/G Tank; Water, Gas, Oil
- U/G Test Hole (S.U.E.*)
- Abandoned According to Utility Records — AATUR
- End of Information — E.O.I.

PROJECT REFERENCE NO.	SHEET NO.
BD-5108S	1C
R/W SHEET NO.	

SURVEY CONTROL SHEET BD-5108S

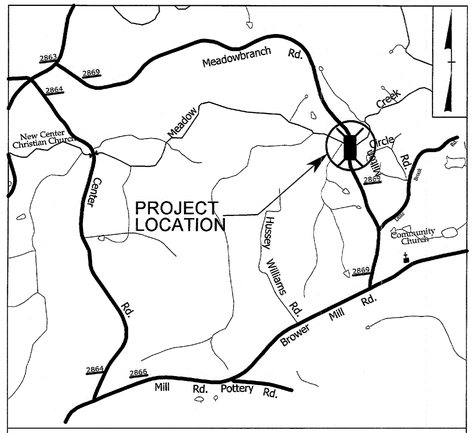

VICINITY MAP

BL POINT	DESC.	NORTH	EAST	ELEVATION	L STATION	OFFSET
1	BD5108S-1	648609.8030	1796818.5540	419.19	15+56.15	18.01 RIGHT
101	BL-101	648062.2817	1796702.0427	447.02	10+00.00	14.82 LEFT
102	BL-102	648350.8689	1796794.8823	416.75	16+27.70	13+32 RIGHT

NAD 83/ NSRS 2007

-L- STA. 16+58.54 END STATE PROJECT 45354.1.20
LOCALIZED PROJECT COORDINATES
N = 648,664.4074 E = 1,796,787.8543

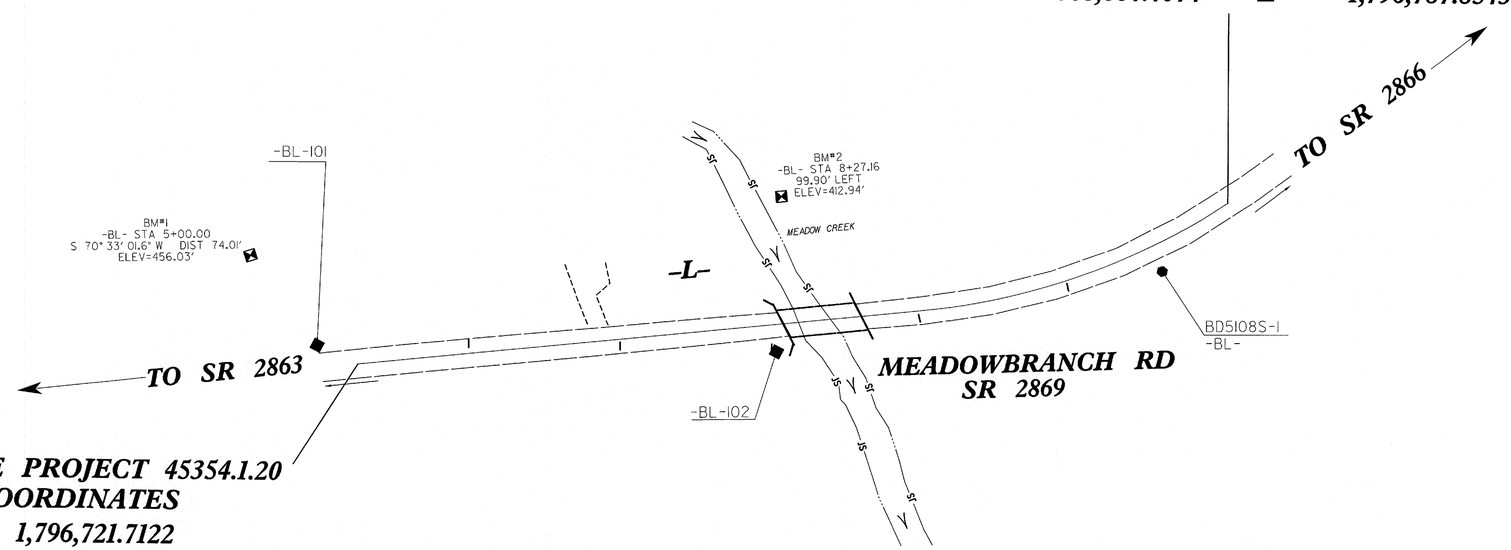

-L- STA. 10+00.00 BEGIN STATE PROJECT 45354.1.20
LOCALIZED PROJECT COORDINATES
N = 648,084.4104 E = 1,796,721.7122

DATUM DESCRIPTION

THE LOCALIZED COORDINATE SYSTEM DEVELOPED FOR THIS PROJECT IS BASED ON THE STATE PLANE COORDINATES ESTABLISHED BY NCDOT FOR MONUMENT "BD5108S-1"
WITH NAD 83/NSRS 2007 STATE PLANE GRID COORDINATES OF
NORTHING: 648609.8030(ft) EASTING: 1796818.5540(ft)
ELEVATION: 419.187(ft)
THE AVERAGE COMBINED GRID FACTOR USED ON THIS PROJECT (GROUND TO GRID) IS: 0.9998691312
THE N.C. LAMBERT GRID BEARING AND LOCALIZED HORIZONTAL GROUND DISTANCE FROM "BD5108S-1" TO -L- STATION IS
S10° 26'37.30"W 534.2431'
ALL LINEAR DIMENSIONS ARE LOCALIZED HORIZONTAL DISTANCES
VERTICAL DATUM USED IS NAVD 88

NOTES:

1. *THE CONTROL DATA FOR THIS PROJECT WAS PROVIDED BY NCDOT.*
   CONTROL POINTS PROVIDED ARE AS FOLLOWS:
   BD5108S-1 N=648609.80 E=1796818.55 ELEV=416.75'

   SITE CALIBRATION INFORMATION HAS NOT BEEN PROVIDED FOR THIS PROJECT. IF FURTHER INFORMATION IS NEEDED, PLEASE CONTACT THE LOCATION AND SURVEYS UNIT.

● *INDICATES GEODETIC CONTROL MONUMENTS USED OR SET FOR HORIZONTAL PROJECT CONTROL BY THE NCDOT LOCATION AND SURVEYS UNIT.*

◆ *INDICATES CONTROL MONUMENTS USED OR SET FOR HORIZONTAL PROJECT CONTROL BY NCDOT.*

NOTE: DRAWING NOT TO SCALE

5/14/99

$$$$$$SYSTIME$$$$$$
$$$$$$DGN$$$$$$$$$$$$$$$$$$$$
$$$$$$ELEV$$$$$$
$$$$$$FLNAME$$$$

PROJECT REFERENCE NO.	SHEET NO.
BD-5108S	2
R/W SHEET NO.	

ROADWAY DESIGN ENGINEER

NORTH CAROLINA PROFESSIONAL SEAL 049912 ENGINEER MICHAEL A. WIESZKA 06-12-12

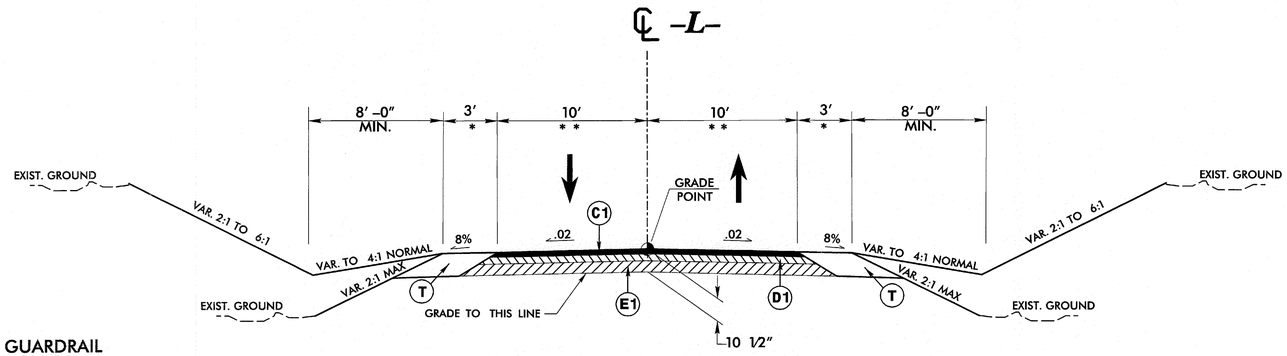

* ADD 4' TO SHOULDERS FOR GUARDRAIL
PAVE SHOULDER TO FACE OF GUARDRAIL

* * WIDTH VARIES
9.38' TO 10.00' STA. 10+25.00 TO 10+75.00

TYPICAL SECTION NO. 1

-L- STA. 10+25.00 TO -L- STA. 12+81.84 (BEGIN BRIDGE)
-L- STA. 13+69.16 (END BRIDGE) TO -L- STA. 16+15.00

PAVEMENT SCHEDULE	
C1	PROP. APPROX. 2" ASPHALT CONCRETE SURFACE COURSE, TYPE SF9.5A, AT AN AVERAGE RATE OF 110 LBS. PER SQ. YD. IN EACH OF TWO LAYERS.
D1	PROP. APPROX. 3" ASPHALT CONCRETE INTERMEDIATE COURSE, TYPE I19.0B, AT AN AVERAGE RATE OF 342 LBS. PER SQ. YD.
E1	PROP. APPROX. 5.5" ASPHALT CONCRETE BASE COURSE, TYPE B25.0B, AT AN AVERAGE RATE OF 627 LBS. PER SQ. YD.
T	EARTH MATERIAL.

NOTE: PAVEMENT EDGE SLOPES ARE 1:1 UNLESS SHOWN OTHERWISE

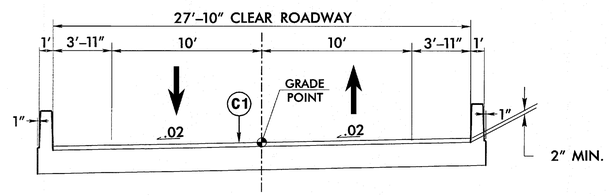

TYPICAL SECTION NO. 2

-L- STA. 12+81.84 (BEGIN BRIDGE)
TO -L- STA. 13+69.16 (END BRIDGE)

5/14/99

$$$$SYSTIME$$$$
$$$$CLEN$$$$DGN$$$$$$$$$$$$$$$$
$$$$USER NAME$$$$

STATE OF
NORTH CAROLINA
DEPT. OF TRANSPORTATION
DIVISION OF HIGHWAYS
RALEIGH, N.C.

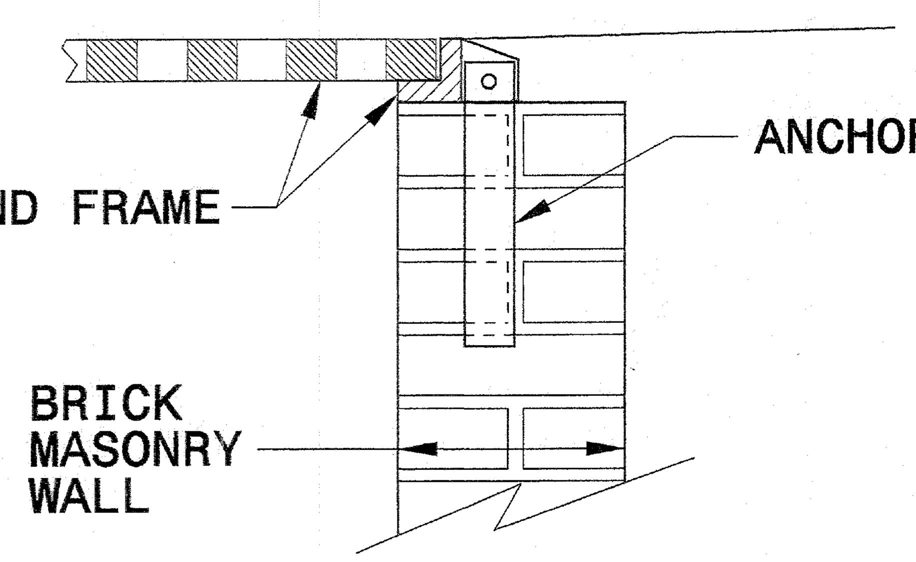

BRICK MASONRY CONSTRUCTION

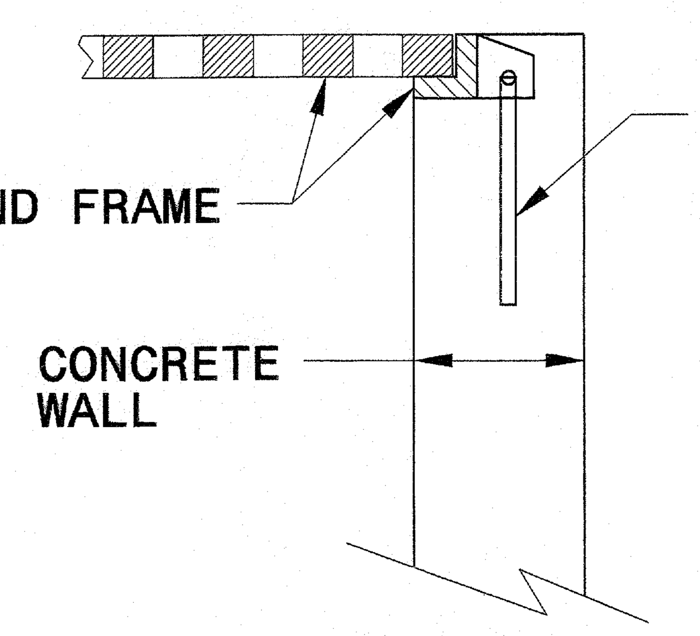

CONCRETE CONSTRUCTION

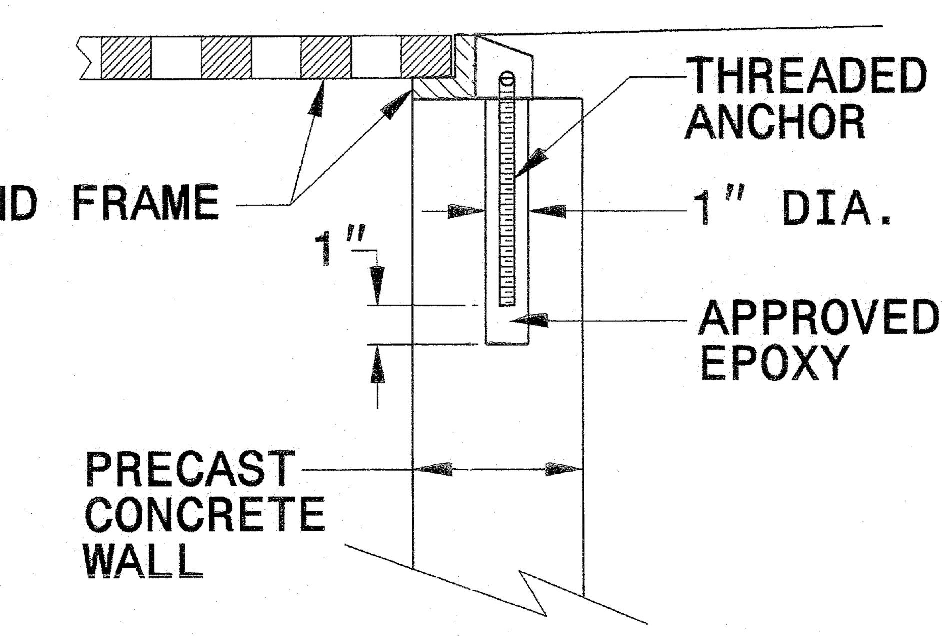

PRECAST CONCRETE CONSTRUCTION

DETAIL SHOWING ANCHORAGE OF FRAME FOR GRATED DROP INLET

NOTE:
CONSTRUCT GRATED DROP INLET TO COINCIDE WITH NORMAL OR SUPERELEVATED SHOULDER OR PAVEMENT SLOPE.

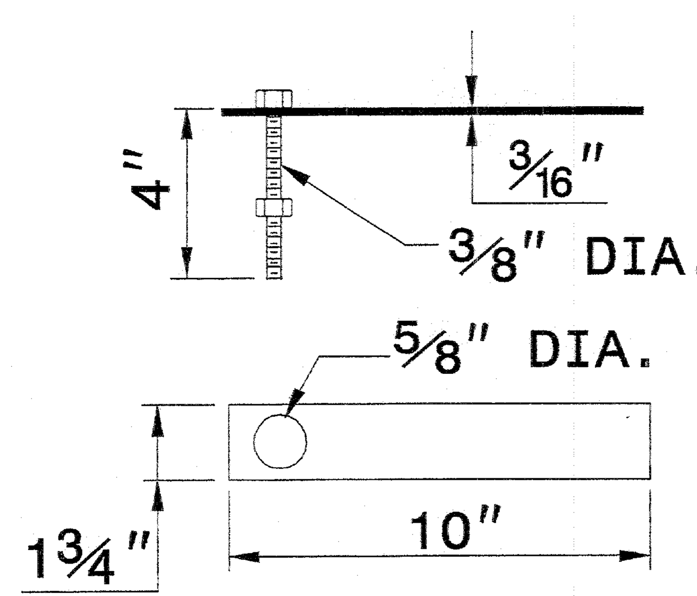

MASONRY ANCHOR
3⁄8" DIA. BOLT WITH PLATE

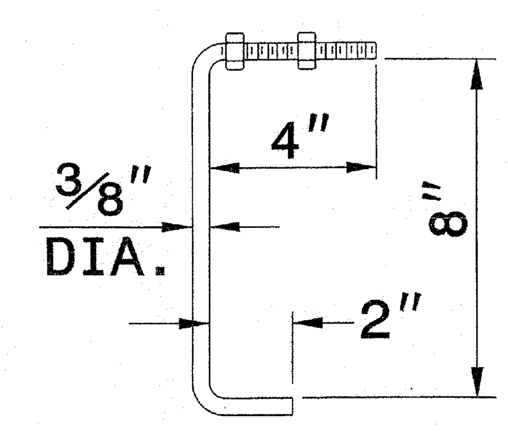

CONCRETE ANCHOR
3⁄8" DIA. BENT BAR

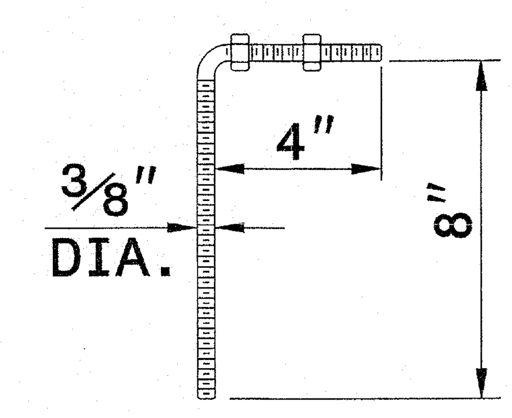

PRECAST CONCRETE ANCHOR
3⁄8" DIA. BENT BAR

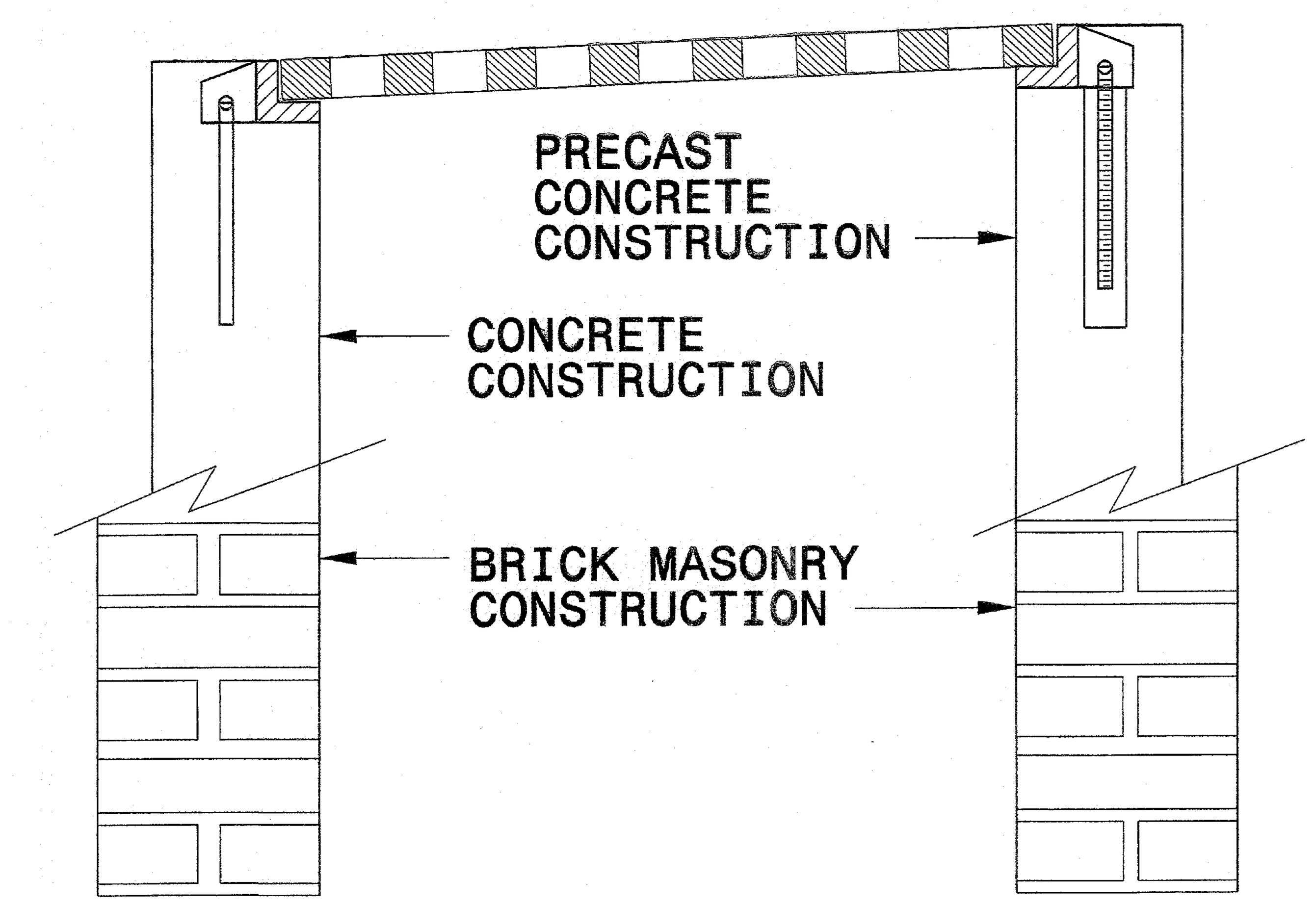

FRAME AND GRATE INSTALLATION FOR NORMAL CROWN AND SUPERELEVATED SECTIONS

ENGLISH DETAIL DRAWING FOR
ANCHORAGE FOR FRAMES
BRICK/CONCRETE/PRECAST CONCRETE

SHEET 1 OF 1
840D25

STATE OF
NORTH CAROLINA
DEPT. OF TRANSPORTATION
DIVISION OF HIGHWAYS
RALEIGH, N.C.

ENGLISH DETAIL DRAWING FOR
ANCHORAGE FOR FRAMES
BRICK/CONCRETE/PRECAST CONCRETE

SHEET 1 OF 1
840D25

PROJECT SERVICES UNIT
STANDARDS AND SPECIAL DESIGN
Office 919-250-4128 FAX 919-250-4119

SEE PLATE FOR TITLE

ORIGINAL BY: 2006 STD 840.25 DATE: 07/18/06
MODIFIED BY: E.E. WARD DATE: 9/25/06
CHECKED BY: [signature] DATE: 11/13/06
FILE SPEC.:

$$$$$$SYSTIME$$$$$
$$$$$$$$$$$$DGN$$$$$$$$$$$$$$$$
$$$$USERNAME$$$$

STATE OF NORTH CAROLINA
DEPT. OF TRANSPORTATION
DIVISION OF HIGHWAYS
RALEIGH, N.C.

ENGLISH DETAIL DRAWING FOR
BRIDGE APPROACH FILLS
CORED SLAB & BOX BEAM BRIDGES
SUB REGIONAL TIER

SHEET 1 OF 2
422D11

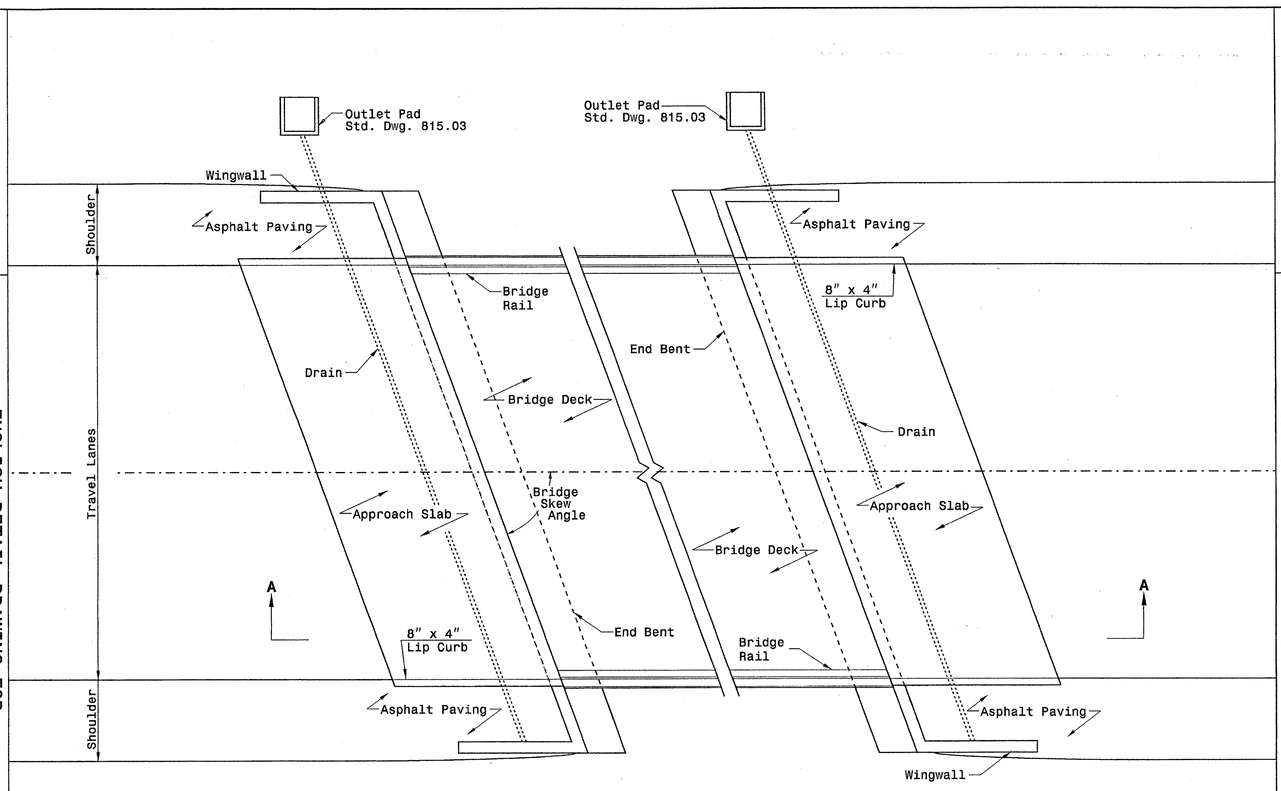

PLAN VIEW
12′ APPROACH SLAB

STATE OF NORTH CAROLINA
DEPT. OF TRANSPORTATION
DIVISION OF HIGHWAYS
RALEIGH, N.C.

ENGLISH DETAIL DRAWING FOR
BRIDGE APPROACH FILLS
CORED SLAB & BOX BEAM BRIDGES
SUB REGIONAL TIER

SHEET 1 OF 2
422D11

STATE OF NORTH CAROLINA
DEPT. OF TRANSPORTATION
DIVISION OF HIGHWAYS
RALEIGH, N.C.

ENGLISH DETAIL DRAWING FOR
BRIDGE APPROACH FILLS
CORED SLAB & BOX BEAM BRIDGES
SUB REGIONAL TIER

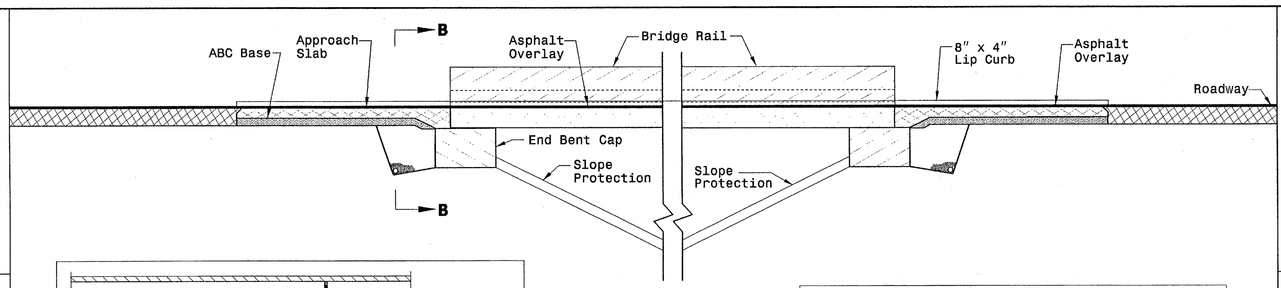

SECTION A-A

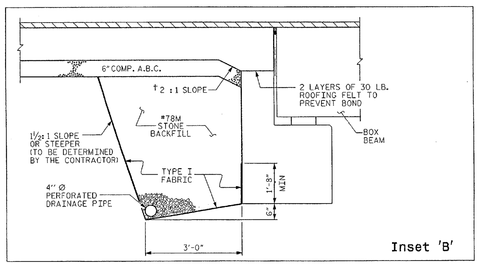

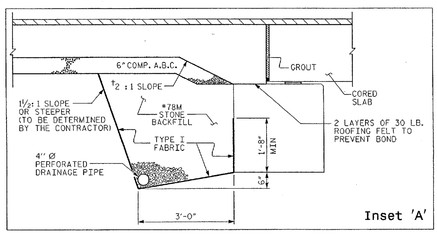

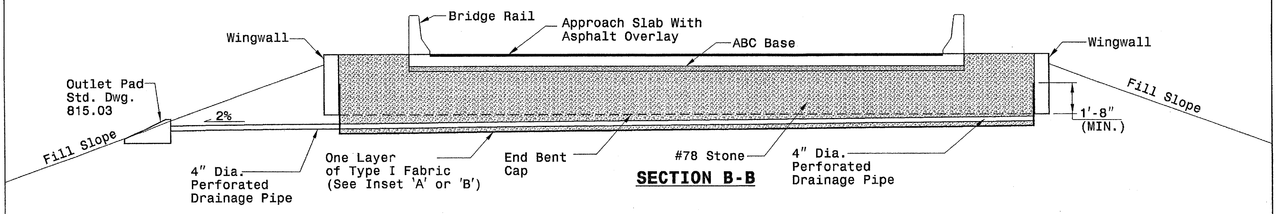

SECTION B-B

12′ APPROACH SLAB

STATE OF NORTH CAROLINA
DEPT. OF TRANSPORTATION
DIVISION OF HIGHWAYS
RALEIGH, N.C.

ENGLISH DETAIL DRAWING FOR
BRIDGE APPROACH FILLS
CORED SLAB & BOX BEAM BRIDGES
SUB REGIONAL TIER

SHEET 2 OF 2
422D11

PROJECT SERVICES UNIT
STANDARDS AND SPECIAL DESIGN
OFFICE 919-250-4128 FAX 919-250-4119

BRIDGE APPROACH FILLS
CORED SLAB & BOX BEAM BRIDGES
SUB REGIONAL TIER

ORIGINAL BY: K. A. Kempf DATE: 6-10-08
MODIFIED BY: DATE:
CHECKED BY: DATE: 2/16/07
FILE SPEC.: kkempf\english\bridge approach fills.dgn

PROJECT REFERENCE NO.
SHEET NO. 2B

30-JUL-2009 08:48
$:\contracts\contracts\special details\ericward\stds\06' stds to special details\30001\0300d01.dgn
jhowerton AT PS237501

5/14/99

STATE OF NORTH CAROLINA
DEPT. OF TRANSPORTATION
DIVISION OF HIGHWAYS
RALEIGH, N.C.

7-06

ENGLISH DETAIL DRAWING FOR
METHOD OF PIPE INSTALLATION

FLEXIBLE PIPE

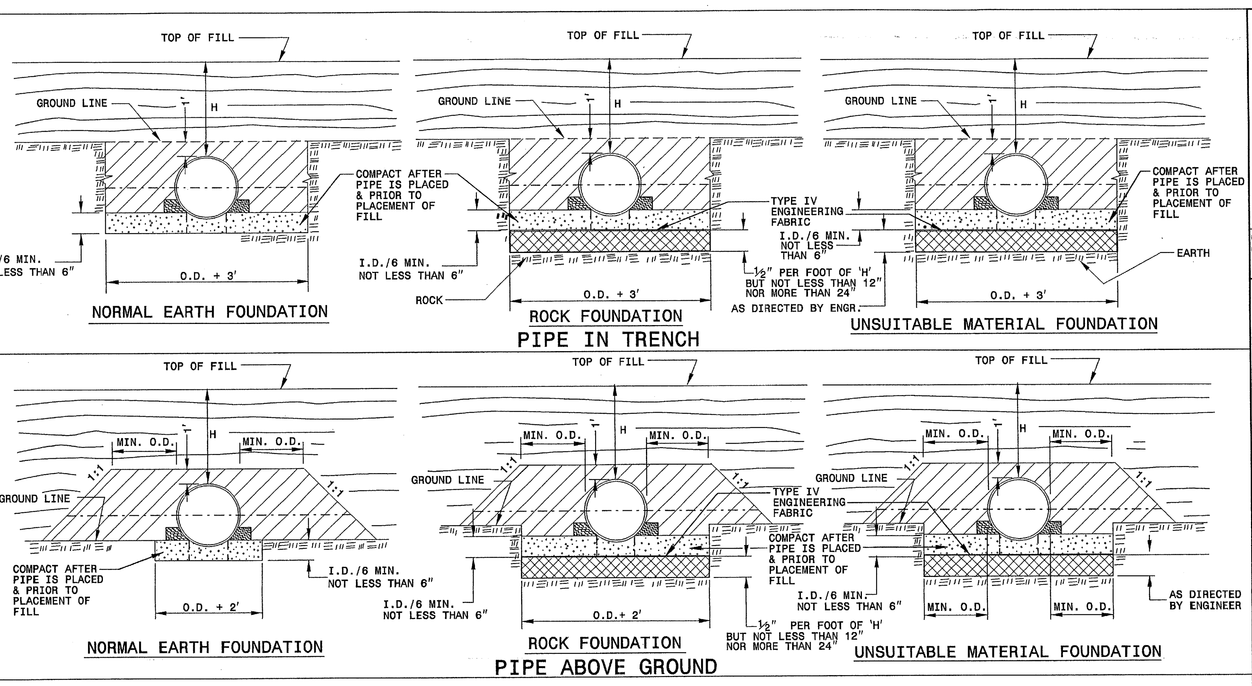

GENERAL NOTES:

I.D. = THE MAXIMUM HORIZONTAL INSIDE DIAMETER DIMENSION.

O.D. = THE MAXIMUM HORIZONTAL OUTSIDE DIAMETER DIMENSION.

H = THE FILL HEIGHT MEASURED VERTICALLY AT ANY POINT ALONG THE PIPE FROM THE TOP OF THE PIPE TO THE TOP OF THE EMBANKMENT AT THAT POINT.

TAKE CARE TO FULLY COMPACT HAUNCH ZONE OF PIPE BACKFILL.

LOOSELY PLACED SELECT MATERIAL CLASS III OR CLASS II, TYPE 1 FOR PIPE BEDDING. LEAVE SECTION DIRECTLY BENEATH PIPE UNCOMPACTED AS PIPE SEATING AND BACKFILL WILL ACCOMPLISH COMPACTION.

DO NOT OPERATE HEAVY EQUIPMENT OVER ANY PIPE CULVERT UNTIL THE PIPE CULVERT HAS BEEN PROPERLY BACKFILLED AND COVERED WITH AT LEAST 3 FEET OF APPROVED MATERIAL.

SPRINGLINE OF PIPE

SELECT BACKFILL MATERIAL CLASS III OR CLASS II, TYPE 1 ABOVE AND BELOW SPRINGLINE.

APPROVED SUITABLE LOCAL MATERIAL.

UNDISTURBED EARTH MATERIAL

SELECT MATERIAL CLASS V OR VI FOR FOUNDATION CONDITIONING. ENCAPSULATE WITH ENGINEERING FABRIC AS DIRECTED BY THE ENGINEER.

SHEET 1 OF 3
300D01

STATE OF NORTH CAROLINA
DEPT. OF TRANSPORTATION
DIVISION OF HIGHWAYS
RALEIGH, N.C.

7-06

ENGLISH DETAIL DRAWING FOR
METHOD OF PIPE INSTALLATION

RIGID PIPE

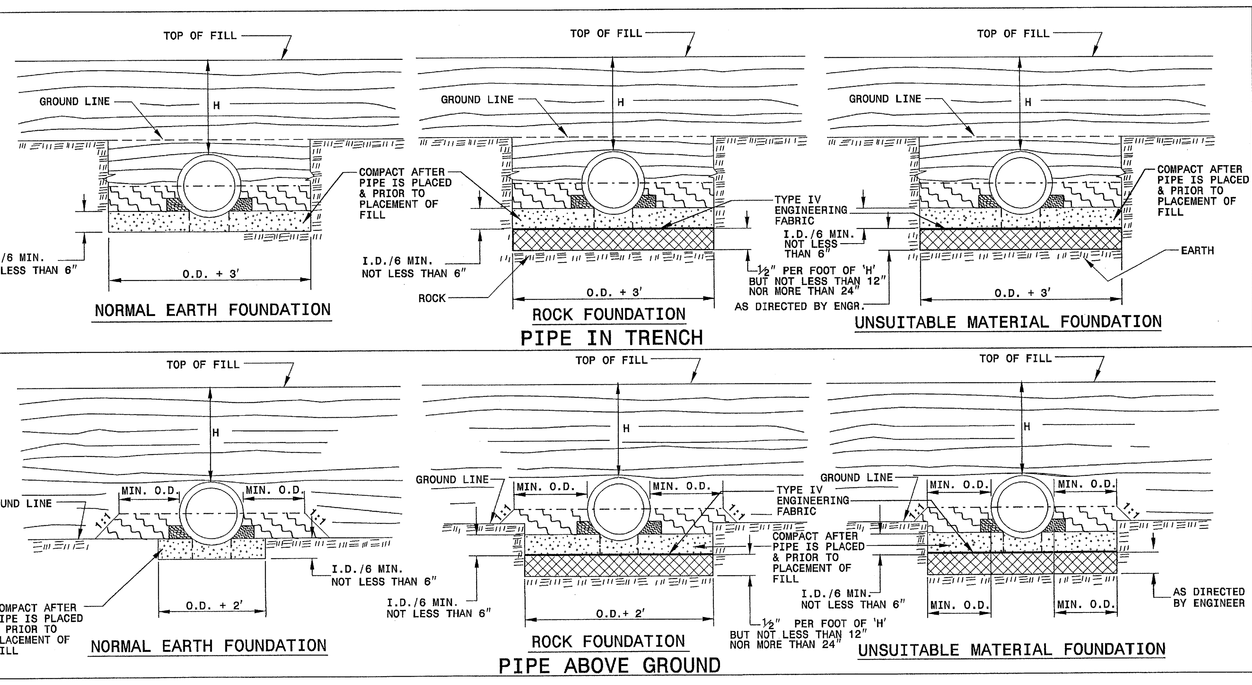

GENERAL NOTES:

I.D. = THE MAXIMUM HORIZONTAL INSIDE DIAMETER DIMENSION.

O.D. = THE MAXIMUM HORIZONTAL OUTSIDE DIAMETER DIMENSION.

H = THE FILL HEIGHT MEASURED VERTICALLY AT ANY POINT ALONG THE PIPE FROM THE TOP OF THE PIPE TO THE TOP OF THE EMBANKMENT AT THAT POINT.

TAKE CARE TO FULLY COMPACT HAUNCH ZONE OF PIPE BACKFILL.

LOOSELY PLACED SELECT MATERIAL CLASS III OR CLASS II, TYPE 1 FOR PIPE BEDDING. LEAVE SECTION DIRECTLY BENEATH PIPE UNCOMPACTED AS PIPE SEATING AND BACKFILL WILL ACCOMPLISH COMPACTION.

DO NOT OPERATE HEAVY EQUIPMENT OVER ANY PIPE CULVERT UNTIL THE PIPE CULVERT HAS BEEN PROPERLY BACKFILLED AND COVERED WITH AT LEAST 3 FEET OF APPROVED MATERIAL.

SPRINGLINE OF PIPE

SELECT BACKFILL MATERIAL CLASS III OR CLASS II, BELOW SPRINGLINE.

APPROVED SUITABLE LOCAL MATERIAL ABOVE SPRINGLINE.

UNDISTURBED EARTH MATERIAL

SELECT MATERIAL CLASS V OR VI FOR FOUNDATION CONDITIONING. ENCAPSULATE WITH ENGINEERING FABRIC AS DIRECTED BY THE ENGINEER.

SHEET 2 OF 3
300D01

PROJECT SERVICES UNIT
STANDARDS AND SPECIAL DESIGN
Office 919-250-4128 FAX 919-250-4119

ORIGINAL BY: KKempf
MODIFIED BY: DATE: 5-15-09
CHECKED BY: DATE: 7/8/09
FILE SPEC/ericward/stds/stdsto details/30001/0300d01.dgn

SEE PLATE FOR TITLE

PROJECT REFERENCE NO.

SHEET NO. 2C

STATE OF NORTH CAROLINA
DEPT. OF TRANSPORTATION
DIVISION OF HIGHWAYS
RALEIGH, N.C.

7-06

ENGLISH DETAIL DRAWING FOR
METHOD OF PIPE INSTALLATION
FILL HEIGHT TABLES

SHEET 3 OF 3
300D01

FLEXIBLE PIPE

Round Corrugated Steel Pipe
2 2/3 x ½ corrugation **

Diameter (inches)	Minimum cover (inches)	Maximum Height of Cover (feet) (Ga) 16	14	12	10	8
12	12	204	256			
15	12	162	204			
18	12	135	169	239		
21	12	115	145	204		
24	12	100	126	178		
30	12	79	100	142		
36	12	65	83	117	152	
42	12	55	70	100	130	160
48	12	48	61	87	113	139
54	12		54	77	100	123
60	12			69	90	111
66	12				81	100
72	12				74	91
78	12					81
84	12					69

Round Corrugated Aluminum Pipe
2 2/3 x ½ corrugation **

Diameter (inches)	Minimum cover (inches)	Maximum Height of Cover (feet) (Ga) 16	14	12	10	8
12	12	123	155	218	281	344
15	12	98	123	174	224	275
18	12	81	102	144	187	228
21	12	69	87	123	160	195
24	12	60	76	108	139	171
27	12		67	95	123	151
30	12		60	85	111	136
36	12		50	71	92	113
42	12			60	78	96
48	12			52	68	84
54	12			46	50	74
60	12				50	62
66	12					51
72	12					41

** FOR DIFFERENT CORRUGATIONS AND ARCH PIPES REFER TO ROADWAY DESIGN MANUAL OR MANUFACTURERS SPECIFICATION.

REFER TO THE FOLLOWING FOR PIPE SPECIFICATIONS

CSP - AASHTO M36
CAAP - AASHTO M196
HDPE - AASHTO M294
PVC - ASTM F949 or AASHTO M304

NOTES: FILL HEIGHTS SHOWN WERE CALCULATED USING AASHTO LRFD BRIDGE DESIGN SPECIFICATIONS

1' MINIMUM COVER FOR ALL SIDE DRAIN PIPE IN ACCORDANCE WITH THE STANDARD SPECIFICATIONS

HDPE - * (Minimum fill) 2' for pipe diameters ≥ 12" and ≤ 60"
* (Maximum fill) 20' for pipe diameters ≤ 24"
17' for pipe diameters ≥ 30" and ≤ 60"

PVC - * (Minimum fill) 2' for pipe diameters ≥ 12" and ≤ 36"
* (Maximum fill) 30' for pipe diameters ≥ 12" and ≤ 36"

* FILL HEIGHT IS MEASURED FROM THE TOP OF THE PIPE TO THE BOTTOM OF THE PAVEMENT STRUCTURE

RIGID PIPE

RCP - * (Minimum fill) 1' for Class IV & CLASS V
2' for Class III & Class II

* (Maximum fill) 10' - Class II pipe
20' - Class III pipe
30' - Class IV pipe
40' - Class V pipe

(For fills > 40' & < 80' use LRFD Direct Design Method)

* FILL HEIGHT IS MEASURED FROM THE TOP OF THE PIPE TO THE BOTTOM OF THE PAVEMENT STRUCTURE

REFER TO THE FOLLOWING FOR PIPE SPECIFICATIONS

RCP - AASHTO M170

NOTES: FILL HEIGHTS SHOWN WERE CALCULATED USING AASHTO LRFD BRIDGE DESIGN SPECIFICATIONS

1' MINIMUM COVER FOR ALL SIDE DRAIN PIPE IN ACCORDANCE WITH THE STANDARD SPECIFICATIONS

STATE OF NORTH CAROLINA
DEPT. OF TRANSPORTATION
DIVISION OF HIGHWAYS
RALEIGH, N.C.

7-06

ENGLISH DETAIL DRAWING FOR
METHOD OF PIPE INSTALLATION
FILL HEIGHT TABLES

SHEET 3 OF 3
300D01

PROJECT SERVICES UNIT
STANDARDS AND SPECIAL DESIGN
Office 919-250-4128 FAX 919-250-4119

SEE PLATE FOR TITLE

ORIGINAL BY: KKempf DATE: 5-15-09
MODIFIED BY: DATE:
CHECKED BY: DATE: 7/30/09
FILE SPEC: ericward/stds/stdstodetails/30001/0300d01.dgn

PROJECT REFERENCE NO.

SHEET NO. 2D

6/21/00

COMPUTED BY: _____ DATE: _____
CHECKED BY: _____ DATE: _____

STATE OF NORTH CAROLINA
DIVISION OF HIGHWAYS

PROJECT REFERENCE NO.	SHEET NO.
BD-5108S	3

ITEM NUMBER	SECTION NUMBER	DESCRIPTION	QUANTITY	UNIT
0000100000–N	800	MOBILIZATION	1	LS
0030000000–N	SP	BRIDGE APPROACH FILL–SUB REGIONAL TIER, STATION 13+25.50 –L–	1	LS
0043000000–N	226	GRADING	1	LS
0050000000–E	226	SUPPLEMENTARY CLEARING & GRUBBING	1	ACR
0134000000–E	240	DRAINAGE DITCH EXCAVATION	5	CY
0196000000–E	270	GEOTEXTILE FOR SOIL STABILIZATION	270	SY
0318000000–E	300	FOUNDATION CONDITIONING MATERIAL, MINOR STRUCTURES	14	TON
0335200000–E	305	15" DRAINAGE PIPE	12	LF
0335300000–E	305	18" DRAINAGE PIPE	104	LF
1220000000–E	545	INCIDENTAL STONE	100	TON
1489000000–E	610	ASPHALT CONC BASE COURSE, TYPE B25.0B	610	TON
1498000000–E	610	ASPHALT CONC INTERMEDIATE COURSE, TYPE I19.0B	330	TON
1525000000–E	610	ASPHALT CONC SURFACE COURSE, TYPE SF9.5A	270	TON
1575000000–E	620	ASPHALT BINDER FOR PLANT MIX	65	TON
2286000000–N	840	MASONRY DRAINAGE STRUCTURES	1	EA
2364200000–N	840	FRAME WITH TWO GRATES, STD 840.20	1	EA
2556000000–E	846	SHOULDER BERM GUTTER	25	LF
3030000000–E	862	STEEL BM GUARDRAIL	25	LF
3150000000–N	862	ADDITIONAL GUARDRAIL POSTS	5	EA
3215000000–N	862	GUARDRAIL ANCHOR UNITS, TYPE III	4	EA
3270000000–N	SP	GUARDRAIL ANCHOR UNITS, TYPE 350	4	EA
3649000000–E	876	RIP RAP, CLASS B	14	TON
3656000000–E	876	GEOTEXTILE FOR DRAINAGE	278	SY
4589000000–E	SP	GENARIC TRAFFIC CONTROL ITEM	1	LS
4810000000–E	1205	PAINT PAVEMENT MARKING LINES (4")	1,180	LF
6000000000–E	1605	TEMPORARY SILT FENCE	500	LF
6006000000–E	1610	STONE FOR EROSION CONTROL, CLASS A	80	TON
6009000000–E	1610	STONE FOR EROSION CONTROL, CLASS B	145	TON
6012000000–E	1610	SEDIMENT CONTROL STONE	75	TON
6015000000–E	1615	TEMPORARY MULCHING	1	ACR
6018000000–E	1620	SEED FOR TEMPORARY SEEDING	50	LB
6021000000–E	1620	FERTILIZER FOR TEMPORARY SEEDING	0.25	TON
6024000000–E	1622	TEMPORARY SLOPE DRAINS	200	LF
6029000000–E	SP	SAFETY FENCE	200	LF
6030000000–E	1630	SILT EXCAVATION	120	CY
6036000000–E	1631	MATTING FOR EROSION CONTROL	6,310	SY
6037000000–E	SP	COIR FIBER MAT	400	SY
6038000000–E	SP	PERMANENT SOIL REINFORCEMENT MAT	20	SY
6042000000–E	1632	1/4" HARDWARE CLOTH	185	LF
6071010000–E	SP	WATTLE	45	LF
6071020000–E	SP	POLYACRYLAMIDE (PAM)	30	LB
6084000000–E	1660	SEEDING AND MULCHING	3	ACR
6087000000–E	1660	MOWING	3	ACR
6090000000–E	1661	SEED FOR REPAIR SEEDING	50	LB
6093000000–E	1661	FERTILIZER FOR REPAIR SEEDING	0.25	TON
6096000000–E	1662	SEED FOR SUPPLEMENTAL SEEDING	50	LB
6108000000–E	1665	FERTILIZER TOPDRESSING	0.75	TON
6114500000–N	1667	SPECIALIZED HAND MOWING	10	MHR
6117000000–N	SP	RESPONSE FOR EROSION CONTROL	13	EA
8035000000–N	402	REMOVAL OF EXISTING STRUCTURE AT STATION 13+25.50 –L–	1	LS
8121000000–N	412	UNCLASSIFIED STRUCTURE EXCAVATION AT STATION 13+25.50 –L–	1	LS
8182000000–E	420	CLASS A CONCRETE (BRIDGE)	34.2	CY
8210000000–N	422	BRIDGE APPROACH SLABS, STATION 13+25.50 –L–	1	LS
8217000000–E	425	REINFORCING STEEL (BRIDGE)	5,762	LB
8364000000–E	450	HP 12X53 STEEL PILES	100	LF
8391000000–N	450	STEEL PILE POINTS	10	EA
8505000000–E	460	VERTICAL CONCRETE BARRIER RAIL	170	LF
8608000000–E	876	RIP RAP CLASS II (2'–0" THICK)	295	TON
8622000000–E	876	GEOTEXTILE FOR DRAINAGE	327	SY
8657000000–N	430	ELASTOMERIC BEARINGS	1	LS
8753100000–E	430	3'–0" X 2'–9" PRESTRESSED CONCBOX BEAMS	850	LF

$$$$SYSTIME$$$$
$$$$DGN$$$$
$$$$USERNAME$$$$

COMPUTED BY: AJN DATE: 11/02/11
CHECKED BY: SLS DATE: 11/15/11

PROJECT REFERENCE NO.	SHEET NO.
BD-5108S	3A

STATE OF NORTH CAROLINA
DIVISION OF HIGHWAYS

SUB–REGIONAL & REGIONAL
LIST OF PIPES, ENDWALLS, ETC. (FOR PIPES 48" & UNDER)

STATION / SIZE / THICKNESS OR GAUGE	LOCATION (LT,RT, OR CL)	STRUCTURE NO. FROM	STRUCTURE NO. TO	TOP ELEVATION	INVERT ELEVATION	INVERT ELEVATION	SLOPE CRITICAL	DRAINAGE PIPE (RCP, CSP, CAAP, HDPE, or PVC) 12"	15"	18"	24"	30"	36"	42"	48"	DO NOT USE RCP	DO NOT USE CSP	DO NOT USE CAAP	DO NOT USE HDPE
-L- 13+90.00	LT	0401	0402	418.6	415.9	415.4	NO		12'										
-L- 12+30.00	LT	0403			420.8	413.0	NO			60'						X			
-L- 12+00.00	RT	0404			422.2	417.8	NO			44'									
TOTAL									12'	104'									

STATION	C.S. PIPE 12" .064	15" .064	18" .064	24" .064	36" .079	42" .109	48" .109	R.C. PIPE (CLASS III) 15"	18"	24"	30"	36"	42"	48"	R.C. PIPE (CLASS IV) 12"	15"	18"	24"	30"	36"	42"	48"
-L- 13+90.00																						
-L- 12+30.00																						
-L- 12+00.00																						
TOTAL																						

STATION	**" R. C. PIPE (CLASS V)	**" R. C. PIPE CULVERTS, CONTRACTOR DESIGN PIPE	**" R. C. PIPE CULVERTS, CONTRACTOR DESIGN PIPE	15" SIDE DRAIN PIPE	18" SIDE DRAIN PIPE	ENDWALLS STD. 838.01, STD. 838.11 OR STD. 838.80 (UNLESS NOTED OTHERWISE) CU. YDS. R.C.P.	C.S.P.	QUANTITIES FOR DRAINAGE STRUCTURES PER EACH (0' THRU 5.0')	* TOTAL L.F. FOR PAY QUANTITY SHALL BE COL. 'A' + (1.3 X COL.'B') LIN. *FT. A 5.0' THRU 10.0'	B 10.0' AND ABOVE	C.B. STD. 840.01 OR STD. 840.02	FRAME, GRATES AND HOOD STANDARD 840.03 TYPE OF GRATE E	F	G		CONCRETE TRANSITIONAL SECTION CATCH BASIN	DROP INLET		G.D.I. FRAME WITH TWO GRATES STD. 840.20	G.D.I. FRAME WITH GRATE STD. 840.22	G.D.I. (N.S.) FRAME WITH GRATE STD. 840.24	G.D.I. (N.S.) FRAME WITH TWO GRATES STD. 840.24	T.B.G.D.I. STD. 840.35	CORR. STEEL ELBOWS NO. & SIZE	CONC. COLLARS CL. "B" C.Y. STD 840.72	CONC. & BRICK PIPE PLUG, C.Y. STD. 840.71	PIPE REMOVAL LIN.FT.	REMARKS
-L- 13+90.00								1											1				1					
-L- 12+30.00																												
-L- 12+00.00																												
TOTAL								1											1				1					

ABBREVIATIONS

C.B.	CATCH BASIN
N.D.I.	NARROW DROP INLET
D.I.	DROP INLET
G.D.I.	GRATED DROP INLET
G.D.I. (N.S.)	GRATED DROP INLET (NARROW SLOT)
J.B.	JUNCTION BOX
M.H.	MANHOLE
T.B.D.I.	TRAFFIC BEARING DROP INLET
T.B.J.B.	TRAFFIC BEARING JUNCTION BOX

$$$$$$$$SYSTIME$$$$
$$$$$$$$$$$$$$$$$$$$$$$$$DGN$$$$$$
$$$$USERNAME$$$$$$$$$$

5/14/99

PROJECT REFERENCE NO.	SHEET NO.
BD-5108S	3B
R/W SHEET NO.	

STATE OF NORTH CAROLINA
DIVISION OF HIGHWAYS

SUMMARY OF EARTHWORK
IN CUBIC YARDS

LOCATION	UNCLASSIFIED EXCAVATION	UNDERCUT	EMBT+%	BORROW	WASTE
-L- STA. 10+25.00 TO BRIDGE	146		606	460	
SUBTOTAL	146		606	460	
BRIDGE TO -L- STA. 16+15.00	19		540	540	
SUBTOTAL	19		540	540	
TOTAL	165		1165	1000	
LOSS DUE TO CLEAR & GRUB.					
WASTE IN LEU OF BORROW					
PROJECT TOTAL	165		1165	1000	
EST. 5% TO REPLACE TOP SOIL ON BORROW PIT				50	
GRAND TOTAL	165		1165	1050	
SAY	170				

NOTE: Approximate quantities only. Unclassified Excavation, Fine Grading, Clearing and Grubbing, and Removal of Existing Pavement will be paid for at the contract lump sum price for "Grading."

SUMMARY OF PAVEMENT REMOVAL
IN SQUARE YARDS

LOCATION	ASPHALT REMOVAL	ASPHALT BREAK UP	CONCRETE REMOVAL	CONCRETE BREAK UP
-L- STA. 10+25 TO 13+06	574			
-L- STA. 13+59 TO 16+15	552			
TOTAL	1126			
SAY	1130			

GUARDRAIL SUMMARY

SURVEY LINE	BEGINNING STATION	END STATION	LOCATION	LENGTH			WARRENT POINT		"N" DIST. FROM E.O.L.	TOTAL SHOULDER WIDTH	FLARE LENGTH		W		ANCHORS			REMARKS
				STRAIGHT	SHOP CURVED	DOUBLE FACED	APPROACH END	TRAILING END			APPROACH END	TRAILING END	APPROACH END	TRAILING END	GRAU-350	AT-1	TYPE III	
-L-	12+11	12+86	RT	75.00'			12+86		4'	7'					1		1	
-L-	12+03	12+78	LT	75.00'				12+78	4'	7'					1		1	
-L-	13+65	14+40	LT	75.00'			13+65		4'	7'					1		1	
-L-	13+73	14+48	RT	75.00'				13+73	4'	7'					1		1	
SUBTOTAL				300.00'														
LESS ANCHOR DEDUCTIONS																		
GRAU-350, 4 @ 50' =				-200.00'														
TYPE III 4 @ 18.75' =				-75.00'														
			TOTAL	25.00'			ADDITIONAL GUARDRAIL POSTS - 5 EA											
			SAY	25.00'											4		4	

$$$$$SYSTIME$$$$
$$$$$DGN$$$$$$$$$$$$$$$$$$$$
$$$$$CELL$$$$$$$$$$$$$$$$$$$$
$$$$$CELNAME$$$$

5/14/99

PROJECT REFERENCE NO.	SHEET NO.
BD-5108S	4
R/W SHEET NO.	
ROADWAY DESIGN ENGINEER	HYDRAULICS ENGINEER

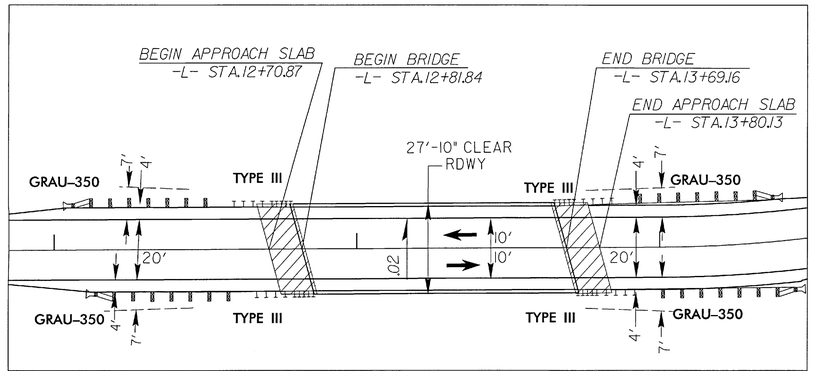

Sketch showing Dimensions of Pavement and Shoulder in Relation to Proposed Bridge Width

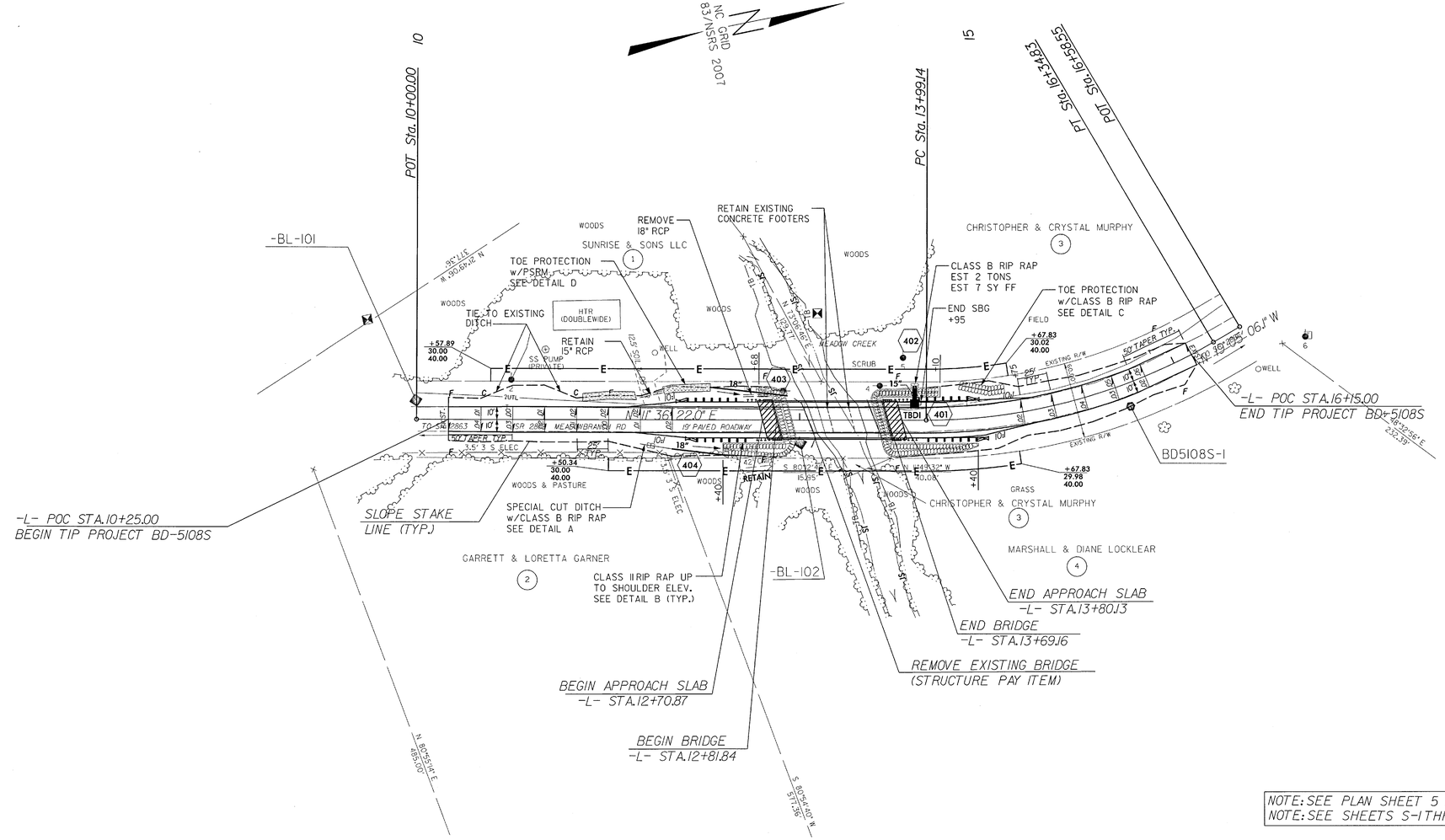

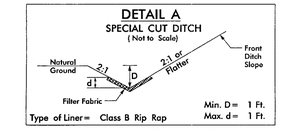

STA. 11+75 TO STA. 12+00 RT

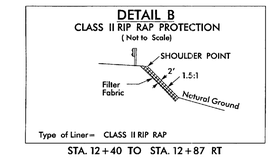

STA. 12+40 TO STA. 12+87 RT
STA. 13+72 TO STA. 14+40 RT
STA. 13+64 TO STA. 14+10 LT

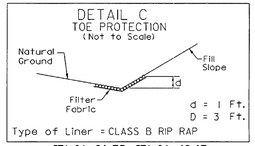

STA. 14+26 TO STA. 14+63 LT

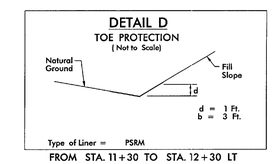

FROM STA. 11+30 TO STA. 12+30 LT

NOTE: SEE PLAN SHEET 5 FOR PROFILE
NOTE: SEE SHEETS S-1 THRU S-14 FOR STRUCTURES PLANS

5/14/99

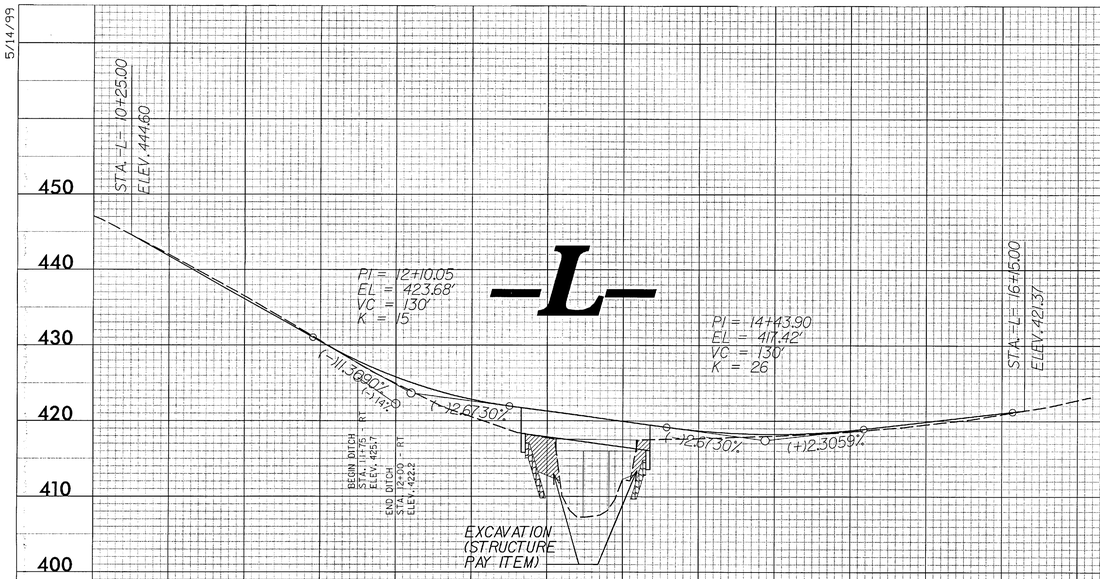

BRIDGE HYDRAULIC DATA

DESIGN DISCHARGE	=	1400	CFS
DESIGN FREQUENCY	=	25	YRS
DESIGN HW ELEVATION	=	414.4	FT
BASE DISCHARGE	=	1900	CFS
BASE FREQUENCY	=	100	YRS
BASE HW ELEVATION	=	415.4	FT
OVERTOPPING DISCHARGE	=	3200	CFS
OVERTOPPING FREQUENCY	=	100 +	YRS
OVERTOPPING ELEVATION	=	418.2	FT
DATE OF SURVEY	=	11-17-2011	
W.S. ELEVATION AT DATE OF SURVEY	=	408.0	FT

PROJECT REFERENCE NO.	SHEET NO.
BD-5108S	5

ROADWAY DESIGN ENGINEER

NORTH CAROLINA PROFESSIONAL SEAL 029712 ENGINEER AGNIESZKA J. NAU

06-12-12

HYDRAULICS ENGINEER

NORTH CAROLINA PROFESSIONAL SEAL 019732 ENGINEER SHIHCHEN FUH

6-12-12

NOTE: FOR PLAN VIEW SEE SHEET 4
SEE SHEETS S-1 THRU S-14 FOR STRUCTURES PLANS

$$$$$SYSTIME$$$$
$$$$$$$$$$$$$$DGN$$$$$$$$$$$$$$$
$$$$USERNAME$$$$

STATE OF NORTH CAROLINA
DIVISION OF HIGHWAYS

TRANSPORTATION MANAGEMENT PLAN

RANDOLPH COUNTY

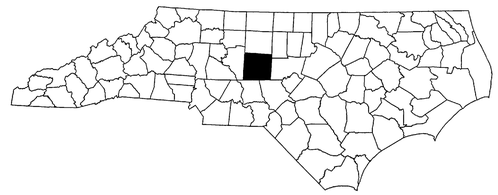

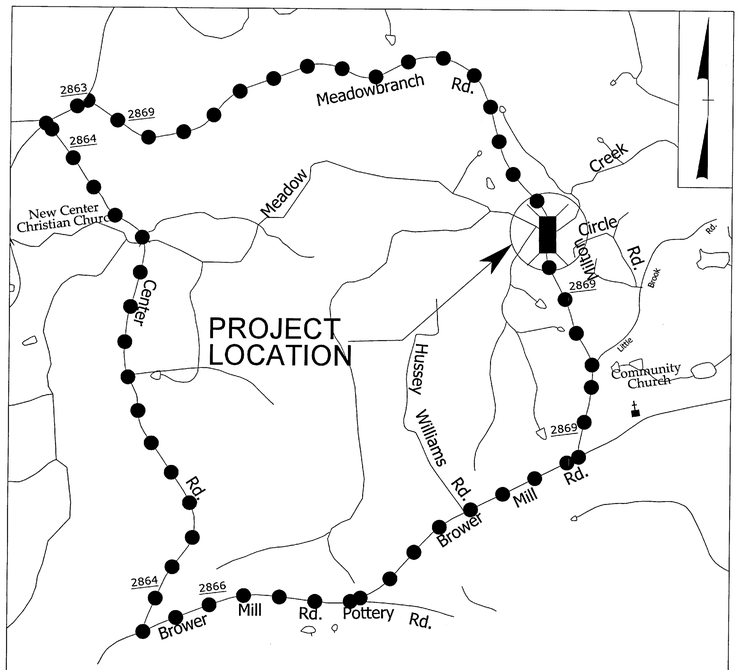

VICINITY MAP

OFFSITE DETOUR

INDEX OF SHEETS

SHEET NO.	TITLE
TMP-1	TITLE SHEET, AND INDEX OF SHEETS
TMP-1A	LIST OF APPLICABLE ROADWAY STANDARD DRAWINGS, LEGEND, AND TEMPORARY PAVEMENT MARKING
TMP-1B	TRANSPORTATION OPERATIONS PLAN: (MANAGEMENT STRATEGIES, GENERAL NOTES AND LOCAL NOTES & PHASING)
TMP-2	DETOUR ROUTE AND BARRICADE
SN-1	OFF-SITE DETOUR SIGN DESIGN

SHEET NO.
TMP-1

TIP PROJECT:BD-5108S

WORK ZONE SAFETY & MOBILITY
"from the MOUNTAINS to the COAST"

N.C.D.O.T. WORK ZONE TRAFFIC CONTROL
1561 MAIL SERVICE CENTER (MSC) RALEIGH, NC 27699-1561
750 N. GREENFIELD PARKWAY, GARNER, NC 27529 (DELIVERY)
PHONE: (919) 773-2800 FAX: (919) 771-2745

J. S. BOURNE, P.E. STATE TRAFFIC MANAGEMENT ENGINEER

_____ TRAFFIC CONTROL PROJECT ENGINEER

_____ TRAFFIC CONTROL PROJECT DESIGN ENGINEER

_____ TRAFFIC CONTROL DESIGN ENGINEER

DIVISION OF HIGHWAYS · STATE OF NORTH CAROLINA · DEPARTMENT OF TRANSPORTATION · WORK ZONE TRAFFIC CONTROL

APPROVED: _____

DATE: _____

SEAL

NORTH CAROLINA PROFESSIONAL SEAL 028392 ENGINEER JAMES T. REGISTER

6/14/2012

PROJ. REFERENCE NO.	SHEET NO.
BD-5108S	TMP-1A

ROADWAY STANDARD DRAWINGS

THE FOLLOWING ROADWAY STANDARDS AS SHOWN IN "ROADWAY STANDARD DRAWINGS" - PROJECT SERVICES UNIT - N.C. DEPARTMENT OF TRANSPORTATION - RALEIGH, N.C., DATED JANAUARY 2012 ARE APPLICABLE TO THIS PROJECT AND BY REFERENCE HEREBY ARE CONSIDERED A PART OF THESE PLANS:

STD. NO.	TITLE
1101.01	WORK ZONE ADVANCE WARNING SIGNS
1101.03	TEMPORARY ROAD CLOSURES
1101.05	WORK ZONE VEHICLE ACCESSES
1101.11	TRAFFIC CONTROL DESIGN TABLES
1110.01	STATIONARY WORK ZONE SIGNS
1145.01	BARRICADES - TYPE III

LEGEND

GENERAL

- DIRECTION OF TRAFFIC FLOW
- DIRECTION OF PEDESTRIAN TRAFFIC FLOW
- EXIST. PVMT.
- NORTH ARROW
- PROPOSED PVMT.
- WORK AREA
- REMOVAL
- USER DEFINED (IF NEEDED)
- USER DEFINED (IF NEEDED)

TRAFFIC CONTROL DEVICES

- BARRICADE (TYPE III)
- CONE
- DRUM
- SKINNY DRUM
- TUBULAR MARKER
- TEMPORARY CRASH CUSHION
- FLASHING ARROW PANEL (TYPE C)
- FLAGGER
- LAW ENFORCEMENT
- TRUCK MOUNTED IMPACT ATTENUATOR (TMIA)
- CHANGEABLE MESSAGE SIGN

TEMPORARY SIGNING

- PORTABLE SIGN
- STATIONARY SIGN
- STATIONARY OR PORTABLE SIGN

SIGNALS

- EXISTING
- PROPOSED
- TEMPORARY

PAVEMENT MARKINGS

- EXISTING LINES
- TEMPORARY LINES

PAVEMENT MARKERS

- CRYSTAL/CRYSTAL
- CRYSTAL/RED
- YELLOW/YELLOW

PAVEMENT MARKING SYMBOLS

- PAVEMENT MARKING SYMBOLS

TEMPORARY PAVEMENT MARKING

NOT APPLICABLE

APPROVED:_____ DATE:_____

SEAL

NORTH CAROLINA PROFESSIONAL SEAL 028392 ENGINEER CLIFTON T. REGISTER

6/14/2012

DIVISION OF HIGHWAYS STATE OF NORTH CAROLINA DEPARTMENT OF TRANSPORTATION WORK ZONE TRAFFIC CONTROL

ROADWAY STANDARD DRAWINGS & LEGEND

PROJ. REFERENCE NO.	SHEET NO.
BD-5108S	TMP-2

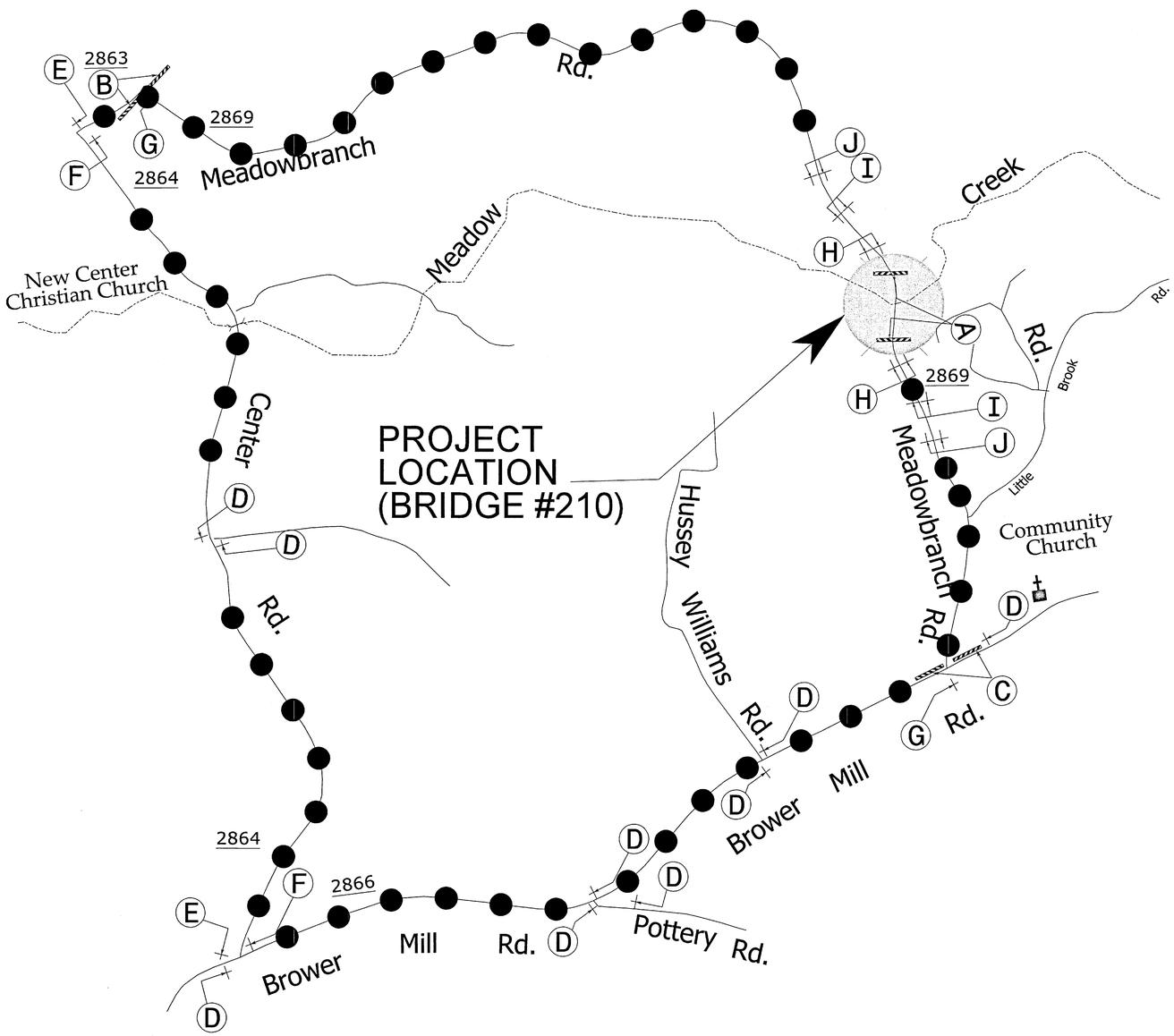

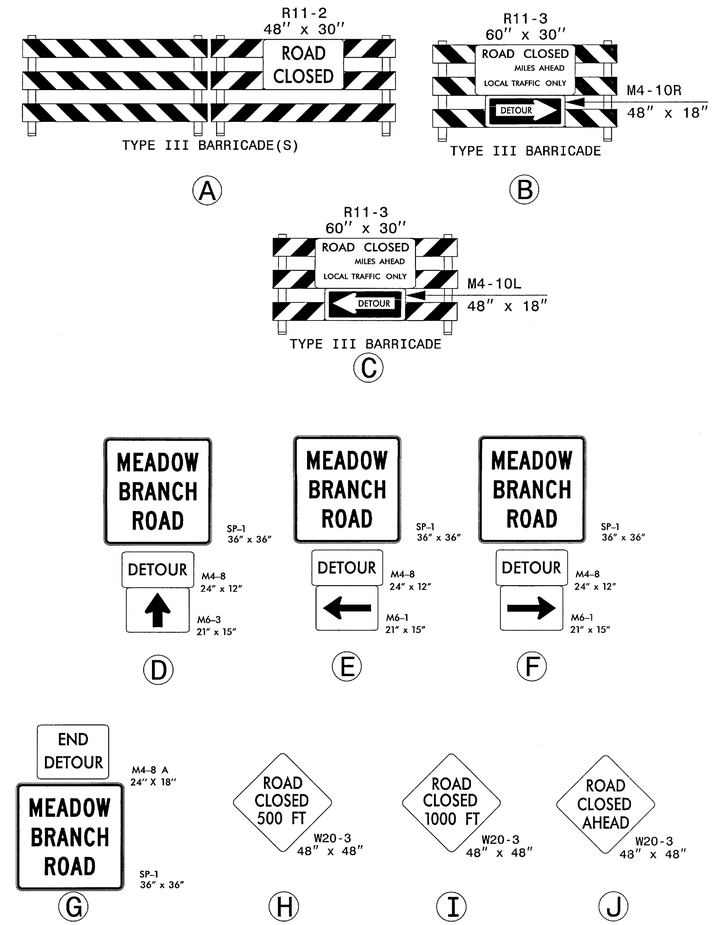

SEPI ENGINEERING & CONSTRUCTION

Sepi Engineering Group
3025 Wade Avenue
Raleigh, NC 27605
Phone: (919)-789-9977
Fax: (919)-789-9591

TRANSPORTATION TRAFFIC SURVEYING ENVIRONMENTAL SITE CIVIL INSPECTIONS CONSTRUCTION

APPROVED: _____ DATE: _____

SEAL

NORTH CAROLINA PROFESSIONAL SEAL 028359 ENGINEER JASON T. REGISTER

6/11/2012

DIVISION OF HIGHWAYS
STATE OF NORTH CAROLINA
DEPARTMENT OF TRANSPORTATION
WORK ZONE TRAFFIC CONTROL

OFF-SITE DETOUR

PROJ. REFERENCE NO.	SHEET NO.
BD-5108S	SN-1

SEPI ENGINEERING & CONSTRUCTION
Sepi Engineering Group
1025 Wade Avenue
Raleigh, NC 27605
Phone: (919)-789-9977
Fax: (919)-789-9591
TRANSPORTATION TRAFFIC SURVEYING ENVIRONMENTAL SITE CIVIL INSPECTIONS CONSTRUCTION

SIGN NUMBER: SP-1
TYPE: STATIONARY
QUANTITY: SEE PLANS

BACKG COLOR:Fluorescent Orange
COPY COLOR:Black

SIGN WIDTH: 36"
HEIGHT: 36"
TOTAL AREA: 9.0 Sq.Ft.

BORDER TYPE: RECESSED
RECESS: 0.38"
WIDTH: 0.63"
RADII: 1.50"

MAT'L: 0.125" (3.2 mm) ALUMINUM
0.079" COMPOSITE

DESIGN BY: R DRAYTON
PROJECT ID: BD-5108S
CHECKED BY: A NAU
DIV: 8
DATE: Oct 25, 2011

USE NOTES

1. Legend and border shall be direct applied black non-reflective sheeting.
2. Background shall be Type VII, VIII, or IX (prismatic) fluorescent orange retroreflective sheeting.

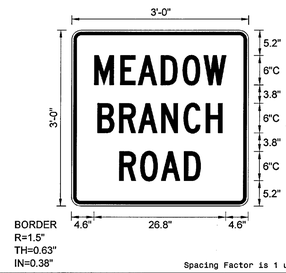

Spacing Factor is 1 unless specified otherwise

LETTER POSITIONS

Letter spacings are to start of next letter

									Series/Size Text Length
		M	E	A	D	O	W		C 2000
	4.6	5.3	3.6	4.7	4.4	4.3	4.6	4.6	26.8
		B	R	A	N	C	H		C 2000
	5.3	4.4	3.9	4.7	4.6	4.6	3.4	5.3	25.4
		R	O	A	D				C 2000
	9.7	4.3	4.3	4.7	3.4	9.7			16.6

FILENAME: Detour

SEPI ENGINEERING & CONSTRUCTION SIGN DETAIL

APPROVED: _____ DATE: _____

SEAL

NORTH CAROLINA PROFESSIONAL SEAL 028392 ENGINEER CLINTON T. REGISTER

6/19/2012

DIVISION OF HIGHWAYS
STATE OF NORTH CAROLINA
DEPARTMENT OF TRANSPORTATION
WORK ZONE TRAFFIC CONTROL

OFF-SITE DETOUR SIGN DESIGN

WBS: 45354.1.20 TIP PROJECT: BD-5108S

STATE	STATE PROJECT REFERENCE NO.	SHEET NO.	TOTAL SHEETS
N.C.	BD-5108S	EC-1	

STATE PROJ. NO.	F.A. PROJ. NO.	DESCRIPTION

STATE OF NORTH CAROLINA
DIVISION OF HIGHWAYS

PLAN FOR PROPOSED
HIGHWAY EROSION CONTROL

RANDOLPH COUNTY

BRIDGE NO. 210 ON SR 2869
OVER MEADOW BRANCH

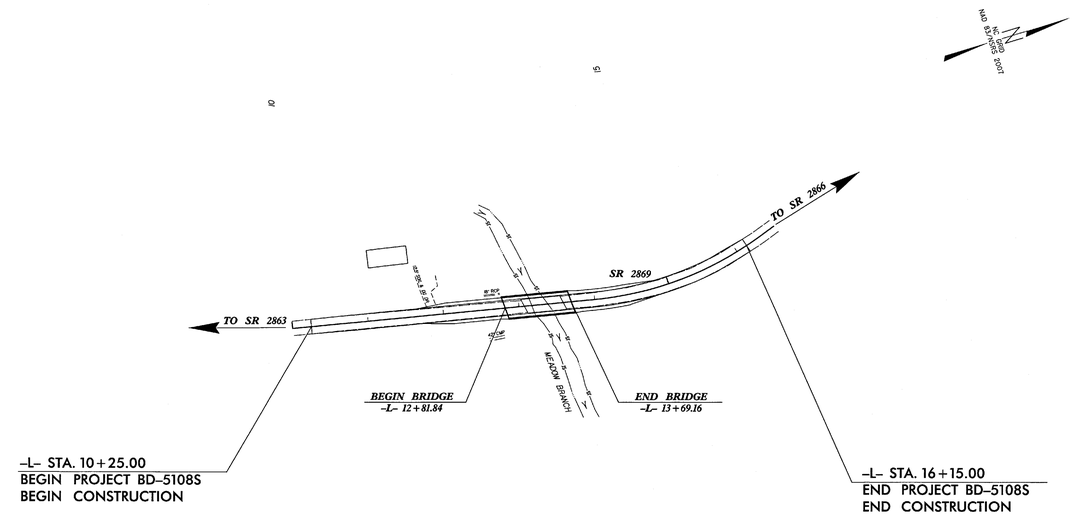

EROSION AND SEDIMENT CONTROL MEASURES

Std. #	Description	Symbol
1630.03	Temporary Silt Ditch	TSD
1630.05	Temporary Diversion	TD
1605.01	Temporary Silt Fence	
1606.01	Special Sediment Control Fence	
1622.01	Temporary Berms and Slope Drains	
1630.02	Silt Basin Type B	
1633.01	Temporary Rock Silt Check Type-A	
	Temporary Rock Silt Check Type-A with Matting and Polyacrylamide (PAM)	
1633.02	Temporary Rock Silt Check Type-B	
	Wattle / Coir Fiber Wattle	
	Wattle / Coir Fiber Wattle with Polyacrylamide (PAM)	
1634.01	Temporary Rock Sediment Dam Type-A	
1634.02	Temporary Rock Sediment Dam Type-B	
1635.01	Rock Pipe Inlet Sediment Trap Type-A	
1635.02	Rock Pipe Inlet Sediment Trap Type-B	
1630.04	Stilling Basin	
1630.06	Special Stilling Basin	
	Rock Inlet Sediment Trap:	
1632.01	Type A	A
1632.02	Type B	B
1632.03	Type C	C
	Skimmer Basin	
	Tiered Skimmer Basin	
	Infiltration Basin	

THIS PROJECT CONTAINS EROSION CONTROL PLANS FOR CLEARING AND GRUBBING PHASE OF CONSTRUCTION.

Florence & Hutcheson
CONSULTING ENGINEERS
5121 Kingdom Way, Suite 100 Raleigh, NC 27607
NC License No: F-0258

GRAPHIC SCALE

25 0 50
PLANS

25 0 50
PROFILE (HORIZONTAL)

5 0 10
PROFILE (VERTICAL)

ROADSIDE ENVIRONMENTAL UNIT
DIVISION OF HIGHWAYS
STATE OF NORTH CAROLINA

LEVEL III CERTIFIED BY:
ALEXANDER SNIDER, E.I.
CERTIFICATION NUMBER: 3064
ISSUED: MAY 7, 2012

THESE EROSION AND SEDIMENT CONTROL PLANS COMPLY WITH THE REGULATIONS SET FORTH BY THE NCG-010000 GENERAL CONSTRUCTION PERMIT EFFECTIVE AUGUST 3, 2011 ISSUED BY THE NORTH CAROLINA DEPARTMENT OF ENVIRONMENT AND NATURAL RESOURCES DIVISION OF WATER QUALITY.

Prepared In the Office of:

FLORENCE & HUTCHESON
5121 KINGDOM WAY, SUITE 100
RALEIGH NC 27607
NC License No: F-0258

2012 STANDARD SPECIFICATIONS

Roadway Standard Drawings

The following roadway english standards as appear in "Roadway Standard Drawings"- Roadway Design Unit - N. C. Department of Transportation - Raleigh, N. C., dated January 2012 and the latest revison thereto are applicable to this project and by reference hereby are considered a part of these plans.

1604.01	Railroad Erosion Control Detail	1632.01	Rock Inlet Sediment Trap Type A
1605.01	Temporary Silt Fence	1632.02	Rock Inlet Sediment Trap Type B
1606.01	Special Sediment Control Fence	1632.03	Rock Inlet Sediment Trap Type C
1607.01	Gravel Construction Entrance	1633.01	Temporary Rock Silt Check Type A
1622.01	Temporary Berms and Slope Drains	1633.02	Temporary Rock Silt Check Type B
1630.01	Riser Basin	1634.01	Temporary Rock Sediment Dam Type A
1630.02	Silt Basin Type B	1634.02	Temporary Rock Sediment Dam Type B
1630.03	Temporary Silt Ditch	1635.01	Rock Pipe Inlet Sediment Trap Type A
1630.04	Stilling Basin	1635.02	Rock Pipe Inlet Sediment Trap Type B
1630.05	Temporary Diversion	1640.01	Coir Fiber Baffle
1630.06	Special Stilling Basin	1645.01	Temporary Stream Crossing
1631.01	Matting Installation		

jlcx:\Evans\5/7/2012 Project:(rdl)rdd(wbd5108S_hyd_erosion_title.dgn
Florence & Hutcheson, Inc.

PROJECT REFERENCE NO.	SHEET NO.
BD-5108S	EC-2
R/W SHEET NO.	
ROADWAY DESIGN ENGINEER	HYDRAULICS ENGINEER

WATTLE WITH POLYACRYLAMIDE (PAM) DETAIL

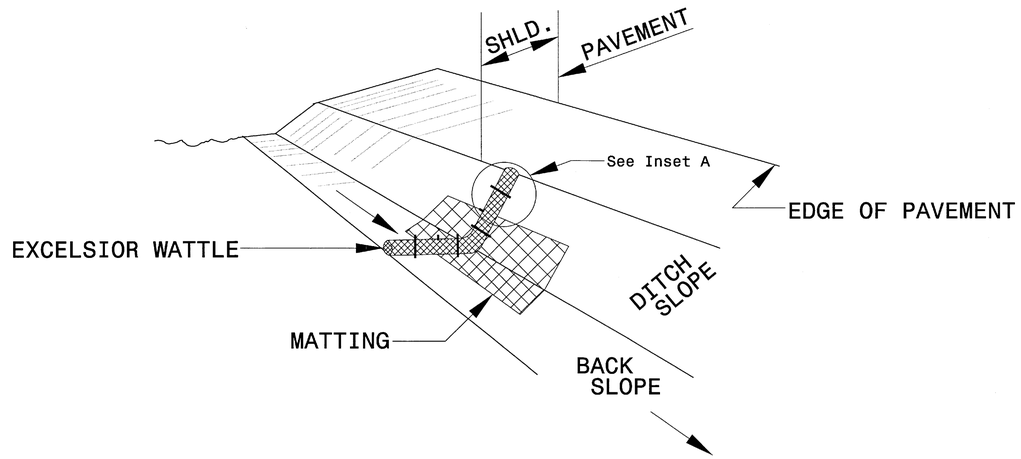

ISOMETRIC VIEW

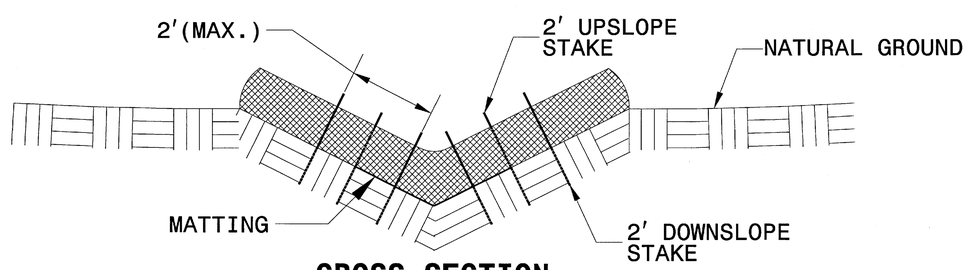

CROSS SECTION VEE DITCH

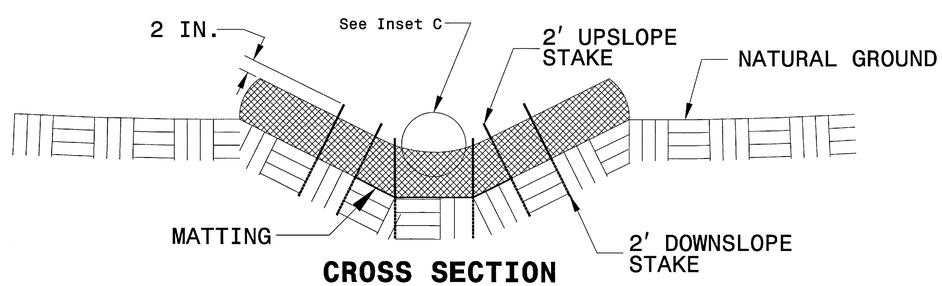

CROSS SECTION TRAPEZOIDAL DITCH

NOTES:

USE MINIMUM 12 IN. DIAMETER EXCELSIOR WATTLE.

USE 2 FT. WOODEN STAKES WITH A 2 IN. BY 2 IN. NOMINAL CROSS SECTION.

ONLY INSTALL WATTLE(S) TO A HEIGHT IN DITCH SO FLOW WILL NOT WASH AROUND WATTLE AND SCOUR DITCH SLOPES AND AS DIRECTED.

INSTALL A MINIMUM OF 2 UPSLOPE STAKES AND 4 DOWNSLOPE STAKES AT AN ANGLE TO WEDGE WATTLE TO BOTTOM OF DITCH.

PROVIDE STAPLES MADE OF 0.125 IN. DIAMETER STEEL WIRE FORMED INTO A U SHAPE NOT LESS THAN 12" IN LENGTH.

INSTALL STAPLES APPROXIMATELY EVERY 1 LINEAR FOOT ON BOTH SIDES OF WATTLE AND AT EACH END TO SECURE IT TO THE SOIL.

INSTALL MATTING IN ACCORDANCE WITH SECTION 1631 OF THE STANDARD SPECIFICATIONS.

PRIOR TO POLYACRYLAMIDE (PAM) APPLICATION, OBTAIN A SOIL SAMPLE FROM PROJECT LOCATION, AND FROM OFFSITE MATERIAL, AND ANALYZE FOR APPROPRIATE PAM FLOCCULANT TO BE APPLIED TO EACH WATTLE.

INITIALLY APPLY 2 OUNCES OF ANIONIC OR NEUTRALLY CHARGED PAM OVER WATTLE WHERE WATER WILL FLOW AND 1 OUNCE OF PAM ON MATTING ON EACH SIDE OF WATTLE. REAPPLY PAM AFTER EVERY RAINFALL EVENT THAT IS EQUAL TO OR EXCEEDS 0.50 IN.

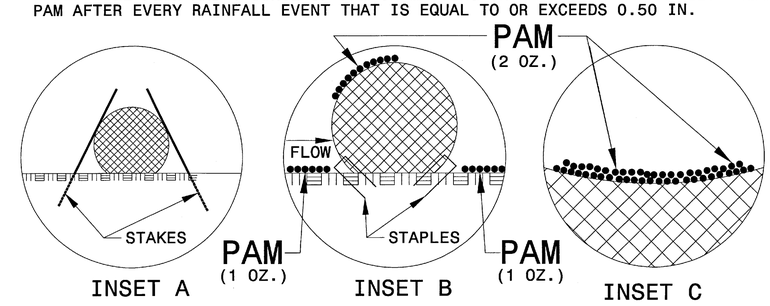

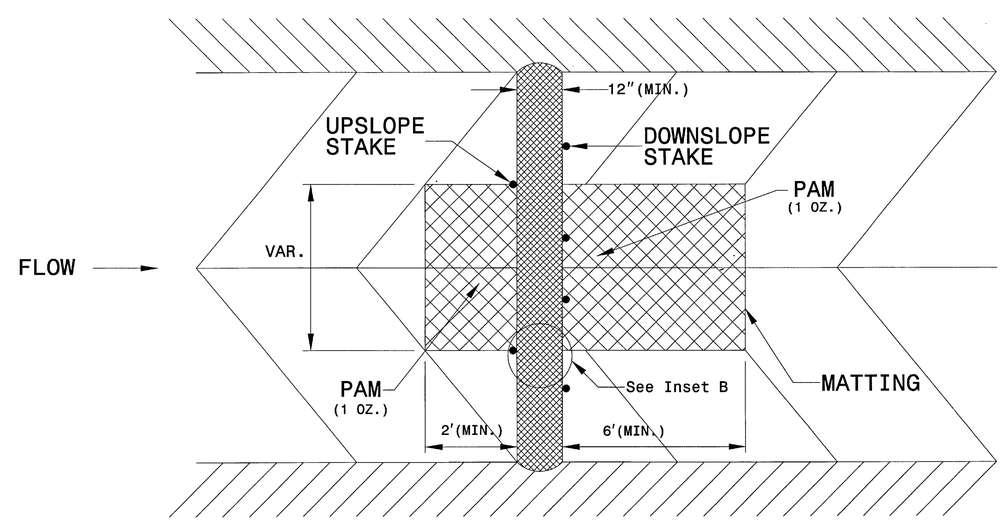

TOP VIEW

PROJECT REFERENCE NO.	SHEET NO.
BD-5108S	EC-2A
R/W SHEET NO.	
ROADWAY DESIGN ENGINEER	HYDRAULICS ENGINEER

TEMPORARY ROCK SILT CHECK TYPE 'A' WITH EXCELSIOR MATTING AND POLYACRYLAMIDE (PAM)

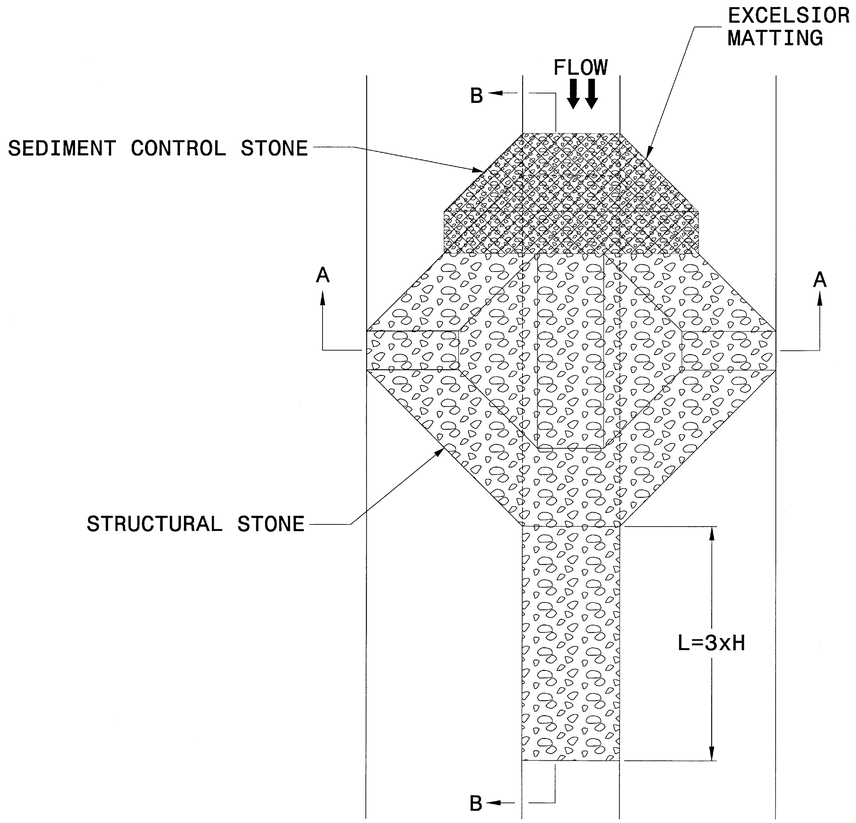

PLAN

NOTES

USE EXCELSIOR FOR MATTING MATERIAL AND ANCHOR MATTING SECTION AT TOP AND BOTTOM WITH CLASS B STONE.

PRIOR TO POLYACRYLAMIDE (PAM) APPLICATION, OBTAIN A SOIL SAMPLE FROM PROJECT LOCATION, AND FROM OFFSITE MATERIAL, AND ANALYZE FOR APPROPRIATE PAM FLOCCULANT TO BE APPLIED TO EACH ROCK SILT CHECK.

INITIALLY APPLY 3.5 OUNCES OF POLYACRYLAMIDE (PAM) TO TOP OF MATTING SECTION AND AFTER EVERY RAINFALL EVENT THAT EQUALS OR EXCEEDS 0.50 INCHES.

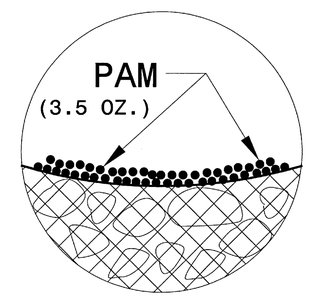

INSET A

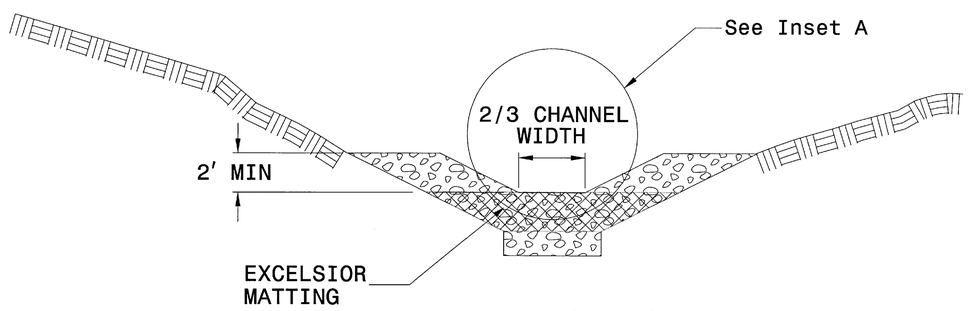

SECTION A-A

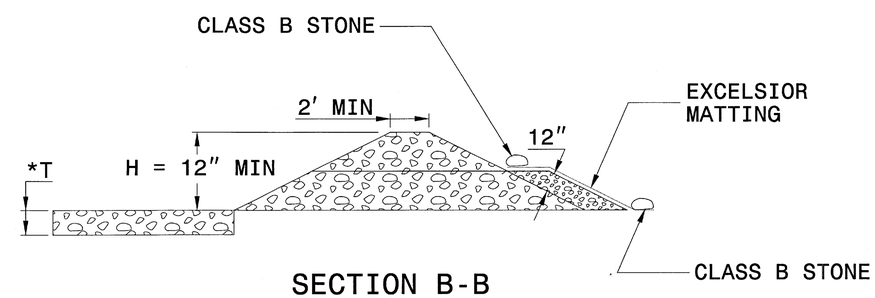

SECTION B-B

*T = 12" MIN., 18" MAX.

NOT TO SCALE

PROJECT REFERENCE NO.	SHEET NO.
BD-5108S	EC-2B
ROADSIDE ENVIRONMENTAL PROJECT ENGINEER	

DIVISION OF HIGHWAYS
STATE OF NORTH CAROLINA

SOIL STABILIZATION SUMMARY SHEET

MATTING FOR EROSION CONTROL

CONST SHEET NO.	LINE	FROM STATION	TO STATION	SIDE	ESTIMATE (SY)
				SUBTOTAL	
MISCELLANEOUS MATTING TO BE INSTALLED AS DIRECTED BY THE ENGINEER					
				TOTAL	
				SAY	

PERMANENT SOIL REINFORCEMENT MAT

CONST SHEET NO.	LINE	FROM STATION	TO STATION	SIDE	ESTIMATE (SY)
4	-L-	10+75	11+00	LT	20
				SUBTOTAL	20
		ADDITIONAL PSRM TO BE INSTALLED			0
				TOTAL	20
				SAY	20

PROJECT REFERENCE NO.	SHEET NO.
BD-5108S	EC-3
ROADWAY DESIGN ENGINEER	HYDRAULICS ENGINEER

DIVISION OF HIGHWAYS
STATE OF NORTH CAROLINA

SOIL STABILIZATION TIMEFRAMES

SITE DESCRIPTION	STABILIZATION TIME	TIMEFRAME EXCEPTIONS
PERIMETER DIKES, SWALES, DITCHES AND SLOPES	7 DAYS	NONE
HIGH QUALITY WATER (HQW) ZONES	7 DAYS	NONE
SLOPES STEEPER THAN 3:1	7 DAYS	IF SLOPES ARE 10' OR LESS IN LENGTH AND ARE NOT STEEPER THAN 2:1, 14 DAYS ARE ALLOWED.
SLOPES 3:1 OR FLATTER	14 DAYS	7 DAYS FOR SLOPES GREATER THAN 50' IN LENGTH.
ALL OTHER AREAS WITH SLOPES FLATTER THAN 4:1	14 DAYS	NONE, EXCEPT FOR PERIMETERS AND HQW ZONES.

GRAPHIC SCALE

50 0 50 100

PROJECT REFERENCE NO.	SHEET NO.
BD-5108S	EC-4/CONST.4
R/W SHEET NO.	
ROADSIDE ENVIRONMENTAL PROJECT ENGINEER	

LEVEL III CERTIFIED BY:
ALEXANDER SNIDER, E.I.
CERTIFICATION NUMBER: 3064
ISSUED: MAY 7, 2012

NC GRID
NAD 83/NSRS 2007

CLEARING AND GRUBBING
EROSION CONTROL FOR
CONSTRUCTION SHEET 4

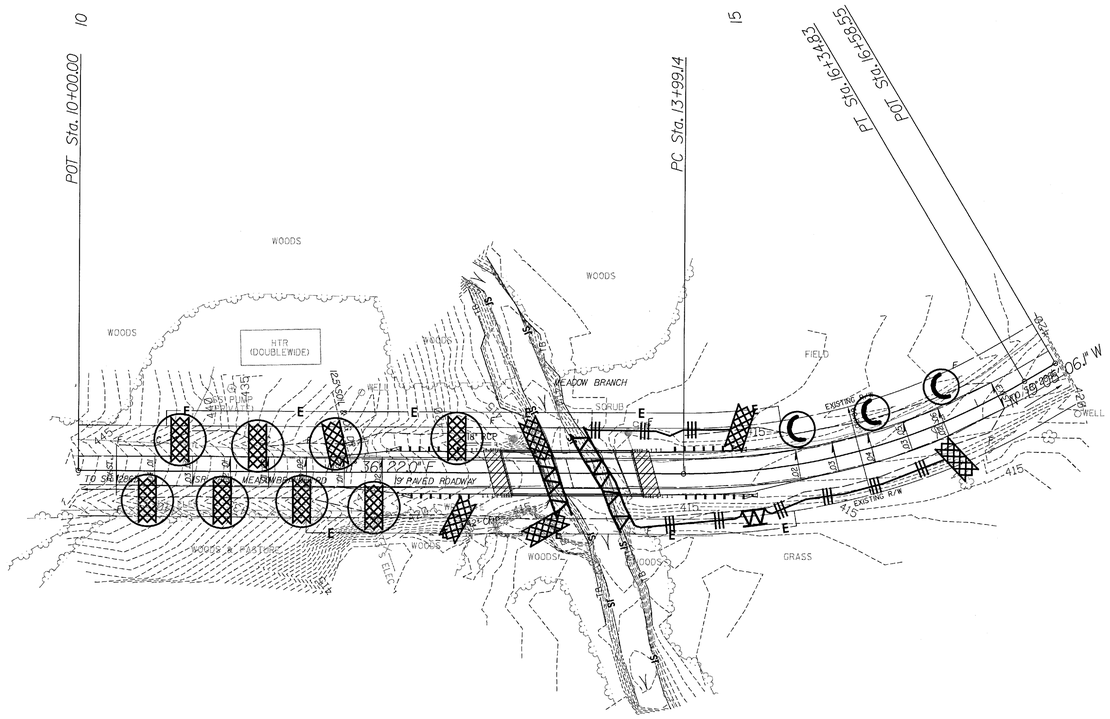

NOTE:
ALL EROSION CONTROL DEVICES SHOWN ARE LOCATED WITHIN EXISTING R/W OR EASEMENT.

Florence & Hutcheson
CONSULTING ENGINEERS
5121 Kingdom Way, Suite 100 Raleigh, NC 27607
NC License No: F-0258

5/7/2012
H:\Hydraulics\Erosion Control\cadd\bd5108S_hyd_erosion_c&g.dgn
F.&H. Associates, P.C.

PROJECT REFERENCE NO.	SHEET NO.
BD-5108S	EC-5/CONST.4
R/W SHEET NO.	___
ROADSIDE ENVIRONMENTAL PROJECT ENGINEER	

LEVEL III CERTIFIED BY:
ALEXANDER SNIDER, E.I.
CERTIFICATION NUMBER: 3064
ISSUED: MAY 7, 2012

FINAL EROSION CONTROL FOR CONSTRUCTION SHEET 4

GRAPHIC SCALE
50 0 50 100

NAD 83/NSRS 2007 NC GRID

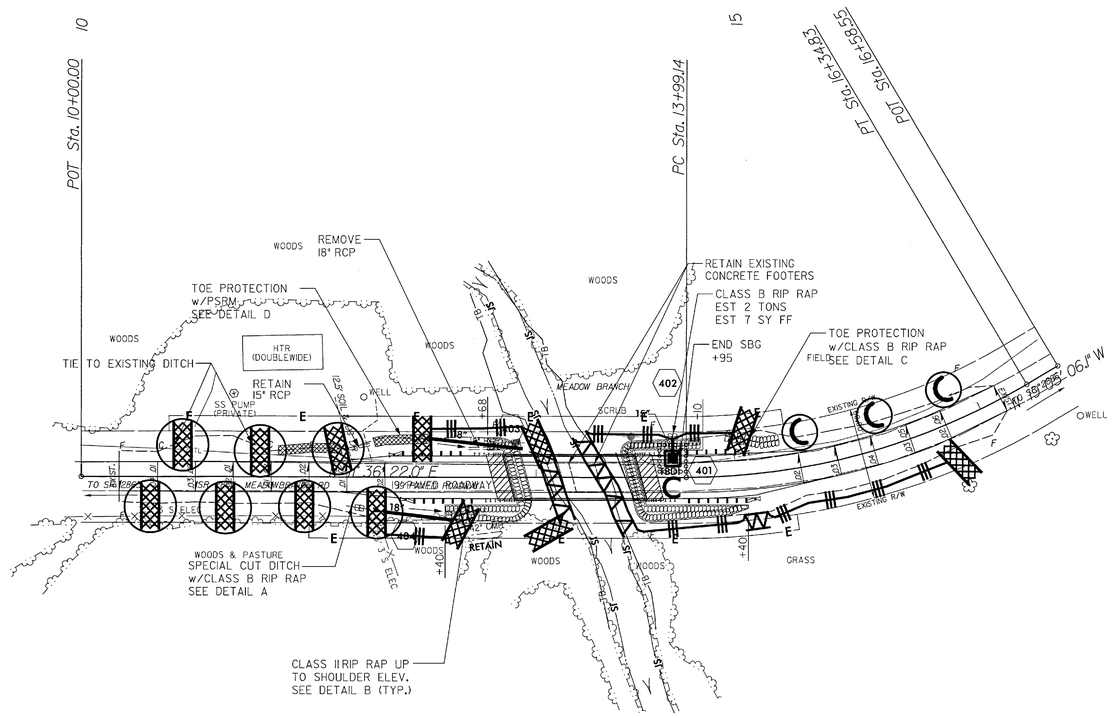

DETAIL A
SPECIAL CUT DITCH
(Not to Scale)

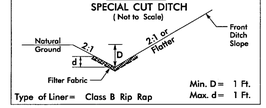

Type of Liner = Class B Rip Rap

STA. 11+75 TO STA. 12+00 RT

DETAIL B
CLASS II RIP RAP PROTECTION
(Not to Scale)

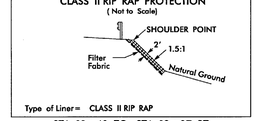

Type of Liner = CLASS II RIP RAP

STA. 12+40 TO STA. 12+87 RT
STA. 13+72 TO STA. 14+40 RT
STA. 13+64 TO STA. 14+10 LT

DETAIL C
TOE PROTECTION
(Not to Scale)

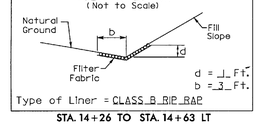

Type of Liner = CLASS B RIP RAP

STA. 14+26 TO STA. 14+63 LT

DETAIL D
TOE PROTECTION
(Not to Scale)

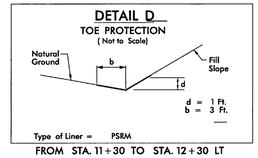

Type of Liner = PSRM

FROM STA. 11+30 TO STA. 12+30 LT

NOTE:
ALL EROSION CONTROL DEVICES SHOWN ARE LOCATED WITHIN EXISTING R/W OR EASEMENT.

Florence & Hutcheson
CONSULTING ENGINEERS
5121 Kingdom Way, Suite 100 Raleigh, NC 27607
NC License No: F-0258

5/7/2012
R:\Hydraulics\Erosion Control\add\bd5108S_hyd_erosion_final.dgn
Ko & Associates, P.C.

8/23/99

PROJ. REFERENCE NO.	SHEET NO.
BD-5108S	X-1

$$$$$$SYSTIME$$$$$
$$$$$$$$DGN$$$$$$$$$$$$$$$$$
$$$$USERNAME$$$$

PROJ. REFERENCE NO.	SHEET NO.
BD-5108S	X-2

PROJ. REFERENCE NO.	SHEET NO.
BD-5108S	X-3

8/23/99

0 2.5 5	PROJ. REFERENCE NO.	SHEET NO.
	BD-5108S	X-4

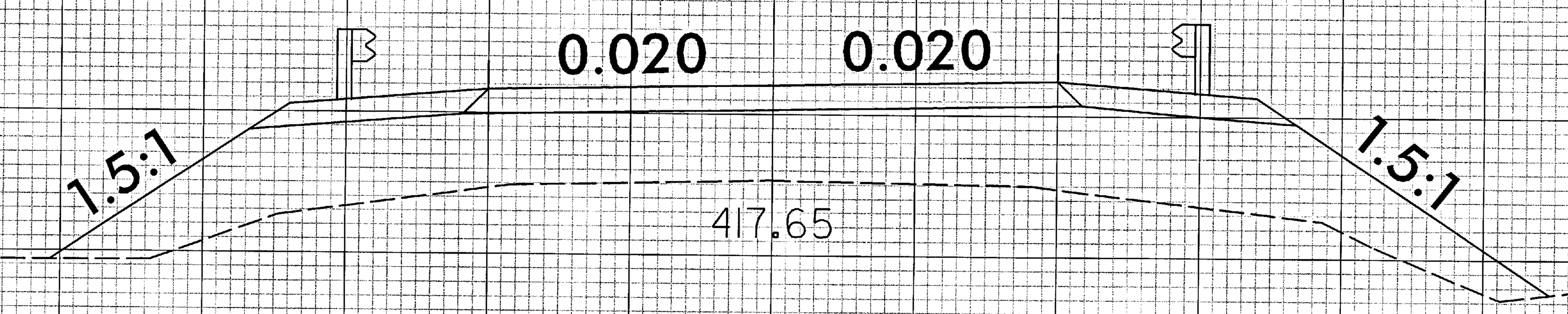

14 + 00.00

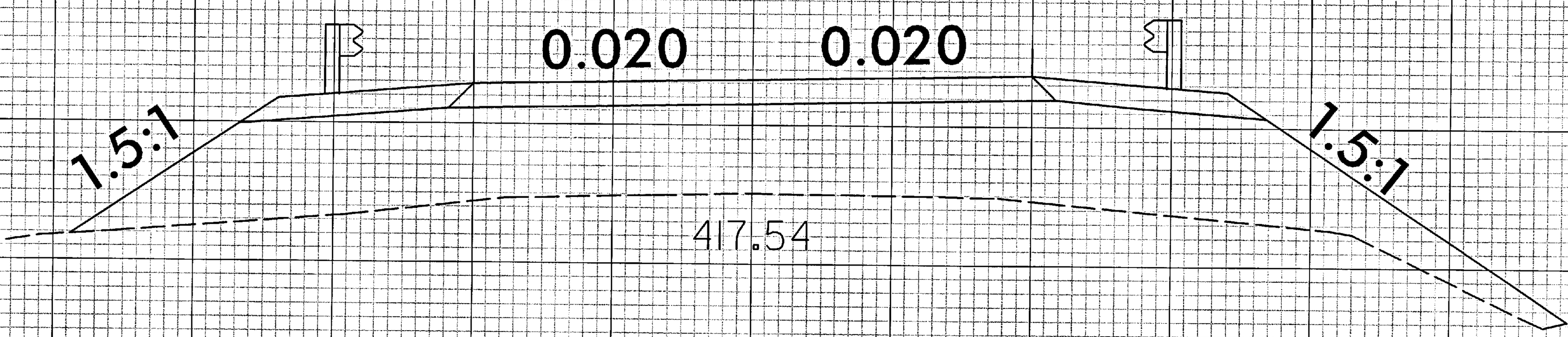

13 + 75.00

END BRIDGE STA. 13 + 69.16

BEGIN BRIDGE STA. 12 + 81.84

—L—

$$$$$$SYSTIME$$$$$
$$$$$$$$$$DGN$$$$$$$$$$$$$$$$$$
$$$$USERNAME$$$$

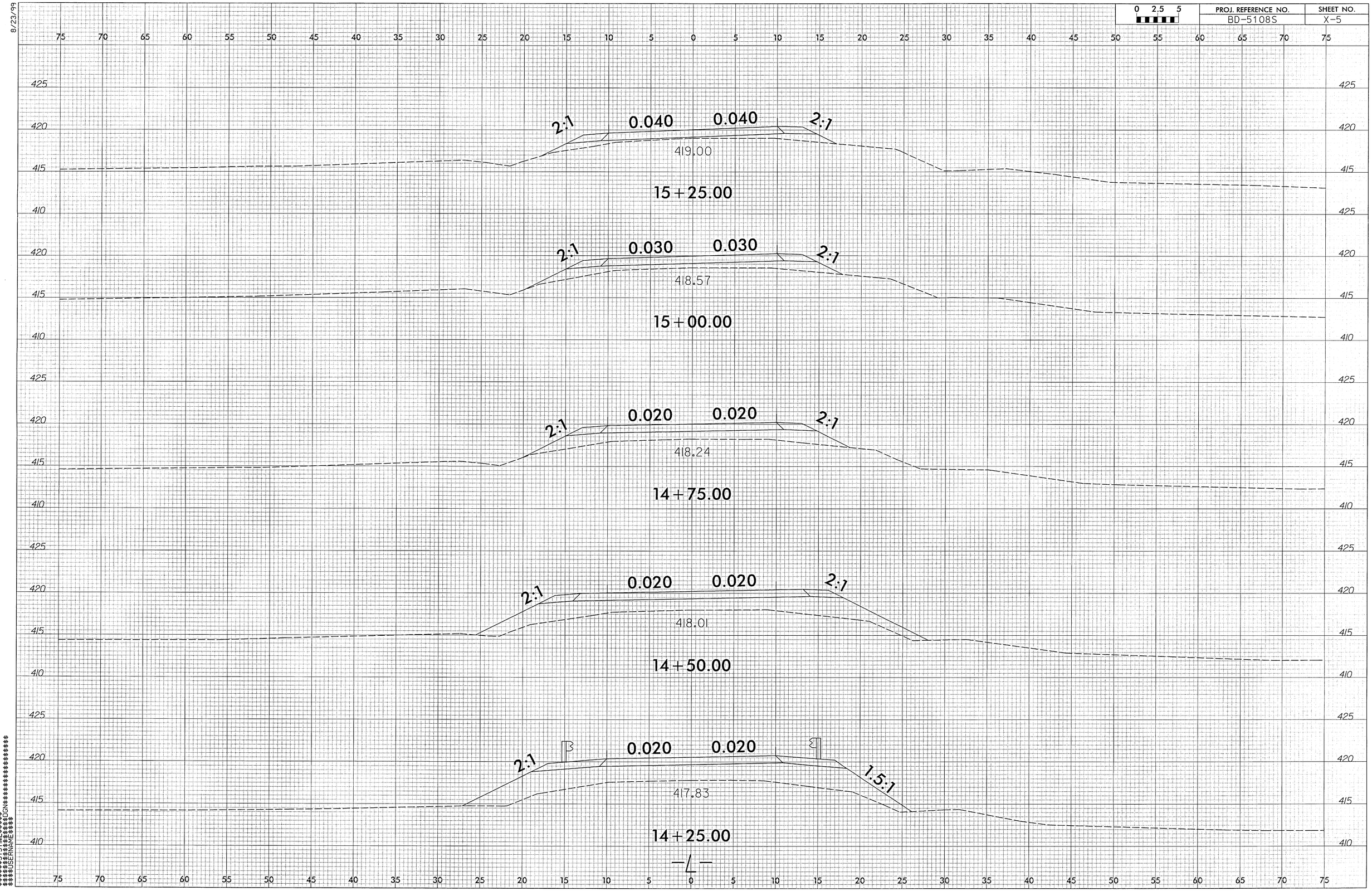

0 2.5 5
PROJ. REFERENCE NO.
BD-5108S
SHEET NO.
X-5
8/23/99
2:1
0.040
0.040
2:1
419.00
15+25.00
2:1
0.030
0.030
2:1
418.57
15+00.00
2:1
0.020
0.020
2:1
418.24
14+75.00
2:1
0.020
0.020
2:1
418.01
14+50.00
2:1
0.020
0.020
1.5:1
417.83
14+25.00
-L-

8/23/99

0 2.5 5	PROJ. REFERENCE NO.	SHEET NO.
	BD-5108S	X-6

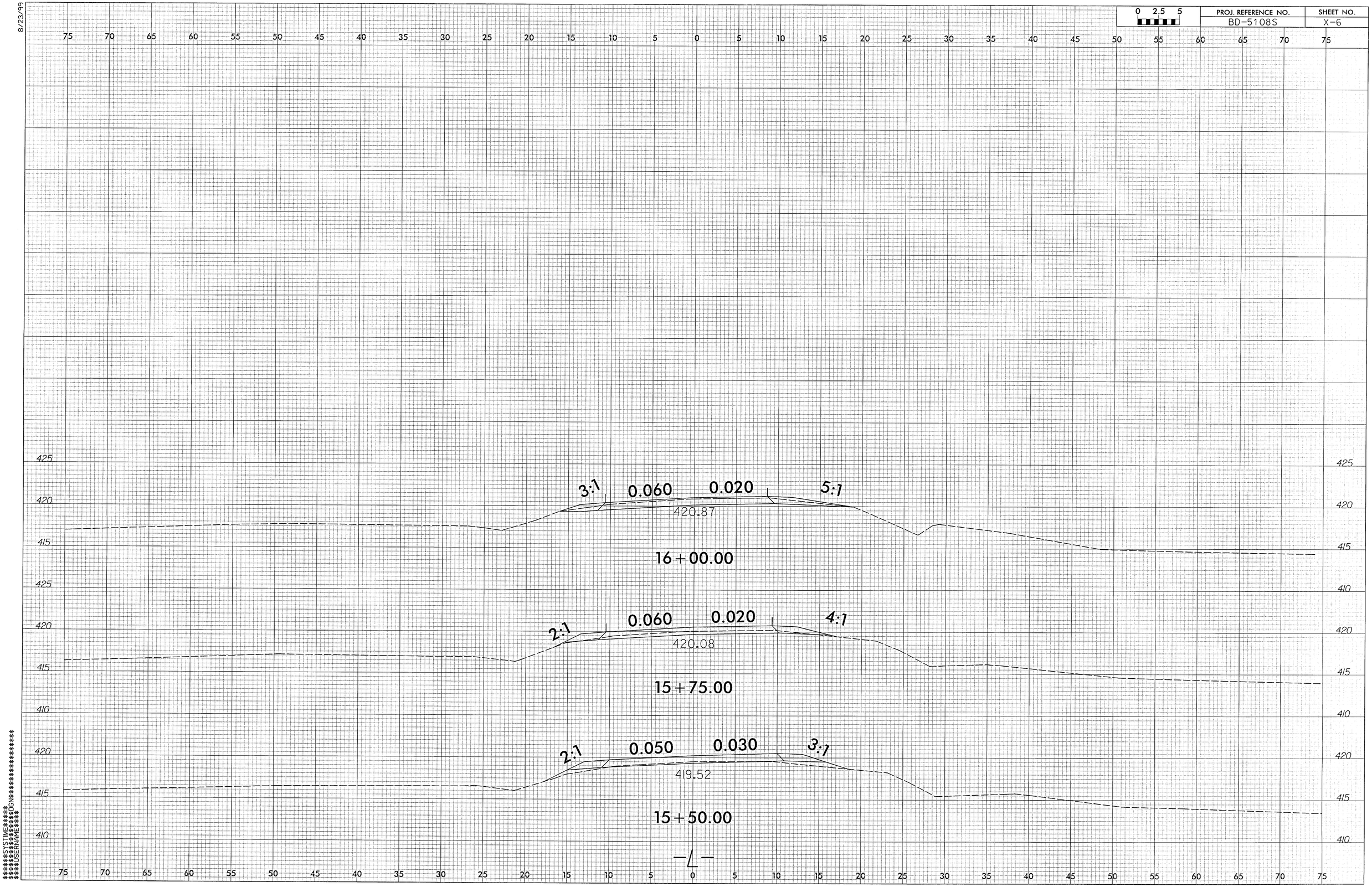

$$$$$$SYSTIME$$$$$$
$$$$$$TIME$$$$$$DGN$$$$$$$$$$$$$$$$$$$$
$$$$$$USERNAME$$$$$$

F.A. PROJECT NO.: BRZ-2869(1)

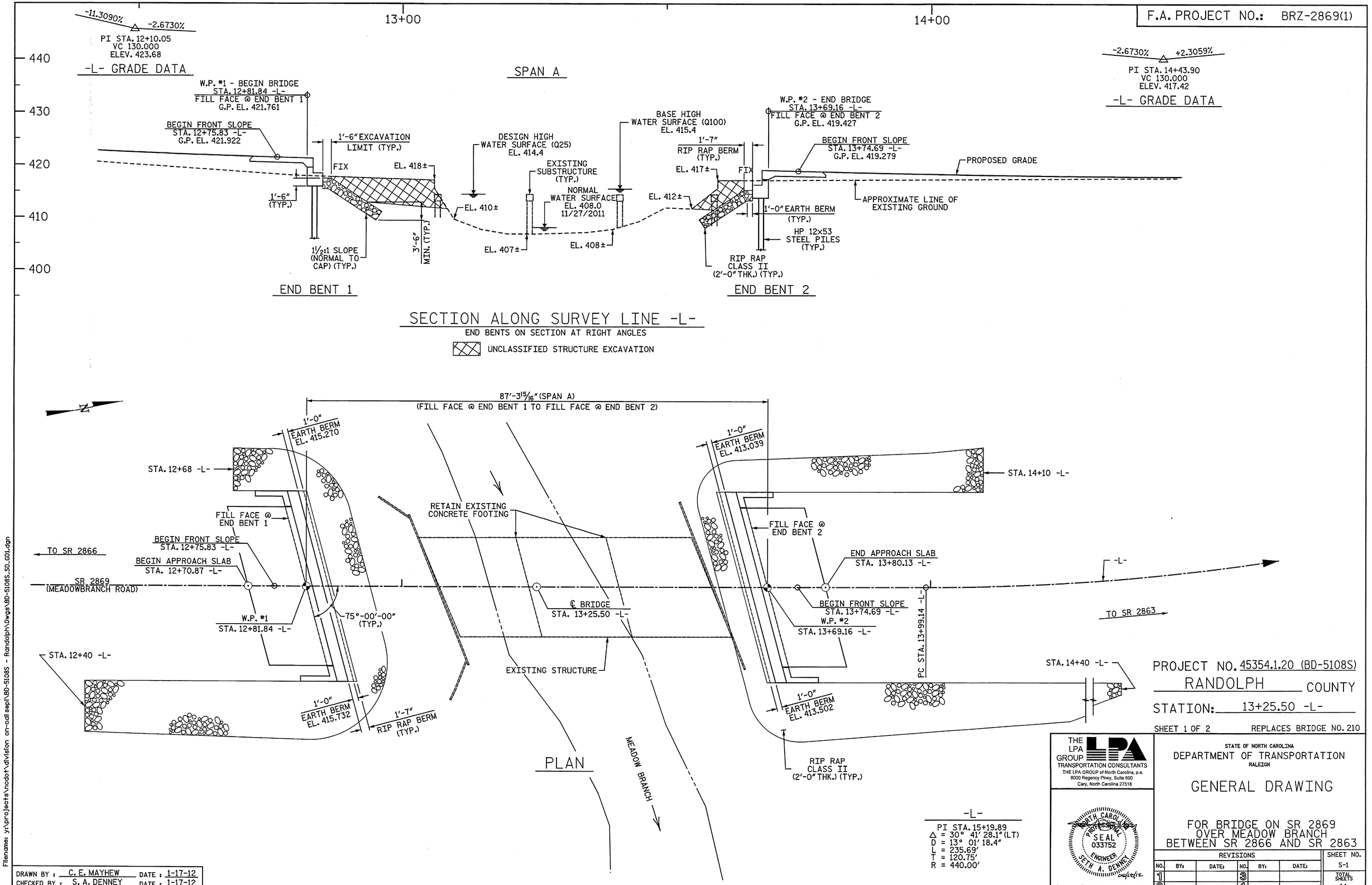

PROJECT NO. 45354.1.20 (BD-5108S)

RANDOLPH COUNTY

STATION: 13+25.50 -L-

SHEET 1 OF 2 REPLACES BRIDGE NO. 210

THE LPA GROUP
TRANSPORTATION CONSULTANTS
THE LPA GROUP of North Carolina, p.a.
8000 Regency Pkwy, Suite 600
Cary, North Carolina 27518

NORTH CAROLINA PROFESSIONAL SEAL 033752 ENGINEER SETH A. DENNEY
5/16/12
For George Douglas

STATE OF NORTH CAROLINA
DEPARTMENT OF TRANSPORTATION
RALEIGH

GENERAL DRAWING

FOR BRIDGE ON SR 2869
OVER MEADOW BRANCH
BETWEEN SR 2866 AND SR 2863

REVISIONS						SHEET NO.
NO.	BY:	DATE:	NO.	BY:	DATE:	S-1
1			3			TOTAL SHEETS
2			4			14

DRAWN BY : C. E. MAYHEW DATE : 1-17-12
CHECKED BY : S. A. DENNEY DATE : 1-17-12

jaustin
5/16/2012 12:34:58 PM
Filename: y:\projects\ncdot\division on-call sep\BD-5108S - Randolph\Dwgs\BD-5108S_SD_G01.dgn

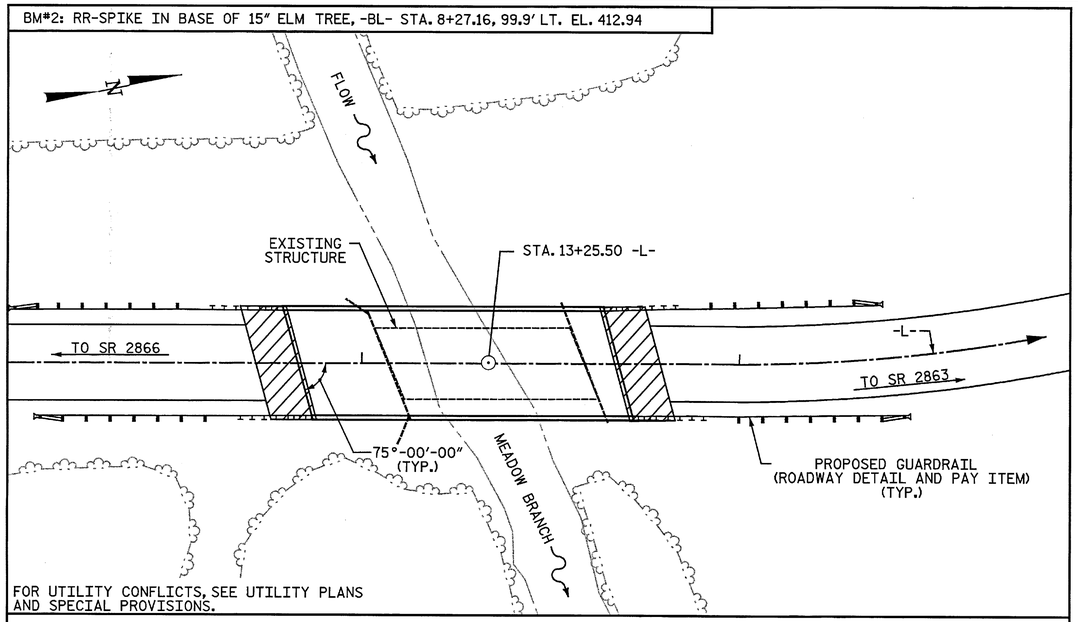

LOCATION SKETCH

HYDRAULIC DATA

DESIGN DISCHARGE	= 1400	CFS
FREQUENCY OF DESIGN FLOOD	= 25	YR
DESIGN HIGH WATER ELEVATION	= 414.4	
DRAINAGE AREA	= 4.6	SQ. MI.
BASE DISCHARGE (Q100)	= 1900	CFS
BASE HIGH WATER ELEVATION	= 415.4	

OVERTOPPING FLOOD DATA

OVERTOPPING DISCHARGE	= 3200	CFS
FREQUENCY OF OVERTOPPING FLOOD	= 100	YR +
OVERTOPPING FLOOD ELEVATION	= 418.2	

NOTES:

ASSUMED LIVE LOAD = HL-93 OR ALTERNATE LOADING

FOR OTHER DESIGN DATA AND GENERAL NOTES, SEE SHEET SN.

THIS BRIDGE HAS BEEN DESIGNED IN ACCORDANCE WITH THE AASHTO LRFD BRIDGE DESIGN SPECIFICATIONS.

THIS BRIDGE IS LOCATED IN SEISMIC ZONE 1.

FOR SUBMITTAL OF WORKING DRAWINGS, SEE SPECIAL PROVISIONS.

FOR FALSEWORK AND FORMWORK, SEE SPECIAL PROVISIONS.

FOR GROUT FOR STRUCTURES, SEE SPECIAL PROVISIONS.

FOR CRANE SAFETY, SEE SPECIAL PROVISIONS.

REMOVAL OF THE EXISTING BRIDGE SHALL BE PERFORMED SO AS NOT TO ALLOW DEBRIS TO FALL INTO THE WATER. THE CONTRACTOR SHALL REMOVE THE BRIDGE AND SUBMIT PLANS FOR DEMOLITION IN ACCORDANCE WITH ARTICLE 402-2 OF THE STANDARD SPECIFICATIONS.

THE MATERIAL SHOWN ON SHEET 1 OF 2 IN THE CROSS-HATCHED AREA SHALL BE EXCAVATED FOR A DISTANCE OF 20FT. EACH SIDE OF CENTERLINE ROADWAY AS DIRECTED BY THE ENGINEER. THIS WORK WILL BE PAID FOR AT THE CONTRACT LUMP SUM PRICE FOR UNCLASSIFIED STRUCTURE EXCAVATION. SEE SECTION 412 OF THE STANDARD SPECIFICATIONS.

THE SUBSTRUCTURE OF THE EXISTING BRIDGE INDICATED ON THE PLANS IS FROM THE BEST INFORMATION AVAILABLE. SINCE THIS INFORMATION IS SHOWN FOR THE CONVENIENCE OF THE CONTRACTOR, THE CONTRACTOR SHALL HAVE NO CLAIM WHATSOEVER AGAINST THE DEPARTMENT OF TRANSPORTATION FOR ANY DELAYS OR ADDITIONAL COST INCURRED BASED ON DIFFERENCES BETWEEN THE EXISTING BRIDGE SUBSTRUCTURE SHOWN ON THE PLANS AND THE ACTUAL CONDITIONS AT THE PROJECT SITE.

THE EXISTING STRUCTURE CONSISTING OF 1 SPAN @ 18'-3", 1 SPAN @ 16'-7", AND 1 SPAN @ 17'-9" WITH A TIMBER DECK ON TIMBER JOISTS AND A CLEAR ROADWAY OF 19.2' ON TIMBER CAPS AND PILES AND LOCATED AT THE PROPOSED SITE SHALL BE REMOVED. EXISTING CONCRETE FOOTING AT EXISTING INTERIOR BENT 1 AND EXISTING INTERIOR BENT 2 SHALL REMAIN IN PLACE.

FOR EROSION CONTROL MEASURES, SEE EROSION CONTROL PLANS.

ASPHALT WEARING SURFACE IS INCLUDED IN ROADWAY QUANTITY ON ROADWAY PLANS.

THIS STRUCTURE HAS BEEN DESIGNED IN ACCORDANCE WITH HEC 18, "EVALUATING SCOUR AT BRIDGES", MAY, 2001.

THE CONTRACTOR SHALL PROVIDE INDEPENDENT ASSURANCE SAMPLES OF REINFORCING STEEL AS FOLLOWS: FOR PROJECTS REQUIRING UP TO 400 TONS OF REINFORCING STEEL, ONE 30 INCH SAMPLE OF EACH SIZE BAR USED, AND FOR PROJECTS REQUIRING OVER 400 TONS OF REINFORCING STEEL, TWO 30 INCH SAMPLES OF EACH SIZE BAR USED. THE BARS FROM WHICH THE SAMPLES ARE TAKEN MUST THEN BE SPLICED WITH REPLACEMENT BARS OF THE SIZE AND LENGTH OF THE SAMPLE, PLUS A MINIMUM LAP SPLICE OF THIRTY BAR DIAMETERS. PAYMENT FOR THE SAMPLES OF REINFORCING STEEL SHALL BE CONSIDERED INCIDENTAL TO VARIOUS PAY ITEMS.

FOUNDATION NOTES:

FOR PILES, SEE SECTION 450 OF THE STANDARD SPECIFICATIONS.

PILES AT END BENT NO. 1 AND END BENT NO. 2 ARE DESIGNED FOR A FACTORED RESISTANCE OF 125 TONS PER PILE.

DRIVE PILES AT END BENT NO. 1 AND END BENT NO. 2 TO A REQUIRED DRIVING RESISTANCE OF 210 TONS PER PILE.

STEEL H-PILE POINTS ARE REQUIRED FOR STEEL H-PILES AT END BENT NO. 1 AND END BENT NO. 2 FOR STEEL PILE POINTS, SEE SECTION 450 OF THE STANDARD SPECIFICATIONS.

TOTAL BILL OF MATERIAL

	REMOVAL OF EXISTING STRUCTURE	UNCLASSIFIED STRUCTURE EXCAVATION	CLASS A CONCRETE	BRIDGE APPROACH SLABS	REINFORCING STEEL	HP 12 X 53 STEEL PILES		STEEL PILE POINTS	VERTICAL CONCRETE BARRIER RAIL	RIP RAP CLASS II (2'-0" THICK)	GEOTEXTILE FOR DRAINAGE	ELASTOMERIC BEARINGS	3'-0" x 2'-9" PRESTRESSED CONCRETE BOX BEAMS	
	LUMP SUM	LUMP SUM	CU. YDS.	LUMP SUM	LBS.	NO.	LIN. FT.	EA	LIN. FT.	TONS	SY	LUMP SUM	NO.	LIN. FT.
SUPERSTRUCTURE				LUMP SUM					170			LUMP SUM	10	850
END BENT 1			17.1		2,881	5	50	5		134	149			
END BENT 2			17.1		2,881	5	50	5		161	178			
TOTAL	LUMP SUM	LUMP SUM	34.2	LUMP SUM	5,762	10	100	10	170	295	327	LUMP SUM	10	850

DRAWN BY : C. E. MAYHEW DATE : 1-17-12
CHECKED BY : S. A. DENNEY DATE : 1-17-12

PROJECT NO. 45354.1.20 (BD-5108S)
RANDOLPH COUNTY
STATION: 13+25.50 -L-

SHEET 2 OF 2

THE LPA GROUP
TRANSPORTATION CONSULTANTS
THE LPA GROUP of North Carolina, p.a.
8000 Regency Pkwy, Suite 600
Cary, North Carolina 27518

NORTH CAROLINA PROFESSIONAL SEAL 033752 ENGINEER SETH A. DENNEY
05/08/12
FOR GENERAL DRAWING ONLY

STATE OF NORTH CAROLINA
DEPARTMENT OF TRANSPORTATION
RALEIGH

GENERAL DRAWING

FOR BRIDGE ON SR 2869
OVER MEADOW BRANCH
BETWEEN SR 2866 AND SR 2863

REVISIONS						SHEET NO.
NO.	BY:	DATE:	NO.	BY:	DATE:	S-2
1			3			TOTAL SHEETS
2			4			14

Jaustin
5/16/2012 12:35:01 PM
Filename: y:\projects\ncdot\division on-call\sep\BD-5108S - Randolph\Dwgs\BD-5108S_SD_G02.dgn

LOAD AND RESISTANCE FACTOR RATING (LRFD) SUMMARY FOR PRESTRESSED CONCRETE GIRDERS

LEVEL		VEHICLE	WEIGHT (W) (TONS)	CONTROLLING LOAD RATING	MINIMUM RATING FACTORS (RF)	TONS = W X RF	STRENGTH I LIMIT STATE											SERVICE III LIMIT STATE						COMMENT NUMBER
								MOMENT					SHEAR						MOMENT					
							LIVELOAD FACTORS	DISTRIBUTION FACTORS (DF)	RATING FACTOR	SPAN	GIRDER LOCATION	DISTANCE FROM LEFT END OF SPAN (ft)	DISTRIBUTION FACTORS (DF)	RATING FACTOR	SPAN	GIRDER LOCATION	DISTANCE FROM LEFT END OF SPAN (ft)	LIVELOAD FACTORS	DISTRIBUTION FACTORS (DF)	RATING FACTOR	SPAN	GIRDER LOCATION	DISTANCE FROM LEFT END OF SPAN (ft)	
DESIGN LOAD RATING		HL-93(Inv)	N/A	**1**	1.234	--	1.75	0.268	1.77	A	EL	41.724	0.584	**1.23**	A	EL	**8.345**	0.80	0.268	1.43	A	EL	41.724	
		HL-93(Opr)	N/A	--	1.6	--	1.35	0.268	2.29	A	EL	41.724	0.584	1.6	A	EL	8.345	N/A	--	--	--	--	--	
		HS-20(Inv)	36.000	**2**	1.6	57.589	1.75	0.268	2.38	A	EL	41.724	0.584	**1.6**	A	EL	**8.345**	0.80	0.268	1.92	A	EL	41.724	
		HS-20(Opr)	36.000	--	2.074	74.652	1.35	0.268	3.08	A	EL	41.724	0.584	2.07	A	EL	8.345	N/A	--	--	--	--	--	
LEGAL LOAD RATING	SV	SNSH	13.500	--	4.442	59.964	1.4	0.268	6.87	A	EL	41.724	0.584	4.84	A	EL	8.345	0.80	0.268	4.44	A	EL	41.724	
		SNGARBS2	20.000	--	3.264	65.272	1.4	0.268	5.05	A	EL	41.724	0.584	3.41	A	EL	8.345	0.80	0.268	3.26	A	EL	41.724	
		SNAGRIS2	22.000	--	3.072	67.575	1.4	0.268	4.75	A	EL	41.724	0.584	3.16	A	EL	8.345	0.80	0.268	3.07	A	EL	41.724	
		SNCOTTS3	27.250	--	2.209	60.195	1.4	0.268	3.42	A	EL	41.724	0.584	2.41	A	EL	8.345	0.80	0.268	2.21	A	EL	41.724	
		SNAGGRS4	34.925	--	1.828	63.848	1.4	0.268	2.83	A	EL	41.724	0.584	1.98	A	EL	8.345	0.80	0.268	1.83	A	EL	41.724	
		SNS5A	35.550	--	1.789	63.597	1.4	0.268	2.77	A	EL	41.724	0.584	2	A	EL	8.345	0.80	0.268	1.79	A	EL	41.724	
		SNS6A	39.950	--	1.634	65.278	1.4	0.268	2.53	A	EL	41.724	0.584	1.82	A	EL	8.345	0.80	0.268	1.63	A	EL	41.724	
		SNS7B	42.000	--	1.556	65.343	1.4	0.268	2.41	A	EL	41.724	0.584	1.78	A	EL	8.345	0.80	0.268	1.56	A	EL	41.724	
	TTST	TNAGRIT3	33.000	--	1.99	65.683	1.4	0.268	3.08	A	EL	41.724	0.584	2.17	A	EL	8.345	0.80	0.268	1.99	A	EL	41.724	
		TNT4A	33.075	--	1.997	66.056	1.4	0.268	3.09	A	EL	41.724	0.584	2.12	A	EL	8.345	0.80	0.268	2.00	A	EL	41.724	
		TNT6A	41.600	--	1.626	67.64	1.4	0.268	2.51	A	EL	41.724	0.584	1.88	A	EL	8.345	0.80	0.268	1.63	A	EL	41.724	
		TNT7A	42.000	--	1.63	68.476	1.4	0.268	2.52	A	EL	41.724	0.584	1.84	A	EL	8.345	0.80	0.268	1.63	A	EL	41.724	
		TNT7B	42.000	--	1.678	70.459	1.4	0.268	2.59	A	EL	41.724	0.584	1.74	A	EL	8.345	0.80	0.268	1.68	A	EL	41.724	
		TNAGRIT4	43.000	--	1.603	68.913	1.4	0.268	2.48	A	EL	41.724	0.584	1.69	A	EL	8.345	0.80	0.268	1.60	A	EL	41.724	
		TNAGT5A	45.000	--	1.514	68.142	1.4	0.268	2.34	A	EL	41.724	0.584	1.67	A	EL	8.345	0.80	0.268	1.51	A	EL	41.724	
		TNAGT5B	45.000	**3**	1.499	67.445	1.4	0.268	2.32	A	EL	41.724	0.584	1.61	A	EL	8.345	0.80	0.268	**1.50**	A	EL	**41.724**	

LOAD FACTORS:

DESIGN LOAD RATING FACTORS	LIMIT STATE	γ_{DC}	γ_{DW}
	STRENGTH I	1.25	1.50
	SERVICE III	1.00	1.00

NOTES:

MINIMUM RATING FACTORS ARE BASED ON THE STRENGTH I AND SERVICE III LIMIT STATES.

ALLOWABLE STRESSES FOR SERVICE III LIMIT STATE ARE AS REQUIRED FOR DESIGN.

COMMENTS:

1.
2.
3.
4.

CONTROLLING LOAD RATING

1. DESIGN LOAD RATING (HL-93)
2. DESIGN LOAD RATING (HS-20)
3. LEGAL LOAD RATING **

** SEE CHART FOR VEHICLE TYPE

GIRDER LOCATION

I - INTERIOR GIRDER
EL - EXTERIOR LEFT GIRDER
ER - EXTERIOR RIGHT GIRDER

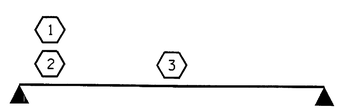

LRFR SUMMARY

NORTH CAROLINA PROFESSIONAL SEAL 21545 ENGINEER STEVEN L. WANCE

04/11/12

PROJECT NO. BD-5108S
RANDOLPH COUNTY
STATION: 13+25.50 -L-

STATE OF NORTH CAROLINA
DEPARTMENT OF TRANSPORTATION
RALEIGH

STANDARD
LRFR SUMMARY FOR 85' BOX BEAM UNIT 75° SKEW & 105° SKEW
(NON-INTERSTATE TRAFFIC)

REVISIONS						SHEET NO.
NO.	BY:	DATE:	NO.	BY:	DATE:	S-3
1			3			TOTAL SHEETS
2			4			14

ASSEMBLED BY : S. WANCE PE DATE : 02/12
CHECKED BY : T. H. FANG DATE : 03/12
DRAWN BY : TMG 11/11
CHECKED BY : AAC 11/11

11-APR-2012 12:22
S:\DPG2\Tlng\DIV8BD-Projects\BD-5108S\FinalPlans\BD5108S_SD_FINALPLANS.dgn
swance

STD. NO. 33LRFR1_75&105S_85L

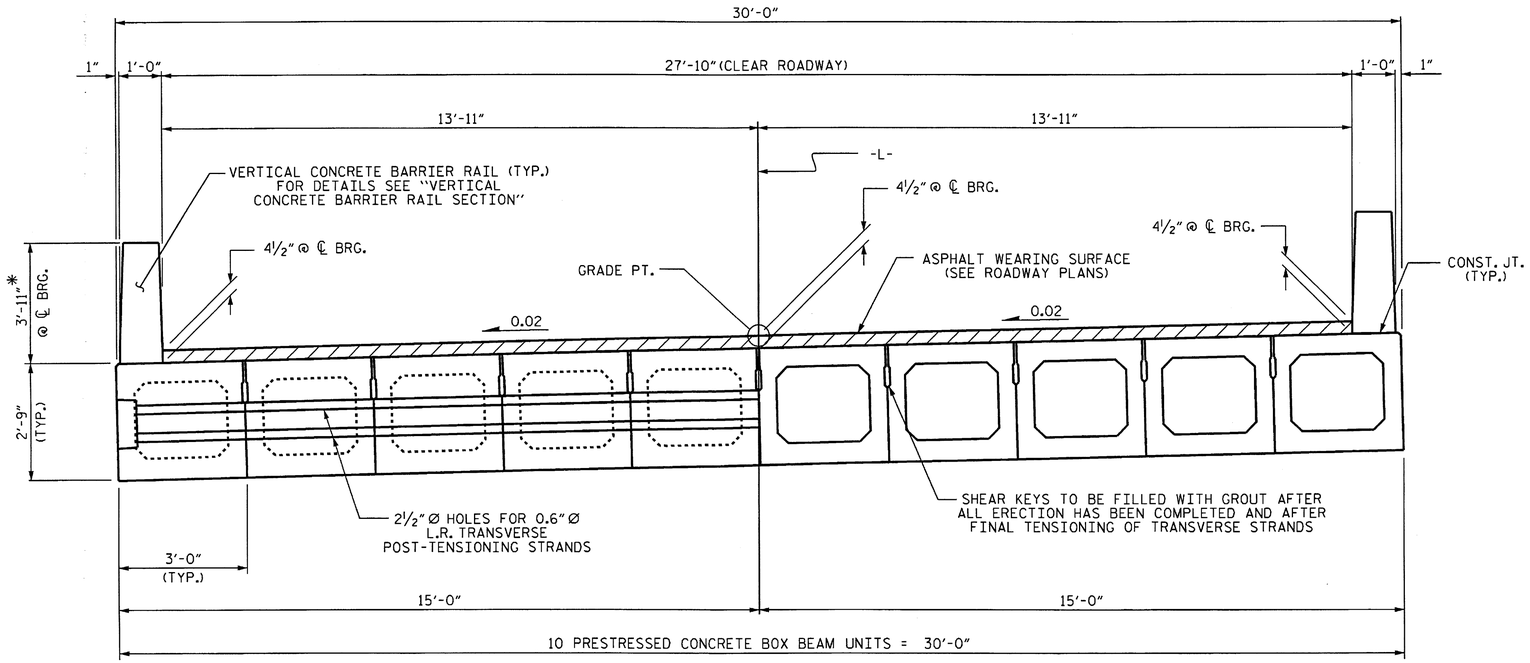

HALF SECTION
AT INTERMEDIATE DIAPHRAGMS

HALF SECTION
THROUGH VOIDS

TYPICAL SECTION

*THE MAXIMUM BARRIER RAIL HEIGHT AND ASPHALT THICKNESS IS SHOWN. THE HEIGHT OF THE BARRIER RAIL AND ASPHALT THICKNESS VARIES WHILE THE TOP OF THE BARRIER RAIL FOLLOWS THE PROFILE OF THE GUTTERLINE. FOR RAIL HEIGHT DETAILS AND ASPHALT THICKNESS, SEE THE "VERTICAL CONCRETE BARRIER RAIL SECTION" DETAIL.

FIXED END

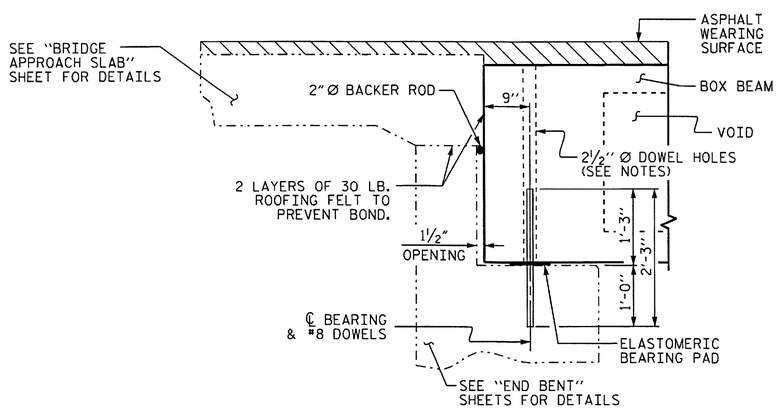

SECTION AT END BENT

NOTES

ALL PRESTRESSING STRANDS SHALL BE 7-WIRE LOW RELAXATION GRADE 270 STRANDS AND SHALL CONFORM TO AASHTO M203 EXCEPT FOR SAMPLING REQUIREMENTS WHICH SHALL BE IN ACCORDANCE WITH THE STANDARD SPECIFICATIONS.

ALL REINFORCING STEEL CAST WITH THE BOX BEAM SECTIONS SHALL BE GRADE 60 AND SHALL BE INCLUDED IN THE UNIT PRICE BID FOR PRESTRESSED CONCRETE BOX BEAMS.

RECESSES FOR TRANSVERSE STRANDS SHALL BE GROUTED AFTER THE TENSIONING OF THE STRANDS.

THE 2½" Ø DOWEL HOLES AT FIXED ENDS OF BOX BEAM SECTIONS SHALL BE FILLED WITH NON-SHRINK GROUT.

THE 2" Ø BACKER ROD SHALL CONFORM TO THE REQUIREMENTS OF TYPE M BOND BREAKER. SEE SECTION 1028 OF THE STANDARD SPECIFICATIONS.

THE TRANSFER OF LOAD FROM THE ANCHORAGES TO THE BOX BEAM UNIT SHALL BE DONE WHEN THE CONCRETE HAS REACHED A COMPRESSIVE STRENGTH OF NOT LESS THAN 6000 PSI.

ALL REINFORCING STEEL IN VERTICAL CONCRETE BARRIER RAILS SHALL BE EPOXY COATED.

PRESTRESSING STRANDS SHALL BE CUT FLUSH WITH THE BOX BEAM UNIT ENDS.

APPLY EPOXY PROTECTIVE COATING TO BOX BEAM UNIT ENDS.

VERTICAL GROOVED CONTRACTION JOINTS, ½" IN DEPTH, SHALL BE TOOLED IN ALL EXPOSED FACES OF THE BARRIER RAIL AND IN ACCORDANCE WITH ARTICLE 825-10(B) OF THE STANDARD SPECIFICATIONS. A VERTICAL CONTRACTION JOINT SHALL BE LOCATED AT EACH THIRD POINT BETWEEN BARRIER RAIL EXPANSION JOINTS. ONLY ONE CONTRACTION JOINT IS REQUIRED AT MIDPOINT OF BARRIER RAIL SEGMENTS LESS THAN 20 FEET IN LENGTH AND NO CONTRACTION JOINTS ARE REQUIRED FOR THOSE SEGMENTS LESS THAN 10 FEET IN LENGTH.

THE LOCATION OF THE VOID DRAINS MAY BE SHIFTED SLIGHTLY WHERE NECESSARY TO CLEAR PRESTRESSING STRANDS OR TRANSVERSE REINFORCING STEEL.

FOR GROUT FOR STRUCTURES, SEE SPECIAL PROVISIONS.

NORTH CAROLINA PROFESSIONAL SEAL 21545 ENGINEER STEVEN L. WANCE

04/11/12

PROJECT NO. BD-5108S
RANDOLPH COUNTY
STATION: 13+25.50 -L-

SHEET 1 OF 5

STATE OF NORTH CAROLINA
DEPARTMENT OF TRANSPORTATION
RALEIGH

STANDARD

3'-0" X 2'-9"
PRESTRESSED CONCRETE
BOX BEAM UNIT

REVISIONS						SHEET NO.
NO.	BY:	DATE:	NO.	BY:	DATE:	S-4
1			3			TOTAL SHEETS
2			4			14

STD. NO. STD.33PCBB1_30

ASSEMBLED BY : S. WANCE PE	DATE : 02/12
CHECKED BY : T. H. FANG	DATE : 03/12
DRAWN BY : DGE 8/11	
CHECKED BY : TMG 11/11	

11-APR-2012 12:22
S:\DPG2\Ting\DIV8BD-Projects\BD-5108S\FinalPlans\BD5108S_SD_FINALPLANS.dgn
swance

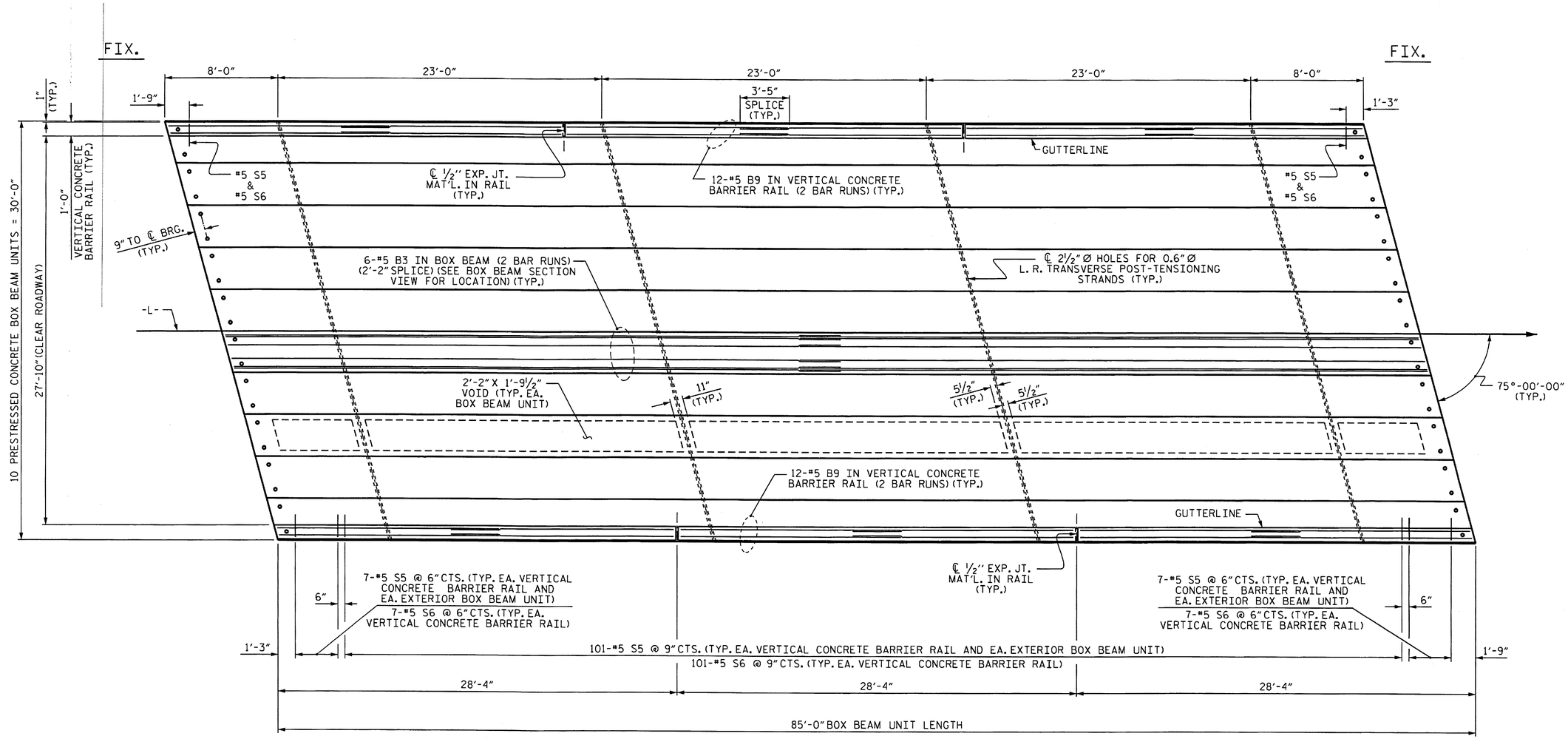

PLAN OF UNIT

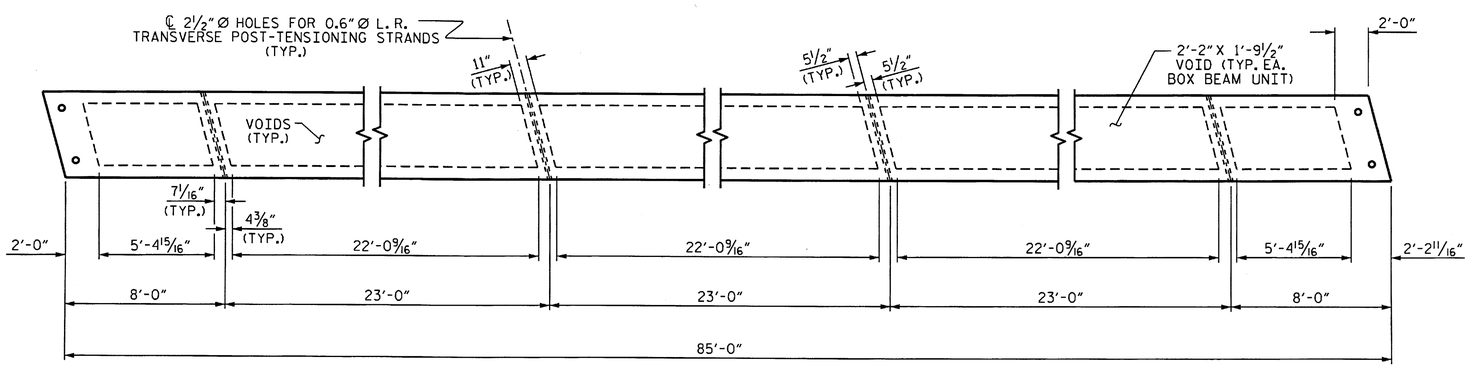

DIAPHRAGM AND VOID LAYOUT

PROJECT NO. BD-5108S
RANDOLPH COUNTY
STATION: 13+25.50 -L-

SHEET 2 OF 5

NORTH CAROLINA PROFESSIONAL SEAL 21545 ENGINEER STEVEN L. WANCE
04/11/12

STATE OF NORTH CAROLINA
DEPARTMENT OF TRANSPORTATION
RALEIGH

PLAN OF 85' UNIT
27'-10" CLEAR ROADWAY
75° SKEW

REVISIONS						SHEET NO.
NO.	BY:	DATE:	NO.	BY:	DATE:	S-5
1			3			TOTAL SHEETS
2			4			14

ASSEMBLED BY :	S. WANCE PE	DATE :	02/12
CHECKED BY :	T. H. FANG	DATE :	03/12
DRAWN BY :	DGE 8/11		
CHECKED BY :	TMG 11/11		

11-APR-2012 12:22
S:\DPG2\Tlng\DIV8BD-Projects\BD-5108S\Final Plans\BD5108S_SD_FINALPLANS.dgn
swance

STD.NO.33PCBB_30_75S_85L

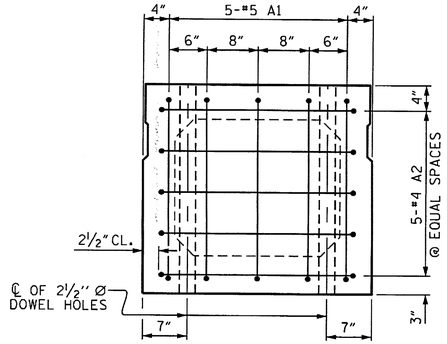

END ELEVATION

SHOWING PLACEMENT OF #5 & #4 "A" BARS AND LOCATION OF DOWEL HOLES. (INTERIOR BOX BEAM SECTION SHOWN-EXTERIOR SECTION SIMILAR EXCEPT SHEAR KEY LOCATION. STRAND LAYOUT NOT SHOWN.)

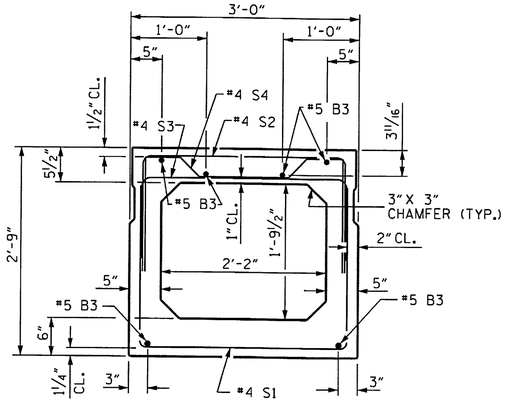

INTERIOR BOX BEAM SECTION

(STRAND LAYOUT NOT SHOWN)

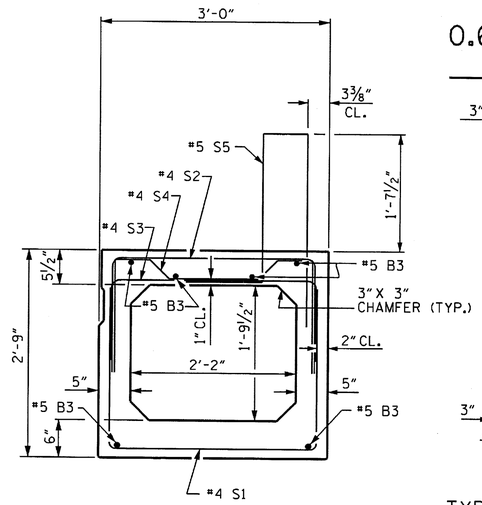

EXTERIOR BOX BEAM SECTION

(STRAND LAYOUT NOT SHOWN)

0.6" Ø LOW RELAXATION STRAND LAYOUT

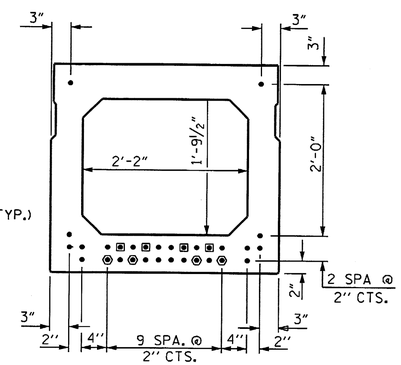

TYPICAL STRAND LOCATION

(30 STRANDS REQUIRED)

DEBONDING LEGEND

- ● FULLY BONDED STRANDS
- ◉ STRANDS DEBONDED FOR 4'-0" FROM END OF GIRDER
- ⬢ STRANDS DEBONDED FOR 12'-0" FROM END OF GIRDER

BOND SHALL BE BROKEN ON STRANDS AS SHOWN FOR THE SPECIFIED LENGTH FROM EACH END OF THE BOX BEAM. SEE STANDARD SPECIFICATIONS ARTICLE 1078-7.

GRADE 270 STRANDS	0.6" Ø L.R.
AREA (SQUARE INCHES)	0.217
ULTIMATE STRENGTH (LBS. PER STRAND)	58,600
APPLIED PRESTRESS (LBS. PER STRAND)	43,950

BAR TYPES

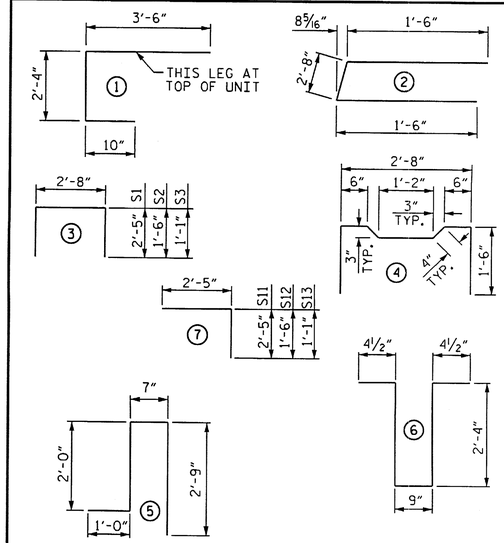

ALL BAR DIMENSIONS ARE OUT TO OUT

BILL OF MATERIAL FOR ONE BOX BEAM SECTION

BAR	NUMBER	SIZE	TYPE	EXTERIOR UNIT LENGTH	EXTERIOR UNIT WEIGHT	INTERIOR UNIT LENGTH	INTERIOR UNIT WEIGHT
A1	10	#5	1	6'-8"	70	6'-8"	70
A2	34	#4	2	5'-8"	129	5'-8"	129
B3	12	#5	STR	43'-5"	543	43'-5"	543
K1	12	#4	6	6'-2"	49	6'-2"	49
K2	8	#4	STR	2'-7"	14	2'-7"	14
S1	67	#4	3	7'-6"	336	7'-6"	336
S2	67	#4	3	5'-8"	254	5'-8"	254
S3	117	#4	3	4'-10"	378	4'-10"	378
S4	50	#4	4	5'-10"	195	5'-10"	195
S11	12	#4	7	4'-10"	39	4'-10"	39
S12	12	#4	7	3'-11"	31	3'-11"	31
S13	12	#4	7	3'-6"	28	3'-6"	28
* S5	115	#5	5	6'-4"	760	--	--
REINFORCING STEEL				2066	LBS.	2066	LBS.
* EPOXY COATED REINF. STEEL				760	LBS.		
8000 P.S.I. CONCRETE				15.1	CU. YDS.	15.0	CU. YDS.
0.6" Ø L.R. STRANDS				No. 30		No. 30	

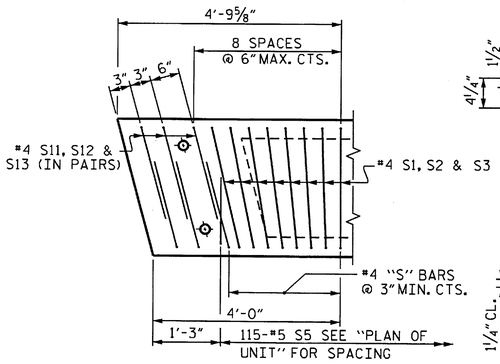

DETAIL "B"

EXTERIOR UNIT SHOWN, INTERIOR UNIT SIMILAR EXCEPT OMIT #5 S5 BARS. "B" BARS AND "A" BARS NOT SHOWN.

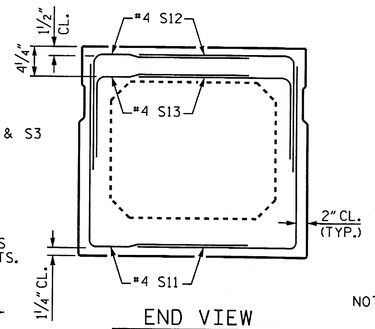

END VIEW

(SHOWING #4 "S" BARS IN END OF BEAM)

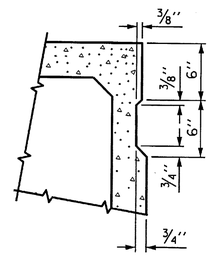

SHEAR KEY DETAIL

NOTE: OMIT SHEAR KEY ON OUTSIDE FACE OF EXTERIOR BOX BEAMS.

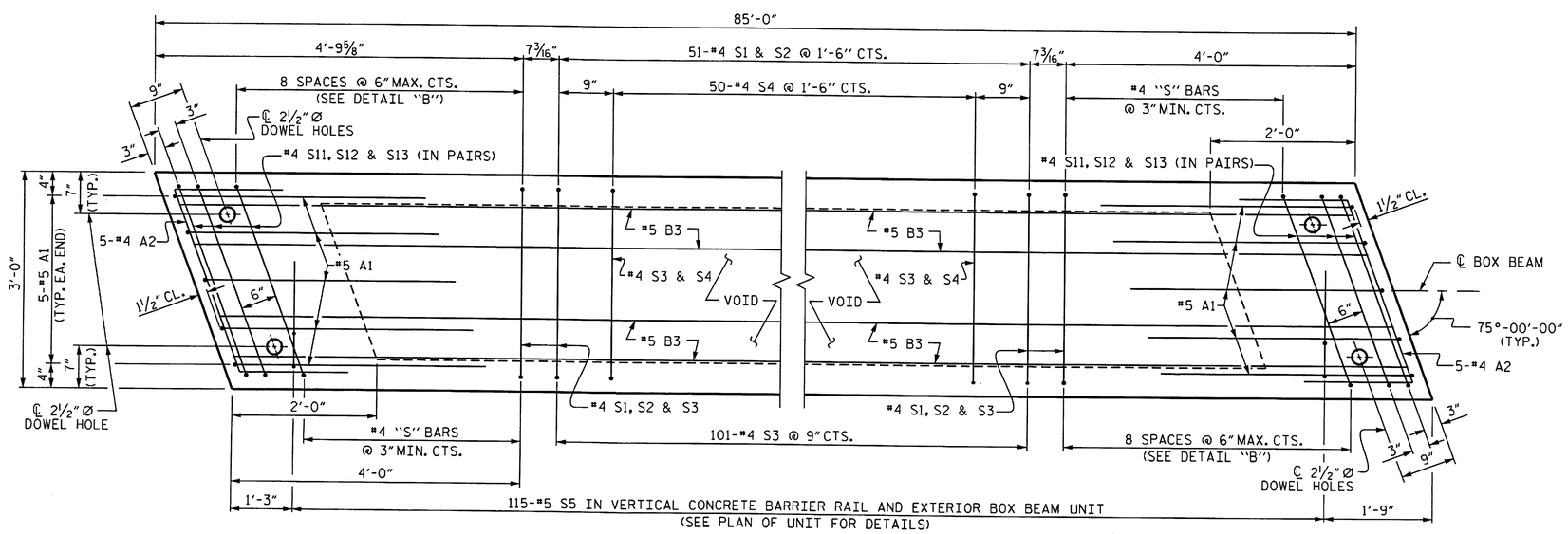

PLAN OF BOX BEAM

EXTERIOR UNIT SHOWN, INTERIOR UNIT SIMILAR EXCEPT OMIT #5 S5 BARS. FOR LOCATION OF DIAPHRAGMS, SEE PLAN OF UNIT. FOR REINFORCING STEEL IN DIAPHRAGMS, SEE DIAPHRAGM DETAILS.

NORTH CAROLINA PROFESSIONAL SEAL 21545 ENGINEER STEVEN K. WANCE

04/11/12

PROJECT NO. BD-5108S

RANDOLPH COUNTY

STATION: 13+25.50 -L-

SHEET 3 OF 5

STATE OF NORTH CAROLINA
DEPARTMENT OF TRANSPORTATION
RALEIGH

STANDARD

3'-0" X 2'-9"
PRESTRESSED CONCRETE
BOX BEAM UNIT

ASSEMBLED BY : S. WANCE PE	DATE : 02/12
CHECKED BY : T. H. FANG	DATE : 03/12
DRAWN BY : DGE 11/11	
CHECKED BY : TMG 11/11	

REVISIONS						SHEET NO.
NO.	BY:	DATE:	NO.	BY:	DATE:	S-6
1			3			TOTAL SHEETS
2			4			14

11-APR-2012 12:22
S:\DPG2\Ting\DIV8BD-Projects\BD-5108S\FinalPlans\BD5108S_SD_FINALPLANS.dgn
swance

STD. NO. 33PCBB4_75S_85L

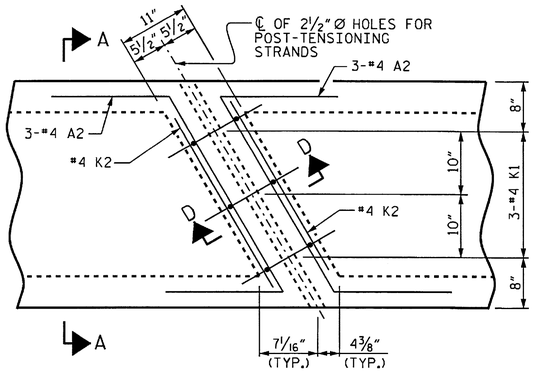

PLAN

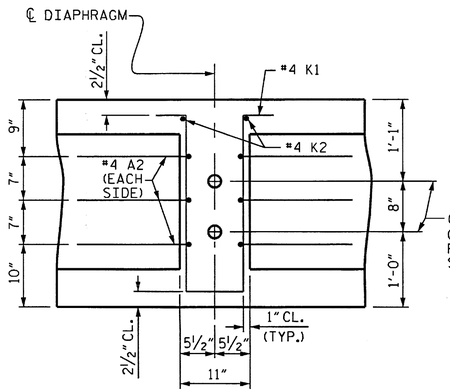

SECTION D-D

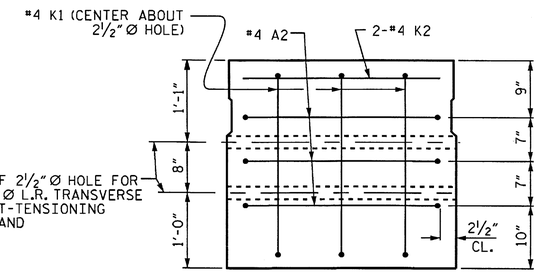

SECTION A-A

VOIDS NOT SHOWN

DOUBLE DIAPHRAGM DETAILS

#4 "S" BARS NOT SHOWN. #4 "S" BARS MAY BE SHIFTED SLIGHTLY TO CLEAR 2" Ø HOLE.

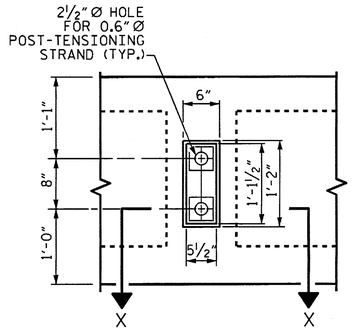

VIEW Y-Y

SHOWING ELEVATION VIEW OF GROUTED RECESS

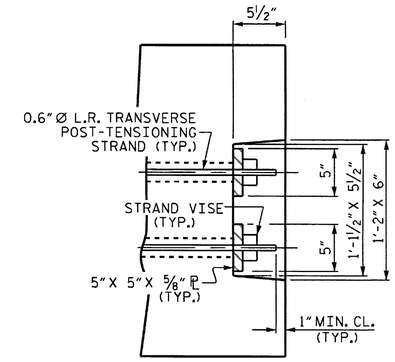

DETAIL "C"

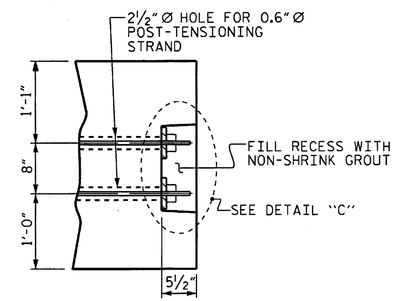

PART SECTION AT RECESS

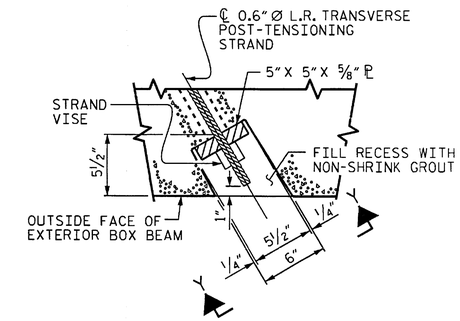

SECTION X-X

SHOWING PLAN VIEW OF GROUTED RECESS

GROUTED RECESS DETAIL AT END OF POST-TENSIONED STRANDS OF EXTERIOR BOX BEAM

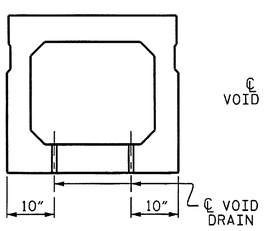

SECTION B-B

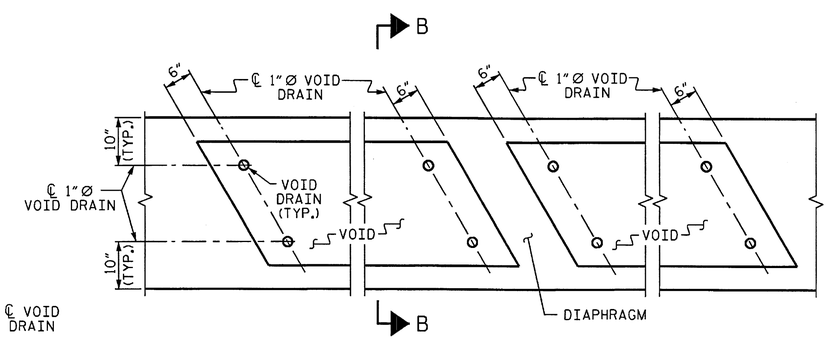

PART PLAN

VOID DRAIN DETAILS

(DIMENSIONS SHOWN ARE TYPICAL FOR EACH VOID)

DEAD LOAD DEFLECTION AND CAMBER	
	3'-0" x 2'-9"
85' BOX BEAM UNIT	0.6"Ø L.R. STRAND
CAMBER (SLAB ALONE IN PLACE)	3¾" ↑
DEFLECTION DUE TO SUPERIMPOSED DEAD LOAD**	¾" ↓
FINAL CAMBER	3" ↑

** INCLUDES FUTURE WEARING SURFACE

NORTH CAROLINA PROFESSIONAL SEAL 21545 ENGINEER STEVEN L. WANCE

04/11/12

PROJECT NO. BD-5108S

RANDOLPH COUNTY

STATION: 13+25.50 -L-

SHEET 4 OF 5

STATE OF NORTH CAROLINA
DEPARTMENT OF TRANSPORTATION
RALEIGH

STANDARD

3'-0" X 2'-9"
PRESTRESSED CONCRETE
BOX BEAM UNIT

REVISIONS						SHEET NO.
NO.	BY:	DATE:	NO.	BY:	DATE:	S-7
1			3			TOTAL SHEETS
2			4			14

ASSEMBLED BY : S. WANCE PE	DATE : 02/12
CHECKED BY : T. H. FANG	DATE : 03/12
DRAWN BY : DGE 11/11	
CHECKED BY : TMG 11/11	

11-APR-2012 12:22
S:\DPG2\Tlng\DIV8BD-Projects\BD-5108S\FinalPlans\BD5108S_SD_FINALPLANS.dgn
swance

STD.NO.33PCBB5_75S

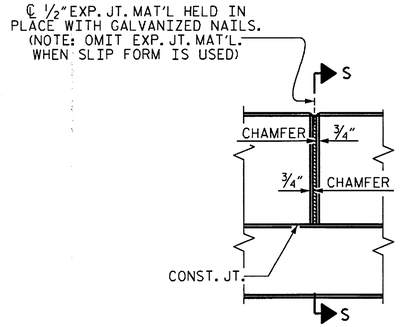

ELEVATION AT EXPANSION JOINTS

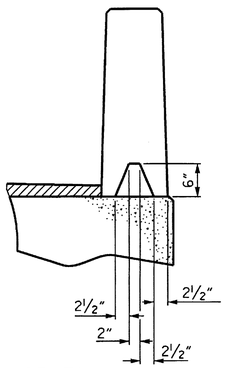

SECTION S-S
AT DAM IN OPEN JOINT
(THIS IS TO BE USED ONLY WHEN SLIP FORM IS USED)

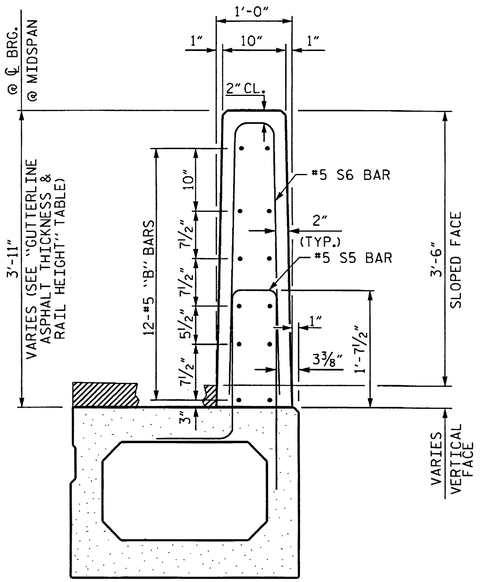

SECTION THRU RAIL

VERTICAL CONCRETE BARRIER RAIL DETAILS

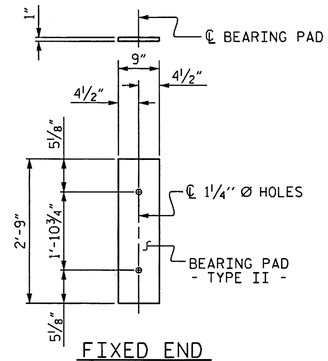

FIXED END
(TYPE II - 20 REQ'D)

ELASTOMERIC BEARING DETAILS

ELASTOMER IN ALL BEARINGS SHALL BE 60 DUROMETER HARDNESS.

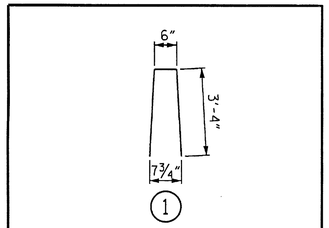

BAR TYPE
BAR DIMENSIONS ARE OUT TO OUT

BOX BEAM UNITS REQUIRED			
	NUMBER	LENGTH	TOTAL LENGTH
EXTERIOR B.B.	2	85'-0"	170'-0"
INTERIOR B.B.	8	85'-0"	680'-0"
TOTAL	10	———	850'-0"

BILL OF MATERIAL FOR VERTICAL CONCRETE BARRIER RAIL					
BAR	BARS PER PAIR OF EXTERIOR UNITS	SIZE	TYPE	LENGTH	WEIGHT
	85' UNIT				
* B9	144	#5	STR	15'-9"	2365
* S6	230	#5	1	7'-2"	1719
* EPOXY COATED REINFORCING STEEL			LBS.		4084
CLASS AA CONCRETE			CU.YDS.		22.8
TOTAL VERTICAL CONCRETE BARRIER RAIL			LN. FT.		170.0

GUTTERLINE ASPHALT THICKNESS & RAIL HEIGHT		
	ASPHALT OVERLAY THICKNESS @ MID-SPAN	RAIL HEIGHT @ MID-SPAN
85' UNITS	1 1/2"	3'-8"

NORTH CAROLINA PROFESSIONAL SEAL 21545 ENGINEER STEVEN L. WANCE
04/11/12

PROJECT NO. BD-5108S
RANDOLPH COUNTY
STATION: 13+25.50 -L-

SHEET 5 OF 5

STATE OF NORTH CAROLINA
DEPARTMENT OF TRANSPORTATION
RALEIGH

3'-0" X 2'-9"
PRESTRESSED CONCRETE
BOX BEAM UNIT

REVISIONS						SHEET NO.
NO.	BY:	DATE:	NO.	BY:	DATE:	S-8
1			3			TOTAL SHEETS
2			4			14

ASSEMBLED BY : S. WANCE PE DATE : 02/12
CHECKED BY : T. H. FANG DATE : 03/12
DRAWN BY : DGE 10/11
CHECKED BY : TMG 11/11

11-APR-2012 12:22
S:\DPG2\Tlng\DIV8BD-Projects\BD-5108S\FinalPlans\BD5108S_SD_FINALPLANS.dgn
swance

STD. NO. 33PCBB8_75&105S

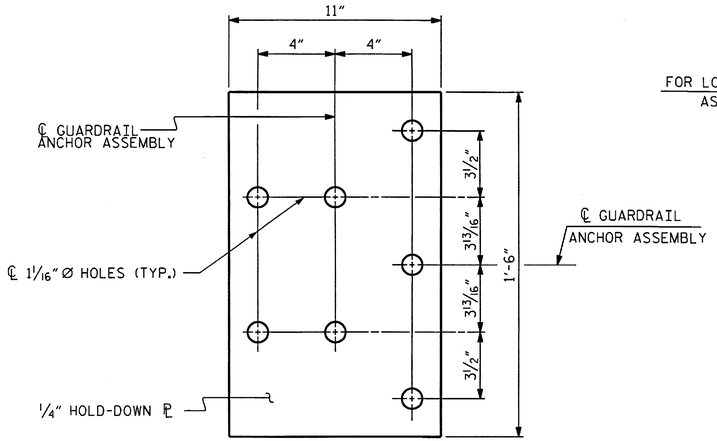

PLAN

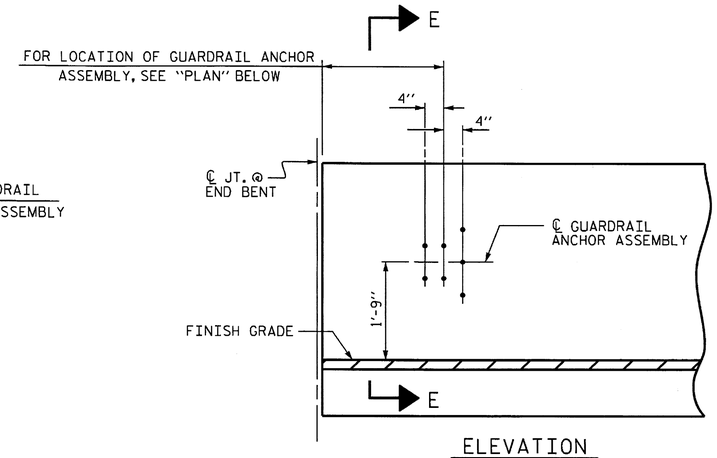

ELEVATION

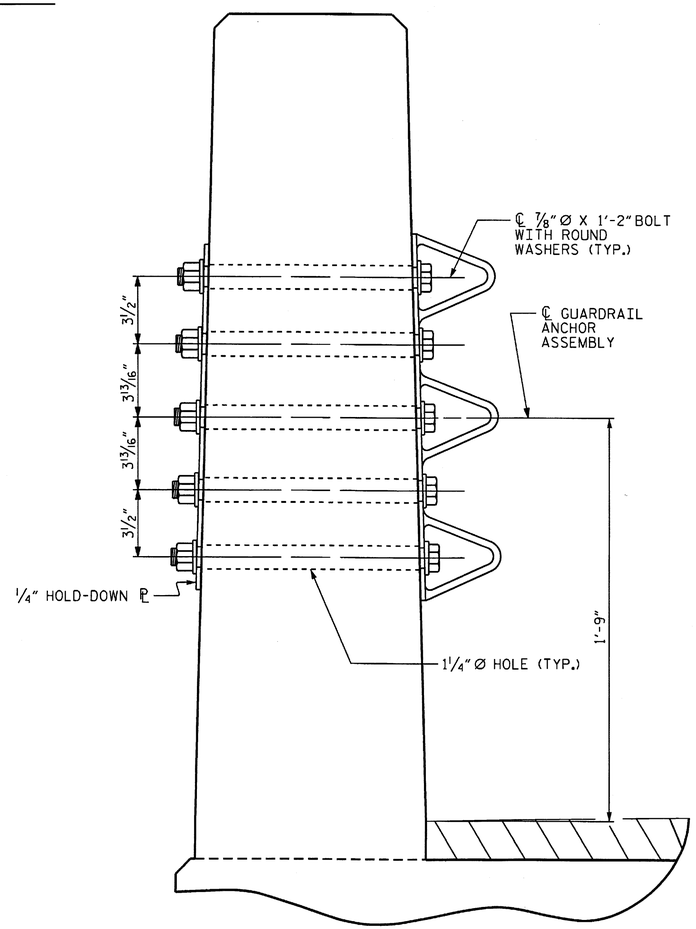

SECTION E-E

GUARDRAIL ANCHOR ASSEMBLY DETAILS

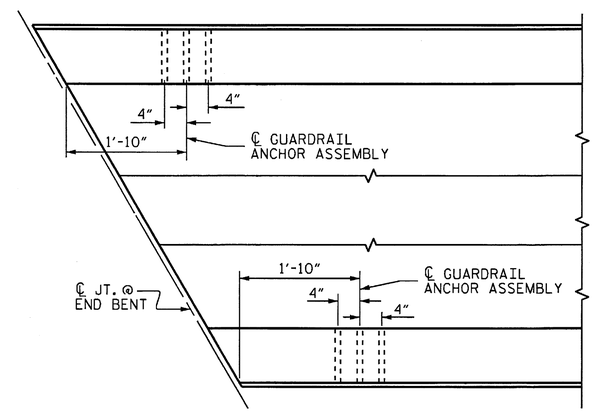

PLAN

LOCATION OF ANCHORS FOR GUARDRAIL

END BENT #1 SHOWN. END BENT #2 SIMILAR.

NOTES

THE GUARDRAIL ANCHOR ASSEMBLY SHALL CONSIST OF A 1/4" HOLD DOWN PLATE AND 7 - 7/8" Ø BOLTS WITH NUTS AND WASHERS.

THE HOLD-DOWN PLATE SHALL CONFORM TO AASHTO M270 GRADE 36. AFTER FABRICATION, THE HOLD-DOWN PLATE SHALL BE HOT-DIP GALVANIZED IN ACCORDANCE WITH AASHTO M111.

BOLTS SHALL CONFORM TO THE REQUIREMENTS OF ASTM A307 AND NUTS SHALL CONFORM TO THE REQUIREMENTS OF AASHTO M291. BOLTS, NUTS AND WASHERS SHALL BE GALVANIZED. (AT THE CONTRACTOR'S OPTION, STAINLESS STEEL BOLTS, NUTS AND WASHERS MAY BE USED AS AN ALTERNATE FOR THE 7/8" Ø GALVANIZED BOLTS, NUTS AND WASHERS. THEY SHALL CONFORM TO OR EXCEED THE MECHANICAL REQUIREMENTS OF ASTM A307. THE USE OF THIS ALTERNATE SHALL BE APPROVED BY THE ENGINEER.)

THE GUARDRAIL ANCHOR ASSEMBLY IS REQUIRED AT ALL POINTS WHERE APPROACH GUARDRAIL IS TO BE ATTACHED TO THE END OF BARRIER RAIL. FOR POINTS OF ATTACHMENT, SEE SKETCH.

AFTER INSTALLATION, THE EXPOSED THREAD OF THE BOLT SHALL BE BURRED WITH A SHARP POINTED TOOL.

THE COST OF THE GUARDRAIL ANCHOR ASSEMBLY SHALL BE INCLUDED IN THE UNIT CONTRACT PRICE BID FOR VERTICAL CONCRETE BARRIER RAIL.

THE VERTICAL REINFORCING BARS MAY BE SHIFTED SLIGHTLY IN THE VERTICAL CONCRETE BARRIER RAIL TO CLEAR ASSEMBLY BOLTS.

THE 1 1/4" Ø HOLES SHALL BE FORMED OR DRILLED WITH A CORE BIT. IMPACT TOOLS WILL NOT BE PERMITTED. ANY CONCRETE DAMAGED BY THIS WORK SHALL BE REPAIRED TO THE SATISFACTION OF THE ENGINEER.

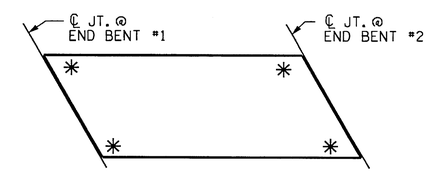

SKETCH SHOWING POINTS OF ATTACHMENT

✳ DENOTES GUARDRAIL ANCHOR ASSEMBLY

PROJECT NO. BD-5108S

RANDOLPH COUNTY

STATION: 13+25.50 -L-

NORTH CAROLINA PROFESSIONAL SEAL 21545 ENGINEER STEVEN L. WANCE

04/11/12

STATE OF NORTH CAROLINA
DEPARTMENT OF TRANSPORTATION
RALEIGH

STANDARD
GUARDRAIL ANCHORAGE FOR VERTICAL CONCRETE BARRIER RAIL

REVISIONS								SHEET NO.
NO.	BY:	DATE:	NO.	BY:	DATE:			S-9
1			3					TOTAL SHEETS
2			4					14

ASSEMBLED BY : S. WANCE PE		DATE : 02/12	
CHECKED BY : T. H. FANG		DATE : 03/12	
DRAWN BY : MAA 5/10	ADDED 5/6/10		
CHECKED BY : GM 5/10	REV. 10/1/11		MAA/GM
	REV. 12/5/11		MAA/GM

11-APR-2012 12:22
S:\DPG2\Tlng\DIV8BD-Projects\BD-5108S\FinalPlans\BD5108S_SD_FINALPLANS.dgn
swance

STD. NO. GRA3

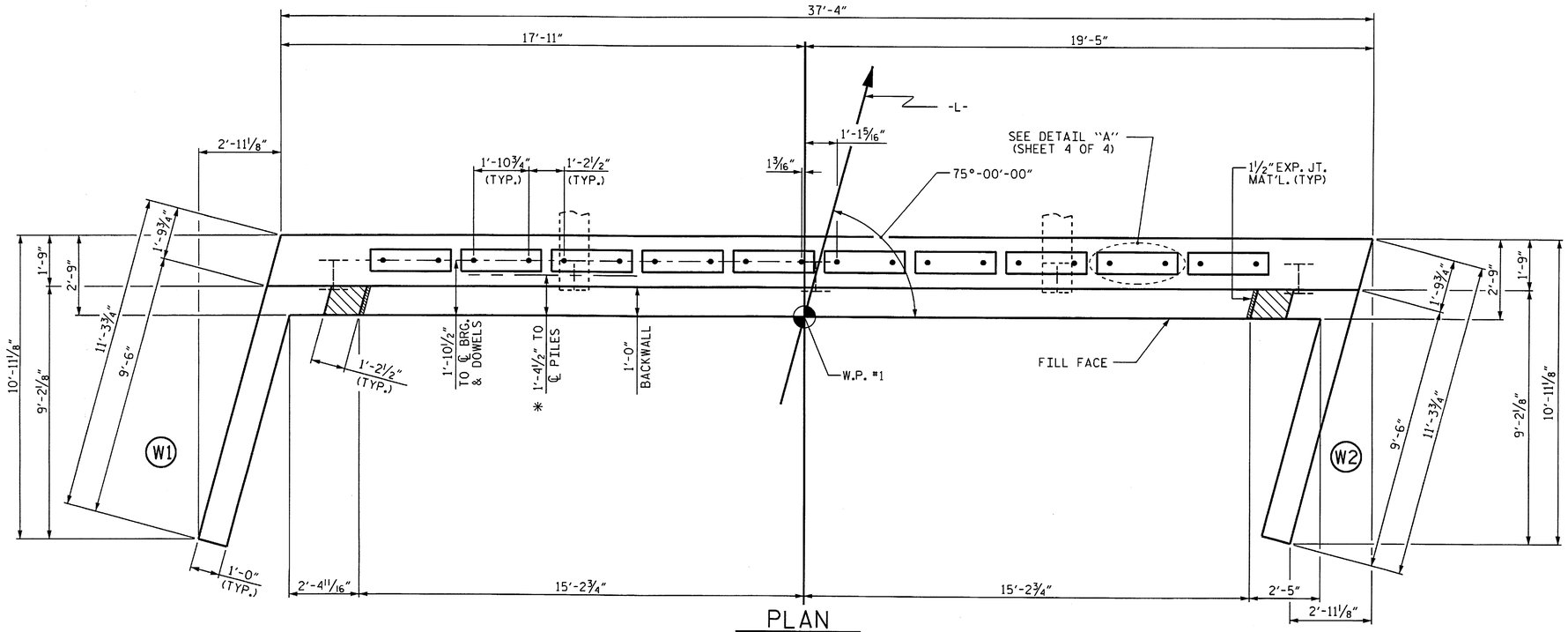

PLAN

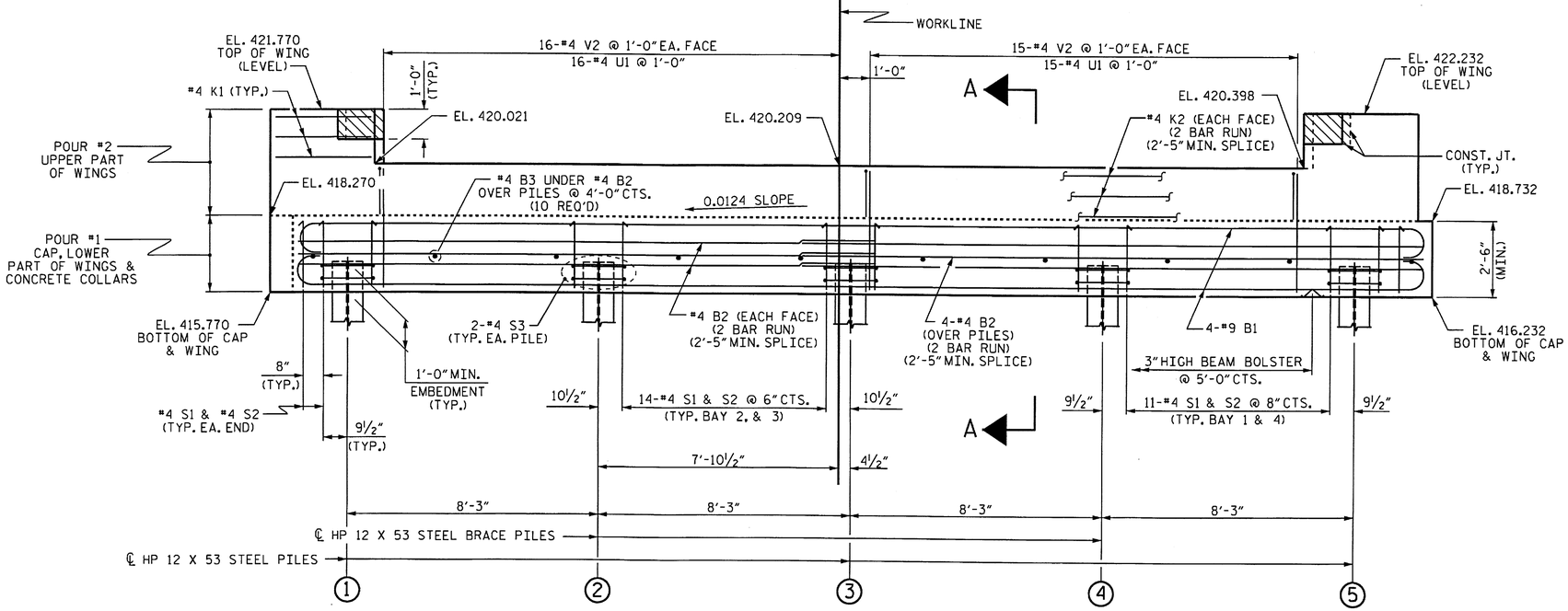

ELEVATION

WINGS NOT SHOWN FOR CLARITY.
FOR SECTION A-A, SEE SHEET 4 OF 4.
CONCRETE COLLARS FOR STEEL PILES NOT SHOWN IN PLAN AND ELEVATION VIEWS FOR CLARITY.
SEE "CORROSION PROTECTION FOR STEEL PILES DETAIL", SHEET 4 OF 4.

NOTES

STIRRUPS IN CAP MAY BE SHIFTED AS NECESSARY TO CLEAR DOWELS.

THE CONCRETE IN THE SHADED AREA OF THE WING SHALL BE POURED AFTER THE VERTICAL CONCRETE BARRIER RAIL IS CAST IF SLIP FORMING IS USED.

FOR PILE SPLICE DETAILS, SEE SHEET 4 OF 4.

FOR WING DETAILS, SEE SHEET 3 OF 4.

TOP OF PILE ELEVATIONS	
1	416.791
2	416.893
3	416.995
4	417.097
5	417.199

* NOTE: PILE POINTS REQUIRED AT END BENT No. 1.

PROJECT NO. BD-5108S
RANDOLPH COUNTY
STATION: 13+25.50 -L-

SHEET 1 OF 4

NORTH CAROLINA PROFESSIONAL SEAL 21545 ENGINEER STEVEN L. WANCE
05/04/12

STATE OF NORTH CAROLINA
DEPARTMENT OF TRANSPORTATION
RALEIGH

SUBSTRUCTURE

END BENT No. 1

ASSEMBLED BY : S. WANCE PE	DATE : 02/12
CHECKED BY : T. H. FANG	DATE : 03/12
DRAWN BY : WJH	12/11
CHECKED BY : AAC	12/11

REVISIONS						SHEET NO.
NO.	BY:	DATE:	NO.	BY:	DATE:	S-10
1			3			TOTAL SHEETS
2			4			14

04-MAY-2012 17:34
S:\DPC2\Ting\DIV8BD-Projects\BD-5108S\FinalPlans\BD5108S_SD_FINALPLANS.dgn
swance

STD. NO. EB_30_75S4_33BB

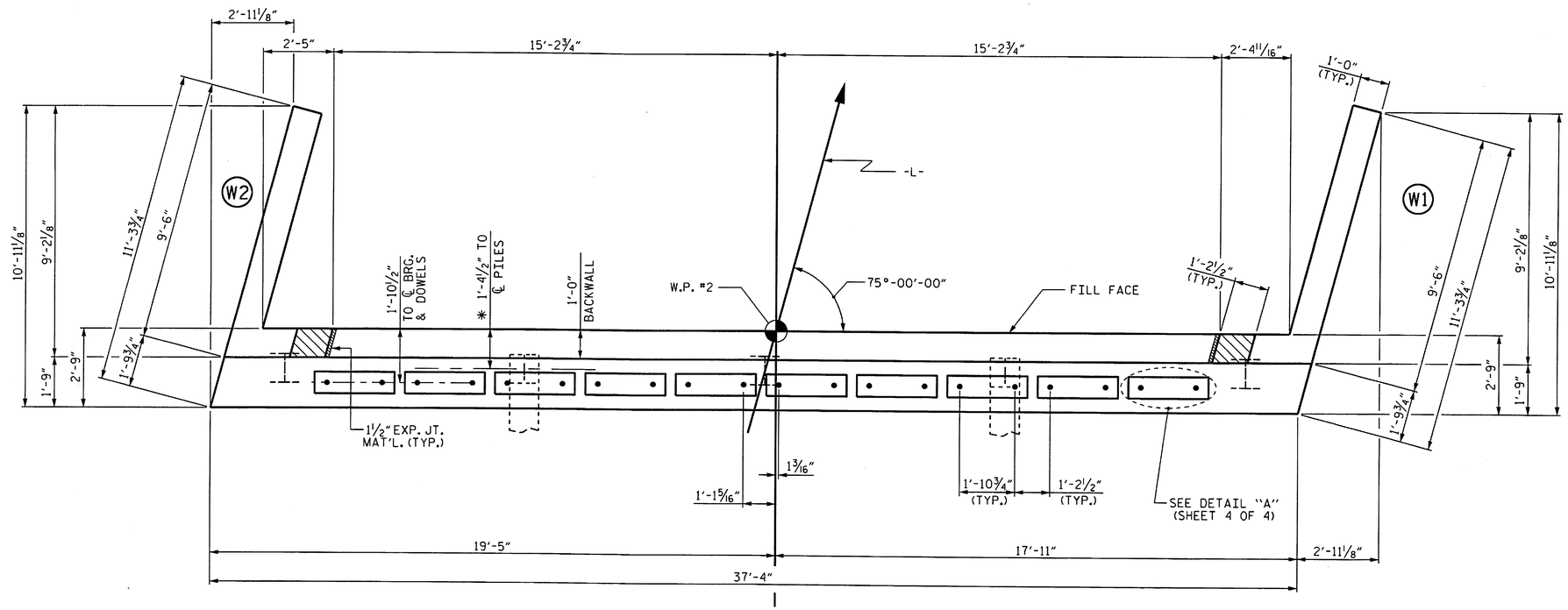

PLAN

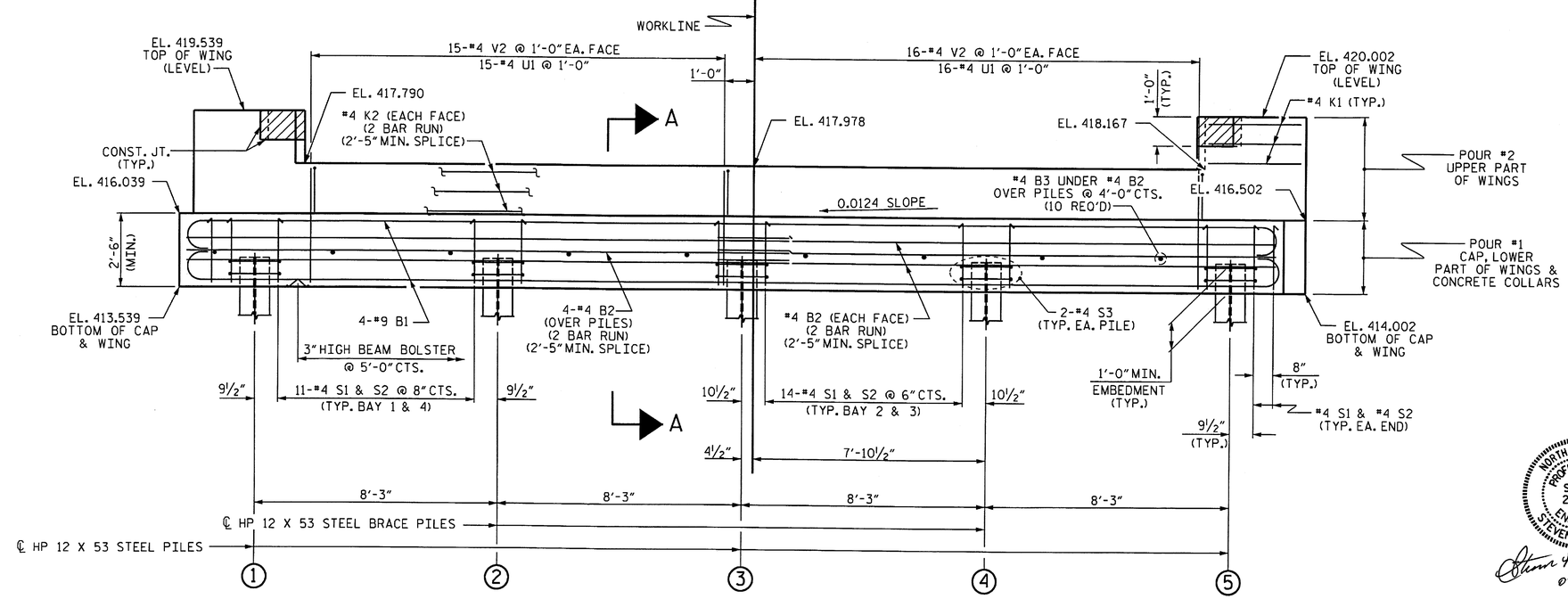

ELEVATION

WINGS NOT SHOWN FOR CLARITY.
FOR SECTION A-A, SEE SHEET 4 OF 4.
CONCRETE COLLARS FOR STEEL PILES NOT SHOWN IN PLAN AND ELEVATION VIEWS FOR CLARITY.
SEE "CORROSION PROTECTION FOR STEEL PILES DETAIL", SHEET 4 OF 4.

NOTES

STIRRUPS IN CAP MAY BE SHIFTED AS NECESSARY TO CLEAR DOWELS.

THE CONCRETE IN THE SHADED AREA OF THE WING SHALL BE POURED AFTER THE VERTICAL CONCRETE BARRIER RAIL IS CAST IF SLIP FORMING IS USED.

FOR PILE SPLICE DETAILS, SEE SHEET 4 OF 4.

FOR WING DETAILS, SEE SHEET 3 OF 4.

TOP OF PILE ELEVATIONS	
1	414.560
2	414.662
3	414.764
4	414.866
5	414.968

* NOTE: PILE POINTS REQUIRED AT END BENT No. 2.

PROJECT NO. BD-5108S
RANDOLPH COUNTY
STATION: 13+25.50 -L-

SHEET 2 OF 4

STATE OF NORTH CAROLINA
DEPARTMENT OF TRANSPORTATION
RALEIGH

SUBSTRUCTURE
END BENT No. 2

NORTH CAROLINA PROFESSIONAL SEAL 21545 ENGINEER STEVEN L. WANCE
05/04/12

ASSEMBLED BY : S. WANCE PE	DATE : 02/12
CHECKED BY : T. H. FANG	DATE : 03/12
DRAWN BY : WJH 12/11	
CHECKED BY : AAC 12/11	

REVISIONS						SHEET NO.
NO.	BY:	DATE:	NO.	BY:	DATE:	S-11
1			3			TOTAL SHEETS
2			4			14

04-MAY-2012 17:34
S:\DPG2\Ting\DIV8BD-Projects\BD-5108S\Final Plans\BD5108S_SD_FINALPLANS.dgn
swance

STD. NO. EB_30_75S4_33BB

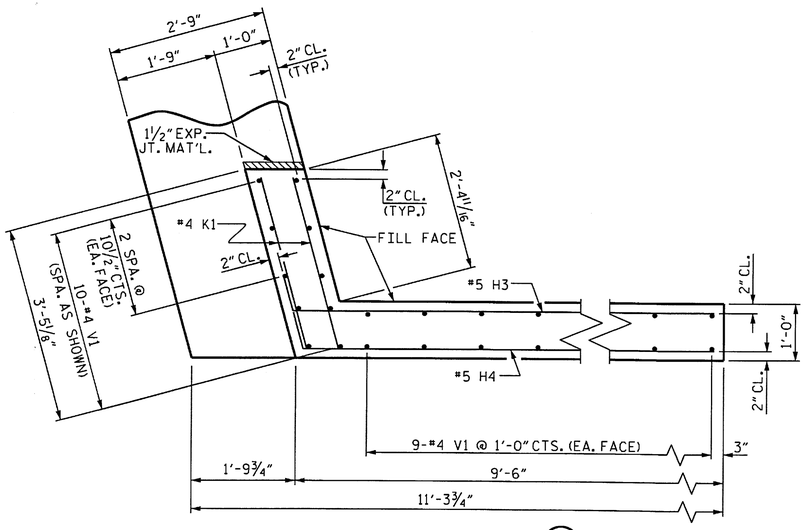

PLAN OF WING (W1)

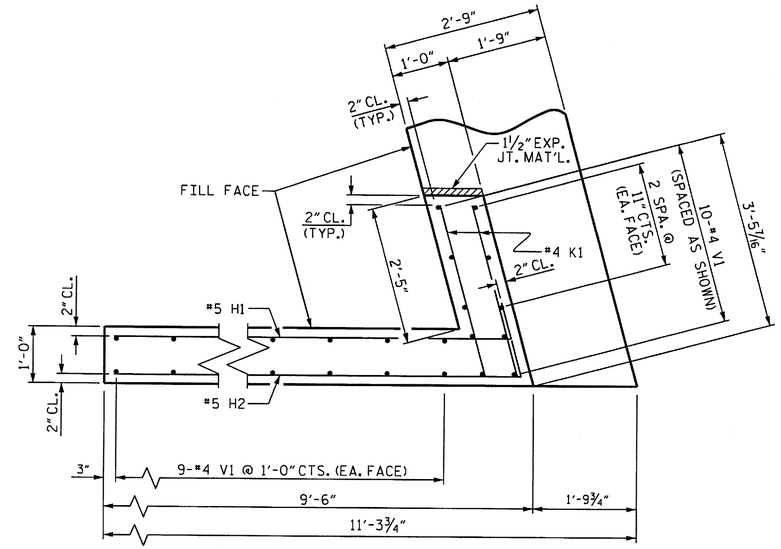

PLAN OF WING (W2)

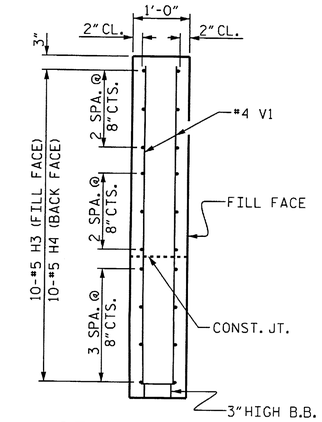

SECTION X-X

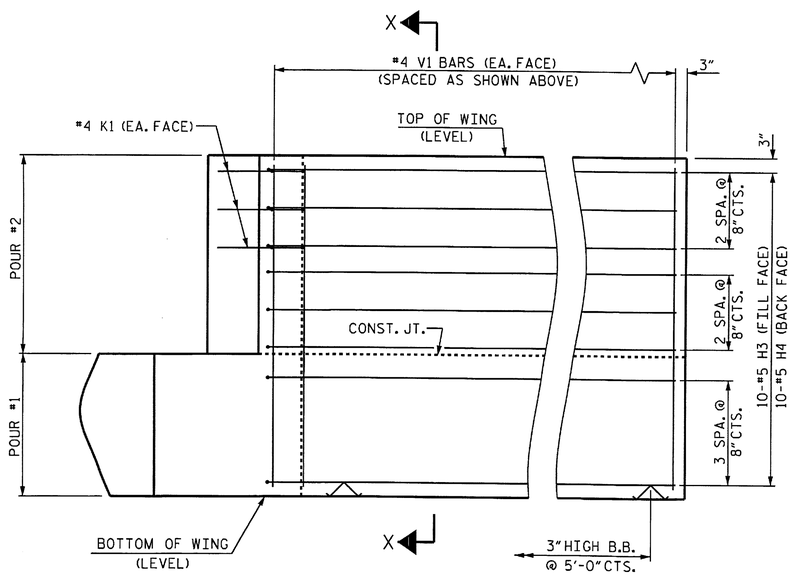

ELEVATION OF WING (W1)

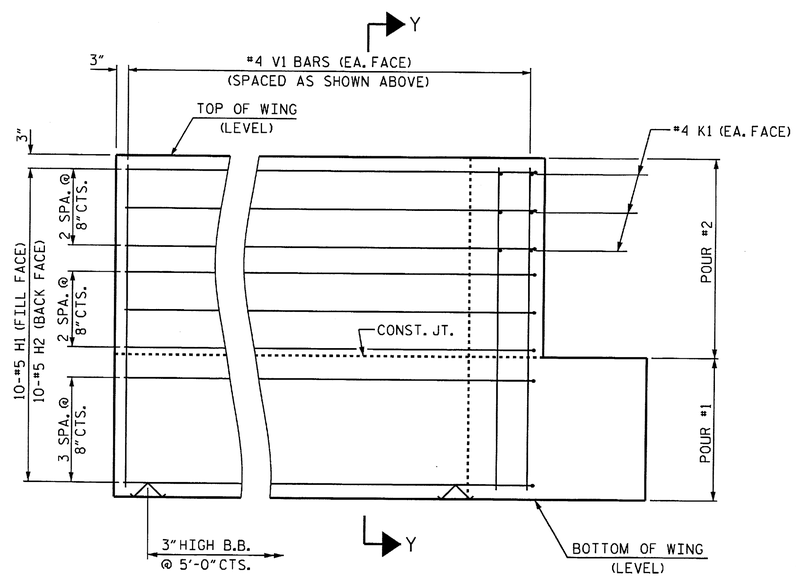

ELEVATION OF WING (W2)

WING DETAILS

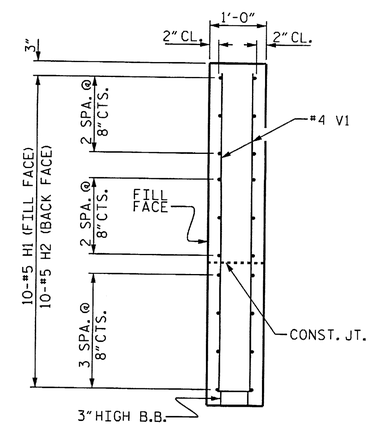

SECTION Y-Y

PROJECT NO. BD-5108S

RANDOLPH COUNTY

STATION: 13+25.50 -L-

SHEET 3 OF 4

NORTH CAROLINA PROFESSIONAL SEAL 21545 ENGINEER STEVEN L. WANCE

05/04/12

STATE OF NORTH CAROLINA
DEPARTMENT OF TRANSPORTATION
RALEIGH

SUBSTRUCTURE

END BENT
WING DETAILS

REVISIONS							SHEET NO.
NO.	BY:	DATE:	NO.	BY:	DATE:		S-12
1			3				TOTAL SHEETS
2			4				14

DRAWN BY : S. WANCE PE DATE : 02/12
CHECKED BY : T. H. FANG DATE : 03/12

04-MAY-2012 17:34
S:\DPG2\Tmg\DIV8BD-Projects\BD-5108S\FinalPlans\BD5108S_SD_FINALPLANS.dgn
swance

STD. NO. EB_30_75S4_33BB

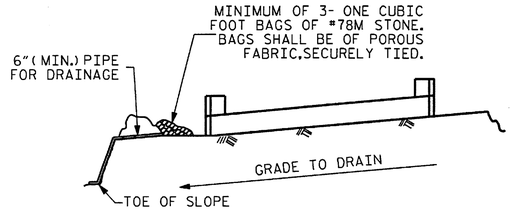

BAGGED STONE AND PIPE SHALL BE PLACED IMMEDIATELY AFTER COMPLETION OF END BENT EXCAVATION. PIPE MAY BE EITHER CONCRETE, CORRUGATED STEEL, CORRUGATED ALUMINUM ALLOY, OR CORRUGATED PLASTIC. PERFORATED PIPE WILL NOT BE ALLOWED.

BAGGED STONE SHALL REMAIN IN PLACE UNTIL THE ENGINEER DIRECTS THAT IT BE REMOVED. THE CONTRACTOR SHALL REMOVE AND DISPOSE OF SILT ACCUMULATIONS AT BAGGED STONE WHEN SO DIRECTED BY THE ENGINEER. BAGS SHALL BE REMOVED AND REPLACED WHENEVER THE ENGINEER DETERMINES THAT THEY HAVE DETERIORATED AND LOST THEIR EFFECTIVENESS.

NO SEPARATE PAYMENT WILL BE MADE FOR THIS WORK AND THE ENTIRE COST OF THIS WORK SHALL BE INCLUDED IN THE UNIT CONTRACT PRICE BID FOR THE SEVERAL PAY ITEMS.

TEMPORARY DRAINAGE AT END BENT

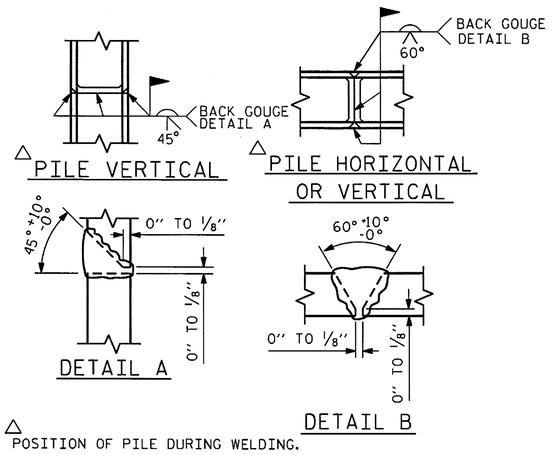

PILE SPLICE DETAILS

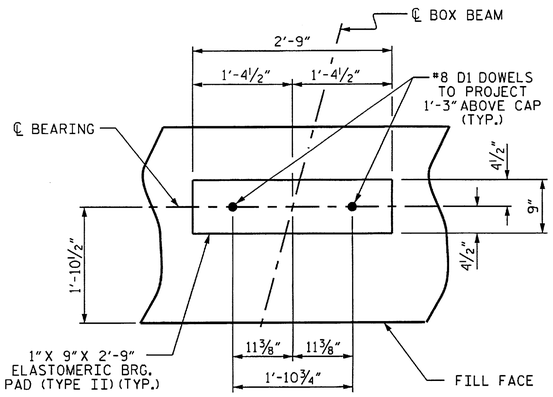

DETAIL "A"

(END BENT No. 1 SHOWN, END BENT No. 2 SIMILAR BY ROTATION)

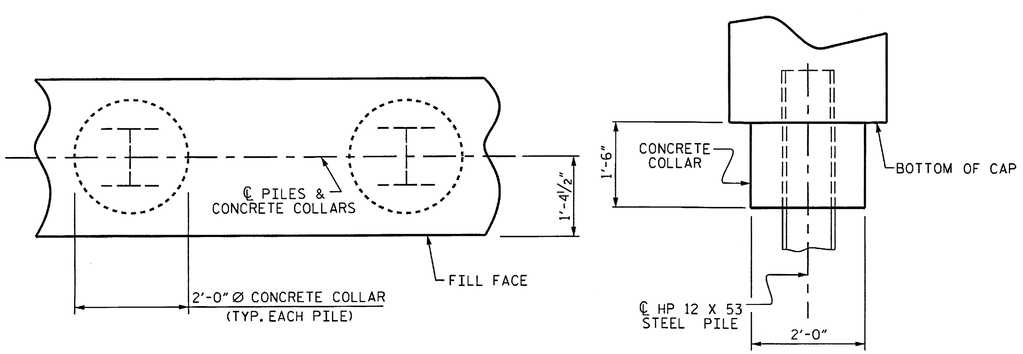

PLAN

ELEVATION

CORROSION PROTECTION FOR STEEL PILES DETAIL

(END BENT No. 1 SHOWN, END BENT No. 2 SIMILAR BY ROTATION)

BAR TYPES

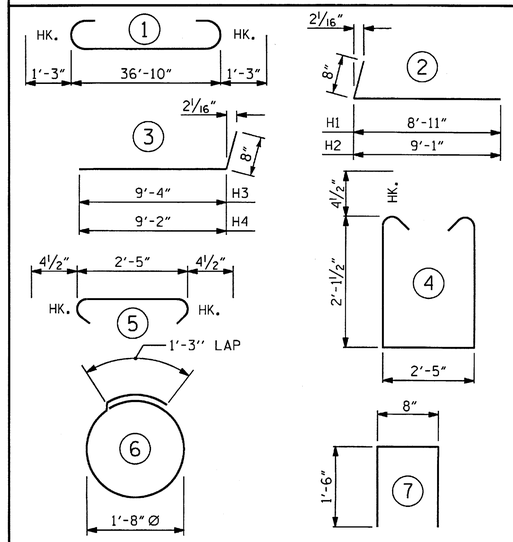

ALL BAR DIMENSIONS ARE OUT TO OUT.

END BENT No. 1	END BENT No. 2
HP 12 X 53 STEEL PILES	HP 12 X 53 STEEL PILES
NO: 5 LIN. FT.= 50	NO: 5 LIN. FT.= 50
STEEL PILE POINTS EA. = 5	STEEL PILE POINTS EA. = 5

BILL OF MATERIAL FOR ONE END BENT

BAR	NO.	SIZE	TYPE	LENGTH	WEIGHT
B1	8	#9	1	39'-4"	1070
B2	16	#4	STR	19'-9"	211
B3	10	#4	STR	2'-5"	16
D1	20	#8	STR	2'-3"	120
H1	10	#5	2	9'-7"	100
H2	10	#5	2	9'-9"	102
H3	10	#5	3	10'-0"	104
H4	10	#5	3	9'-10"	103
K1	12	#4	STR	3'-1"	25
K2	12	#4	STR	19'-9"	158
S1	54	#4	4	7'-5"	268
S2	54	#4	5	3'-2"	114
S3	10	#4	6	6'-6"	43
U1	31	#4	7	3'-8"	76
V1	56	#4	STR	5'-8"	212
V2	62	#4	STR	3'-10"	159

REINFORCING STEEL (FOR ONE END BENT) 2881 LBS.

CLASS A CONCRETE BREAKDOWN (FOR ONE END BENT)

POUR #1	CAP, LOWER PART OF WINGS & COLLARS	12.0 C.Y.
POUR #2	BACKWALL & UPPER PART OF WINGS	5.1 C.Y.
TOTAL CLASS A CONCRETE		17.1 C.Y.

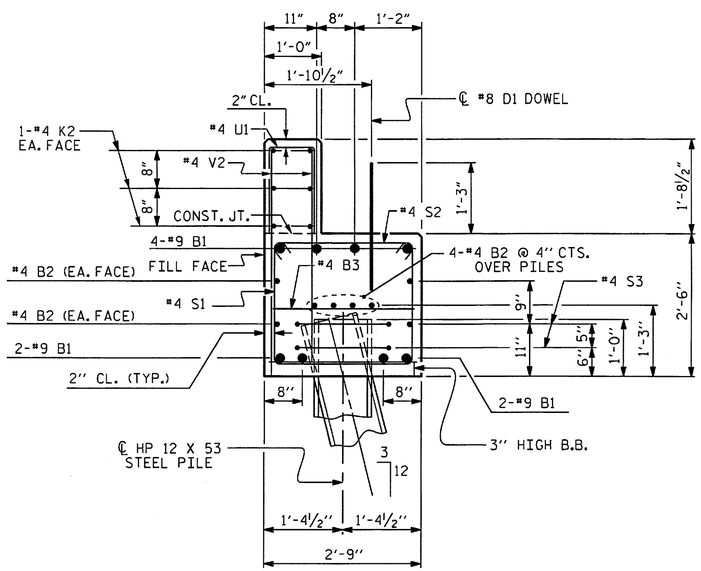

SECTION A-A

(CONCRETE COLLAR NOT SHOWN FOR CLARITY. SEE "CORROSION PROTECTION FOR STEEL PILES DETAIL.")

NORTH CAROLINA PROFESSIONAL SEAL 21545 ENGINEER STEVEN L. WANCE

05/04/12

PROJECT NO. BD-5108S

RANDOLPH COUNTY

STATION: 13+25.50 -L-

SHEET 4 OF 4

STATE OF NORTH CAROLINA
DEPARTMENT OF TRANSPORTATION
RALEIGH

SUBSTRUCTURE

END BENT No. 1 & 2 DETAILS

REVISIONS						
NO.	BY:	DATE:	NO.	BY:	DATE:	
1			3			
2			4			

SHEET NO. S-13

TOTAL SHEETS 14

ASSEMBLED BY : S. WANCE PE	DATE : 02/12	
CHECKED BY : T. H. FANG	DATE : 03/12	
DRAWN BY : WJH 12/11		
CHECKED BY : AAC 12/11		

04-MAY-2012 17:34
S:\DPG2\Tlng\DIV8BD-Projects\BD-5108S\FinalPlans\BD5108S_SD_FINALPLANS.dgn
swance

STD. NO. EB_30_75S4_33BB

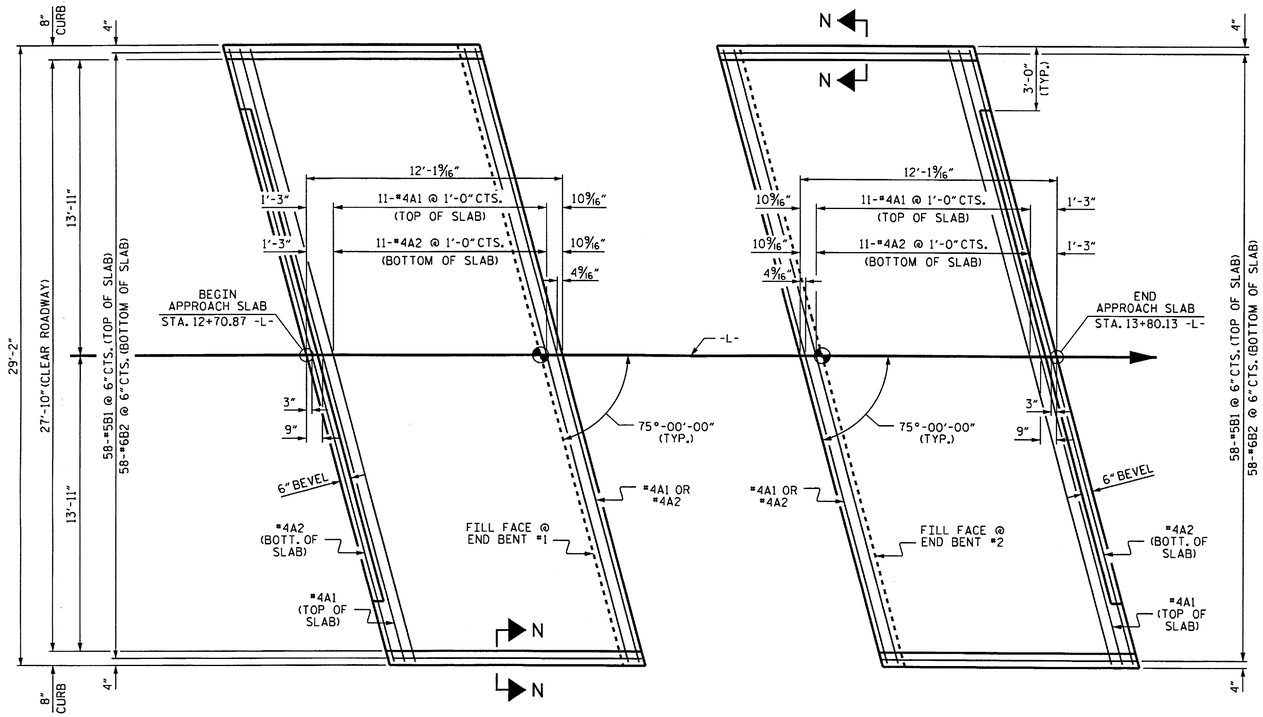

PLAN @ END BENT #1

PLAN @ END BENT #2

DIMENSIONS SHOWN ARE TYPICAL FOR BOTH APPROACH SLABS

NOTES

FOR BRIDGE APPROACH FILL INCLUDING GEOTEXTILE, 4" Ø DRAINAGE PIPE, AND #78M STONE BACKFILL, SEE ROADWAY PLANS.

GEOTEXTILE SHALL BE TYPE 1 IN ACCORDANCE WITH THE STANDARD SPECIFICATIONS SECTION 1056.

#78M STONE BACKFILL (CLASS V SELECT MATERIAL) SHALL BE IN ACCORDANCE WITH STANDARD SPECIFICATIONS SECTION 1016.

#78M STONE BACKFILL IS TO BE CONTINUOUS ALONG FILL FACE OF BACKWALL FROM OUTSIDE EDGE TO OUTSIDE EDGE OF APPROACH SLAB.

FOR THE 4" Ø DRAINAGE PIPE OUTLET(S), SEE ROADWAY STANDARD DRAWINGS.

AREA BETWEEN THE WINGWALL AND APPROACH SLAB SHALL BE GRADED TO DRAIN THE WATER AWAY FROM THE FILL FACE OF THE BRIDGE AND SHALL BE PAVED. SEE ROADWAY PLANS.

APPROACH SLAB GROOVING IS NOT REQUIRED.

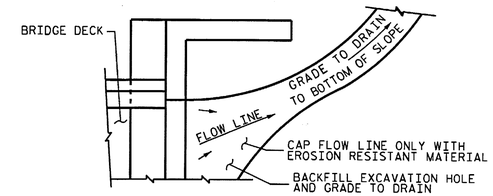

NOTE: IF THE APPROACH SLAB IS NOT CONSTRUCTED IMMEDIATELY AFTER THE BACKFILLING OF THE END BENT EXCAVATION, GRADE TO DRAIN TO THE BOTTOM OF THE SLOPE AND PROVIDE EROSION RESISTANT MATERIAL, SUCH AS FIBERGLASS ROVING OR AS DIRECTED BY THE ENGINEER TO PREVENT SOIL EROSION AND TO PROTECT THE AREA ADJACENT TO THE STRUCTURE. THE CONTRACTOR WILL BE REQUIRED TO REMOVE THESE MATERIALS PRIOR TO CONSTRUCTION OF THE APPROACH SLAB.

BILL OF MATERIAL

APPROACH SLAB AT EB #1

BAR	NO.	SIZE	TYPE	LENGTH	WEIGHT
* A1	13	#4	STR	29'-10"	259
A2	13	#4	STR	29'-10"	259
* B1	58	#5	STR	11'-1"	670
B2	58	#6	STR	11'-7"	1009
REINFORCING STEEL				LBS.	1268
* EPOXY COATED REINFORCING STEEL				LBS.	929
CLASS AA CONCRETE				C. Y.	15.6

APPROACH SLAB AT EB #2

BAR	NO.	SIZE	TYPE	LENGTH	WEIGHT
* A1	13	#4	STR	29'-10"	259
A2	13	#4	STR	29'-10"	259
* B1	58	#5	STR	11'-1"	670
B2	58	#6	STR	11'-7"	1009
REINFORCING STEEL				LBS.	1268
* EPOXY COATED REINFORCING STEEL				LBS.	929
CLASS AA CONCRETE				C. Y.	15.6

TEMPORARY DRAINAGE DETAIL

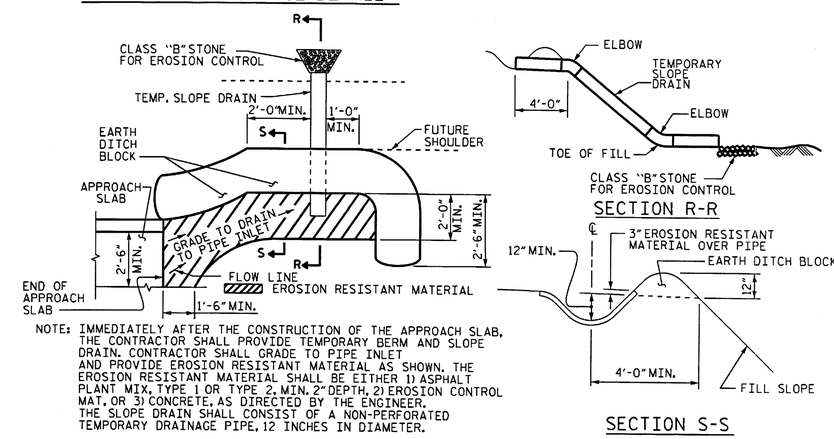

NOTE: IMMEDIATELY AFTER THE CONSTRUCTION OF THE APPROACH SLAB, THE CONTRACTOR SHALL PROVIDE TEMPORARY BERM AND SLOPE DRAIN. CONTRACTOR SHALL GRADE TO PIPE INLET AND PROVIDE EROSION RESISTANT MATERIAL AS SHOWN. THE EROSION RESISTANT MATERIAL SHALL BE EITHER 1) ASPHALT PLANT MIX, TYPE 1 OR TYPE 2, MIN. 2" DEPTH, 2) EROSION CONTROL MAT, OR 3) CONCRETE, AS DIRECTED BY THE ENGINEER. THE SLOPE DRAIN SHALL CONSIST OF A NON-PERFORATED TEMPORARY DRAINAGE PIPE, 12 INCHES IN DIAMETER.

PLAN VIEW

TEMPORARY BERM AND SLOPE DRAIN DETAILS

(TO BE USED WHEN SHOULDER BERM GUTTER IS REQUIRED)

SPLICE LENGTHS		
BAR SIZE	EPOXY COATED	UNCOATED
#4	2'-0"	1'-9"
#5	2'-6"	2'-2"
#6	3'-10"	2'-7"

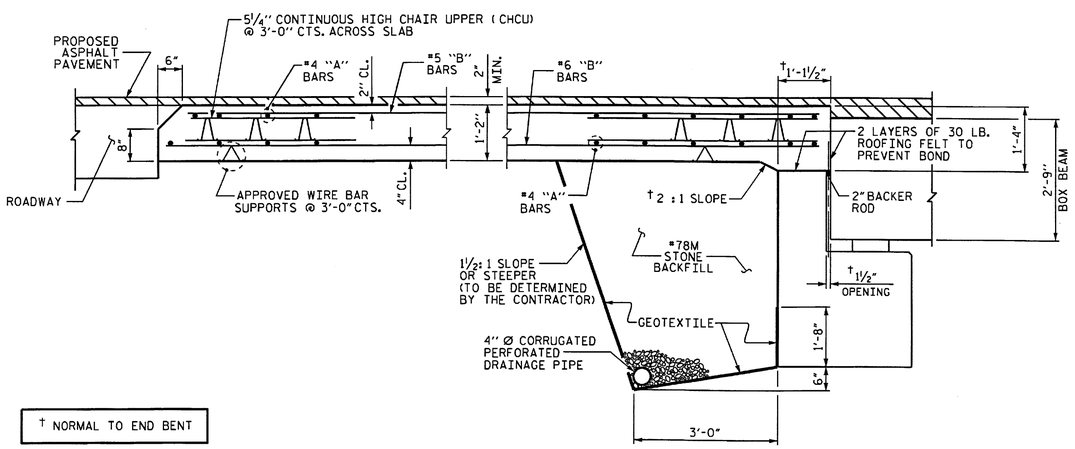

† NORMAL TO END BENT

SECTION THRU SLAB

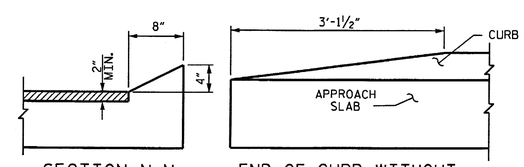

SECTION N-N

END OF CURB WITHOUT SHOULDER BERM GUTTER

CURB DETAILS

PROJECT NO. BD-5108S

RANDOLPH COUNTY

STATION: 13+25.50 -L-

STATE OF NORTH CAROLINA
DEPARTMENT OF TRANSPORTATION
RALEIGH

STANDARD
BRIDGE APPROACH SLAB
FOR PRESTRESSED CONCRETE
BOX BEAM UNIT
(SUB-REGIONAL TIER)
75° SKEW

NORTH CAROLINA PROFESSIONAL SEAL 21545 ENGINEER STEVEN L. WANCE
05/04/12

REVISIONS						SHEET NO.
NO.	BY:	DATE:	NO.	BY:	DATE:	S-14
1			3			TOTAL SHEETS
2			4			14

ASSEMBLED BY :	S. WANCE PE	DATE :	02/12
CHECKED BY :	T. H. FANG	DATE :	03/12
DRAWN BY : MAA	11/11		
CHECKED BY : AAC	11/11		

04-MAY-2012 17:34
S:\DPG2\Tlng\DIV8BD-Projects\BD-5108S\FinalPlans\BD5108S_SD_FINALPLANS.dgn
swance

STD. NO. BAS_BB_30_75S

T.I.P. NO.	SHEET NO.
BD-5108S	UO-1

TIP PROJECT: BD-5108S

See Sheet 1-A For Index of Sheets
See Sheet 1-B For Conventional symbols
See Sheet 1-C For Survey Control Sheet

STATE OF NORTH CAROLINA
DIVISION OF HIGHWAYS

RANDOLPH COUNTY

LOCATION: BRIDGE NO. 210 OVER MEADOW CREEK ON ON SR 2869 (MEADOWBRANCH ROAD)

TYPE OF WORK: GRADING, DRAINAGE, PAVING, STRUCTURE

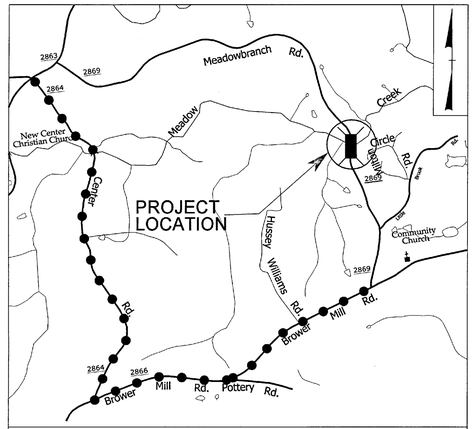

VICINITY MAP

OFF-SITE DETOUR ROUTE

NC GRID NAD 83

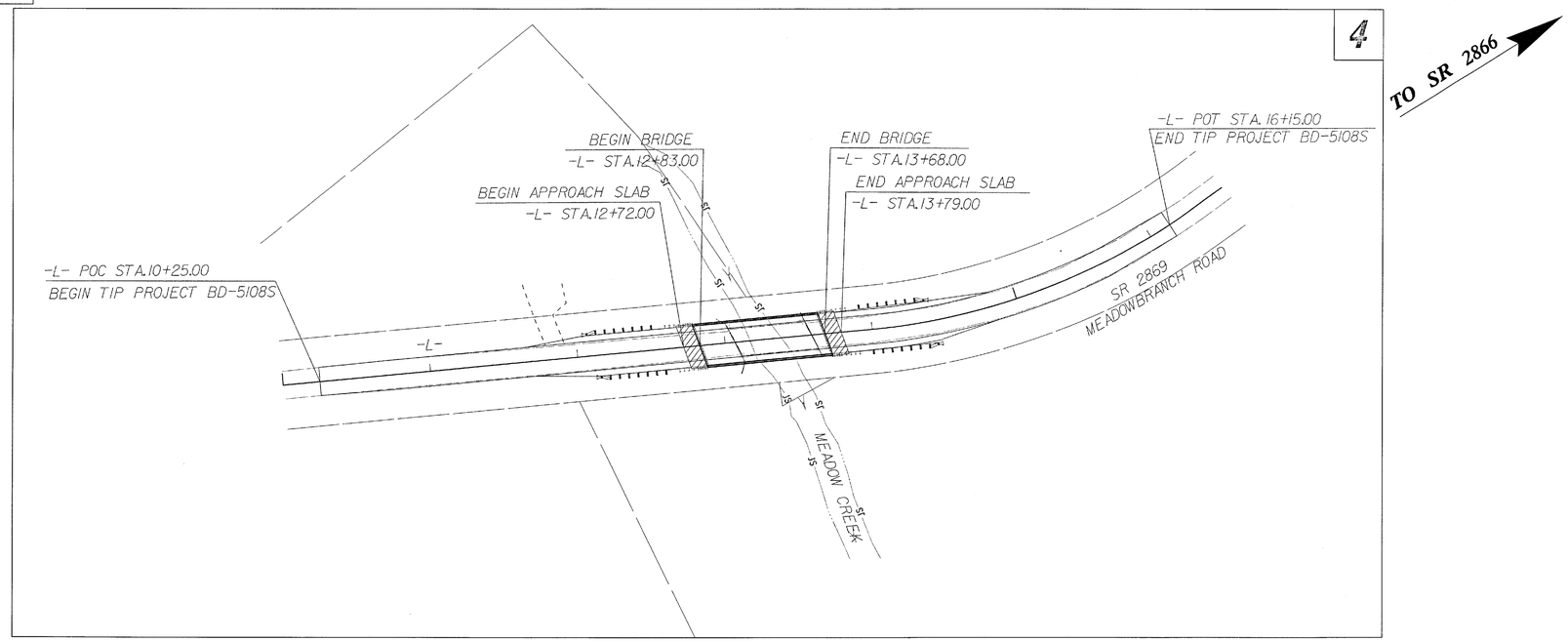

REVISIONS

24-FEB-2012 16:34
Y:\Projects\NCDOT\Division On-Call SEP\BD-5108S - Randolph\Utilities\bd5108S_RDY_tsh_UBO.dgn
CNewsome AT RALEWCNEWSOME

GRAPHIC SCALES

50 25 0 50 100
PLANS

50 25 0 50 100
PROFILE (HORIZONTAL)

10 5 0 10 20
PROFILE (VERTICAL)

INDEX OF SHEETS

SHEET NO.	DESCRIPTION
UO-1	TITLE SHEET
UO-2	UTILITIES BY OTHERS PLAN SHEET

UTILITY OWNERS ON PROJECT

(1) Randolph Telephone (Telecommunications)
(2) Randolph EMC (Power Distribution)

PREPARED IN THE OFFICE OF:
DIVISION OF HIGHWAYS
UTILITIES ENGINEERING SECTION
1591 MAIL SERVICES CENTER
RALEIGH NC 27699-1591
PHONE (919) 707-6690
FAX (919) 250-4151

Roger Worthington, P.E. — UTILITIES SECTION ENGINEER
Ronald B. Wilkins, P.E. — UTILITIES SQUAD LEADER PROJECT ENGINEER
Brandy Creech — UTILITIES COORDINATION CONSULTANT

PROJECT REFERENCE NO.	SHEET NO.
BD-5108S	U0-2
R/W SHEET NO.	4

THE LPA GROUP
TRANSPORTATION CONSULTANTS

UTILITIES BY OTHERS

NOTE:
ALL PROPOSED UTILITY WORK SHOWN ON THIS SHEET WILL BE DONE BY OTHERS

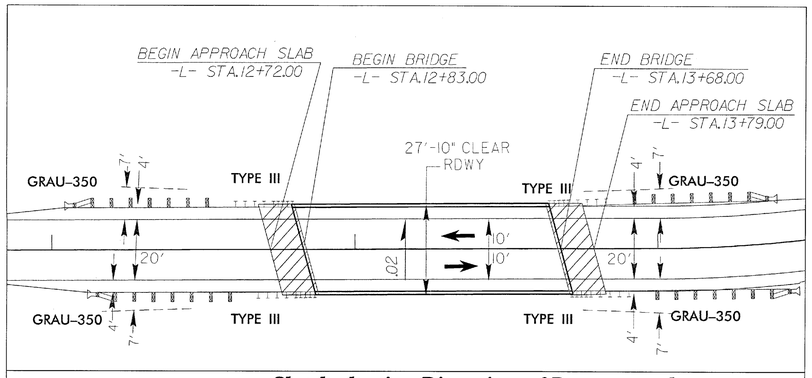

Sketch showing Dimensions of Pavement and Shoulder in Relation to Proposed Bridge Width

PI Sta 15+19.89
Δ = 30° 41' 28.1" (LT)
D = 13° 01' 18.4"
L = 235.69'
T = 120.75'
R = 440.00'

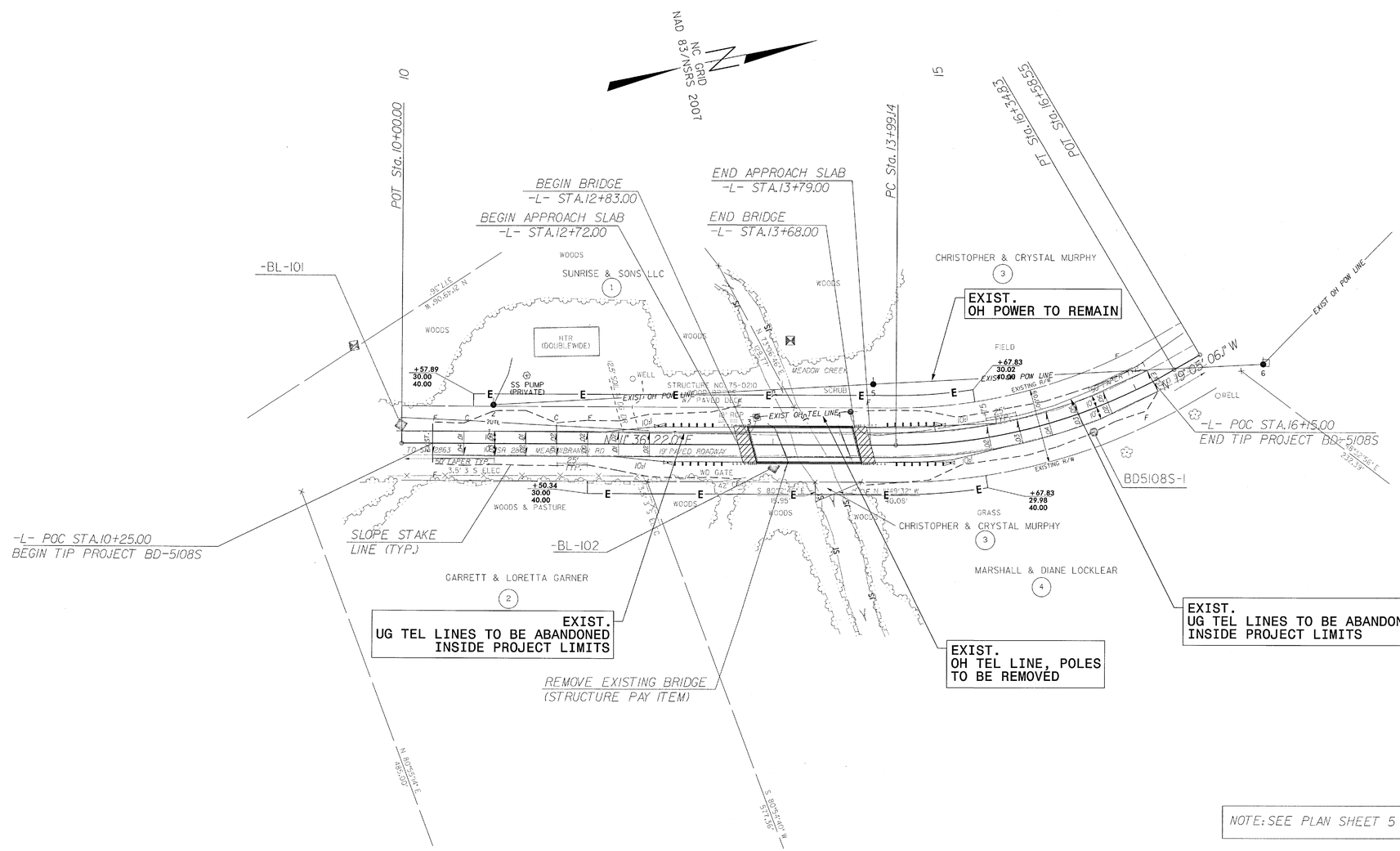

NOTE: SEE PLAN SHEET 5 FOR PROFILE

REVISIONS

24-FEB-2012 16:38
Y:\Projects\NCDOT\Division On-Call SEPI\BD-5108S - Randolph\Utilities\bd5108S_RDY_pshU002.dgn
CNewsome AT RALEWCNEWSOME