NORTH CAROLINA DEPARTMENT OF TRANSPORTATION

DIVISION 8 OFFICE BUILDING

RENDERING IS ILLUSTRATIVE AND MAY NOT ACCURATELY DEPICT THE AESTHETICS OF THE FINAL CONSTRUCTION AND MATERIALS

OWNER:

NORTH CAROLINA
DEPARTMENT OF TRANSPORTATION
TRANSPORTATION BUILDING
1 SOUTH WILMINGTON STREET
RALEIGH, NORTH CAROLINA 27601

CONTACT:
STERLING BAKER, PE
T.252.482.1850
F.919.715.0399
C.252.339.5964
sbaker@ncdot.gov

ARCHITECT:

ANDRE JOHNSON ARCHITECT
PO BOX 14637
RALEIGH, NORTH CAROLINA 27620

CONTACT:
ANDRE L. JOHNSON, AIA, NCARB
T.919.661.6935
F.919.662.2589
C.919.815.8753
andre@andrejohnsonarchitect.com

CIVIL:

PEAK ENGINEERING AND DESIGN, INC.
5448 APEX PEAKWAY
APEX, NORTH CAROLINA 27502

CONTACT:
DANIEL H. WOODS, PE
T.919.439.0100
F.919.741.4545
dwoods@peakengineeringdesign.com

STRUCTURAL:

STEWART, INC.
421 FAYETTEVILLE STREET
SUITE 400
RALEIGH, NORTH CAROLINA 27601

CONTACT:
CHARLES P. LEWIS, PE
T.919.380.8750
F.919.380.8752
clewis@stewartinc.com

MEP ENGINEERS:

RMF ENGINEERING, INC.
8081 ARCO CORPORATE DRIVE
SUITE 300
RALEIGH, NORTH CAROLINA 27617

CONTACT:
BLAKE SMITH, PE
T.919.941.9876
F.919.941.9957
blake.smith@rmf.com

LANDSCAPE ARCHITECT:

STEWART, INC.
421 FAYETTEVILLE STREET
SUITE 400
RALEIGH, NORTH CAROLINA 27601

CONTACT:
MIKE TARRANT, PLA, ASLA
T.919.380-8750
F.919.380.8752
mtarrant@stewartinc.com

CLIENT AND PROJECT

NORTH CAROLINA
DEPARTMENT OF
TRANSPORTATION

SCO ID NO.: 14-11006-01A

NEW DIVISION 8 OFFICE BUILDING

150 DOT DRIVE
CARTHAGE, NC 28327

DESIGNER

ANDRE JOHNSON ARCHITECT

PO BOX 14637
RALEIGH, NORTH CAROLINA 27620
TELEPHONE: 919.661.6935
MAIL: info@andrejohnsonarchitect.com

PROJECT NO:	P1423.00
DATE:	AUGUST 5, 2016

BID DOCUMENTS

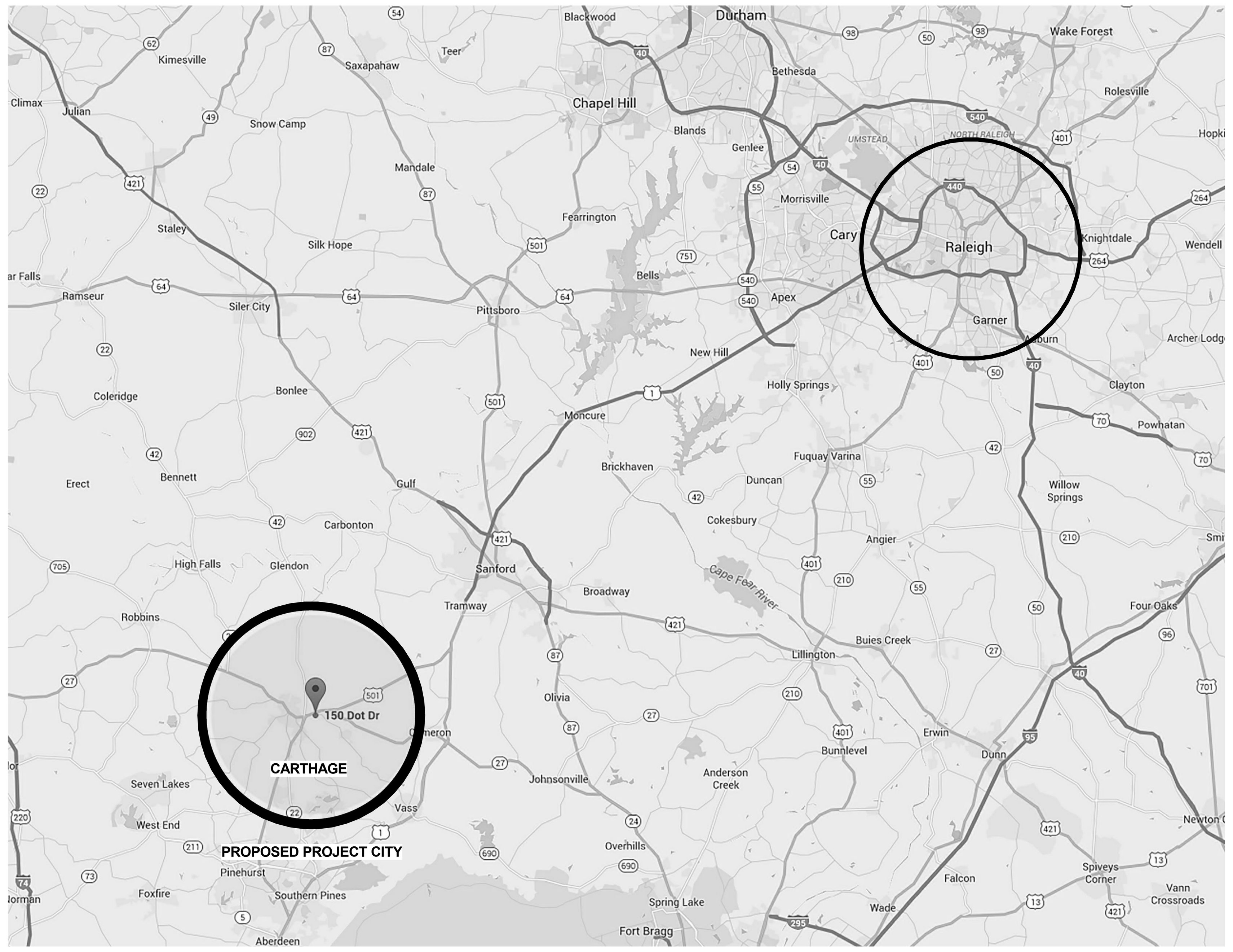

LOCATION MAP

PLAN NORTH

VICINITY MAP

PLAN NORTH

PROJECT LOCATION:
150 DOT DRIVE
CARTHAGE, NORTH CAROLINA 28327

GENERAL

G001 COVER SHEET
G002 SHEET LIST & ARCHITECTURAL SYMBOLS
G003 BUILDING CODE SUMMARY
G101 LIFE SAFETY PLAN

CIVIL

C001 EXISTING CONDITIONS AND DEMOLITION
C100 SITE PLAN
C200 UTILITY PLAN
C300 GRADING AND DRAINAGE PLAN
C400 EROSION CONTROL PLAN
C500 DETAILS
C501 DETAILS
C502 DETAILS

LANDSCAPE ARCHITECTURE

L001 LANDSCAPE PLAN
L002 PLANTING DETAILS

STRUCTURAL

S000 GENERAL NOTES
S001 ABBREVIATIONS
S101 FOUNDATION PLAN
S102 ROOF FRAMING PLAN
S200 FOUNDATION SECTIONS & DETAILS
S201 FOUNDATION SECTIONS & DETAILS
S300 ROOF FRAMING SECTIONS & DETAILS
S301 ROOF FRAMING SECTIONS & DETAILS
S400 TYPICAL MASONRY DETAILS

ARCHITECTURAL

A001 ARCHITECTURAL SITE PLAN
A101 FLOOR PLAN
A102 ROOF PLAN
A131 REFLECTED CEILING PLAN
A141 FLOOR FINISH PLAN & FINISH SCHEDULE
A151 EQUIPMENT FLOOR PLAN
A200 BUILDING ELEVATIONS
A300 BUILDING SECTIONS
A310 WALL SECTIONS
A311 WALL SECTIONS
A312 WALL SECTIONS
A400 ENLARGED TOILET ROOM PLANS & ELEVATIONS
A401 TOILET ROOM SINK DETAILS & RECEPTION DESK DETAILS
A410 INTERIOR ELEVATIONS
A411 INTERIOR ELEVATIONS
A412 CASEWORK ELEVATIONS
A413 CASEWORK DETAILS
A500 EXTERIOR ASSEMBLY TYPES
A501 PARTITION TYPES
A502 TYPICAL ROOF CONSTRUCTION DETAILS
A503 CEILING DETAILS
A504 TYPICAL CONSTRUCTION DETAILS & CONSTRUCTION SIGN
A505 CONSTRUCTION MOCK UP
A510 EXTERIOR PLAN DETAILS
A511 EXTERIOR PLAN DETAILS
A512 EXTERIOR PLAN DETAILS
A513 INTERIOR PLAN DETAILS
A520 EXTERIOR SECTION DETAILS
A521 EXTERIOR SECTION DETAILS
A522 EXTERIOR SECTION DETAILS
A530 ENLARGED TYPICAL JAMB DETAILS
A531 ENLARGED TYPICAL JAMB DETAILS
A540 ENLARGED HEAD DETAILS
A600 DOOR & FRAME ELEVATION, DETAILS & SCHEDULE
A601 CURTAINWALL & LOUVER FRAME ELEVATIONS
A700 INTERIOR SIGNAGE DRAWINGS & SCHEDULE
A900 3D EXTERIOR REFERENCE VIEWS

PLUMBING

P001 PLUMBING NOTES, SYMBOLS AND ABBREVIATIONS
P101 DOMESTIC WATER
P201 SANITARY STORM AND VENT UNDERSLAB
P202 SANITARY AND STORM
P203 SANITARY AND STORM ROOF
P400 RESTROOM ENLARGED PLANS
P401 BREAKROOM & MECHANICAL ROOM ENLARGED PLANS
P500 PLUMBING RISER DIAGRAM - DOMESTIC WATER
P501 PLUMBING RISER DIAGRAM - SANITARY AND VENT
P502 PLUMBING RISER DIAGRAM - STORM DRAIN
P700 PLUMBING DETAILS
P701 PLUMBING DETAILS
P800 PLUMBING SCHEDULES

MECHANICAL

M001 MECHANICAL NOTES, SYMBOLS AND ABBREVIATIONS
M002 MECHANICAL NOTES, SYMBOLS AND ABBREVIATIONS
M101 FLOOR LEVEL - DUCTWORK
M102 ROOF LEVEL - DUCTWORK
M400 MECHANICAL ENLARGED PLAN
M500 MECHANICAL SCHEMATICS
M600 MECHANICAL SECTIONS
M700 MECHANICAL DETAILS
M701 MECHANICAL DETAILS
M702 MECHANICAL DETAILS
M800 MECHANICAL SCHEDULES
M801 MECHANICAL SCHEDULES

ELECTRICAL

E001 ELECTRICAL NOTES AND SYMBOLS LEGEND
E002 ELECTRICAL GENERAL NOTES AND ABBREVIATIONS
E003 ELECTRICAL SITE PLAN
E101 ELECTRICAL POWER PLAN
E102 ELECTRICAL POWER ROOF PLAN
E201 ELECTRICAL LIGHTING PLAN
E301 ELECTRICAL FIRE ALARM PLAN
E311 ELECTRICAL SPECIAL SYSTEMS PLAN
E401 ELECTRICAL ENLARGED PLANS
E501 ELECTRICAL DETAILS
E502 ELECTRICAL DETAILS
E503 ELECTRICAL DETAILS
E504 ELECTRICAL DETAILS
E505 ELECTRICAL DETAILS
E506 ELECTRICAL DETAILS
E507 ELECTRICAL DETAILS
E508 ELECTRICAL DETAILS
E509 TELECOM DETAILS
E601 ELECTRICAL SINGLE LINE DIAGRAM
E602 FIRE ALARM RISER DIAGRAM
E603 TELECOMMUNICATIONS RISER DIAGRAM
E701 ELECTRICAL LIGHTING FIXTURE SCHEDULE
E702 ELECTRICAL MOTOR AND EQUIPMENT SCHEDULE
E801 ELECTRICAL PANEL SCHEDULES
E802 ELECTRICAL PANEL SCHEDULES
E803 ELECTRICAL PANEL SCHEDULES

GENERAL NOTES

1. THESE SYMBOLS AND ANY ABBREVIATIONS SHOWN ON THIS SHEET REFER TO ARCHITECTURAL SHEETS ONLY.
2. THESE NOTES, SYMBOLS AND ABBREVIATIONS AND LEGENDS ARE TYPICAL ARCHITECTURAL STANDARDS. THESE SYMBOLS AND ABBREVIATIONS ARE NOT TO BE MISCONSTRUED AS THE DEFINITIVE SYMBOLS, ABBREVIATIONS AND LEGENDS. CONTRACTOR SHALL REFER TO THE INDIVIDUAL SHEETS AND SHALL ONLY APPLY TO THE ARCHITECTURAL SHEETS AS STATED IN NOTE 1 ABOVE.
3. REFER TO THE CURRENT ADDITION OF THE MEANS ILLUSTRATED CONSTRUCTION DICTIONARY FOR ADDITIONAL SYMBOLS, ABBREVIATIONS AND LEGENDS.

SYMBOLS

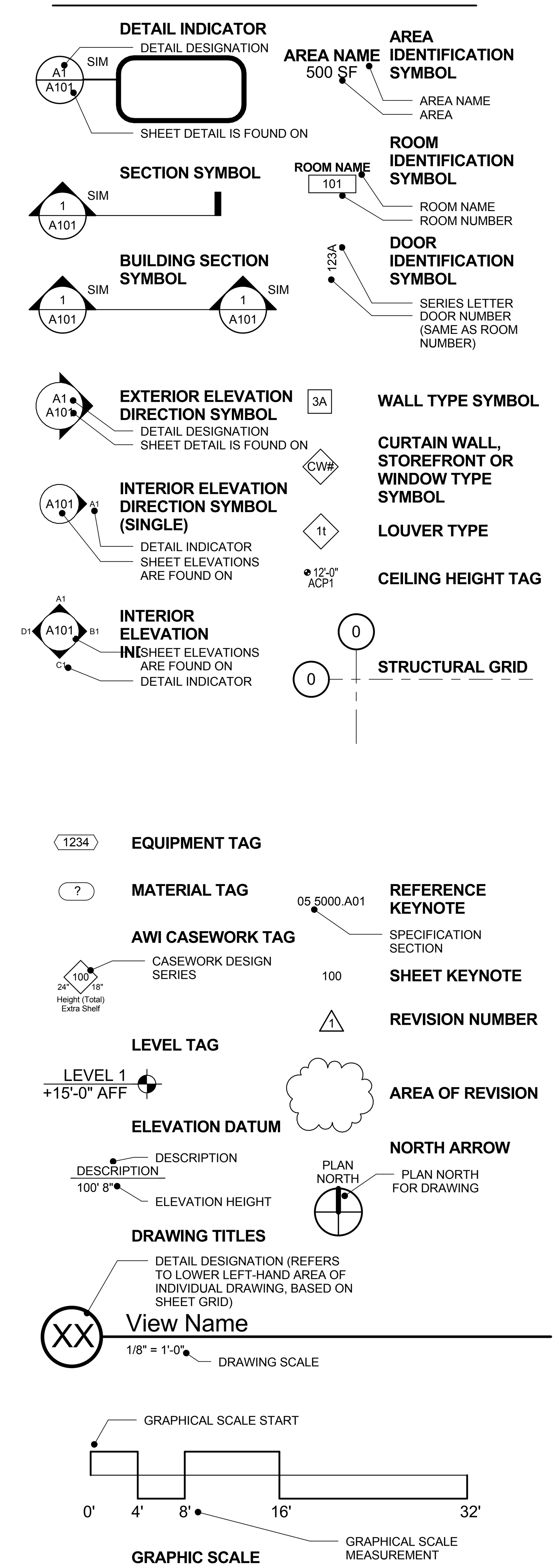

CLIENT AND PROJECT

NORTH CAROLINA DEPARTMENT OF TRANSPORTATION

SCO ID NO.: 14-11006-01A

NEW DIVISION 8 OFFICE BUILDING
150 DOT DRIVE
CARTHAGE, NC 28327

DESIGNER

ANDRE JOHNSON ARCHITECT

PO BOX 14637
RALEIGH, NORTH CAROLINA 27620
TELEPHONE: 919.661.6935
MAIL: info@andrejohnsonarchitect.com

© 2016 Andre Johnson Architect, PLLC
Duplication or reproduction by any means without the express written consent of Andre L. Johnson, Architect is a violation of Federal and international law. The information contained on this document is the intellectual property of Andre L. Johnson, Architect and all rights thereto are Reserved. For exceptions, refer to the Owner-Architect Agreement.

CONSULTANT

REGISTRATION

ANDRE JOHNSON ARCHITECT, PLLC — REGISTERED ARCHITECTURAL CORPORATION 52876 — NORTH CAROLINA — RALEIGH, NC

ANDRE LAMAR JOHNSON — REGISTERED ARCHITECT 10528 — NORTH CAROLINA — RALEIGH, NC

08/05/16

ISSUE

No.	Date	Description

SHEET INFO

SHEET LIST & ARCHITECTURAL SYMBOLS

G002

PROJECT NO: P1423.00
DATE: AUGUST 5, 2016
BID DOCUMENTS

2012 APPENDIX B
BUILDING CODE SUMMARY
FOR ALL COMMERCIAL PROJECTS

(EXCEPT 1 AND 2-FAMILY DWELLINGS AND TOWNHOUSES)
Reproduce the following data on the building plans sheet 1 or 2

Name of Project: NORTH CAROLINA DEPARTMENT OF TRANSPORTATION DIVISION 8 OFFICE BUILDING
Address: 150 DOT DRIVE CARTHAGE, NORTH CAROLINA Zip Code: 28327
Proposed Use: BUSINESS (B) OFFICE BUILDING
Owner or Authorized Agent: STERLING BAKER Phone #: 919.707.4552
E-Mail: SBAKER@NCDOT.GOV Fax #: 919.715.0399

Owned By: ☐ City/County ☐ Private ☒ State
Code Enforcement Jurisdiction: ☐ City _____ ☐ County _____ ☒ State

LEAD DESIGN PROFESSIONAL: ANDRE L. JOHNSON. AIA, NCARB

Designer	Firm	Name	License #	Phone #
Architectural	ANDRE JOHNSON ARCHITECT	ANDRE L. JOHNSON	NC 10528	919.661.6935
Civil	PEAK ENGINEERING & DESIGN	JEFF ROACH, PE	NC 24427	919.439.0100
Electrical	RMF ENGINEERING	DAVID FALCINELLI	NC 040879	919.941.9876
Fire Alarm	RMF ENGINEERING	DAVID FALCINELLI	NC 040879	
Plumbing	RMF ENGINEERING	BLAKE SMITH	NC 041471	
Mechanical	RMF ENGINEERING	BLAKE SMITH	NC 041471	919.941.9876
Sprinkler-Standpipe	RMF ENGINEERING	BLAKE SMITH	NC 041471	919.941.9876
Structural	STEWART, INC	CHARLES LEWIS	NC 025934	919.380.8750
Retaining Walls > 5'	STEWART, INC	CHARLES LEWIS	NC 025934	919.380.8750
Other LANDSCAPE	STEWART, INC.	MICHAEL TARRANT	NC 1664	919.380.8750

2012 EDITION OF NC CODE FOR: ☒ New Construction ☐ Addition ☐ Upfit
EXISTING: ☐ Reconstruction ☐ Alteration ☐ Repair ☐ Renovation
CONSTRUCTED: (date)_____ ORIGINAL USE: (Ch.3)_____
RENOVATED: (date)_____ CURRENT USE: (Ch.3)_____
PROPOSED USE: (Ch.3)_____

BASIC BUILDING DATA

Construction Type: ☐ I-A ☐ II-A ☐ III-A ☐ IV ☐ V-A
Check all that apply ☐ I-B ☒ II-B ☐ III-B ☐ ☐ V-B

Sprinklers: ☒ No ☐ Yes ☐ Partial ☐ NFPA 13 ☐ NFPA 13R ☐ NFPA 13D
Standpipes: ☒ No ☐ Yes ☐ Class I ☐ Class II ☐ Class III ☐ Wet ☐ Dry
Fire District: ☒ No ☐ Yes (Primary) Flood Hazard Area ☒ No ☐ Yes
Building Height: Feet 16'-0"

Gross Building Area:

FLOOR	EXISTING (SQ FT)	NEW (SQ FT)	SUB-TOTAL
Basement			
Ground Floor		10,842	
Mezzanine			
2nd Floor			
3rd Floor			
4th Floor			
5th Floor			
6th Floor			
TOTAL	10,842		

ALLOWABLE AREA

Occupancy:
Assembly: ☐ A-1 ☐ A-2 ☐ A-3 ☐ A-4 ☐ A-5
Business ☒
Educational ☐
Factory-Industrial: ☐ F-1(Moderate) ☐ F-2 (Low)
Hazardous: ☐ H-1 Detonate ☐ H-2 Deflagrate ☐ H-3 Combust ☐ H-4 Health ☐ H-5 HPM
Institutional: ☐ I-1 ☐ I-2 ☐ I-3 ☐ I-4
I-3 Condition: ☐ 1 ☐ 2 ☐ 3 ☐ 4 ☐ 5
Mercantile ☐
Residential: ☐ R-1 ☐ R-2 ☐ R-3 ☐ R-4
Storage: ☐ S-1 Moderate ☐ S-2 Low ☐ High-Piled
Parking Garage: ☐ Open ☐ Enclosed ☐ Repair Garage
Utility and Miscellaneous ☐

Accessory Occupancies:
Assembly: ☐ A-1 ☐ A-2 ☐ A-3 ☐ A-4 ☐ A-5
Business ☐
Educational ☐
Factory-Industrial: ☐ F-1(Moderate) ☐ F-2 (Low)
Hazardous: ☐ H-1 Detonate ☐ H-2 Deflagrate ☐ H-3 Combust ☐ H-4 Health ☐ H-5 HPM
Institutional: ☐ I-1 ☐ I-2 ☐ I-3 ☐ I-4
I-3 Condition: ☐ 1 ☐ 2 ☐ 3 ☐ 4 ☐ 5
Mercantile ☐
Residential: ☐ R-1 ☐ R-2 ☐ R-3 ☐ R-4
Storage: ☐ S-1 Moderate ☒ S-2 Low ☐ High-Piled
Parking Garage: ☐ Open ☐ Enclosed ☐ Repair Garage
Utility and Miscellaneous ☐

Incidental Uses (Table 508.2.5):

☐ Furnace room where any piece of equipment is over 400,000 Btu per hour input
☐ Rooms with boilers where the largest piece of equipment is over 15 psi and 10 horsepower
☐ Refrigerant machine room
☐ Hydrogen cutoff rooms, not classified as Group H
☐ Incinerator rooms
☐ Paint shops, not classified as Group H, located in occupancies other than Group F
☐ Laboratories and vocational shops, not classified as Group H. located in a Group E or I-2 occupancy
☐ Laundry rooms over 100 square feet
☐ Group I-3 cells equipped with padded surfaces
☐ Group I-2 waste and linen collection rooms
☐ Waste and linen collection rooms over 100 square feet
☐ Stationary storage battery systems having a liquid electrolyte capacity of more than 50 gallons, or a lithium-ion capacity of 1,000 pounds used for facility standby power, emergency power or uninterrupted power supplies
☐ Rooms containing fire pumps
☐ Group I-2 storage rooms over 100 square feet
☐ Group I-2 commercial kitchens
☐ Group I-2 laundries equal to or less than 100 square feet
☐ Group I-2 rooms or spaces that contain fuel-fired heating equipment

Special Uses: ☐ 402 ☐ 403 ☐ 404 ☐ 405 ☐ 406 ☐ 407 ☐ 408 ☐ 409 ☐ 410 ☐ 411 ☐ 412 ☐ 413 ☐ 414 ☐ 415 ☐ 416 ☐ 417 ☐ 418 ☐ 419 ☐ 420 ☐ 421 ☐ 422 ☐ 423 ☐ 424 ☐ 425 ☐ 426 ☐ 427

Special Provisions: ☐ 509.2 ☐ 509.3 ☐ 509.4 ☐ 509.5 ☐ 509.6 ☐ 509.7 ☐ 509.8 ☐ 509.9

Mixed Occupancy: ☒ No ☐ Yes Separation: _____ Hr.Exception: _____
☐ Incidental Use Separation (508.2.5)
This separation is not exempt as a Non-Separated Use (see exceptions).
☐ Non-Separated Use (508.3)
The required type of construction for the building shall be determined by applying the height and area limitations for each of the applicable occupancies to the entire building. The most restrictive type of construction, so determined, shall apply to the entire building.
☐ Separated Use (508.4) - See below for area calculations
For each story, the area of the occupancy shall be such that the sum of the ratios of the actual floor area of each use divided by the allowable floor area for each use shall not exceed 1.

$$\frac{\text{Actual Area of Occupancy A}}{\text{Allowable Area of Occupancy A}} + \frac{\text{Actual Area of Occupancy B}}{\text{Allowable Area of Occupancy B}} \leq 1$$

$$\frac{876}{1{,}100} + \frac{0}{0} = 0.79 \leq 1$$

STORY NO.	DESCRIPTION AND USE	(A) BLDG AREA PER STORY (ACTUAL)	(B) TABLE 503 [3] AREA	(C) AREA FOR FRONTAGE INCREASE [1]	(D) AREA FOR SPRINKLER INCREASE [2]	(E) ALLOWABLE FLOOR AREA OR UNLIMITED [3]	(F) MAXIMUM BUILDING AREA [4]
1	BUSINESS (B)	10,842	23,000	17,250	0	40,250	40,250

1 Frontage area increases from Section 506.2 are computed thus:
a. Perimeter which fronts a public way or open space having 20 feet minimum width = 492 ft (F)
b. Total Building Perimeter = 492 ft (P)
c. Ratio (F/P) = 1 (F/P)
d. W = Minimum width of public way = 30 ft (W)
e. Percent of frontage increase If = 100 [(F/P) - 0.25] x W/30 = 75 ft (%)

2 The sprinkler increase per Section 506.3 is as follows:
a. Multi-story building I = 200%
b. Single story building S = 300%

3 Unlimited area applicable under conditions of Sections 507

4 Maximum Building Area = total number of stories in the building x E (506.4)

5 The Maximum area of parking garages must comply with 406.3.5. The maximum area of traffic control towers must comply with 412.1.2.

ALLOWABLE HEIGHT

	ALLOWABLE HEIGHT (TABLE 503)	INCREASE FOR SPRINKLERS	SHOWN ON PLANS	CODE REFERENCE
Type of Construction	TYPE = II-B		TYPE = II-B	TABLE 601
Building Height in Feet	H = 55'-0" ft	H + 20 ft = 0 ft	H = 16'-0" ft	TABLE 503
Building Height in Stories	S = 2	S + 1 = 0	S = 1	TABLE 503

FIRE PROTECTION REQUIREMENTS

THIS SECTION REQUIRED FOR ALL PROJECTS

Life Safety Plan Sheet #, if Provided: _____

BUILDING ELEMENT	FIRE SEPARATION DISTANCE (FEET)	RATING REQ'D*	RATING PROVIDED (W/_____HR* REDUCTION)	DETAIL # AND SHEET #	DESIGN # FOR RATED ASSEMBLY	DESIGN # FOR RATED PENETRATION	DESIGN # FOR RATED JOINTS
Structural Frame Including Columns, Girders, Trusses		0	0				
Bearing Walls		NA	NA				
Exterior							
North							
East							
West							
South							
Interior							
Nonbearing Walls and Partitions							
Exterior		0	0				
North		0	0				
East		0	0				
West		0	0				
South		0	0				
Interior		0	0				
Floor Construction Including Supporting Beams and Joists		0	0				
Floor Ceiling Assembly		0	0				
Columns Supporting Floors		0	0				
Roof Construction Including Supporting Beams and Joists**		0	0				
Roof Ceiling Assembly		0	0				
Columns Supporting Roof		0	0				
Shaft Enclosures - Exit		NA	NA				
Shaft Enclosures - Other		NA	NA				
Corridor Separation		0	0				
Occupancy Separation		0	0				
Party/Fire Wall Separation		NA	NA				
Smoke Barrier Separation Tenant Separation		NA	NA				
Incidental Use Separation		NA	NA				

* Indicate section number permitting reduction

LIFE SAFETY SYSTEM

THIS SECTION REQUIRED FOR ALL PROJECTS

Emergency Lighting: ☐ No ☒ Yes
Exit Signs: ☐ No ☒ Yes
Fire Alarm: ☐ No ☒ Yes
Smoke Detection Systems: ☐ No ☒ Yes ☐ Partial
Panic Hardware: ☒ No ☐ Yes

LIFE SAFETYPLAN REQUIREMENTS

Life Safety Plan Sheet #: G-101

☐ Fire and/or smoke rated wall locations (Chapter 7)
☐ Assumed and real property line locations
☐ Exterior wall opening area with respect to distance to assumed property lines (705.8)
☐ Existing structures within 30' of the proposed building
☒ Occupancy types for each area as it relates to occupant load calculation (Table 1004.1.1)
☒ Occupant loads for each area
☒ Exit access travel distances (1016)
☒ Common path of travel distances (1014.3 & 1028.8)
☒ Dead end lengths (1018.4)
☒ Clear exit widths for each exit door
☒ Maximum calculated occupant load capacity each exit door can accommodate based on egress width (1005.1)
☒ Actual occupant load for each exit door
☐ A separate schematic plan indicating where fire rated floor/ceiling and/or roof structure is provided for purposes of occupancy separation
☐ Location of doors with panic hardware (1008.1.10)
☐ Location of doors with delayed egress locks and the amount of delay (1008.1.9.7)
☐ Location of doors with electromagnetic egress locks (1008.1.9.8)
☐ Location of doors equipped with hold-open devices
☐ Location of emergency escape windows (1029)
☐ The square footage of each fire area (902)
☐ The square footage of each smoke compartment (407.4)
☒ Note any code exceptions or table notes that may have been utilized regarding the items above

ACCESSIBLE DWELLING UNITS (SECTION 1107)

TOTAL UNITS	ACCESSIBLE UNITS REQUIRED	ACCESSIBLE UNITS PROVIDED	TYPE A UNITS REQUIRED	TYPE A UNITS PROVIDED	TYPE B UNITS REQUIRED	TYPE B UNITS PROVIDED	TOTAL ACCESSIBLE UNITS PROVIDED

DOES NOT APPLY TO THIS PROJECT

ACCESSIBLE PARKING (SECTION 1106)

LOT OR PARKING AREA	TOTAL # OF PARKING SPACES		# OF ACCESSIBLE SPACES PROVIDED			TOTAL # ACCESSIBLE PROVIDED
	REQUIRED	PROVIDED	REGULAR WITH 5' ACCESS AISLE	VAN SPACE 132" ACCESS AISLE	VAN SPACE 8' ACCESS AISLE	
1	37	67	2	0	2	4
TOTAL		67	2	0	2	4

STRUCTURAL DESIGN LOADS

DESIGN LOADS:

Importance Factors: Wind (IW) 1.0; Snow (IS) 1.0; Seismic (IE) 1.0

Live Loads: Roof 20 psf; Mezzanine NA psf; Floor 100 psf

Ground Snow Load: 15 psf

Wind Load: Basic Wind Speed 95 mph (ASCE-7)
Exposure Category B
Wind Base Shears (for MWFRS) Vx = 12.0k Vy = 29.0k

SEISMIC DESIGN CATEGORY: ☐ A ☐ B ☒ C ☐ D

Provide the following Seismic Design Parameters:

Occupancy Category (Table 1604.5) ☐ I ☒ II ☐ III ☐ IV

Spectral Response Acceleration SS 20.9 %g S1 9.5 %g

Site Classification (Table 1613.5.2) ☐ A ☐ B ☐ C ☒ D ☐ E ☐ F
Data Source: ☒ Field Test ☐ Presumptive ☐ Historical Data

Basic structural system (check one)
☐ Bearing Wall ☐ Dual w/Special Moment Frame
☐ Building Frame ☐ Dual w/Intermediate R/C or Special Steel
☒ Moment Frame ☐ Inverted Pendulum

Seismic base shear: VX = 30.1k VY = 30.1k

Analysis Procedure: ☐ Simplified ☒ Equivalent Lateral Force ☐ Dynamic

Architectural, Mechanical, Components anchored? ☒ Yes ☐ No

Lateral design Control: ☒ Earthquake ☐ Wind

Soil Bearing Capacities:
Field Test (provide copy of test report) 3,000 psf
Presumptive Bearing capacity _____ psf
Pile size, type, and capacity _____

SPECIAL INSPECTIONS REQUIRED: ☐ Yes ☒ No

PLUMBING FIXTURE REQUIREMENTS (TABLE 2902.1)

USE	WATER CLOSETS MALE	WATER CLOSETS FEMALE	URINALS	LAVATORIES MALE	LAVATORIES FEMALE	SHOWERS /TUBS	DRINKING FOUNTAINS REGULAR	DRINKING FOUNTAINS ACCESSIBLE
EXISTING								
NEW	2	3	1	2	2	2	1	1
REQUIRED	2	3	1	2	2	0	1	1

SPECIAL APPROVALS

(Local Jurisdiction, Department of Insurance, OSC, DPI, DHHS, ICC, etc., describe below.)

NONE REQUIRED

ENERGY SUMMARY

ENERGY REQUIREMENTS:
The following data shall be considered minimum and any special attribute required to meet the energy code shall also be provided. Each Designer shall furnish the required portions of the project information for the plan data sheet. If performance method, state the annual energy cost for the standard reference design vs annual energy cost for the proposed design.

Climate Zone:
☒ 3 ☐ 4 ☐ 5

Method of Compliance:
☒ Prescriptive (Energy Code)
☐ Performance (Energy Code)
☐ Prescriptive (Ashrae 90.1)
☐ Performance (Ashrae 90.1)

THERMAL ENVELOPE

Roof/Ceiling Assembly (each assembly)
Description of assembly: 2 PLY SBS BUILT UP ROOF OVER TAPERED INSULATION
U-Value of total assembly: 0.033
R-Value of insulation: 28.5 (R=5.7 PER INCH @ 5")
Skylights in each assembly: NA
U-Value of each skylight: NA
Total square footage of skylights in each assembly: NA

Exterior Walls (each assembly)
Description of assembly: BRICK VENEER, 2.5" RIGID INSULATION, METAL STUDS 2.5" MINERAL WOOL INSULATION 5/8" INTERIOR GWB
U-Value of total assembly: 0.40
R-Value of insulation: 16.25 CI (R=6.5 PER INCH @ 2.5") + 9.6 (R=3.85 PER INCH @ 2.5")
Openings (windows or doors with glazing)
U-Value of assembly: 0.29 WINTER, 0.27 SUMMER
Shading coefficient: 0.34
Projection factor: 1
Low-E required if applicable: PROVIDED
Door R-Values: 0.27

Exterior Walls (each assembly)
Description of assembly: PHENOLIC PANEL, 2.5" RIGID INSULATION, METAL STUDS 2.5" MINERAL WOOL INSULATION 5/8" INTERIOR GWB
U-Value of total assembly: 0.45
R-Value of insulation: 16.25 CI (R=6.5 PER INCH @ 2.5") + 9.6 (R=3.85 PER INCH @ 2.5")
Openings (windows or doors with glazing)
U-Value of assembly: 0.29 WINTER, 0.27 SUMMER
Shading coefficient: 0.34
Projection factor: 1
Low-E required if applicable: PROVIDED
Door R-Values: 0.27

Exterior Walls (each assembly)
Description of assembly: NON-INSULATED METAL WALL PANEL, 2.5" RIGID INSULATION METAL STUDS, 2.5" MINERAL WOOL INSULATION 5/8" INTERIOR GWB
U-Value of total assembly: 0.43
R-Value of insulation: 16.25 CI (R=6.5 PER INCH @ 2.5") + 9.6 (R=3.85 PER INCH @ 2.5")
Openings (windows or doors with glazing)
U-Value of assembly: 0.29 WINTER, 0.27 SUMMER
Shading coefficient: 0.34
Projection factor: 1
Low-E required if applicable: PROVIDED
Door R-Values: 0.27

Walls Adjacent to Unconditioned Space (each assembly)
Description of assembly: NA
U-Value of total assembly: NA
R-Value of insulation: NA
Openings (windows or doors with glazing)
U-Value of assembly: NA
Low-E required if applicable: NA
Door R-Values: NA

Walls Below Grade (each assembly)
Description of assembly: NA
U-Value of total assembly: NA
R-Value of insulation: NA

Floors Over Unconditioned Space (each assembly)
Description of assembly: NA
U-Value of total assembly: NA
R-Value of insulation: NA

Floor Slab on Grade (each assembly)
Description of assembly: 4" CAST IN PLACE CONCRETE SLAB ON GRADE CONTINUOUS VAPOR BARRIER
U-Value of total assembly: 3.4
R-Value of insulation: R=15.0 VERTICAL @ PERIMETER
Horizontal / Vertical Requirement: R=15.0 FOR 24"
Slab Heated: NA

MECHANICAL SUMMARY

MECHANICAL SYSTEMS, SERVICE SYSTEMS, AND EQUIPMENT

Thermal Zone
Winter Dry Bulb: 22.2 DEGREES (F)
Summer Dry Bulb: 96.5 DEGREES (F)

Interior Design Conditions
Winter Dry Bulb: 70 DEGREES (F)
Summer Dry Bulb: 75 DEGREES (F)
Relative Humidity: 50%

Building Heating Load: REFER TO MECHANICAL SCHEDULES ON SHEET M801
Building Cooling Load

Mechanical Spacing Conditioning System
Unitary
Description of Unit: CENTRAL AHU WITH DX COOLING AND FAN POWERED VAV BOXES WITH ELECTRIC HEAT
Heating Efficiency: SEE MECHANICAL SCHEDULES
Cooling Efficiency: SEE MECHANICAL SCHEDULES
Heat Output of Unit: SEE MECHANICAL SCHEDULES
Cooling Output of Unit: SEE MECHANICAL SCHEDULES

Boiler
Size Category: NA
If Oversized, State Reason

Chiller
Size Category: NA
If Oversized, State Reason

List Equipment Efficiencies

ELECTRICAL SUMMARY

ELECTRICAL SYSTEM AND EQUIPMENT

Method of Compliance:
Energy Code: ☒ Prescriptive ☐ Performance
Ashrae 90.1: ☒ Prescriptive ☐ Performance

Lighting Schedule
Lamp type required in fixture: SEE LIGHTING FIXTURE SCHEDULE
Number of lamps in fixture: SEE LIGHTING FIXTURE SCHEDULE
Ballast type used in fixture: SEE LIGHTING FIXTURE SCHEDULE
Number of ballasts in fixture: SEE LIGHTING FIXTURE SCHEDULE
Total wattage per fixture: SEE LIGHTING FIXTURE SCHEDULE
Total interior wattage specified vs. allowed: SPACE BY SPACE: 10,184W VS 10,506W
Total exterior wattage specified vs. allowed: 427W VS 651W

Additional Prescriptive Compliance

☒ 506.2.1 More Efficient Mechanical Equipment
☐ 506.2.2 Reduced Lighting Power Density
☐ 506.2.3 Energy Recovery Ventilation Systems
☐ 506.2.4 Higher Efficiency Service Water Heating
☐ 506.2.5 On-Site Supply of Renewable Energy
☐ 506.2.6 Automatic Daylighting Control Systems

CLIENT AND PROJECT

NORTH CAROLINA DEPARTMENT OF TRANSPORTATION

SCO ID NO.: 14-11006-01A

NEW DIVISION 8 OFFICE BUILDING

150 DOT DRIVE
CARTHAGE, NC 28327

DESIGNER

ANDRE JOHNSON ARCHITECT
PO BOX 14637
RALEIGH, NORTH CAROLINA 27620
TELEPHONE: 919.661.6935
MAIL: info@andrejohnsonarchitect.com

© 2016 Andre Johnson Architect, PLLC
Duplication or reproduction by any means without the express written consent of Andre L. Johnson, Architect is a violation of Federal and international law. The information contained on this document is the intellectual property of Andre L. Johnson, Architect and all rights thereto are Reserved. For exceptions, refer to the Owner-Architect Agreement.

CONSULTANT

REGISTRATION

ANDRE JOHNSON ARCHITECT, PLLC
ARCHITECTURAL CORPORATION
52876
NORTH CAROLINA
RALEIGH, NC

ANDRE LAMAR JOHNSON
SEAL 10528
NORTH CAROLINA
RALEIGH, NC
08/05/16

ISSUE

No.	Date	Description

SHEET INFO

BUILDING CODE SUMMARY

G003

PROJECT NO: P1423.00
DATE: AUGUST 5, 2016
BID DOCUMENTS

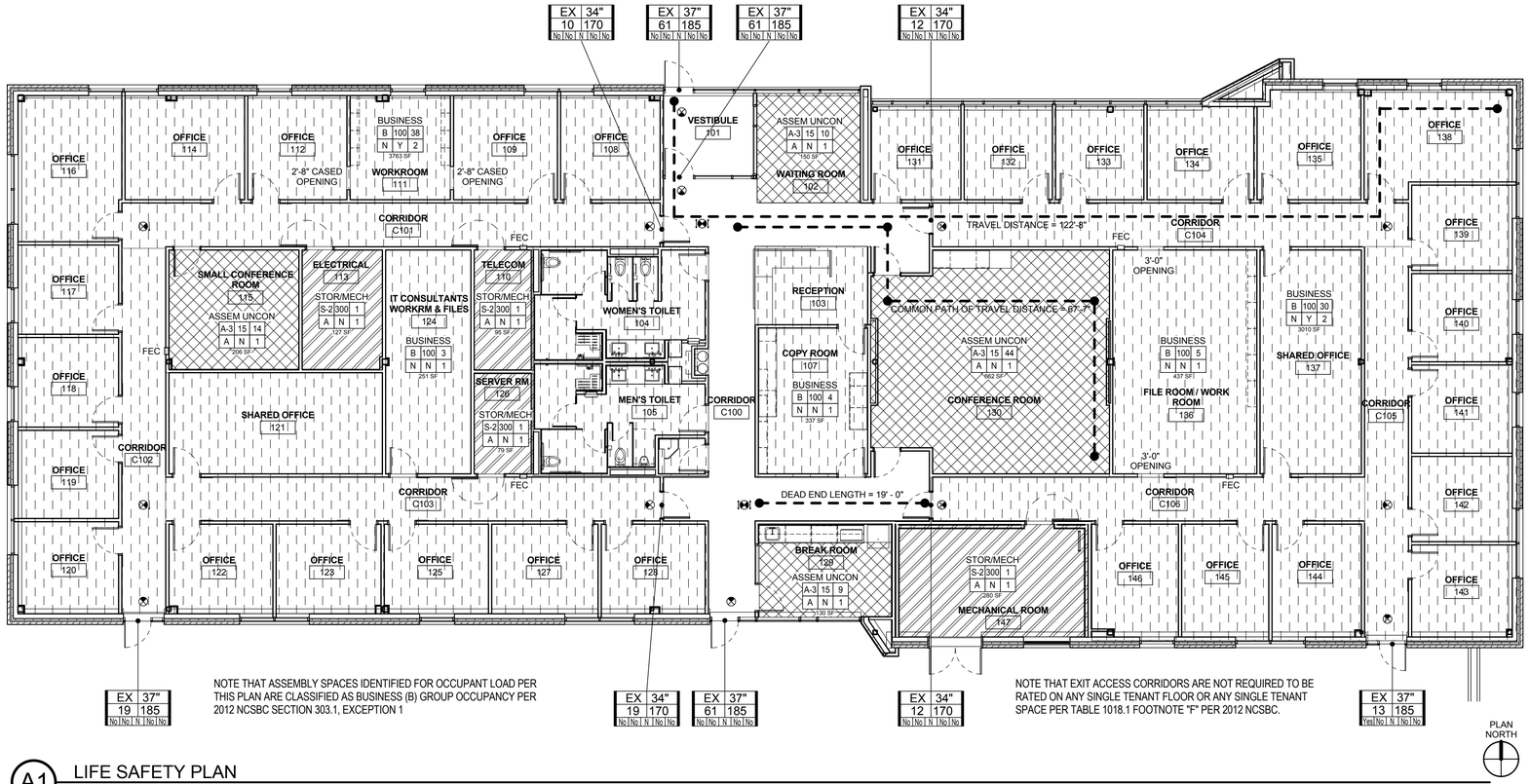

NOTE THAT ASSEMBLY SPACES IDENTIFIED FOR OCCUPANT LOAD PER THIS PLAN ARE CLASSIFIED AS BUSINESS (B) GROUP OCCUPANCY PER 2012 NCSBC SECTION 303.1, EXCEPTION 1

NOTE THAT EXIT ACCESS CORRIDORS ARE NOT REQUIRED TO BE RATED ON ANY SINGLE TENANT FLOOR OR ANY SINGLE TENANT SPACE PER TABLE 1018.1 FOOTNOTE "F" PER 2012 NCSBC.

A1 LIFE SAFETY PLAN

1/8" = 1'-0"

OCCUPANCY PER SPACE

ROOM NO.	ROOM NAME	AREA	OCCUPANCY TYPE	OCCUPANT LOAD FACTOR	NO. OF PERSONS
102	WAITING ROOM	150 SF	A3	15	10
103	RECEPTION	104 SF	B	100	1.1
104	WOMEN'S TOILET	219 SF	B	100	2.2
105	MEN'S TOILET	196 SF	B	100	2.0
106	JAN. CLO.	22 SF	B	100	0.2
107	COPY ROOM	209 SF	B	100	2.1
108	OFFICE	135 SF	B	100	1.4
109	OFFICE	142 SF	B	100	1.4
110	TELECOM	90 SF	S2	300	1
111	WORKROOM	136 SF	B	100	1.4
112	OFFICE	135 SF	B	100	1.4
113	ELECTRICAL	125 SF	S2	300	1
114	OFFICE	162 SF	B	100	1.7
115	SMALL CONFERENCE ROOM	206 SF	A3	15	14
116	OFFICE	197 SF	B	100	1.9
117	OFFICE	118 SF	B	100	1.2
118	OFFICE	117 SF	B	100	1.2
119	OFFICE	116 SF	B	100	1.2
120	OFFICE	121 SF	B	100	1.2
121	SHARED OFFICE	284 SF	B	100	2.9
122	OFFICE	121 SF	B	100	1.2
123	OFFICE	123 SF	B	100	1.2
124	IT CONSULTANTS WORKRM & FILES	250 SF	B	100	3
125	OFFICE	122 SF	B	100	1.2
126	SERVER RM	75 SF	S2	300	1
127	OFFICE	125 SF	B	100	1.2
128	OFFICE	121 SF	B	100	1.2
129	BREAK ROOM	130 SF	A3	15	9
130	CONFERENCE ROOM	662 SF	A3	15	44
131	OFFICE	110 SF	B	100	1.1
132	OFFICE	108 SF	B	100	1.1
133	OFFICE	108 SF	B	100	1.3
134	OFFICE	130 SF	B	100	1.2
135	OFFICE	147 SF	B	100	1.3
136	FILE ROOM / WORK ROOM	437 SF	B	100	5
137	SHARED OFFICE	298 SF	B	100	3
138	OFFICE	188 SF	B	100	1.8
139	OFFICE	112 SF	B	100	1.2
140	OFFICE	116 SF	B	100	1.2
141	OFFICE	116 SF	B	100	1.2
142	OFFICE	112 SF	B	100	1.2
143	OFFICE	121 SF	B	100	1.2
144	OFFICE	131 SF	B	100	1.3
145	OFFICE	129 SF	B	100	1.3
146	OFFICE	126 SF	B	100	1.3
147	MECHANICAL ROOM	265 SF	S2	300	1
C100	CORRIDOR	586 SF	B	100	5.8
C101	CORRIDOR	310 SF	B	100	3.1
C102	CORRIDOR	210 SF	B	100	2.1
C103	CORRIDOR	283 SF	B	100	2.9
C104	CORRIDOR	272 SF	B	100	2.7
C105	CORRIDOR	224 SF	B	100	2.3
C106	CORRIDOR	248 SF	B	100	2.5
Grand total: 53		9677 SF			
					166 OCCUPANTS

NOTE: THE TOTAL BUILDING AREA INDICATED IN THIS SCHEDULE DOES NOT REPRESENT THE TOTAL GROSS BUILDING SQUARE FOOTAGE. PLEASE REFER TO SHEET G002 IN THE APPENDIX B FOR THE TOTAL BUILDING SQUARE FOOTAGE.

NOTE: THE AREAS INDICATED ON THE OCCUPANCY SCHEDULE ARE PER ROOM AREA. THE LIFE SAFETY PLAN INDICATES AREAS FOR GROSS OCCUPANCY TYPES SUCH AS BUSINESS AND STORAGE / MECHANICAL AS A TOTAL GROSS NUMBER FOR THESE AREAS AS ALLOWED BY THE 2012 NORTH CAROLINA BUILDING CODE.

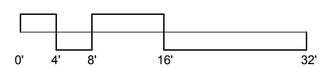

LIFE SAFETY LEGEND

EXIT SYMBOL WITH LIFE SAFETY HARDWARE:

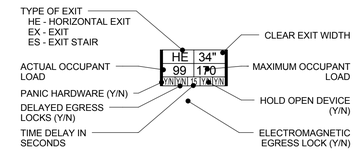

LIFE SAFETY HARDWARE SYMBOL:

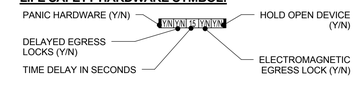

EGRESS INFORMATION SYMBOL:

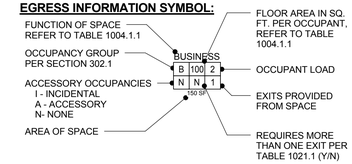

ADDITIONAL LIFE SAFETY SYMBOLS:

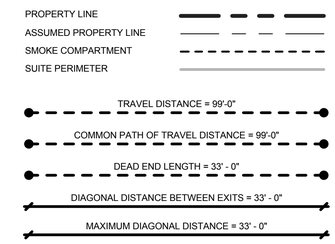

WALL TYPE LEGEND

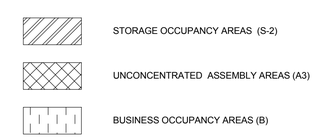

CLIENT AND PROJECT

NORTH CAROLINA DEPARTMENT OF TRANSPORTATION

SCO ID NO.: 14-11006-01A

NEW DIVISION 8 OFFICE BUILDING

150 DOT DRIVE
CARTHAGE, NC 28327

DESIGNER

ANDRE JOHNSON ARCHITECT

PO BOX 14637
RALEIGH, NORTH CAROLINA 27620
TELEPHONE: 919.661.6935
MAIL: info@andrejohnsonarchitect.com

© 2016 Andre Johnson Architect, PLLC
Duplication or reproduction by any means without the express written consent of Andre L. Johnson, Architect is a violation of Federal and international law. The information contained on this document is the intellectual property of Andre L. Johnson, Architect and all rights thereto are Reserved. For exceptions, refer to the Owner-Architect Agreement.

CONSULTANT

REGISTRATION

ANDRE JOHNSON ARCHITECT PLLC
CORPORATE ARCHITECTURAL CERTIFICATION
52876
NORTH CAROLINA
RALEIGH, NC

ANDRE LAMAR JOHNSON
ARCHITECT
10528
NORTH CAROLINA
RALEIGH, NC
08/05/16

ISSUE

No.	Date	Description

SHEET INFO

LIFE SAFETY PLAN

G101

PROJECT NO: P1423.00
DATE: AUGUST 5, 2016
BID DOCUMENTS

NOTE:
-EXISTING CONDITIONS TAKEN FROM DIGITAL FILES PROVIDED BY THE NORTH CAROLINA DEPARTMENT OF TRANSPORTATION ON JANUARY 23, 2015
-PRIOR TO BEGINNING CONSTRUCTION, CONTRACTOR SHALL CONFIRM EXISTING CONDITIONS (INCLUDING BUT NOT LIMITED TO, STORM DRAINAGE, UTILITY AND SEWER LOCATIONS AND ELEVATIONS) AND REPORT ANY DISCREPANCIES TO THE ENGINEER.

CLIENT AND PROJECT

North Carolina Department of Transportation

SCO ID NO.: 14-11006-01A

Division 8 Office Building

150 DOT Drive
Carthage, NC

DESIGNER

ANDRE JOHNSON ARCHITECT

PO BOX 14637
RALEIGH, NORTH CAROLINA 27620
TELEPHONE: 919.661.6935
MAIL: info@andrejohnsonarchitect.com

© 2015 Andre Johnson Architect, PLLC
Duplication or reproduction by any means without the express written consent of Andre L. Johnson, Architect is a violation of Federal and international law. The information contained on this document is the intellectual property of Andre L. Johnson, Architect and all rights thereto are Reserved. For exceptions, refer to the Owner-Architect Agreement.

PEAK Engineering & Design
5448 Apex Peakway #368 | Apex, NC 27502
ph: 919.439.0100 fax: 919.439.6411
www.PeakEngineeringDesign.com
NC License #P-0673

NORTH CAROLINA PROFESSIONAL ENGINEER SEAL 024811 DANIEL H. WOODS
8/5/16

ISSUE

No.	Date	Description

SHEET INFO

EXISTING CONDITIONS AND DEMOLITION

C001

PROJECT NO: 140701
DATE: August 5, 2016

BID DOCUMENTS

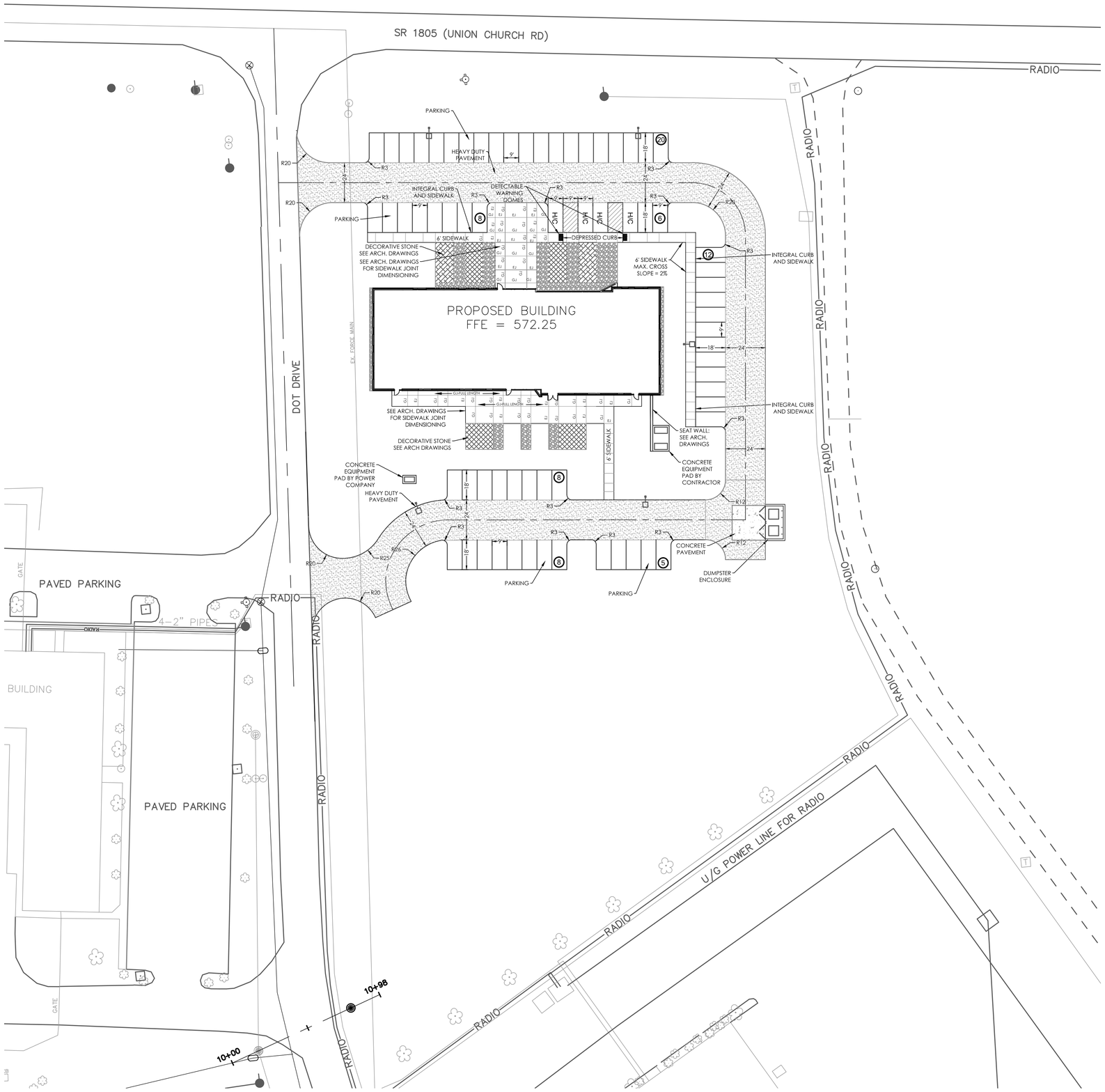

NOTES:
1) ALL CONSTRUCTION SHALL BE IN ACCORDANCE WITH ALL NCDOT AND TOWN OF CARTHAGE STANDARDS AND SPECIFICATIONS
2) SEE LANDSCAPE DRAWINGS FOR DETAIL ON INTEGRAL SIDEWALK AND CURB.
3) SEE SHEET A001 FOR SIDEWALK JOINT DIMENSIONS IN PATIO AREAS.
4) JOINTS IN WALKS WHERE TYPE IS NOT SPECIFIED, FOLLOW EXPANSION JOINT SPACING PER DETAIL 848.01 (AT OR LESS THAN 50' INTERVALS).
5) SEE DETAIL 848.01 FOR SIDEWALK JOINT CONSTRUCTION STANDARDS.

EJ - EXPANSION JOINT

GJ - GROOVED JOINT

HEAVY DUTY CONCRETE

STANDARD DUTY ASPHALT

HEAVY DUTY ASPHALT

0 15' 30' 60'
SCALE: 1" = 30'

CLIENT AND PROJECT

North Carolina Department of Transportation

SCO ID NO.: 14-11006-01A

Division 8 Office Building

150 DOT Drive
Carthage, NC

DESIGNER

ANDRE JOHNSON ARCHITECT
PO BOX 14637
RALEIGH, NORTH CAROLINA 27620
TELEPHONE: 919.661.6935
MAIL: info@andrejohnsonarchitect.com

© 2015 Andre Johnson Architect, PLLC
Duplication or reproduction by any means without the express written consent of Andre L. Johnson, Architect is a violation of Federal and international law. The information contained on this document is the intellectual property of Andre L. Johnson, Architect and all rights thereto are Reserved. For exceptions, refer to the Owner-Architect Agreement.

PEAK Engineering & Design
5448 Apex Peakway #368 | Apex, NC 27502
ph: 919.439.0100 fax: 919.439.6411
www.PeakEngineeringDesign.com
NC License #P-0673

NORTH CAROLINA PROFESSIONAL ENGINEER SEAL DANIEL H. WOODS 8/5/16

ISSUE

No.	Date	Description

SHEET INFO

SITE PLAN

C100

PROJECT NO: 140701
DATE: August 5, 2016

BID DOCUMENTS

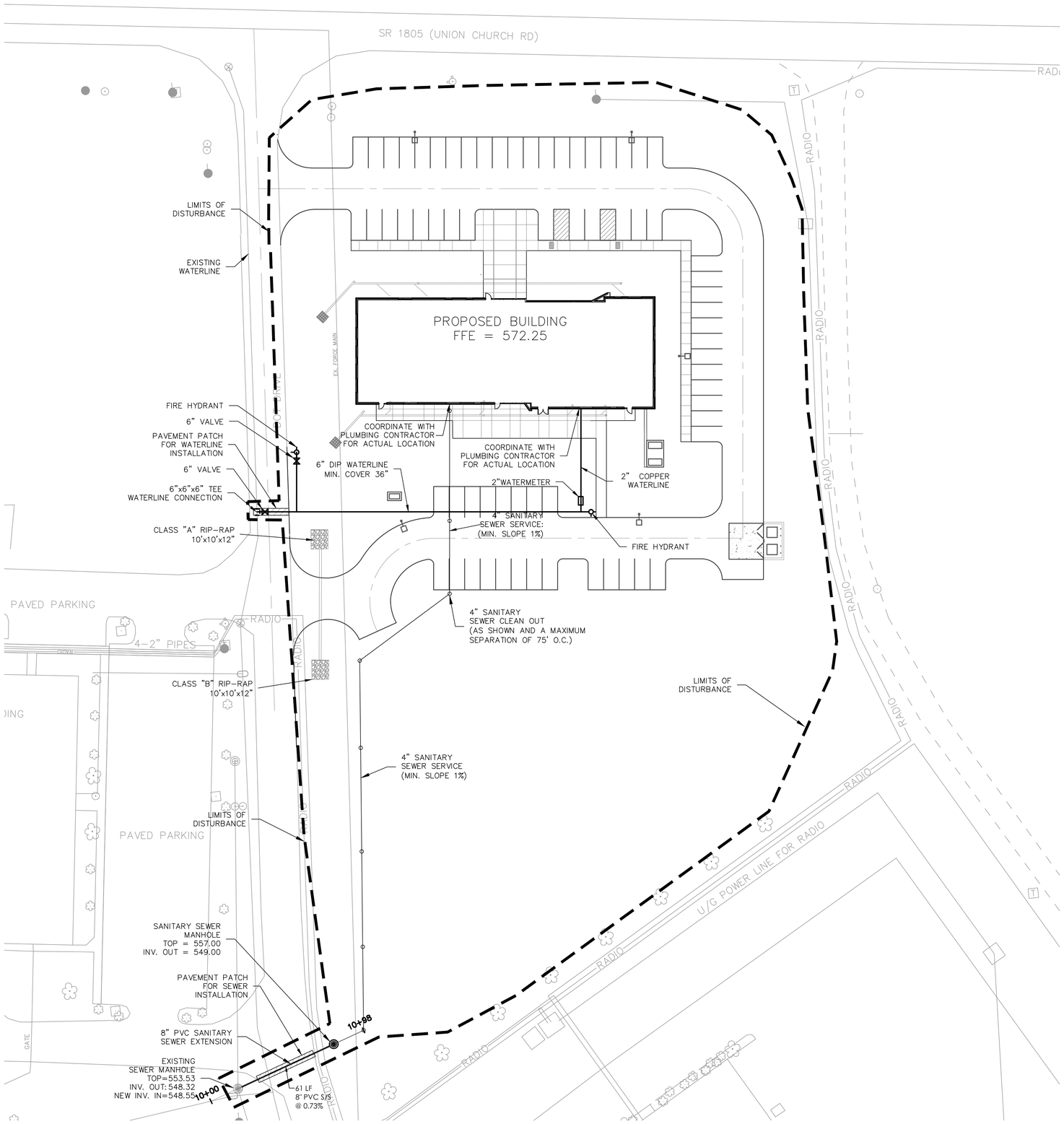

NOTE:
1) COORDINATE WITH PLUMBING CONTRACTOR FOR EXACT LOCATION AND ELEVATIONS FOR UTILITY CONNECTIONS TO BUILDING.
2) ALL CONSTRUCTION SHALL BE PER THE NCDOT AND STATE CONSTRUCTION STANDARDS AND SPECIFICATIONS.
3) ALL CLEANOUTS LOCATED IN PAVED AREAS SHALL BE IN A VALVE BOX PER DETAIL C501.
4) ALL CLEANOUTS LOCATED IN A PEDESTRIAN PATH SHALL HAVE A THREADED, SLOTTED PLUG PER DETAIL SHEET C500.
5) THERE SHALL BE A MINIMUM VERTICAL SEPARATION OF 24" BETWEEN ALL SANITARY SEWER LINES AND WATER LINES AND STORM DRAINS.
6) THERE SHALL BE A MINIMUM SEPARATION OF 12" BETWEEN PROPOSED DUCT BANKS AND STORM DRAINS AND SANITARY SEWER LINES.

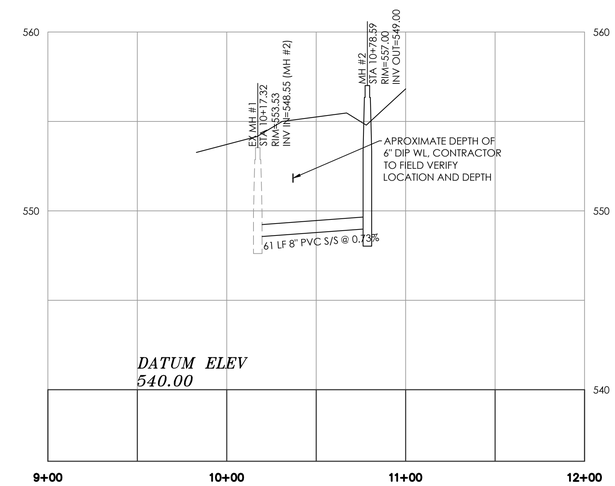

0 15' 30' 60'
SCALE: 1" = 30'

CLIENT AND PROJECT

North Carolina Department of Transportation

SCO ID NO.: 14-11006-01A

Division 8 Office Building

150 DOT Drive
Carthage, NC

DESIGNER

ANDRE JOHNSON ARCHITECT
PO BOX 14637
RALEIGH, NORTH CAROLINA 27620
TELEPHONE: 919.661.6935
MAIL: info@andrejohnsonarchitect.com

© 2015 Andre Johnson Architect, PLLC
Duplication or reproduction by any means without the express written consent of Andre L. Johnson, Architect is a violation of Federal and international law. The information contained on this document is the intellectual property of Andre L. Johnson, Architect and all rights thereto are Reserved. For exceptions, refer to the Owner-Architect Agreement.

PEAK Engineering & Design
5448 Apex Peakway #368 | Apex, NC 27502
ph: 919.439.0100 fax: 919.439.6411
www.PeakEngineeringDesign.com
NC License #P-0673

NORTH CAROLINA PROFESSIONAL ENGINEER SEAL DANIEL H. WOODS
Daniel H. Woods 8/5/16

ISSUE

No.	Date	Description

SHEET INFO

UTILITY PLAN

C200

PROJECT NO: 140701
DATE: August 5, 2016
BID DOCUMENTS

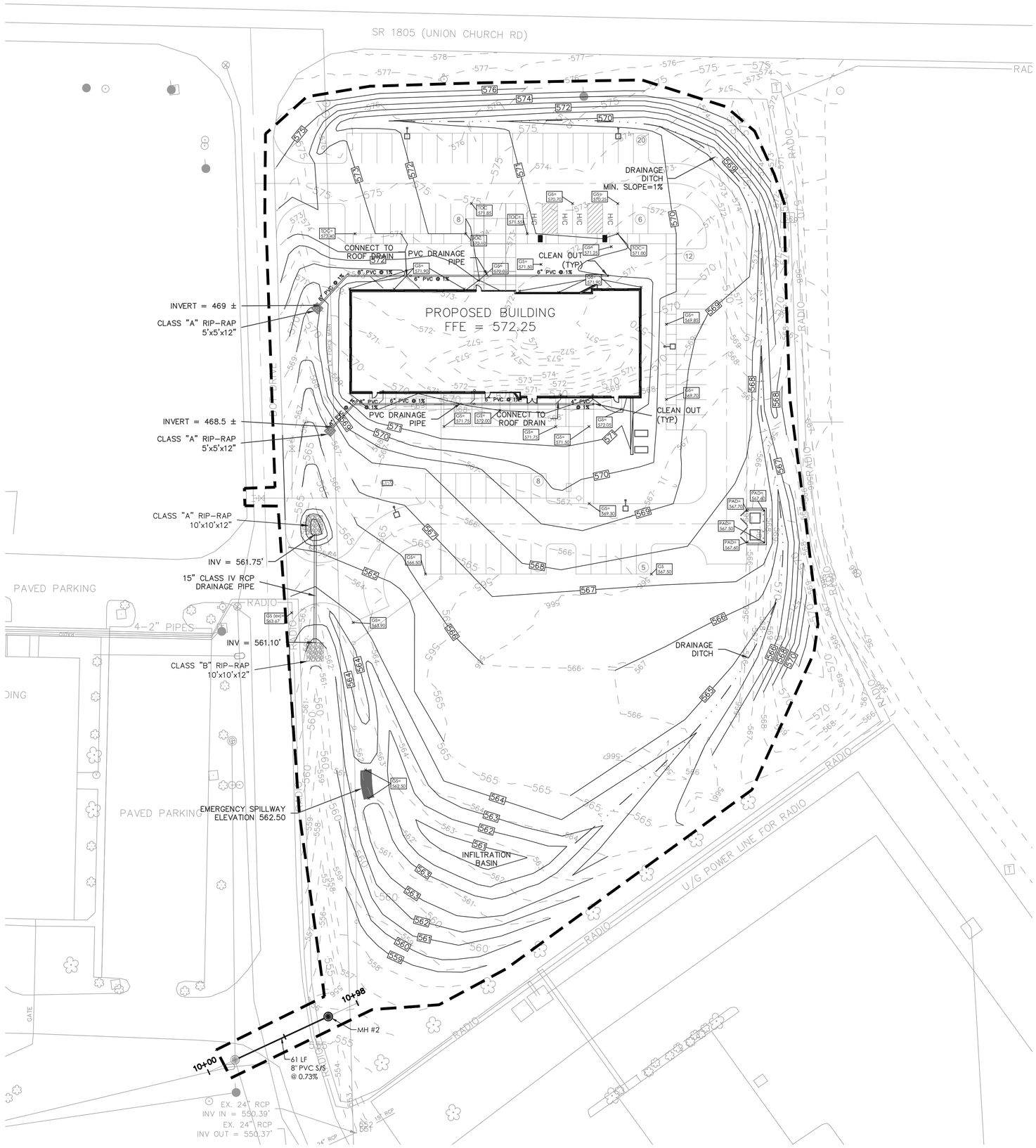

NOTE:
1) ALL CONSTRUCTION SHALL BE PER THE NCDOT AND STATE CONSTRUCTION STANDARDS AND SPECIFICATIONS.
2) ALL CLEANOUTS LOCATED IN PAVED AREAS SHALL BE IN A VALVE BOX PER DETAIL C501.
3) ALL CLEANOUTS LOCATED IN A PEDESTRIAN PATH SHALL HAVE A THREADED, SLOTTED PLUG PER DETAIL SHEET C500.
4) THERE SHALL BE A MINIMUM SEPARATION OF 12" BETWEEN PROPOSED DUCT BANKS AND ALL STORM DRAINS AND SANITARY SEWER LINES

0 15' 30' 60'
SCALE: 1" = 30'

CLIENT AND PROJECT

North Carolina Department of Transportation

SCO ID NO.: 14-11006-01A

Division 8 Office Building

150 DOT Drive
Carthage, NC

DESIGNER

ANDRE JOHNSON ARCHITECT
PO BOX 14637
RALEIGH, NORTH CAROLINA 27620
TELEPHONE: 919.661.6935
MAIL: info@andrejohnsonarchitect.com

© 2015 Andre Johnson Architect, PLLC
Duplication or reproduction by any means without the express written consent of Andre L. Johnson, Architect is a violation of Federal and international law. The information contained on this document is the intellectual property of Andre L. Johnson, Architect and all rights thereto are Reserved. For exceptions, refer to the Owner-Architect Agreement.

PEAK Engineering & Design
5448 Apex Peakway #368 | Apex, NC 27502
ph: 919.439.0100 fax: 919.439.6411
www.PeakEngineeringDesign.com
NC License #P-0673

ISSUE

No.	Date	Description

NORTH CAROLINA PROFESSIONAL ENGINEER SEAL DANIEL H. WOODS 8/5/16

SHEET INFO

GRADING AND DRAINAGE PLAN

C300

PROJECT NO: 140701
DATE: August 5, 2016

BID DOCUMENTS

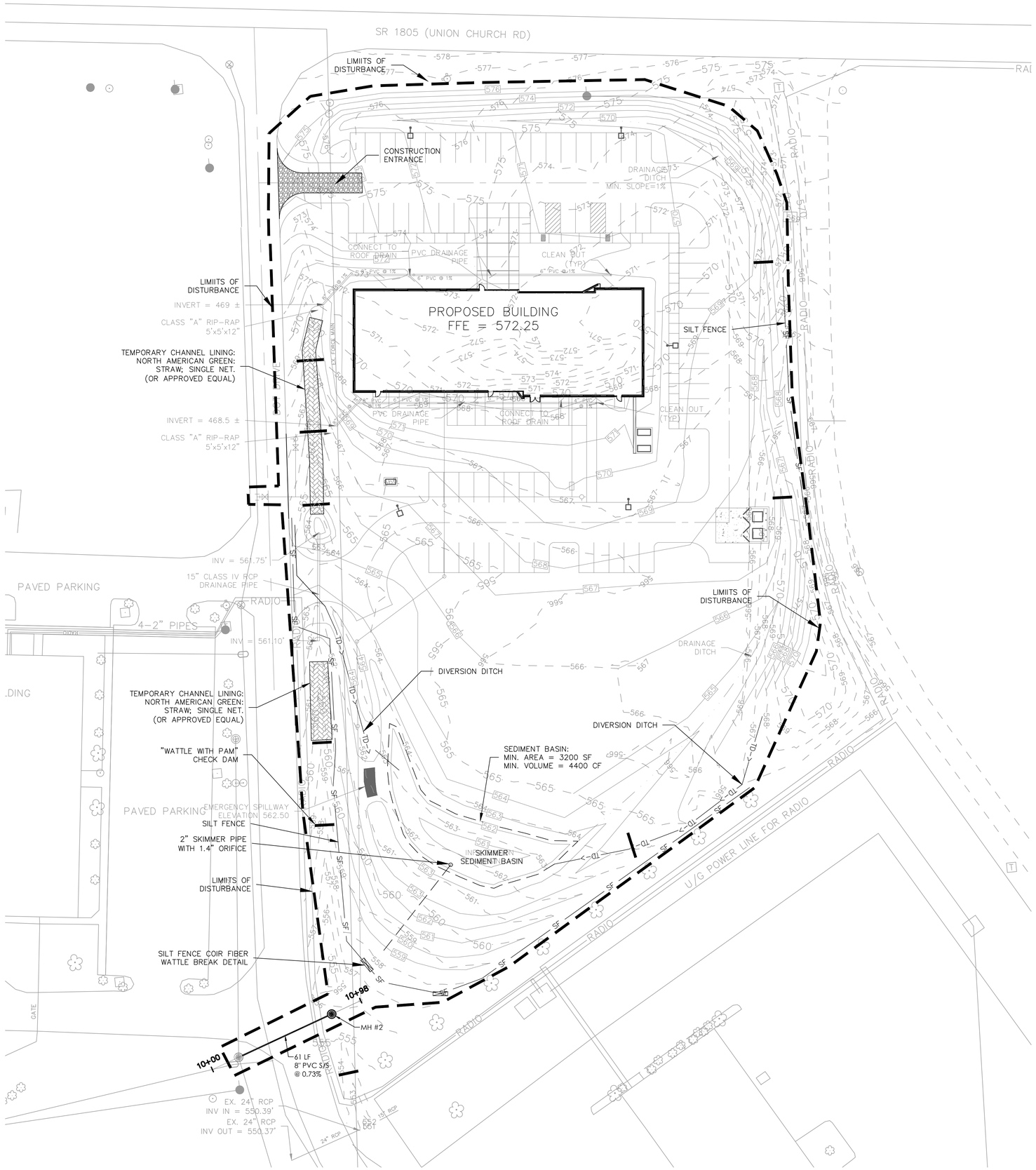

SEED BED PREPARATION

A) CHISEL COMPACTED AREA AND SPREAD TOPSOIL 3" DEEP OVER ADVERSE SOIL CONDITIONS.
B) RIP THE ENTIRE AREA TO A 4" DEPTH.
C) REMOVE ALL LOOSE ROCK, ROOTS, AND OTHER OBSTRUCTIONS LEAVING SURFACE REASONABLY SMOOTH AND UNIFORM.
D) APPLY AGRICULTURAL LIME, FERTILIZER, AND SUPERPHOSPHATE UNIFORMLY AND MIX WITH SOIL (SEE *BELOW).
E) CONTINUE TILLAGE UNTIL A WELL PULVERIZED, FIRM, REASONABLY UNIFORM SEED BED IS PREPARED 5" TO 6" DEEP.
F) SEED ON A FRESHLY PREPARED SEED BED AND COVER SEED LIGHTLY WITH SEEDING EQUIPMENT OR CULTIPACK AFTER SEEDING.
G) STRAW/MULCH IMMEDIATELY AFTER SEEDING AND ANCHOR STRAW/MULCH.
H) INSPECT ALL SEEDED AREAS AND MAKE NECESSARY REPAIRS OR RE-SEEDING WITHIN THE PLANTING SEASON, IF POSSIBLE. IF STAND SHOULD BE OVER 60% DAMAGED, REESTABLISH FOLLOWING ORIGINAL LIME, FERTILIZER AND SEEDING RATES.
I) CONSULT CONSERVATION INSPECTOR ON MAINTENANCE TREATMENT AND FERTILIZATION AFTER PERMANENT COVER IS ESTABLISHED.

* APPLY:

AGRICULTURAL LIMESTONE:	2T/AC (3 TON IN CLAY)
FERTILIZER:	10-10-10 AT 800-1000#/ACRE
SUPERPHOSPHATE:	500#/AC OF 20% ANALYSIS SUPERPHOSPATE
MULCH	2 TON (80 BALES) SM. GRAIN STRAW/ACRE
ANCHOR	LIQUID ASPHALT, 400 GAL/ACRE, OR EMULSIFIED ASPHALT 300 GAL/ACRE

NOTES:

1) SEEDING SELECTION SHALL BE PER NCDOT ROADSIDE ENVIRONMENTAL UNIT (SOIL AND WATER SECTION) SPECIAL PROVISION "SEEDING AND MULCHING-NATIVE GRASS-EAST"

2) ALL EROSION CONTROL SHALL MEET THE EROSION CONTROL DETAILS SHOWN ON THESE DRAWINGS AND APPLICABLE "SPECIAL PROVISIONS" OF THE NCDOT ROADSIDE ENVIRONMENTAL UNIT (SOIL AND WATER SECTION). INCLUDING, BUT NOT LIMITED TO, WATTLE WITH PAM, SKIMMER BASIN, AND SILT FENCE WITH WATTLE BREAK.

EROSION CONTROL LEGEND	
DESCRIPTION	SYMBOL
SILT FENCE	—SF—
SILT FENCE WATTLE BREAK	
GRAVEL CONSTRUCTION ENTRANCE	
CHANNEL LINING	
WATTLE WITH PAM	
TEMPORARY DIVERSION DITCH	—TD—>
LIMITS OF DISTURBANCE	

0 15' 30' 60'
SCALE: 1" = 30'

N

CLIENT AND PROJECT

North Carolina Department of Transportation

SCO ID NO.: 14-11006-01A

Division 8 Office Building

150 DOT Drive
Carthage, NC

DESIGNER

ANDRE JOHNSON ARCHITECT
PO BOX 14637
RALEIGH, NORTH CAROLINA 27620
TELEPHONE: 919.661.6935
MAIL: info@andrejohnsonarchitect.com

© 2015 Andre Johnson Architect, PLLC
Duplication or reproduction by any means without the express written consent of Andre L. Johnson, Architect is a violation of Federal and international law. The information contained on this document is the intellectual property of Andre L. Johnson, Architect and all rights thereto are Reserved. For exceptions, refer to the Owner-Architect Agreement.

PEAK Engineering & Design
5448 Apex Peakway #368 | Apex, NC 27502
ph: 919.439.0100 fax: 919.439.6411
www.PeakEngineeringDesign.com
NC License #P-0673

NORTH CAROLINA PROFESSIONAL ENGINEER SEAL DANIEL H. WOODS 8/5/16

ISSUE

No.	Date	Description

SHEET INFO

EROSION CONTROL PLAN

C400

PROJECT NO: 140701
DATE: August 5, 2016
BID DOCUMENTS

STANDARD DRAWING 1630.05 — TEMPORARY DIVERSION

STATE OF NORTH CAROLINA
DEPT. OF TRANSPORTATION
DIVISION OF HIGHWAYS
RALEIGH, N.C.
1-12

ENGLISH STANDARD DRAWING FOR
TEMPORARY DIVERSION

SHEET 1 OF 1
1630.05

NOTES

EXCAVATE TEMPORARY DIVERSION WITH NON-VERTICAL SIDE SLOPES AND NOT GREATER THAN 1.5:1 SLOPE.
SEED BERM CREATED BY COMPACTED SOIL AS DIRECTED.

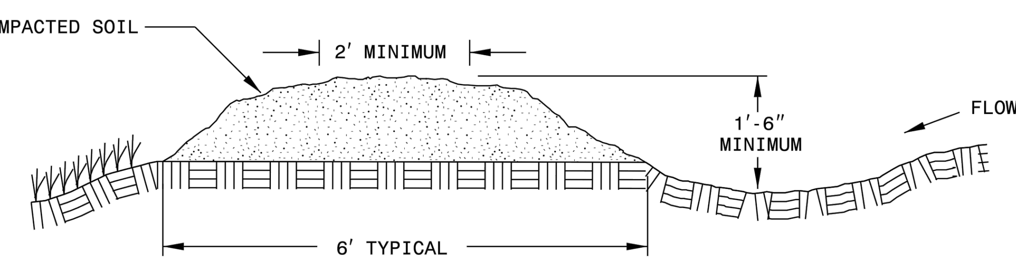

CROSS SECTIONAL VIEW

STANDARD DRAWING 1607.01 — GRAVEL CONSTRUCTION ENTRANCE

ENGLISH STANDARD DRAWING FOR
GRAVEL CONSTRUCTION ENTRANCE

SHEET 1 OF 1
1607.01

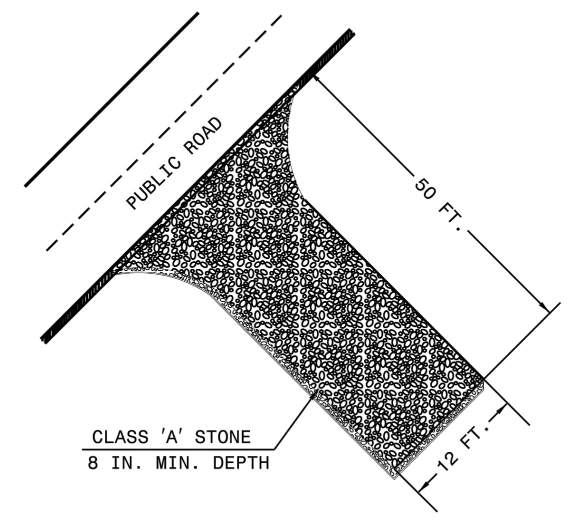

NOTES

1. PROVIDE TURNING RADIUS SUFFICIENT TO ACCOMMODATE LARGE TRUCKS.
2. LOCATE ENTRANCES TO PROVIDE FOR UTILIZATION BY ALL CONSTRUCTION VEHICLES.
3. MUST BE MAINTAINED IN A CONDITION WHICH WILL PREVENT TRACKING OR DIRECT FLOW OF MUD ONTO STREETS. PERIODIC TOPDRESSING WITH STONE WILL BE NECESSARY.
4. ANY MATERIAL TRACKED ONTO THE ROADWAY MUST BE CLEANED UP IMMEDIATELY.
5. LOCATE GRAVEL CONSTRUCTION ENTRANCE AT ALL POINTS OF INGRESS AND EGRESS UNTIL SITE IS STABILIZED. PROVIDE FREQUENT CHECKS OF THE DEVICE AND TIMELY MAINTENANCE.
6. NUMBER AND LOCATION OF CONSTRUCTION ENTRANCES TO BE DETERMINED BY THE ENGINEER.
7. USE CLASS 'A' STONE OR OTHER COARSE AGGREGATE APPROVED BY THE ENGINEER.
8. INSTALL CONSTRUCTION ENTRANCES IN A WAY TO PREVENT VEHICLES FROM BYPASSING CONSTRUCTION ENTRANCE LEAVING PROJECT SITE.

NOTE: PLACE FILTRATION GEOTEXTILE BENEATH STONE

STANDARD DRAWING 1605.01 — TEMPORARY SILT FENCE

ENGLISH STANDARD DRAWING FOR
TEMPORARY SILT FENCE

SHEET 1 OF 1
1605.01

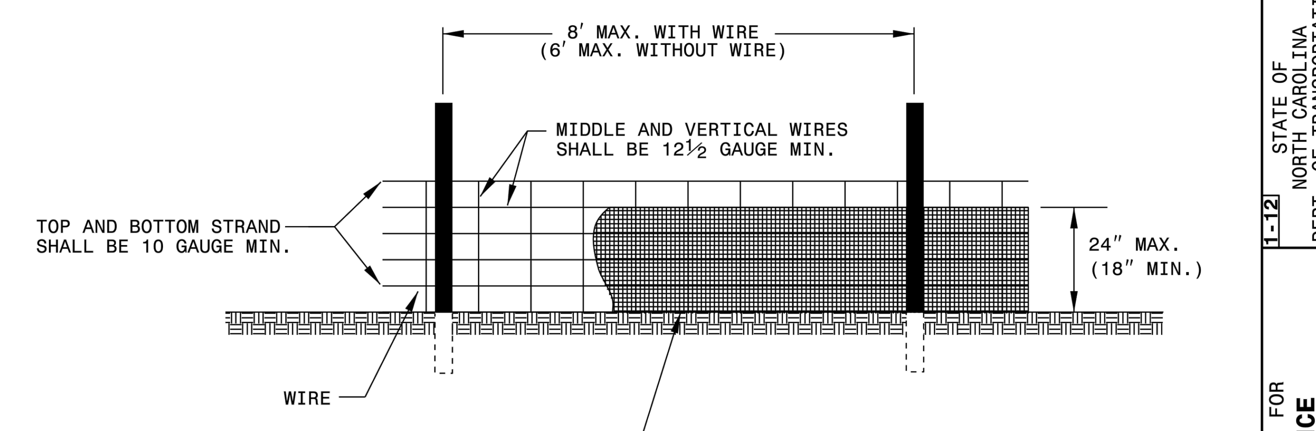

NOTES

USE WIRE A MINIMUM OF 32″ IN WIDTH AND WITH A MINIMUM OF 6 LINE WIRES WITH 12″ STAY SPACING.
USE FILTRATION GEOTEXTILE A MINIMUM OF 36″ IN WIDTH AND FASTEN ADEQUATELY TO THE WIRE AS DIRECTED.
PROVIDE 5′-0″ STEEL POST OF THE SELF-FASTENER ANGLE STEEL TYPE.
FOR MECHANICAL SLICING METHOD INSTALLATION, GEOTEXTILE SHALL BE A MAXIMUM OF 18″ ABOVE GROUND SURFACE.

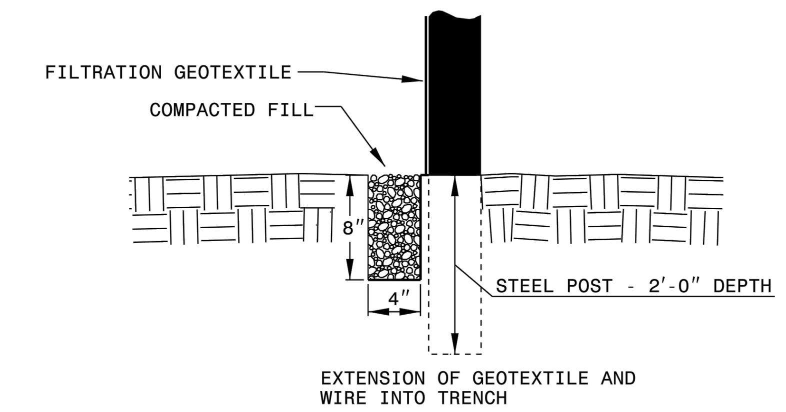

STANDARD DRAWING 1515.01 — WATER METER

ENGLISH STANDARD DRAWING FOR
WATER METER

SHEET 1 OF 1
1515.01

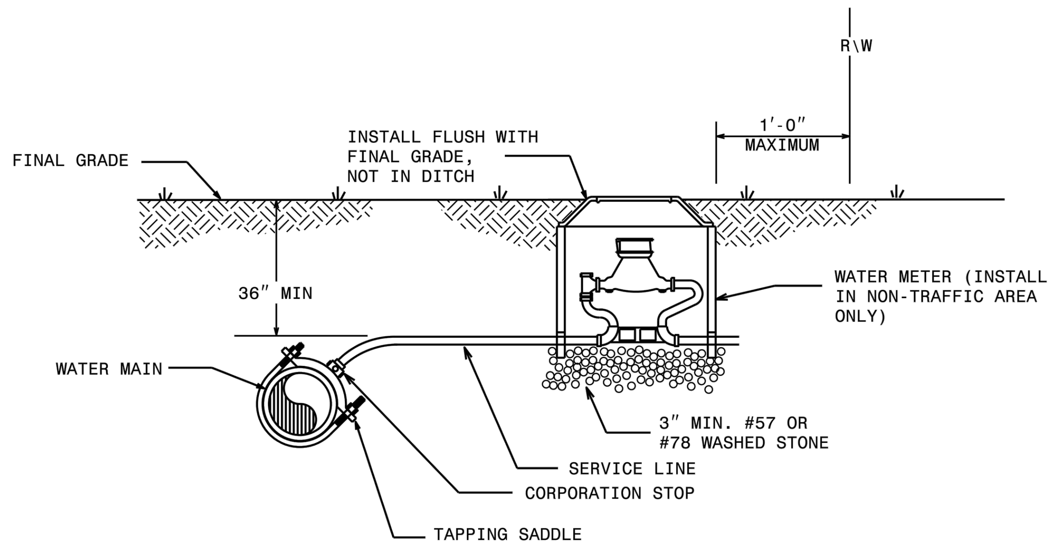

NOTES:

1. THIS DETAIL SHOWS THE TYPICAL FINAL WATER METER CONFIGURATION AFTER INSTALLATION OF A PROPOSED WATER METER, RECONNECTION OF AN EXISTING WATER METER, OR RELOCATION OF A WATER METER.

STANDARD DRAWING 1520.01 — SEWER CLEAN OUT

ENGLISH STANDARD DRAWING FOR
SEWER CLEAN OUT

SHEET 1 OF 1
1520.01

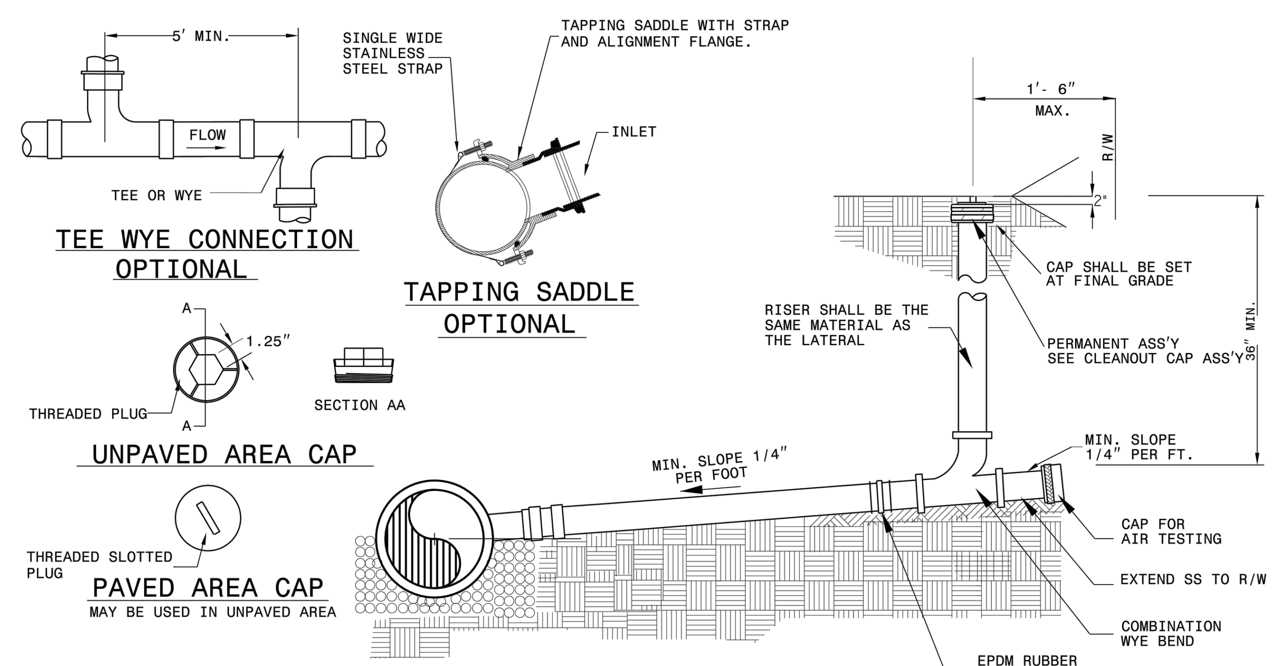

NOTES:

1. THIS DETAIL SHOWS THE TYPICAL FINAL CONFIGURATION OF A PROPOSED SEWER CLEAN OUT, A RELOCATED SEWER CLEAN OUT, OR A RECONNECTED SEWER CLEAN OUT.
2. USE 45 DEGREE VERTICAL BEND AT INLET IF GRADE ALLOWS.

INLET WITH 45 DEGREE BEND OPTIONAL

WATTLE WITH POLYACRYLAMIDE (PAM) DETAIL

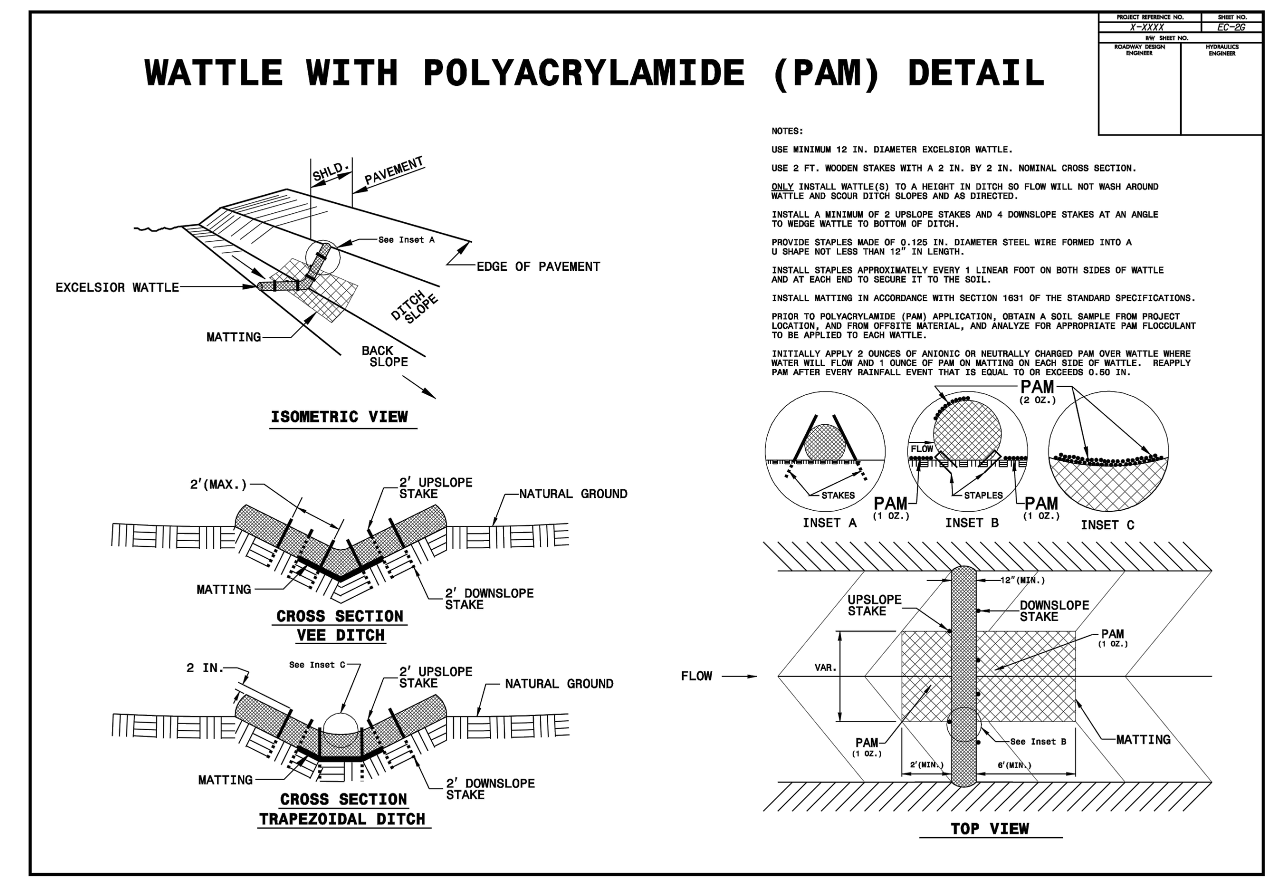

STANDARD 1½" & 2" METER INSTALLATION & VAULT

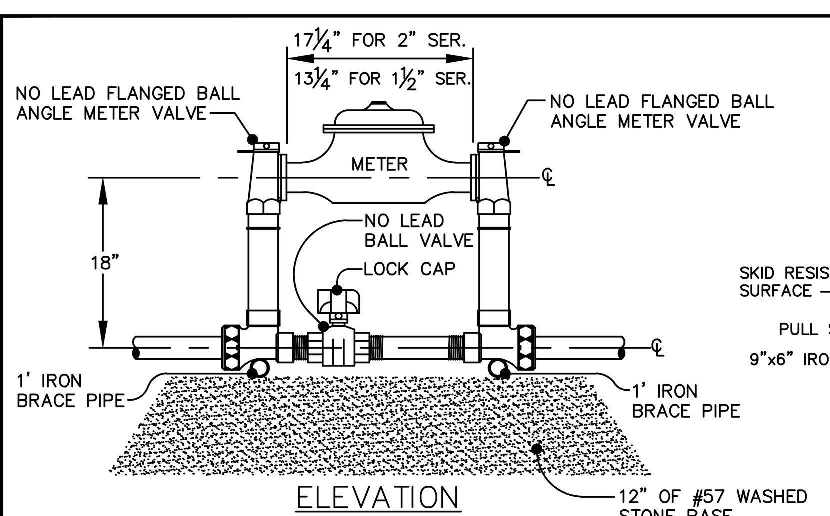

NOTES:
1) PIPING TO BE 'NO LEAD' BRASS AND COPPER TUBING. METER INLET AND OUTLET TO BE EQUIPPED WITH FLANGED BALL ANGLE METER VALVES.
2) CUSTOM SETTERS SHALL BE EQUIPPED WITH STANDARD LOW BYPASS WITH BALL VALVE AND PADLOCK WINGS.
3) CUSTOM SETTERS SHALL BE AS MANUFACTURED BY MUELLER, FORD, AY MCDONALD, OR APPROVED EQUAL.
4) ALL BRASS COMPONENTS SHALL BE 'NO LEAD' BRASS MEETING UNS C89833 AS PER ASTM B584.
5) ALL COMMERCIAL APPLICATIONS REQUIRE A SEPARATE ABOVE GROUND BACKFLOW PREVENTER.
6) CUSTOM SETTER SHALL BE INSTALLED SUCH THAT METER REGISTER IS LOCATED 5 TO 8 INCHES BELOW METER BOX COVER.

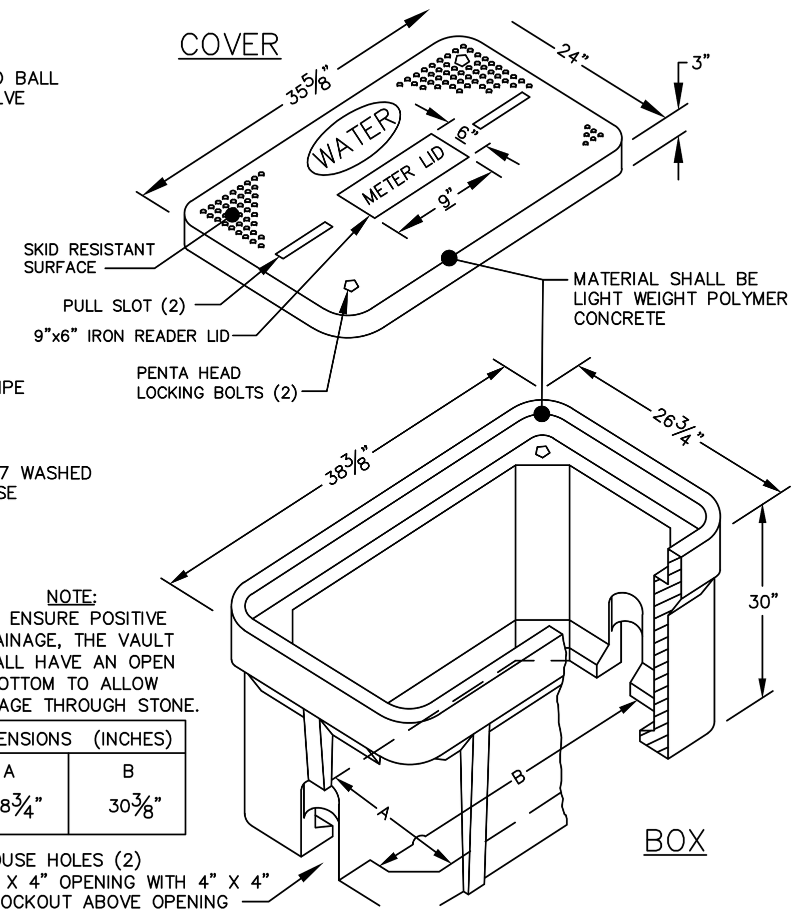

NOTE:
TO ENSURE POSITIVE DRAINAGE, THE VAULT SHALL HAVE AN OPEN BOTTOM TO ALLOW DRAINAGE THROUGH STONE.

DIMENSIONS	(INCHES)
A	B
18¾"	30⅜"

STANDARD 1½ " & 2" METER INSTALLATION & VAULT

STANDARD DRAWING 848.01 — CONCRETE SIDEWALK

ENGLISH STANDARD DRAWING FOR
CONCRETE SIDEWALK

SHEET 1 OF 1
848.01

NOTES:

CONSTRUCT STANDARD SIDEWALK 5′ WIDE AND 4″ THICK UNLESS OTHERWISE DENOTED ON PLANS.

PLACE A GROOVE JOINT 1″ DEEP WITH ⅛″ RADII IN THE CONCRETE SIDEWALK AT 5′ INTERVALS. ONE ½″ EXPANSION JOINT WILL BE REQUIRED AT 50′ INTERVALS. A ½″ EXPANSION JOINT WILL BE REQUIRED WHERE THE SIDEWALK JOINS ANY RIGID STRUCTURE.

SEE STD. DWG. 848.05 FOR WHEELCHAIR RAMP LOCATION REQUIREMENTS AND CONSTRUCTION GUIDELINES.

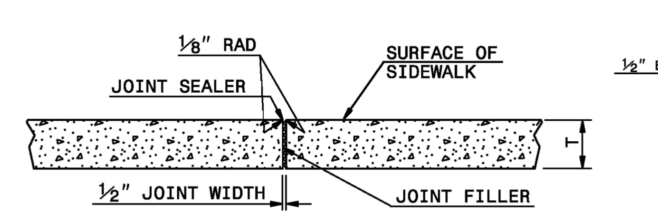

TRANSVERSE EXPANSION JOINT IN SIDEWALK

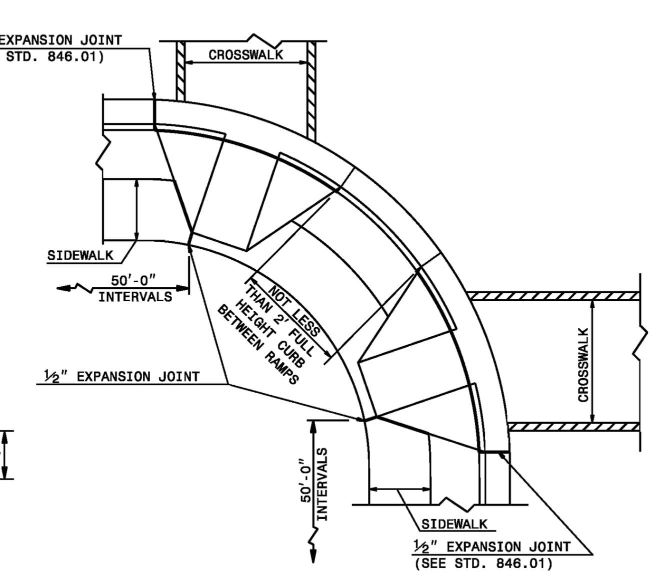

PLAN VIEW

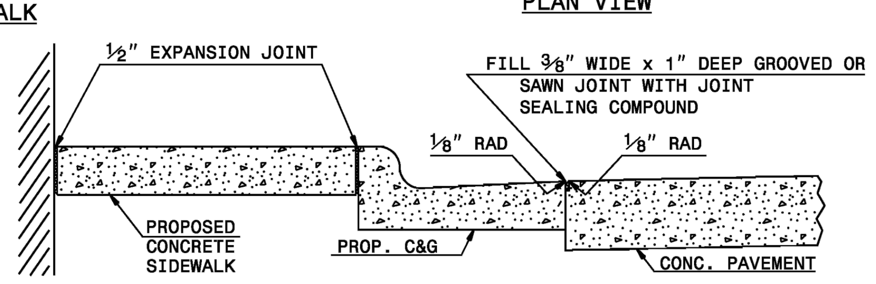

DETAILS SHOWING JOINTS IN CONCRETE SIDEWALK

STANDARD DRAWING 1515.02 — FIRE HYDRANT

ENGLISH STANDARD DRAWING FOR
FIRE HYDRANT

SHEET 1 OF 1
1515.02

NOTES:

1. THIS DETAIL SHOWS THE TYPICAL FINAL FIRE HYDRANT CONFIGURATION AFTER INSTALLATION OF A PROPOSED FIRE HYDRANT, RECONNECTION OF AN EXISTING FIRE HYDRANT, OR RELOCATION OF A FIRE HYDRANT.
2. KEEP DRAIN PORTS FREE FROM OBSTRUCTION.
3. RESTRAIN ALL PIPE JOINTS AND FITTINGS. ACCEPTABLE TYPES OF RESTRAINT INCLUDE RESTRAINING GLANDS; RESTRAINED, PUSH-ON JOINTS; AND 3/4″ BITUMINOUS COATED, ALL-THREAD RESTRAINING RODS. THRUST BLOCKS ARE NOT AN ACCEPTABLE TYPE OF RESTRAINT.
4. FOR RELOCATED OR RECONNECTED FIRE HYDRANTS,VERIFY THE VALVE IS RESTRAINED TO THE MAIN. PROVIDE APPROPRIATE RESTRAINT.
5. HYDRANT LOCATION APPLIES TO PROPOSED AND RELOCATED FIRE HYDRANTS.
6. LOCATE FIRE HYDRANT WITH 3′ HORIZONTAL CLEARANCE FROM ABOVE GROUND OBJECTS.
7. PROVIDE A MINIMUM OF 3′ COVER OVER ALL SECTIONS OF HORIZONTAL PIPE. USE FITTINGS AS NECESSARY.
8. TAPPING SLEEVES MAY BE USED ON EXISTING MAINS IN LIEU OF DI TEES.
9. LOCATE FIRE HYDRANT OUTSIDE OF THE VEHICLE RECOVERY AREA, ADJACENT TO THE R/W LINE, OR IN A PROTECTED AREA.

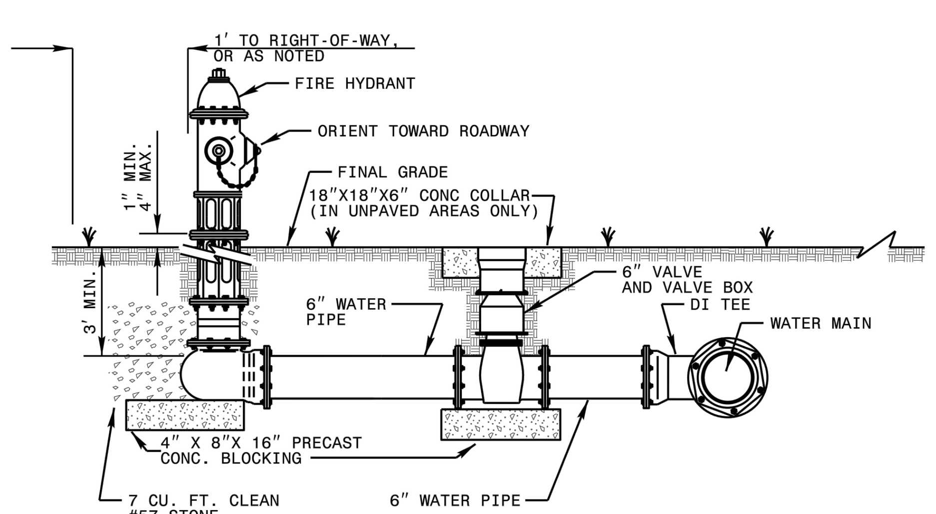

CLIENT AND PROJECT

North Carolina Department of Transportation

SCO ID NO.: 14-11006-01A

Division 8 Office Building

150 DOT Drive
Carthage, NC

DESIGNER

ANDRE JOHNSON ARCHITECT

PO BOX 14637
RALEIGH, NORTH CAROLINA 27620
TELEPHONE: 919.661.6935
MAIL: info@andrejohnsonarchitect.com

© 2015 Andre Johnson Architect, PLLC
Duplication or reproduction by any means without the express written consent of Andre L. Johnson, Architect is a violation of Federal and international law. The information contained on this document is the intellectual property of Andre L. Johnson, Architect and all rights thereto are Reserved. For exceptions, refer to the Owner-Architect Agreement.

PEAK Engineering & Design
5448 Apex Peakway #368 | Apex, NC 27502
ph: 919.439.0100 fax: 919.439.6411
www.PeakEngineeringDesign.com
NC License #P-0673

NORTH CAROLINA PROFESSIONAL ENGINEER SEAL 032616 DANIEL H. WOODS 8/5/16

ISSUE

No. Date Description

SHEET INFO

DETAILS

C500

PROJECT NO: 140701
DATE: August 5, 2016
BID DOCUMENTS

STATE OF NORTH CAROLINA
DEPT. OF TRANSPORTATION
DIVISION OF HIGHWAYS
RALEIGH, N.C.

1-12

ENGLISH STANDARD DRAWING FOR
DRIVEWAY PIPE CONSTRUCTION
USING NO SPECIAL END SECTIONS

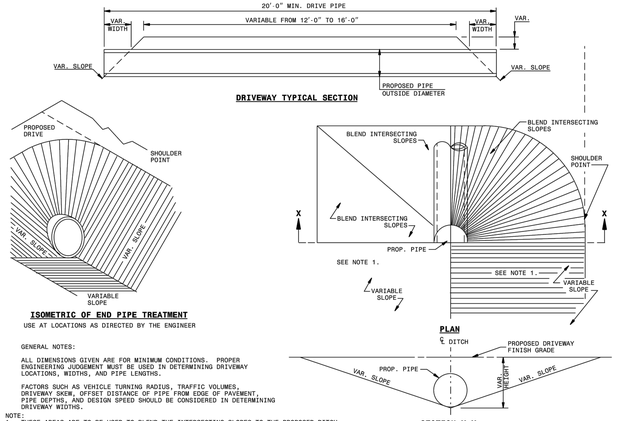

GENERAL NOTES:

ALL DIMENSIONS GIVEN ARE FOR MINIMUM CONDITIONS. PROPER ENGINEERING JUDGEMENT MUST BE USED IN DETERMINING DRIVEWAY LOCATIONS, WIDTHS, AND PIPE LENGTHS.

FACTORS SUCH AS VEHICLE TURNING RADIUS, TRAFFIC VOLUMES, DRIVEWAY SKEW, OFFSET DISTANCE OF PIPE FROM EDGE OF PAVEMENT, PIPE DEPTHS, AND DESIGN SPEED SHOULD BE CONSIDERED IN DETERMINING DRIVEWAY WIDTHS.

NOTE:
1. THESE AREAS ARE TO BE USED TO BLEND THE INTERSECTING SLOPES TO THE PROPOSED DITCH.

SHEET 1 OF 1
310.10

STATE OF NORTH CAROLINA
DEPT. OF TRANSPORTATION
DIVISION OF HIGHWAYS
RALEIGH, N.C.

1-12

ENGLISH STANDARD DRAWING FOR
DRIVEWAY PIPE CONSTRUCTION
USING NO SPECIAL END SECTIONS

SHEET 1 OF 1
310.10

STATE OF NORTH CAROLINA
DEPT. OF TRANSPORTATION
DIVISION OF HIGHWAYS
RALEIGH, N.C.

1-12

ENGLISH STANDARD DRAWING FOR
PRECAST CONCRETE SANITARY SEWER MANHOLE WITH CAST-IN-PLACE BOTTOM

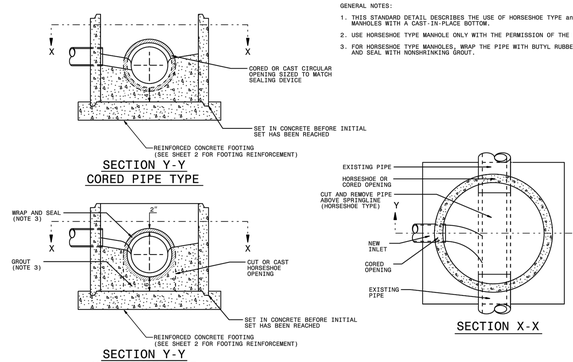

GENERAL NOTES:
1. THIS STANDARD DETAIL DESCRIBES THE USE OF HORSESHOE TYPE and CORED MANHOLES WITH A CAST-IN-PLACE BOTTOM.
2. USE HORSESHOE TYPE MANHOLE ONLY WITH THE PERMISSION OF THE ENGINEER.
3. FOR HORSESHOE TYPE MANHOLES, WRAP THE PIPE WITH BUTYL RUBBER GASKET, AND SEAL WITH NONSHRINKING GROUT.

SHEET 1 OF 2
1525.06

STATE OF NORTH CAROLINA
DEPT. OF TRANSPORTATION
DIVISION OF HIGHWAYS
RALEIGH, N.C.

1-12

ENGLISH STANDARD DRAWING FOR
PRECAST CONCRETE SANITARY SEWER MANHOLE WITH CAST-IN-PLACE BOTTOM

SHEET 1 OF 2
1525.06

STATE OF NORTH CAROLINA
DEPT. OF TRANSPORTATION
DIVISION OF HIGHWAYS
RALEIGH, N.C.

1-12

ENGLISH STANDARD DRAWING FOR
PRECAST CONCRETE SANITARY SEWER MANHOLE WITH CAST-IN-PLACE BOTTOM

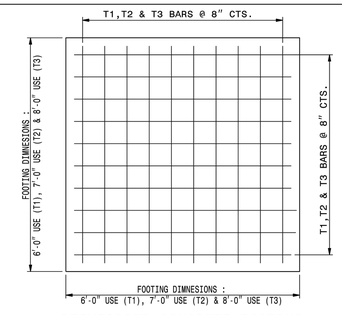

BILL OF MATERIAL FOR 6'-0" FOOTING				
BAR	SIZE	LENGTH	NO.	WT. lbs.
T1	#5	5'-6"	18	103
CLASS "A" CONC. YD³ 9" THICK				1.00

BILL OF MATERIAL FOR 7'-0" FOOTING				
BAR	SIZE	LENGTH	NO.	WT. lbs.
T2	#5	6'-6"	20	136
CLASS "A" CONC. YD³ 9" THICK				1.36
CLASS "A" CONC. YD³ 12" THICK				1.82

BILL OF MATERIAL FOR 8'-0" FOOTING				
BAR	SIZE	LENGTH	NO.	WT. lbs.
T3	#5	7'-6"	24	188
CLASS "A" CONC. YD³ 12" THICK				2.37

PLACE REINFORCING STEEL SO THAT STEEL IS PLACED A MIN. OF 2" AND A MAX. OF 4" FROM THE TOP OF THE SLAB.

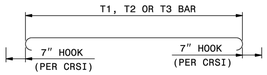

SHEET 2 OF 2
1525.06

STATE OF NORTH CAROLINA
DEPT. OF TRANSPORTATION
DIVISION OF HIGHWAYS
RALEIGH, N.C.

1-12

ENGLISH STANDARD DRAWING FOR
PRECAST CONCRETE SANITARY SEWER MANHOLE WITH CAST-IN-PLACE BOTTOM

SHEET 8 OF 2
1525.06

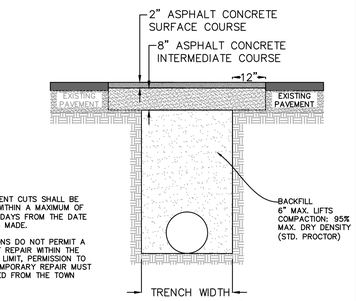

NOTES:

1. ALL PAVEMENT CUTS SHALL BE REPAIRED WITHIN A MAXIMUM OF SEVEN (7) DAYS FROM THE DATE THE CUT IS MADE.
2. IF CONDITIONS DO NOT PERMIT A PERMANENT REPAIR WITHIN THE GIVEN TIME LIMIT, PERMISSION TO MAKE A TEMPORARY REPAIR MUST BE OBTAINED FROM THE TOWN ENGINEER.

MIN: PIPE OUTSIDE DIAMETER + 8" EACH SIDE
MAX: PIPE OUTSIDE DIAMETER +12" EACH SIDE

TRENCH & PAVEMENT REPAIR SECTIONS

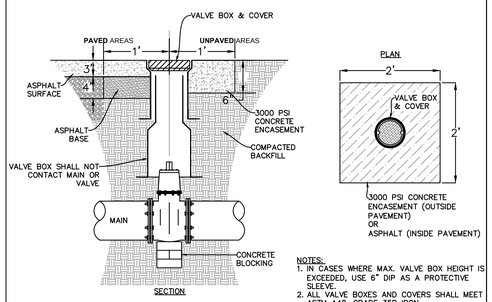

NOTES:
1. IN CASES WHERE MAX. VALVE BOX HEIGHT IS EXCEEDED, USE 6" DIP AS A PROTECTIVE SLEEVE.
2. ALL VALVE BOXES AND COVERS SHALL MEET ASTM A48, GRADE 35B IRON REQUIREMENTS.

VALVE BOX INSTALLATION

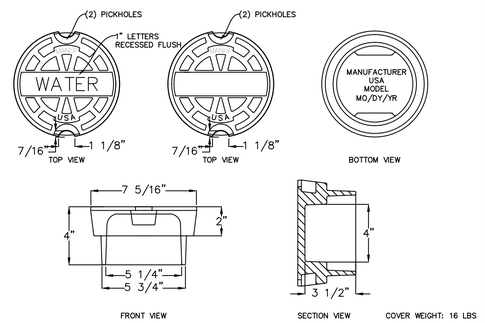

VALVE COVER

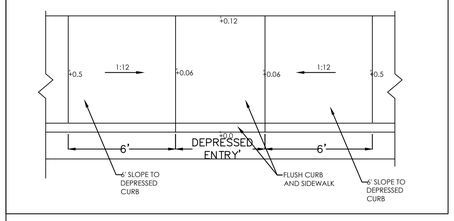

C501 DEPRESSED ENTRY CURB RAMP
SCALE:NTS

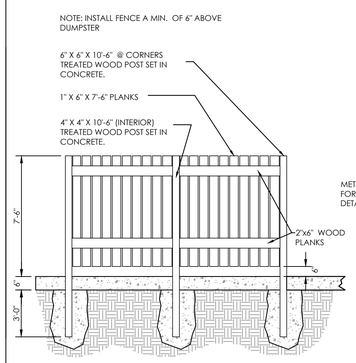

WALL SECTION (FROM INSIDE ENCLOSURE)

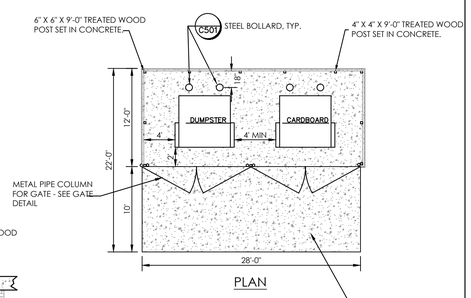

PLAN

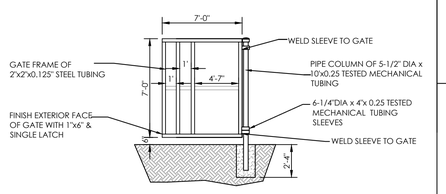

METAL GATE

NOTE:
1. CONTRACTOR TO SUBMIT SHOP DRAWINGS FOR APPROVAL PRIOR TO CONSTRUCTION
2. DUMPSTER TO MATCH COLOR OF BUILDING

C501 DOUBLE DUMPSTER WOOD ENCLOSURE
SCALE: N.T.S.

BOLLARD DETAIL
NO SCALE

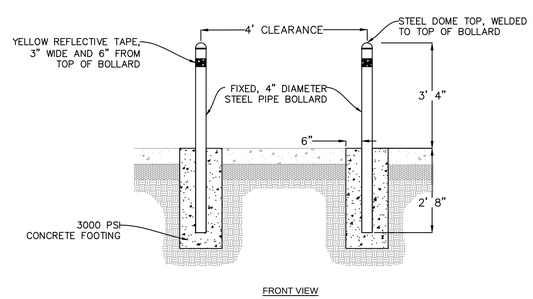

FRONT VIEW

NOTE:
ALL METAL SHALL BE GALVANIZED PAINT, ONE COAT METAL PRIMER AND TWO COATS BLACK METAL ENAMEL OR VINYLCOATING/COVERING.

C501 DUMPSTER BOLLARDS
SCALE:NTS

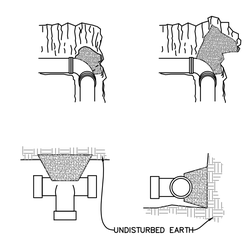

MINIMUM CONCRETE BLOCKING (C.Y.)*					
NOM. PIPE DIA. (INCHES)	TEES & DEAD ENDS	90° BEND	45° BEND	22-1/2° BEND	11-1/4° BEND
4	0.1	0.1	0.1	0.1	0.1
6	0.2	0.2	0.1	0.1	0.1
8	0.2	0.3	0.2	0.1	0.1
10	0.3	0.5	0.3	0.2	0.2
12	0.4	0.6	0.5	0.3	0.3
14	0.7	0.9	0.6	0.5	0.5
16	0.7	0.9	0.6	0.5	0.5
18	0.9	1.2	0.7	0.6	0.6
20	1.1	1.6	1.1	0.7	0.7
24	1.7	2.3	1.6	0.9	0.9

* CONCRETE SHALL BE 3000 PSI

NOTE: WRAP FITTINGS IN 6 MIL PLASTIC BEFORE POURING CONCRETE

REACTION BLOCKING

CONCRETE PAVEMENT

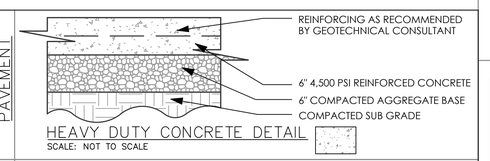

HEAVY DUTY CONCRETE DETAIL
SCALE: NOT TO SCALE

ASPHALT PAVEMENT

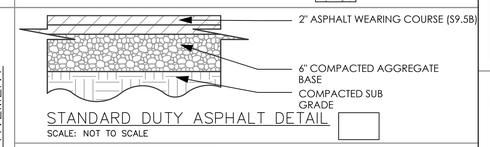

STANDARD DUTY ASPHALT DETAIL
SCALE: NOT TO SCALE

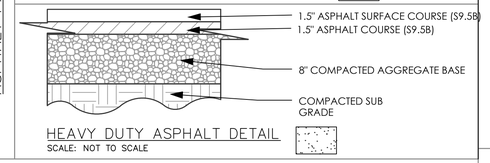

HEAVY DUTY ASPHALT DETAIL
SCALE: NOT TO SCALE

C501 PAVEMENT DETAILS
SCALE:NTS

CLIENT AND PROJECT

North Carolina Department of Transportation

SCO ID NO.: 14-11006-01A

Division 8 Office Building

150 DOT Drive
Carthage, NC

DESIGNER

ANDRE JOHNSON ARCHITECT
PO BOX 14637
RALEIGH, NORTH CAROLINA 27620
TELEPHONE: 919.661.6935
MAIL: info@andrejohnsonarchitect.com

© 2015 Andre Johnson Architect, PLLC
Duplication or reproduction by any means without the express written consent of Andre L. Johnson, Architect is a violation of Federal and international law. The information contained on this document is the intellectual property of Andre L. Johnson, Architect and all rights thereto are Reserved. For exceptions, refer to the Owner-Architect Agreement.

PEAK Engineering & Design
5448 Apex Peakway #368 | Apex, NC 27502
ph: 919.439.0100 fax: 919.439.6411
www.PeakEngineeringDesign.com
NC License #P-0673

ISSUE

No.	Date	Description

SHEET INFO

DETAILS

C501

PROJECT NO: 140701
DATE: August 5, 2016
BID DOCUMENTS

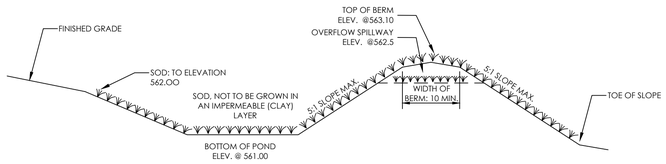

NOTES:
-ALL SEDIMENT AND EROSION CONTROL MEASURES SHALL BE IN PLACE, AND SLOPES STABILIZED PRIOR TO COMPLETION OF INFILTRATION BASIN.
-REMOVE ALL SEDIMENT FROM BASIN PRIOR TO FINAL GRADING AND SOD INSTALLATION.
-IF FILL MATERIAL IS NECESSARY TO OBTAIN BOTTOM GRADE, BACKFILL SHALL BE OF ON-SITE MATERIAL AND NOT BE COMPACTED TO A DENSITY GREATER THAN EXISTING DENSITY. .

INFILTRATION BASIN CROSS SECTION
NOT TO SCALE

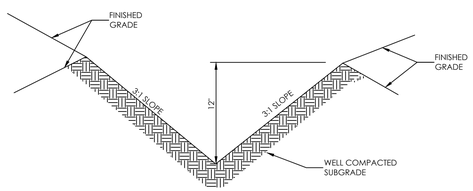

DRAINAGE DITCH
NOT TO SCALE

SILT FENCE COIR FIBER WATTLE BREAK DETAIL

PROJECT REFERENCE NO.	SHEET NO.
R-2502	EC-26
RW. SHEET NO.	
ROADWAY PROJ. ENGINEER	CONSULTANT ENGINEER

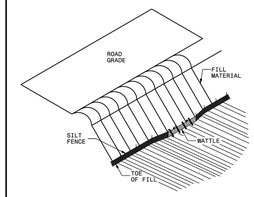

ISOMETRIC VIEW

NOTES:

USE MINIMUM 12 IN. DIAMETER COIR FIBER (COCONUT FIBER) WATTLE AND LENGTH OF 10 FT.

EXCAVATE A 1 TO 2 INCH TRENCH FOR WATTLE TO BE PLACED.

DO NOT PLACE WATTLE ON TOE OF SLOPE.

USE 2 FT. WOODEN STAKES WITH A 2 IN. BY 2 IN. NOMINAL CROSS SECTION.

INSTALL A MINIMUM OF 2 UPSLOPE STAKES AND 4 DOWNSLOPE STAKES AT AN ANGLE TO WEDGE WATTLE TO GROUND.

PROVIDE STAPLES MADE OF 0.125 IN. DIAMETER STEEL WIRE FORMED INTO A U SHAPE NOT LESS THAN 12" IN LENGTH.

INSTALL STAPLES APPROXIMATELY EVERY 1 LINEAR FOOT ON BOTH SIDES OF WATTLE AND AT EACH END TO SECURE IT TO THE SOIL.

WATTLE INSTALLATION CAN BE ON OUTSIDE OF THE SILT FENCE AS DIRECTED.

INSTALL TEMPORARY SILT FENCE IN ACCORDANCE WITH SECTION 1605 OF THE STANDARD SPECIFICATIONS.

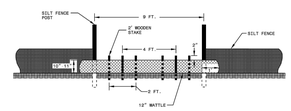

VIEW FROM SLOPE

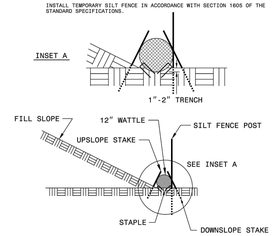

SIDE VIEW

DIVISION OF HIGHWAYS
STATE OF NORTH CAROLINA

PROJECT REFERENCE NO.	SHEET NO.
R-2502	EC-26
RW. SHEET NO.	
ROADWAY PROJ. ENGINEER	CONSULTANT ENGINEER

SOIL STABILIZATION TIMEFRAMES

SITE DESCRIPTION	STABILIZATION TIME	TIMEFRAME EXCEPTIONS
PERIMETER DIKES, SWALES, DITCHES AND SLOPES	7 DAYS	NONE
HIGH QUALITY WATER (HQW) ZONES	7 DAYS	NONE
SLOPES STEEPER THAN 3:1	7 DAYS	IF SLOPES ARE 10' OR LESS IN LENGTH AND ARE NOT STEEPER THAN 2:1, 14 DAYS ARE ALLOWED.
SLOPES 3:1 OR FLATTER	14 DAYS	7 DAYS FOR SLOPES GREATER THAN 50' IN LENGTH.
ALL OTHER AREAS WITH SLOPES FLATTER THAN 4:1	14 DAYS	NONE, EXCEPT FOR PERIMETERS AND HQW ZONES.

SKIMMER BASIN WITH BAFFLES DETAIL (EAST)

PROJECT REFERENCE NO.	SHEET NO.
R-2502	EC-26
RW. SHEET NO.	
ROADWAY PROJ. ENGINEER	CONSULTANT ENGINEER

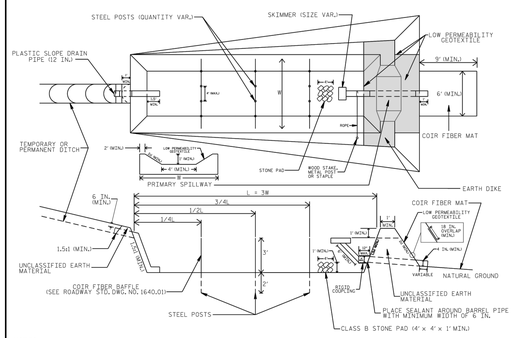

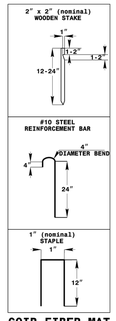

COIR FIBER MAT
ANCHOR OPTIONS

NOTES
1. SEED AND PLACE MATTING FOR EROSION CONTROL ON INTERIOR AND EXTERIOR SIDESLOPES.
2. LIMIT EARTH DIKE HEIGHT TO 5 FT.
3. FOR BASIN DEPTH OF 3 FT., THE MINIMUM BASIN WIDTH SHALL BE 9 FT.
4. DETERMINE PRIMARY SPILLWAY WEIR LENGTH (FT.) USING Q/0.6, WHERE Q IS FLOW RATE (CFS) INTO BASIN.
5. PLASTIC SLOPE DRAIN PIPE AT INLET OF BASIN MAY BE REPLACED BY FILTRATION GEOTEXTILE OR TARP AS DIRECTED.
6. LOW PERMEABILITY GEOTEXTILE FOR PRIMARY SPILLWAY SHALL BE ONE CONTINUOUS PIECE OF MATERIAL OR OVERLAPPED 18 IN. (MIN.).

NOT TO SCALE

CLIENT AND PROJECT

North Carolina
Department of
Transportation

SCO ID NO.: 14-11006-01A

**Division 8
Office Building**

150 DOT Drive
Carthage, NC

DESIGNER

ANDRE JOHNSON ARCHITECT
PO BOX 14637
RALEIGH, NORTH CAROLINA 27620
TELEPHONE: 919.661.6935
MAIL: info@andrejohnsonarchitect.com

© 2015 Andre Johnson Architect, PLLC
Duplication or reproduction by any means without the express written consent of Andre L. Johnson, Architect is a violation of Federal and international law. The information contained on this document is the intellectual property of Andre L. Johnson, Architect and all rights thereto are Reserved. For exceptions, refer to the Owner-Architect Agreement.

PEAK Engineering & Design
5448 Apex Peakway | Apex, NC 27502
ph: 919.439.0100 fax: 919.439.6411
www.PeakEngineeringDesign.com
NC License #P-0673

ISSUE

No.	Date	Description

SHEET INFO

DETAILS

C502

PROJECT NO: 140701
DATE: August 5, 2016
BID DOCUMENTS

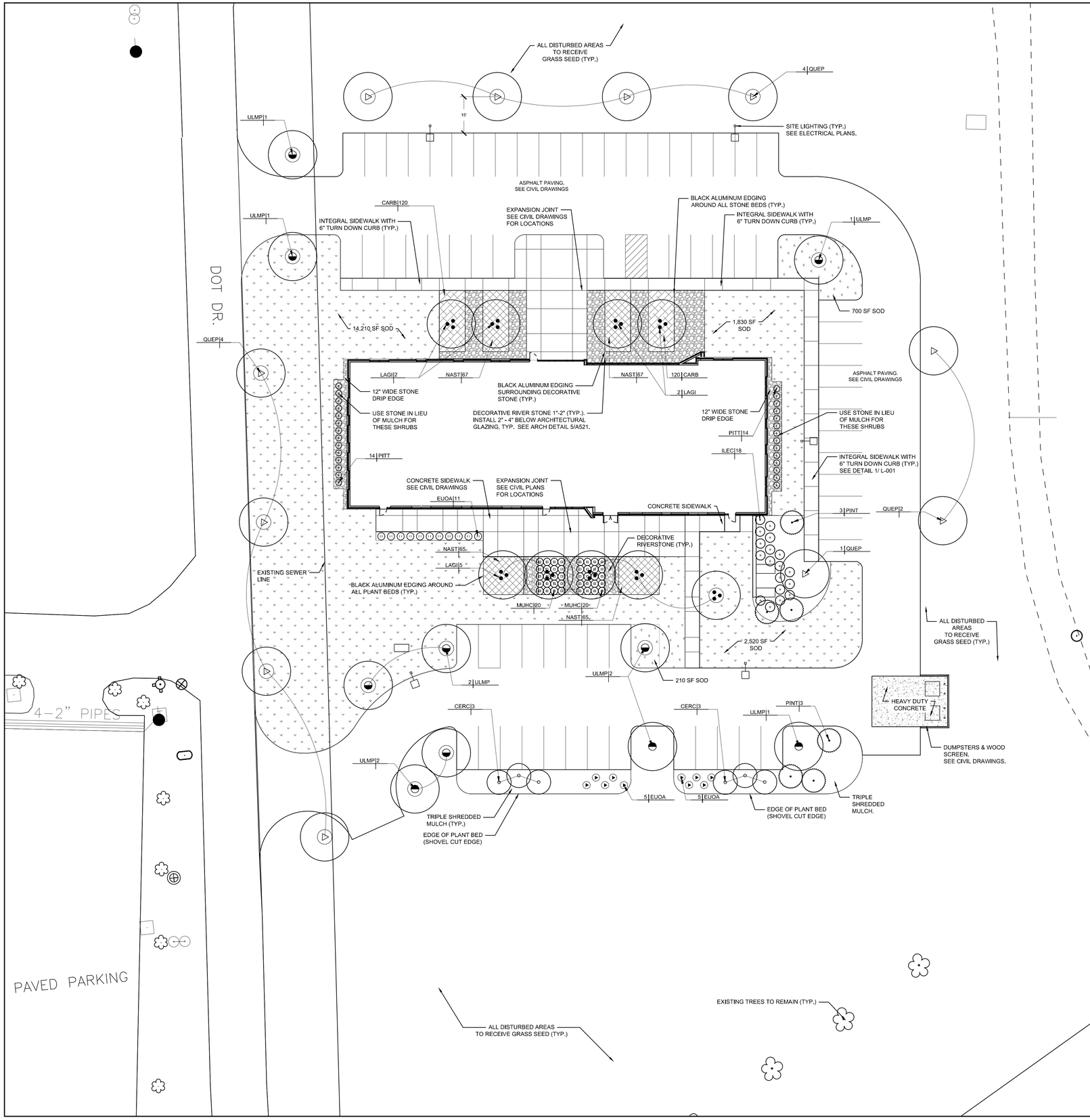

LEGEND

- SOD
- 4" THICK, MED BROOM FINISH CONCRETE (UNLESS OTHERWISE NOTED)
- DECORATIVE RIVERSTONE 1" - 2" COBBLES (DARK GRAY MEXICAN PEBBLE)

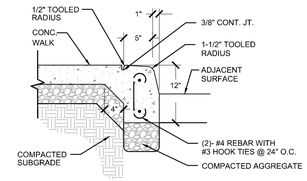

NOTE:
CURB HEIGHT SHALL BE 6" UNLESS OTHERWISE NOTED ON GRADING PLANS.

1 INTEGRAL CURB & SIDEWALK
SECTION
NTS

PLANT SCHEDULE

TREES	BOTANICAL NAME	COMMON NAME	CONT	CAL	SIZE	QTY	REMARKS
CERC	Cercis canadensis `Forest Pansy` TM	Forest Pansy Redbud	B & B	1.5"Cal	6`-8`	6	
LAGI	Lagerstroemia x `Tuskegee`	Tuskegee Crape Myrtle Multi-Trunk	B & B		10`-12`	9	3 Canes Min.
PINT	Pinus taeda	Loblolly Pine	B & B		6`-8`	6	
QUEP	Quercus phellos `Hightower`	Willow Oak	B & B	2.5"Cal		11	
ULMP	Ulmus parvifolia `Allee`	Allee Lacebark Elm	B & B	2.5"Cal		10	

SHRUBS	BOTANICAL NAME	COMMON NAME	CONT	HGT.	QTY	REMARKS
EUOA	Euonymus alatus `Compactus`	Compact Burning Bush	3 gal		21	
ILEC	Ilex crenata `Chesapeake`	Chesapeake Japanese Holly	3 gal		18	
MUHC	Muhlenbergia capillaris `Autumn Blush`	Pink Muhly	3 gal		40	
PITT	Pittosporum tobira `Wheeler's Dwarf`	Wheeler's Dwarf Pittosporum	2 gal		28	

GROUND COVERS	BOTANICAL NAME	COMMON NAME	CONT	SPACING	QTY	REMARKS
	Carex bicknellii	Prairie Sedge	1 gal	18" o.c.	240	
	Nassella tenuissima `Pony Tails`	Mexican Feathergrass	3 gal	24" o.c.	264	
SOD	TIFWAY Bermuda	TIFWAY Bermuda	SOD		19,260 SF	

CLIENT AND PROJECT

NORTH CAROLINA DEPARTMENT OF TRANSPORTATION

SCO ID NO.: 14-11006-01A

NEW DIVISION 8 OFFICE BUILDING

150 DOT DRIVE
CARTHAGE, NC 28327

DESIGNER

ANDRE JOHNSON ARCHITECT

PO BOX 14637
RALEIGH, NORTH CAROLINA 27620
TELEPHONE: 919.661.6935
MAIL: info@andrejohnsonarchitect.com

© 2015 Andre Johnson Architect, PLLC
Duplication or reproduction by any means without the express written consent of Andre L. Johnson, Architect is a violation of Federal and international law. The information contained on this document is the intellectual property of Andre L. Johnson, Architect and all rights thereto are Reserved. For exceptions, refer to the Owner-Architect Agreement.

CONSULTANT

STEWART
421 FAYETTEVILLE ST., STE 400
RALEIGH, NC 27601
T 919.380.8750
FIRM LICENSE #: C-1051
www.stewartinc.com
PROJECT # C15005

REGISTRATION

NORTH CAROLINA REGISTERED LANDSCAPE ARCHITECT 1604 MICHAEL P. TARRANT
5.5.16
FIRM LICENSE # C-1051

ISSUE

No.	Date	Description

SHEET INFO

Landscape Plan

L001

PROJECT NO: P1423.00
DATE: AUGUST 5, 2016
BID SET

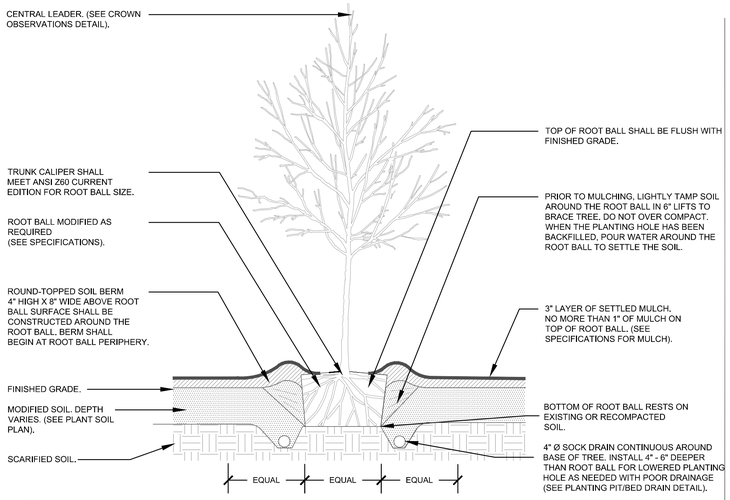

1 TREE (TYPICAL)
SECTION — NTS

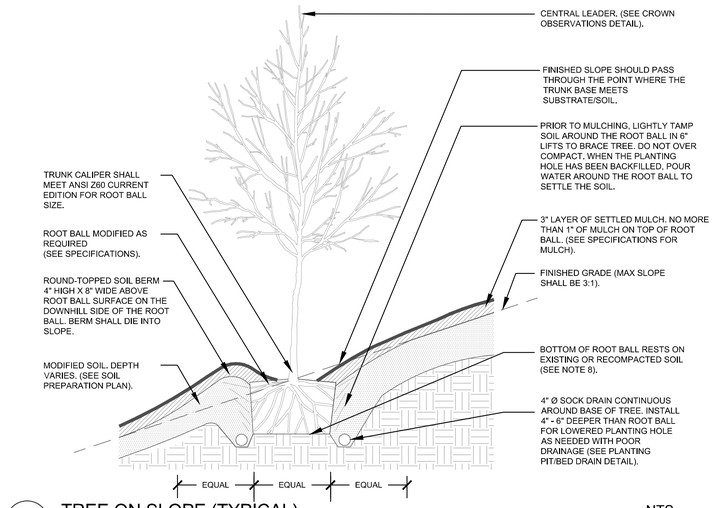

2 TREE ON SLOPE (TYPICAL)
SECTION — NTS

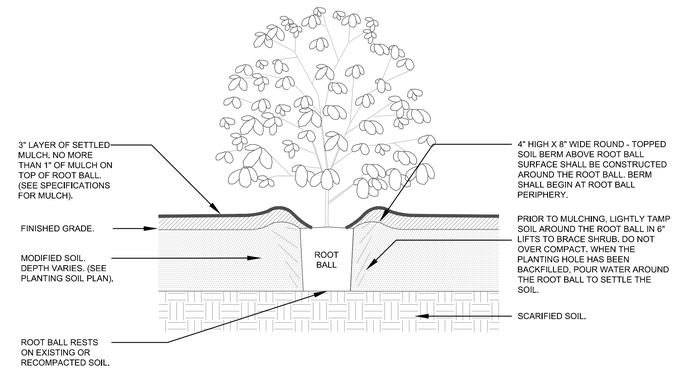

3 SHRUB (TYPICAL)
SECTION — NTS

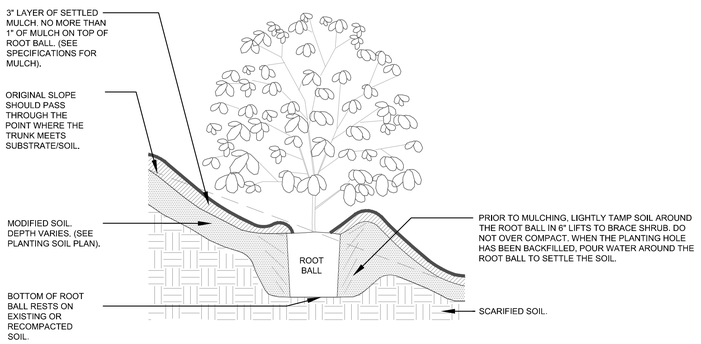

4 SHRUB ON SLOPE (TYPICAL)
SECTION — NTS

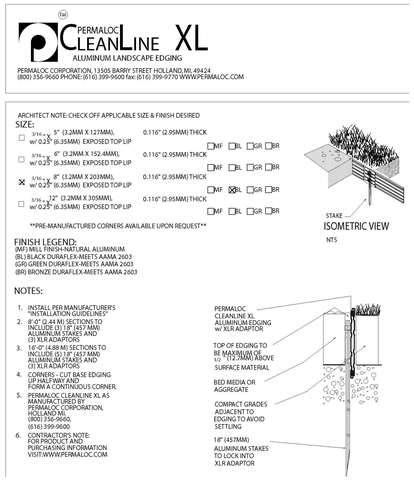

5 LANDSCAPE EDGING
SECTION — NTS

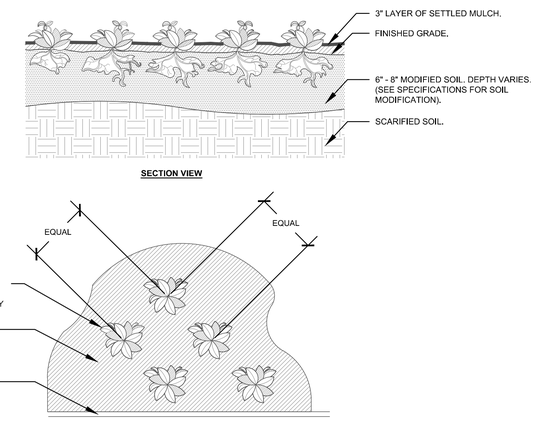

6 GROUNDCOVER PLANTING (TYPICAL)
PLAN — NTS

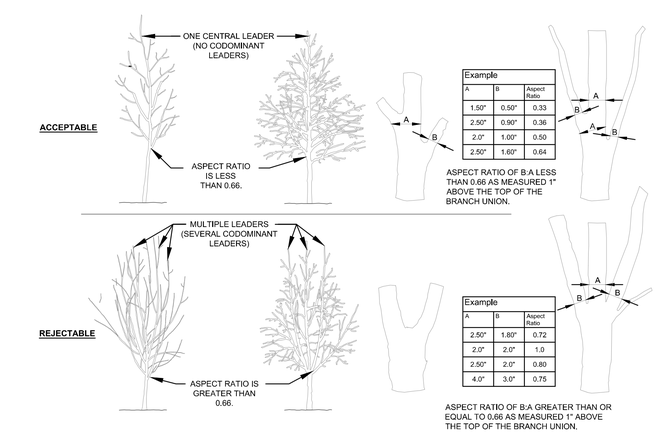

7 CROWN OBSERVATIONS - HIGH BRANCHED
SECTION — NTS

NOTES:

1. SEE PLANTING LEGEND FOR GROUNDCOVER SPECIES, SIZE AND SPACING DIMENSION.
2. SMALL ROOTS (⅛" OR LESS) THAT GROW AROUND, UP OR DOWN THE ROOT BALL PERIPHERY ARE CONSIDERED A NORMAL CONDITION IN CONTAINER PRODUCTION AND ARE ACCEPTABLE, HOWEVER THEY SHOULD BE ELIMINATED AT THE TIME OF PLANTING. ROOTS ON THE PERIPHERY CAN BE REMOVED AT THE TIME OF PLANTING (SEE ROOT BALL SHAVING DETAIL).
3. SETTLE SOIL AROUND ROOT BALL OF EACH GROUNCOVER PRIOR TO MULCHING.
4. WHEN GROUNDCOVER PLANTINGS ARE USED IN MASSES, ENTIRE BED SHALL BE EXCAVATED AND TILLED WITH SOIL AMENDMENTS PER SPECIFICATIONS.
5. CONTRACTORS SHALL ASSURE PERCOLATION OF A ALL PLANTING PITS PRIOR TO INSTALLATION.

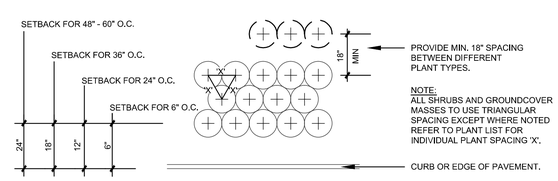

8 SHRUB AND GROUNDCOVER SPACING
PLAN — NTS

PLANTING NOTES:

1. DO NOT STAKE TREES EXCEPT WHERE SPECIFIED BY LANDSCAPE ARCHITECT. STAKING IS REQUIRED FOR TREES PLANTED ON SLOPES.
2. WHERE SEVERAL TREES WILL BE PLANTED CLOSE TOGETHER SUCH THAT THEY WILL LIKELY SHARE ROOT SPACE, TILL IN SOIL AMENDMENTS TO A DEPTH OF 4-6" OVER THE ENTIRE AREA.
3. FOR CONTAINER GROWN TREES, USE FINGERS OR SMALL HAND TOOLS TO PULL THE ROOTS OUT OF THE OUTER LAYER OF POTTING SOIL. THEN CUT OR PULL APART ANY ROOTS CIRCLING THE PERIMETER OF THE CONTAINER.
4. FOR FIELD GROWN TREES, CUT BURLAP, ROPE AND WIRE BASKET AWAY FROM TOP AND SIDES OF ROOT BALL.
5. THOROUGHLY SOAK THE TREE ROOT BALL AND ADJACENT PREPARED SOIL SEVERAL TIMES DURING THE FIRST MONTH AFTER PLANTING AND REGULARLY THROUGHOUT THE FOLLOWING TWO SUMMERS.
6. THE PLANTING PROCESS IS SIMILAR FOR DECIDUOUS AND EVERGREEN TREES.
7. DO NOT WRAP TRUNK; MARK NORTH SIDE OF TREE IN THE NURSERY AND LOCATE TO THE NORTH IN THE FIELD.
8. WIDTH OF PLANTING HOLE IS 3X ROOT BALL AT THE SURFACE, SLOPING TO 2X THE ROOT BALL DIAMETER AT THE DEPTH OF THE ROOT BALL.
9. BEFORE PLANTING, ADD 3-4" OF WELL COMPOSTED LEAVES, RECYCLED YARD WASTE OR OTHER COMPOST AND TILL INTO TOP 6" OF PREPARED SOIL. ADD COMPOST AT 20-35% BY VOLUME TO BACKFILL.
10. PERFORM PERCOLATION TEST FOR EACH TREE PIT TO CONFIRM THAT WATER DRAINS OUT OF THE SOIL. PROVIDE GRAVEL SUMP FILTER FABRIC & VENT PIPE IF DRAINAGE DOES NOT OCCUR WITHIN 24 HOURS. INCLUDE ALL SUMPS IN BASE BID. SHOULD SUMPS NOT BE NECESSARY AFTER PERCOLATION TEST, PROVIDE CHANGE ORDER DEDUCT TO OWNER.
11. IF PLANTING HOLES ARE DUG WITH A LARGE AUGER BREAKING DOWN THE SIDES WITH A SHOVEL CAN ELIMINATE GLAZING AND CREATE THE PREFERRED SLOPING SIDE.
12. TREES SHALL HAVE SINGLE LEADERS. TREES WITH 2 LEADERS WILL BE REJECTED.
13. DO NOT PLACE MULCH IN CONTACT WITH TRUNK.
14. PROVIDE GATOR BAGS FOR ALL TREES WHERE IRRIGATION IS NOT PROVIDED.

9 PLANTING NOTES

CLIENT AND PROJECT

NORTH CAROLINA DEPARTMENT OF TRANSPORTATION

SCO ID NO.: 14-11006-01A

NEW DIVISION 8 OFFICE BUILDING

150 DOT DRIVE
CARTHAGE, NC 28327

DESIGNER

ANDRE JOHNSON ARCHITECT
PO BOX 14637
RALEIGH, NORTH CAROLINA 27620
TELEPHONE: 919.661.6935
MAIL: info@andrejohnsonarchitect.com

© 2015 Andre Johnson Architect, PLLC
Duplication or reproduction by any means without the express written consent of Andre L. Johnson, Architect is a violation of Federal and international law. The information contained on this document is the intellectual property of Andre L. Johnson, Architect and all rights thereto are Reserved. For exceptions, refer to the Owner-Architect Agreement.

CONSULTANT

STEWART
421 FAYETTEVILLE ST, STE 400
RALEIGH, NC 27601
T 919.380.8750
FIRM LICENSE #: C-1051
www.stewartinc.com
PROJECT #: C15009

REGISTRATION

FIRM LICENSE #: C-1051

ISSUE

No.	Date	Description

SHEET INFO

Planting Details

L002

PROJECT NO: P1423.00
DATE: AUGUST 5, 2016
BID SET

GENERAL

1. THESE GENERAL NOTES ARE NOT INTENDED TO REPLACE SPECIFICATIONS. SEE SPECIFICATIONS FOR REQUIREMENTS IN ADDITION TO GENERAL NOTES.
2. THE STRUCTURAL DRAWINGS AND SPECIFICATIONS REPRESENT THE FINISHED STRUCTURE, AND, EXCEPT WHERE SPECIFICALLY SHOWN, DO NOT INDICATE THE METHOD OR MEANS OF CONSTRUCTION. THE CONTRACTOR SHALL SUPERVISE AND DIRECT THE WORK AND SHALL BE SOLELY RESPONSIBLE FOR ALL CONSTRUCTION MEANS, METHODS, PROCEDURES, TECHNIQUES, AND SEQUENCE. ALL APPLICABLE SAFETY REGULATIONS TO BE FOLLOWED STRICTLY.
3. THE STRUCTURE HAS BEEN DESIGNED TO RESIST DESIGN LOADS ONLY AS A COMPLETED STRUCTURE. APPLICATIONS OF CONSTRUCTION LOADS TO THE PARTIALLY COMPLETED STRUCTURE SHALL BE CONSIDERED BY THE CONTRACTOR AND SO INCLUDED IN THE DESIGN OF SHORING, BRACING, FORMWORK, AND ANY OTHER SUPPORTING ELEMENTS PROVIDED FOR CONSTRUCTION OF THE STRUCTURE. DURING ERECTION AND UNTIL ALL PERMANENT CONNECTIONS ARE MADE, THE CONTRACTOR MUST PROVIDE TEMPORARY BRACING FOR THE STRUCTURE IN ALL DIRECTIONS.
4. THE GENERAL CONTRACTOR SHALL CHECK AND VERIFY ALL DIMENSIONS AND GRADE CONDITIONS (BOTH NEW AND EXISTING), REPORTING ANY DISCREPANCIES TO THE ARCHITECT PRIOR TO ORDERING MATERIALS OR PROCEEDING WITH ANY PHASE OF THE WORK.
5. THE CONTRACTOR SHALL COMPARE STRUCTURAL SECTIONS WITH ARCHITECTURAL SECTIONS AND REPORT ANY DISCREPANCY TO THE ARCHITECT PRIOR TO FABRICATION OR INSTALLATION OF STRUCTURAL MEMBERS.
6. DO NOT SCALE DIMENSIONS FROM DRAWINGS. THE CONTRACTOR SHALL REQUEST, FROM THE ARCHITECT, NECESSARY DIMENSIONS NOT SHOWN ON THE DRAWINGS.
7. IF ANY BIDDER IS IN DOUBT AS TO THE INTENT OF THE PLANS OR SPECIFICATIONS, THEY SHALL REQUEST AN INTERPRETATION FROM THE ARCHITECT IN WRITING AT LEAST TEN (10) DAYS PRIOR TO THE SCHEDULED BID DATE.
8. PRINCIPAL OPENINGS IN THE STRUCTURE ARE SHOWN ON THESE DRAWINGS. THE GENERAL CONTRACTOR SHALL EXAMINE THE ARCHITECTURAL MECHANICAL, ELECTRICAL, AND PLUMBING DRAWINGS FOR REQUIRED OPENINGS AS THEY SHALL BE PROVIDED FOR WHETHER SHOWN ON THESE DRAWINGS OR NOT. GENERAL CONTRACTOR SHALL VERIFY SIZE AND LOCATION OF ALL OPENINGS WITH ALL SUB-CONTRACTORS PRIOR TO CONSTRUCTION.
9. SEE ARCHITECTURAL DRAWINGS FOR FLOOR ELEVATIONS, FLOOR SLOPES, AND THE LOCATION OF DEPRESSED FLOOR AREAS.
10. WHERE A CONFLICT BETWEEN DRAWINGS AND SPECIFICATIONS OCCUR THE MORE STRINGENT REQUIREMENT SHALL APPLY.
11. WHERE A DETAIL IS SHOWN FOR ONE CONDITION, IT SHALL APPLY FOR ALL LIKE OR SIMILAR CONDITIONS EVEN THOUGH NOT SPECIFICALLY REFERENCED ON THE DRAWINGS.

DESIGN CRITERIA

1. APPLICABLE CODES:
   - A. 2012 NORTH CAROLINA STATE BUILDING CODE (2009 INTERNATIONAL BUILDING CODE WITH REVISIONS)
   - B. MINIMUM DESIGN LOADS FOR BUILDINGS AND OTHER STRUCTURES (ASCE 7-05)
   - C. BUILDING CODE REQUIREMENTS FOR STRUCTURAL CONCRETE (ACI 318-08)
   - D. BUILDING CODE REQUIREMENTS FOR MASONRY STRUCTURES (ACI 530-08)
   - E. STEEL CONSTRUCTION MANUAL, 13TH EDITION (AISC 325-05)
   - F. SPECIFICATION FOR STRUCTURAL STEEL BUILDINGS (AISC 360-05)
   - G. AMERICAN WELDING SOCIETY STRUCTURAL WELDING CODE (D1.1-04)
   - H. DESIGN OF COLD-FORMED STEEL STRUCTURAL MEMBERS (AISI S100-07)
2. LIVE LOAD:

	UNIFORM (PSF)	CONCENTRATED (LB)
SLAB ON GRADE	100	2,000
MECHANICAL	150	N/A
ROOF	20	300

3. OCCUPANCY CATEGORY: II
4. SNOW LOAD:

GROUND SNOW LOAD	Pg = 15 PSF
IMPORTANCE FACTOR	Is = 1.0
SNOW EXPOSURE FACTOR	Ce = 1.0
THERMAL FACTOR	Ct = 1.0
FLAT SNOW ROOF LOAD	Pf = 1.0 PSF

5. WIND LOAD:

BASIC DESIGN WIND VELOCITY	V = 95 MPH	
IMPORTANCE FACTOR	Iw = 1.0	
EXPOSURE CATEGORY	B	
INTERNAL PRESSURE COEFFICIENTS	±0.18	
BASE SHEAR	Vx = 12.0k	Vy =29.0k

COMPONENTS AND CLADDING - ALL BUILDING COMPONENTS AND CLADDING ENGINEERED BY THE COMPONENT MANUFACTURER ARE TO BE DESIGNED BY THE MANUFACTURER'S ENGINEER FOR WIND LOADS DETERMINED PER THE NORTH CAROLINA STATE BUILDING CODE FOR THE BASIC DESIGN WIND VELOCITY, IMPORTANCE FACTOR, AND EXPOSURE LISTED ABOVE.

6. SEISMIC LOAD (2008 USGS SEISMIC DESIGN MAPS):

DESIGN METHOD - EQUIVALENT LATERAL FORCE PROCEDURE		
Ss	20.9 %g	
S1	9.5 %g	
Sds	22.3 %g	
Sd1	15.2 %g	
IMPORTANCE FACTOR	Ie = 1.0	
SITE CLASS	D	
SEISMIC RESPONSE COEFFICIENT	Csx = 0.074	Csy = 0.074
SEISMIC DESIGN CATEGORY	C	
SEISMIC FORCE-RESISTING SYSTEM - STEEL SYSTEMS NOT SPECIFICALLY DETAILED FOR SEISMIC RESISTANCE, EXCLUDING CANTILEVER COLUMN SYSTEMS		
RESPONSE MODIFICATION COEFFICIENT	Rx = 3	Ry = 3
DEFLECTION AMPLIFICATION FACTOR	Cdx = 3	Cdy = 3
BASE SHEAR	Vx = 30.1k	Vy = 30.1k

NONSTRUCTURAL COMPONENT ANCHORAGE - ALL ARCHITECTURAL, ELECTRICAL, MECHANICAL, AND PLUMBING COMPONENTS ARE TO BE ATTACHED AS REQUIRED BY ASCE 7 CHAPTER 13, "SEISMIC DESIGN REQUIREMENTS FOR NONSTRUCTURAL COMPONENTS". EACH INDIVIDUAL CONTRACTOR RESPONSIBLE FOR THE COMPONENT MUST PROVIDE PROJECT SPECIFIC DESIGN AND DOCUMENTATION PREPARED BY AN ENGINEER LICENSED IN THE STATE OF NORTH CAROLINA. CHAPTER 13 DEFINES THE FORCE REQUIRED TO SUPPORT THE COMPONENT FOR THE ANCHORAGE AND BRACING. THE COST OF PREPARING THIS INFORMATION AND DESIGN SHALL BE INCLUDED IN EACH CONTRACTOR'S BID THAT IS PROVIDING THE COMPONENT.

7. FUTURE LOADS:
   UNLESS SPECIFICALLY NOTED, THERE ARE NO PROVISIONS MADE FOR FUTURE FLOORS, ROOFS, OR OTHER LOADS.

FOUNDATIONS

1. FOUNDATION DESIGN IS BASED ON THE GEOTECHNICAL INVESTIGATION REPORT BY ECS CAROLINAS, LLP DATED 4/14/2015 (ECS PROJECT #33.3225). THE DESIGN ALLOWABLE SOIL BEARING PRESSURE IS 3,000 PSF, BASED ON THIS REPORT.
2. BASED ON THE GEOTECHNICAL INVESTIGATION REPORT, UNDERCUTTING MAY BE REQUIRED TO REMOVE ORGANIC DEBRIS UNDER THE BUILDING PAD; SEE REPORT FOR ANTICIPATED UNDERCUT LOCATION AND ADDITIONAL INFORMATION.
3. FOOTINGS SHALL BE CARRIED TO LOWER ELEVATIONS THAN THOSE SHOWN ON THE DRAWINGS IF REQUIRED BY THE GEOTECHNICAL ENGINEER OR TESTING LAB TO REACH SOIL CAPABLE OF PROVIDING THE DESIGN ALLOWABLE SOIL BEARING PRESSURE.
4. THE SUBGRADE AND UNDERFLOOR FILL SHALL BE PREPARED TO A POINT THAT EXTENDS 3'-0" MINIMUM BEYOND THE LIMITS OF THE FOUNDATION.
5. MINIMUM SUBGRADE PREPARATION REQUIREMENTS ARE AS FOLLOWS: COMPACT ALL FILL UNDER BUILDING TO 98% MAXIMUM DENSITY AS DETERMINED BY ASTM D698. PLACE IN LAYERS OF 8" MAXIMUM LOOSE THICKNESS. VERIFY FIELD DENSITY, ASTM D1556, WITH AT LEAST ONE TEST PER 2,000 SQUARE FEET PER LAYER. SEE SPECIFICATIONS FOR OTHER TESTING REQUIREMENTS.
6. WALLS RETAINING SOIL SHALL BE TEMPORARILY BRACED DURING BACKFILLING AND UNTIL ALL SUPPORTING SOIL AND SLABS ARE IN PLACE AND ARE AT DESIGN STRENGTH UNLESS NOTED OTHERWISE ON PLANS AND DETAILS.
7. UTILITY LINES SHALL NOT BE PLACED THROUGH OR BELOW FOUNDATIONS WITHOUT APPROVAL OF THE STRUCTURAL ENGINEER. CONTRACTOR SHALL SUBMIT DETAILED DRAWINGS OF ALL SUCH CONDITIONS PRIOR TO CONSTRUCTION.

CONCRETE/REINFORCING STEEL

1. CONCRETE COMPRESSIVE STRENGTH IN 28 DAYS:
   SLAB ON GRADE, FOOTINGS — 3,000 PSI, NORMAL WEIGHT
2. REINFORCING:
   TYPICAL - ASTM A615, GRADE 60
   REINFORCING TO BE WELDED - ASTM A706
   WELDED WIRE FABRIC - ASTM A185 (FLAT SHEETS ONLY)
3. GROUT UNDER BASE PLATES TO BE HIGH STRENGTH (5,000 PSI), NON-SHRINK.
4. REFER TO THE DRAWINGS FOR REINFORCING LAP REQUIREMENTS. WHERE LAP SPLICES ARE NOT SHOWN, LAP PER ACI 318 OR CRSI STANDARDS.
5. LAP WELDED WIRE FABRIC SHEETS 8" MINIMUM.
6. CLEAR COVER FROM FACE OF CONCRETE:
   CAST IN PLACE CONCRETE (MEASURE TO OUTERMOST REINFORCING) -

CONCRETE CAST AGAINST AND EXPOSED TO EARTH	3"
CONCRETE EXPOSED TO EARTH/WEATHER	2" FOR #6 BARS AND LARGER
	1 1/2" ELSE
CONCRETE NOT EXPOSED TO EARTH/WEATHER	3/4" FOR SLABS AND WALLS

7. PROVIDE REINFORCING IN SLABS ON GRADE, 1-1/2" FROM TOP OF SLAB:
   4" SLABS — 6x6-W2.1xW2.1
8. WALL FOOTING REINFORCING SHALL BE CONTINUOUS THROUGH ADJACENT COLUMN FOOTINGS.
9. BAR SUPPORTS FOR CONCRETE EXPOSED TO VIEW SHALL HAVE PLASTIC COATED LEGS OR BE HOT DIP GALVANIZED AFTER FABRICATION.
10. MECHANICAL AND ELECTRICAL CONDUIT IN SLABS ON GRADE SHALL RUN UNDER TOP LAYER OF SLAB REINFORCING. PROVIDE A MINIMUM OF 1-1/2" CLEAR BETWEEN CONDUITS AND BETWEEN REINFORCING AND ADJACENT CONDUITS PARALLEL TO REINFORCING. IF MAXIMUM SIZE OF CONDUIT EXCEEDS ONE THIRD OF THE SLAB DEPTH, ADDITIONAL FRAMING OR REINFORCING MAY BE NECESSARY AT ENGINEER'S DISCRETION.
11. HEADED CONCRETE ANCHORS SHALL CONFORM TO THE REQUIREMENTS OF ASTM A108, GRADES 1010, 1015, 1017, OR 1020. STUDS SHALL BE AUTOMATICALLY END WELDED IN THE SHOP OR FIELD IN ACCORDANCE WITH THE MANUFACTURER'S RECOMMENDATIONS.
12. EMBED PLATES MUST BE SET IN THE FORM BEFORE POURING CONCRETE, NOT PLACED INTO TOP OF WET CONCRETE. THE CONTRACTOR SHALL CONTACT THE ARCHITECT FOR CORRECTIVE DETAILS FOR ANY EMBED PLATES LEFT OUT OF CONCRETE POURS.
13. FOR SLABS ON GRADE, SLAB AND FOOTING REINFORCING SHALL BE HELD IN PLACE BY BAR SUPPORTS WITH SAND PLATES, OR PRECAST CONCRETE BAR SUPPORTS AS DESCRIBED IN CHAPTER 3 OF THE CRSI MANUAL OF STANDARD PRACTICE. BAR SUPPORTS SHALL BE SPACED AT A MAXIMUM OF 4'-0"OC BOTH WAYS. ROCKS, CMU, OR CLAY BRICK WILL NOT BE USED AS SUPPORTS.
14. REBAR SHALL NOT BE HEATED WITH A TORCH IN THE FIELD.
15. THE CONTRACTOR SHALL NOTIFY THE ARCHITECT/ENGINEER FAR ENOUGH IN ADVANCE (48 HOURS) OF EACH CONCRETE POUR TO ALLOW AMPLE TIME TO CHECK THE LAYOUT OF THE STEEL BEFORE THE BEGINNING OF THE ACTUAL POUR, BUT NOT PRIOR TO 90% OF THE STEEL HAVING BEEN PLACED.

CONCRETE CONSTRUCTION JOINTS

1. CONTRACTOR SHALL PROVIDE NECESSARY CONSTRUCTION JOINTS IN MONOLITHIC CONCRETE POURS SO THAT THE QUALITY OF PLACEMENT AND FINISH MEETS THE REQUIREMENTS OF PLANS AND SPECIFICATIONS. THE CONTRACTOR SHALL SUBMIT A PLAN SHOWING THE LOCATION OF ALL CONSTRUCTION JOINTS TO THE STRUCTURAL ENGINEER FOR APPROVAL.
2. THERE SHALL BE NO HORIZONTAL CONSTRUCTION JOINTS IN CONCRETE POURS. ALL VERTICAL CONSTRUCTION JOINTS IN SLABS AND BEAMS SHALL BE MADE WITH BULKHEADS. ADDITIONAL REINFORCING AT CONSTRUCTION JOINTS SHALL BE AS SPECIFIED BY THE STRUCTURAL ENGINEER. SEE TYPICAL CONSTRUCTION JOINT DETAILS.

STRUCTURAL MASONRY

1. LOAD-BEARING MASONRY WALLS, PILASTERS, PIERS, RETAINING WALLS, FOUNDATION WALLS AND ANY OTHER MASONRY SO DESIGNATED ON DRAWINGS IS CONSIDERED HERE TO BE STRUCTURAL MASONRY.
2. REQUIRED COMPRESSIVE STRENGTH OF MASONRY UNITS:
   SOLID CLAY UNITS - 6,200 PSI
   CONCRETE UNITS - 1,900 PSI ON NET AREA
3. CONCRETE MASONRY UNITS (CMU) SHALL BE LIGHT WEIGHT (105 PCF) GRADE N, CONFORMING TO ASTM C90. REFER TO ARCHITECTURAL DRAWINGS AND SPECIFICATIONS FOR UNIT SIZE, FACE, COLOR, JOINTING, ETC.
4. MORTAR SHALL BE TYPE S, ASTM C270.
5. GROUT FOR REINFORCED MASONRY SHALL BE FINE GROUT, ASTM C476. MINIMUM 28-DAY COMPRESSIVE STRENGTH SHALL BE 2000 PSI.
6. MINIMUM 28-DAY COMPRESSIVE STRENGTH (f'm) OF THE MASONRY WALLS SHALL BE 1500 PSI. MASONRY STRENGTH SHALL BE DETERMINED BY THE UNIT STRENGTH METHOD OR THE PRISM TEST METHOD AS DESCRIBED BY ACI 530.
7. REINFORCING:
   TYPICAL - ASTM A615, GRADE 60.
   ALL REINFORCING TO BE WELDABLE - ASTM A706.
8. REFER TO THE DRAWINGS FOR REINFORCING LAP TYPICAL DETAIL AND SCHEDULE REQUIREMENTS. WHERE LAP SPLICES ARE NOT SHOWN, LAP 72 BAR DIAMETERS PER ACI 530 AS MODIFIED BY THE STATE BUILDING CODE, UNLESS NOTED ON DRAWINGS.
9. MAXIMUM HEIGHT TO WHICH MASONRY SHALL BE LAID BEFORE GROUTING IS 5 FEET ABOVE CONSTRUCTION SURFACE OR PREVIOUSLY GROUTED MASONRY. IF GROUT POUR HEIGHT EXCEEDS 5 FEET, THEN "HIGH LIFT" GROUTING PROCEDURE MUST BE FOLLOWED. PROVIDE CLEANOUT OPENINGS AT THE BOTTOM OF EACH GROUT LIFT. CLEANOUT OPENINGS SHALL BE PROVIDED AT EACH CELL TO BE FILLED WITH GROUT.
10. ALL GROUT PLACED OVER 12" IN HEIGHT SHALL BE MECHANICALLY CONSOLIDATED DURING GROUTING. GROUT SHALL BE RECONSOLIDATED BY MECHANICAL VIBRATION AFTER INITIAL WATER LOSS AND SETTLEMENT HAS OCCURRED.
11. MAXIMUM GROUT LIFT (GROUT POURED IN ONE CONTINUOUS OPERATION) IS 5 FEET. THIS LIMIT ALSO APPLIES TO "HIGH LIFT" GROUTING.
12. REINFORCE MASONRY WHERE SHOWN ON STRUCTURAL DRAWINGS. TIE REINFORCING IN POSITION AND PLACE GROUT AROUND REINFORCING. DO NOT PUSH REINFORCING DOWN INTO PREVIOUSLY PLACED GROUT FILL. SET BOLTS SIMILARLY.
13. TIE MASONRY WYTHES WITH HORIZONTAL REINFORCING AS SPECIFIED.
14. PROVIDE VERTICAL BARS, SIZE MATCHING WALL REINFORCING, AT ALL CORNERS, ENDS OF WALLS, EACH SIDE OF CONTROL JOINTS AND EACH SIDE OF WALL OPENINGS. TIE EACH BAR TO THE FOUNDATION WITH A MATCHING DOWEL. SEE ARCHITECTURAL DRAWINGS FOR LOCATIONS OF CONTROL JOINTS.
15. ALL CORNERS AND INTERSECTIONS OF STRUCTURAL MASONRY WALLS SHALL BE CONSTRUCTED BY INTERLOCKING COURSES.
16. ALL LINTELS TO BEAR 8" MINIMUM EACH SIDE OF OPENING, UNLESS NOTED OTHERWISE.
17. GROUT ALL MASONRY WALLS AND CAVITY BELOW GRADE SOLID. GROUT ALL WALLS ABOVE GRADE AT THE REINFORCED CELLS (MIN) OR AS INDICATED IN SPECIFIC SECTIONS.
18. ONE 3/4"Ø (MAXIMUM) VERTICAL CONDUIT ALLOWED IN ANY REINFORCED CELL PROVIDED 1" CLEAR IS MAINTAINED BETWEEN REINFORCING AND CONDUIT. NO OTHER VERTICAL OR HORIZONTAL CONDUITS, PIPES, OR SLEEVES SHALL BE LOCATED IN REINFORCED CELLS UNLESS OTHERWISE APPROVED BY THE STRUCTURAL ENGINEER. CONTRACTOR SHALL COORDINATE LAYOUT TO AVOID REINFORCED CELLS.

STRUCTURAL STEEL

1. STRUCTURAL STEEL:
   WIDE FLANGE SHAPES (W SECTIONS) - ASTM A992, GRADE 50 (FY=50 KSI)
   CHANNELS, ANGLES, RODS, AND BARS - A36 (FY=36 KSI)
   PLATES - ASTM A572, GRADE 50 (FY=50 KSI) OR ASTM A36 (FY=36 KSI)
   SQUARE AND RECTANGULAR TUBES - ASTM A500, GRADE B (FY=46 KSI)
   PIPES - ASTM A53, GRADE B (FY=35 KSI)
2. ANCHOR BOLTS AND THREADED RODS SHALL CONFORM TO ASTM F1554, GRADE 36.
3. DESIGN, FABRICATION AND ERECTION SHALL BE AS PER SPECIFICATION FOR STRUCTURAL STEEL BUILDINGS (AISC 360-05).
4. BEAM SIMPLE SHEAR CONNECTIONS NOT DETAILED ON STRUCTURAL DRAWINGS SHALL BE DESIGNED BY STEEL SUPPLIER FOR LOADS SHOWN ON DRAWINGS OR FOR REACTIONS DETERMINED BY USING THE ALLOWABLE UNIFORM LOAD AS TABULATED IN PART 3 OF THE AISC MANUAL OF STEEL CONSTRUCTION FOR THE SECTION, SPAN AND STRENGTH OF STEEL SPECIFIED. CONNECTIONS SHALL BE MADE WITH 3/4"Ø BOLTS, ASTM A325 TIGHTENED TO A SNUG-TIGHT CONDITION PER AISC REQUIREMENTS.
5. WHERE STEEL MEMBERS ARE WELDED AND NO SIZE IS SPECIFIED, PROVIDE FULL LENGTH FILLET WELDS BOTH SIDES OF MEMBER. WELD SIZES SHALL BE AS FOLLOWS UNLESS NOTED OTHERWISE:

MEMBER THICKNESS	WELD SIZE
3/16"	3/16"
1/4"	3/16"
5/16"	3/16"
3/8"	1/4"
7/16"	1/4"
1/2"	5/16"
9/16"	3/8"
5/8"	7/16"

6. SPLICING OF STRUCTURAL STEEL MEMBERS IS PROHIBITED WITHOUT PRIOR APPROVAL OF THE ENGINEER AS TO LOCATION AND TYPE OF SPLICE TO BE MADE. ANY MEMBER HAVING A SPLICE NOT SHOWN AND DETAILED ON SHOP DRAWINGS WILL BE REJECTED.
7. ALL WELDING SHALL CONFORM TO THE AMERICAN WELDING SOCIETY CODE. USE E70 SERIES ELECTRODES FOR ALL STRUCTURAL STEEL WELDS.
8. SEE THE ARCHITECTURAL AND STRUCTURAL DRAWINGS FOR ALL ITEMS REQUIRED TO BE HOT-DIP GALVANIZED AFTER FABRICATION.
9. STRUCTURAL STEEL SHALL BE PUNCHED FOR WOOD BLOCKING, NAILERS, CLIPS AND TIES IN ACCORDANCE WITH ARCHITECTURAL/STRUCTURAL DETAILS.
10. ULTRASONIC INSPECTION BY THE TESTING LABORATORY SHALL BE PROVIDED FOR ALL WELDS CALLED FOR ON THE STRUCTURAL DRAWINGS OR SHOP DRAWINGS AS FULL PENETRATION WELDS.

STEEL JOISTS

1. ALL STEEL JOISTS SHALL BE OPEN-WEB TYPE CONFORMING TO THE LATEST "STANDARD LOAD TABLE DESIGN, FABRICATION AND ERECTION REQUIREMENTS" PUBLISHED BY THE STEEL JOIST INSTITUTE.
2. PROVIDE BRIDGING PER STEEL JOIST INSTITUTE STANDARD SPECIFICATION. ALL BRIDGING SHALL BE BOLTED OR WELDED AT ALL JOISTS AND AT ALL CROSSINGS AND ANCHORED TO SPANDREL MEMBERS. ALL BRIDGING FOR JOISTS USED AS SPANDREL MEMBERS (AT EDGE OF DECK) SHALL BE "X" BRIDGING. SIZE OF BRIDGING SHALL BE DETERMINED BY THE JOIST SUPPLIER. JOIST SUPPLIER TO PROVIDE ADDITIONAL BRIDGING AS REQUIRED FOR UPLIFT LOADS.
3. ALL JOISTS SHALL HAVE ANGLE BOTTOM CHORD MEMBERS UNLESS OTHERWISE APPROVED.
4. ALL K-SERIES JOISTS SHALL BE WELDED TO SUPPORT STEEL WITH A MINIMUM OF 2" OF 1/8" FILLET WELD AT BOTH SIDES OF JOIST SEAT.
5. WHERE JOISTS FRAME TO COLUMNS, JOISTS SHALL BE FIELD BOLTED TO COLUMNS WITH TWO 1/2"-DIAMETER A307 BOLTS AT EACH END OF THE JOIST TO PROVIDE LATERAL STABILITY DURING CONSTRUCTION.
6. PROVIDE BOLTED DIAGONAL BRIDGING WHERE REQUIRED PER STEEL JOIST INSTITUTE STANDARD SPECIFICATIONS. JOIST SHOP DRAWINGS SHALL INDICATE ALL JOISTS WHICH SHALL HAVE A ROW OF BOLTED BRIDGING IN PLACE BEFORE SLACKENING OF HOISTING LINES.
7. JOIST MANUFACTURER SHALL BE PREPARED TO SUBMIT CALCULATIONS FOR ALL JOISTS AT ARCHITECT'S OR ENGINEER'S REQUEST. CALCULATIONS SHALL HAVE LOAD DIAGRAMS FOR EACH MEMBER CLEARLY INDICATING SPAN, UNIFORM AND CONCENTRATED LOADS. ALL CALCULATIONS SHALL BEAR THE SEAL OF A REGISTERED PROFESSIONAL ENGINEER LICENSED IN THE STATE OF NORTH CAROLINA.
8. JOISTS SHALL BE DESIGNED FOR A NET WIND UPLIFT LOAD OF 15 PSF UNLESS NOTED OTHERWISE.

NON-LOAD BEARING COLD ROLLED STEEL (METAL STUDS)

1. ALL COLD FORMED LIGHT GAGE METAL FRAMING AND CONNECTIONS SHALL BE DESIGNED BY THE SUPPLIER'S ENGINEER. AT ARCHITECT'S OR ENGINEER'S REQUEST CONTRACTOR SHALL SUBMIT CALCULATIONS FOR ALL COLD FORMED METAL FRAMING USED TO SUPPORT CEILINGS AND EXTERIOR CLADDING.
2. ALL MEMBERS SHALL BE MANUFACTURED IN ACCORDANCE WITH THE AMERICAN IRON AND STEEL INSTITUTE, "NORTH AMERICAN SPECIFICATION FOR THE DESIGN OF COLD-FORMED STEEL STRUCTURAL MEMBERS" (S100-07 & S200-07).
3. ALL MEMBERS SHALL HAVE A MINIMUM YIELD STRENGTH OF 33 KSI AND BE FORMED FROM STEEL HAVING A G-60 GALVANIZED COATING MEETING THE REQUIREMENTS OF ASTM A653 AND C955.
4. ALL THE COLD-FORMED STEEL STRUCTURAL MEMBERS SHALL COME FROM A SINGLE SOURCE MANUFACTURER; ONLY MANUFACTURERS WHO ARE MEMBERS OF THE STEEL STUD MANUFACTURERS ASSOCIATION (SSMA) OR THE STEEL FRAMING INDUSTRY ASSOCIATION (SFIA) WILL BE ACCEPTED. THE INSTALLATION SHALL COMPLY WITH THE MANUFACTURER'S RECOMMENDATIONS.
5. MINIMUM EFFECTIVE STUD PROPERTIES SHALL BE AS FOLLOWS: 6" STUDS = 600S162-43, 6" TRACK = 600T125-43
6. SUBMIT SHOP DRAWINGS FOR ALL COLD FORMED METAL FRAMING USED TO SUPPORT CEILINGS AND EXTERIOR CLADDING. SHOP DRAWINGS SHALL INDICATE PLACING OF ALL FRAMING MEMBERS SHOWING TYPE, SIZE, GAUGE, NUMBER, LOCATION AND SPACING. THEY SHALL ALSO INDICATE SUPPLEMENTAL STRAPPING, BRACING, SPLICES, BRIDGING, ACCESSORIES AND DETAILS REQUIRED FOR PROPER INSTALLATION.
7. SHOP DRAWINGS SHALL SHOW SIZE AND LENGTH OF WELDS FOR ALL WELDED CONNECTIONS AND TYPE, SIZE AND NUMBER OF SCREWS FOR ALL SCREWED CONNECTIONS. SUBMIT MANUFACTURER'S DATA GIVING STRENGTH VALUES FOR SCREWS USED.
8. SHOP DRAWINGS SUBMITTED MUST BE PREPARED UNDER THE SUPERVISION OF AND SEALED BY A REGISTERED PROFESSIONAL ENGINEER LICENSED IN THE STATE OF NORTH CAROLINA.
9. ALL STRUCTURAL FRAMING ACCESSORIES SHALL BE FORMED FROM STRUCTURAL QUALITY STEEL WITH A MINIMUM YIELD STRENGTH OF 50 KSI AND HAVE MINIMUM PROTECTIVE COATING EQUAL TO ASTM A653 G-60 GALVANIZED COATING.
10. VERTICAL DEFLECTION CLIPS ARE REQUIRED TO BE CAPABLE OF ACCOMMODATING UPWARD AND DOWNWARD VERTICAL DISPLACEMENT OF THE STRUCTURE THROUGH POSITIVE MECHANICAL ATTACHMENT TO STUD WEB. MECHANICAL ATTACHMENT TO STRUCTURE AND SCREW ATTACHMENT TO STUD WEB USING STEP-BUSHINGS TO PERMIT FRICTIONLESS VERTICAL MOVEMENT. CONNECTORS MUST BE TESTED IN ACCORDANCE TO ICC AC261 CRITERIA AND HOLD A VALID ICC-ES EVALUATION SERVICE REPORT TO BE ACCEPTABLE.

ADHESIVE AND MECHANICAL POST-INSTALLED ANCHORS

1. ANCHOR BOLTS, REINFORCING STEEL, THREADED RODS, STAIR HANDRAILS, AND OTHER EMBEDDED STEEL ITEMS SHALL BE SET INTO HARDENED CONCRETE WITH ADHESIVE OR MECHANICAL POST-INSTALLED ANCHOR ONLY WHERE DETAILED ON THE DRAWINGS OR WHERE APPROVED BY THE ENGINEER.
2. PRE-APPROVED MANUFACTURERS ARE HILTI, SIMPSON STRONG-TIE, AND POWERS. WHERE DETAILS INDICATE SPECIFIC ADHESIVE OR MECHANICAL POST-INSTALLED ANCHORS, IT IS ACCEPTABLE AT THE CONTRACTOR'S OPTION TO SUBMIT AN ALTERNATE SIMILAR PRODUCT PROVIDED BY A DIFFERENT MANUFACTURER AS LONG AS THE MANUFACTURER'S DATA PROVIDES EQUIVALENT LOAD CAPACITY TO THE ANCHOR SPECIFIED.
3. MANUFACTURER'S DATA FOR ALL ADHESIVE AND MECHANICAL POST-INSTALLED ANCHORS SHALL BE SUBMITTED TO THE ENGINEER FOR APPROVAL PRIOR TO INSTALLATION. SUBMITTALS FOR ADHESIVE ANCHOR PRODUCTS SHALL INCLUDE ICC-ES EVALUATION REPORTS. STRICTLY FOLLOW THE MANUFACTURER'S SPECIFICATIONS AND INSTALLATION INSTRUCTIONS. HEED ALL LABEL WARNINGS. INSTALL IN ACCORDANCE WITH APPLICABLE SAFETY LAWS.
4. ALL HOLES SHALL BE DRILLED WITH A DIAMETER NO LARGER THAN 1/8" GREATER THAN THE DIAMETER OF THE STEEL MEMBER BEING INSTALLED.
5. ALL HOLES SHALL BE CLEANED WITH COMPRESSED AIR AND SHALL BE DRY PRIOR TO INSTALLATION OF ADHESIVE. HOLES SHALL BE FREE OF ALL DELETERIOUS MATERIAL SUCH AS LAITANCE, DUST, DIRT, AND OIL.
6. CONTRACTOR PERFORMING ADHESIVE WORK SHALL BE AN APPROVED CONTRACTOR BY THE MANUFACTURER FURNISHING THE ADHESIVE MATERIALS, AND SHALL HAVE NO LESS THAN FIVE YEARS EXPERIENCE IN THE VARIOUS TYPES OF ADHESIVE RELATED WORK REQUIRED IN THIS PROJECT. A CERTIFICATION FROM THE MANUFACTURER ATTESTING TO THE TRAINING SHALL BE SUBMITTED TO THE ENGINEER/ARCHITECT ALONG WITH THE PROPOSAL TO DO THE WORK.

REPRODUCTION

1. THE USE OF REPRODUCTIONS OF THESE CONTRACT DRAWINGS BY ANY CONTRACTOR, SUBCONTRACTOR, ERECTOR, FABRICATOR, OR MATERIAL SUPPLIER IN LIEU OF PREPARATION OF SHOP DRAWINGS SIGNIFIES HIS ACCEPTANCE OF ALL INFORMATION SHOWN HEREIN AS CORRECT, AND OBLIGATES HIMSELF TO ANY JOB EXPENSE, REAL OR IMPLIED, ARISING DUE TO ANY ERRORS THAT MAY OCCUR HERE ON.

CLIENT AND PROJECT

NORTH CAROLINA DEPARTMENT OF TRANSPORTATION

SCO ID NO.: 14-11006-01A

NEW DIVISION 8 OFFICE BUILDING

150 DOT DRIVE
CARTHAGE, NC 28327

DESIGNER

ANDRE JOHNSON ARCHITECT
PO BOX 14637
RALEIGH, NORTH CAROLINA 27620
TELEPHONE: 919.661.6935
MAIL: info@andrejohnsonarchitect.com

© 2015 Andre Johnson Architect, PLLC
Duplication or reproduction by any means without the express written consent of Andre L. Johnson, Architect is a violation of Federal and international law. The information contained on this document is the intellectual property of Andre L. Johnson, Architect and all rights thereto are Reserved. For exceptions, refer to the Owner-Architect Agreement.

CONSULTANT

STEWART
421 FAYETTEVILLE ST.
SUITE 400
RALEIGH, NC 27601
T 919.380.8750
FIRM LICENSE #C-1051
PROJECT S15011.00

REGISTRATION

NORTH CAROLINA PROFESSIONAL SEAL ENGINEER CHARLES P. LEE

08/05/2016

ISSUE

No.	Date	Description

SHEET INFO

GENERAL NOTES

S000

PROJECT NO: P1423.00
DATE: AUGUST 05, 2016
BID SET

ABBREVIATIONS

@	AT
Ø	DIAMETER
AB	ANCHOR BOLTS
ACI	AMERICAN CONCRETE INSTITUTE
ADDL	ADDITIONAL
AFF	ABOVE FINISHED FLOOR
AISC	AMERICAN INSTITUTE OF STEEL CONSTRUCTION
AISI	AMERICAN IRON AND STEEL INSTITUTE
ARCH	ARCHITECT'S / ARCHITECTURAL
ASTM	AMERICAN SOCIETY FOR TESTING AND MATERIALS
AWS	AMERICAN WELDING SOCIETY
B/ or BOT	BOTTOM
BCX	BOTTOM CHORD EXTENSION
BOS	BOTTOM OF STEEL
BRG	BEARING
BTWN	BETWEEN
CANT	CANTILEVER
CJ	CONTROL JOINT
CL	CENTERLINE
CLR	CLEAR
CMU	CONCRETE MASONRY UNIT
COL	COLUMN
CONC	CONCRETE
CONN	CONNECTION
CONST JT	CONSTRUCTION JOINT
CONT	CONTINUOUS
CONTR	CONTRACTOR
COORD	COORDINATE
CTRD	CENTERED
DEFL	DEFLECTION
DEPR	DEPRESSION / DEPRESSED
DET	DETAIL
DIM	DIMENSION
DIST	DISTANCE
DWG(S)	DRAWING(S)
DWL(S)	DOWEL(S)
EA	EACH
EJ	EXPANSION JOINT
ELEV	ELEVATION
EMBED	EMBEDDED / EMBEDMENT
ENGR	ENGINEER
EOD	EDGE OF DECK
EOS	EDGE OF SLAB
EQ	EQUAL
EQUIP	EQUIPMENT
EW	EACH WAY
EXIST	EXISTING
EXP	EXPANSION
FDN	FOUNDATION
FFE	FINISHED FLOOR ELEVATION
FOW	FACE OF WALL
FTG	FOOTING
GA	GAUGE
GALV	GALVANIZED
HD	HEADED
HI	HIGH
HORIZ	HORIZONTAL
HSS	HOLLOW STRUCTURAL SECTION
INT	INTERIOR
JT	JOINT
K	KIP(S)
KSI	KIPS PER SQUARE INCH
LBS	POUNDS
LLH	LONG LEG HORIZONTAL
LLV	LONG LEG VERTICAL
LO	LOW
LOC	LOCATION
MAX	MAXIMUM
MC	MOMENT CONNECTION
MECH	MECHANICAL
MFR	MANUFACTURER
MID	MIDDLE
MIN	MINIMUM
MISC	MISCELLANEOUS
NTS	NOT TO SCALE
NWC	NORMAL WEIGHT CONCRETE
OC	ON CENTER
OPNG	OPENING
PAF	POWDER ACTUATED FASTENER
PL	PLATE
PSF	POUNDS PER SQUARE FOOT
PSI	POUNDS PER SQUARE INCH
PT	PRESSURE TREATED
REF	REFERENCE
REINF	REINFORCING
REQD	REQUIRED
SCHD	SCHEDULE
SIM	SIMILAR
SOG	SLAB ON GRADE
SPEC(S)	SPECIFICATION(S)
SQ	SQUARE
STD	STANDARD
STIFF	STIFFENER
STL	STEEL
STR	STRUCTURAL
T/	TOP
TCX	TOP CHORD EXTENSION
TOF	TOP OF FOOTING
TOS	TOP OF STEEL
TOW	TOP OF WALL
TYP	TYPICAL
UNO	UNLESS NOTED OTHERWISE
VERT	VERTICAL
VIF	VERIFY IN FIELD
W/	WITH
WWF	WELDED WIRE FABRIC
WP	WORK POINT

CLIENT AND PROJECT

NORTH CAROLINA DEPARTMENT OF TRANSPORTATION

SCO ID NO.: 14-11006-01A

NEW DIVISION 8 OFFICE BUILDING

150 DOT DRIVE
CARTHAGE, NC 28327

DESIGNER

ANDRE JOHNSON ARCHITECT

PO BOX 14637
RALEIGH, NORTH CAROLINA 27620
TELEPHONE: 919.661.6935
MAIL: info@andrejohnsonarchitect.com

© 2015 Andre Johnson Architect, PLLC
Duplication or reproduction by any means without the express written consent of Andre L. Johnson, Architect is a violation of Federal and international law. The information contained on this document is the intellectual property of Andre L. Johnson, Architect and all rights thereto are Reserved. For exceptions, refer to the Owner-Architect Agreement.

CONSULTANT

STEWART

421 FAYETTEVILLE ST.
SUITE 400
RALEIGH, NC 27601

T 919.380.8750
FIRM LICENSE #C-1051
PROJECT S15011.00

REGISTRATION

NORTH CAROLINA PROFESSIONAL SEAL ENGINEER CHARLES P. LEWIS

08/05/2016

ISSUE

No.	Date	Description

SHEET INFO

ABBREVIATIONS

S001

PROJECT NO: P1423.00
DATE: AUGUST 05, 2016
BID SET

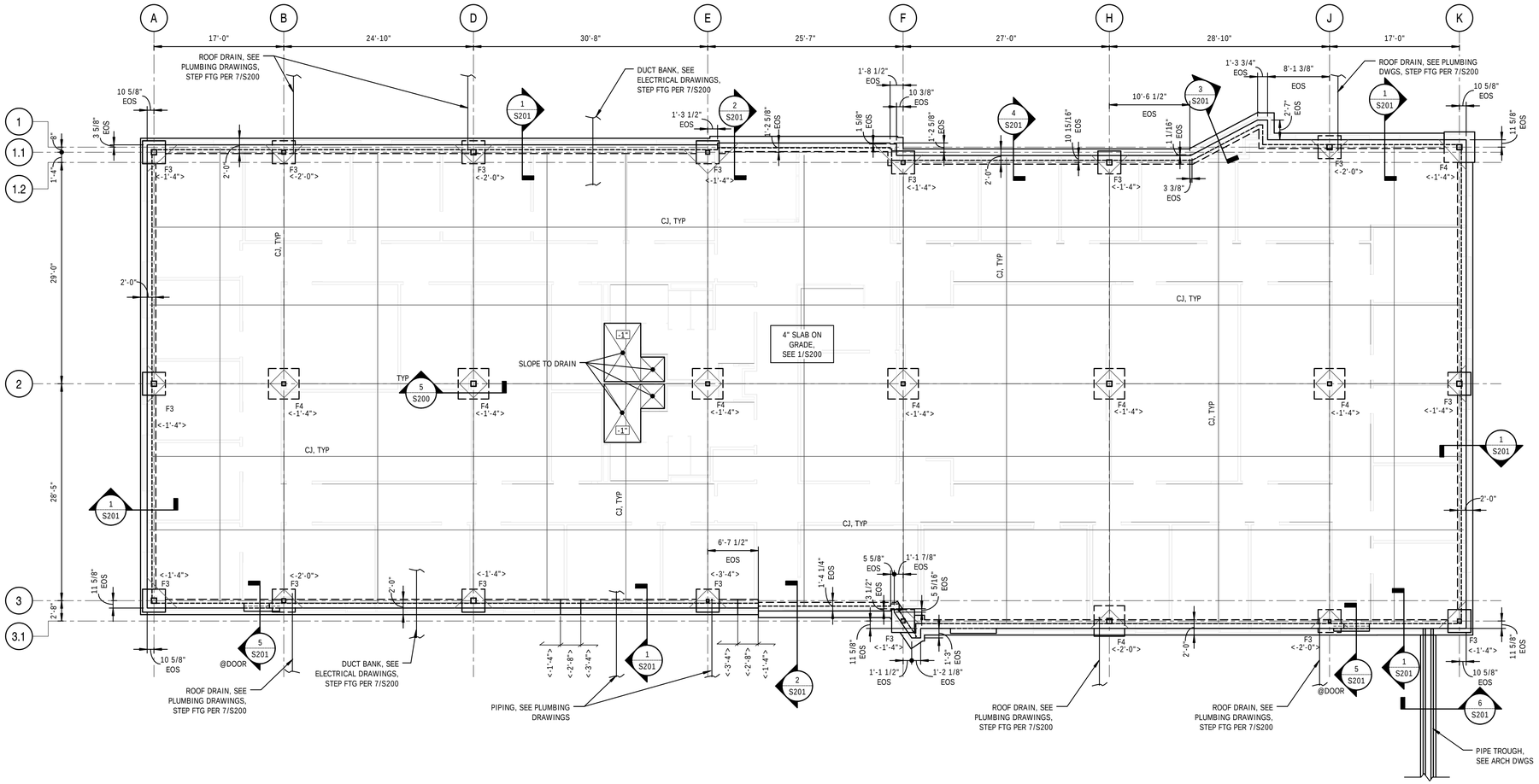

1 FOUNDATION PLAN

S101

1/8" = 1'-0"

0' 4' 8' 16' 32'

NOTES:

1. FOR GENERAL NOTES AND ABBREVIATIONS, SEE S000 & S001.
2. SEE CIVIL DRAWINGS FOR FINISHED FLOOR ELEVATION.
3. TOP OF FOOTING 1'-4" BELOW FINISHED FLOOR ELEVATION, UNO. <No> INDICATES TOP OF FOOTING ELEVATION, SEE PLAN.
4. INDICATES STEP IN WALL FOOTING, SEE 7/S200.
5. "F#" INDICATES FOOTING TYPE, SEE 2/S200.
6. FOR TYPICAL SLAB CONSTRUCTION DETAILS, SEE S200.
7. SEE 3/S200 FOR COLUMN SCHEDULE.
8. No INDICATES DEPRESSED OR RAISED SLAB ELEVATION, SEE PLAN AND 8/S200.

CLIENT AND PROJECT

NORTH CAROLINA DEPARTMENT OF TRANSPORTATION

SCO ID NO.: 14-11006-01A

NEW DIVISION 8 OFFICE BUILDING

150 DOT DRIVE
CARTHAGE, NC 28327

DESIGNER

ANDRE JOHNSON ARCHITECT

PO BOX 14637
RALEIGH, NORTH CAROLINA 27620
TELEPHONE: 919.661.6935
MAIL: info@andrejohnsonarchitect.com

© 2015 Andre Johnson Architect, PLLC
Duplication or reproduction by any means without the express written consent of Andre L. Johnson, Architect is a violation of Federal and international law. The information contained on this document is the intellectual property of Andre L. Johnson, Architect and all rights thereto are Reserved. For exceptions, refer to the Owner-Architect Agreement.

CONSULTANT

STEWART
421 FAYETTEVILLE ST.
SUITE 400
RALEIGH, NC 27601
T 919.380.8750
FIRM LICENSE #C-1051
PROJECT S15011.00

REGISTRATION

NORTH CAROLINA PROFESSIONAL ENGINEER SEAL 030818 CHARLES P. LEWIS

08/05/2016

ISSUE

No.	Date	Description

SHEET INFO

FOUNDATION PLAN

S101

PROJECT NO: P1423.00
DATE: AUGUST 05, 2016
BID SET

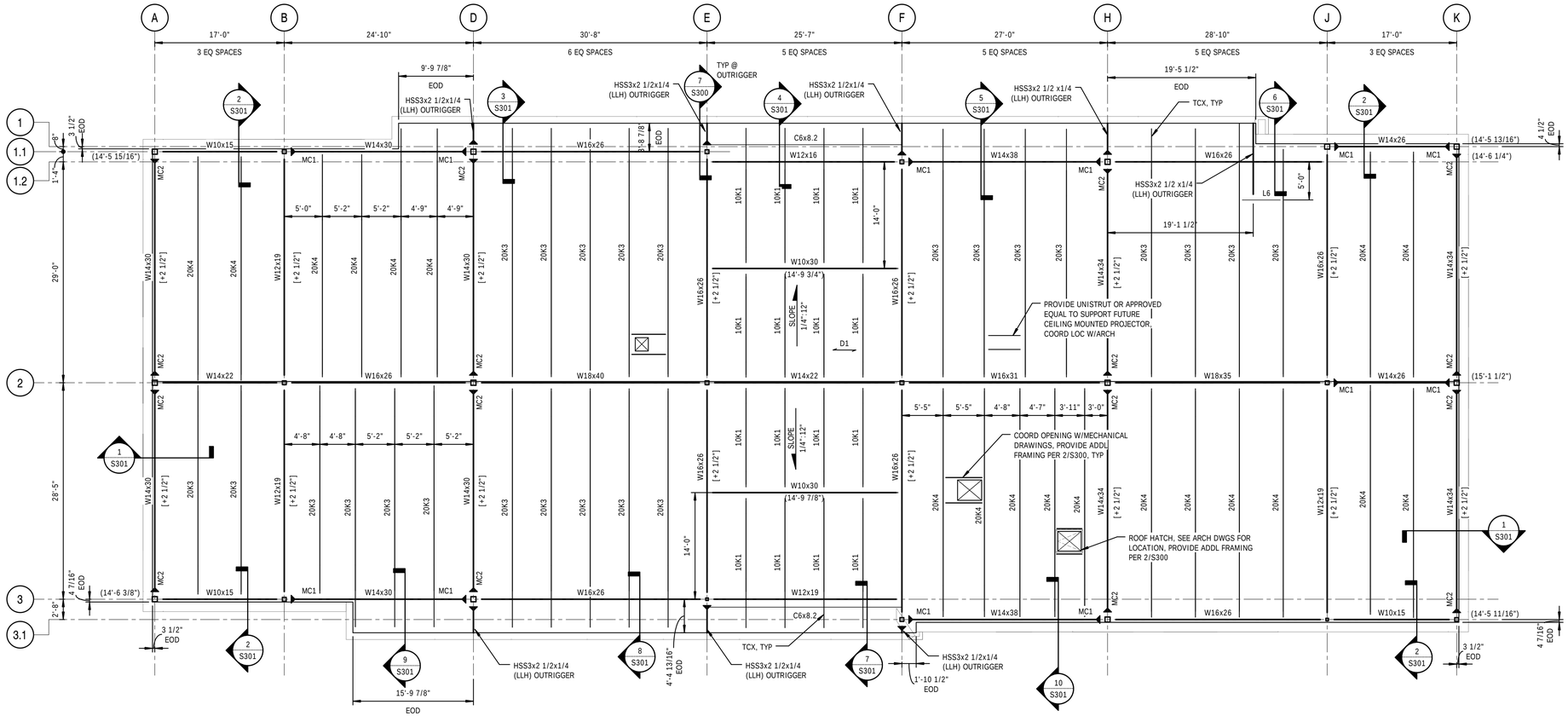

1 ROOF FRAMING PLAN
S102

1/8" = 1'-0"

0' 4' 8' 16' 32'

NOTES:

1. FOR GENERAL NOTES AND ABBREVIATIONS, SEE S000 & S001.
2. (No) INDICATES TOP OF STEEL/JOIST BEARING ELEVATION. [+No] INDICATES TOP OF STEEL ABOVE JOIST BEARING ELEVATION.
3. D# INDICATES STEEL DECK SPAN DIRECTION. CONSTRUCTION SHALL BE 1 1/2"-22GA METAL DECK. SEE 1/S300 FOR TYPICAL ROOF CONSTRUCTION DETAIL.
4. "MC#" INDICATES MOMENT CONNECTION TYPE, SEE 6/S300.
5. FOR TYPICAL ROOF FRAMING DETAILS, SEE S300.
6. "TCX" INDICATES TYPE R4 JOIST TOP CHORD EXTENSION, SEE PLAN.
7. "L6" INDICATES L6x4x5/16 (LLV).
8. "BBFB" INDICATES BEAM BOTTOM FLANGE BRACING LOCATION, SEE 4/S300.
9. ALL ROOF JOISTS HAVE BEEN DESIGNED TO SUPPORT A ROOF TOP UNIT WITH A MAXIMUM WEIGHT OF 1250 LBS, PROVIDED THE WEIGHT IS DISTRUBUTED EVENLY BETWEEN TWO OR MORE JOISTS. CONTRACTOR TO CONTACT EOR IF ACTUAL WEIGHT EXCEEDS ASSUMED WEIGHT. SEE DETAIL 2/S300 AND 3/S300 FOR REQUIRED FRAMING AROUND ROOF OPENINGS.

CLIENT AND PROJECT

NORTH CAROLINA DEPARTMENT OF TRANSPORTATION

SCO ID NO.: 14-11006-01A

NEW DIVISION 8 OFFICE BUILDING

150 DOT DRIVE
CARTHAGE, NC 28327

DESIGNER

ANDRE JOHNSON ARCHITECT
PO BOX 14637
RALEIGH, NORTH CAROLINA 27620
TELEPHONE: 919.661.6935
MAIL: info@andrejohnsonarchitect.com

© 2015 Andre Johnson Architect, PLLC
Duplication or reproduction by any means without the express written consent of Andre L. Johnson, Architect is a violation of Federal and international law. The information contained on this document is the intellectual property of Andre L. Johnson, Architect and all rights thereto are Reserved. For exceptions, refer to the Owner-Architect Agreement.

CONSULTANT

STEWART
421 FAYETTEVILLE ST.
SUITE 400
RALEIGH, NC 27601
T 919.380.8750
FIRM LICENSE #C-1051
PROJECT S15011.00

REGISTRATION

NORTH CAROLINA PROFESSIONAL ENGINEER SEAL 019893 CHARLES P. LEWIS
08/05/2016

ISSUE

No.	Date	Description

SHEET INFO

ROOF FRAMING PLAN

S102

PROJECT NO: P1423.00
DATE: AUGUST 05, 2016
BID SET

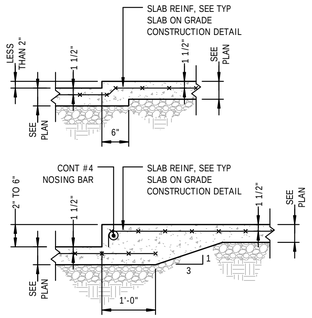

8 / S200 DETAIL

TYPICAL DEPRESSION IN SLAB ON GRADE
NTS

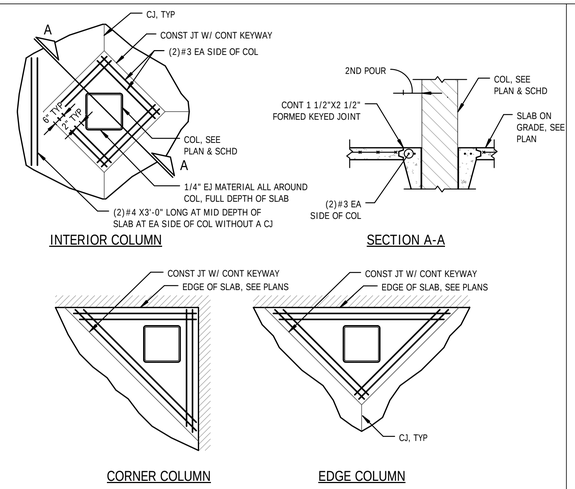

6 / S200 DETAIL

COLUMN ISOLATION JOINTS, HSS COLUMNS
NTS

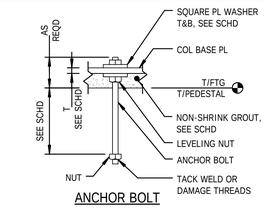

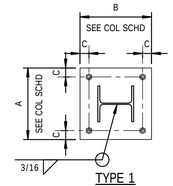

BOLT SIZE	3/4"Ø
DIMENSION "C"	1 1/2"
SQUARE PL WASHER SIZE	1/4"x2"
GROUT THICKNESS	2"

4 / S200 DETAIL

STEEL COLUMN BASE PLATES
NTS

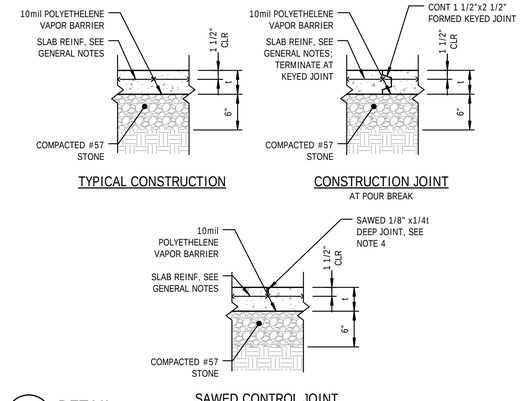

1 / S200 DETAIL

TYPICAL SLAB ON GRADE
NTS

NOTES:
1. 't' DENOTES SLAB THICKNESS, SEE PLANS.
2. LOCATION OF SLAB ON GRADE CONSTRUCTION JOINTS SHALL BE DETERMINED BY THE CONTRACTOR. JOINT LOCATIONS SHALL BE SUBMITTED TO THE ENGINEER FOR APPROVAL PRIOR TO CONSTRUCTION.
3. SEE PLANS FOR LOCATION OF CONTROL JOINTS. WHERE NOT SHOWN ON PLAN, CONTACT THE ENGINEER.
4. SAW CUT CONTROL JOINTS WITHIN 8 HOURS OF SLAB POUR.

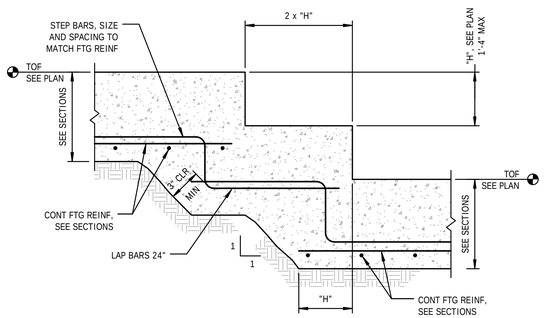

7 / S200 DETAIL

TYPICAL STEP IN MASONRY WALL FOOTING
NTS

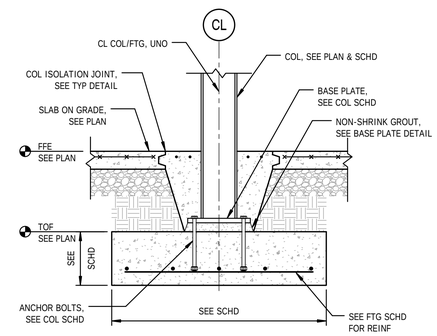

5 / S200 DETAIL

TYPICAL SPREAD FOOTING AT STEEL COLUMN
NTS
NOTES:
1. COAT BASE PLATE, ANCHOR BOLTS, AND COLUMN BELOW SLAB ON GRADE WITH AN APPROVED ASPHALT PAINT.

MARK	SIZE			REINFORCEMENT (EACH WAY)	
	WIDTH	LENGTH	DEPTH	TOP	BOTTOM
F3	3'-0"	3'-0"	1'-0"	NA	(4)#5
F4	4'-0"	4'-0"	1'-0"	NA	(5)#5

2 / S200 SPREAD FOOTING SCHEDULE

NTS

Level 2	3/8" CAP PL	3/8" CAP PL	3/8" CAP PL	1/4" CAP PL	1/4" CAP PL	1/4" CAP PL	3/8" CAP PL	3/8" CAP PL	3/8" CAP PL	1/4" CAP PL	1/4" CAP PL	1/4" CAP PL	1/4" CAP PL	1/4" CAP PL	1/4" CAP PL	3/8" CAP PL	3/8" CAP PL	3/8" CAP PL	1/4" CAP PL	1/4" CAP PL	1/4" CAP PL	3/8" CAP PL	3/8" CAP PL	3/8" CAP PL	Level 2
15'-4" LEVEL 1	HSS8x8x3/8	HSS8x8x3/8	HSS8x8x3/8	HSS6x6x1/4	HSS6x6x1/4	HSS6x6x1/4	HSS8x8x1/2	HSS8x8x3/8	HSS8x8x1/2	HSS8x6x1/4	HSS8x6x1/4	HSS4x4x1/4	HSS6x6x3/8	HSS6x6x1/4	HSS6x6x1/2	HSS8x8x5/8	HSS8x8x1/2	HSS8x8x5/8	HSS8x6x3/8	HSS8x6x3/8	HSS4x4x1/4	HSS8x8x5/8	HSS8x8x1/2	HSS6x6x3/8	15'-4" LEVEL 1
0"																									0"
Column Locations	A-1.1	A-2	A-3	B-1.1	B-2	B-3	D-1.1	D-2	D-3	E-1.1	E-2	E-3	F-1.2	F-2	F-3.1	H-1.2	H-2	H-3.1	J-1	J-2	J-3.1	K-1	K-2	K-3.1	
BASE PLATE SIZE	3/4"x14"x14"	3/4"x14"x14"	3/4"x14"x14"	3/4"x12"x12"	3/4"x12"x12"	3/4"x12"x12"	3/4"x14"x14"	3/4"x14"x14"	3/4"x14"x14"	3/4"x12"x12"	3/4"x12"x12"	3/4"x10"x10"	3/4"x12"x12"	3/4"x12"x12"	3/4"x12"x12"	3/4"x14"x14"	3/4"x14"x14"	3/4"x14"x14"	3/4"x14"x14"	3/4"x12"x12"	3/4"x10"x10"	3/4"x14"x14"	3/4"x14"x14"	3/4"x12"x12"	BASE PLATE SIZE
BASE PLATE TYPE	1	1	1	1	1	1	1	1	1	1	1	1	1	1	1	1	1	1	1	1	1	1	1	1	BASE PLATE TYPE
ANCHOR BOLTS	(4)3/4"Ø	(4)3/4"Ø	(4)3/4"Ø	(4)3/4"Ø	(4)3/4"Ø	(4)3/4"Ø	(4)3/4"Ø	(4)3/4"Ø	(4)3/4"Ø	(4)3/4"Ø	(4)3/4"Ø	(4)3/4"Ø	(4)3/4"Ø	(4)3/4"Ø	(4)3/4"Ø	(4)3/4"Ø	(4)3/4"Ø	(4)3/4"Ø	(4)3/4"Ø	(4)3/4"Ø	(4)3/4"Ø	(4)3/4"Ø	(4)3/4"Ø	(4)3/4"Ø	ANCHOR BOLTS
EMBEDMENT LENGTH	9"	9"	9"	9"	9"	9"	9"	9"	9"	9"	9"	9"	9"	9"	9"	9"	9"	9"	9"	9"	9"	9"	9"	9"	EMBEDMENT LENGTH

3 / S200 STEEL COLUMN SCHEDULE

NTS

CLIENT AND PROJECT

NORTH CAROLINA
DEPARTMENT OF
TRANSPORTATION

SCO ID NO.: 14-11006-01A

NEW DIVISION 8 OFFICE BUILDING

150 DOT DRIVE
CARTHAGE, NC 28327

DESIGNER

ANDRE JOHNSON ARCHITECT
PO BOX 14637
RALEIGH, NORTH CAROLINA 27620
TELEPHONE: 919.661.6935
MAIL: info@andrejohnsonarchitect.com

© 2015 Andre Johnson Architect, PLLC
Duplication or reproduction by any means without the express written consent of Andre L. Johnson, Architect is a violation of Federal and international law. The information contained on this document is the intellectual property of Andre L. Johnson, Architect and all rights thereto are Reserved. For exceptions, refer to the Owner-Architect Agreement.

CONSULTANT

STEWART
421 FAYETTEVILLE ST.
SUITE 400
RALEIGH, NC 27601
T 919.380.8750
FIRM LICENSE #C-1051
PROJECT S15011.00

REGISTRATION

NORTH CAROLINA PROFESSIONAL SEAL ENGINEER CHARLES P. LEN

08/05/2016

ISSUE

No.	Date	Description

SHEET INFO

FOUNDATION SECTIONS & DETAILS

S200

PROJECT NO: P1423.00
DATE: AUGUST 05, 2016
BID SET

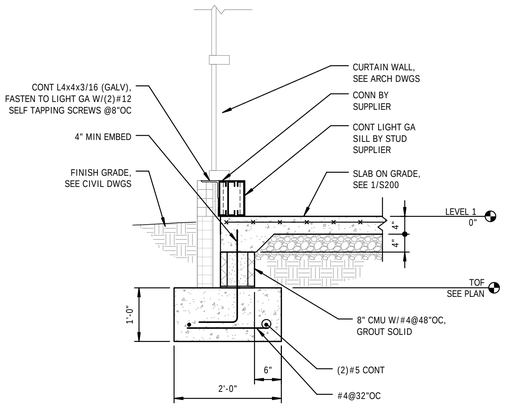

4 S201 SECTION
3/4" = 1'-0"

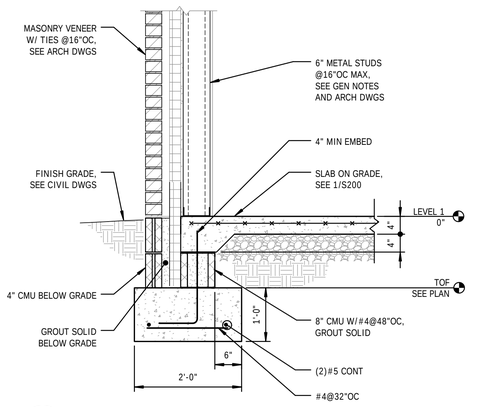

1 S201 SECTION
3/4" = 1'-0"

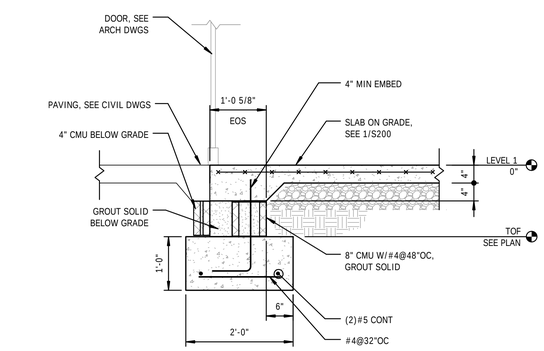

5 S201 SECTION
3/4" = 1'-0"

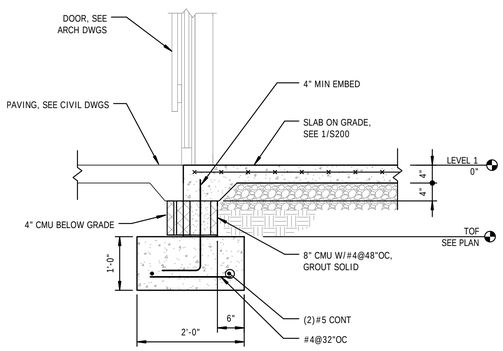

2 S201 SECTION
3/4" = 1'-0"

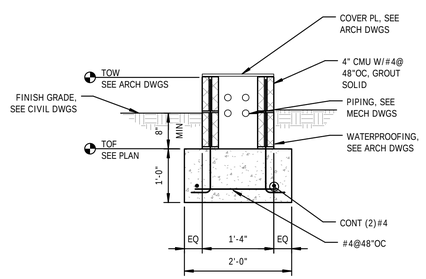

6 S201 SECTION
PIPE TROUGH
3/4" = 1'-0"

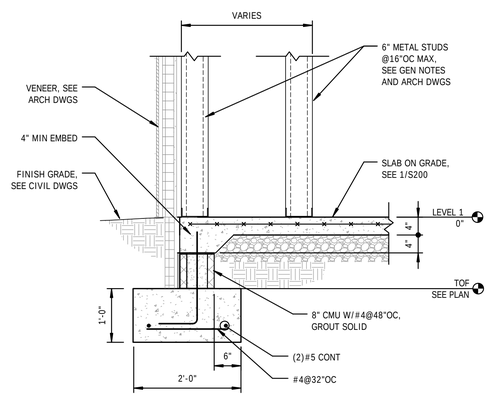

3 S201 SECTION
3/4" = 1'-0"

CLIENT AND PROJECT

NORTH CAROLINA DEPARTMENT OF TRANSPORTATION

SCO ID NO.: 14-11006-01A

NEW DIVISION 8 OFFICE BUILDING

150 DOT DRIVE
CARTHAGE, NC 28327

DESIGNER

ANDRE JOHNSON ARCHITECT
PO BOX 14637
RALEIGH, NORTH CAROLINA 27620
TELEPHONE: 919.661.6935
MAIL: info@andrejohnsonarchitect.com

© 2015 Andre Johnson Architect, PLLC
Duplication or reproduction by any means without the express written consent of Andre L. Johnson, Architect is a violation of Federal and international law. The information contained on this document is the intellectual property of Andre L. Johnson, Architect and all rights thereto are Reserved. For exceptions, refer to the Owner-Architect Agreement.

CONSULTANT

STEWART
421 FAYETTEVILLE ST.
SUITE 400
RALEIGH, NC 27601
T 919.380.8750
FIRM LICENSE #C-1051
PROJECT S15011.00

REGISTRATION

NORTH CAROLINA PROFESSIONAL SEAL ENGINEER CHARLES P. LEE

08/05/2016

ISSUE

No.	Date	Description

SHEET INFO

FOUNDATION SECTIONS & DETAILS

S201

PROJECT NO: P1423.00
DATE: AUGUST 05, 2016
BID SET

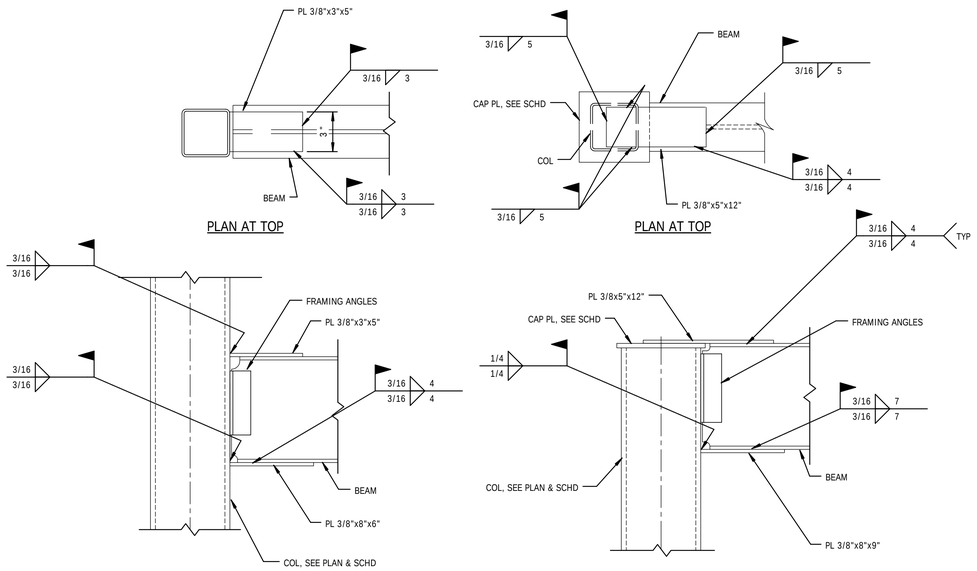

6 S300 SCHEDULE
MOMENT CONNECTIONS
NTS

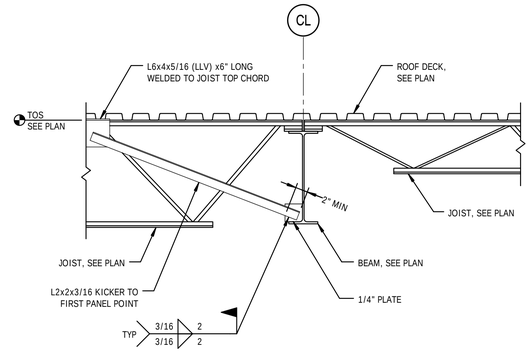

4 S300 DETAIL
TYPICAL BEAM BOTTOM FLANGE BRACING
NTS

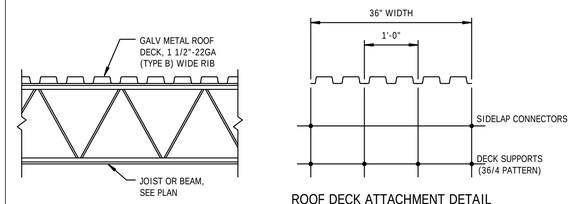

ROOF DECK ATTACHMENT DETAIL

NOTES:
1. ATTACH DECK TO SUPPORTING MEMBERS WITH SELF-DRILLING SELF-TAPPING HEX WASHER HEAD SCREWS. USE #12-24 FOR DECK ATTACHMENT TO SUPPORTS AND #10-16 FOR SIDELAP ATTACHMENT.
2. AT DECK BEARING SUPPORTS, PROVIDE SCREWS @12"OC (36/4 PATTERN).
3. AT SUPPORTS PARALLEL TO DECK SPAN, PROVIDE SCREWS @12"OC, TYPICAL.
4. AT DECK SIDELAPS/PERIMETER EDGE, PROVIDE SCREWS @12"OC, TYPICAL. WELDING OF SIDELAPS IS NOT PERMITTED FOR 22GA DECK.
5. MINIMUM DECK PROPERTIES: 1 1/2"-22 GAGE; Ip=0.155 in4/ft; Sp=0.186 in3/ft; In=0.183 in4/ft; Sn=0.192 in3/ft; Fy=33 ksi.
6. DECK SHALL BE CONTINUOUS OVER (2) OR MORE SPANS, TYPICAL.
7. 5/8"Ø PUDDLE WELDS MAY BE USED FOR DECK ATTACHMENT TO SUPPORTS AT SAME SPACING SPECIFIED ABOVE. SIDELAP FASTENING MUST BE SCREWED AS DESCRIBED ABOVE.
8. CONTRACTOR OPTION TO SUBMIT MECHANICAL FASTENERS BY HILTI, SIMSPON STRONG-TIE, OR APPROVED EQUAL. SUBSTITUTION REQUESTS FOR PRODUCTS MAY BE SUBMITTED BY THE CONTRACTOR TO THE ENGINEER-OF-RECORD (EOR) FOR REVIEW. SUBSTITUTIONS WILL ONLY BE CONSIDERED FOR PRODUCTS THAT MEET THE CODE REQUIREMENTS FOR DECK ATTACHMENT, POSSESS A FM GLOBAL APPROVAL AND POSSESS A CODE REPORT (ICC-ES) RECOGNIZING THE PRODUCT FOR THE APPROPRIATE APPLICATION. SUBSTITUTION REQUESTS SHALL INCLUDE CALCULATIONS THAT DEMONSTRATE THE SUBSTITUTED PRODUCT IS CAPABLE OF ACHIEVING THE EQUIVALENT PERFORMANCE VALUES OF THE DESIGN BASIS PRODUCT. CONTRACTOR SHALL CONTACT MANUFACTURER'S REPRESENTATIVE FOR PRODUCT INSTALLATION TRAINING AND A LETTER SHALL BE SUBMITTED TO THE EOR INDICATING TRAINING HAS TAKEN PLACE. FASTENERS SHALL BE COLLATED AND INSTALLED USING THE MANUFACTURER'S DELIVERY TOOL AND FOLLOWING MANUFACTURER'S INSTRUCTIONS.

1 S300 DETAIL
TYPICAL ROOF CONSTRUCTION, 1 1/2" METAL ROOF DECK
NTS

STEEL LOOSE LINTEL ANGLE SUPPORTING BRICK VENEER

CLEAR OPENING	LOOSE LINTEL ANGLE
UP TO 5'-0"	L4x4x3/8
5'-1" TO 8'-0"	L6x4x3/8 (LLV)
8'-1" TO 10'-0"	L7x4x3/8 (LLV)
10'-1" TO 12'-0"	L8x4x1/2 (LLV)

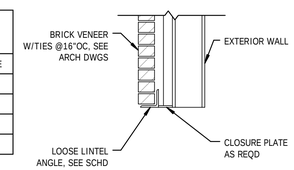

5 S300 DETAIL
STEEL LOOSE LINTEL ANGLES SUPPORTING BRICK VENEER
NTS
NOTES:
1. ALL LOOSE LINTELS SHALL BE PAINTED OR GALVANIZED, SEE ARCHITECTURAL DRAWINGS.
2. PROVIDE 6" MINIMUM BEARING FOR OPENINGS UP TO 8'-0" WIDE. PROVIDE 8" MINIMUM BEARING FOR OPENINGS OVER 8'-0" WIDE.
3. SEE ARCHITECTURAL DRAWINGS FOR ANGLE PLACEMENT AND FLASHING.
4. LOOSE LINTEL ANGLES ARE NOT SHOWN ON THE STRUCTURAL DRAWINGS. SEE ARCHITECTURAL DRAWINGS FOR ALL LOCATIONS OF OPENINGS REQUIRING ANGLES.
5. FOR CLEAR OPENING DIMENSIONS GREATER THAN THOSE SHOWN IN THE SCHEDULE, SEE OTHER DETAILS OR CONTACT THE ENGINEER OF RECORD.

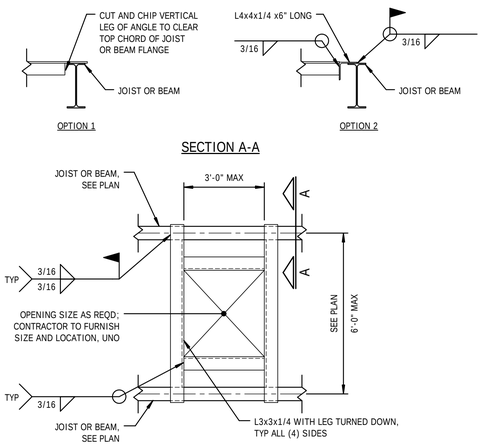

2 S300 DETAIL
TYPICAL FRAMING AROUND ROOF OPENINGS, 1 1/2" METAL ROOF DECK
NTS
NOTES:
1. PROVIDE ANGLE FRAMING AROUND ALL OPENINGS LARGER THAN 10"x10" (10"Ø).

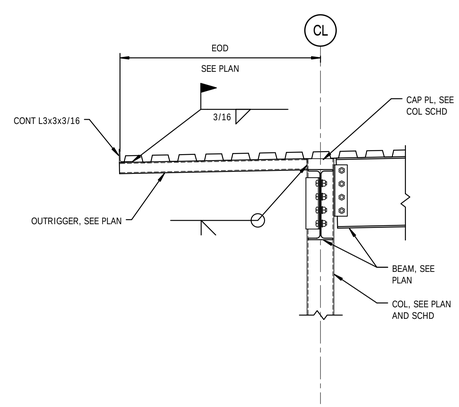

7 S300 DETAIL
TYPICAL HSS OUTRIGGER CONNECTION
3/4" = 1'-0"

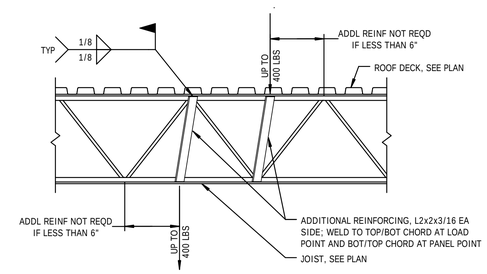

3 S300 DETAIL
TYPICAL REINFORCING FOR CONCENTRATED LOADS ON STEEL JOISTS
NTS
NOTES:
1. WHERE POSSIBLE, ALL LOADS ARE TO BE SUPPORTED FROM PANEL POINTS. WHERE NOT POSSIBLE, PROVIDE REINFORCEMENT AS DETAILED.
2. LOADS LESS THAN 150 LBS REQUIRE NO ADDITIONAL REINFORCING. LOADS LARGER THAN 400 LBS PER JOIST REQUIRE SPECIAL SUPPORT CONDITIONS TO BE APPROVED BY THE ENGINEER OF RECORD.
3. BOTTOM CHORDS EXTENDING UNSUPPORTED PAST THE FIRST BOTTOM PANEL POINT TOWARD JOIST BEARING LOCATION ARE NOT TO BE USED TO SUPPORT ANY LOAD WITHOUT WRITTEN PERMISSION FROM THE ENGINEER OF RECORD.

CLIENT AND PROJECT

NORTH CAROLINA DEPARTMENT OF TRANSPORTATION

SCO ID NO.: 14-11006-01A

NEW DIVISION 8 OFFICE BUILDING

150 DOT DRIVE
CARTHAGE, NC 28327

DESIGNER

ANDRE JOHNSON ARCHITECT
PO BOX 14637
RALEIGH, NORTH CAROLINA 27620
TELEPHONE: 919.661.6935
MAIL: info@andrejohnsonarchitect.com

© 2015 Andre Johnson Architect, PLLC
Duplication or reproduction by any means without the express written consent of Andre L. Johnson, Architect is a violation of Federal and international law. The information contained on this document is the intellectual property of Andre L. Johnson, Architect and all rights thereto are Reserved. For exceptions, refer to the Owner-Architect Agreement.

CONSULTANT

STEWART
421 FAYETTEVILLE ST.
SUITE 400
RALEIGH, NC 27601
T 919.380.8750
FIRM LICENSE #C-1051
PROJECT S15011.00

REGISTRATION

NORTH CAROLINA PROFESSIONAL ENGINEER SEAL CHARLES P. LEWIS
08/05/2016

ISSUE

No.	Date	Description

SHEET INFO

ROOF FRAMING SECTIONS & DETAILS

S300

PROJECT NO: P1423.00
DATE: AUGUST 05, 2016
BID SET

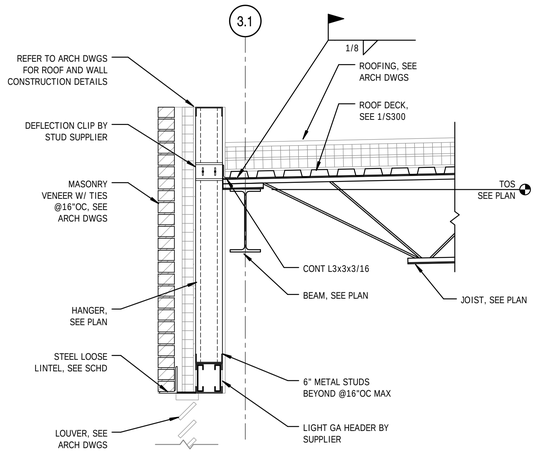

10 S301 SECTION
AT LOUVER
3/4" = 1'-0"

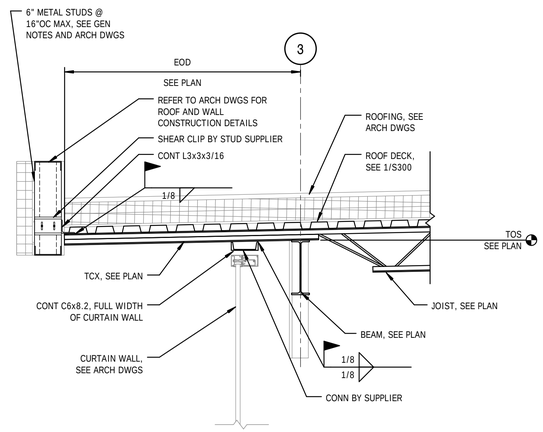

7 S301 SECTION
3/4" = 1'-0"

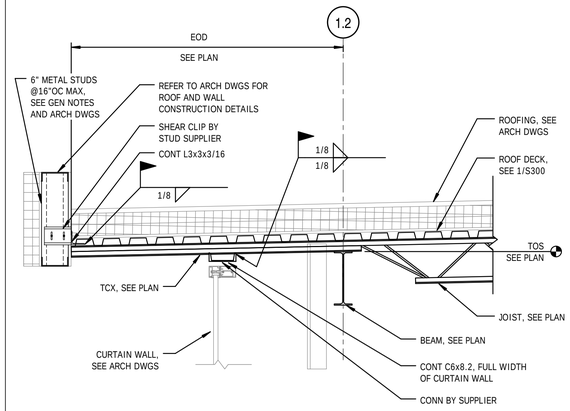

4 S301 SECTION
3/4" = 1'-0"

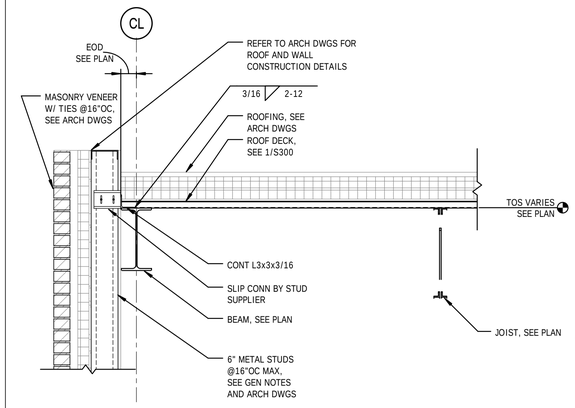

1 S301 SECTION
3/4" = 1'-0"

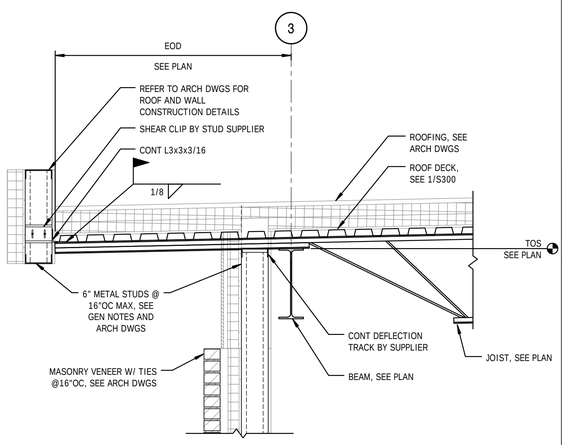

8 S301 SECTION
3/4" = 1'-0"

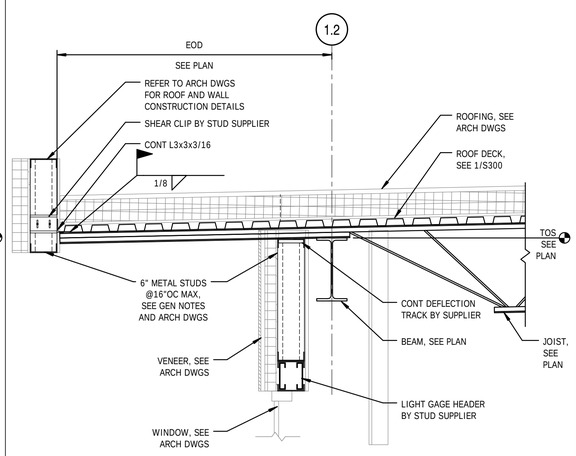

5 S301 SECTION
3/4" = 1'-0"

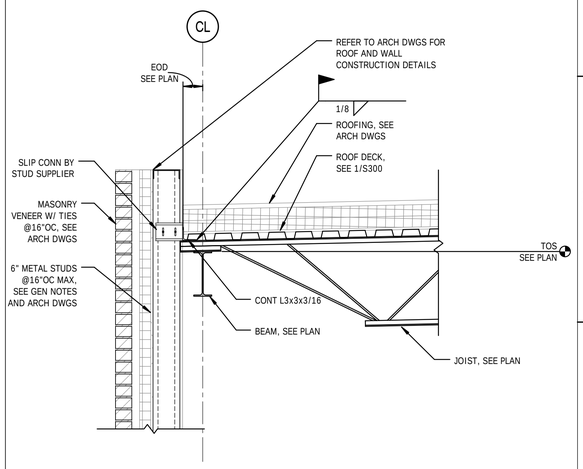

2 S301 SECTION
3/4" = 1'-0"

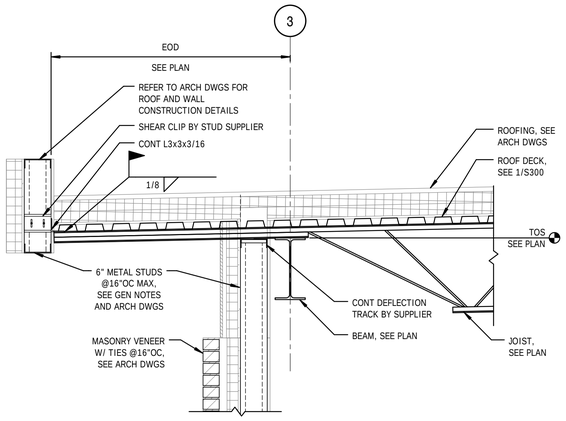

9 S301 SECTION
3/4" = 1'-0"

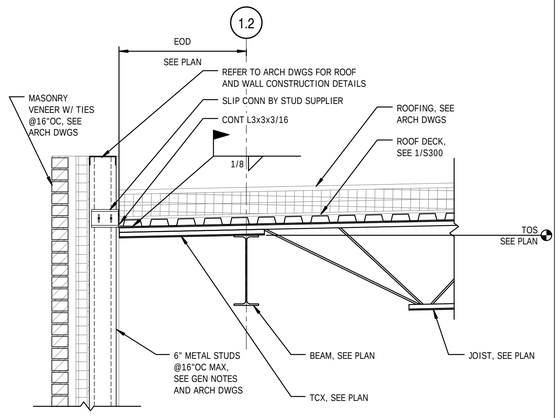

6 S301 SECTION
3/4" = 1'-0"

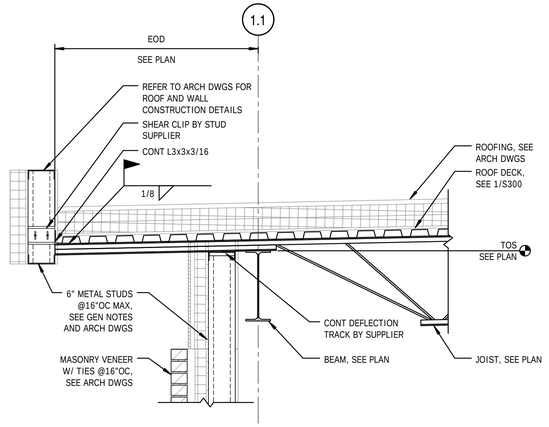

3 S301 SECTION
3/4" = 1'-0"

CLIENT AND PROJECT

NORTH CAROLINA DEPARTMENT OF TRANSPORTATION

SCO ID NO.: 14-11006-01A

NEW DIVISION 8 OFFICE BUILDING

150 DOT DRIVE
CARTHAGE, NC 28327

DESIGNER

ANDRE JOHNSON ARCHITECT
PO BOX 14637
RALEIGH, NORTH CAROLINA 27620
TELEPHONE: 919.661.6935
MAIL: info@andrejohnsonarchitect.com

© 2015 Andre Johnson Architect, PLLC
Duplication or reproduction by any means without the express written consent of Andre L. Johnson, Architect is a violation of Federal and international law. The information contained on this document is the intellectual property of Andre L. Johnson, Architect and all rights thereto are Reserved. For exceptions, refer to the Owner-Architect Agreement.

CONSULTANT

STEWART
421 FAYETTEVILLE ST.
SUITE 400
RALEIGH, NC 27601
T 919.380.8750
FIRM LICENSE #C-1051
PROJECT S15011.00

REGISTRATION

NORTH CAROLINA PROFESSIONAL ENGINEER SEAL
CHARLES P. LEWIS
08/05/2016

ISSUE

No.	Date	Description

SHEET INFO

ROOF FRAMING SECTIONS & DETAILS

S301

PROJECT NO: P1423.00
DATE: AUGUST 05, 2016
BID SET

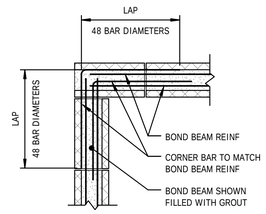

3 / S400 **DETAIL**

TYPICAL BOND BEAM CORNER
NTS

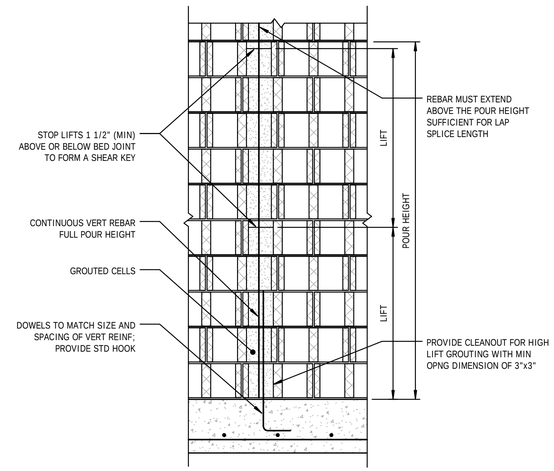

GENERAL GROUTING REQUIREMENTS:

1. ALL REINFORCED CELLS SHALL BE GROUTED SOLID.
2. REINFORCING BARS SHALL BE IN PROPER POSITION PRIOR TO PLACEMENT OF GROUT, NOT PUSHED DOWN INTO PREVIOUSLY PLACED GROUT. SAME REQUIREMENT APPLIES FOR EMBEDDED BOLTS AND FASTENERS.
3. MORTAR BEDDING UNDER THE FIRST COURSE OF BLOCK CELLS TO BE GROUTED SHALL PERMIT GROUT TO COME INTO DIRECT CONTACT WITH FOUNDATION.
4. PLACE MORTAR ON CROSS WEBS ADJACENT TO ALL GROUTED CELLS.
5. MORTAR THAT PROJECTS MORE THAN 1/2" INTO CELLS THAT ARE TO BE GROUTED SHALL BE REMOVED.
6. GROUTED CELLS SHALL BE MECHANICALLY VIBRATED DURING PLACEMENT OF GROUT. TEN MINUTES AFTER PLACING GROUT, EACH GROUTED CELL SHALL BE RECONSOLIDATED WITH A VIBRATOR.
7. METAL LATH SHALL BE PLACED UNDER ALL BOND BEAMS IN ORDER TO CONTAIN GROUT. FELT OR OTHER BOND BREAKING MATERIAL IS NOT PERMITTED. AS AN ALTERNATIVE TO THIS, "U"-SHAPED LINTEL BLOCKS MAY BE USED FOR BOND BEAMS.
8. EITHER LOW LIFT GROUTING OR HIGH LIFT GROUTING PROCEDURES MAY BE UTILIZED, AT THE CONTRACTOR'S OPTION.

LOW LIFT GROUTING PROCEDURE:

1. LAY WALL TO MAXIMUM OF 5'-0".
2. CLEAN MORTAR AND OTHER DEBRIS FROM CELLS TO BE GROUTED.
3. PLACE REINFORCING BARS IN PROPER POSITION.
4. PLACE GROUT UP TO LIFT HEIGHT AND VIBRATE.

HIGH LIFT GROUTING PROCEDURE:

1. CLEANOUT OPENINGS SHALL BE PROVIDED IN THE FACE SHELLS OF THE BOTTOM COURSE OF ALL CELLS TO BE GROUTED. OPENINGS SHALL BE LARGE ENOUGH TO ALLOW REMOVAL OF DEBRIS.
2. LAY WALL TO MAXIMUM POUR HEIGHT AND CLEAN DEBRIS FROM OPENINGS. PLACE REINFORCING BARS IN PROPER POSITION.
3. CLEAN MORTAR AND OTHER DEBRIS FROM CELLS TO BE GROUTED.
4. MASONRY SHALL CURE A MINIMUM OF 4 HOURS PRIOR TO GROUTING.
5. PLACE GROUT TO THE FOLLOWING HEIGHTS: MAXIMUM LIFT HEIGHT IS 5'-0"; MAXIMUM POUR HEIGHT IS 12'-0" UNLESS EXPRESSLY COORDINATED WITH THE STRUCTURAL ENGINEER.
6. AFTER THE LIFT IS POURED, VIBRATE TO ELIMINATE ALL AIR VOIDS. WAIT BETWEEN 3 AND 10 MINUTES, THEN RECONSOLIDATE BY VIBRATING AGAIN. CONTINUE THIS PROCEDURE FOR FULL POUR HEIGHT. RECONSOLIDATE THE PRIOR LIFT BY EXTENDING THE VIBRATOR THROUGH THE CURRENT LIFT INTO THE PREVIOUS LIFT.
7. GROUT SLUMP MUST BE MAINTAINED BETWEEN 10 AND 11 INCHES FOR HIGH LIFT GROUTING.

1 / S400 **DETAIL**

MASONRY GROUT REQUIREMENTS
NTS

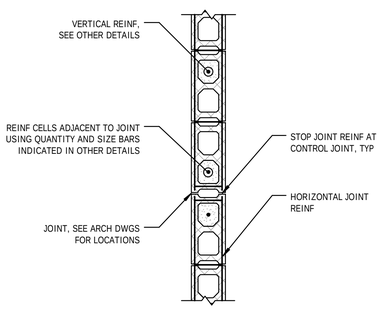

4 / S400 **DETAIL**

TYPICAL CMU CONTROL JOINT
NTS
NOTES:

1. PROVIDE DOWELS TO FOUNDATION MATCHING SIZE OF VERTICAL REINFORCING, TYPICAL. SEE GENERAL NOTES OR MINIMUM SPLICE AND EMBEDMENT LENGTH SCHEDULE FOR LAP REQUIREMENTS.
2. ALL CONTROL JOINT LOCATIONS SHALL BE COORDINATED WITH THE ARCHITECTURAL DRAWINGS AND HAVE A RECOMMENDED MAXIMUM SPACING OF 25 FEET.

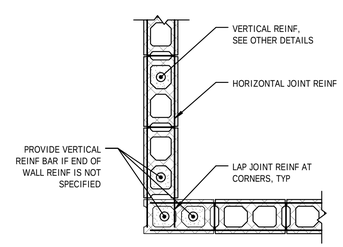

5 / S400 **DETAIL**

TYPICAL CMU CORNER
NTS
NOTES:

1. PROVIDE DOWELS TO FOUNDATION MATCHING SIZE OF VERTICAL REINFORCING, TYPICAL. SEE GENERAL NOTES OR MINIMUM SPLICE AND EMBEDMENT LENGTH SCHEDULE FOR LAP REQUIREMENTS.

MINIMUM SPLICE AND EMBEDMENT LENGTH SCHEDULE

BAR SIZE	LAP SPLICE
#3	27"
#4	36"
#5	45"
#6	54"
#7	63"
#8	72"

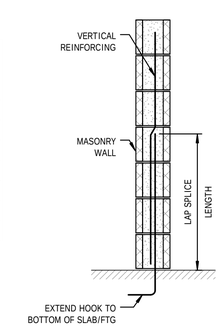

AT CANTILEVERED WALLS
OR WALLS RETAINING SOIL

2 / S400 **DETAIL**

MINIMUM SPLICE AND EMBEDMENT LENGTH SCHEDULE
NTS

CLIENT AND PROJECT

NORTH CAROLINA DEPARTMENT OF TRANSPORTATION

SCO ID NO.: 14-11006-01A

NEW DIVISION 8 OFFICE BUILDING

150 DOT DRIVE
CARTHAGE, NC 28327

DESIGNER

ANDRE JOHNSON ARCHITECT
PO BOX 14637
RALEIGH, NORTH CAROLINA 27620
TELEPHONE: 919.661.6935
MAIL: info@andrejohnsonarchitect.com

© 2015 Andre Johnson Architect, PLLC
Duplication or reproduction by any means without the express written consent of Andre L. Johnson, Architect is a violation of Federal and international law. The information contained on this document is the intellectual property of Andre L. Johnson, Architect and all rights thereto are Reserved. For exceptions, refer to the Owner-Architect Agreement.

CONSULTANT

STEWART
421 FAYETTEVILLE ST.
SUITE 400
RALEIGH, NC 27601
T 919.380.8750
FIRM LICENSE #C-1051
PROJECT S15011.00

REGISTRATION

NORTH CAROLINA PROFESSIONAL ENGINEER SEAL 019042 CHARLES P. LEWIS

08/05/2016

ISSUE

No.	Date	Description

SHEET INFO

TYPICAL MASONRY DETAILS

S400

PROJECT NO: P1423.00
DATE: AUGUST 05, 2016
BID SET

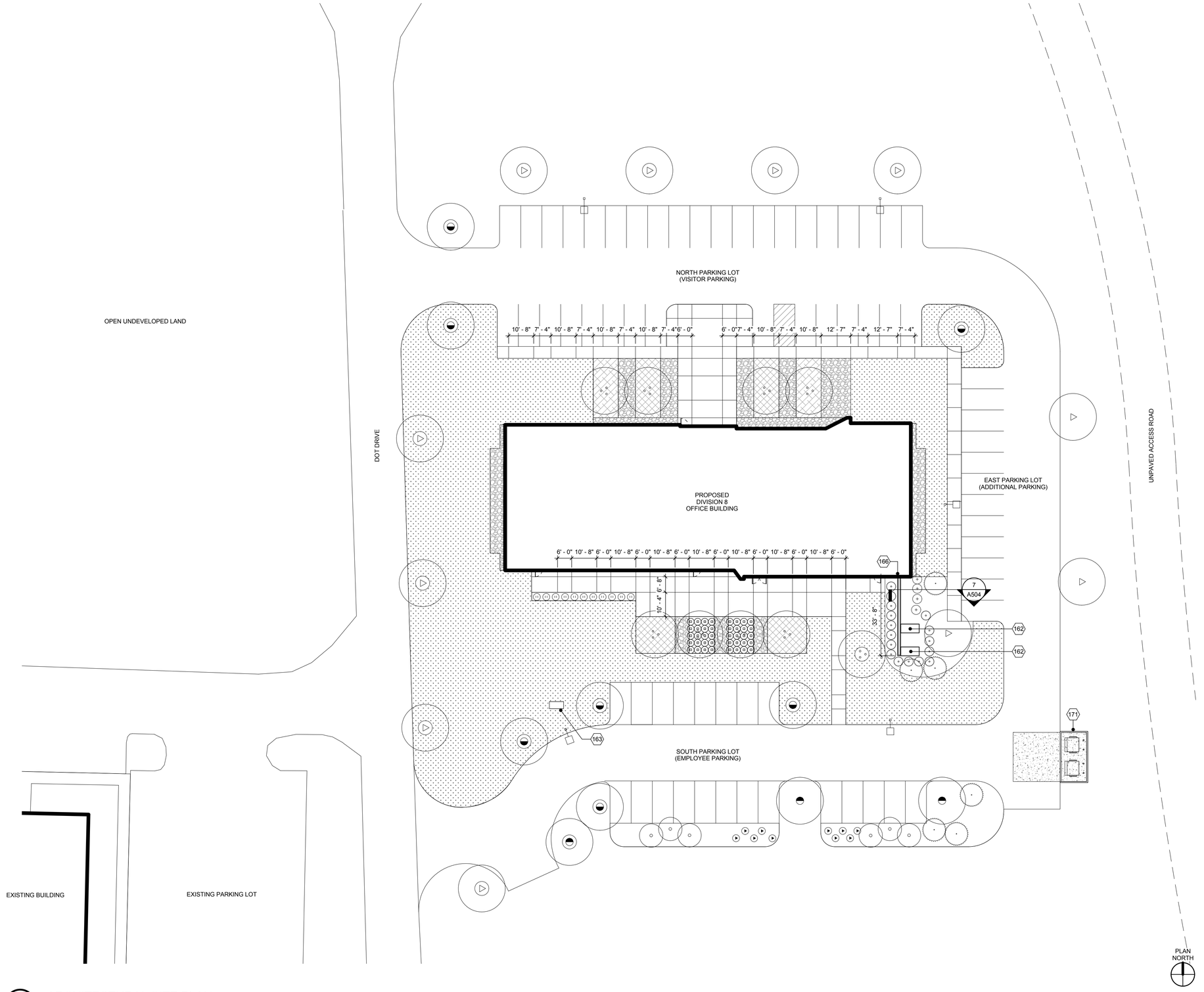

1 ARCHITECTURAL SITE PLAN
1" = 20'-0"

GENERAL NOTES

A. THIS PLAN IS FOR REFERENCE ONLY. REFER TO CIVIL AND LANDSCACPE DOCUMENTS FOR MORE INFORMATION.
B. THE GENERAL CONTRACTOR SHALL CONFIRM AND COORDINATE ALL CIVIL, STRUCTURAL, MECHANICAL, ELECTRICAL AND PLUMBING ITEMS INDICATED ON THIS SHEET.
C. THE GENERAL CONTRACTOR SHALL FIELD VERIFY ALL DIMENSIONS AND REPORT ANY DISCREPANCIES TO THE ARCHITECT.
D. DO NOT SCALE THE SITE PLAN DRAWING TO LOCATE ITEMS IDENTIFIED ON THIS PLAN.
E. DO NOT REFER TO THIS SHEET FOR GRADING AND DRAINAGE, REFER TO CIVIL DRAWINGS FOR GRADING AND DRAINAGE.
F. DO NOT REFER TO THIS SHEET FOR THE BUILDING PLACEMENT OR LOCATION. REFER TO THE CIVIL DRAWINGS.
G. LANDSCAPING INDICATED IS FOR REFERENCE ONLY. ARCHITECT IS NOT RESPONSIBLE FOR THE SCOPE OF LANDSCAPING INDICATED.
H. DIMENSIONS INDICATED SHALL BE CONFIRMED IN THE FIELD.
I. THIS DRAWING DOES NOT SHOW ALL OF THE PROPOSED LANDSCAPING. CONTRACTOR SHALL NOT REFER TO THIS SHEET FOR DETERMINING THE LANDSCAPE SCOPE OF WORK.

SHEET KEYNOTES

162 MECHANICAL HVAC UNIT, REFER TO MECHANICAL DRAWINGS FOR MORE INFORMATION
163 LOCATION OF TRANSFORMER AND PAD, REFER TO ELECTRICAL DRAWINGS FOR MORE INFORMATION
166 HVAC PIPING TROUGH TO STOP SHORT OF FACE OF BUILDING TO ALLOW FOR COMPRESSIBLE FILLER JOINT AT THE INTERSECTION OF BUILDING FACE BRICK AND CMU TROUGH
171 DUMPSTER ENCLOSURE FENCE, REFER TO CIVIL DRAWINGS FOR MORE INFORMATION

CLIENT AND PROJECT

NORTH CAROLINA DEPARTMENT OF TRANSPORTATION

SCO ID NO.: 14-11006-01A

NEW DIVISION 8 OFFICE BUILDING

150 DOT DRIVE
CARTHAGE, NC 28327

DESIGNER

ANDRE JOHNSON ARCHITECT

PO BOX 14637
RALEIGH, NORTH CAROLINA 27620
TELEPHONE: 919.661.6935
MAIL: info@andrejohnsonarchitect.com

© 2016 Andre Johnson Architect, PLLC
Duplication or reproduction by any means without the express written consent of Andre L. Johnson, Architect is a violation of Federal and international law. The information contained on this document is the intellectual property of Andre L. Johnson, Architect and all rights thereto are Reserved. For exceptions, refer to the Owner-Architect Agreement.

CONSULTANT

REGISTRATION

ANDRE JOHNSON ARCHITECT PLLC
CORPORATE ARCHITECTURAL CERTIFICATE
52876
NORTH CAROLINA
RALEIGH, NC

ANDRE LAMAR JOHNSON
ARCHITECT
10528
NORTH CAROLINA
RALEIGH, NC
08/05/16

ISSUE

No.	Date	Description

SHEET INFO

ARCHITECTURAL SITE PLAN

A001

PROJECT NO: P1423.00
DATE: AUGUST 5, 2016
BID DOCUMENTS

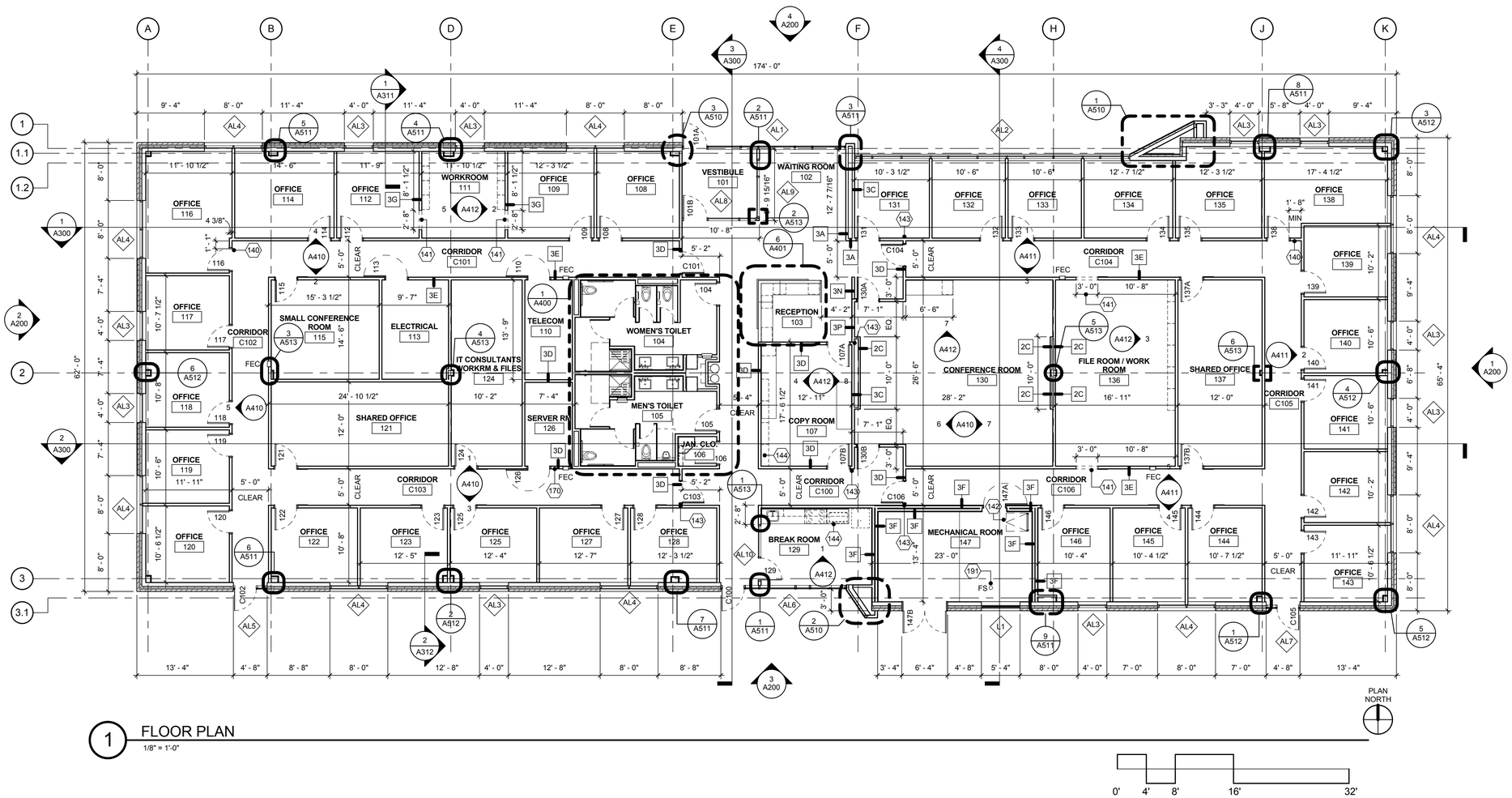

1 FLOOR PLAN

1/8" = 1'-0"

GENERAL NOTES

A. ALL EXTERIOR DIMENSIONS INDICATED ARE FROM THE FACE OF EXTERIOR FINISH FOR EXTERIOR WALLS.
B. ALL INTERIOR DIMENSIONS INDICATED ARE FROM THE FACE OF GYPSUM WALLBOARD FOR INTERIOR WALLS UNLESS NOTED OTHERWISE.
C. WHERE DIMENSIONS ARE INDICATED TO BE "CLEAR", THE CLEAR DIMENSION IS MEASURED FROM THE FACE OF FINISH, WHICH MAY INCLUDE WALL TILE.
D. REFER TO STRUCTURAL DRAWINGS FOR STRUCTURAL GRID DIMENSIONS.
E. ALL DOORS SHALL BE LOCATED 6" FROM FACE OF NEAREST PARTITION TO INSIDE EDGE OF THE JAMB AT THE HINGE SIDE, U.N.O.
F. CONTRACTOR SHALL FIELD VERIFY ALL DIMENSIONS AND REPORT AND DISCREPANCIES TO THE ARCHITECT PROMPTLY.
G. CONTRACTOR SHALL BE REQUIRED TO PROVIDE BLOCKING IN WALLS FOR ALL EQUIPMENT AND ACCESSORIES IDENTIFIED IN THE SPECIFICATIONS.
H. ALL BLOCKING TO BE PROVIDED BY THE CONTRACTOR. REFER TO SPECIFICATION SECTION 06 1053 MISCELLANEOUS ROUGH CARPENTRY FOR MORE INFORMATION.
I. SHEET KEYNOTES SHALL BE APPLICABLE TO THE SHEET IN WHICH THEY APPEAR.
J. REFER TO SHEET A500 FOR EXTERIOR WALL ASSEMBLY TYPES.
K. REFER TO SHEETA501 FOR INTERIOR WALL PARTITION TYPES.
L. ALL WALL TYPES ARE WALL TYPE 3G UNLESS NOTED OTHERWISE.
M. WHERE IDENTIFIED ON THIS SHEET "FEC" INDICATES LOCATION OF FIRE EXTINGUISHER CABINET AND FIRE EXTINGUISHER. REFER TO SPECIFICATION DIVISION 10 FOR MORE INFORMATION.

SHEET KEYNOTES

140 DISTANCE OF DOOR FRAME SHALL BE DETERMINED BY IDENTIFIED DIMENSION INDICATED AT STRIKE SIDE OF DOOR FRAME
141 FRAMED OPENING IN WIDTH INDICATED. HEIGHT OF FRAMED OPENING IS 7'-2" UNLESS NOTED OTHERWISE
142 DASHED LINE OF ROOF HATCH ABOVE
143 4 INCH WALL RETURN AT JAMB
144 REFER TO EQUIPMENT AND FURNITURE PLAN FOR MORE INFORMATION ON OWNER PROVIDED EQUIPMENT IN THIS AREA
170 CARD READER LOCATION. COORDINATE WITH ELECTRICAL DWGS. OWNER TO INSTALL CARD READER
191 COORDINATE FLOOR SINK LOCATION WITH PLUMBING DRAWINGS, P401.

WALL TYPE LEGEND

3A WALL TYPE SYMBOL - REFER TO SHEET A500-A502 FOR WALL TYPE CONSTRUCTION & RATINGS

NEW UNRATED STUD WALL

CLIENT AND PROJECT

NORTH CAROLINA DEPARTMENT OF TRANSPORTATION

SCO ID NO.: 14-11006-01A

NEW DIVISION 8 OFFICE BUILDING

150 DOT DRIVE
CARTHAGE, NC 28327

DESIGNER

ANDRE JOHNSON ARCHITECT
PO BOX 14637
RALEIGH, NORTH CAROLINA 27620
TELEPHONE: 919.661.6935
MAIL: info@andrejohnsonarchitect.com

© 2016 Andre Johnson Architect, PLLC
Duplication or reproduction by any means without the express written consent of Andre L. Johnson, Architect is a violation of Federal and international law. The information contained on this document is the intellectual property of Andre L. Johnson, Architect and all rights thereto are Reserved. For exceptions, refer to the Owner-Architect Agreement.

CONSULTANT

REGISTRATION

ANDRE JOHNSON ARCHITECT PLLC
REGISTERED ARCHITECTURAL CORPORATION
52876
NORTH CAROLINA
RALEIGH, NC

ANDRE LAMAR JOHNSON
REGISTERED ARCHITECT
10528
NORTH CAROLINA
RALEIGH, NC
08/05/16

ISSUE

No.	Date	Description

SHEET INFO

FLOOR PLAN

A101

PROJECT NO: P1423.00
DATE: AUGUST 5, 2016
BID DOCUMENTS

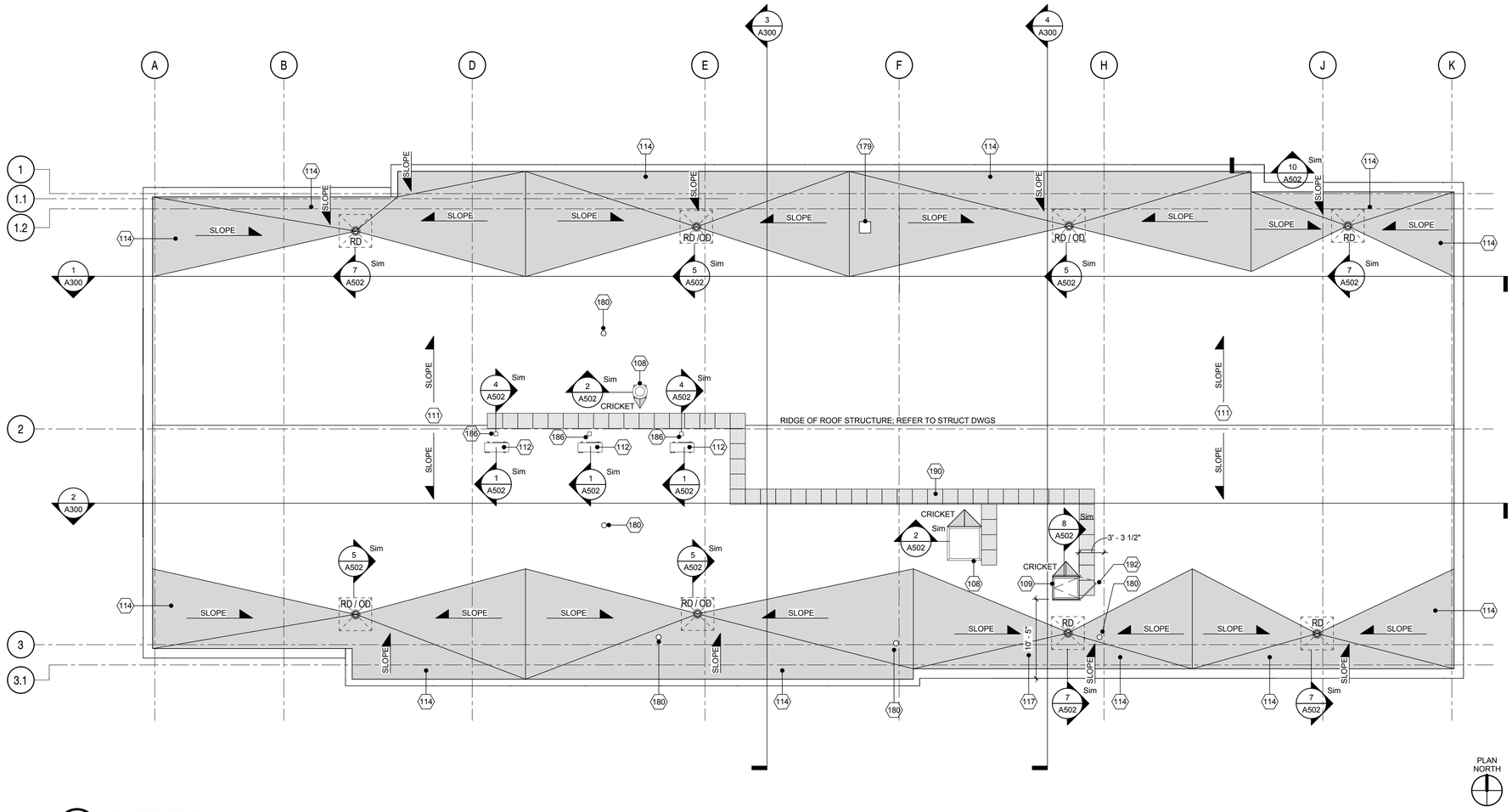

1 ROOF LEVEL

1/8" = 1'-0"

0' 4' 8' 16' 32'

GENERAL NOTES

A. ALL ROOF SLOPES INDICATED FOR THE ROOF SHALL BE 1/4" PER FOOT U.N.O.
B. THE GENERAL CONTRACTOR SHALL FIELD VERIFY ALL DIMENSIONS & PROMPTLY REPORT ANY DISCREPANCIES TO THE ARCHITECT.
C. EQUIPMENT INDICATED ON THE ROOF PLAN IS FOR INFORMATION ONLY. THE GENERAL CONTRACTOR SHALL REFER TO THE MECHANICAL, ELECTRICAL AND PLUMBING DRAWINGS FOR ITEMS.
D. ALL PIPE PENETRATIONS ARE NOT INDICATED ON THIS ROOF PLAN. CONFIRM ALL PIPE PENETRATIONS REQUIRED FOR PME AND USE IDENTIFIED ROOFING DETAILS FOR PIPE PENETRATIONS.
E. HATCHED AREAS INDICATE THE EXTENT OF TAPERED INSULATION.
F. SLOPE OF TAPERED INSULATION AT THE ROOF EDGE MAY EXCEED 1/4" PER FOOT TO ACHIEVE DESIGN INTENT. CONTRACTOR TO ENSURE SLOPE IS NOT LESS THAN 1/4" PER FOOT.

SHEET KEYNOTES

108 ROOF EXHAUST FAN; REFER TO MECHANICAL DRAWINGS
109 ROOF HATCH
111 ROOF STRUCTURE SLOPES; REFER TO STRUCTURAL DRAWINGS
112 ROOF TOP MECHANICAL EQUIPMENT. REFER TO MECHANICAL DRAWINGS FOR MORE INFORMATION ON SPECIFIC EQUIPMENT
114 NOTE AT ROOF EDGE. TAPERED INSULATION IS BUILT UP TO PRODUCE ROOF EDGE WITH NO PARAPET. SLOPE MAY EXCEED 1/4" BUT SHALL NOT BE LESS THAN 1/4" PER FOOT; REFER TO SECTIONS AND SECTION DETAILS FOR MORE INFORMATION
117 MINIMUM DISTANCE FROM EDGE OF ROOF TO ROOF HATCH. RAILING NOT REQUIRED PER 2012 NC BUILDING CODE 1013.6
179 ROOF MOUNTED PHOTOCELL, REFER TO ELECTRICAL DRAWINGS, SHEET E003
180 ROOF VENT PIPE PENETRATION, REFER TO PLUMBING DRAWINGS FOR MORE INFORMATION ON PIPE SIZE AND LOCATION.
186 NOTE THERE ARE 6 TOTAL PIPE PENETRATIONS THROUGH ROOF AT EACH ROOF TOP UNIT; COORDINATE LOCATION WITH M102, HOWEVER ARCHITECTURAL LOCATION SHALL GOVERN.
190 ROOF WALKWAY PADS, TYPICAL.
192 ROOF HATCH FALL PROTECTION RAILING.

CLIENT AND PROJECT

STATE OF NORTH CAROLINA DEPARTMENT OF TRANSPORTATION

NORTH CAROLINA DEPARTMENT OF TRANSPORTATION

SCO ID NO.: 14-11006-01A

NEW DIVISION 8 OFFICE BUILDING

150 DOT DRIVE
CARTHAGE, NC 28327

DESIGNER

ANDRE JOHNSON ARCHITECT
PO BOX 14637
RALEIGH, NORTH CAROLINA 27620
TELEPHONE: 919.661.6935
MAIL: info@andrejohnsonarchitect.com

© 2016 Andre Johnson Architect, PLLC
Duplication or reproduction by any means without the express written consent of Andre L. Johnson, Architect is a violation of Federal and international law. The information contained on this document is the intellectual property of Andre L. Johnson, Architect and all rights thereto are Reserved. For exceptions, refer to the Owner-Architect Agreement.

CONSULTANT

REGISTRATION

ANDRE JOHNSON ARCHITECT, PLLC
ARCHITECTURAL CORPORATION
52876
NORTH CAROLINA
RALEIGH, NC

ANDRE LAMAR JOHNSON
10528
NORTH CAROLINA
RALEIGH, NC
08/05/16

ISSUE

No.	Date	Description

SHEET INFO

ROOF PLAN

A102

PROJECT NO: P1423.00
DATE: AUGUST 5, 2016
BID DOCUMENTS

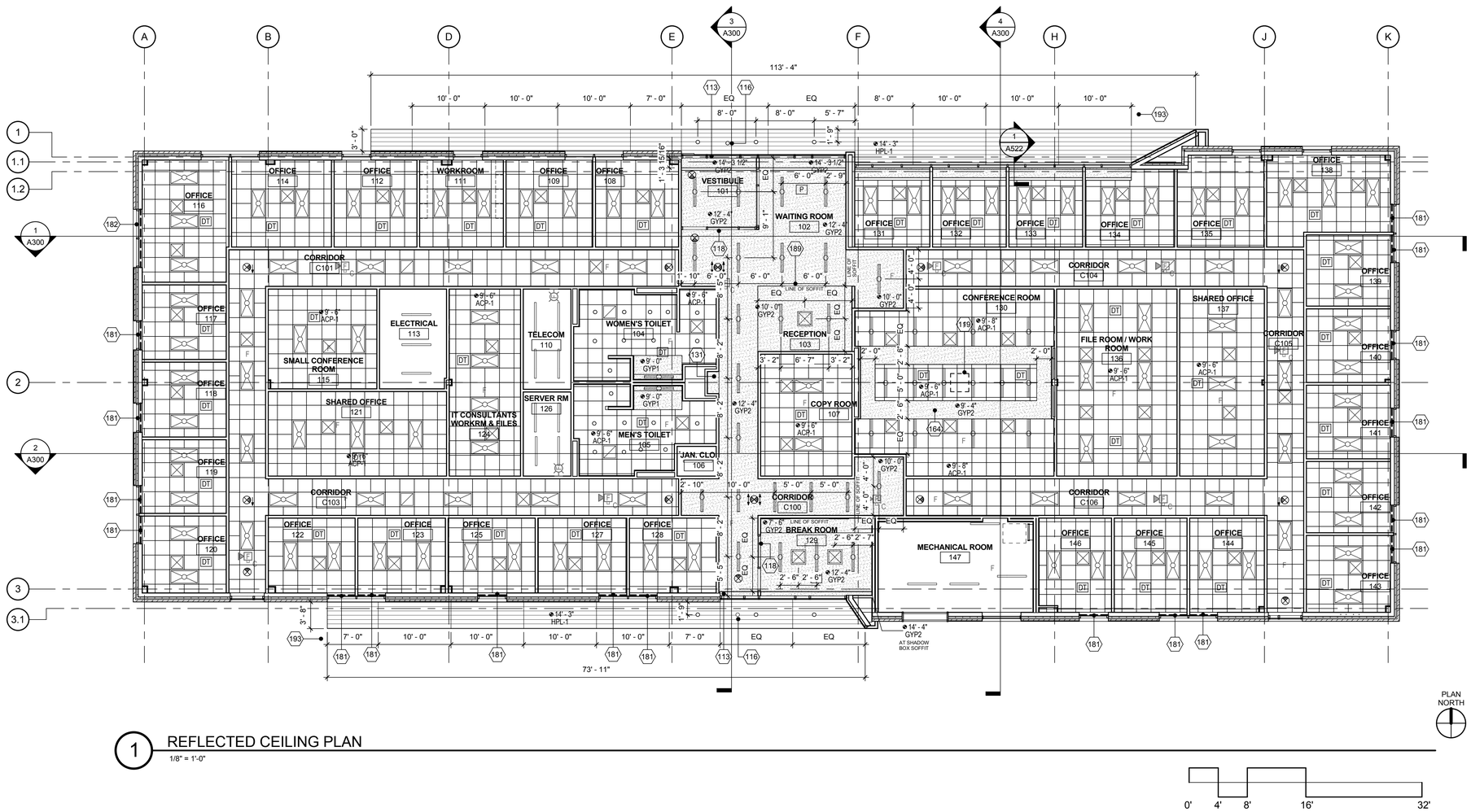

1 REFLECTED CEILING PLAN
1/8" = 1'-0"

GENERAL NOTES

A. CONTRACTOR SHALL FIELD VERIFY ALL DIMENSIONS AND REPORT ANY DISCREPANCIES TO THE ARCHITECT.
B. CONTRACTOR SHALL CONFIRM AND COORDINATE ALL STRUCTURAL, MECHANICAL, ELECTRICAL AND PLUMBING WORK.
C. REFER TO FINISH SCHEDULE FOR ACOUSTICAL CEILING PANEL TYPE, U.N.O.
D. ELECTRICAL, MECHANICAL AND FIRE PROTECTION ITEMS ARE SHOWN FOR COORDINATION. REFER TO ENGINEERING DRAWINGS FOR SPECIFICATIONS / DETAILS AND MORE INFORMATION ON ITEMS INDICATED FOR COORDINATION.
E. SEE MECHANICAL DRAWINGS FOR SUPPLY / RETURN REGISTERS. ITEMS ARE SHOWN ON ARCHITECTURAL DRAWINGS FOR REFERENCE ONLY.
F. SEE ELECTRICAL DRAWINGS FOR LIGHT FIXTURES. ITEMS ARE SHOWN ON ARCHITECTURAL DRAWINGS FOR REFERENCE ONLY.
G. ALL CEILINGS AT EXTERIOR WALLS SHALL HAVE GWB SHADOW BOX.
H. ALL CEILINGS ARE 10'-8" UNLESS NOTED OTHERWISE.

SHEET KEYNOTES

113 GYPSUM WALL BOARD SOFFIT AT THESE LOCATIONS; REFER TO DETAIL 4 ON A520
116 LOCATION OF CEILING MOUNTED CAMERA. CENTER CAMERA BETWEEN LIGHTS
118 ALL INTERIOR GLASS STOREFRONT SHALL HAVE WALL TYPE 3G ABOVE THAT EXTENDS ALL TO THE DECK AS IS CONSTRUCTED PER SHEET A501 FOR PARTITION CONSTRUCTION
119 FUTURE CEILING MOUNTED PROJECTOR
131 SOFFIT OVER DRINKING FOUNTAIN AT 7'-0"
164 ENTIRE SUSPENDED GYPSUM WALL BOARD CEILING INCLUDING EXPOSED VERTICAL AND HORIZONTAL SURFACES SHALL BE PAINTED PT-5
181 HORIZONTAL LOUVER BLIND AT LOCATION SHOWN. HORIZONTAL LOUVER BLIND SHALL BE 4'-0" WIDE X 10'-0" HIGH, COORDINATE WITH FRAMED OPENING
182 HORIZONTAL LOUVER BLIND AT LOCATION SHOWN. HORIZONTAL LOUVER BLIND SHALL BE 8'-0" WIDE X 10'-0" HIGH, COORDINATE WITH FRAMED OPENING
189 ALIGN SOFFIT WITH FINISHED EDGE OF WALL, CONFIRM EXACT DIMENSION WITH IN FIELD CONDITIONS.
193 DIMENSIONS INDICATED ARE FOR PHENOLIC PANEL JOINT LOCATION.

CEILING LEGEND

12'-0" ACP1 — SPOT ELEVATION INDICATING HEIGHT OF CEILING ABOVE FINISH FLOOR & CEILING TYPE / FINISH
SUSPENDED GYP . CEILING TYP.
2' X 2' ACOUSTICAL PANEL CEILING TYP.
INDICATES NO CEILING TYP.

WALL TYPE LEGEND

3A — WALL TYPE SYMBOL - REFER TO SHEET A500-A502 FOR WALL TYPE CONSTRUCTION & RATINGS
NEW UNRATED STUD WALL

CLIENT AND PROJECT

NORTH CAROLINA DEPARTMENT OF TRANSPORTATION

SCO ID NO.: 14-11006-01A

NEW DIVISION 8 OFFICE BUILDING

150 DOT DRIVE
CARTHAGE, NC 28327

DESIGNER

ANDRE JOHNSON ARCHITECT
PO BOX 14637
RALEIGH, NORTH CAROLINA 27620
TELEPHONE: 919.661.6935
MAIL: info@andrejohnsonarchitect.com

© 2016 Andre Johnson Architect, PLLC
Duplication or reproduction by any means without the express written consent of Andre L. Johnson, Architect is a violation of Federal and international law. The information contained on this document is the intellectual property of Andre L. Johnson, Architect and all rights thereto are Reserved. For exceptions, refer to the Owner-Architect Agreement.

CONSULTANT

REGISTRATION

ANDRE JOHNSON ARCHITECT, PLLC — 52876 — RALEIGH, NC

ANDRE L. MAR JOHNSON — 10528 — RALEIGH, NC — 08/05/16

ISSUE

No.	Date	Description

SHEET INFO

REFLECTED CEILING PLAN

A131

PROJECT NO: P1423.00
DATE: AUGUST 5, 2016
BID DOCUMENTS

1 FINISHES FLOOR PLAN

1/8" = 1'-0"

ROOM FINISH SCHEDULE				
ROOM NO.	ROOM NAME	FLOOR	BASE	WALL
101	VESTIBULE	VCT-1	RB-1	PT-2
102	WAITING ROOM	VCT-1	RB-1	PT-2
103	RECEPTION	VCT-1	RB-1	PT-2
104	WOMEN'S TOILET	CT-2	CT-3	PT-2
105	MEN'S TOILET	CT-2	CT-3	PT-2
106	JAN. CLO.	VCT-1	CT-3	PT-2
107	COPY ROOM	CPT-1	RB-2	PT-2
108	OFFICE	CPT-1	RB-2	PT-2
109	OFFICE	CPT-1	RB-2	PT-2
110	TELECOM	SEALED EXPOSED CONCRETE	NO BASE	PT-2
111	WORKROOM	CPT-1	RB-2	PT-2
112	OFFICE	CPT-1	RB-2	PT-2
113	ELECTRICAL	SEALED EXPOSED CONCRETE	NO BASE	PT-2
114	OFFICE	CPT-1	RB-2	PT-2
115	SMALL CONFERENCE ROOM	CPT-1	RB-2	PT-2
116	OFFICE	CPT-1	RB-2	PT-2
117	OFFICE	CPT-1	RB-2	PT-2
118	OFFICE	CPT-1	RB-2	PT-2
119	OFFICE	CPT-1	RB-2	PT-2
120	OFFICE	CPT-1	RB-2	PT-2
121	SHARED OFFICE	CPT-1	RB-2	PT-2
122	OFFICE	CPT-1	RB-2	PT-2
123	OFFICE	CPT-1	RB-2	PT-2
124	IT CONSULTANTS WORKRM & FILES	VCT-1	RB-1	PT-2
125	OFFICE	CPT-1	RB-2	PT-2
126	SERVER RM	SEALED EXPOSED CONCRETE	NO BASE	PT-2
127	OFFICE	CPT-1	RB-2	PT-2
128	OFFICE	CPT-1	RB-2	PT-2
129	BREAK ROOM	VCT-1	RB-1	PT-2
130	CONFERENCE ROOM	CPT-1	RB-2	PT-2
131	OFFICE	CPT-1	RB-2	PT-2
132	OFFICE	CPT-1	RB-2	PT-2
133	OFFICE	CPT-1	RB-2	PT-2
134	OFFICE	CPT-1	RB-2	PT-2
135	OFFICE	CPT-1	RB-2	PT-2
136	FILE ROOM / WORK ROOM	CPT-1	RB-2	PT-2
137	SHARED OFFICE	CPT-1	RB-2	PT-2
138	OFFICE	CPT-1	RB-2	PT-2
139	OFFICE	CPT-1	RB-2	PT-2
140	OFFICE	CPT-1	RB-2	PT-2
141	OFFICE	CPT-1	RB-2	PT-2
142	OFFICE	CPT-1	RB-2	PT-2
143	OFFICE	CPT-1	RB-2	PT-2
144	OFFICE	CPT-1	RB-2	PT-2
145	OFFICE	CPT-1	RB-2	PT-2
146	OFFICE	CPT-1	RB-2	PT-2
147	MECHANICAL ROOM	SEALED EXPOSED CONCRETE	NO BASE	PT-2
C100	CORRIDOR	VCT-1	RB-1	PT-2
C101	CORRIDOR	VCT-1	RB-1	PT-2
C102	CORRIDOR	VCT-1	RB-1	PT-2
C103	CORRIDOR	VCT-1	RB-1	PT-2
C104	CORRIDOR	VCT-1	RB-1	PT-2
C105	CORRIDOR	VCT-1	RB-1	PT-2
C106	CORRIDOR	VCT-1	RB-1	PT-2

REFER TO INTERIOR ELEVATIONS ON SHEETS A400, A410 AND A411 FOR ADDITIONAL INFORMATION ON WALL FINISHES IN ROOMS. SOME ROOMS INDICATED ON THIS PLAN HAVE MULTIPLE WALL FINISHES AND THE LOCATION OF THE FINISHES WHERE APPLICABLE ARE SHOWN ON INTERIOR ELEVATIONS. REFER TO SPECIFICATION SECTION 03 3000 FOR INFORMATION ON THE REQUIRED CONCRETE SEALAER.

GENERAL NOTES

A. "CT" IS THE DESIGNATION USED FOR PORCELAIN TILE FOR THIS PROJECT. THIS NOTE SUPERSEDES THE ABBREVIATION "CT" IDENTIFIED ON SHEET A-001.
B. REFER TO INTERIOR ELEVATION DRAWINGS FOR ADDITIONAL INFORMATION FOR WALL FINISHES.
C. THE GENERAL CONTRACTOR SHALL CONFIRM AND COORDINATE ALL CIVIL, STRUCTURAL, MECHANICAL, ELECTRICAL, & PLUMBING ITEMS THAT ARE IDENTIFIED IN THIS DRAWING.
D. THE GENERAL CONTRACTOR SHALL FIELD VERIFY ALL DIMENSIONS & PROMPTLY REPORT ANY DISCREPANCIES TO THE ARCHITECT.
E. EQUIPMENT INDICATED WITH A DASHED LINE OR NOTED AS "NIC" (NOT IN THE CONTRACT) IS NOT PART OF THE CONTRACT. WHERE INSTALLATION IS REQUIRED BY CONTRACT DOCUMENTS, INSTALLATION SHALL BE PART OF THE CONTRACTORS WORK AND SHALL BE COMPLETE.
F. IN ALL CASES BLOCKING REQUIRED FOR ITEMS NOT IN CONTRACT SHALL BE FURNISHED AND INSTALLED BY THE CONTRACTOR AND COORDINATED WITH THE OWNER.
G. REFER TO STRUCTURAL DRAWINGS FOR STRUCTURAL GRID DIMENSIONS.
H. REFER TO SHEET A-501 FOR WALL PARTITION TYPES.
I. REFER TO SPECIFICATIONS FOR MORE INFORMATION ON TRANSITION THRESHOLDS BETWEEN DIFFERENT FLOOR FINISHES. UNLESS NOTED OTHERWISE ON THIS SHEET ALL FLOOR MATERIAL TRANSITIONS SHALL HAVE A TRANSITION STRIP / THRESHOLD AS SPECIFIED IN 09 6513.
J. NOTE THAT THE DIRECTION ARROW INDICATED ON THE FLOOR FINISH PLAN INDICATES THE DIRECTION OF THE LONG EDGE OF THE VCT OR THE DIRECTION OF THE LINEAR PATTERN OF THE CARPET TILE. REFER TO SPECIFICATIONS FOR MORE INFORMATION ON THE FLOOR FINISHES.

SHEET KEYNOTES

122 MOSAIC TILE STOPS AT THE FRONT FACE OF THE TOILET PARTITION
123 VCT TILE IN JANITOR CLOSET MATCHES THE DIRECTION OF CORRIDOR C100
125 CT-2 WALL TILE FROM FLOOR UP TO 2'-0" ON ENTIRE LENGTH OF WALL INDICATED
178 EXPOSED COLUMN TO BE PROPERLY PREPARED AND PAINTED PT-4
188 PL-3 RETURNS TO COVER EDGE OF PLYWOOD PANEL.

FINISHES LEGEND

EXPOSED CONCRETE FLOOR
VINYL COMPOSITION TILE
PORCELAIN TILE
CARPET TILE
PORCELAIN MOSAIC TILE

WALL TYPE LEGEND

3A WALL TYPE SYMBOL - REFER TO SHEET A501FOR WALL TYPE CONSTRUCTION & RATINGS
NEW UNRATED STUD WALL

CLIENT AND PROJECT

NORTH CAROLINA DEPARTMENT OF TRANSPORTATION

SCO ID NO.: 14-11006-01A

NEW DIVISION 8 OFFICE BUILDING

150 DOT DRIVE
CARTHAGE, NC 28327

DESIGNER

ANDRE JOHNSON ARCHITECT
PO BOX 14637
RALEIGH, NORTH CAROLINA 27620
TELEPHONE: 919.661.6935
MAIL: info@andrejohnsonarchitect.com

© 2016 Andre Johnson Architect, PLLC
Duplication or reproduction by any means without the express written consent of Andre L. Johnson, Architect is a violation of Federal and international law. The information contained on this document is the intellectual property of Andre L. Johnson, Architect and all rights thereto are Reserved. For exceptions, refer to the Owner-Architect Agreement.

CONSULTANT

REGISTRATION

ANDRE JOHNSON ARCHITECT, PLLC
ARCHITECTURAL CORPORATION
52876
NORTH CAROLINA
RALEIGH, NC

ANDRE LAMAR JOHNSON
PROFESSIONAL ENGINEER SEAL
10528
NORTH CAROLINA
RALEIGH, NC
08/05/16

ISSUE

No.	Date	Description

SHEET INFO

FLOOR FINISH PLAN & FINISH SCHEDULE

A141

PROJECT NO: P1423.00
DATE: AUGUST 5, 2016
BID DOCUMENTS

1 EQUIPMENT AND FURNITURE PLAN

1/8" = 1'-0"

GENERAL NOTES

A. COORDINATE ALL EQUIPMENT REQUIREMENTS WITH MECHANICAL, PLUMBING, AND ELECTRICAL WORK.
B. CONTRACTOR TO COORDINATE BLOCKING FOR ALL WALL AND CEILING MOUNTED ITEMS.
C. EQUIPMENT SHOWN DASHED IS NOT IN CONTRACT UNLESS OTHERWISE NOTED.
D. FOR SCOPES OF WORK INDICATED AS CFCI, REFER TO THE CONTRACT DOCUMENTS FOR MORE INFORMATION.
E. FOR THIS SHEET, THE FOLLOWING ANNOTATIONS APPLY: (OFCI = OWNER FURNISHED CONTRACTOR INSTALLED.
F. FOR THIS SHEET, THE FOLLOWING ANNOTATIONS APPLY: (OFOI = OWNER FURNISHED OWNER INSTALLED.
G. FOR THIS SHEET, THE FOLLOWING ANNOTATIONS APPLY: (CFCI = CONTRACTOR FURNISHED CONTRACTOR INSTALLED.
H. FOR THIS SHEET, THE FOLLOWING ANNOTATIONS APPLY: (OFVI = OWNER FURNISHED VENDOR INSTALLED.
I. NOTE THAT THIS PLAN DOES NOT INDICATE ALL OF THE OWNER PROVIDED AND OWNER INSTALLED FURNITURE AND EQUIPMENT.
J. EQUIPMENT AND FURNITURE SHOWN IS INDICATED FOR REFERENCE ONLY.

SHEET KEYNOTES

145 REFRIGERATOR (OFOI)
146 COUNTER TOP MICROWAVE (OFOI)
147 FUTURE LOCATION FOR SURFACE COOK TOP (OFOI)
148 COUNTER TOP COFFEE MAKER (OFOI)
149 MAIL SLOTS (OFOI)
150 WALL MOUNTED PHONE (OFOI)
151 COPIER (OFOI)
152 PAPER SHREDDER (OFOI)
153 TABLE TOP PRINTER (OFOI)
154 TABLE TOP FAX MACHINE (OFOI)
155 LOCATION FOR BULLETIN BOARD (OFOI)
156 COMPUTER, MONITOR, KEYBOARD AND MOUSE (OFOI)
157 WALL MOUNTED TV, CONTRACTOR TO PROVIDE BLOCKING IN WALL FOR TV WALL MOUNTED BRACKET (OFOI)
158 CEILING MOUNTED PROJECTOR (OFOI)
159 DESK TOP PHONE (OFOI)
160 ICE MACHINE. REFER TO PLUMBING DRAWINGS FOR MORE INFORMATION (OFOI)

WALL TYPE LEGEND

3A WALL TYPE SYMBOL - REFER TO SHEET A501 FOR WALL TYPE CONSTRUCTION & RATINGS

NEW UNRATED STUD WALL

CLIENT AND PROJECT

NORTH CAROLINA DEPARTMENT OF TRANSPORTATION

SCO ID NO.: 14-11006-01A

NEW DIVISION 8 OFFICE BUILDING

150 DOT DRIVE
CARTHAGE, NC 28327

DESIGNER

ANDRE JOHNSON ARCHITECT

PO BOX 14637
RALEIGH, NORTH CAROLINA 27620
TELEPHONE: 919.661.6935
MAIL: info@andrejohnsonarchitect.com

© 2016 Andre Johnson Architect, PLLC
Duplication or reproduction by any means without the express written consent of Andre L. Johnson, Architect is a violation of Federal and international law. The information contained on this document is the intellectual property of Andre L. Johnson, Architect and all rights thereto are Reserved. For exceptions, refer to the Owner-Architect Agreement.

CONSULTANT

REGISTRATION

ANDRE JOHNSON ARCHITECT PLLC
ARCHITECTURAL CORPORATION
52876
NORTH CAROLINA
RALEIGH, NC

ANDRE L. JOHNSON
NORTH CAROLINA
10528
RALEIGH, NC
08/05/16

ISSUE

No.	Date	Description

SHEET INFO

EQUIPMENT FLOOR PLAN

A151

PROJECT NO: P1423.00
DATE: AUGUST 5, 2016
BID DOCUMENTS

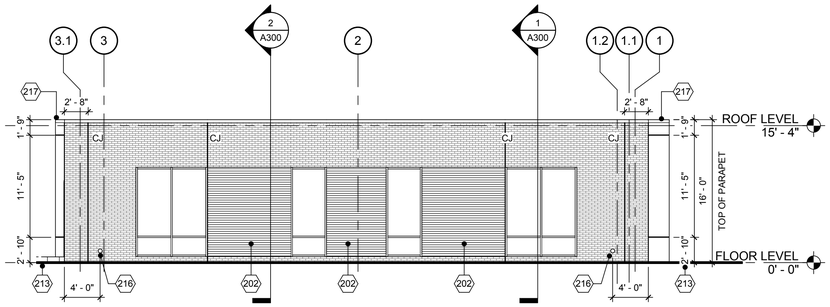

1 EAST ELEVATION
1/8" = 1'-0"

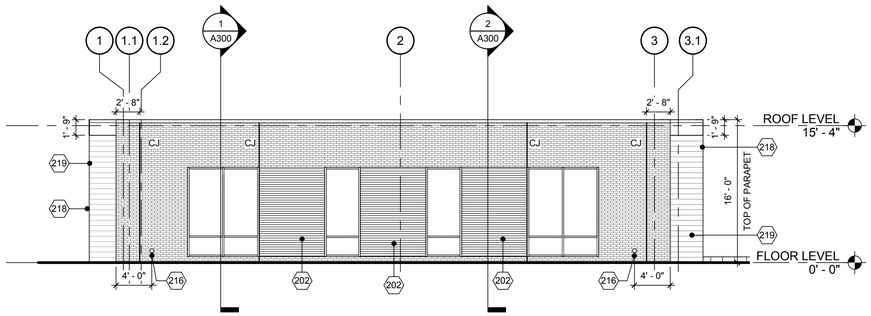

2 WEST ELEVATION
1/8" = 1'-0"

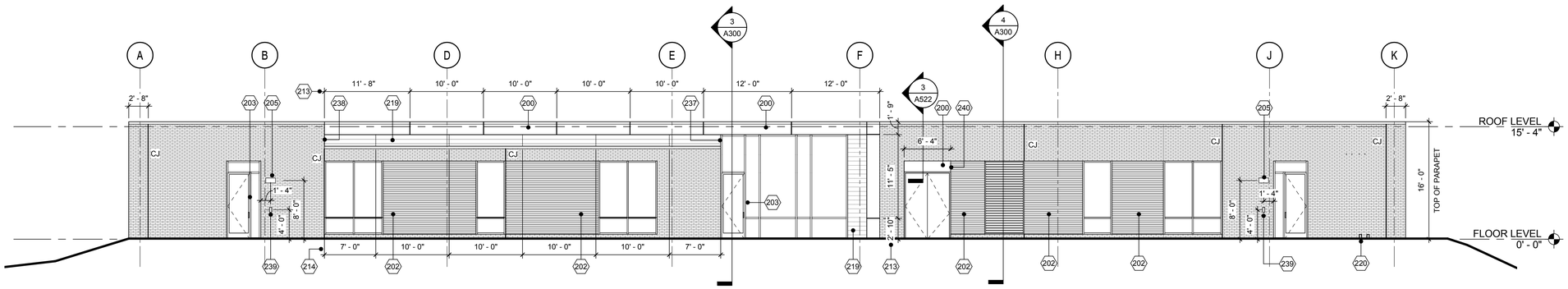

3 SOUTH ELEVATION
1/8" = 1'-0"

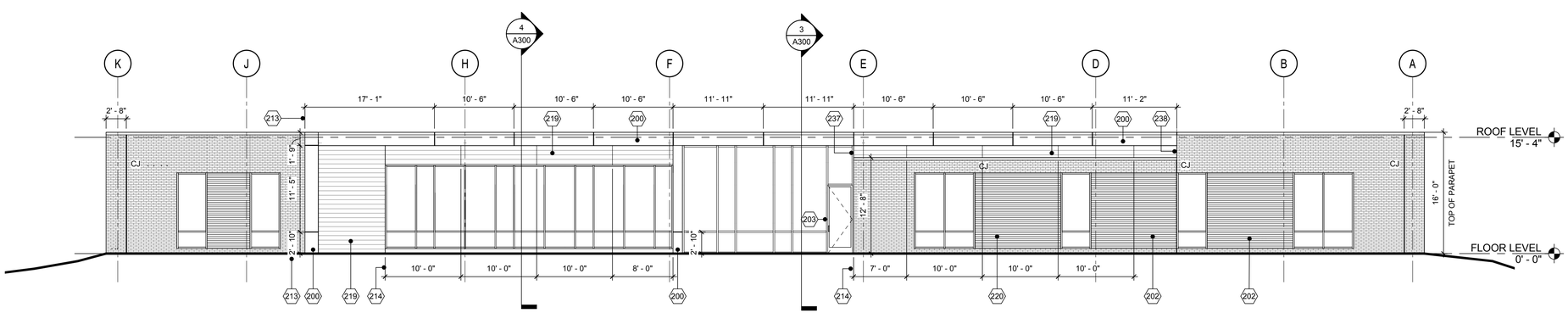

4 NORTH ELEVATION
1/8" = 1'-0"

GENERAL NOTES

A. THE GENERAL CONTRACTOR SHALL FIELD VERIFY ALL DIMENSIONS & REPORT ANY DISCREPANCIES TO THE ARCHITECT.
B. ALL DIMENSIONS INDICATED SHALL BE TO THE FACE OF FINISHED MATERIAL UNLESS NOTED OTHERWISE.
C. CONTROL JOINTS SHALL BE INSTALLED PER THE BRICK INDUSTRY ASSOCIATION'S TECHNICAL NOTES 18A (WWW.BIA.ORG).
D. HATCHED AREAS INDICATE AREAS OF SPECIALTY BRICK WORK. REFER TO ENLARGED ELEVATIONS AND EXTERIOR DETAILS FOR MORE INFORMATION.

SHEET KEYNOTES

200 NON-INSULATED METAL WALL PANELS
202 AREA OF BRICK VENEER WHERE EACH ALTERNARE BRICK COURSE IS RECESSED 1/2 INCH
203 CARD READER (NIC) INSTALLED ON MULLION INSTALLED NOT MORE THAN 4'-0" O.C.
205 EXTERIOR WALL MOUNTED LIGHT FIXTURE; REFER TO ELECTRICAL DRAWINGS
213 DIMENSIONS INDICATE METAL WALL PANEL JOINT DIMENSIONS
214 DIMENSIONS INDICATE PHENOLIC WALL PANEL JOINT DIMENSIONS
216 DOWNSPOUT DISCHARGE AND COVER, REFER TO PLUMBING SPECIFICATIONS AND DRAWINGS FOR MORE INFORMATION
217 METAL WALL PANELS BEYOND
218 PHENOLIC WALL PANELS BEYOND, NOTE THAT WALL IS ANGLED; REFER TO FLOOR PLAN FOR MORE INFORMATION
219 PHENOLIC PANEL SHALL BE INSTALLED IN A STACKED BOND PATTERN IN ALL LOCATIONS, UNLESS NOTED OTHERWISE
220 REFER TO SHEET A001 FOR LOCATION OF HVAC PIPING TROUGH AND SHEET A503 FOR DETAILS FOR HVAC PIPING TROUGH IN THIS LOCATION
237 REFER TO DETAIL 7/A512 FOR CONSTRUCTION IN THIS AREA
238 REFER TO DETAIL 8/A512 FOR CONSTRUCTION IN THIS AREA
239 CARD READER LOCATION, REFER TO ELECTRICAL DRAWINGS FOR CONTRACTOR SCOPE
240 REFER TO DETAIL 4/A510 FOR CONSTRUCTION IN THIS AREA

MATERIALS LEGEND

BRICK VENEER, REFER TO SPECIFICATIONS FOR MORE INFORMATION

AREA OF RECESSED BRICK, REFER TO SPECIFICATIONS FOR MORE INFORMATION ON SPECIFIED BRICK

PHENOLIC WALL PANEL SIDING, REFER TO SPECIFICATIONS FOR MORE INFORMATION

CLIENT AND PROJECT

NORTH CAROLINA DEPARTMENT OF TRANSPORTATION

SCO ID NO.: 14-11006-01A

NEW DIVISION 8 OFFICE BUILDING

150 DOT DRIVE
CARTHAGE, NC 28327

DESIGNER

ANDRE JOHNSON ARCHITECT
PO BOX 14637
RALEIGH, NORTH CAROLINA 27620
TELEPHONE: 919.661.6935
MAIL: info@andrejohnsonarchitect.com

© 2016 Andre Johnson Architect, PLLC
Duplication or reproduction by any means without the express written consent of Andre L. Johnson, Architect is a violation of Federal and international law. The information contained on this document is the intellectual property of Andre L. Johnson, Architect and all rights thereto are Reserved. For exceptions, refer to the Owner-Architect Agreement.

CONSULTANT

REGISTRATION

ANDRE JOHNSON ARCHITECT PLLC
CORPORATE ARCHITECTURAL CERTIFICATE
52876
NORTH CAROLINA
RALEIGH, NC

ANDRE LAMAR JOHNSON
10528
NORTH CAROLINA
RALEIGH, NC
08/05/16

ISSUE

No.	Date	Description

SHEET INFO

BUILDING ELEVATIONS

A200

PROJECT NO: P1423.00
DATE: AUGUST 5, 2016
BID DOCUMENTS

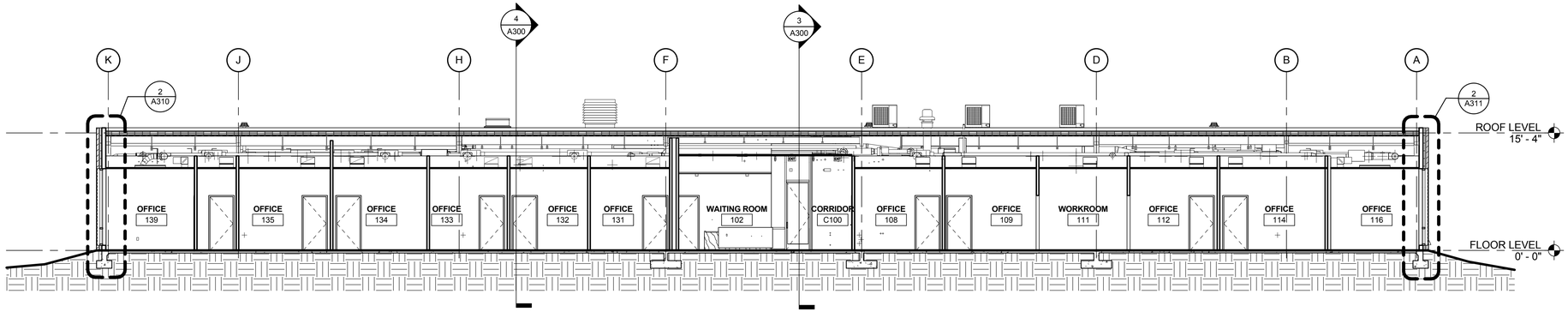

1 BUILDING SECTION 2

1/8" = 1'-0"

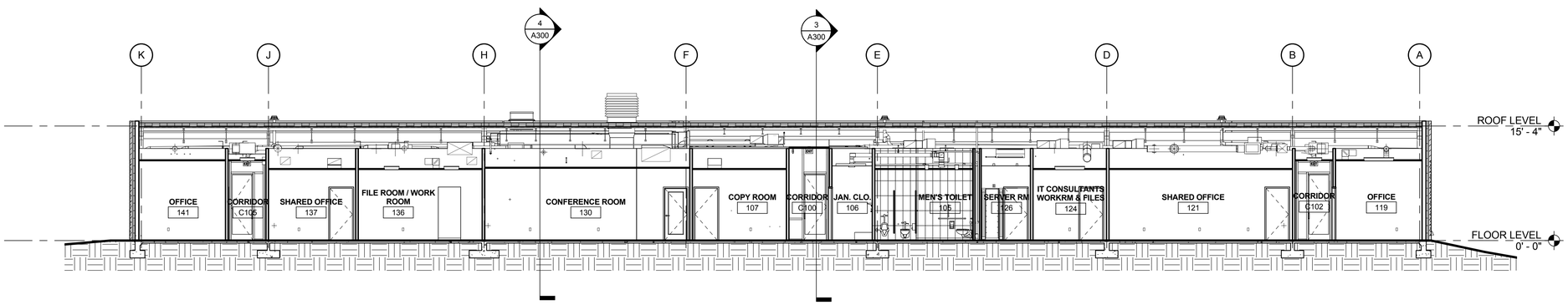

2 BUILDING SECTION 1

1/8" = 1'-0"

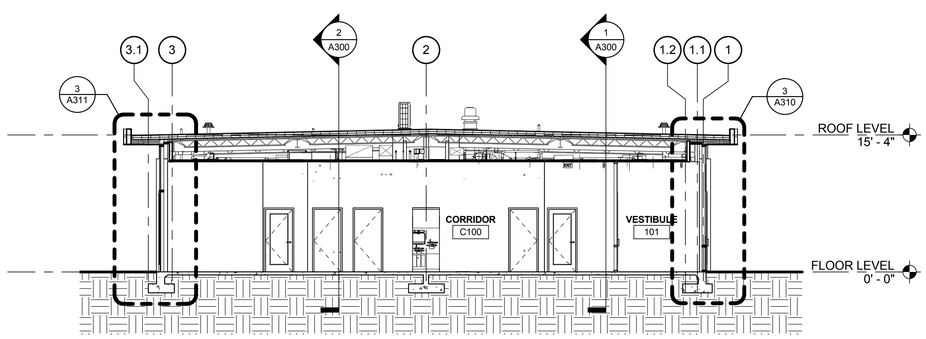

3 BUILDING SECTION 3

1/8" = 1'-0"

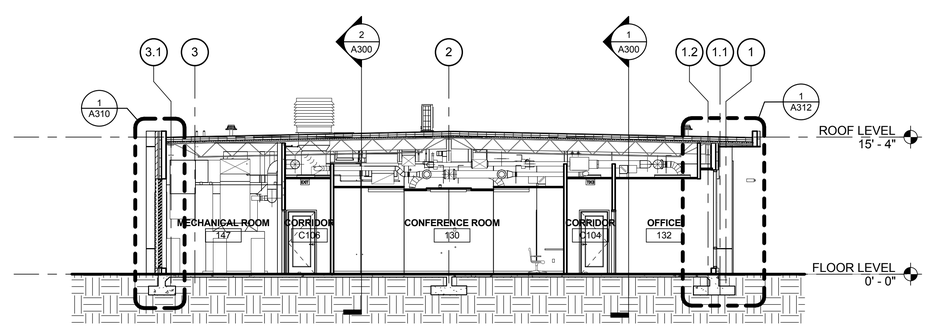

4 BUILDING SECTION 4

1/8" = 1'-0"

GENERAL NOTES

A. THE GENERAL CONTRACTOR SHALL FIELD VERIFY ALL DIMENSIONS & REPORT ANY DISCREPANCIES TO THE ARCHITECT.
B. THE GENERAL CONTRACTOR SHALL CONFIRM & COORDINATE ALL CIVIL, STRUCTURAL, MECHANICAL, ELECTRICAL, & PLUMBING ITEMS.
C. REFER TO STRUCTURAL FOR STRUCTURAL GRIDIMENSIONS.
D. STRUCTURAL COMPONENTS ARE INDICATED FOR REFERENCE. GENERAL CONTRACTOR SHALL REFER TO STRUCTURAL DRAWINGS FOR MORE INFORMATION.
E. TOP OF SLAB ELEVATION IS 0'-0". REFER TO CIVIL DWGS FOR ALL SPOT ELEVATIONS.
F. THE BOTTOM OF STEEL INDICATED IS MEASURED VERTICALLY FROM SLAB ELEVATION TO STEEL BEARING POINT.
G. LOCATION OF INDICATED MEP ITEMS SHALL BE COORDINATED WITH MEP, 2012 NC BUILDING CODE AND LOCAL AHJ. THE CODE AND LOCAL AHJ WILL GOVERN FOR DIMENSIONS OF ITEMS UNLESS DIMENSION IS GIVEN

CLIENT AND PROJECT

NORTH CAROLINA DEPARTMENT OF TRANSPORTATION

SCO ID NO.: 14-11006-01A

NEW DIVISION 8 OFFICE BUILDING

150 DOT DRIVE
CARTHAGE, NC 28327

DESIGNER

ANDRE JOHNSON ARCHITECT

PO BOX 14637
RALEIGH, NORTH CAROLINA 27620
TELEPHONE: 919.661.6935
MAIL: info@andrejohnsonarchitect.com

© 2016 Andre Johnson Architect, PLLC
Duplication or reproduction by any means without the express written consent of Andre L. Johnson, Architect is a violation of Federal and international law. The information contained on this document is the intellectual property of Andre L. Johnson, Architect and all rights thereto are Reserved. For exceptions, refer to the Owner-Architect Agreement.

CONSULTANT

REGISTRATION

ANDRE JOHNSON ARCHITECT PLLC
REGISTERED ARCHITECTURAL CORPORATION
52876
NORTH CAROLINA
RALEIGH, NC

ANDRE LAMAR JOHNSON
REGISTERED ARCHITECT
10528
NORTH CAROLINA
RALEIGH, NC
08/05/16

ISSUE

No.	Date	Description

SHEET INFO

BUILDING SECTIONS

A300

PROJECT NO: P1423.00
DATE: AUGUST 5, 2016
BID DOCUMENTS

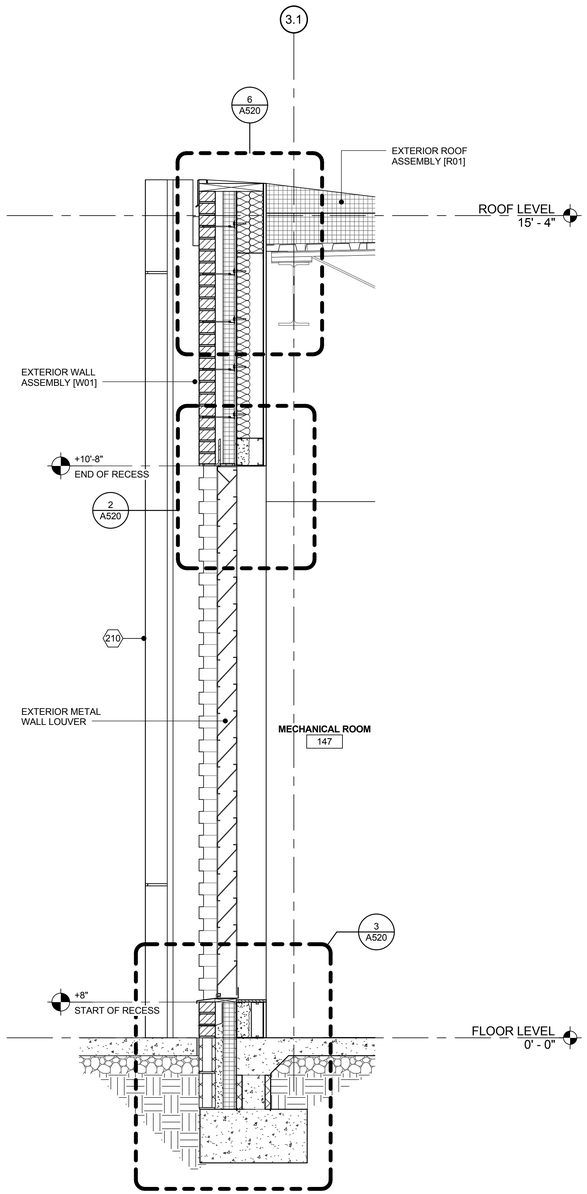

1 WALL SECTION @ LOUVER
3/4" = 1'-0"

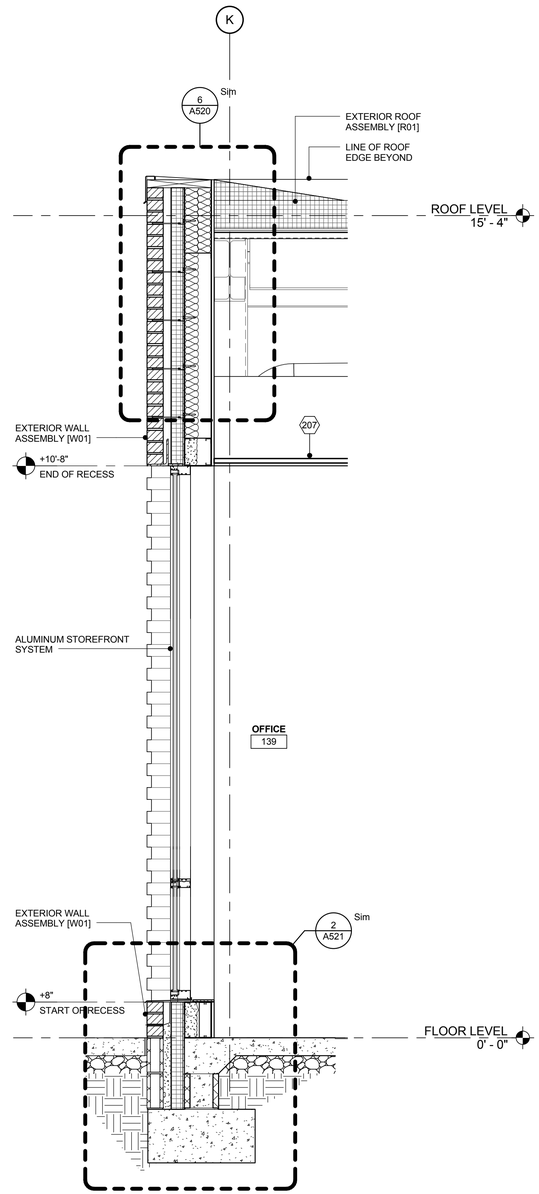

2 TYPICAL WALL SECTION @ PUNCHED WINDOW
3/4" = 1'-0"

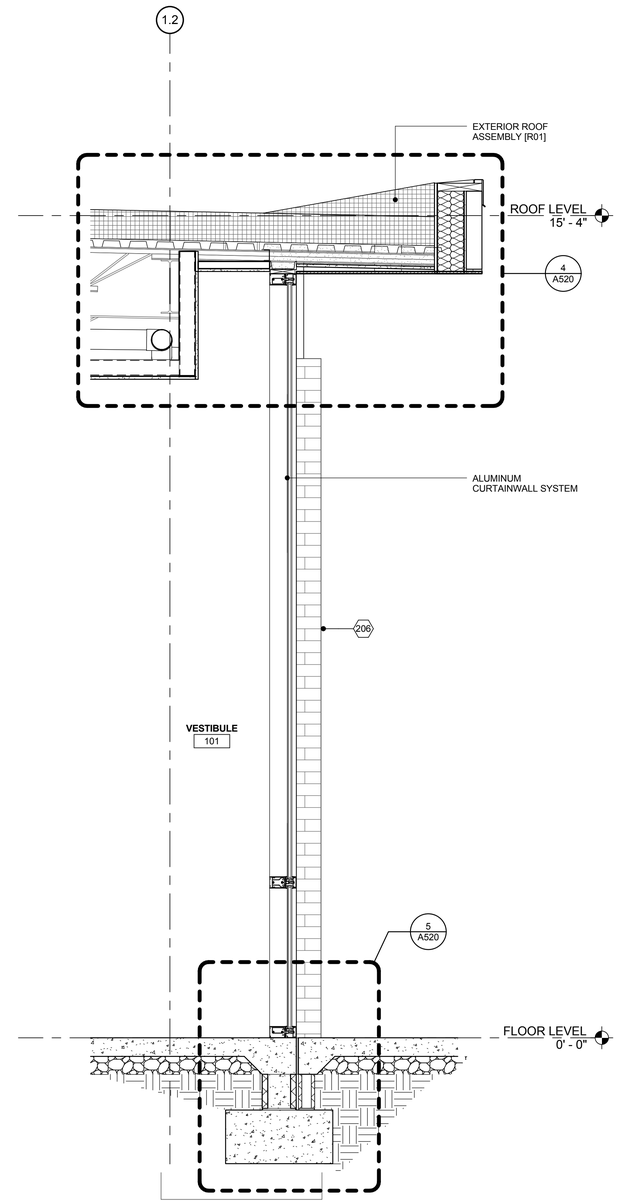

3 WALL SECTION @ NORTH ENTRY
3/4" = 1'-0"

GENERAL NOTES

A. ALL DIMENSIONS ARE TO FACE OF WOOD STUD UNLES NOTED OTHERWISE.
B. THE GENERAL CONTRACTOR SHALL CONFIRM AND COORDINATE ALL CIVIL, STRUCTURAL, MECHANICAL, ELECTRICAL & PLUMBING ITEMS WITH ARCHITECTURAL ITEMS INDICATED.
C. THE GENERAL CONTRACTOR SHALL FIELD VERIFY ALL DIMENSIONS & REPORT ANY DISCREPANCIES TO THE ARCHITECT.
D. REFER TO STRCUCTURAL DRAWINGS FOR EXACT STRUCTURAL GRID DIMENSIONS.
E. ALL STUD PARTITIONS SHALL RUN TO UNDERSIDE OF METAL ROOF DECK, U.N.O.
F. THE BOTTOM OR TOP OF STEEL IS MEASURED VERTICALLY FROM THE SLAB ELEVATION TO THE STEEL INDICATED.
G. REFER TO SPECIFICATIONS FOR ADDITIONAL PRODUCT INFORMATION.

SHEET KEYNOTES

206 LINE OF EXTERIOR WALL BEYOND
207 LINE OF INTERIOR CEILING; SEE RCP FOR HEIGHTS
210 METAL WALL PANEL BEYOND

CLIENT AND PROJECT

NORTH CAROLINA DEPARTMENT OF TRANSPORTATION

SCO ID NO.: 14-11006-01A

NEW DIVISION 8 OFFICE BUILDING

150 DOT DRIVE
CARTHAGE, NC 28327

DESIGNER

ANDRE JOHNSON ARCHITECT

PO BOX 14637
RALEIGH, NORTH CAROLINA 27620
TELEPHONE: 919.661.6935
MAIL: info@andrejohnsonarchitect.com

© 2016 Andre Johnson Architect, PLLC
Duplication or reproduction by any means without the express written consent of Andre L. Johnson, Architect is a violation of Federal and international law. The information contained on this document is the intellectual property of Andre L. Johnson, Architect and all rights thereto are Reserved. For exceptions, refer to the Owner-Architect Agreement.

CONSULTANT

REGISTRATION

ANDRE JOHNSON ARCHITECT PLLC
52876
NORTH CAROLINA
RALEIGH, NC

ANDRE LAMAR JOHNSON
10528
NORTH CAROLINA
RALEIGH, NC
08/05/16

ISSUE

No.	Date	Description

SHEET INFO

WALL SECTIONS

A310

PROJECT NO: P1423.00
DATE: AUGUST 5, 2016
BID DOCUMENTS

GENERAL NOTES

A. ALL DIMENSIONS ARE TO FACE OF WOOD STUD UNLES NOTED OTHERWISE.
B. THE GENERAL CONTRACTOR SHALL CONFIRM AND COORDINATE ALL CIVIL, STRUCTURAL, MECHANICAL, ELECTRICAL & PLUMBING ITEMS WITH ARCHITECTURAL ITEMS INDICATED.
C. THE GENERAL CONTRACTOR SHALL FIELD VERIFY ALL DIMENSIONS & REPORT ANY DISCREPANCIES TO THE ARCHITECT.
D. REFER TO STRCUCTURAL DRAWINGS FOR EXACT STRUCTURAL GRID DIMENSIONS.
E. ALL STUD PARTITIONS SHALL RUN TO UNDERSIDE OF METAL ROOF DECK, U.N.O.
F. THE BOTTOM OR TOP OF STEEL IS MEASURED VERTICALLY FROM THE SLAB ELEVATION TO THE STEEL INDICATED.
G. REFER TO SPECIFICATIONS FOR ADDITIONAL PRODUCT INFORMATION.

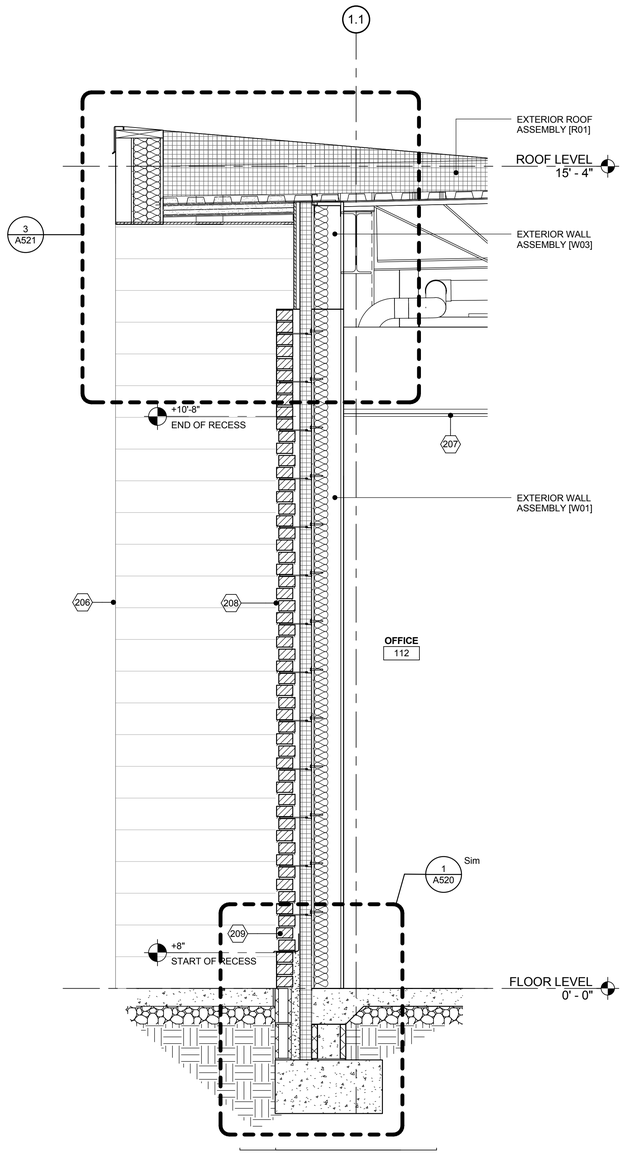

1 SECTION THRU WALL WITH BRICK / PHENOLIC PANEL
3/4" = 1'-0"

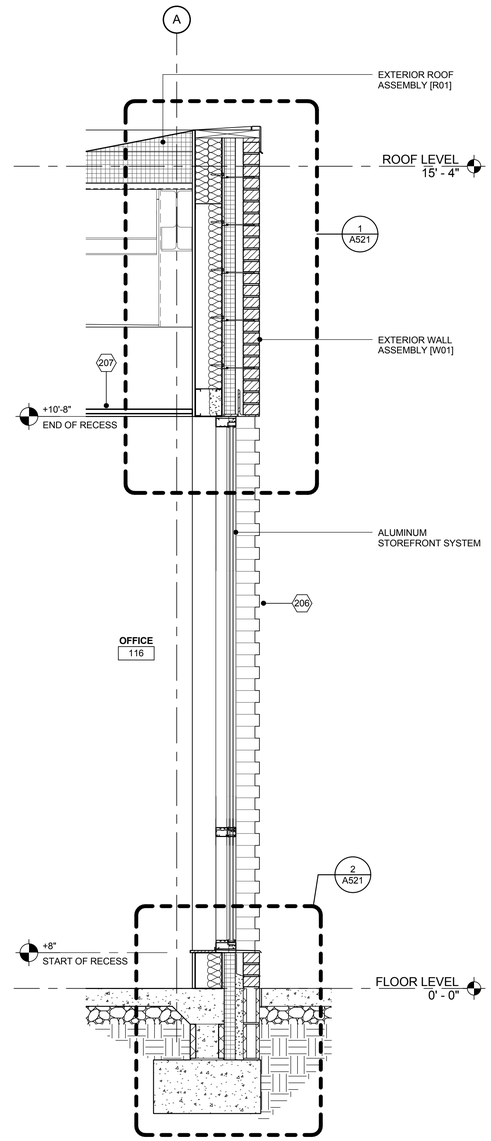

2 WALL SECTION @ PUNCHED OPENING
3/4" = 1'-0"

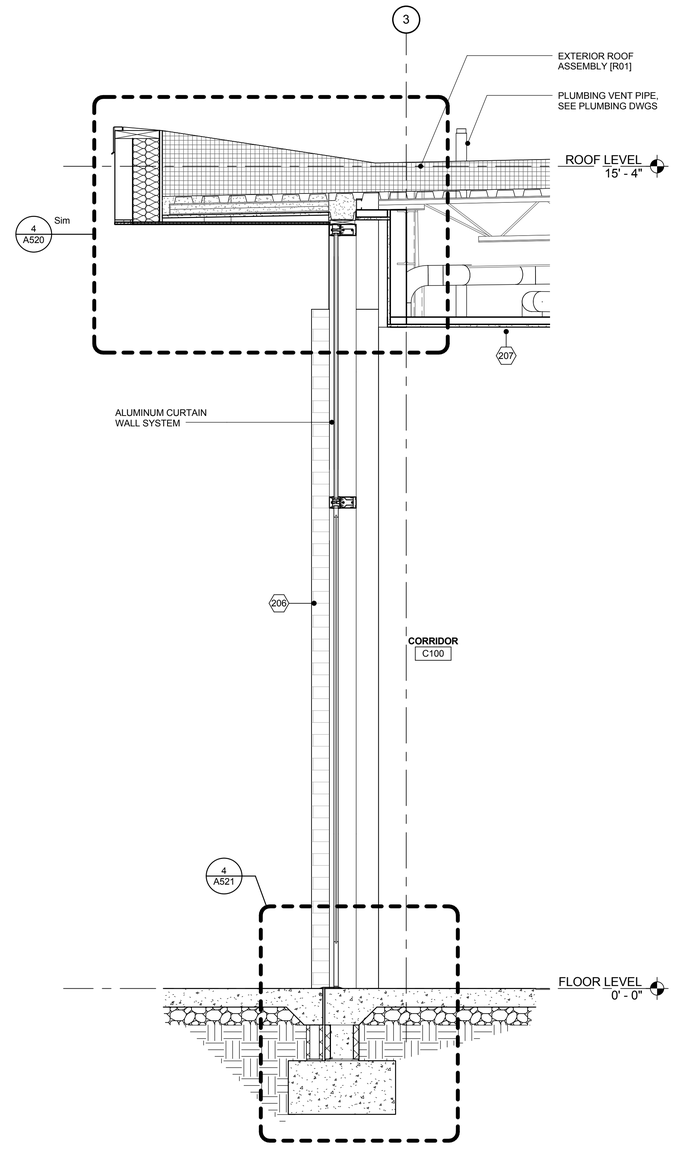

3 WALL SECTION @ SOUTH ENTRY
3/4" = 1'-0"

SHEET KEYNOTES

206 LINE OF EXTERIOR WALL BEYOND
207 LINE OF INTERIOR CEILING; SEE RCP FOR HEIGHTS
208 RECESS ALTERNATE COURSE OF BRICK 1/2" FOR THIS AREA; REFER TO ELEVATIONS FOR MORE INFORMATION
209 RECESS EVERY OTHER COURSE OF BRICK 1/2" AFTER FIRST 3 COURSES; MAKE SURE THAT RECESS ALIGNS WITH WINDOW OPENING

CLIENT AND PROJECT

NORTH CAROLINA DEPARTMENT OF TRANSPORTATION

SCO ID NO.: 14-11006-01A

NEW DIVISION 8 OFFICE BUILDING

150 DOT DRIVE
CARTHAGE, NC 28327

DESIGNER

ANDRE JOHNSON ARCHITECT

PO BOX 14637
RALEIGH, NORTH CAROLINA 27620
TELEPHONE: 919.661.6935
MAIL: info@andrejohnsonarchitect.com

© 2016 Andre Johnson Architect, PLLC
Duplication or reproduction by any means without the express written consent of Andre L. Johnson, Architect is a violation of Federal and international law. The information contained on this document is the intellectual property of Andre L. Johnson, Architect and all rights thereto are Reserved. For exceptions, refer to the Owner-Architect Agreement.

CONSULTANT

REGISTRATION

ANDRE JOHNSON ARCHITECT, PLLC
NORTH CAROLINA ARCHITECTURAL CORPORATION
52876
NORTH CAROLINA
RALEIGH, NC

ANDRE LAMAR JOHNSON
NORTH CAROLINA REGISTERED ARCHITECT
10528
NORTH CAROLINA
RALEIGH, NC
08/05/16

ISSUE

No.	Date	Description

SHEET INFO

WALL SECTIONS

A311

PROJECT NO: P1423.00
DATE: AUGUST 5, 2016
BID DOCUMENTS

GENERAL NOTES

A. ALL DIMENSIONS ARE TO FACE OF WOOD STUD UNLES NOTED OTHERWISE.
B. THE GENERAL CONTRACTOR SHALL CONFIRM AND COORDINATE ALL CIVIL, STRUCTURAL, MECHANICAL, ELECTRICAL & PLUMBING ITEMS WITH ARCHITECTURAL ITEMS INDICATED.
C. THE GENERAL CONTRACTOR SHALL FIELD VERIFY ALL DIMENSIONS & REPORT ANY DISCREPANCIES TO THE ARCHITECT.
D. REFER TO STRCUCTURAL DRAWINGS FOR EXACT STRUCTURAL GRID DIMENSIONS.
E. ALL STUD PARTITIONS SHALL RUN TO UNDERSIDE OF METAL ROOF DECK, U.N.O.
F. THE BOTTOM OR TOP OF STEEL IS MEASURED VERTICALLY FROM THE SLAB ELEVATION TO THE STEEL INDICATED.
G. REFER TO SPECIFICATIONS FOR ADDITIONAL PRODUCT INFORMATION.

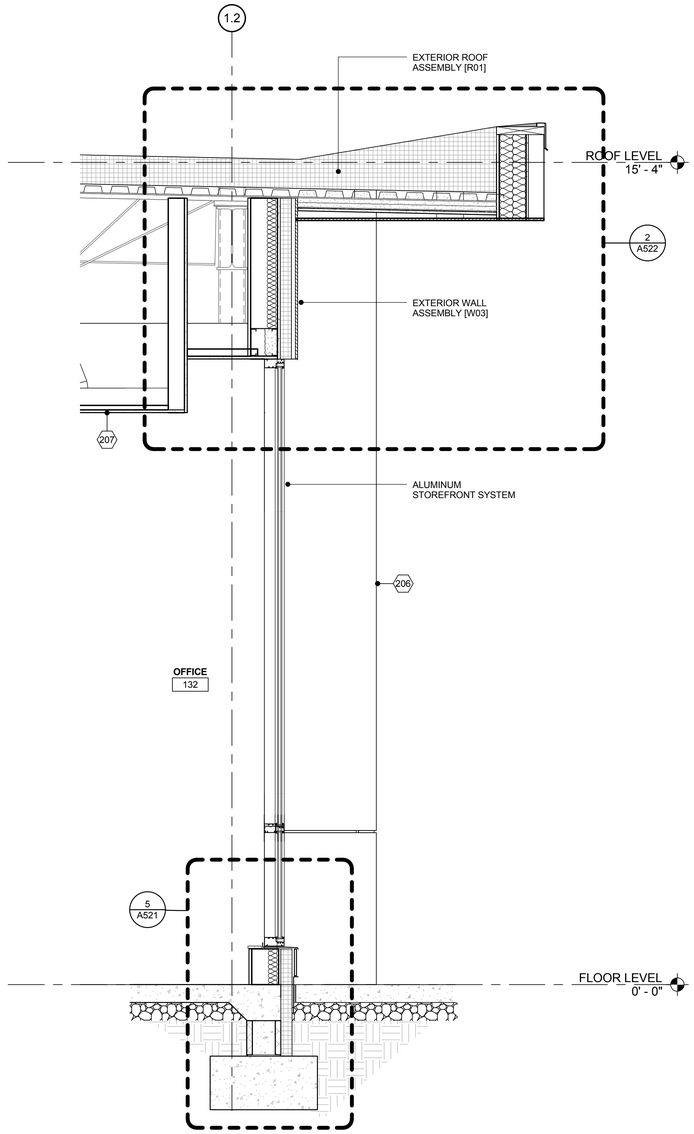

1 WALL SECTION @ PHENOLIC PANEL / STOREFRONT
3/4" = 1'-0"

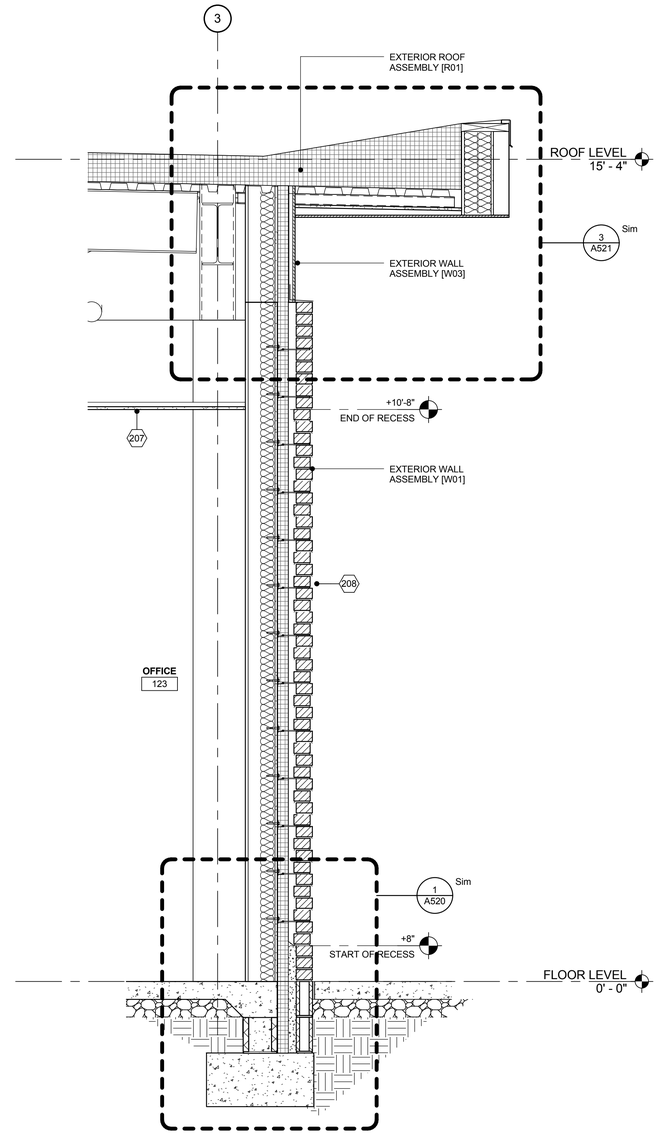

2 TYPICAL WALL SECTION / RECESS BRICK
3/4" = 1'-0"

SHEET KEYNOTES

206 LINE OF EXTERIOR WALL BEYOND
207 LINE OF INTERIOR CEILING; SEE RCP FOR HEIGHTS
208 RECESS ALTERNATE COURSE OF BRICK 1/2" FOR THIS AREA; REFER TO ELEVATIONS FOR MORE INFORMATION
209 RECESS EVERY OTHER COURSE OF BRICK 1/2" AFTER FIRST 3 COURSES; MAKE SURE THAT RECESS ALIGNS WITH WINDOW OPENING

CLIENT AND PROJECT

NORTH CAROLINA DEPARTMENT OF TRANSPORTATION

SCO ID NO.: 14-11006-01A

NEW DIVISION 8 OFFICE BUILDING

150 DOT DRIVE
CARTHAGE, NC 28327

DESIGNER

ANDRE JOHNSON ARCHITECT

PO BOX 14637
RALEIGH, NORTH CAROLINA 27620
TELEPHONE: 919.661.6935
MAIL: info@andrejohnsonarchitect.com

© 2016 Andre Johnson Architect, PLLC
Duplication or reproduction by any means without the express written consent of Andre L. Johnson, Architect is a violation of Federal and international law. The information contained on this document is the intellectual property of Andre L. Johnson, Architect and all rights thereto are Reserved. For exceptions, refer to the Owner-Architect Agreement.

CONSULTANT

REGISTRATION

ANDRE JOHNSON ARCHITECT PLLC
REGISTERED ARCHITECTURAL CORPORATION
52876
NORTH CAROLINA
RALEIGH, NC

ANDRE LAMAR JOHNSON
REGISTERED ARCHITECT
10528
NORTH CAROLINA
RALEIGH, NC
08/05/16

ISSUE

No.	Date	Description

SHEET INFO

WALL SECTIONS

A312

PROJECT NO: P1423.00
DATE: AUGUST 5, 2016
BID DOCUMENTS

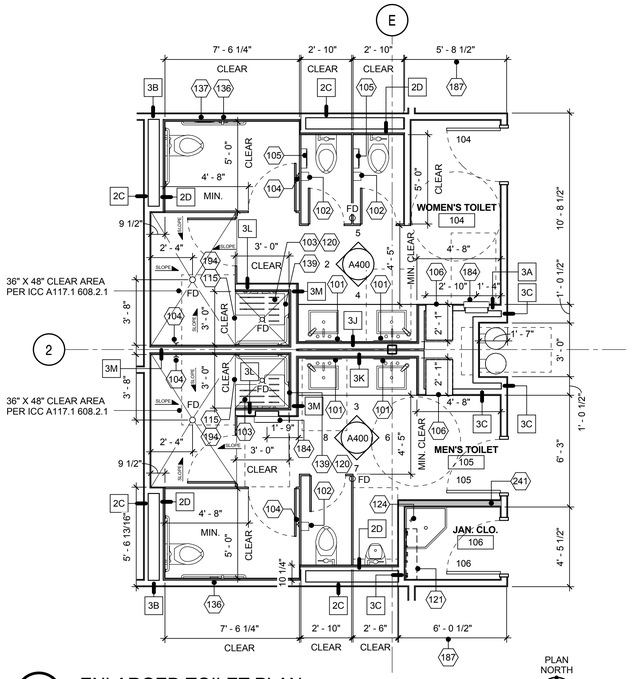

1 ENLARGED TOILET PLAN
1/4" = 1'-0"

ALL TOILET PARTITION DOORS SHALL HAVE COAT / ROBE HOOKS ON THE BACK OF THE DOOR

0' 2' 4' 8' 16'

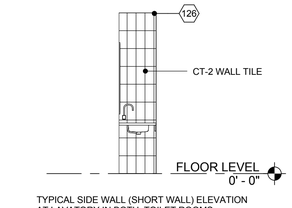

TYPICAL SIDE WALL (SHORT WALL) ELEVATION AT LAVATORY IN BOTH TOILET ROOMS

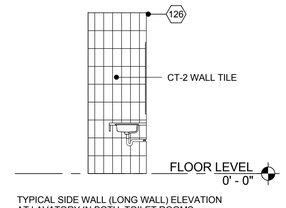

TYPICAL SIDE WALL (LONG WALL) ELEVATION AT LAVATORY IN BOTH TOILET ROOMS

6 INTERIOR ELEVATION @ SINKS
1/4" = 1'-0"

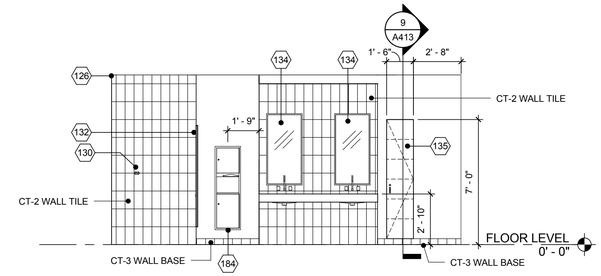

3 INTERIOR ELEVATION@ ROOM 105 SINKS
1/4" = 1'-0"

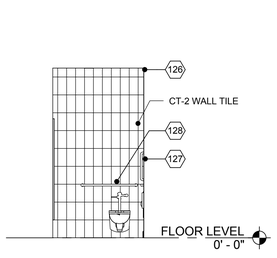

2 ELEVATION RM 104 @ ADA STALL
1/4" = 1'-0"

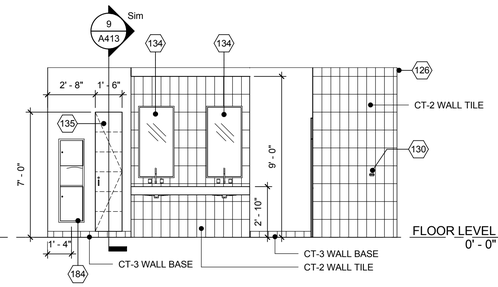

4 ELEVATION@RM 104 SINKS
1/4" = 1'-0"

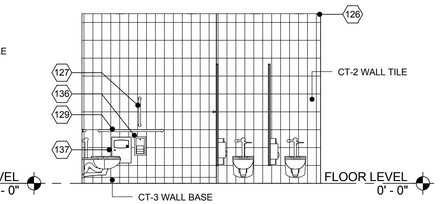

5 ELEVATION@ RM 104 TLT STALLS
1/4" = 1'-0"

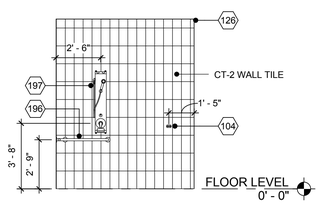

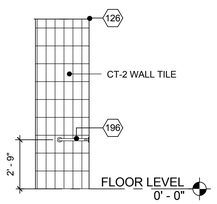

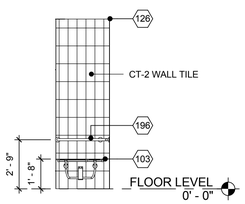

11 TYPICAL SHOWER ELEVATIONS
1/4" = 1'-0"

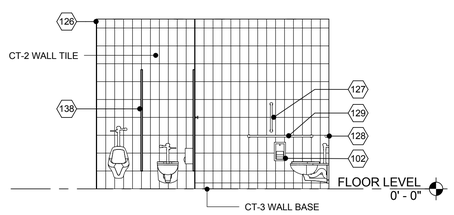

7 ELEVATION@ ROOM 105 TOILETS
1/4" = 1'-0"

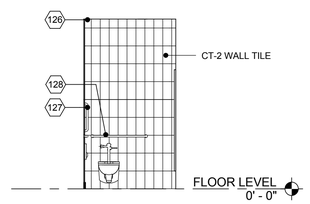

8 ELEVATION@ RM 105 ADA TLT
1/4" = 1'-0"

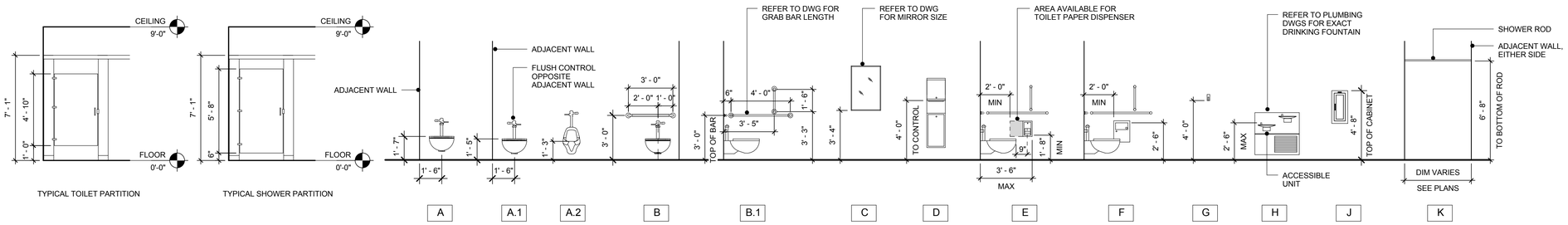

9 TOILET ACCESSORIES MOUNTING HEIGHTS
1/4" = 1'-0"

GENERAL NOTES

A. ALL DIMENSIONS ARE TO FACE OF GYPSUM WALLBOARD, UNLESS NOTED OTHERWISE.
B. THE GENERAL CONTRACTOR SHALL PROVIDE ALL BLOCKING REQUIRED TO ANCHOR WALL AND CEILING MOUNTED ITEMS, INCLUDING BUT NOT LIMITED TO TOILET ROOM ACCESSORIES, CASEWORK, HANDRAILS, DOOR STOPS, ETC.
C. REFER TO INTERIOR ELEVATION DRAWINGS FOR ADDITIONAL EQUIPMENT INFORMATION.
D. THE GENERAL CONTRACTOR SHALL CONFIRM AND COORDINATE ALL CIVIL, STRUCTURAL, MECHANICAL, ELECTRICAL, & PLUMBING ITEMS.
E. THE GENERAL CONTRACTOR SHALL FIELD VERIFY ALL DIMENSIONS & PROMPTLY REPORT ANY DISCREPANCIES TO THE ARCHITECT.
F. EQUIPMENT INDICATED WITH A DASHED LINE OR NOTEIAS "NIC" (NOT IN THE CONTRACT) IS NOT PART OF THE CONTRACT. WHERE INSTALLATION IS REQUIRED BY CONTRACT DOCUMENTS, INSTALLATION SHALL BE PART OF THE CONTRACTORS WORK AND SHALL BE COMPLETE.
G. IN ALL CASES BLOCKING REQUIRED FOR ITEMS NOT IN CONTRACT SHALL BE FURNISHED AND INSTALLED BY THE CONTRACTOR AND COORDINATED WITH THE OWNER.
H. REFER TO STRUCTURAL DRAWINGS FOR STRUCTURAL GRID DIMENSIONS.
I. REFER TO SHEET A-501 FOR WALL PARTITION TYPES.
J. ALL DOORS TO BE LOCATED 6" OFF FACE OF WALL U.N.O.
K. REFER TO SHEET A600 FOR DOOR SCHEDULE.
L. REFER TO SHEET A400 FOR TYPICAL MOUNTING HEIGHTS.
M. ALL WALL PARTITION TYPES ARE TYPE 3G U.N.O.
N. CONTRACTOR SHALL COORDINATE SIGNAGE INSTALLATION WITH OWNER.
O. REFER TO SHEETS A601 FOR EXTERIOR FRAME ELEVATIONS.
P. SPOT ELEVATIONS ARE REFERENCED FROM 0'-0" TOP OF SLAB. GENERAL CONTRACTOR SHALL COORDINATE WITH CIVIL DRAWINGS AND EXISTING FIELD CONDITIONS FOR TRUE SPOT ELEVATIONS.
Q. FOR TYPICAL MOUNTING HEIGHTS IDENTIFIED ON DETAIL A1/A400, CONFIRM WITH MANUFACTURER, 2012 NORTH CAROLINA BUILDING CODE AND THE ARCHITECT PRIOR TO INSTALLATION.
R. THE CONTRACTOR SHALL REFER TO SHEET A501 FOR TYPICAL WALL PARTITION TYPES INCLUDED IN THE SCOPE OF WORK.

SHEET KEYNOTES

101 MIRROR
102 SURFACE MOUNTED TOILET PAPER DISPENSER
103 FOLDING SHOWER SEAT
104 COAT / ROBE HOOK
105 SURFACE MOUNTED SANITARY NAPKINS DISPOSAL UNIT
106 WARDROBE CABINET
115 COLLAPSABLE ADA SHOWER DAM
120 SLOPE FROM EDGES TO CENTER DRAIN AT 1/4" PER FOOT
121 STAINLESS STEEL SHELVING, REFER TO SPECIFICATIONS
124 MOP SINK, REFER TO PLUMBING DRAWINGS FOR MORE INFORMATION
126 WALL TILE EXTENDS TO 6" ABOVE CEILING
127 VERTICAL GRAB BAR
128 36" HORIZONTAL GRAB BAR
129 42" HORIZONTAL GRAB BAR
130 ROBE / COAT HOOK
132 SHOWER PARTITION
134 CENTER MIRROR ABOUT THE CENTERLINE OF THE SINK
135 BUILT IN LOCKABLE WARDROBE CABINET WITH PL-1 FINISH
136 RECESSED TOILET PAPER DISPENSER
137 RECESSED SANITARY NAPKINS DISPOSAL UNIT
138 TOILET PARTITION
139 SOAP DISH LOCATE NOT MORE THAN 44" ABOVE FINISHED FLOOR
184 SEMI RECESSED PAPER TOWEL DISPENSER
187 DIMENSION INDICATED TO FACE OF STUD NOT GYPSUM WALLBOARD.
194 SHOWER ROD AND CURTAIN ABOVE.
196 ADA SHOWER HORIZONTAL GRAB BAR.
197 ADA SHOWER CONTROLS, REFER TO PLUMBING DWGS FOR MORE INFORMATION.
241 FOR HATCHED AREA REFER TO DETAIL 2/A503 FOR MORE INFORMATION ON THE WALL CONSTRUCTION IN THIS AREA THAT IS UNDERNEATH LARGE MECHANICAL DUCTS SHOWN ON SHEET M101

FIXTURE AND ACCESSORY LEGEND

A NON-ACCESSIBLE WALL MOUNTED WATER CLOSET
A.1 ACCESSIBLE WALL MOUNTED WATER CLOSET
A.2 ACCESSIBLE URINAL
B 36" HORIZONTAL GRAB BAR
B.1 18" HORIZONTAL GRAB BAR
42" HORIZONTAL GRAB BAR
48" HORIZONTAL GRAB BAR
C WALL MOUNTED MIRROR
D SEMI-RECESSED PAPER TOWEL DISPENSER AND RECEPTACLE
E SURFACE MOUNTED TOILET PAPER DISPENSER
RECESSED MOUNTED TOILET PAPER DISPENSERH
F SURFACE MOUNTED SANITARY NAPKIN DISPOSAL
RECESSED MOUNTED SANITARY NAPKIN DISPOSAL
G ROBE / COAT HOOK
H "HI-LO" ACCESSIBLE AND NON-ACCESSIBLE DRINKING FOUNTAIN
J FIRE EXTINGUISHER CABINET AND FIRE EXTINGUISHER
K SHOWER ROD MOUNTING HEIGHT

WALL TYPE LEGEND

3A WALL TYPE SYMBOL - REFER TO SHEET A500-A502 FOR WALL TYPE CONSTRUCTION & RATINGS

NEW UNRATED STUD WALL

CLIENT AND PROJECT

NORTH CAROLINA DEPARTMENT OF TRANSPORTATION

SCO ID NO.: 14-11006-01A

NEW DIVISION 8 OFFICE BUILDING

150 DOT DRIVE
CARTHAGE, NC 28327

DESIGNER

ANDRE JOHNSON ARCHITECT
PO BOX 14637
RALEIGH, NORTH CAROLINA 27620
TELEPHONE: 919.661.6935
MAIL: info@andrejohnsonarchitect.com

© 2016 Andre Johnson Architect, PLLC
Duplication or reproduction by any means without the express written consent of Andre L. Johnson, Architect is a violation of Federal and international law. The information contained on this document is the intellectual property of Andre L. Johnson, Architect and all rights thereto are Reserved. For exceptions, refer to the Owner-Architect Agreement.

CONSULTANT

REGISTRATION

ANDRE JOHNSON ARCHITECT PLLC
CORPORATE ARCHITECTURAL CORPORATION
52876
NORTH CAROLINA
RALEIGH, N.C.

ANDRE LAMAR JOHNSON
REGISTERED ARCHITECT
10528
NORTH CAROLINA
RALEIGH, N.C.
08/05/16

ISSUE

No.	Date	Description

SHEET INFO

ENLARGED TOILET ROOM PLANS & ELEVATIONS

A400

PROJECT NO: P1423.00
DATE: AUGUST 5, 2016
BID DOCUMENTS

SHEET KEYNOTES

173	DIMENSION INDICATED IS FROM CENTERLINE OF COLUMN GRID
174	STUD WALL BELOW AND ABOVE ANGLE THAT IS FLUSH WITH ADJACENT WALL CONSTRUCTION
175	2" ALUMINUM GROMMETS
176	ADJACENT WALL, REFER TO FLOOR PLAN FOR PARTITION TYPE AND LOCATION
177	ALIGN EDGE OF RECEPTION DESK WITH FACE OF ADAJCENT WALL
198	PROVIDE BOX COLUMN SPACED AT 2'-6" O.C. WITH BOX HEADER BETWEEN BOX COLUMNS ALONG THIS WALL, TYP.

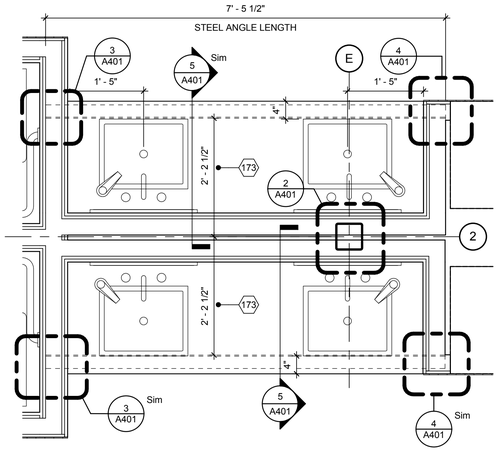

1 ENLARGED PLAN AT SINKS
3/4" = 1'-0"

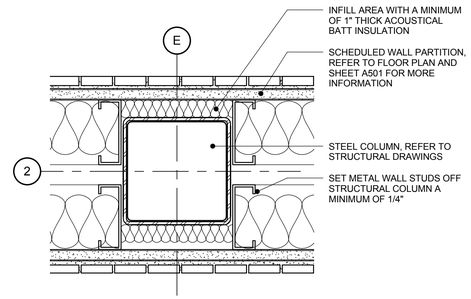

2 COLUMN AT TOILET ROOM SINKS
3" = 1'-0"

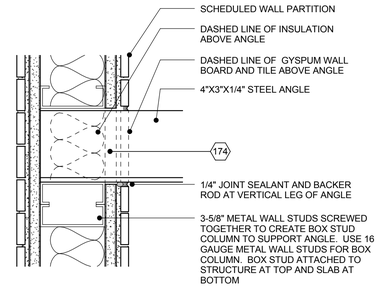

3 COUNTER SUPPORT DETAIL 1
3" = 1'-0"

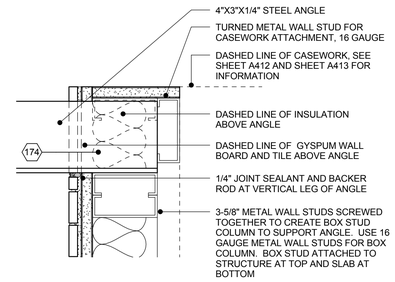

4 COUNTER SUPPORT DETAIL 2
3" = 1'-0"

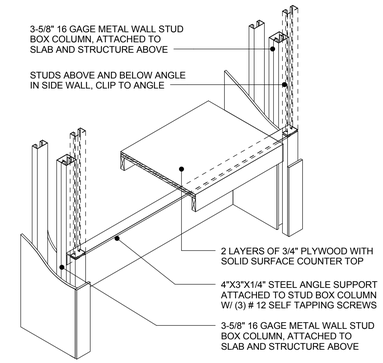

13 SINK ANGLE SUPPORT ISOMETRIC
1/2" = 1'-0"

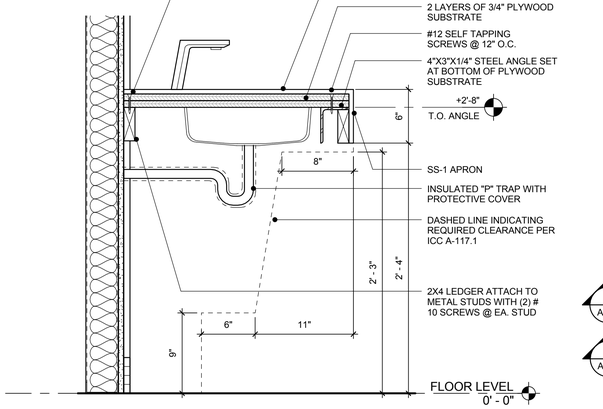

5 SINK COUNTER SUPPORT
1 1/2" = 1'-0"

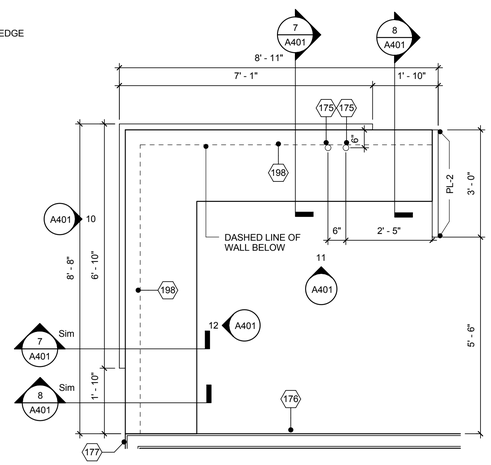

6 ENLARGED RECEPTION DESK PLAN
1/2" = 1'-0"

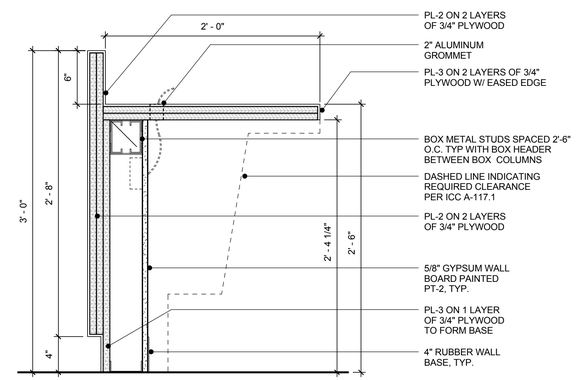

7 SECTION 1 @ RECEPTION DESK
1 1/2" = 1'-0"

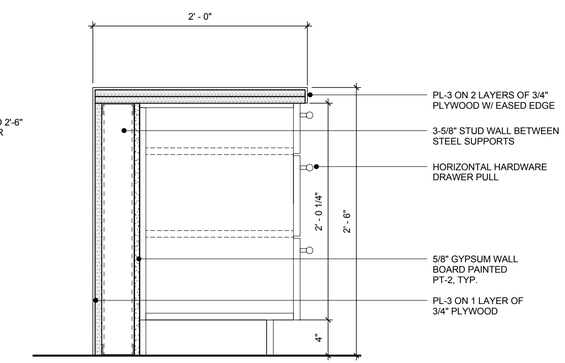

8 SECTION 2 @ RECEPTION DESK
1 1/2" = 1'-0"

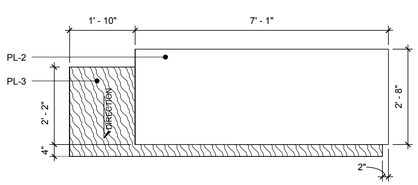

9 RECEPTION DESK - FRONT
1/2" = 1'-0"

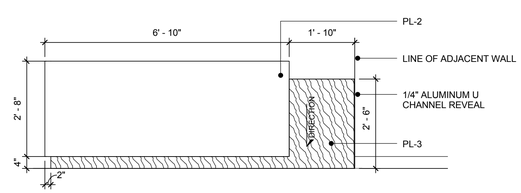

10 RECEPTION DESK-CORRIDOR
1/2" = 1'-0"

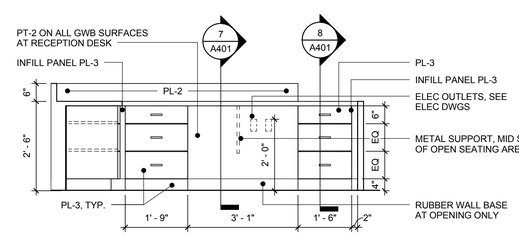

11 RECEPTION DESK - INTERIOR ELEVATION
1/2" = 1'-0"

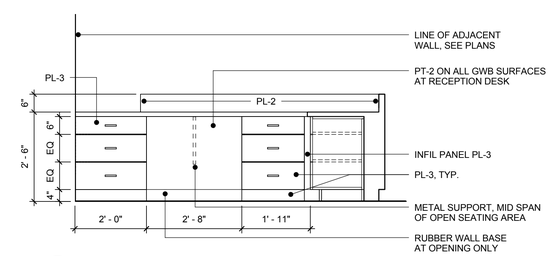

12 RECEPTION DESK - INTERIOR ELEVATION 2
1/2" = 1'-0"

CLIENT AND PROJECT

NORTH CAROLINA DEPARTMENT OF TRANSPORTATION

SCO ID NO.: 14-11006-01A

NEW DIVISION 8 OFFICE BUILDING

150 DOT DRIVE
CARTHAGE, NC 28327

DESIGNER

ANDRE JOHNSON ARCHITECT

PO BOX 14637
RALEIGH, NORTH CAROLINA 27620
TELEPHONE: 919.661.6935
MAIL: info@andrejohnsonarchitect.com

© 2016 Andre Johnson Architect, PLLC
Duplication or reproduction by any means without the express written consent of Andre L. Johnson, Architect is a violation of Federal and international law. The information contained on this document is the intellectual property of Andre L. Johnson, Architect and all rights thereto are Reserved. For exceptions, refer to the Owner-Architect Agreement.

CONSULTANT

REGISTRATION

ANDRE JOHNSON ARCHITECT, PLLC
CORPORATE ARCHITECTURAL CERTIFICATE OF AUTHORIZATION
52876
NORTH CAROLINA
RALEIGH, N.C.

ANDRE LAMAR JOHNSON
REGISTERED ARCHITECT
10528
NORTH CAROLINA
RALEIGH, N.C.
08/05/16

ISSUE

No.	Date	Description

SHEET INFO

TOILET ROOM SINK DETAILS & RECEPTION DESK DETAILS

A401

PROJECT NO: P1423.00
DATE: AUGUST 5, 2016
BID DOCUMENTS

SHEET KEYNOTES

230	REFER TO DETAIL 3 ON SHEET A600 FOR MORE INFORMAITON ON THE DOOR STRIKE SIDE DETAIL SHOWN

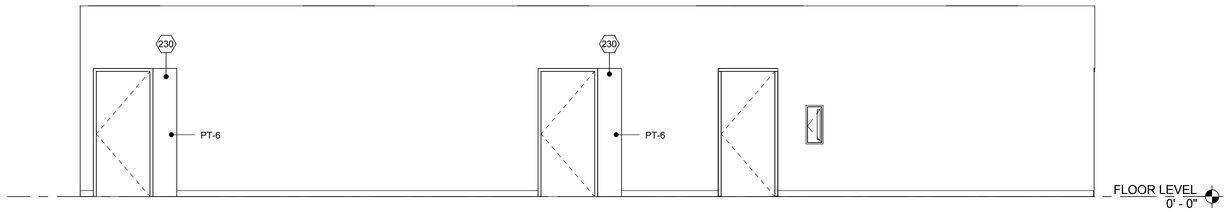

1 INTERIOR ELEVATION CORRIDOR C103 NORTH

1/4" = 1'-0"

ROOM PANEL SIGNAGE NOT SHOWN FOR CLARITY. FOR LOCATION OF INTERIOR PANEL SIGNS, REFER TO SHEET A700

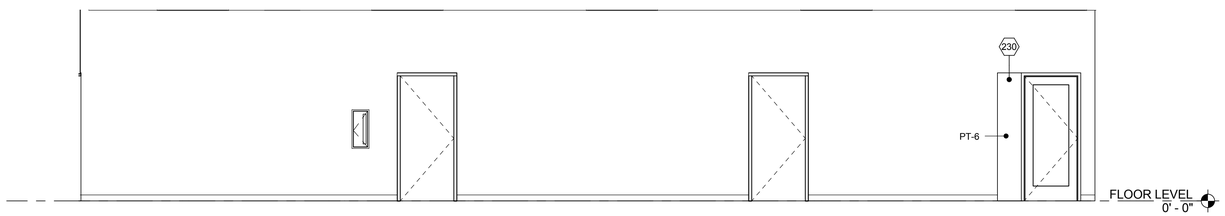

2 INTERIOR ELEVATION CORRIDOR C101 SOUTH

1/4" = 1'-0"

ROOM PANEL SIGNAGE NOT SHOWN FOR CLARITY. FOR LOCATION OF INTERIOR PANEL SIGNS, REFER TO SHEET A700

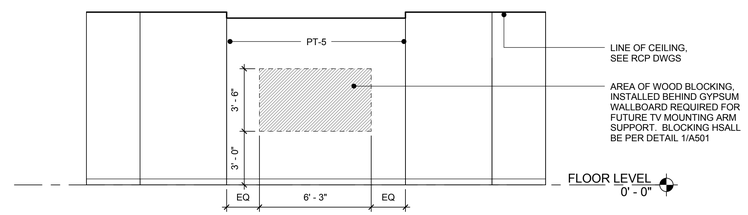

6 CONFERENCE ROOM ELEVATION - TV WALL

1/4" = 1'-0"

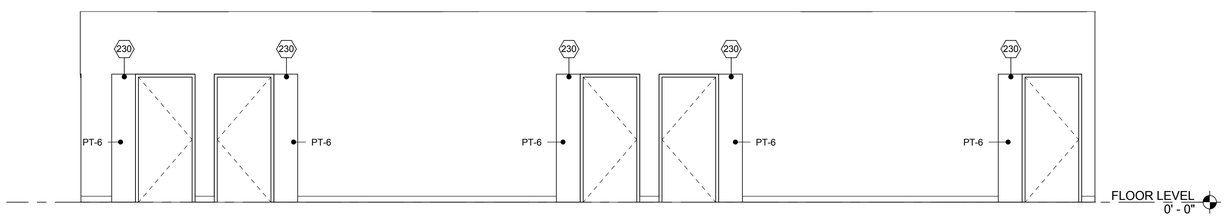

3 INTERIOR ELEVATION CORRIDOR C103

1/4" = 1'-0"

ROOM PANEL SIGNAGE NOT SHOWN FOR CLARITY. FOR LOCATION OF INTERIOR PANEL SIGNS, REFER TO SHEET A700

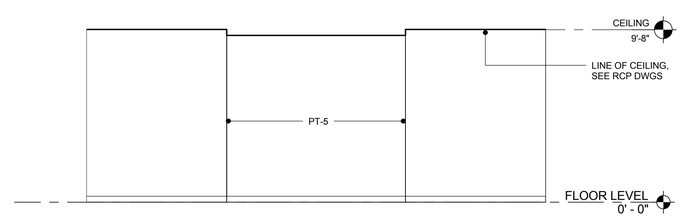

7 CONFERENCE ROOM ELEVATION

1/4" = 1'-0"

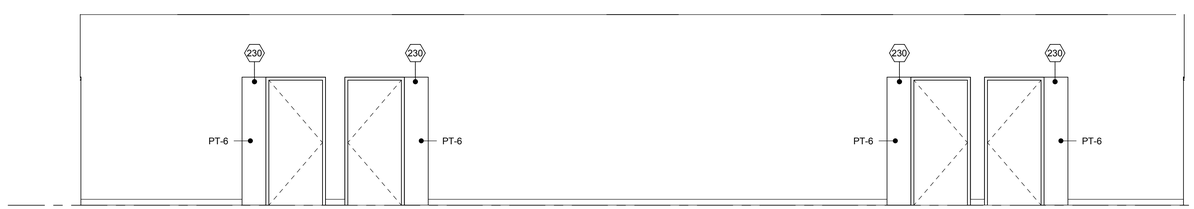

4 INTERIOR ELEVATION CORRIDOR C101

1/4" = 1'-0"

ROOM PANEL SIGNAGE NOT SHOWN FOR CLARITY. FOR LOCATION OF INTERIOR PANEL SIGNS, REFER TO SHEET A700

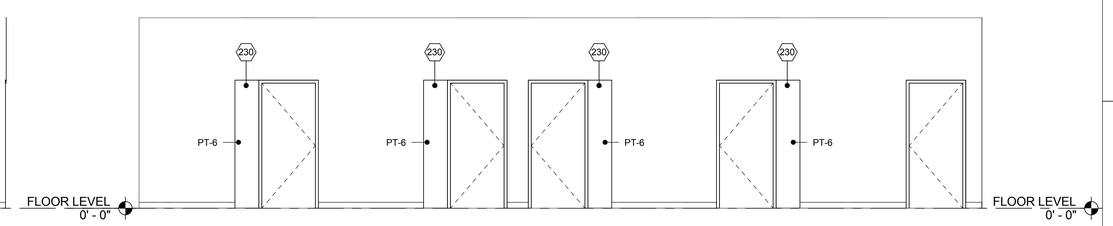

5 INTERIOR ELEVATION CORRIDOR C102

1/4" = 1'-0"

ROOM PANEL SIGNAGE NOT SHOWN FOR CLARITY. FOR LOCATION OF INTERIOR PANEL SIGNS, REFER TO SHEET A700

CLIENT AND PROJECT

NORTH CAROLINA DEPARTMENT OF TRANSPORTATION

SCO ID NO.: 14-11006-01A

NEW DIVISION 8 OFFICE BUILDING

150 DOT DRIVE
CARTHAGE, NC 28327

DESIGNER

ANDRE JOHNSON ARCHITECT

PO BOX 14637
RALEIGH, NORTH CAROLINA 27620
TELEPHONE: 919.661.6935
MAIL: info@andrejohnsonarchitect.com

© 2016 Andre Johnson Architect, PLLC
Duplication or reproduction by any means without the express written consent of Andre L. Johnson, Architect is a violation of Federal and international law. The information contained on this document is the intellectual property of Andre L. Johnson, Architect and all rights thereto are Reserved. For exceptions, refer to the Owner-Architect Agreement.

CONSULTANT

REGISTRATION

ANDRE JOHNSON ARCHITECT PLLC
CORPORATE ARCHITECTURAL CERTIFICATE
52876
NORTH CAROLINA
RALEIGH, NC

ANDRE LAMAR JOHNSON
10528
NORTH CAROLINA
RALEIGH, NC
08/05/16

ISSUE

No.	Date	Description

SHEET INFO

INTERIOR ELEVATIONS

A410

PROJECT NO: P1423.00
DATE: AUGUST 5, 2016
BID DOCUMENTS

SHEET KEYNOTES

230 REFER TO DETAIL 3 ON SHEET A600 FOR MORE INFORMAITON ON THE DOOR STRIKE SIDE DETAIL SHOWN

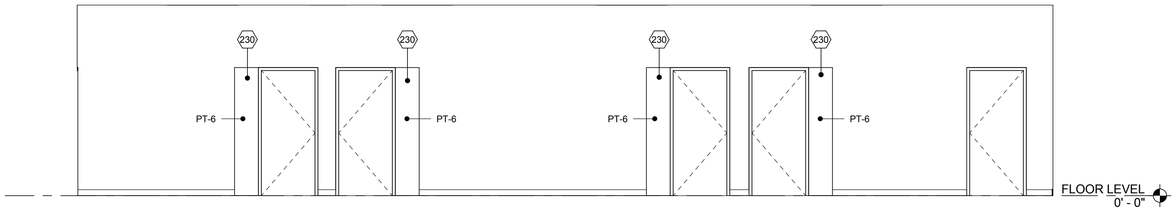

1 INTERIOR ELEVATION CORRIDOR C104

1/4" = 1'-0"

ROOM PANEL SIGNAGE NOT SHOWN FOR CLARITY. FOR LOCATION OF INTERIOR PANEL SIGNS, REFER TO SHEET A700

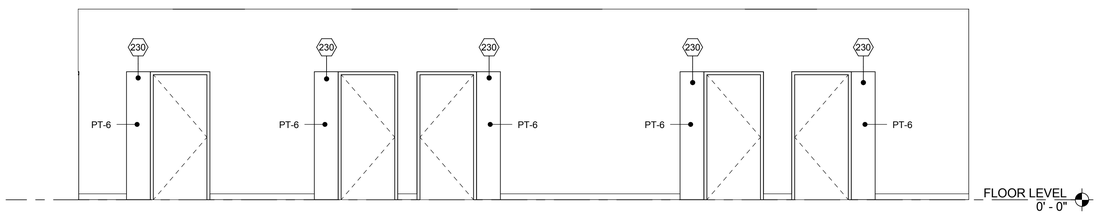

2 INTERIOR ELEVATION CORRIDOR C105

1/4" = 1'-0"

ROOM PANEL SIGNAGE NOT SHOWN FOR CLARITY. FOR LOCATION OF INTERIOR PANEL SIGNS, REFER TO SHEET A700

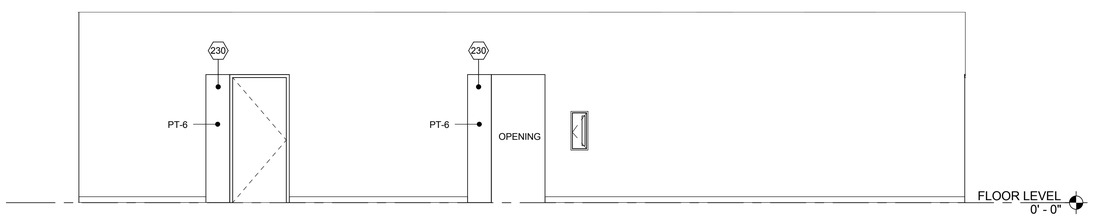

3 INTERIOR ELEVATION CORRIDOR C104 SOUTH

1/4" = 1'-0"

ROOM PANEL SIGNAGE NOT SHOWN FOR CLARITY. FOR LOCATION OF INTERIOR PANEL SIGNS, REFER TO SHEET A700

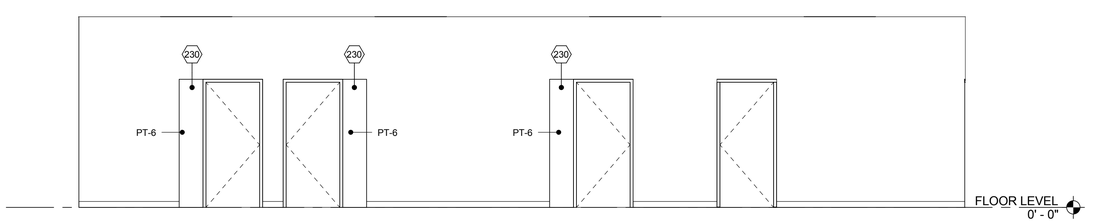

4 INTERIOR ELEVATION CORRIDOR C106

1/4" = 1'-0"

ROOM PANEL SIGNAGE NOT SHOWN FOR CLARITY. FOR LOCATION OF INTERIOR PANEL SIGNS, REFER TO SHEET A700

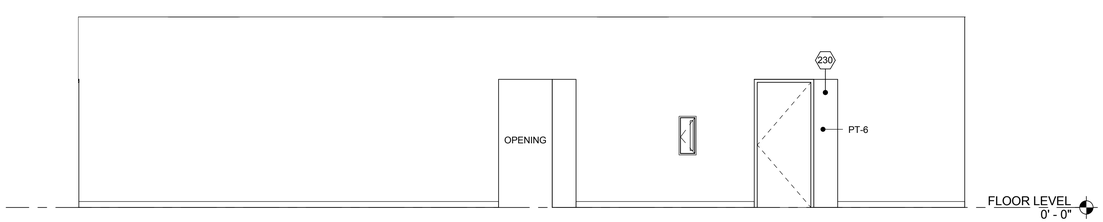

5 INTERIOR ELEVATION CORRIDOR C106 NORTH

1/4" = 1'-0"

ROOM PANEL SIGNAGE NOT SHOWN FOR CLARITY. FOR LOCATION OF INTERIOR PANEL SIGNS, REFER TO SHEET A700

CLIENT AND PROJECT

NORTH CAROLINA DEPARTMENT OF TRANSPORTATION

SCO ID NO.: 14-11006-01A

NEW DIVISION 8 OFFICE BUILDING

150 DOT DRIVE
CARTHAGE, NC 28327

DESIGNER

ANDRE JOHNSON ARCHITECT

PO BOX 14637
RALEIGH, NORTH CAROLINA 27620
TELEPHONE: 919.661.6935
MAIL: info@andrejohnsonarchitect.com

© 2016 Andre Johnson Architect, PLLC
Duplication or reproduction by any means without the express written consent of Andre L. Johnson, Architect is a violation of Federal and international law. The information contained on this document is the intellectual property of Andre L. Johnson, Architect and all rights thereto are Reserved. For exceptions, refer to the Owner-Architect Agreement.

CONSULTANT

REGISTRATION

ANDRE JOHNSON ARCHITECT PLLC
52876
RALEIGH, NC

ANDRE LAMAR JOHNSON
10528
RALEIGH, NC
08/05/16

ISSUE

No.	Date	Description

SHEET INFO

INTERIOR ELEVATIONS

A411

PROJECT NO: P1423.00
DATE: AUGUST 5, 2016
BID DOCUMENTS

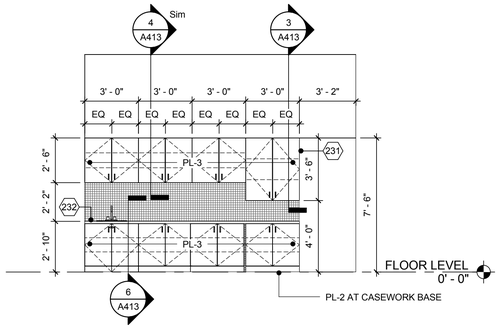

1 INTERIOR ELEVATION @ BREAKROOM

1/4" = 1'-0"

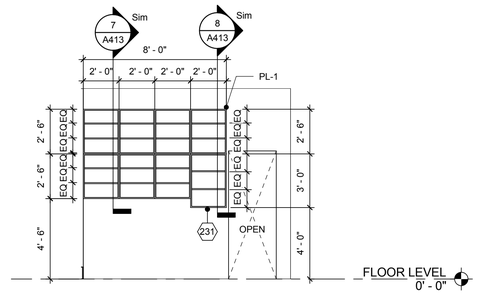

2 INTERIOR ELEVATION EAST WALL @ ROOM 111

1/4" = 1'-0"

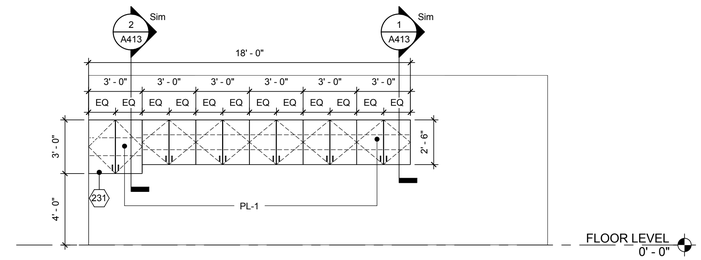

3 INTERIOR ELEVATION @ ROOM 136

1/4" = 1'-0"

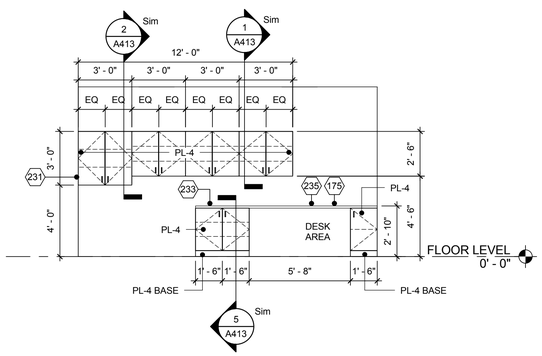

4 INTERIOR ELEVATION @ ROOM 107

1/4" = 1'-0"

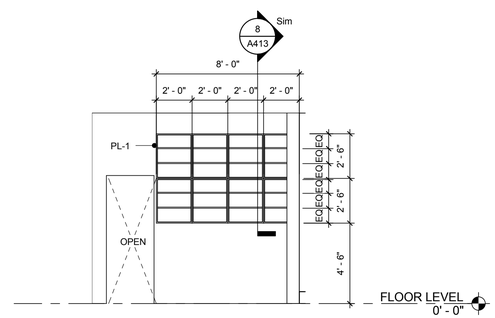

5 INTERIOR ELEVATION WEST WALL @ ROOM 111

1/4" = 1'-0"

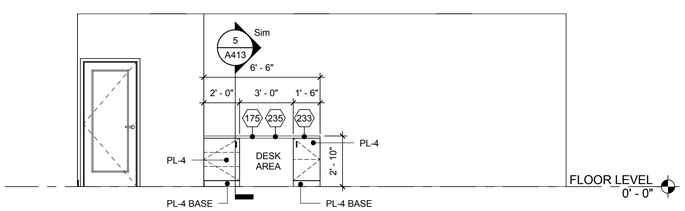

7 INTERIOR ELEVATION @ ROOM 130

1/4" = 1'-0"

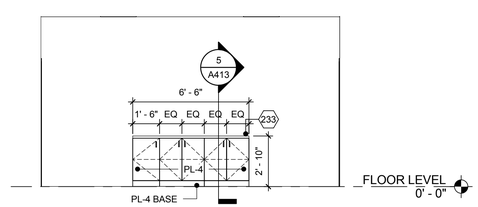

8 INTERIOR ELEVATION-2 @ ROOM 107

1/4" = 1'-0"

GENERAL NOTES

A. ALL DIMENSIONS ARE TO FACE OF STUD, UNLESS NOTED OTHERWISE.
B. THE GENERAL CONTRACTOR SHALL PROVIDE ALL BLOCKING REQUIRED TO ANCHOR WALL AND CEILING MOUNTED ITEMS, INCLUDING BUT NOT LIMITED TO TOILET ROOM ACCESSORIES, MILLWORK, CASEWORK, HANDRAILS, DOOR STOPS, ETC.
C. THE GENERAL CONTRACTOR SHALL CONFIRM AND COORDINATE ALL CIVIL, STRUCTURAL, MECHANICAL, ELECTRICAL, & PLUMBING ITEMS.
D. THE GENERAL CONTRACTOR SHALL FIELD VERIFY ALL DIMENSIONS & PROMPTLY REPORT ANY DISCREPANCIES TO THE ARCHITECT.
E. EQUIPMENT INDICATED WITH A DASHED LINE OR NOTED AS "NIC" (NOT PART OF THE CONTRACT) IS NOT PART OF THE CONTRACT. WHERE INSTALLATION IS REQUIRED BY CONTRACT DOCUMENTS, INSTALLATION SHALL BE PART OF THE CONTRACTORS WORK AND SHALL BE COMPLETE. IN ALL CASES BLOCKING REQUIRED FOR ITEMS NOT IN CONTRACT SHALL BE BY THE CONTRACTOR AND COORDINATED WITH THE OWNER.
F. REFER TO STRUCTURAL DRAWINGS FOR STRUCTURAL GRID DIMENSIONS.
G. REFER TO SHEET A501 FOR WALL PARTITION TYPES.
H. ALL DOORS TO BE LOCATED 6" OFF FACE OF WALL U.N.O.
I. REFER TO SHEET A600 FOR DOOR SCHEDULE.
J. REFER TO SHEET A400 FOR TYPICAL MOUNTING HEIGHTS.
K. CONTRACTOR SHALL COORDINATE SIGNAGE INSTALLATION WITH OWNER.
L. NOTE THAT PAINT COLORS ARE INDICATED FOR CLARITY, CONTRACTOR SHALL REFER TO FINISH SCHEDULE.
M. WHERE A PAINT COLOR IS INDICATED IT APPLIES TO ALL WALLS FOR THAT ROOM EXCEPT AS SPECIFICALLY INDICATED ON SHEETS A400 AND A401.

SHEET KEYNOTES

175 2" ALUMINUM GROMMETS
231 ACCESSIBLE WALL CABINET STORAGE AS REQUIRED PER 2012 NCSBC SECTION 1109.8 AND ICC A117.1
232 SS-1 COUNTER TOP
233 PL-2 COUNTER TOP
235 SUPPORT COUNTER AT OPENING WITH ADJACENT CABINET PANEL, REINFORCE AS REQUIRED TO PROVIDE SUPPORT

CLIENT AND PROJECT

NORTH CAROLINA DEPARTMENT OF TRANSPORTATION

SCO ID NO.: 14-11006-01A

NEW DIVISION 8 OFFICE BUILDING

150 DOT DRIVE
CARTHAGE, NC 28327

DESIGNER

ANDRE JOHNSON ARCHITECT

PO BOX 14637
RALEIGH, NORTH CAROLINA 27620
TELEPHONE: 919.661.6935
MAIL: info@andrejohnsonarchitect.com

© 2016 Andre Johnson Architect, PLLC
Duplication or reproduction by any means without the express written consent of Andre L. Johnson, Architect is a violation of Federal and international law. The information contained on this document is the intellectual property of Andre L. Johnson, Architect and all rights thereto are Reserved. For exceptions, refer to the Owner-Architect Agreement.

CONSULTANT

REGISTRATION

ANDRE JOHNSON ARCHITECT PLLC
52876
NORTH CAROLINA
RALEIGH, NC

ANDRE LAMAR JOHNSON
10528
NORTH CAROLINA
RALEIGH, NC
08/05/16

ISSUE

No.	Date	Description

SHEET INFO

CASEWORK ELEVATIONS

A412

PROJECT NO: P1423.00
DATE: AUGUST 5, 2016
BID DOCUMENTS

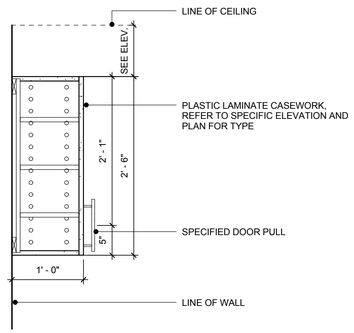

1 UPPER CABINET (NON ACCESSIBLE)
1" = 1'-0"

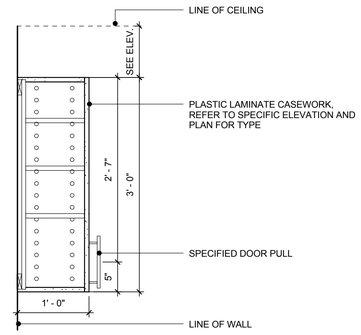

2 UPPER CABINET (ACCESSIBLE)
1" = 1'-0"

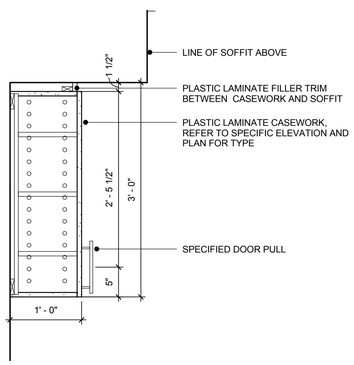

3 UPPER CABINET - RM 129 (ACCESSIBLE)
1" = 1'-0"

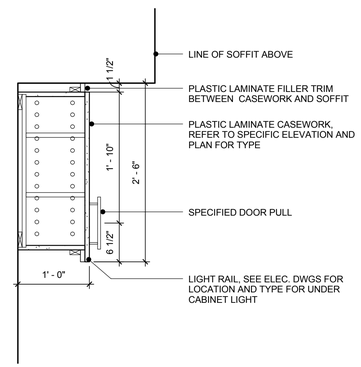

4 UPPER CABINET - RM 129 (NON ACCESSIBLE)
1" = 1'-0"

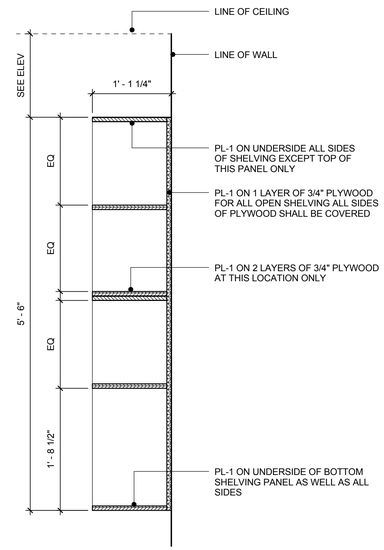

7 OPEN SHELVING - RM 111 (ACCESSIBLE)
1" = 1'-0"

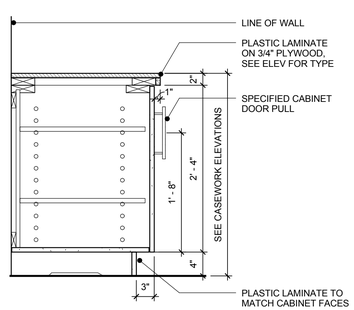

5 TYPICAL BASE CABINET
1" = 1'-0"

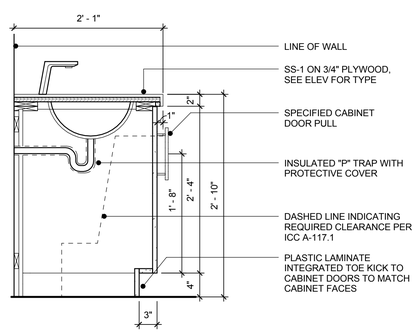

6 BASE CABINET @ SINK
1" = 1'-0"

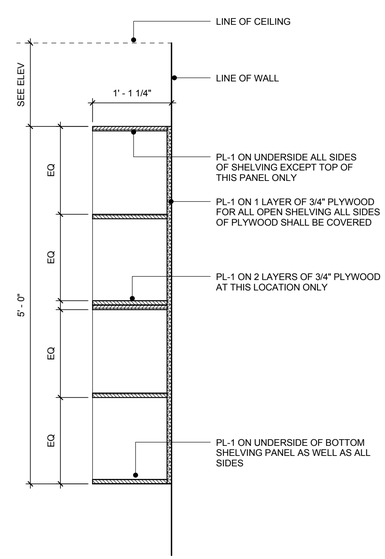

8 OPEN SHELVING - RM 111 (NON-ACCESSIBLE)
1" = 1'-0"

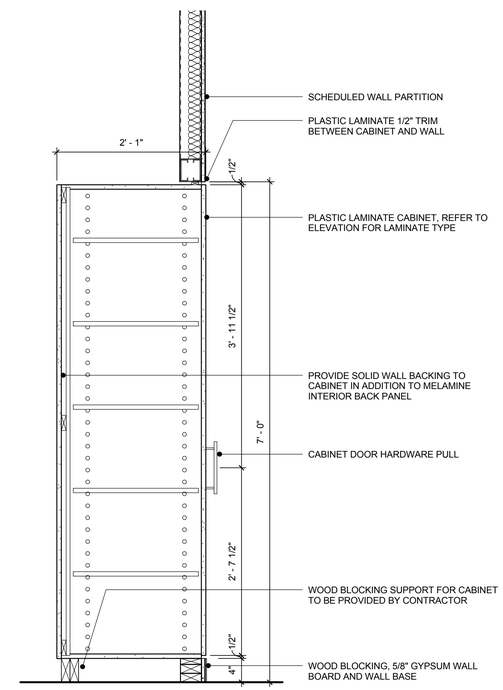

9 SECTION THRU TOILET ROOM CASEWORK
1" = 1'-0"

CLIENT AND PROJECT

NORTH CAROLINA DEPARTMENT OF TRANSPORTATION

SCO ID NO.: 14-11006-01A

NEW DIVISION 8 OFFICE BUILDING

150 DOT DRIVE
CARTHAGE, NC 28327

DESIGNER

ANDRE JOHNSON ARCHITECT

PO BOX 14637
RALEIGH, NORTH CAROLINA 27620
TELEPHONE: 919.661.6935
MAIL: info@andrejohnsonarchitect.com

© 2016 Andre Johnson Architect, PLLC
Duplication or reproduction by any means without the express written consent of Andre L. Johnson, Architect is a violation of Federal and international law. The information contained on this document is the intellectual property of Andre L. Johnson, Architect and all rights thereto are Reserved. For exceptions, refer to the Owner-Architect Agreement.

CONSULTANT

REGISTRATION

ANDRE JOHNSON ARCHITECT PLLC
CORPORATE ARCHITECTURAL CERTIFICATE OF AUTHORIZATION
52876
NORTH CAROLINA
RALEIGH, NC

ANDRE LAMAR JOHNSON
REGISTERED ARCHITECT
10528
NORTH CAROLINA
RALEIGH, NC
08/05/16

ISSUE

No.	Date	Description

SHEET INFO

CASEWORK DETAILS

A413

PROJECT NO: P1423.00
DATE: AUGUST 5, 2016
BID DOCUMENTS

EXTERIOR WALL ASSEMBLIES

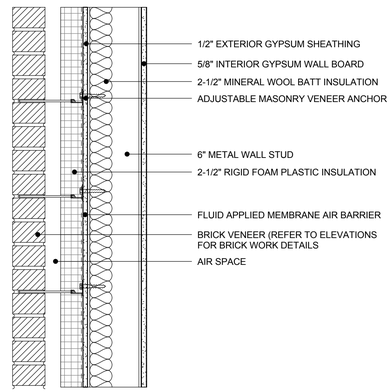

SECTION

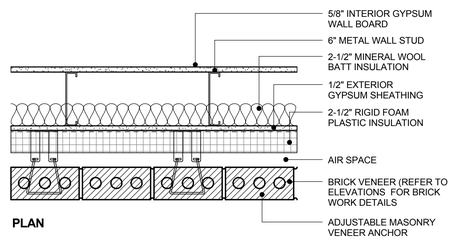

PLAN

W01

BRICK VENEER CAVITY WALL SYSTEM
NOTE THAT THIS WALL TYPE ALSO HAS AREA OF RECESSED ALTERNATE COURSING SET BACK 1/2". REFER TO SECTION DETAILS, ELEVATIONS AND PLANS FOR LOCATIONS OF RECESSED COURSING.
ALL PENETRATIONS THROUGH FOIL FACED INSUALTION SHALL BE TAPED PER MANUFACTURER'S RECOMMENDATION AND MINIMUM REQUIREMENTS IDENTIFIED IN THE SPECIFICATIONS.

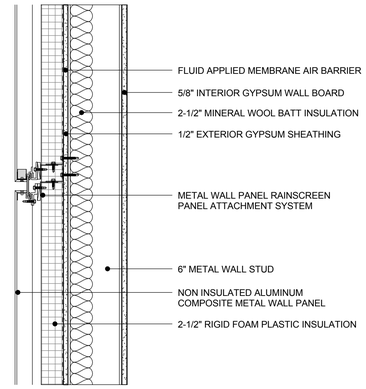

SECTION

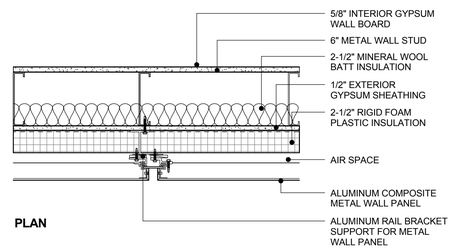

PLAN

W02

NON-INSULATED METAL WALL PANEL SYSTEM
NOTE THAT THE STUD WALL BACK UP ALIGNS WITH BRICK CAVITY WALL STUD WALL BACK UP AT THE INTERIOR SIDE. REFER TO PLAN DETAILS FOR MORE INFORMATION AND COORDINATION OF WALL FRAMING. NOTE THIS WALL OCCURS AT THE ROOF OVERHANG AND OTHER AREAS. REFER TO PLAN DETAILS FOR MORE INFORMATION
ALL PENETRATIONS THROUGH FOIL FACED INSUALTION SHALL BE TAPED PER MANUFACTURER'S RECOMMENDATION AND MINIMUM REQUIREMENTS IDENTIFIED IN THE SPECIFICATIONS.

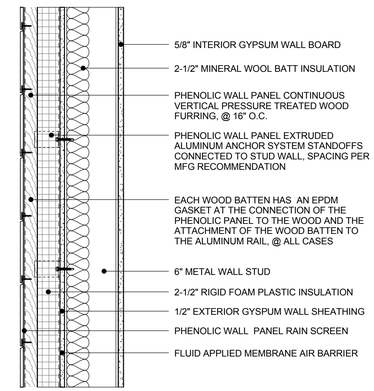

SECTION

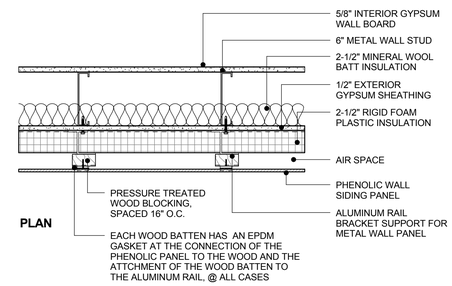

PLAN

W03

PHENOLIC WALL PANEL CAVITY WALL SYSTEM
NOTE THAT THE STUD WALL BACK UP ALIGNS WITH BRICK CAVITY WALL STUD WALL BACK UP AT THE INTERIOR SIDE. REFER TO PLAN DETAILS FOR MORE INFORMATION AND COORDINATION OF WALL FRAMING.
ALL PENETRATIONS THROUGH FOIL FACED INSUALTION SHALL BE TAPED PER MANUFACTURER'S RECOMMENDATION AND MINIMUM REQUIREMENTS IDENTIFIED IN THE SPECIFICATIONS.

ROOF ASSEMBLIES

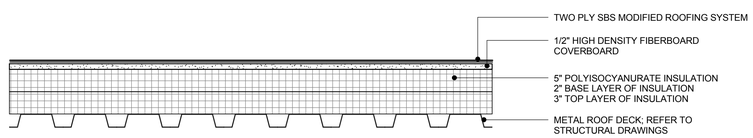

R01

TWO PLY SBS MODIFIED BUILT UP ROOFING SYSTEM
NOTE THAT TAPERED INSULATION OCCURS TO PROVIDE POSITIVE DRAINAGE TO ROOF DRAINS. REFER TO ROOF PLAN FOR INFORMATION

CLIENT AND PROJECT

NORTH CAROLINA DEPARTMENT OF TRANSPORTATION

SCO ID NO.: 14-11006-01A

NEW DIVISION 8 OFFICE BUILDING

150 DOT DRIVE
CARTHAGE, NC 28327

DESIGNER

ANDRE JOHNSON ARCHITECT

PO BOX 14637
RALEIGH, NORTH CAROLINA 27620
TELEPHONE: 919.661.6935
MAIL: info@andrejohnsonarchitect.com

© 2016 Andre Johnson Architect, PLLC
Duplication or reproduction by any means without the express written consent of Andre L. Johnson, Architect is a violation of Federal and international law. The information contained on this document is the intellectual property of Andre L. Johnson, Architect and all rights thereto are Reserved. For exceptions, refer to the Owner-Architect Agreement.

CONSULTANT

REGISTRATION

ANDRE JOHNSON ARCHITECT PLLC
ARCHITECTURAL CORPORATION
52876
NORTH CAROLINA
RALEIGH, NC

ANDRE LAMAR JOHNSON
10528
NORTH CAROLINA
RALEIGH, NC
08/05/16

ISSUE

No.	Date	Description

SHEET INFO

EXTERIOR ASSEMBLY TYPES

A500

PROJECT NO: P1423.00
DATE: AUGUST 5, 2016
BID DOCUMENTS

PARTITION SCHEDULE

WALL TAG	DESCRIPTION	WIDTH	HEIGHT	SOUND BATT	RATING	UL#	STC	COMMENTS
1A	(1) Layer 5/8" GB - 7/8" Metal Furring	1 1/2"	As Required	No	NA	NA	N/A	Identified as required on plans
1B	(1) Layer 5/8" GB - 7/8" Metal Furring	1 1/2"	To Deck	No	NA	NA	N/A	GWB to Deck
2A	(1) Layer 5/8" GB - 2 1/2" Metal Furring	3 1/8"	6" Above Ceiling	No	NA	NA	N/A	
2C	(1) Layer 5/8" GWB - 3-5/8" Metal Studs	3 1/8"	To Deck	Yes	NA	NA	>35	
2D	(1) Layer 5/8" Cement Board - 3-5/8" Metal Studs	3 13/16"	To Deck	Yes	NA	NA	>35	Cement Board to Deck
3A	(1) Layer 5/8" GWB - 3-5/8" Metal Studs	4 1/4"	6" Above Ceiling	No	NA	NA	N/A	
3B	(1) Layer 5/8" GWB - 3-5/8" Metal Studs	4 1/4"	To Deck	No	NA	NA	N/A	
3C	(1) Layer 5/8" GWB - 3-5/8" Metal Studs	4 1/4"	To Deck	Yes	NA	NA	>35	
3D	(1) Layer 5/8" GWB -3-5/8" Metal Studs - (1) Layer 5/8" GWB	4 7/8"	6" Above Ceiling	No	NA	NA	N/A	
3E	(1) Layer 5/8" GWB -3-5/8" Metal Studs - (1) Layer 5/8" GWB	4 7/8"	6" Above Ceiling	No	NA	NA	N/A	
3F	(2) Layers 5/8" GWB - 3-5/8" Metal Studs	4 7/8"	To Deck	Yes	NA	NA	62	STC Rating achieved with double wall construction. Both GWB layers to Deck. See plans
3G	(1) Layer 5/8" GWB -3-5/8" Metal Studs - (1) Layer 5/8" GWB	4 7/8"	To Deck	Yes	NA	NA	49	
3J	(1) Layer 5/8" Cement Board - 3-5/8" Metal Studs	4 15/16"	6" Above Ceiling	No	NA	NA	>35	Cement Board on side to have tile, see Finish Plan and Elevations.
3K	(1) Layer 5/8" Cement Board - 3-5/8" Metal Studs	4 15/16"	To Deck	Yes	NA	NA	>35	Cement Board on side to have tile, see Finish Plan and Elevations. Cement Board to Deck
3L	(1) Layer 5/8" Cement Board -3-5/8" Metal Studs - (1) Layer 5/8" GWB	5 9/16"	6" Above Ceiling	No	NA	NA	N/A	
3M	(1) Layer 5/8" Cement Board -3-5/8" Metal Studs - (1) Layer 5/8" Cement Board	6 1/4"	To Deck	Yes	NA	NA	49	Cement Board on side to have tile, see Finish Plan and Elevations. Cement Board both sides to Deck
3N	(1) Layer 3/4" Plywood -3-5/8" Metal Studs - (1) Layer 5/8" GWB	5"	6" Above Ceiling	No	NA	NA	N/A	Plastic Laminate PL-4 on plywood for wall partition. Plywood and laminate extend to the ceiling soffit. See finish plan for more information
3P	(1) Layer 3/4" Plywood -3-5/8" Metal Studs - (1) Layer 5/8" GWB	5"	To Deck	Yes	NA	NA	49	Plastic Laminate PL-4 on plywood for wall partition. Plywood and laminate extend to the ceiling soffit. See finish plan for more information

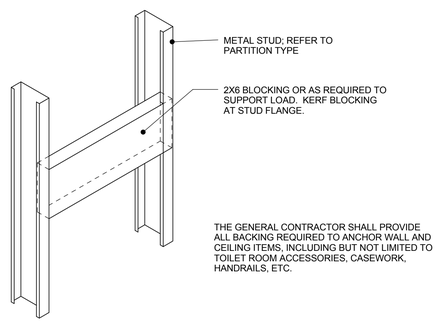

WOOD BLOCKING

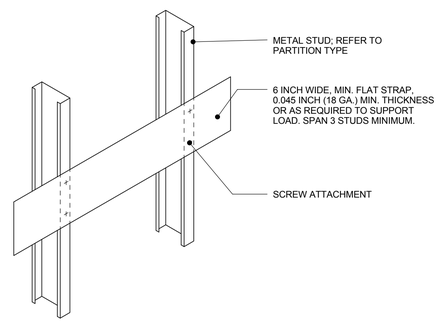

FLAT STRAP BACKING (ALTERNATE)

1 TYPICAL BACKING DETAIL
1 1/2" = 1'-0"

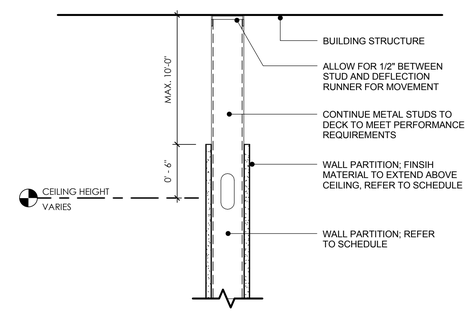

2 TYPICAL WALL EXTENSION TO DECK (NON-ACOUSTICAL)
1 1/2" = 1'-0"

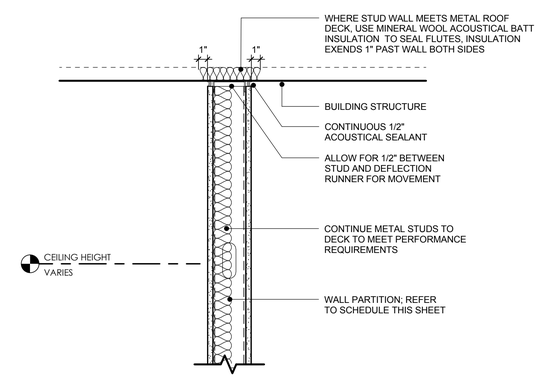

3 TYPICAL WALL EXTENSION TO DECK (ACOUSTICAL)
1 1/2" = 1'-0"

GENERAL NOTES

A. THE GENERAL CONTRACTOR SHALL BE RESPONSIBLE FOR MAINTAINING METAL STUD FRAMING WITHIN STRICT CONSTRUCTION TOLERANCES. DEVIATION FROM TOLERANCES ARE NOT THE RESPONSIBILITY OF THE ARCHITECT.
B. THE GENERAL CONTRACTOR SHALL COORDINATE THE ITEMS INDICATED ON THIS SHEET WITH THE SPECIFICATIONS FOR THESE ITEMS.
C. THE GENERAL CONTRATOR SHALL COORDINATE THE REQUIRED GYPSUM BOARD PER WALL TYPE AS INDICATED IN THE SPECIFICATIONS FOR LOCATIONS OF MOISTURE RESISTANT OR IMPACT RESISTANT GYPSUM WALLBOARD.
D. ALL METAL STUD WALLS IDENTIFIED AS "TO DECK" SHALL EXTEND AND ATTACH TO STRUCTURE EXCEPT WHERE DUCTWORK PREVENTS EXTENSION TO DECK. IN THESE INSTANCES, THE WALL SHALL EXTEND TO 4" TO THE UNDERSIDE OF THE DUCTWORK SUPPORT AND THE TOP OF THE STUD WALL SHALL BE SUPPORTED WITH DIAGONAL BRACING WHERE REQUIRED TO MEET PERFORMANCE REQUIREMENTS.
E. WHERE WALL PARTITION REQUIRES SOUND BATT INSULATION, THICKNESS OF SOUND BATT INSULATION SHALL BE 3" FOR METAL WALL STUDS > 3" AND 2-1/2" < 3".
F. NOT ALL WALL TYPES INDICATED IN THIS SCHEDULE ARE TAGGED OR IDENTIFIED ON SHEET A101. PLEASE REFER TO PLAN DETAILS WHERE THE WALL PARTITION CONSTRUCTION TYPE IS IDENTIFIED.

SHEET KEYNOTES

CLIENT AND PROJECT

NORTH CAROLINA DEPARTMENT OF TRANSPORTATION

SCO ID NO.: 14-11006-01A

NEW DIVISION 8 OFFICE BUILDING

150 DOT DRIVE
CARTHAGE, NC 28327

DESIGNER

ANDRE JOHNSON ARCHITECT

PO BOX 14637
RALEIGH, NORTH CAROLINA 27620
TELEPHONE: 919.661.6935
MAIL: info@andrejohnsonarchitect.com

© 2016 Andre Johnson Architect, PLLC
Duplication or reproduction by any means without the express written consent of Andre L. Johnson, Architect is a violation of Federal and international law. The information contained on this document is the intellectual property of Andre L. Johnson, Architect and all rights thereto are Reserved. For exceptions, refer to the Owner-Architect Agreement.

CONSULTANT

REGISTRATION

ANDRE JOHNSON ARCHITECT PLLC
REGISTERED ARCHITECTURAL CORPORATION
52876
NORTH CAROLINA
RALEIGH, NC

ANDRE LAMAR JOHNSON
REGISTERED ARCHITECT
10528
NORTH CAROLINA
RALEIGH, NC
08/05/16

ISSUE

No.	Date	Description

SHEET INFO

PARTITION TYPES

A501

PROJECT NO: P1423.00
DATE: AUGUST 5, 2016
BID DOCUMENTS

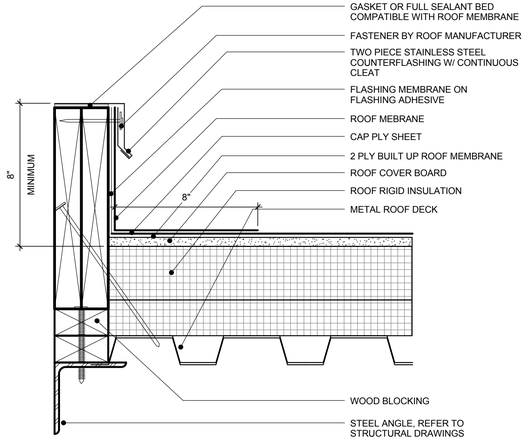

2 ROOF CURB DETAIL

3" = 1'-0"

THIS DETAIL FOR USE WITH ROOF MOUNTED EQUIPMENT INDICATED ON MEP SHEETS AND THE ARCHITECURE ROOF PLAN. CONTRACTOR TO COORDINATE BETWEEN TRADES FOR REQUIRED CURB LOCATION

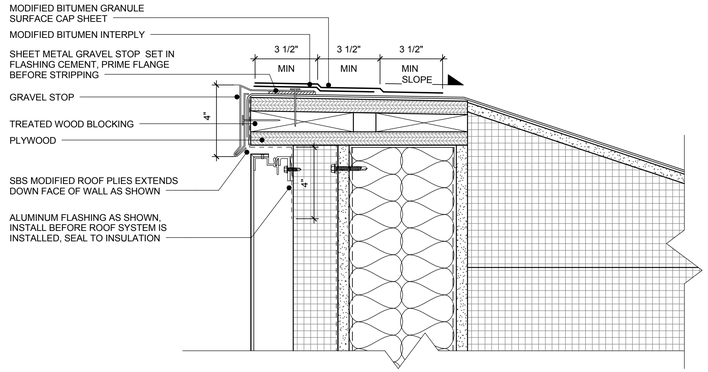

10 ROOF EDGE DETAIL - METAL WALL PANEL

3" = 1'-0"

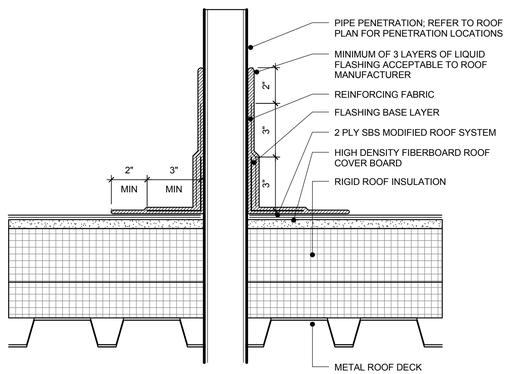

3 SINGLE ROOF PIPE PENETRATION

3" = 1'-0"

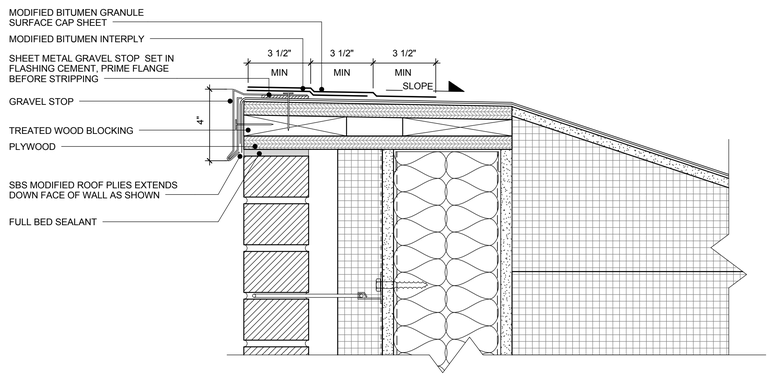

9 ROOF EDGE DETAIL - BRICK WALL

3" = 1'-0"

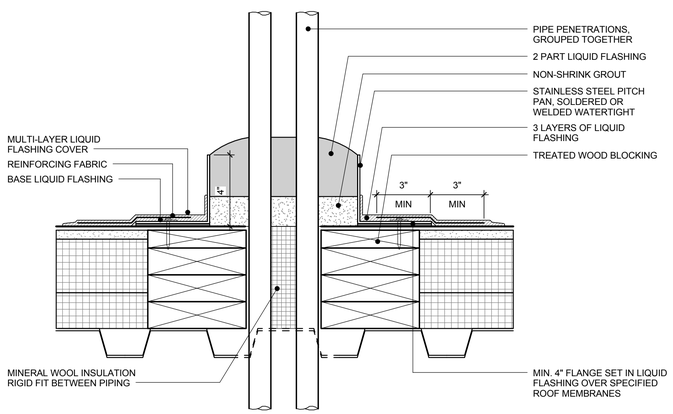

4 PENETRATION POCKET - MULTIPLE PIPE PENETRATION

3" = 1'-0"

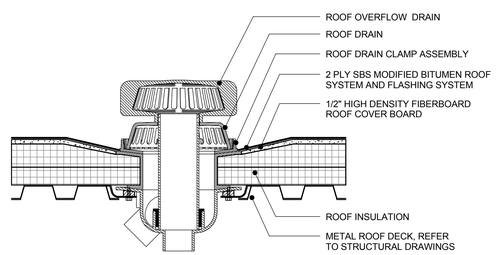

5 OVERFLOW ROOF DRAIN DETAIL

1 1/2" = 1'-0"

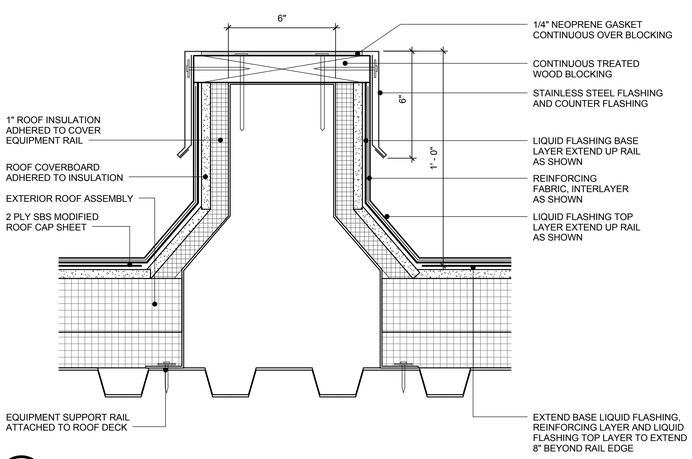

1 ROOF EQUIPMENT RAIL

3" = 1'-0"

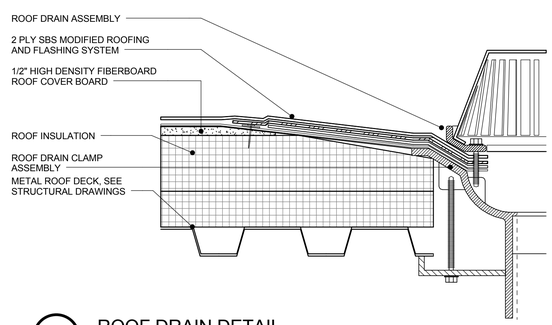

7 ROOF DRAIN DETAIL

3" = 1'-0"

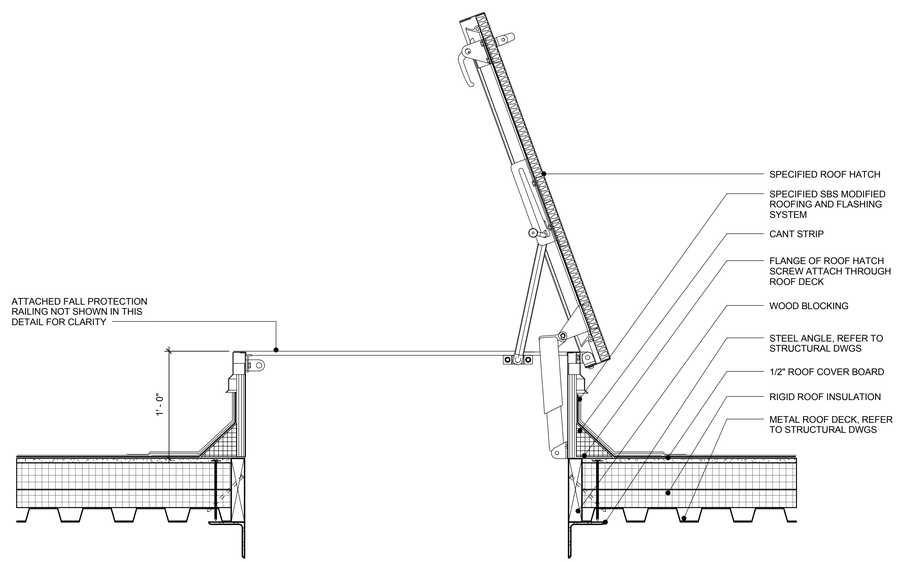

8 ROOF HATCH DETAIL

1 1/2" = 1'-0"

CLIENT AND PROJECT

NORTH CAROLINA DEPARTMENT OF TRANSPORTATION

SCO ID NO.: 14-11006-01A

NEW DIVISION 8 OFFICE BUILDING

150 DOT DRIVE
CARTHAGE, NC 28327

DESIGNER

ANDRE JOHNSON ARCHITECT

PO BOX 14637
RALEIGH, NORTH CAROLINA 27620
TELEPHONE: 919.661.6935
MAIL: info@andrejohnsonarchitect.com

© 2016 Andre Johnson Architect, PLLC
Duplication or reproduction by any means without the express written consent of Andre L. Johnson, Architect is a violation of Federal and international law. The information contained on this document is the intellectual property of Andre L. Johnson, Architect and all rights thereto are Reserved. For exceptions, refer to the Owner-Architect Agreement.

CONSULTANT

REGISTRATION

ANDRE JOHNSON ARCHITECT PLLC
PROFESSIONAL ARCHITECTURAL CORPORATION
52876
NORTH CAROLINA
RALEIGH, NC

ANDRE LAMAR JOHNSON
REGISTERED ARCHITECT
10528
NORTH CAROLINA
RALEIGH, NC
08/05/16

ISSUE

No.	Date	Description

SHEET INFO

TYPICAL ROOF CONSTRUCTION DETAILS

A502

PROJECT NO: P1423.00
DATE: AUGUST 5, 2016
BID DOCUMENTS

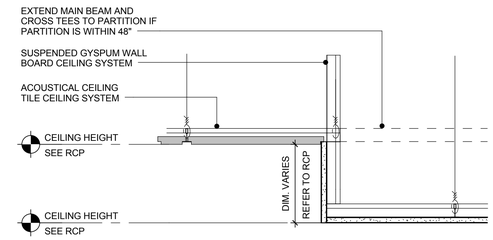

ACOUSTICAL CEILING TILE TO SUSPENDED GYPSUM WALL BOARD CEILING

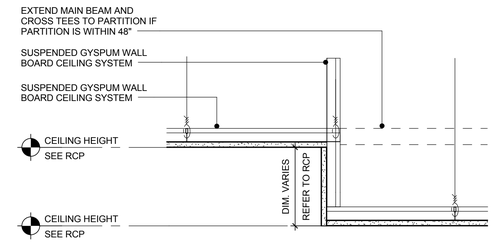

GYPSUM WALL BOARD CEILING TO SUSPENDED GYPSUM WALL BOARD CEILING

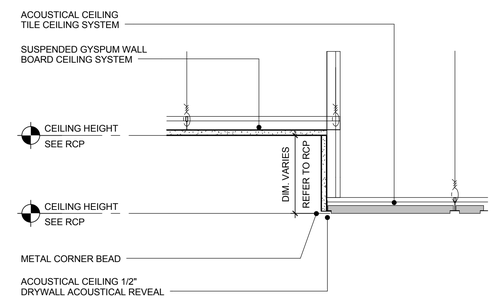

GYPSUM WALL BOARD CEILING TO ACOUSTICAL CEILING TILE SYSTEM

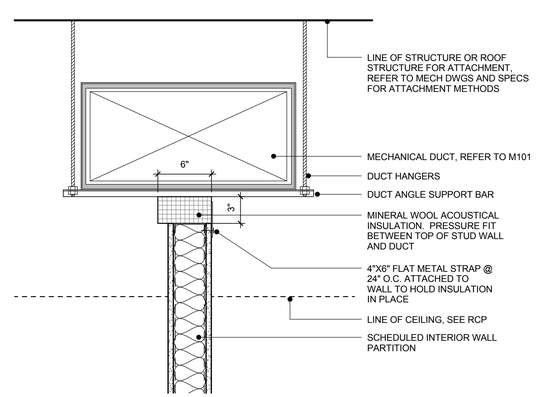

2 STC INTERIOR WALL AND DUCT INTERSECTION

1 1/2" = 1'-0"

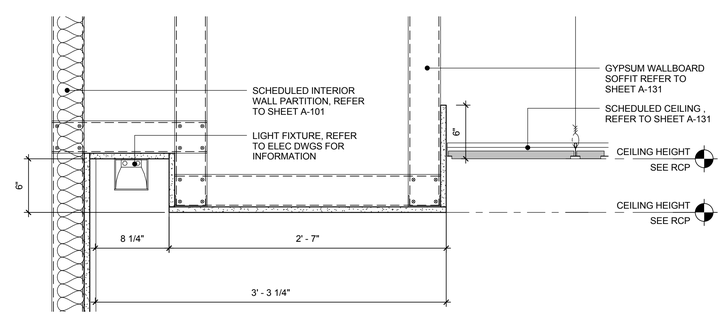

GYPSUM WALL BOARD CEILING WITH LIGHT COVE AT TOILET SINKS

1 TYPICAL CEILING DETAILS

1 1/2" = 1'-0"

CLIENT AND PROJECT

NORTH CAROLINA
DEPARTMENT OF
TRANSPORTATION

SCO ID NO.: 14-11006-01A

**NEW DIVISION 8
OFFICE BUILDING**

150 DOT DRIVE
CARTHAGE, NC 28327

DESIGNER

ANDRE JOHNSON ARCHITECT

PO BOX 14637
RALEIGH, NORTH CAROLINA 27620
TELEPHONE: 919.661.6935
MAIL: info@andrejohnsonarchitect.com

© 2016 Andre Johnson Architect, PLLC
Duplication or reproduction by any means without the express written consent of Andre L. Johnson, Architect is a violation of Federal and international law. The information contained on this document is the intellectual property of Andre L. Johnson, Architect and all rights thereto are Reserved. For exceptions, refer to the Owner-Architect Agreement.

CONSULTANT

REGISTRATION

ANDRE JOHNSON ARCHITECT, PLLC
ARCHITECTURAL CORPORATION
52876
NORTH CAROLINA
RALEIGH, NC

ANDRE LAMAR JOHNSON
REGISTERED ARCHITECT
10528
NORTH CAROLINA
RALEIGH, NC

08/05/16

ISSUE

No.	Date	Description

SHEET INFO

**CEILING
DETAILS**

A503

PROJECT NO: P1423.00
DATE: AUGUST 5, 2016
BID DOCUMENTS

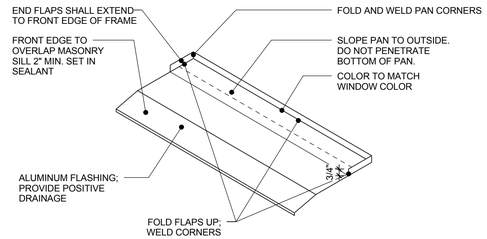

1 TYPICAL SILL PAN DETAILS

1 1/2" = 1'-0"

FRONT EDGE OF SILL PAN FLASHING IS PER SPECIFIC SECTION DETAILS

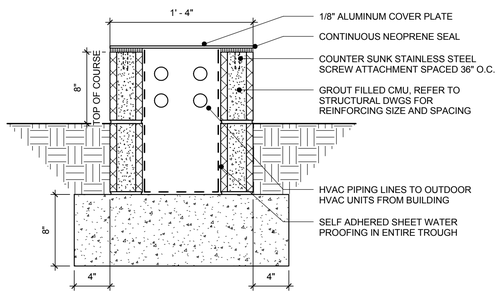

7 SECTION THROUGH PIPE TROUGH

1 1/2" = 1'-0"

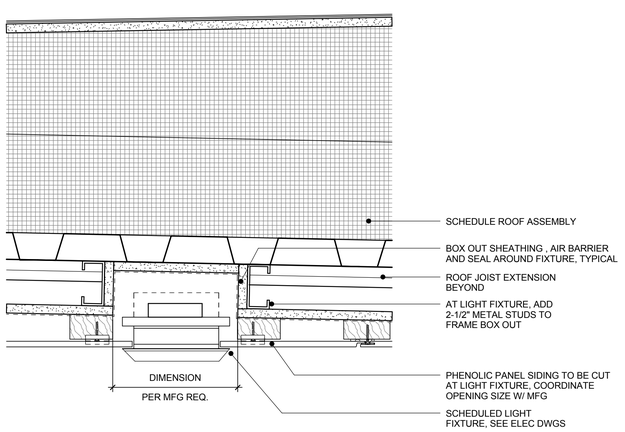

3 EXTERIOR SOFFIT LIGHT

3" = 1'-0"

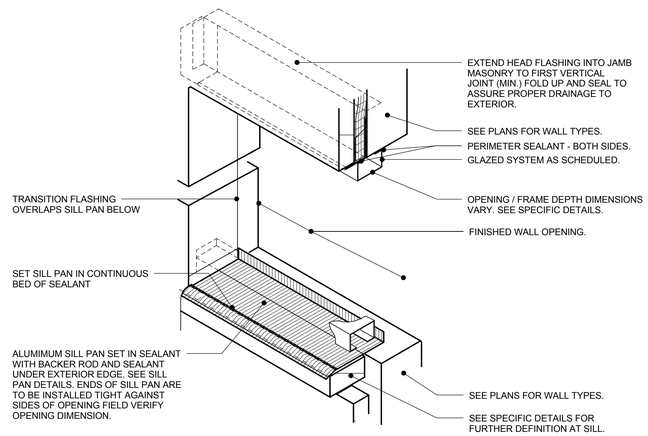

8 TYPICAL SILL PAN & HEAD DETAILS-LOUVER ONLY

3" = 1'-0"

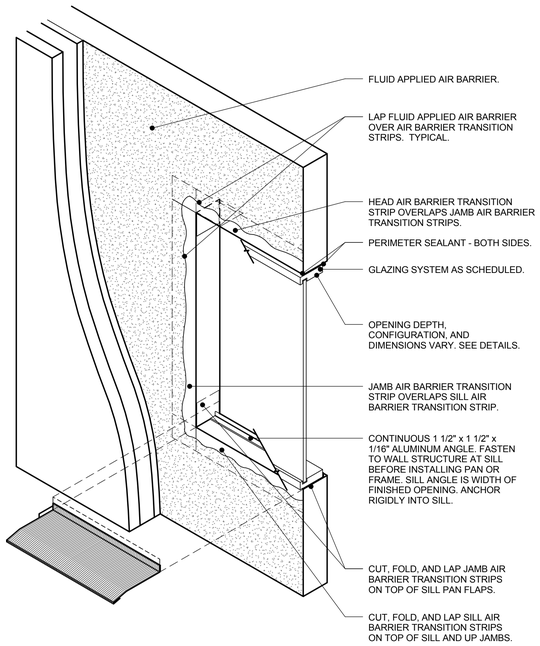

9 TYPICAL FLASHING DETAILS @ OPENINGS

1/2" = 1'-0"

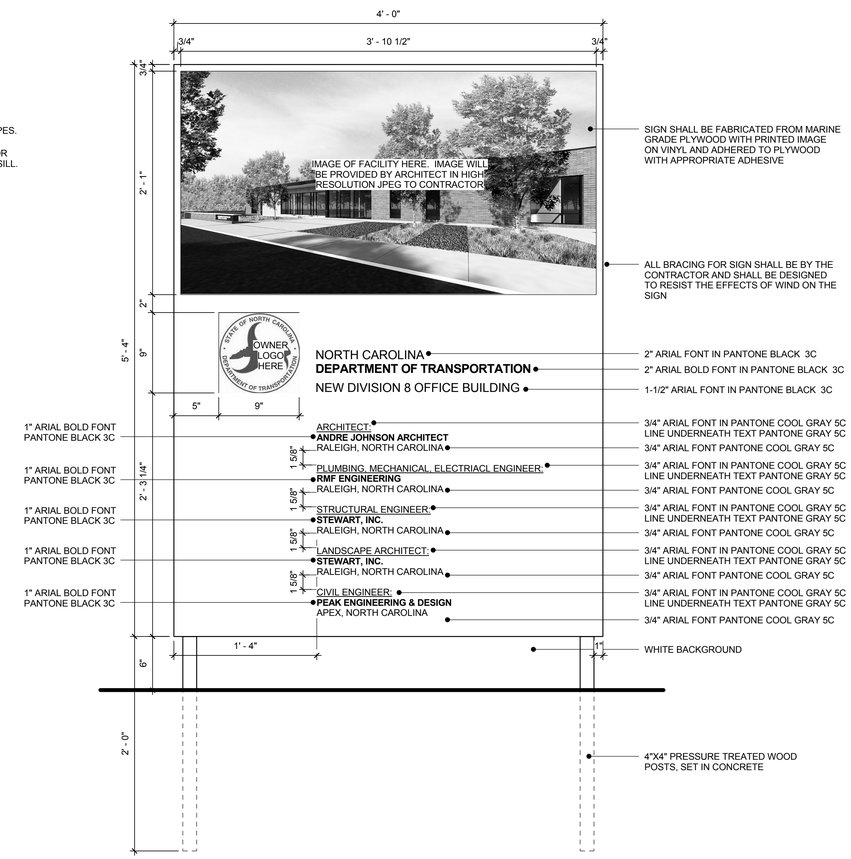

2 CONSTRUCTION SIGN

1 1/2" = 1'-0"

CLIENT AND PROJECT

NORTH CAROLINA DEPARTMENT OF TRANSPORTATION

SCO ID NO.: 14-11006-01A

NEW DIVISION 8 OFFICE BUILDING

150 DOT DRIVE
CARTHAGE, NC 28327

DESIGNER

ANDRE JOHNSON ARCHITECT

PO BOX 14637
RALEIGH, NORTH CAROLINA 27620
TELEPHONE: 919.661.6935
MAIL: info@andrejohnsonarchitect.com

© 2016 Andre Johnson Architect, PLLC
Duplication or reproduction by any means without the express written consent of Andre L. Johnson, Architect is a violation of Federal and international law. The information contained on this document is the intellectual property of Andre L. Johnson, Architect and all rights thereto are Reserved. For exceptions, refer to the Owner-Architect Agreement.

CONSULTANT

REGISTRATION

ANDRE JOHNSON ARCHITECT, PLLC
CORPORATE ARCHITECTURAL CERTIFICATION
52876
NORTH CAROLINA
RALEIGH, NC

ANDRE AMAR JOHNSON
10528
NORTH CAROLINA
RALEIGH, NC
08/05/16

ISSUE

No.	Date	Description

SHEET INFO

TYPICAL CONSTRUCTION DETAILS & CONSTRUCTION SIGN

A504

PROJECT NO: P1423.00
DATE: AUGUST 5, 2016
BID DOCUMENTS

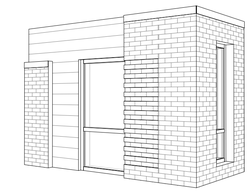

2 3D VIEW OF MOCK UP

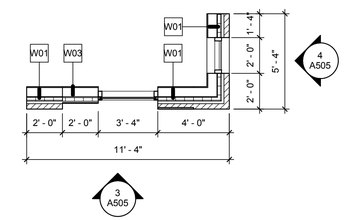

1 MOCK UP FLOOR PLAN

1/4" = 1'-0"

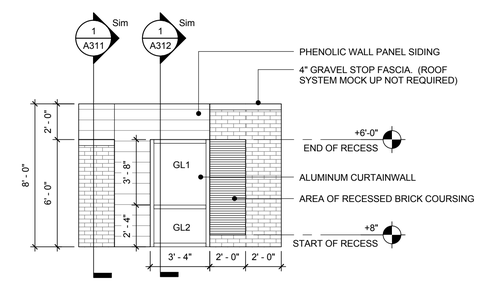

3 MOCK UP ELEVATION 1

1/4" = 1'-0"

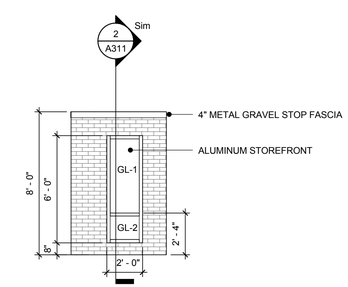

4 MOCK UP ELEVATION 2

1/4" = 1'-0"

CLIENT AND PROJECT

NORTH CAROLINA DEPARTMENT OF TRANSPORTATION

SCO ID NO.: 14-11006-01A

NEW DIVISION 8 OFFICE BUILDING

150 DOT DRIVE
CARTHAGE, NC 28327

DESIGNER

ANDRE JOHNSON ARCHITECT

PO BOX 14637
RALEIGH, NORTH CAROLINA 27620
TELEPHONE: 919.661.6935
MAIL: info@andrejohnsonarchitect.com

© 2016 Andre Johnson Architect, PLLC
Duplication or reproduction by any means without the express written consent of Andre L. Johnson, Architect is a violation of Federal and international law. The information contained on this document is the intellectual property of Andre L. Johnson, Architect and all rights thereto are Reserved. For exceptions, refer to the Owner-Architect Agreement.

CONSULTANT

REGISTRATION

ANDRE L. JOHNSON ARCHITECT, PLLC
ARCHITECTURAL CORPORATION
52876
NORTH CAROLINA
RALEIGH, NC

ANDRE L. JOHNSON
10528
NORTH CAROLINA
RALEIGH, NC
08/05/16

ISSUE

No.	Date	Description

SHEET INFO

CONSTRUCTION MOCK UP

A505

PROJECT NO: P1423.00
DATE: AUGUST 5, 2016
BID DOCUMENTS

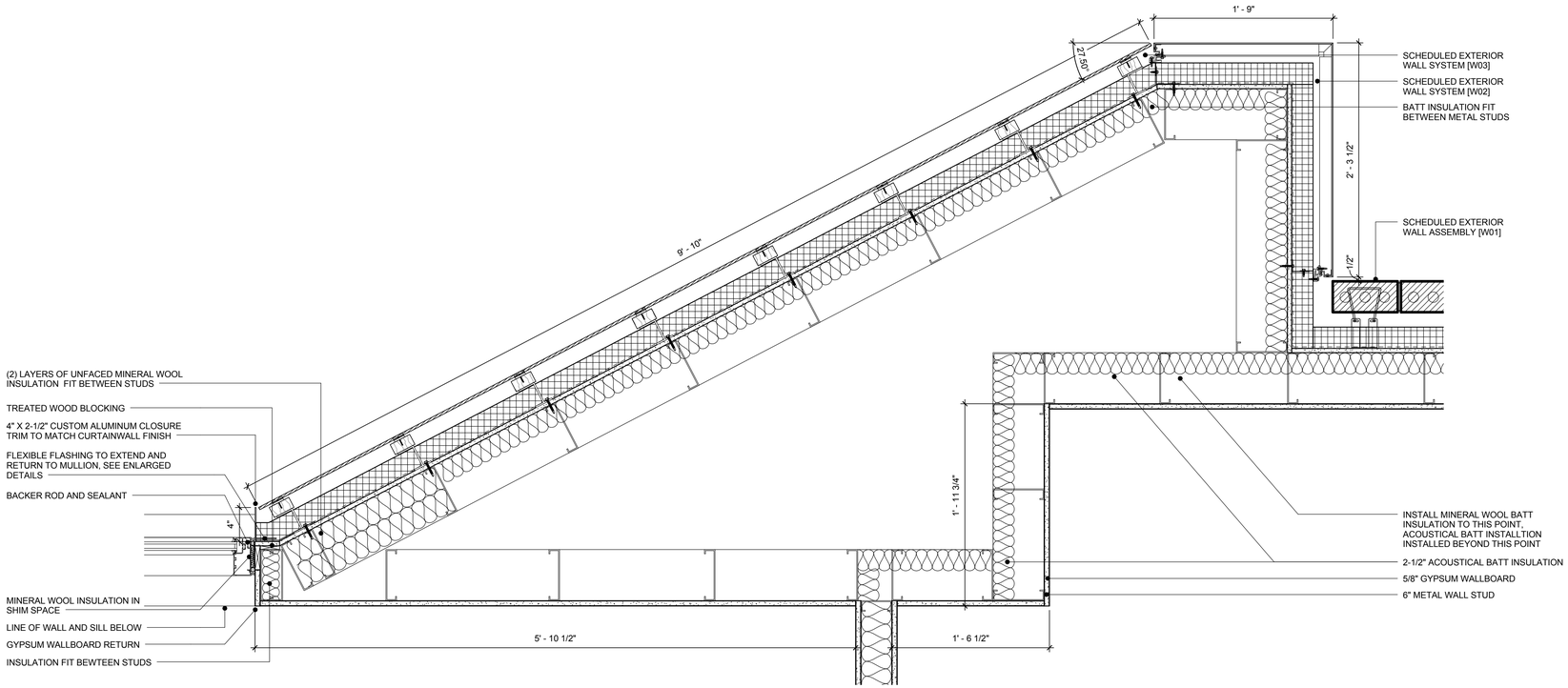

1 PLAN DETAIL @ NORTH ANGLED WALL

1 1/2" = 1'-0"

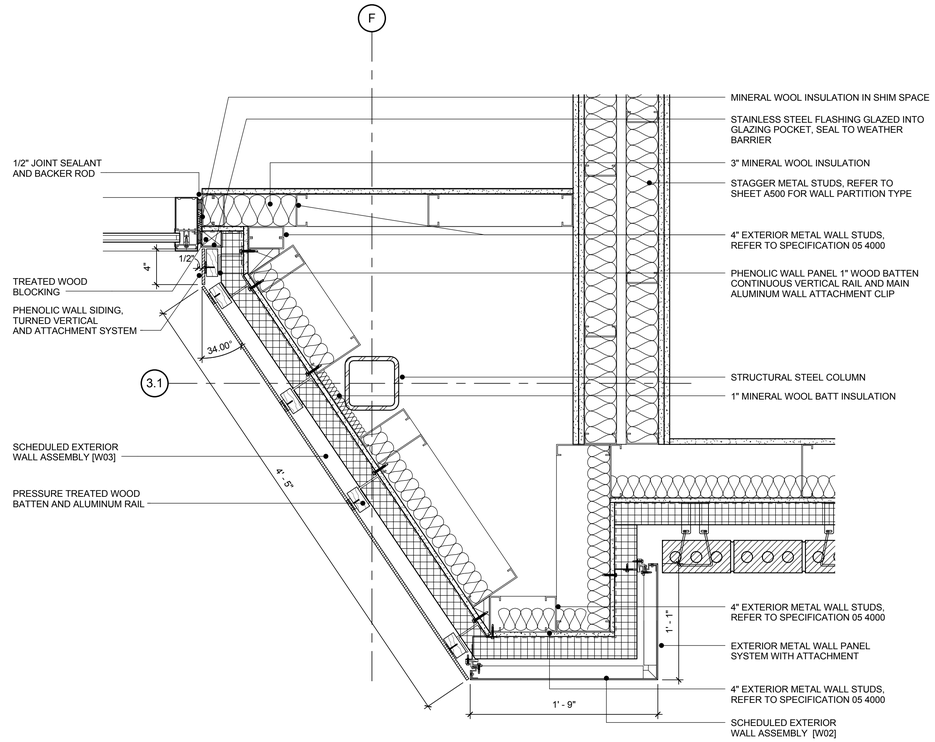

2 PLAN DETAIL @ MECH ROOM

1 1/2" = 1'-0"

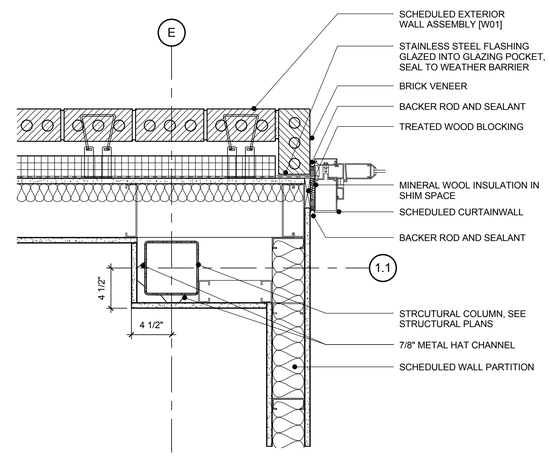

3 PLAN DETAIL @ NORTH ENTRY

1 1/2" = 1'-0"

CLIENT AND PROJECT

NORTH CAROLINA DEPARTMENT OF TRANSPORTATION

SCO ID NO.: 14-11006-01A

NEW DIVISION 8 OFFICE BUILDING

150 DOT DRIVE
CARTHAGE, NC 28327

DESIGNER

ANDRE JOHNSON ARCHITECT

PO BOX 14637
RALEIGH, NORTH CAROLINA 27620
TELEPHONE: 919.661.6935
MAIL: info@andrejohnsonarchitect.com

© 2016 Andre Johnson Architect, PLLC
Duplication or reproduction by any means without the express written consent of Andre L. Johnson, Architect is a violation of Federal and international law. The information contained on this document is the intellectual property of Andre L. Johnson, Architect and all rights thereto are Reserved. For exceptions, refer to the Owner-Architect Agreement.

CONSULTANT

REGISTRATION

ANDRE JOHNSON ARCHITECT, PLLC
CORPORATE ARCHITECTURAL CERTIFICATE
52876
NORTH CAROLINA
RALEIGH, NC

ANDRE LAMAR JOHNSON
10528
NORTH CAROLINA
RALEIGH, NC

08/05/16

ISSUE

No.	Date	Description

SHEET INFO

EXTERIOR PLAN DETAILS

A510

PROJECT NO: P1423.00
DATE: AUGUST 5, 2016
BID DOCUMENTS

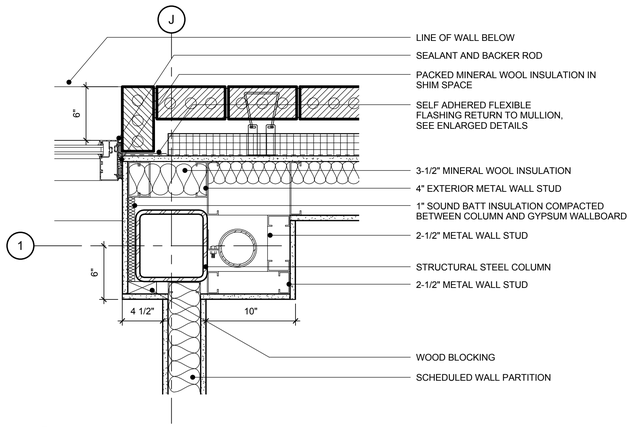

8 COLUMN COVER AT GRID "J" AND "1"

1 1/2" = 1'-0"

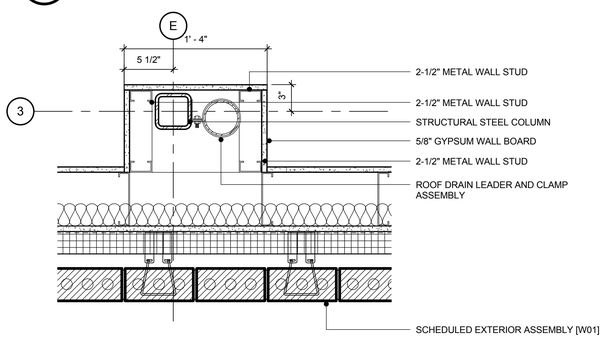

7 COLUMN COVER AT GRID "E" AND "3"

1 1/2" = 1'-0"

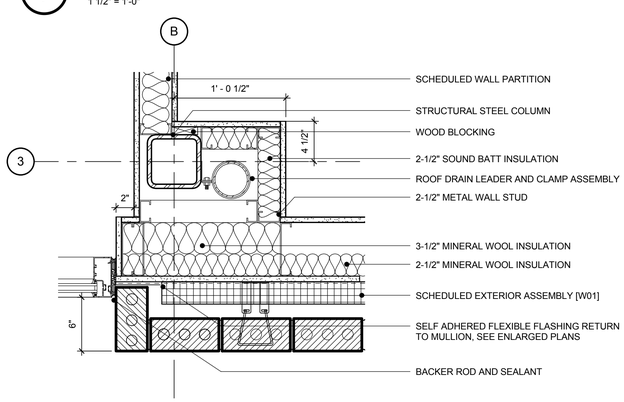

6 COLUMN COVER AT "B" AND 3

1 1/2" = 1'-0"

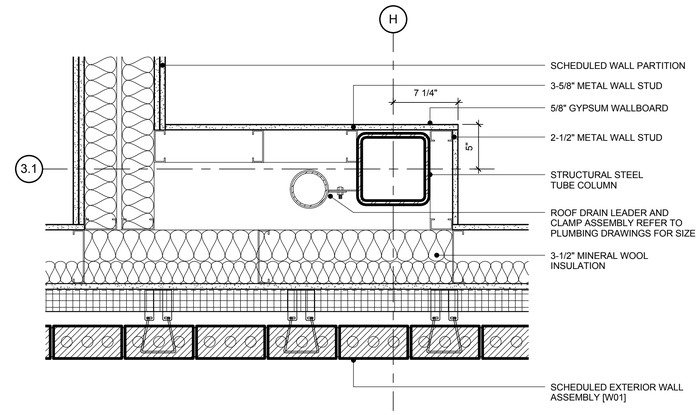

9 COLUMN COVER AT "H" AND "3.1"

1 1/2" = 1'-0"

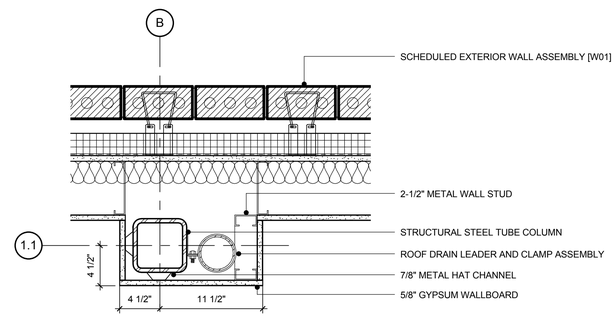

5 COLUMN COVER AT GRID "B"

1 1/2" = 1'-0"

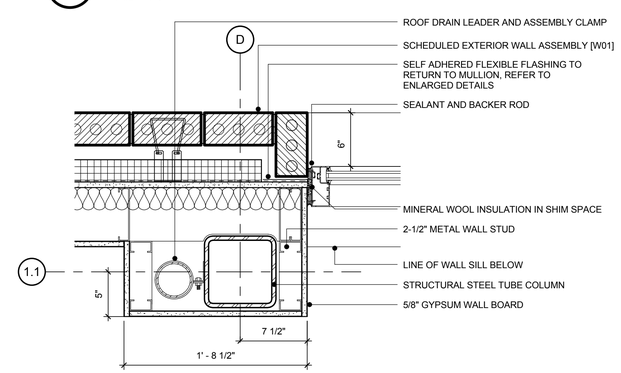

4 COLUMN COVER AT GRID "D" AND "1.1"

1 1/2" = 1'-0"

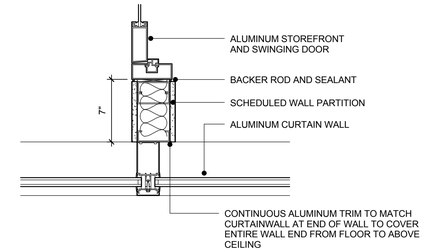

1 PLAN DETAIL @ BREAKROOM

1 1/2" = 1'-0"

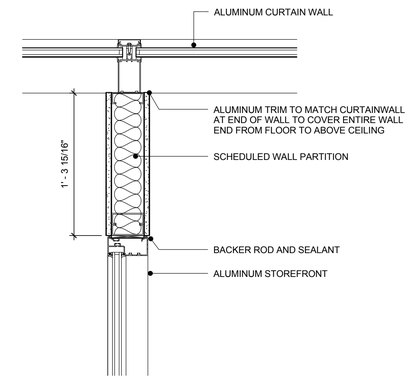

2 PLAN DETAIL @ ENTRY-2

1 1/2" = 1'-0"

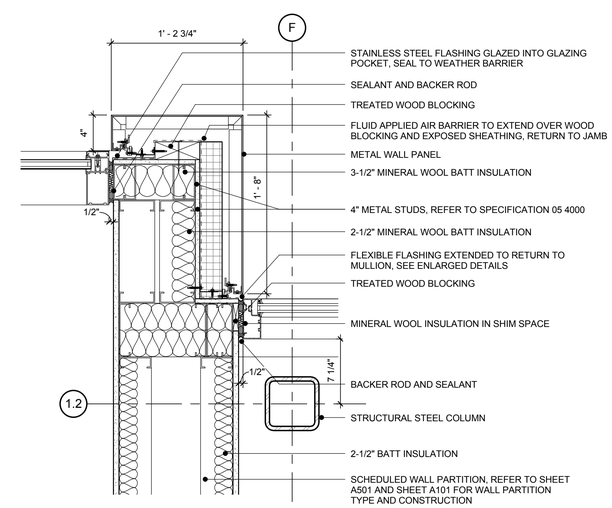

3 PLAN DETAIL @ ENTRY

1 1/2" = 1'-0"

CLIENT AND PROJECT

NORTH CAROLINA DEPARTMENT OF TRANSPORTATION

SCO ID NO.: 14-11006-01A

NEW DIVISION 8 OFFICE BUILDING

150 DOT DRIVE
CARTHAGE, NC 28327

DESIGNER

ANDRE JOHNSON ARCHITECT

PO BOX 14637
RALEIGH, NORTH CAROLINA 27620
TELEPHONE: 919.661.6935
MAIL: info@andrejohnsonarchitect.com

© 2016 Andre Johnson Architect, PLLC
Duplication or reproduction by any means without the express written consent of Andre L. Johnson, Architect is a violation of Federal and international law. The information contained on this document is the intellectual property of Andre L. Johnson, Architect and all rights thereto are Reserved. For exceptions, refer to the Owner-Architect Agreement.

CONSULTANT

REGISTRATION

ANDRE L. JOHNSON ARCHITECT, PLLC
ARCHITECTURAL CORPORATION
52876
NORTH CAROLINA
RALEIGH, NC

ANDRE L. JOHNSON
10528
NORTH CAROLINA
RALEIGH, NC
08/05/16

ISSUE

No.	Date	Description

SHEET INFO

EXTERIOR PLAN DETAILS

A511

PROJECT NO: P1423.00
DATE: AUGUST 5, 2016
BID DOCUMENTS

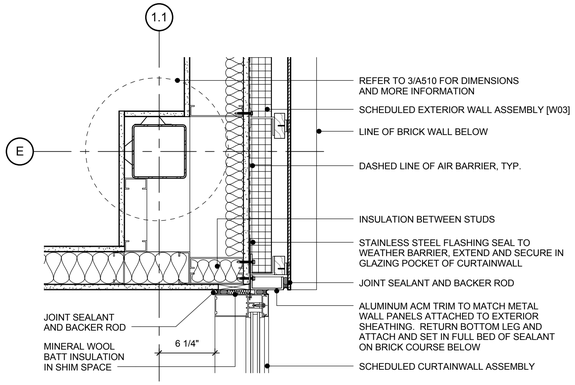

7 PHENOLIC SIDING HIGH CORNER @ NORTH ENTRY
1 1/2" = 1'-0"

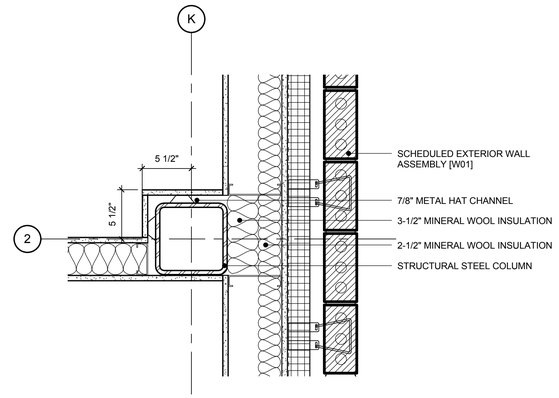

4 COLUMN COVER AT GRID "K" AND "2"
1 1/2" = 1'-0"

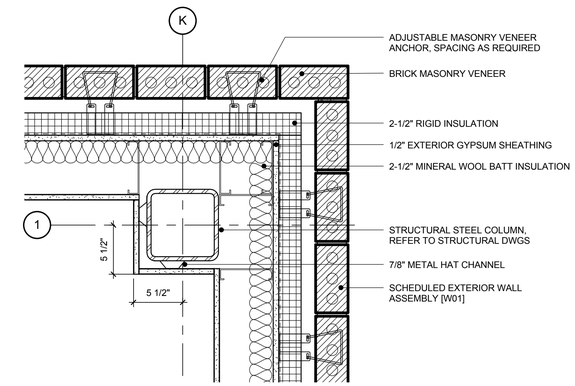

3 COLUMN COVER AT GRID "K" AND "1"
1 1/2" = 1'-0"

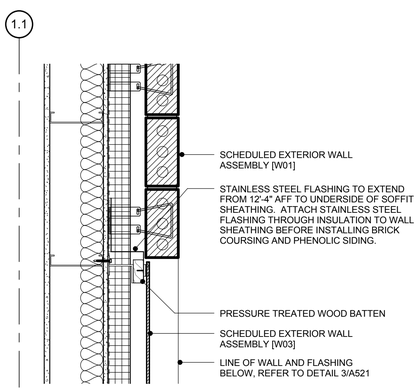

8 PHENOLIC SIDING TO BRICK TRANSITION (HIGH)
1 1/2" = 1'-0"

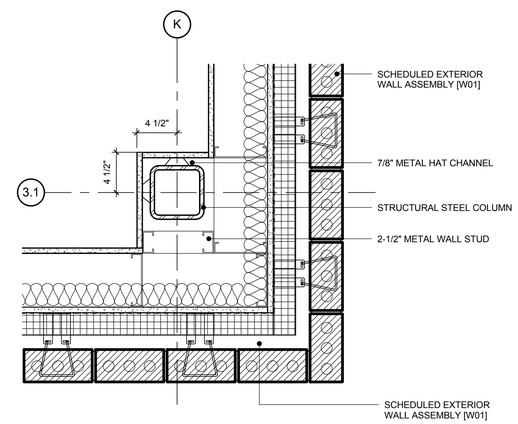

5 COLUMN COVER AT GRID "K" AND "3.1"
1 1/2" = 1'-0"

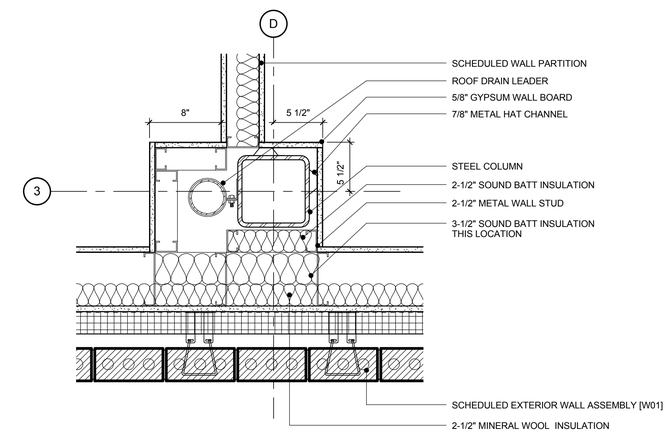

2 COLUMN COVER AT GRID "D" AND "3"
1 1/2" = 1'-0"

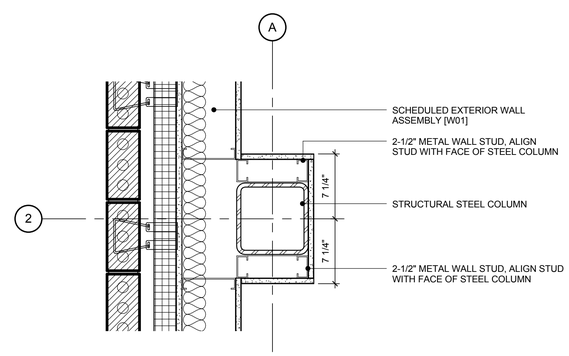

6 COLUMN COVER AT GRID "A" AND "2"
1 1/2" = 1'-0"

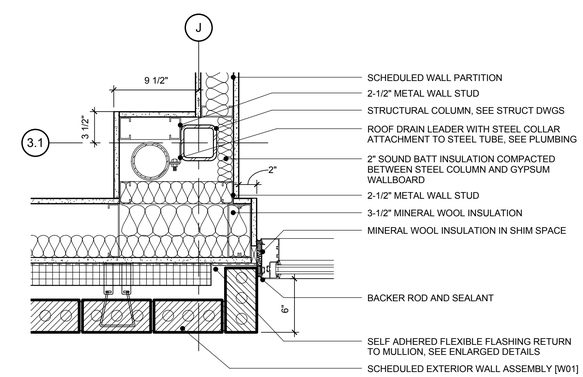

1 COLUMN COVER AT GRID "J" AND "3.1"
1 1/2" = 1'-0"

CLIENT AND PROJECT

NORTH CAROLINA DEPARTMENT OF TRANSPORTATION

SCO ID NO.: 14-11006-01A

NEW DIVISION 8 OFFICE BUILDING

150 DOT DRIVE
CARTHAGE, NC 28327

DESIGNER

ANDRE JOHNSON ARCHITECT
PO BOX 14637
RALEIGH, NORTH CAROLINA 27620
TELEPHONE: 919.661.6935
MAIL: info@andrejohnsonarchitect.com

© 2016 Andre Johnson Architect, PLLC
Duplication or reproduction by any means without the express written consent of Andre L. Johnson, Architect is a violation of Federal and international law. The information contained on this document is the intellectual property of Andre L. Johnson, Architect and all rights thereto are Reserved. For exceptions, refer to the Owner-Architect Agreement.

CONSULTANT

REGISTRATION

ANDRE JOHNSON ARCHITECT, PLLC
52876
NORTH CAROLINA
RALEIGH, NC

ANDRE LAMAR JOHNSON
10528
NORTH CAROLINA
RALEIGH, NC
08/05/16

ISSUE

No.	Date	Description

SHEET INFO

EXTERIOR PLAN DETAILS

A512

PROJECT NO: P1423.00
DATE: AUGUST 5, 2016
BID DOCUMENTS

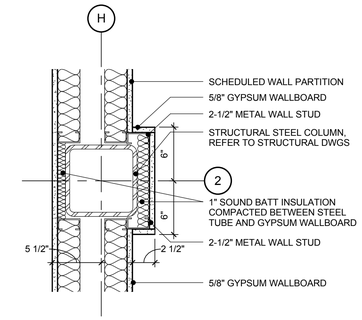

5 COLUMN COVER AT GRID "H" AND "2"

1 1/2" = 1'-0"

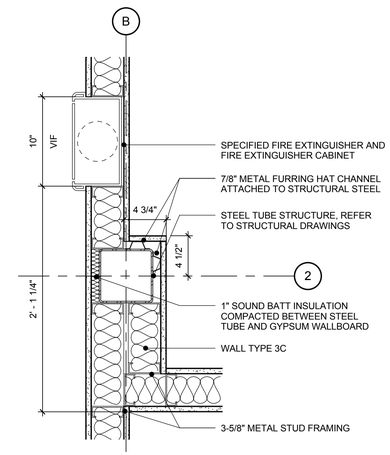

3 COLUMN COVER AT GRID "B" AND "2"

1 1/2" = 1'-0"

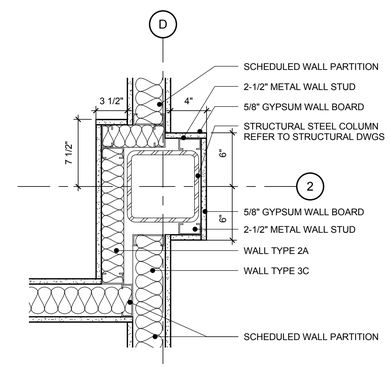

4 COLUMN COVER AT GRID "D" AND "2"

1 1/2" = 1'-0"

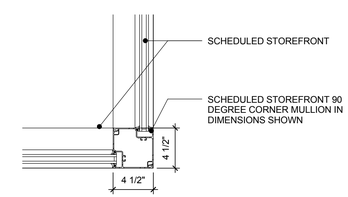

2 STOREFRONT CORNER DETAIL

1 1/2" = 1'-0"

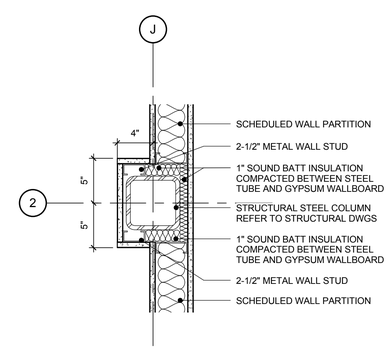

6 COLUMN COVER AT "J" AND "2"

1 1/2" = 1'-0"

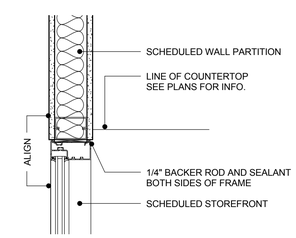

1 BREAKROOM STOREFRONT DETAIL

1 1/2" = 1'-0"

CLIENT AND PROJECT

NORTH CAROLINA DEPARTMENT OF TRANSPORTATION

SCO ID NO.: 14-11006-01A

NEW DIVISION 8 OFFICE BUILDING

150 DOT DRIVE
CARTHAGE, NC 28327

DESIGNER

ANDRE JOHNSON ARCHITECT

PO BOX 14637
RALEIGH, NORTH CAROLINA 27620
TELEPHONE: 919.661.6935
MAIL: info@andrejohnsonarchitect.com

© 2016 Andre Johnson Architect, PLLC
Duplication or reproduction by any means without the express written consent of Andre L. Johnson, Architect is a violation of Federal and international law. The information contained on this document is the intellectual property of Andre L. Johnson, Architect and all rights thereto are Reserved. For exceptions, refer to the Owner-Architect Agreement.

CONSULTANT

REGISTRATION

ANDRE JOHNSON ARCHITECT PLLC
52876
NORTH CAROLINA
RALEIGH, NC

ANDRE LAMAR JOHNSON
10528
NORTH CAROLINA
RALEIGH, NC
08/05/16

ISSUE

No.	Date	Description

SHEET INFO

INTERIOR PLAN DETAILS

A513

PROJECT NO: P1423.00
DATE: AUGUST 5, 2016
BID DOCUMENTS

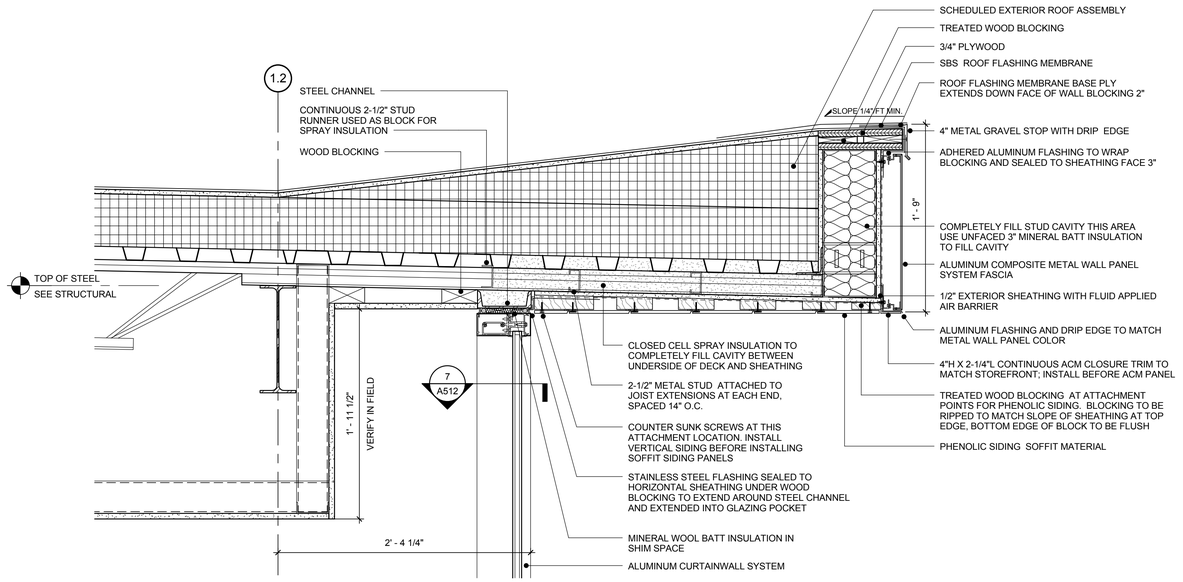

4 NORTH OVERHANG DETAIL
1 1/2" = 1'-0"

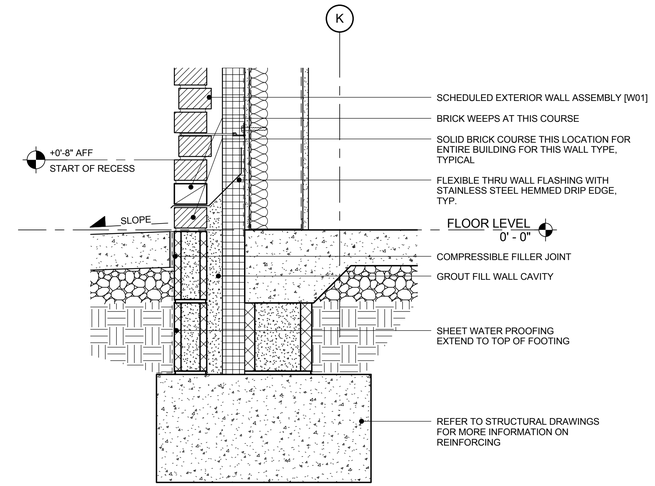

1 TYPICAL WALL @ FOUNDATION DETAIL
1 1/2" = 1'-0"

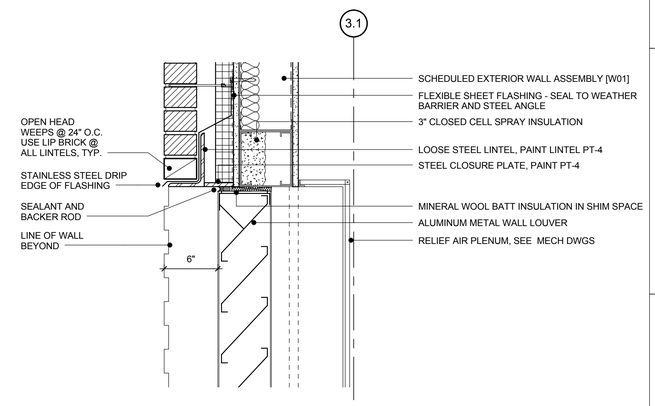

2 LOUVER HEAD DETAIL
1 1/2" = 1'-0"

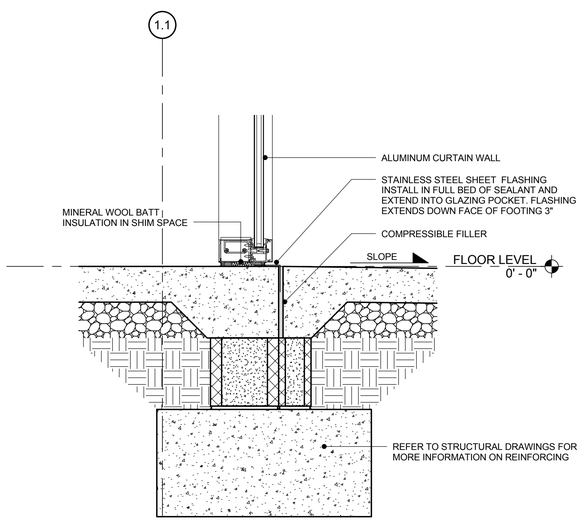

5 CURTAINWALL BASE DETAIL
1 1/2" = 1'-0"

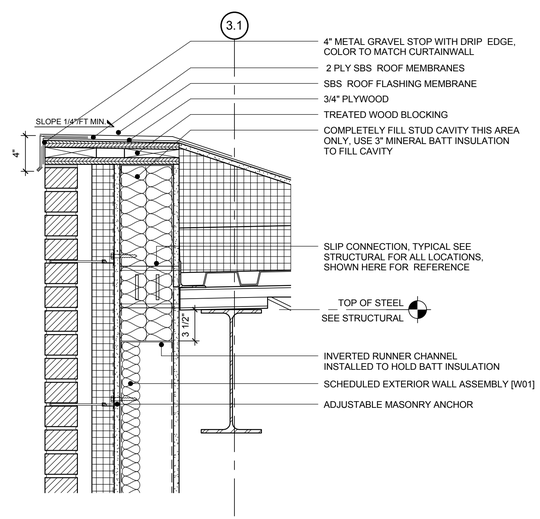

6 ROOF EDGE DETAIL
1 1/2" = 1'-0"

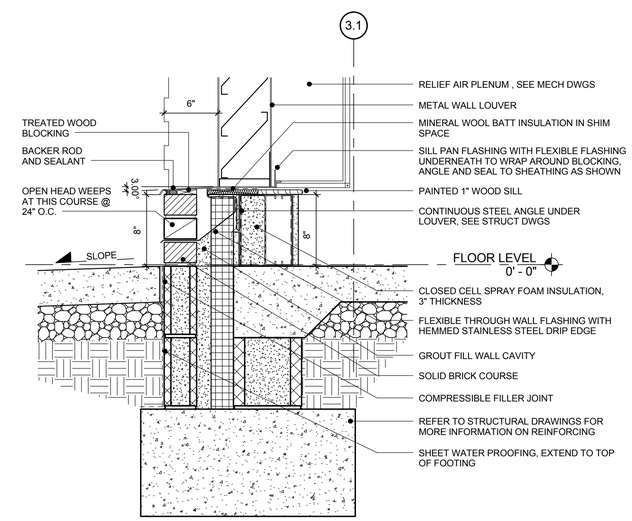

3 LOUVER SILL DETAIL
1 1/2" = 1'-0"

CLIENT AND PROJECT

NORTH CAROLINA DEPARTMENT OF TRANSPORTATION

SCO ID NO.: 14-11006-01A

NEW DIVISION 8 OFFICE BUILDING

150 DOT DRIVE
CARTHAGE, NC 28327

DESIGNER

ANDRE JOHNSON ARCHITECT

PO BOX 14637
RALEIGH, NORTH CAROLINA 27620
TELEPHONE: 919.661.6935
MAIL: info@andrejohnsonarchitect.com

© 2016 Andre Johnson Architect, PLLC
Duplication or reproduction by any means without the express written consent of Andre L. Johnson, Architect is a violation of Federal and international law. The information contained on this document is the intellectual property of Andre L. Johnson, Architect and all rights thereto are Reserved. For exceptions, refer to the Owner-Architect Agreement.

CONSULTANT

REGISTRATION

ANDRE JOHNSON ARCHITECT, PLLC
ARCHITECTURAL CORPORATION
52876
NORTH CAROLINA
RALEIGH, NC

ANDRE L. MAR JOHNSON
LICENSED
10528
NORTH CAROLINA
RALEIGH, NC
08/05/16

ISSUE

No.	Date	Description

SHEET INFO

EXTERIOR SECTION DETAILS

A520

PROJECT NO: P1423.00
DATE: AUGUST 5, 2016
BID DOCUMENTS

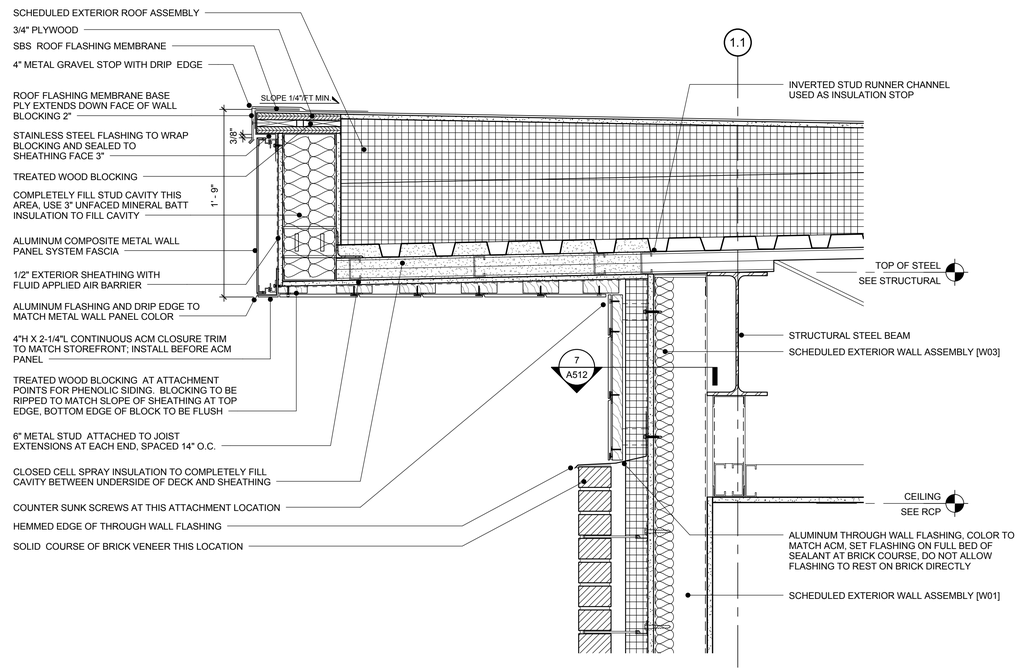

3 PHENOLIC PANEL @ ROOF OVERHANG

1 1/2" = 1'-0"

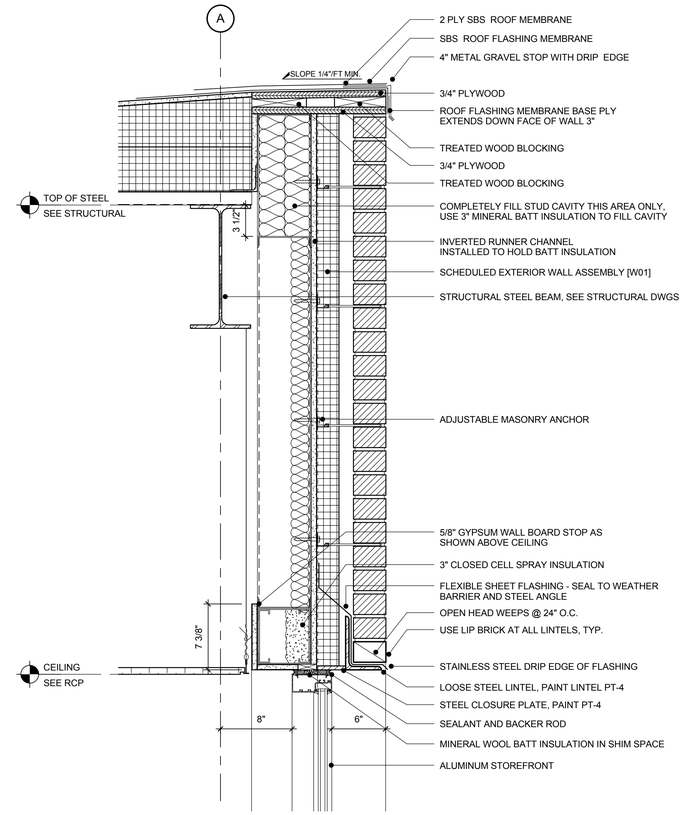

1 WINDOW OPENING DETAIL

1 1/2" = 1'-0"

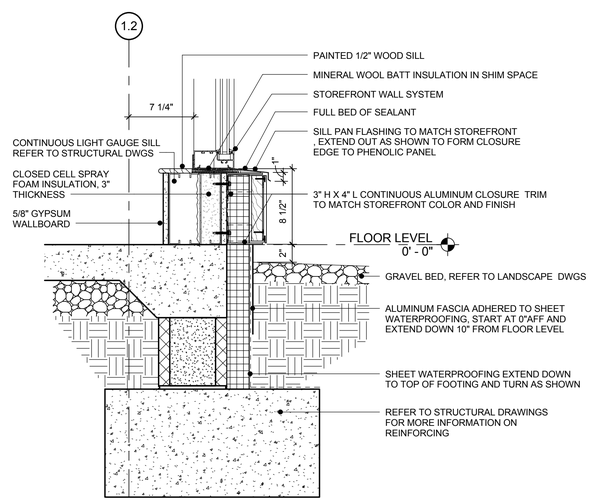

5 PHENOLIC PANEL @ BASE

1 1/2" = 1'-0"

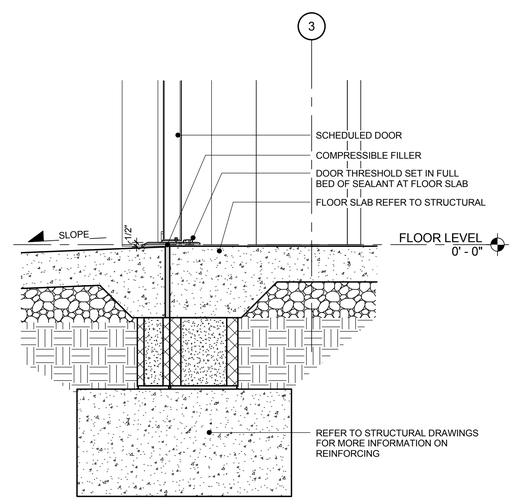

4 ENTRY BASE DETAIL @ DOOR

1 1/2" = 1'-0"

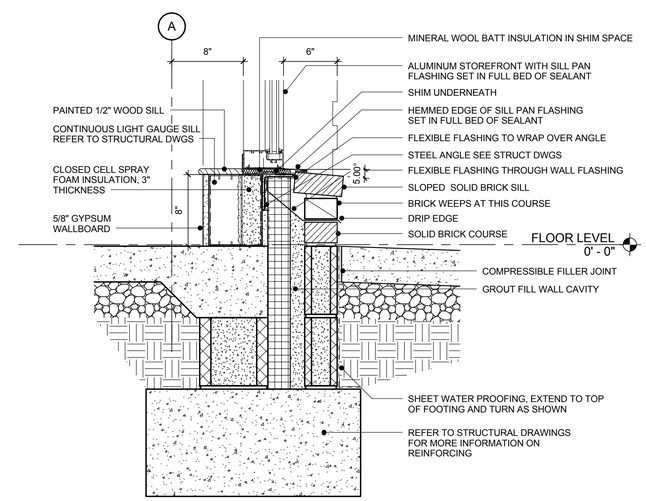

2 STOREFRONT BASE DETAIL @ BRICK

1 1/2" = 1'-0"

CLIENT AND PROJECT

NORTH CAROLINA DEPARTMENT OF TRANSPORTATION

SCO ID NO.: 14-11006-01A

NEW DIVISION 8 OFFICE BUILDING

150 DOT DRIVE
CARTHAGE, NC 28327

DESIGNER

ANDRE JOHNSON ARCHITECT

PO BOX 14637
RALEIGH, NORTH CAROLINA 27620
TELEPHONE: 919.661.6935
MAIL: info@andrejohnsonarchitect.com

© 2016 Andre Johnson Architect, PLLC
Duplication or reproduction by any means without the express written consent of Andre L. Johnson, Architect is a violation of Federal and international law. The information contained on this document is the intellectual property of Andre L. Johnson, Architect and all rights thereto are Reserved. For exceptions, refer to the Owner-Architect Agreement.

CONSULTANT

REGISTRATION

ANDRE JOHNSON ARCHITECT PLLC
REGISTERED ARCHITECTURAL CORPORATION
52876
NORTH CAROLINA
RALEIGH, NC

ANDRE LAMAR JOHNSON
REGISTERED ARCHITECT
10528
NORTH CAROLINA
RALEIGH, NC
08/05/16

ISSUE

No.	Date	Description

SHEET INFO

EXTERIOR SECTION DETAILS

A521

PROJECT NO: P1423.00
DATE: AUGUST 5, 2016
BID DOCUMENTS

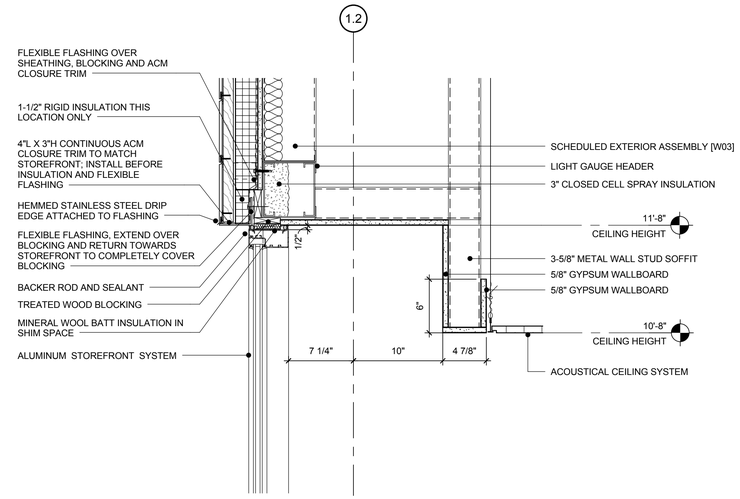

1 SOFFIT DETAIL AT EXTERIOR WINDOWS

1 1/2" = 1'-0"

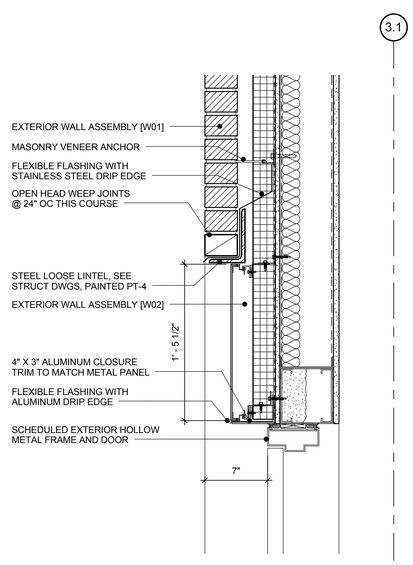

3 SECTION DETAIL @ DOOR HEAD & MWP

1 1/2" = 1'-0"

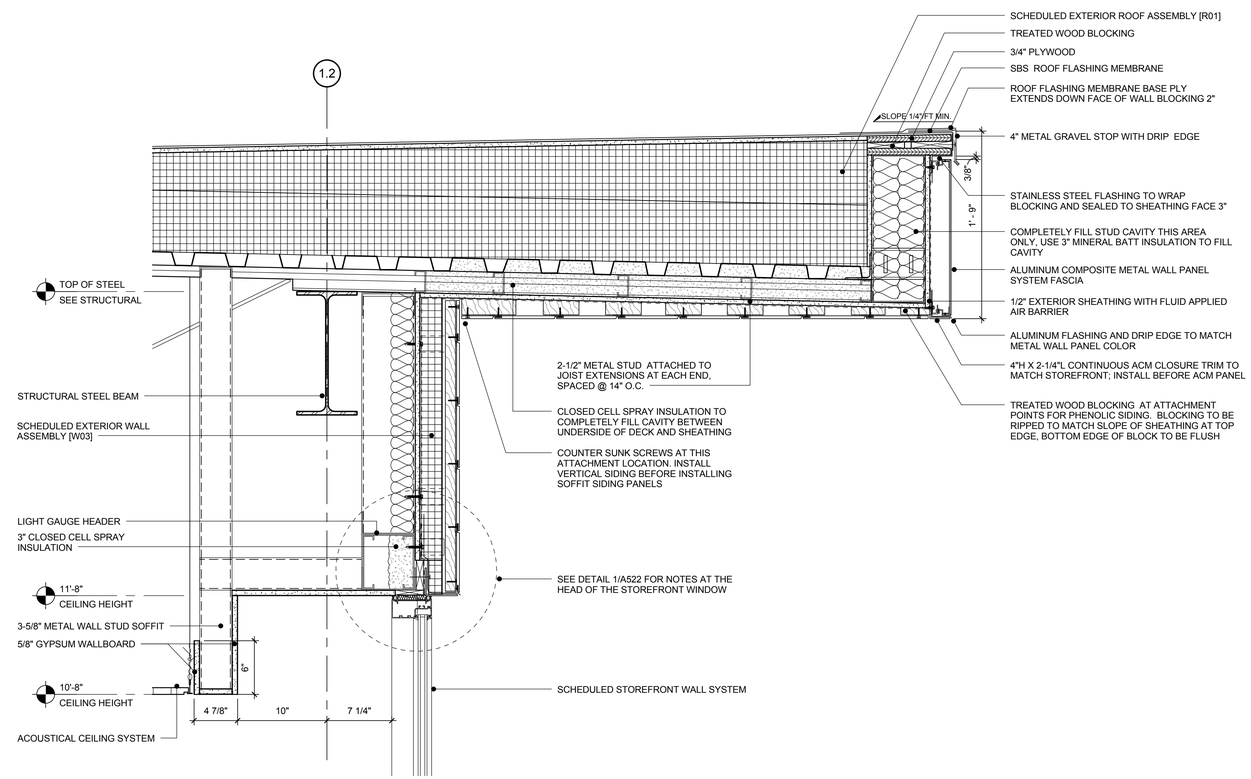

2 PHENOLIC PANEL @ OVERHANG WITH WINDOW

1 1/2" = 1'-0"

CLIENT AND PROJECT

NORTH CAROLINA DEPARTMENT OF TRANSPORTATION

SCO ID NO.: 14-11006-01A

NEW DIVISION 8 OFFICE BUILDING

150 DOT DRIVE
CARTHAGE, NC 28327

DESIGNER

ANDRE JOHNSON ARCHITECT

PO BOX 14637
RALEIGH, NORTH CAROLINA 27620
TELEPHONE: 919.661.6935
MAIL: info@andrejohnsonarchitect.com

© 2016 Andre Johnson Architect, PLLC
Duplication or reproduction by any means without the express written consent of Andre L. Johnson, Architect is a violation of Federal and international law. The information contained on this document is the intellectual property of Andre L. Johnson, Architect and all rights thereto are Reserved. For exceptions, refer to the Owner-Architect Agreement.

CONSULTANT

REGISTRATION

ANDRE L. JOHNSON ARCHITECT, PLLC
52876
NORTH CAROLINA
RALEIGH, NC

ANDRE L. MAR JOHNSON
10528
NORTH CAROLINA
RALEIGH, NC
08/05/16

ISSUE

No.	Date	Description

SHEET INFO

EXTERIOR SECTION DETAILS

A522

PROJECT NO: P1423.00
DATE: AUGUST 5, 2016
BID DOCUMENTS

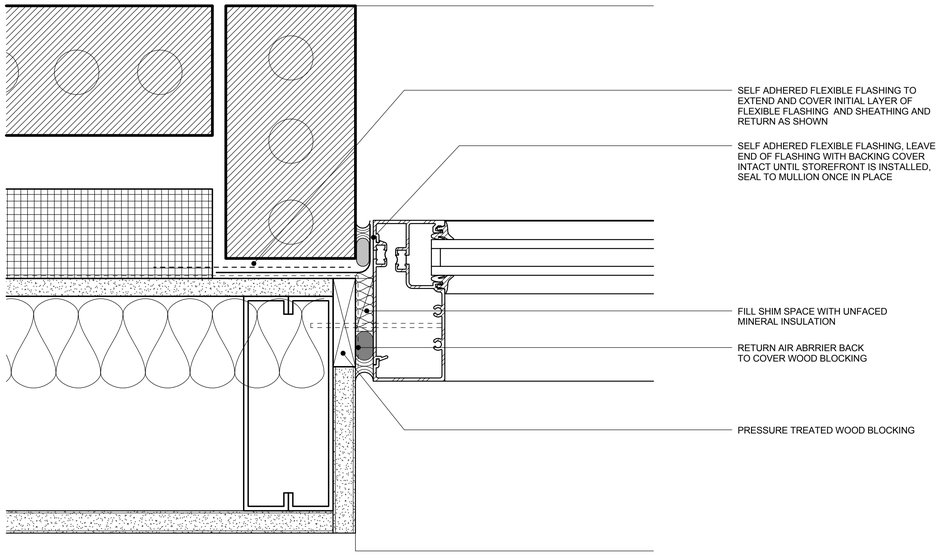

ENLARGED PLAN DETAIL AT ACM AND CURTAINWALL

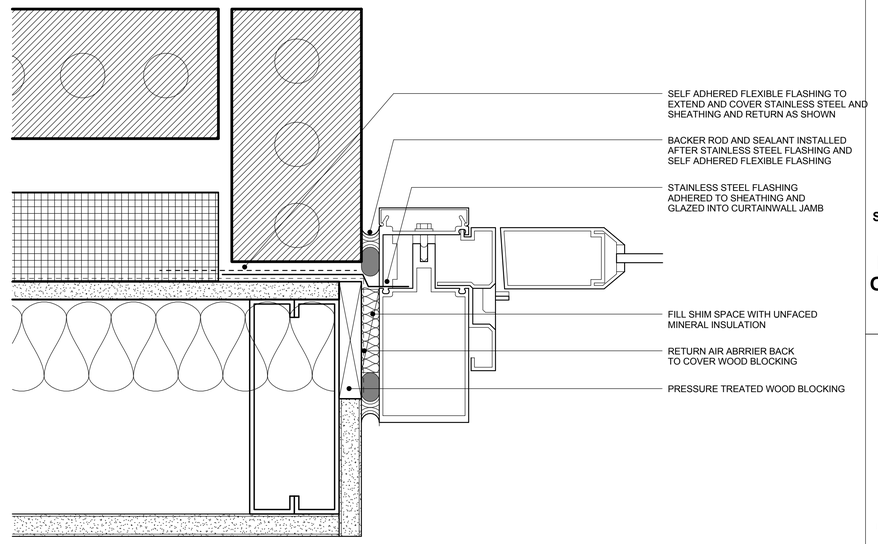

ENLARGED PLAN DETAIL AT BRICK AND CURTAINWALL

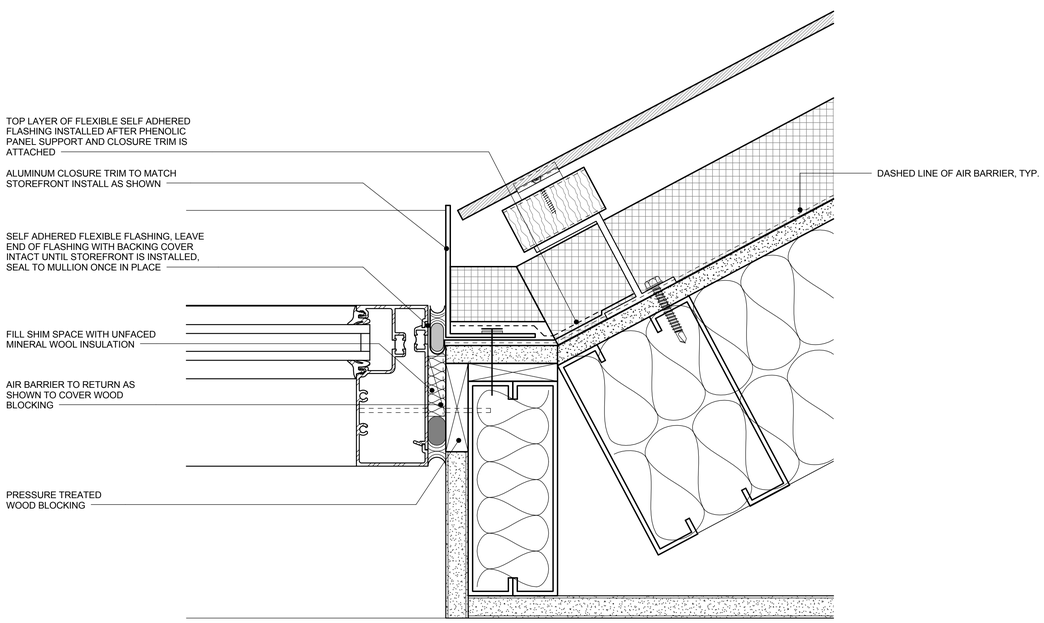

ENLARGED PLAN DETAIL AT PHENOLIC PANEL AND STOREFRONT

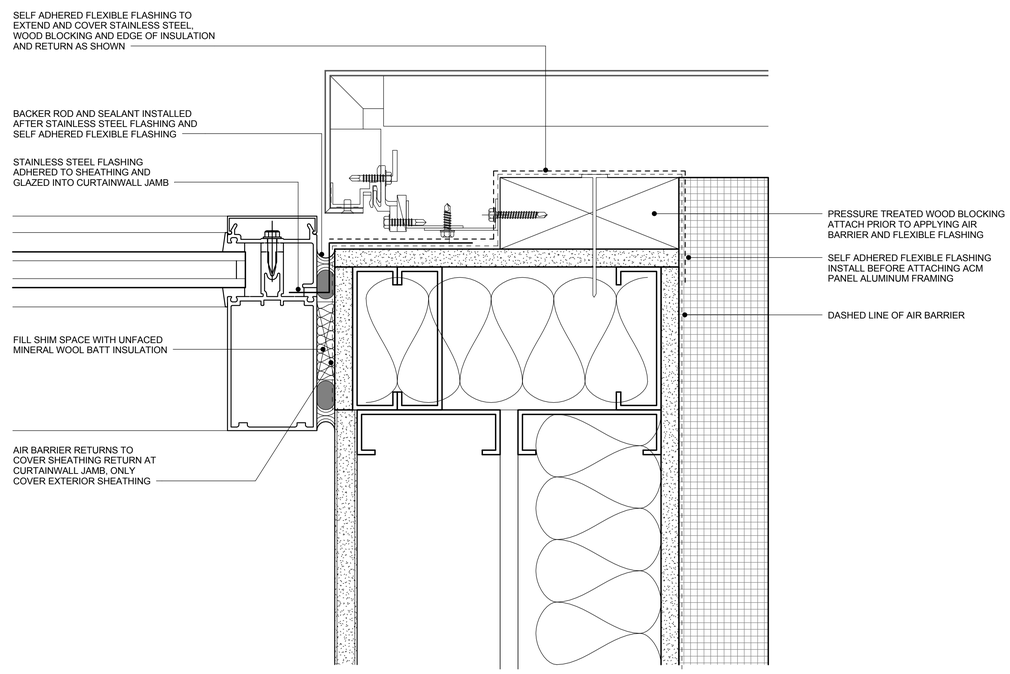

ENLARGED PLAN DETAIL AT ACM AND CURTAINWALL

1 TYPICAL FLASHING DETAILS AT OPENINGS

6" = 1'-0"

CLIENT AND PROJECT

NORTH CAROLINA DEPARTMENT OF TRANSPORTATION

SCO ID NO.: 14-11006-01A

NEW DIVISION 8 OFFICE BUILDING

150 DOT DRIVE
CARTHAGE, NC 28327

DESIGNER

ANDRE JOHNSON ARCHITECT

PO BOX 14637
RALEIGH, NORTH CAROLINA 27620
TELEPHONE: 919.661.6935
MAIL: info@andrejohnsonarchitect.com

© 2016 Andre Johnson Architect, PLLC
Duplication or reproduction by any means without the express written consent of Andre L. Johnson, Architect is a violation of Federal and international law. The information contained on this document is the intellectual property of Andre L. Johnson, Architect and all rights thereto are Reserved. For exceptions, refer to the Owner-Architect Agreement.

CONSULTANT

REGISTRATION

ANDRE JOHNSON ARCHITECT, PLLC
ARCHITECTURAL CORPORATION
52876
NORTH CAROLINA
RALEIGH, NC

ANDRE LAMAR JOHNSON
REGISTERED ARCHITECT
10528
NORTH CAROLINA
RALEIGH, NC
08/05/16

ISSUE

No.	Date	Description

SHEET INFO

ENLARGED TYPICAL JAMB DETAILS

A530

PROJECT NO: P1423.00
DATE: AUGUST 5, 2016
BID DOCUMENTS

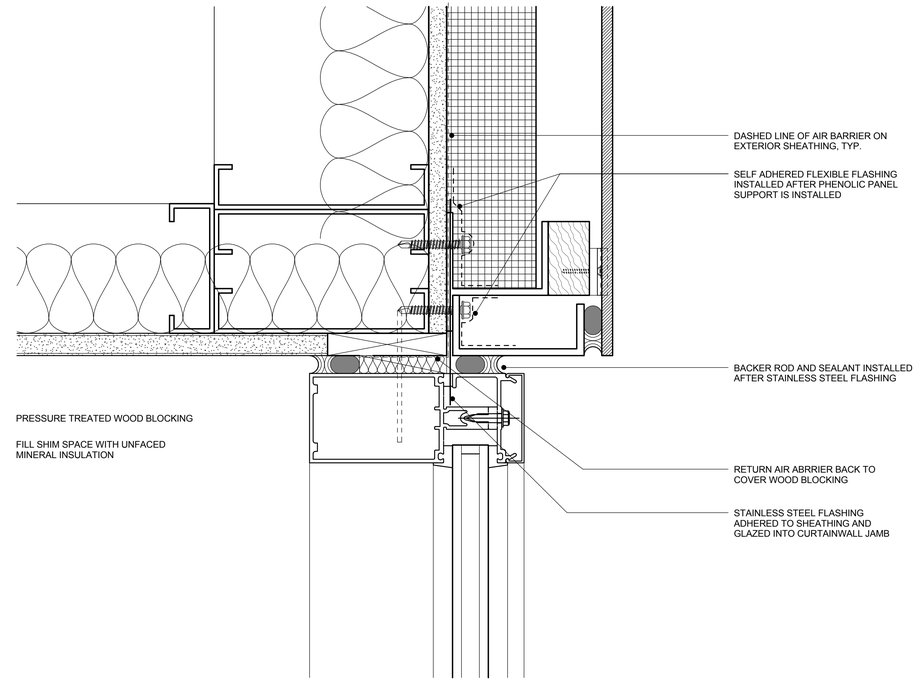

ENLARGED PLAN DETAIL AT PHENOLIC PANEL AND CURTAINWALL

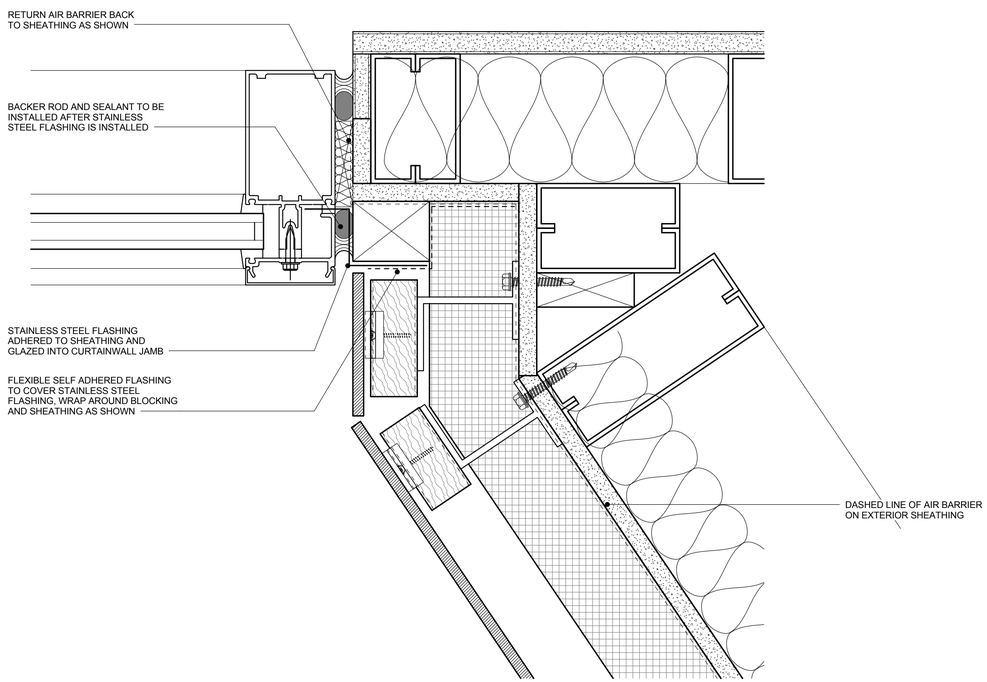

ENLARGED PLAN DETAIL AT PHENOLIC AND CURTAINWALL

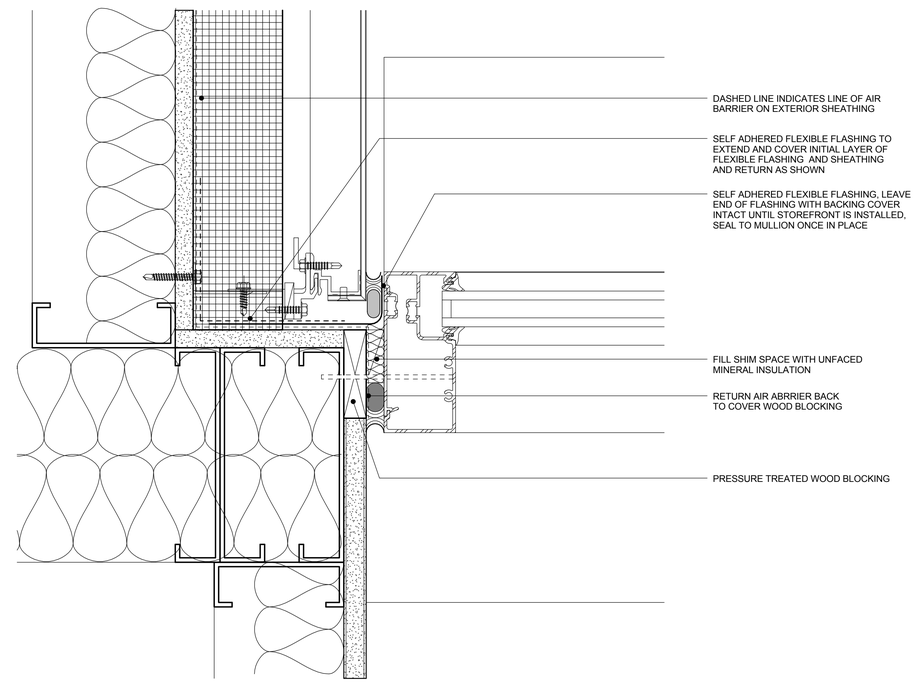

ENLARGED PLAN DETAIL AT ACM AND CURTAINWALL

1 TYPICAL FLASHING DETAILS AT OPENINGS 2

6" = 1'-0"

CLIENT AND PROJECT

NORTH CAROLINA DEPARTMENT OF TRANSPORTATION

SCO ID NO.: 14-11006-01A

NEW DIVISION 8 OFFICE BUILDING

150 DOT DRIVE
CARTHAGE, NC 28327

DESIGNER

ANDRE JOHNSON ARCHITECT

PO BOX 14637
RALEIGH, NORTH CAROLINA 27620
TELEPHONE: 919.661.6935
MAIL: info@andrejohnsonarchitect.com

© 2016 Andre Johnson Architect, PLLC
Duplication or reproduction by any means without the express written consent of Andre L. Johnson, Architect is a violation of Federal and international law. The information contained on this document is the intellectual property of Andre L. Johnson, Architect and all rights thereto are Reserved. For exceptions, refer to the Owner-Architect Agreement.

CONSULTANT

REGISTRATION

ANDRE L. JOHNSON ARCHITECT, PLLC
ARCHITECTURAL CORPORATION
52876
NORTH CAROLINA
RALEIGH, NC

AMAR
JAMAL
JOHNSON
10528
NORTH CAROLINA
RALEIGH, NC

08/05/16

ISSUE

No.	Date	Description

SHEET INFO

ENLARGED TYPICAL JAMB DETAILS

A531

PROJECT NO: P1423.00
DATE: AUGUST 5, 2016
BID DOCUMENTS

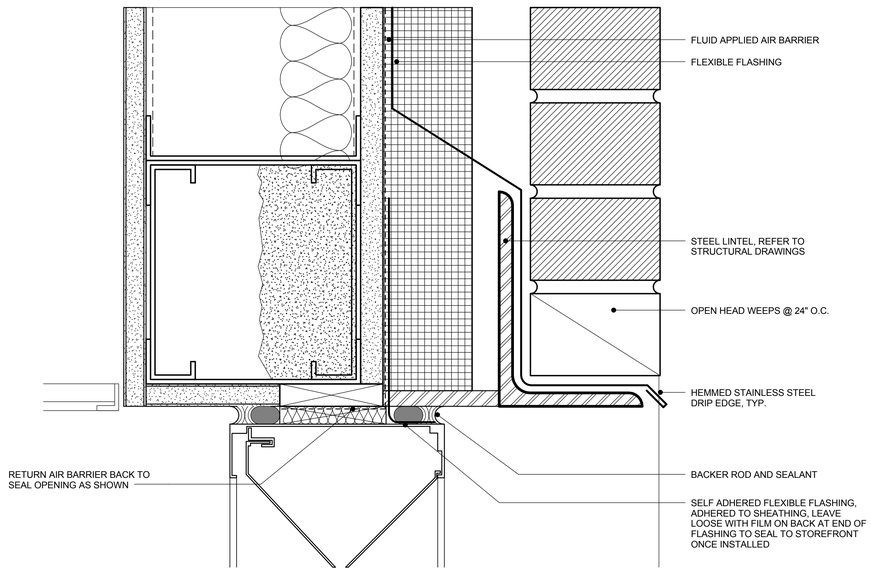

ENLARGED HEAD DETAIL AT BRICK WALL AND LOUVER

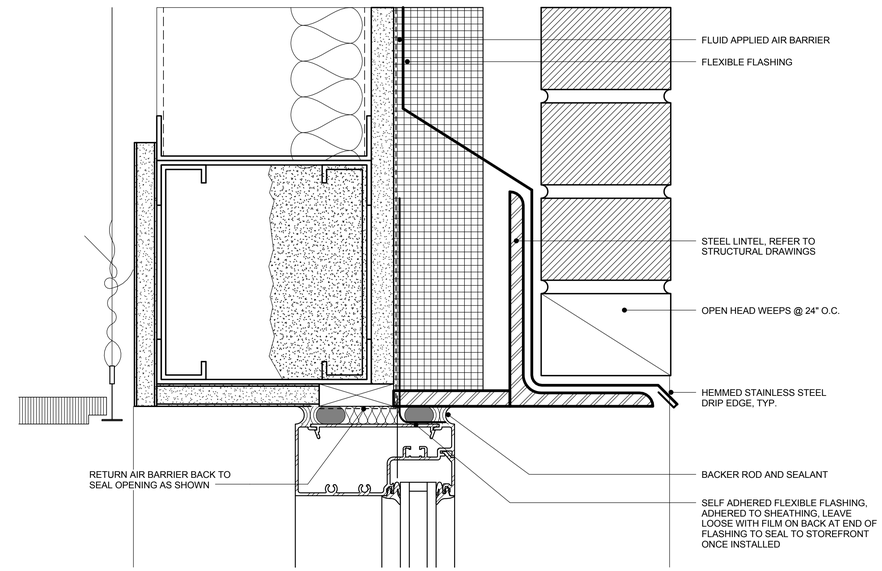

ENLARGED HEAD DETAIL AT BRICK WALL AND STOREFRONT

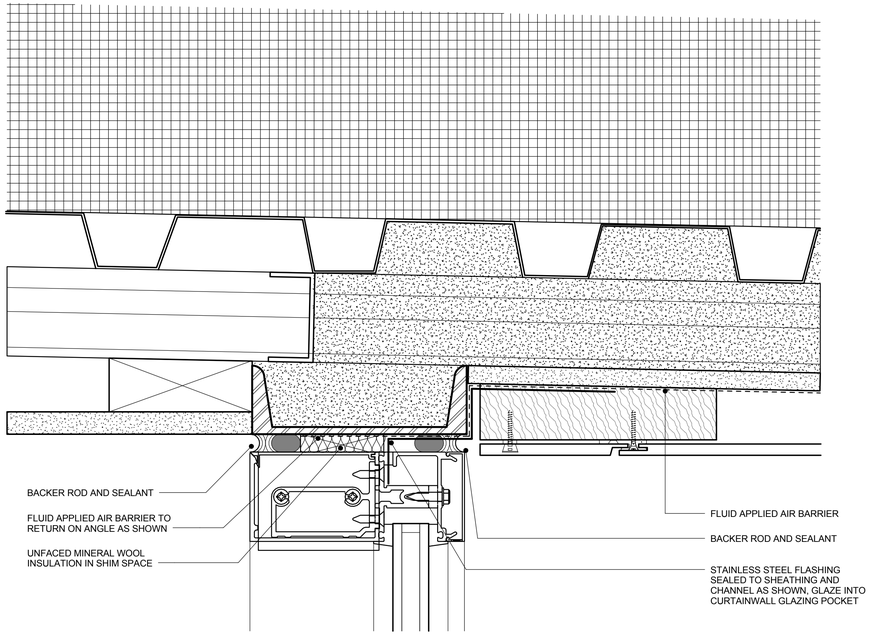

ENLARGED HEAD DETAIL AT PHENOLIC PANEL AND CURTAINWALL

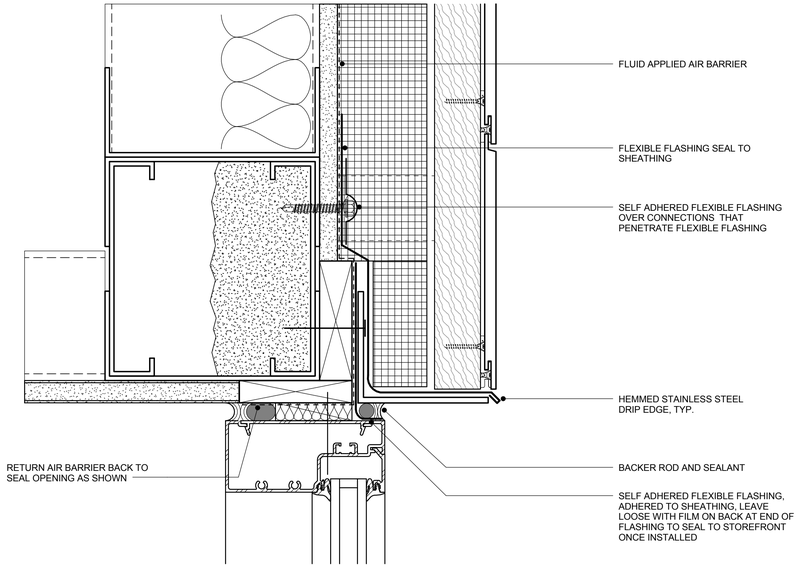

ENLARGED HEAD DETAIL AT PHENOLIC PANEL AND STOREFRONT

1 ENLARGED HEAD AND SILL DETAILS

6" = 1'-0"

CLIENT AND PROJECT

NORTH CAROLINA DEPARTMENT OF TRANSPORTATION

SCO ID NO.: 14-11006-01A

NEW DIVISION 8 OFFICE BUILDING

150 DOT DRIVE
CARTHAGE, NC 28327

DESIGNER

ANDRE JOHNSON ARCHITECT

PO BOX 14637
RALEIGH, NORTH CAROLINA 27620
TELEPHONE: 919.661.6935
MAIL: info@andrejohnsonarchitect.com

© 2016 Andre Johnson Architect, PLLC
Duplication or reproduction by any means without the express written consent of Andre L. Johnson, Architect is a violation of Federal and international law. The information contained on this document is the intellectual property of Andre L. Johnson, Architect and all rights thereto are Reserved. For exceptions, refer to the Owner-Architect Agreement.

CONSULTANT

REGISTRATION

ANDRE JOHNSON ARCHITECT, PLLC
CORPORATE ARCHITECTURAL CERTIFICATE
52876
NORTH CAROLINA
RALEIGH, NC

ANDRE LAMAR JOHNSON
REGISTERED ARCHITECT
10528
NORTH CAROLINA
RALEIGH, NC
08/05/16

ISSUE

No.	Date	Description

SHEET INFO

ENLARGED HEAD DETAILS

A540

PROJECT NO: P1423.00
DATE: AUGUST 5, 2016
BID DOCUMENTS

DOOR & FRAME SCHEDULE

		DOOR							FRAME								
		SIZE										DETAIL					
NO.	DOOR LEAFS	WD	HGT	THK	TYPE	MATERIAL	FINISH	GLAZING	TYPE	MATERIAL	FINISH	JAMB	HEAD	SILL	FIRE RATING	HARDWARE	COMMENTS
101A	SGL-CW	3' - 3"	9' - 0"	0' - 1 3/4"	FG	ALUM	ANOD	SEE ELEV	CW	ALUM	ANOD				N/A	1	
101B	SGL-CW	3' - 3"	9' - 0"	0' - 1 3/4"	FG	ALUM	ANOD	SEE ELEV	CW	ALUM	ANOD				N/A	10	
104	SGL	3' - 0"	7' - 0"	0' - 1 3/4"	F	WD	PT3	NA	A	HM	PT-3	4/A600	3/A600		N/A	6	
105	SGL	3' - 0"	7' - 0"	0' - 1 3/4"	F	WD	PT3	NA	A	HM	PT-3	4/A600	3/A600		N/A	6	
106	SGL	3' - 0"	7' - 0"	0' - 1 3/4"	F	WD	PT3	NA	A	HM	PT-3	4/A600	3/A600		N/A	8	
107A	SGL	3' - 0"	7' - 0"	0' - 1 3/4"	F	WD	PT3	NA	A	HM	PT-3	4/A600	3/A600		N/A	3	
107B	SGL	3' - 0"	7' - 0"	0' - 1 3/4"	F	WD	PT3	NA	A	HM	PT-3	4/A600	3/A600		N/A	3	
108	SGL	3' - 0"	7' - 0"	0' - 1 3/4"	F	WD	PT3	NA	A	HM	PT-3	4/A600	3/A600		N/A	2	SEE ELEVATIONS FOR INFORMATION ON DETAIL 2/A600
109	SGL	3' - 0"	7' - 0"	0' - 1 3/4"	F	WD	PT3	NA	A	HM	PT-3	4/A600	3/A600		N/A	2	SEE ELEVATIONS FOR INFORMATION ON DETAIL 2/A600
110	SGL	3' - 0"	7' - 0"	0' - 1 3/4"	F	WD	PT3	NA	A	HM	PT-3	4/A600	3/A600		N/A	7	
112	SGL	3' - 0"	7' - 0"	0' - 1 3/4"	F	WD	PT3	NA	A	HM	PT-3	4/A600	3/A600		N/A	2	SEE ELEVATIONS FOR INFORMATION ON DETAIL 2/A600
113	SGL	3' - 0"	7' - 0"	0' - 1 3/4"	F	WD	PT3	NA	A	HM	PT-3	4/A600	3/A600		N/A	7	
114	SGL	3' - 0"	7' - 0"	0' - 1 3/4"	F	WD	PT3	NA	A	HM	PT-3	4/A600	3/A600		N/A	2	SEE ELEVATIONS FOR INFORMATION ON DETAIL 2/A600
115	SGL	3' - 0"	7' - 0"	0' - 1 3/4"	FG	WD	PT3	NA	A	HM	PT-3	4/A600	3/A600		N/A	5	SEE ELEVATIONS FOR INFORMATION ON DETAIL 2/A600
116	SGL	3' - 0"	7' - 0"	0' - 1 3/4"	F	WD	PT3	NA	A	HM	PT-3	4/A600	3/A600		N/A	2	
117	SGL	3' - 0"	7' - 0"	0' - 1 3/4"	F	WD	PT3	NA	A	HM	PT-3	4/A600	3/A600		N/A	2	SEE ELEVATIONS FOR INFORMATION ON DETAIL 2/A600
118	SGL	3' - 0"	7' - 0"	0' - 1 3/4"	F	WD	PT3	NA	A	HM	PT-3	4/A600	3/A600		N/A	2	SEE ELEVATIONS FOR INFORMATION ON DETAIL 2/A600
119	SGL	3' - 0"	7' - 0"	0' - 1 3/4"	F	WD	PT3	NA	A	HM	PT-3	4/A600	3/A600		N/A	2	SEE ELEVATIONS FOR INFORMATION ON DETAIL 2/A600
120	SGL	3' - 0"	7' - 0"	0' - 1 3/4"	F	WD	PT3	NA	A	HM	PT-3	4/A600	3/A600		N/A	2	SEE ELEVATIONS FOR INFORMATION ON DETAIL 2/A600
121	SGL	3' - 0"	7' - 0"	0' - 1 3/4"	F	WD	PT3	NA	A	HM	PT-3	4/A600	3/A600		N/A	2	SEE ELEVATIONS FOR INFORMATION ON DETAIL 2/A600
122	SGL	3' - 0"	7' - 0"	0' - 1 3/4"	F	WD	PT3	NA	A	HM	PT-3	4/A600	3/A600		N/A	2	SEE ELEVATIONS FOR INFORMATION ON DETAIL 2/A600
123	SGL	3' - 0"	7' - 0"	0' - 1 3/4"	F	WD	PT3	NA	A	HM	PT-3	4/A600	3/A600		N/A	2	SEE ELEVATIONS FOR INFORMATION ON DETAIL 2/A600
124	SGL	3' - 0"	7' - 0"	0' - 1 3/4"	F	WD	PT3	NA	A	HM	PT-3	4/A600	3/A600		N/A	2	SEE ELEVATIONS FOR INFORMATION ON DETAIL 2/A600
125	SGL	3' - 0"	7' - 0"	0' - 1 3/4"	F	WD	PT3	NA	A	HM	PT-3	4/A600	3/A600		N/A	2	SEE ELEVATIONS FOR INFORMATION ON DETAIL 2/A600
126	SGL	3' - 0"	7' - 0"	0' - 1 3/4"	F	WD	PT3	NA	A	HM	PT-3	4/A600	3/A600		N/A	11	
127	SGL	3' - 0"	7' - 0"	0' - 1 3/4"	F	WD	PT3	NA	A	HM	PT-3	4/A600	3/A600		N/A	2	SEE ELEVATIONS FOR INFORMATION ON DETAIL 2/A600
128	SGL	3' - 0"	7' - 0"	0' - 1 3/4"	F	WD	PT3	NA	A	HM	PT-3	4/A600	3/A600		N/A	2	SEE ELEVATIONS FOR INFORMATION ON DETAIL 2/A600
129	SGL-CW	3' - 0"	9' - 0"	0' - 1 3/4"	FG	ALUM	ANOD	NA	CW	ALUM	ANOD				N/A	10	
130A	SGL	3' - 0"	7' - 0"	0' - 1 3/4"	FG	WD	PT3	NA	A	HM	PT-3	4/A600	3/A600		N/A	4	
130B	SGL	3' - 0"	7' - 0"	0' - 1 3/4"	FG	WD	PT3	NA	A	HM	PT-3	4/A600	3/A600		N/A	4	
131	SGL	3' - 0"	7' - 0"	0' - 1 3/4"	F	WD	PT3	NA	A	HM	PT-3	4/A600	3/A600		N/A	2	
132	SGL	3' - 0"	7' - 0"	0' - 1 3/4"	F	WD	PT3	NA	A	HM	PT-3	4/A600	3/A600		N/A	2	SEE ELEVATIONS FOR INFORMATION ON DETAIL 2/A600
133	SGL	3' - 0"	7' - 0"	0' - 1 3/4"	F	WD	PT3	NA	A	HM	PT-3	4/A600	3/A600		N/A	2	SEE ELEVATIONS FOR INFORMATION ON DETAIL 2/A600
134	SGL	3' - 0"	7' - 0"	0' - 1 3/4"	F	WD	PT3	NA	A	HM	PT-3	4/A600	3/A600		N/A	2	SEE ELEVATIONS FOR INFORMATION ON DETAIL 2/A600
135	SGL	3' - 0"	7' - 0"	0' - 1 3/4"	F	WD	PT3	NA	A	HM	PT-3	4/A600	3/A600		N/A	2	SEE ELEVATIONS FOR INFORMATION ON DETAIL 2/A600
137A	SGL	3' - 0"	7' - 0"	0' - 1 3/4"	F	WD	PT3	NA	A	HM	PT-3	4/A600	3/A600		N/A	2	SEE ELEVATIONS FOR INFORMATION ON DETAIL 2/A600
137B	SGL	3' - 0"	7' - 0"	0' - 1 3/4"	F	WD	PT3	NA	A	HM	PT-3	4/A600	3/A600		N/A	2	SEE ELEVATIONS FOR INFORMATION ON DETAIL 2/A600
138	SGL	3' - 0"	7' - 0"	0' - 1 3/4"	F	WD	PT3	NA	A	HM	PT-3	4/A600	3/A600		N/A	2	
139	SGL	3' - 0"	7' - 0"	0' - 1 3/4"	F	WD	PT3	NA	A	HM	PT-3	4/A600	3/A600		N/A	2	SEE ELEVATIONS FOR INFORMATION ON DETAIL 2/A600
140	SGL	3' - 0"	7' - 0"	0' - 1 3/4"	F	WD	PT3	NA	A	HM	PT-3	4/A600	3/A600		N/A	2	SEE ELEVATIONS FOR INFORMATION ON DETAIL 2/A600
141	SGL	3' - 0"	7' - 0"	0' - 1 3/4"	F	WD	PT3	NA	A	HM	PT-3	4/A600	3/A600		N/A	2	SEE ELEVATIONS FOR INFORMATION ON DETAIL 2/A600
142	SGL	3' - 0"	7' - 0"	0' - 1 3/4"	F	WD	PT3	NA	A	HM	PT-3	4/A600	3/A600		N/A	2	SEE ELEVATIONS FOR INFORMATION ON DETAIL 2/A600
143	SGL	3' - 0"	7' - 0"	0' - 1 3/4"	F	WD	PT3	NA	A	HM	PT-3	4/A600	3/A600		N/A	2	SEE ELEVATIONS FOR INFORMATION ON DETAIL 2/A600
144	SGL	3' - 0"	7' - 0"	0' - 1 3/4"	F	WD	PT3	NA	A	HM	PT-3	4/A600	3/A600		N/A	2	SEE ELEVATIONS FOR INFORMATION ON DETAIL 2/A600
145	SGL	3' - 0"	7' - 0"	0' - 1 3/4"	F	WD	PT3	NA	A	HM	PT-3	4/A600	3/A600		N/A	2	SEE ELEVATIONS FOR INFORMATION ON DETAIL 2/A600
146	SGL	3' - 0"	7' - 0"	0' - 1 3/4"	F	WD	PT3	NA	A	HM	PT-3	4/A600	3/A600		N/A	2	SEE ELEVATIONS FOR INFORMATION ON DETAIL 2/A600
147A	SGL	3' - 0"	7' - 0"	0' - 1 3/4"	F	WD	PT3	NA	A	HM	PT-3	4/A600	3/A600		N/A	7	
147B	DBL	6' - 0"	9' - 0"	0' - 1 3/4"	F	HM	PT-4	NA	A	HM	PT-4				N/A	9	
C100	SGL-CW	3' - 1"	9' - 0"	0' - 1 3/4"	FG	ALUM	ANOD	SEE ELEV	CW	ALUM	ANOD				N/A	1	
C101	SGL	3' - 0"	7' - 0"	0' - 1 3/4"	FG	WD	PT3	NA	A	HM	PT-3	4/A600	3/A600		N/A	4	
C102	SGL-CW	3' - 0"	9' - 0"	0' - 1 3/4"	FG	ALUM	ANOD	SEE ELEV	CW	ALUM	ANOD				N/A	1	
C103	SGL	3' - 0"	7' - 0"	0' - 1 3/4"	FG	WD	PT3	NA	A	HM	PT-3	4/A600	3/A600		N/A	4	
C104	SGL	3' - 0"	7' - 0"	0' - 1 3/4"	FG	WD	PT3	NA	A	HM	PT-3	4/A600	3/A600		N/A	4	
C105	SGL-CW	3' - 0"	9' - 0"	0' - 1 3/4"	FG	ALUM	ANOD	SEE ELEV	CW	ALUM	ANOD				N/A	1	
C106	SGL	3' - 0"	7' - 0"	0' - 1 3/4"	FG	WD	PT3	NA	A	HM	PT-3	4/A600	3/A600		N/A	4	

GENERAL NOTES

A. ALL DIMENSIONS ARE TO FINISH WALL SURFACE, UNLESS NOTED OTHERWISE OR INDICATED.
B. THE GENERAL CONTRACTOR SHALL VERIFY ALL THROAT DIMENSIONS PRIOR TO DOOR FRAME FABRICATION.
C. REFER TO STRUCTURAL DRAWINGS FOR STRUCTURAL GRID DIMENSIONS.
D. THE GENERAL CONTRACTOR SHALL FIELD VERIFY ALL DIMENSIONS & REPORT ANY DISCREPANCIES TO THE ARCHITECT.
E. PROVIDE 1/2" WIDE SEALANT BETWEEN WINDOW / DOOR FRAMES AND ADJACENT SURFACES U.N.O.

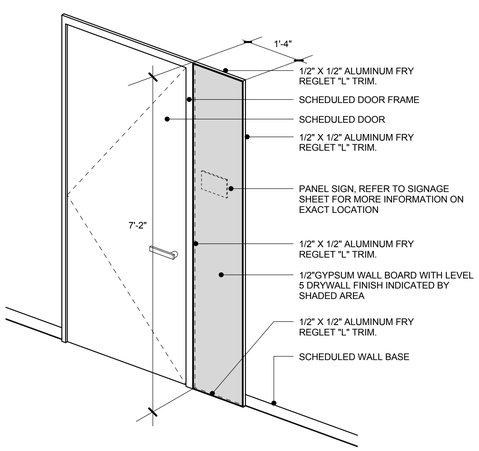

1 INTERIOR DOOR DETAIL
1/2" = 1'-0"

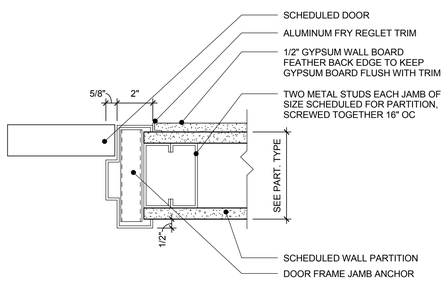

2 HM FRAME WITH SPECIALTY DETAIL
3" = 1'-0"

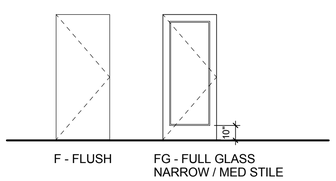

5 DOOR TYPE ELEVATIONS
1/4" = 1'-0"

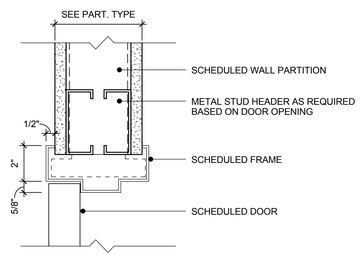

3 HM FRAME INTERIOR DOOR HEAD
3" = 1'-0"

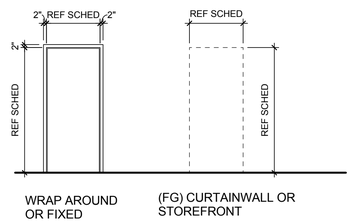

6 DOOR AND FRAME ELEVATIONS
1/4" = 1'-0"

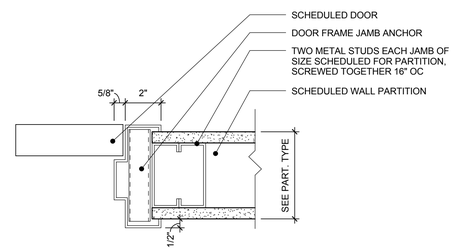

4 HM FRAME INTERIOR DOOR JAMB
3" = 1'-0"

CLIENT AND PROJECT

NORTH CAROLINA DEPARTMENT OF TRANSPORTATION

SCO ID NO.: 14-11006-01A

NEW DIVISION 8 OFFICE BUILDING

150 DOT DRIVE
CARTHAGE, NC 28327

DESIGNER

ANDRE JOHNSON ARCHITECT

PO BOX 14637
RALEIGH, NORTH CAROLINA 27620
TELEPHONE: 919.661.6935
MAIL: info@andrejohnsonarchitect.com

© 2016 Andre Johnson Architect, PLLC
Duplication or reproduction by any means without the express written consent of Andre L. Johnson, Architect is a violation of Federal and international law. The information contained on this document is the intellectual property of Andre L. Johnson, Architect and all rights thereto are Reserved. For exceptions, refer to the Owner-Architect Agreement.

CONSULTANT

REGISTRATION

ANDRE JOHNSON ARCHITECT, PLLC
CORPORATE ARCHITECTURAL CERTIFICATE
52876
NORTH CAROLINA
RALEIGH, NC

ANDRE LAMAR JOHNSON
10528
NORTH CAROLINA
RALEIGH, NC
08/05/16

ISSUE

No.	Date	Description

SHEET INFO

DOOR & FRAME ELEVATION, DETAILS & SCHEDULE

A600

PROJECT NO: P1423.00
DATE: AUGUST 5, 2016
BID DOCUMENTS

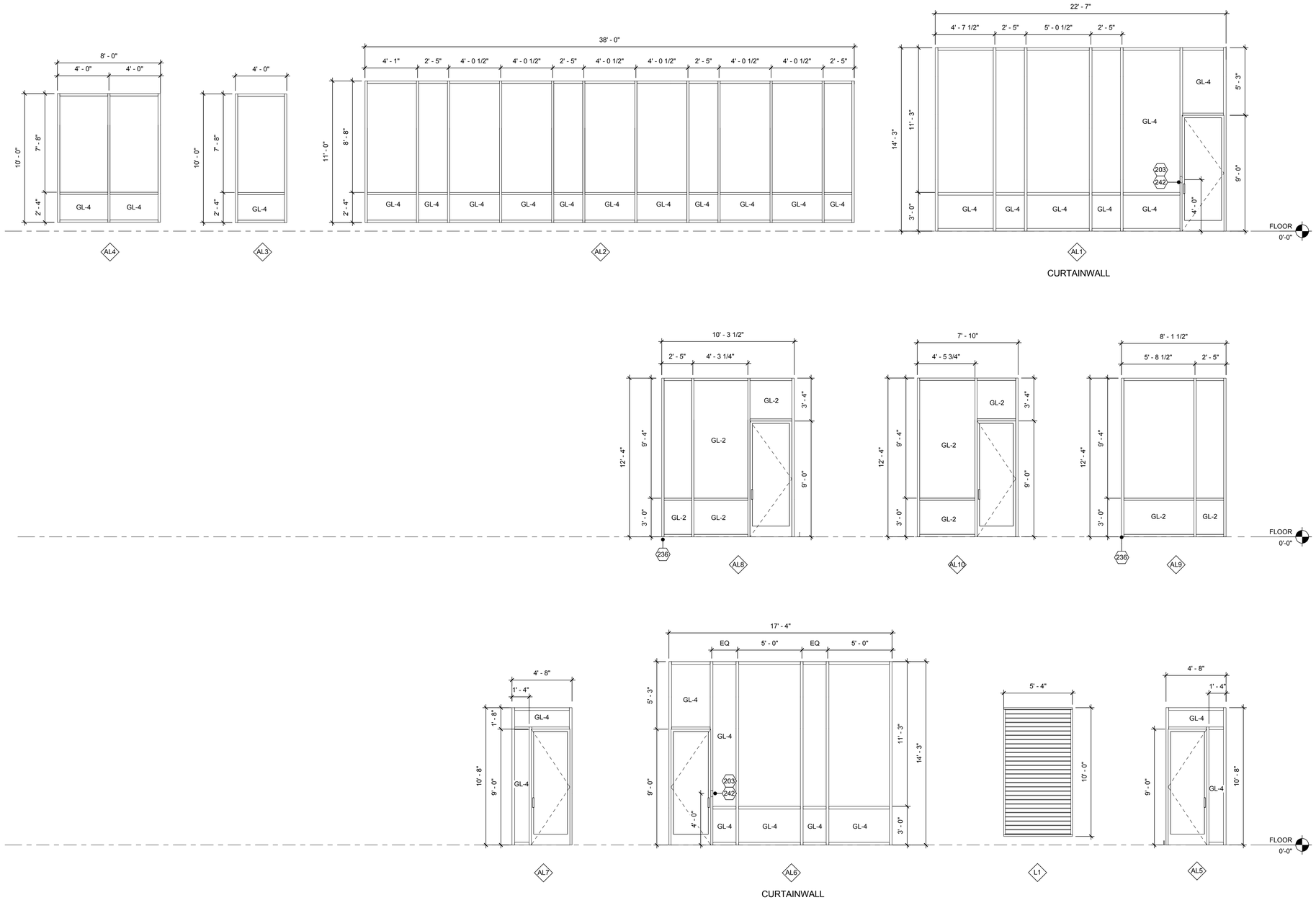

GENERAL NOTES

A. ALL EXTERIOR GLAZING SHALL BE AS SPECIFIED IN SECTION 088000.
B. THE GENERAL CONTRACTOR SHALL BE RESPONSIBLE TO VERIFY ALL ROUGH OPENING DIMENSIONS PRIOR TO CURTAINWALL, DOOR AND LOUVER FABRICATION.
C. ALL DIMENSIONS FOR LOUVERS ARE OUTSIDE DIMENSIONS U.N.O.
D. THE GENERAL CONTRACTOR SHALL BE RESPONSIBLE FOR COORDIANTING METAL WALL LOUVER VERTICAL FRAMING MEMBERS FOR VERTICAL SUPPORT.
E. REFER TO SPECIFICATION DIVISION 08 FOR MORE INFORMATION ON THE EXTERIOR STOREFRONT AND CURTAINWALL SYSTEMS.
F. REFER TO SPECIFICATION DIVISION 08 FOR MORE INFORMATION ON THE INTERIOR STOREFRONT SYSTEM.
G. ALL EXTERIOR GLAZING IS GLAZING TYPE 3 (GL-3) UNLESS NOTED OTHERWISE.
H. ALL INTERIOR GLAZING IS GLAZING TYPE 1 (GL-1) UNLESS NOTED OTHERWISE.
I. ALL GLASS DOORS INDICATED SHALL HAVE TEMPERED GLAZING AS INDICATED.

SHEET KEYNOTES

203 CARD READER (NIC) INSTALLED ON MULLION INSTALLED NOT MORE THAN 4'-0" O.C.

236 REFER TO DETAIL 2/A513 FOR CORNER MULLION DIMENSION AND CONSTRUCTION

242 CURTAINWALL / STOREFRONT MANUFACTURER TO PREPARE MULLION FOR THE INSTALLATION OF FUTURE CARD READER BY OWNER (N.I.C.). MANUFACTURER TO PROVIDE PATHWAY FOR ALL WIRING FOR DOOR POSITION SWITCH AND CARD READER

CLIENT AND PROJECT

NORTH CAROLINA DEPARTMENT OF TRANSPORTATION

SCO ID NO.: 14-11006-01A

NEW DIVISION 8 OFFICE BUILDING

150 DOT DRIVE
CARTHAGE, NC 28327

DESIGNER

ANDRE JOHNSON ARCHITECT

PO BOX 14637
RALEIGH, NORTH CAROLINA 27620
TELEPHONE: 919.661.6935
MAIL: info@andrejohnsonarchitect.com

© 2016 Andre Johnson Architect, PLLC
Duplication or reproduction by any means without the express written consent of Andre L. Johnson, Architect is a violation of Federal and international law. The information contained on this document is the intellectual property of Andre L. Johnson, Architect and all rights thereto are Reserved. For exceptions, refer to the Owner-Architect Agreement.

CONSULTANT

REGISTRATION

ANDRE L. JOHNSON ARCHITECT PLLC
ARCHITECTURAL CORPORATION
52876
NORTH CAROLINA
RALEIGH, NC

ANDRE L. AMAR JOHNSON
ARCHITECT
10528
NORTH CAROLINA
RALEIGH, NC
08/05/16

ISSUE

No.	Date	Description

SHEET INFO

CURTAINWALL & LOUVER FRAME ELEVATIONS

A601

PROJECT NO: P1423.00
DATE: AUGUST 5, 2016
BID DOCUMENTS

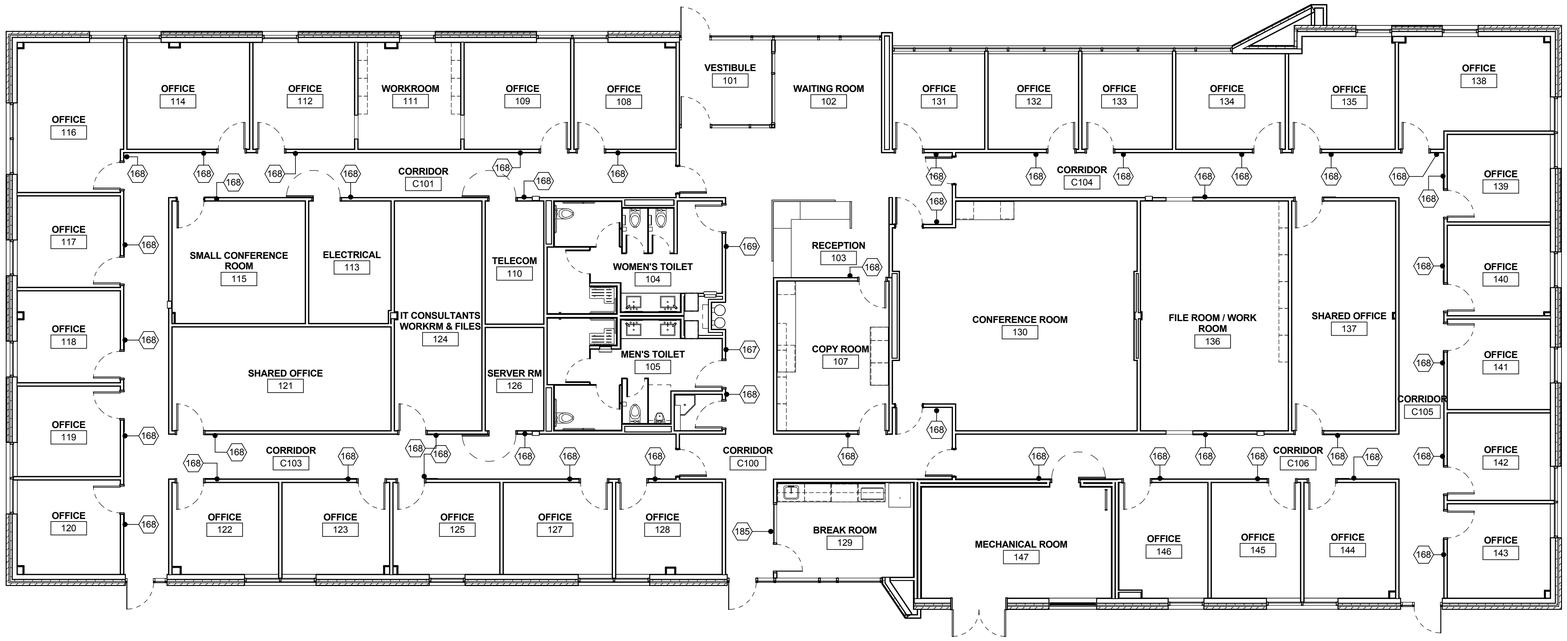

1 INTERIOR SIGNAGE PLAN

1/8" = 1'-0"

PLAN NORTH

SIGNAGE SCHEDULE			
ROOM NUMBER AND SIGN NUMBER	ROOM NAME	SIGN TYPE	SIGNAGE TEXT
101	VESTIBULE	NO SIGN REQ'D	
102	WAITING ROOM	NO SIGN REQ'D	
103	RECEPTION	NO SIGN REQ'D	
104	WOMEN'S TOILET	ST-3	WOMEN
105	MEN'S TOILET	ST-1	MEN
106	JAN. CLO.	ST-2	JANITOR
107	COPY ROOM	ST-2	COPY ROOM
108	OFFICE	ST-2	OFFICE
109	OFFICE	ST-2	OFFICE
110	TELECOM	ST-2	TELECOM
111	WORKROOM	ST-2	WORKROOM
112	OFFICE	ST-2	OFFICE
113	ELECTRICAL	ST-2	ELECTRICAL
114	OFFICE	ST-2	OFFICE
115	SMALL CONFERENCE ROOM	ST-2	CONFERENCE
116	OFFICE	ST-2	OFFICE
117	OFFICE	ST-2	OFFICE
118	OFFICE	ST-2	OFFICE
119	OFFICE	ST-2	OFFICE
120	OFFICE	ST-2	OFFICE
121	SHARED OFFICE	ST-2	OFFICE
122	OFFICE	ST-2	OFFICE
123	OFFICE	ST-2	OFFICE
124	IT CONSULTANTS WORKRM & FILES	ST-2	WORKROOM
125	OFFICE	ST-2	OFFICE
126	SERVER RM	ST-2	SERVER ROOM
127	OFFICE	ST-2	OFFICE
128	OFFICE	ST-2	OFFICE
129	BREAK ROOM	ST-2	BREAKROOM
130	CONFERENCE ROOM	ST-2	CONFERENCE
131	OFFICE	ST-2	OFFICE
132	OFFICE	ST-2	OFFICE
133	OFFICE	ST-2	OFFICE
134	OFFICE	ST-2	OFFICE
135	OFFICE	ST-2	OFFICE
136	FILE ROOM / WORK ROOM	ST-2	FILE ROOM
137	SHARED OFFICE	ST-2	OFFICE
138	OFFICE	ST-2	OFFICE
139	OFFICE	ST-2	OFFICE
140	OFFICE	ST-2	OFFICE
141	OFFICE	ST-2	OFFICE
142	OFFICE	ST-2	OFFICE
143	OFFICE	ST-2	OFFICE
144	OFFICE	ST-2	OFFICE
145	OFFICE	ST-2	OFFICE
146	OFFICE	ST-2	OFFICE
147	MECHANICAL ROOM	ST-2	MECHANICAL
C100	CORRIDOR	NO SIGN REQ'D	
C101	CORRIDOR	NO SIGN REQ'D	
C102	CORRIDOR	NO SIGN REQ'D	
C103	CORRIDOR	NO SIGN REQ'D	
C104	CORRIDOR	NO SIGN REQ'D	
C105	CORRIDOR	NO SIGN REQ'D	
C106	CORRIDOR	NO SIGN REQ'D	

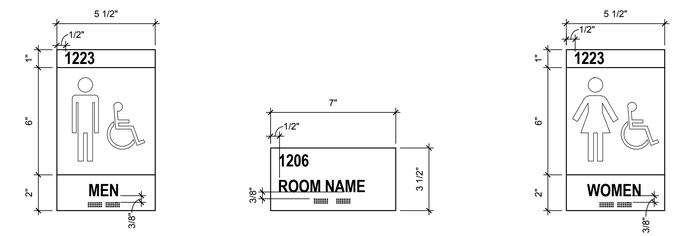

SIGN TYPE 1 SIGN TYPE 2 SIGN TYPE 3

2 INTERIOR SIGNAGE

3" = 1'-0"

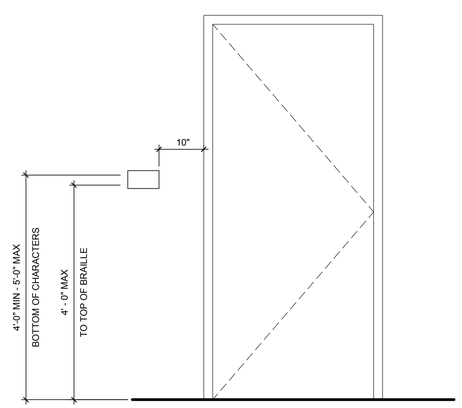

3 TYPICAL SIGNAGE LOCATION

3/4" = 1'-0"

GENERAL NOTES

A. LOCATION OF SIGNAGE INDICATED ON THE PLAN IS NOT EXACT AND SHALL BE COORDINATED IN THE FIELD BY THE GENERAL CONTRACTOR.
B. THE GENERAL CONTRACTOR SHALL PROVIDE ALL BLOCKING REQUIRED TO INSTALL SIGNAGE INDICATED IF REQUIRED BY THE SPECIFICATIONS OR SIGNAGE MANUFACTURER.
C. THE GENERAL CONTRACTOR SHALL BE RESPONSIBLE FOR THE INSTALLATION OF THE SIGNAGE PER THE 2012 NORTH CAROLINA STATE BUILDING OR THE LOCAL AUTHORITY HAVING JURISDICTION.
D. ALL CHARACTERS SHALL BE ARIAL FONT OF SIZE INDICATED ON THIS SHEET. WHERE SELECTED MANUFACTURER STANDARD VARIES, CONTRACTOR SHALL CONFIRM WITH ARCHITECT PRIOR TO PURCHASE.

SHEET KEYNOTES

167 SIGN TYPE 1
168 SIGN TYPE 2
169 SIGN TYPE 3
185 SIGN TYPE 2 WITH MATCHING BACKPLATE MOUNTED TO OPPOSITE SIDE OF GLASS

WALL TYPE LEGEND

3A WALL TYPE SYMBOL - REFER TO SHEET A500-A502 FOR WALL TYPE CONSTRUCTION & RATINGS
NEW UNRATED STUD WALL
NEW UNRATED MASONRY WALL

CLIENT AND PROJECT

STATE OF NORTH CAROLINA DEPARTMENT OF TRANSPORTATION

NORTH CAROLINA DEPARTMENT OF TRANSPORTATION

SCO ID NO.: 14-11006-01A

NEW DIVISION 8 OFFICE BUILDING

150 DOT DRIVE
CARTHAGE, NC 28327

DESIGNER

ANDRE JOHNSON ARCHITECT
PO BOX 14637
RALEIGH, NORTH CAROLINA 27620
TELEPHONE: 919.661.6935
MAIL: info@andrejohnsonarchitect.com

© 2016 Andre Johnson Architect, PLLC
Duplication or reproduction by any means without the express written consent of Andre L. Johnson, Architect is a violation of Federal and international law. The information contained on this document is the intellectual property of Andre L. Johnson, Architect and all rights thereto are Reserved. For exceptions, refer to the Owner-Architect Agreement.

CONSULTANT

REGISTRATION

ANDRE JOHNSON ARCHITECT PLLC
ARCHITECTURAL CORPORATION
52876
NORTH CAROLINA
RALEIGH, NC

ANDRE LAMAR JOHNSON
REGISTERED ARCHITECT
10528
NORTH CAROLINA
RALEIGH, NC
08/05/16

ISSUE

No.	Date	Description

SHEET INFO

INTERIOR SIGNAGE DRAWINGS & SCHEDULE

A700

PROJECT NO: P1423.00
DATE: AUGUST 5, 2016
BID DOCUMENTS

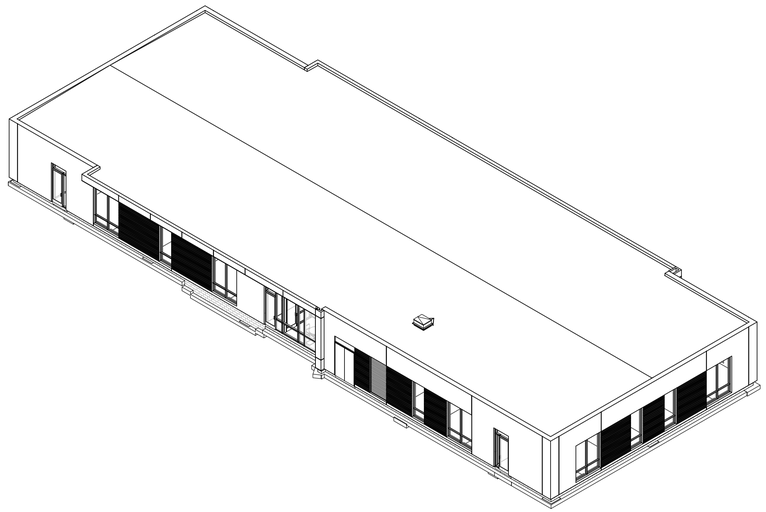

1 OVERALL BUILDING ISOMETRIC - SOUTHEAST

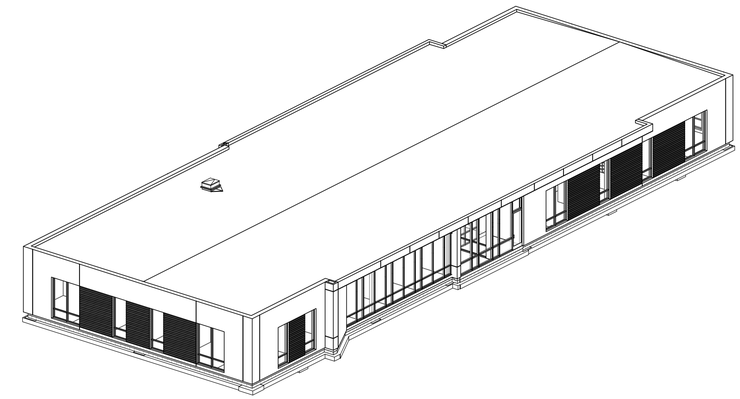

6 OVERALL BUILDING ISOMETRIC - NORTHEAST

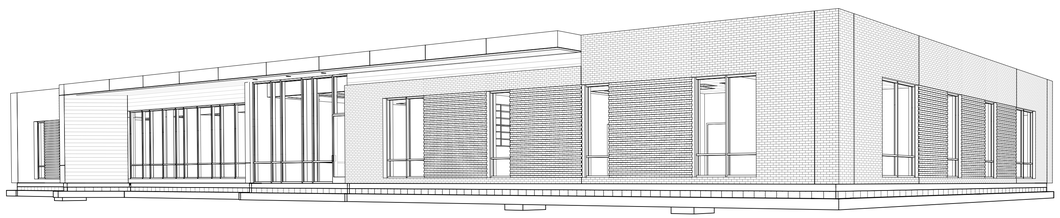

2 NORTHWEST PERSPECTIVE

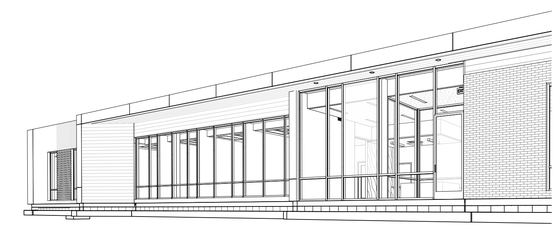

4 NORTH ENTRY PERSPECTIVE

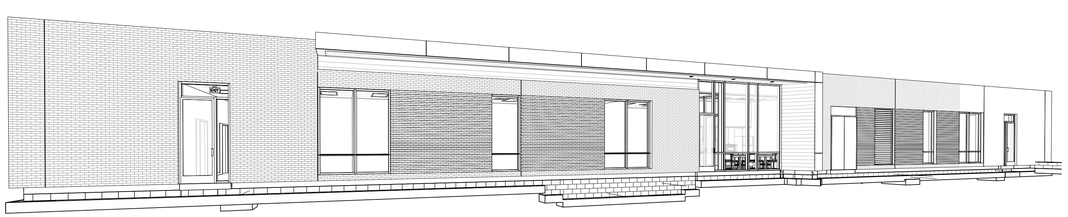

3 SOUTHWEST PERSPECTIVE

5 SOUTH ENTRY PERSPECTIVE

CLIENT AND PROJECT

NORTH CAROLINA DEPARTMENT OF TRANSPORTATION

SCO ID NO.: 14-11006-01A

NEW DIVISION 8 OFFICE BUILDING

150 DOT DRIVE
CARTHAGE, NC 28327

DESIGNER

ANDRE JOHNSON ARCHITECT

PO BOX 14637
RALEIGH, NORTH CAROLINA 27620
TELEPHONE: 919.661.6935
MAIL: info@andrejohnsonarchitect.com

© 2016 Andre Johnson Architect, PLLC
Duplication or reproduction by any means without the express written consent of Andre L. Johnson, Architect is a violation of Federal and international law. The information contained on this document is the intellectual property of Andre L. Johnson, Architect and all rights thereto are Reserved. For exceptions, refer to the Owner-Architect Agreement.

CONSULTANT

REGISTRATION

ANDRE JOHNSON ARCHITECT PLLC
CORPORATE ARCHITECTURAL CERTIFICATION
52876
NORTH CAROLINA
RALEIGH, NC

ANDRE LAMAR JOHNSON
ARCHITECTURAL CERTIFICATION
10528
NORTH CAROLINA
RALEIGH, NC
08/05/16

ISSUE

No.	Date	Description

SHEET INFO

3D EXTERIOR REFERENCE VIEWS

A900

PROJECT NO: P1423.00
DATE: AUGUST 5, 2016
BID DOCUMENTS

PLUMBING GENERAL NOTES

1 ALL PLUMBING WORK SHALL BE IN ACCORDANCE WITH INTERNATIONAL PLUMBING CODE (IPC) CURRENTLY ADOPTED BY THE AUTHORITY HAVING JURISDICTION.

2 PLUMBING VENT PIPING SHOWN IS ONLY FOR DIAGRAMMATIC PURPOSES. COORDINATE VENT THROUGH ROOF LOCATION WITH HVAC AIR INTAKES.

3 ALL VALVES ABOVE CEILINGS AND IN CONCEALED SPACES SHALL BE LABELED AT CEILING TILE WITH METAL CEILING TACKS INDICATING VALVE # AND TYPE OF WATER. (i.e.; BLUE=COLD WATER, LETTERING CW VLV1-001).

4 PROVIDE WATER HAMMER ARRESTORS IN ALL HW AND CW SUPPLY PIPING AS SHOWN ON WATER RISERS. INSTALL IN ACCORDANCE WITH PDI-WH201 STANDARDS. AIR CHAMBERS ARE NOT ACCEPTABLE SUBSTITUTIONS.

5 PROVIDE THERMAL INSULATION FOR HOT WATER, HOT WATER RETURN AND COLD WATER PIPING IN ACCORDANCE WITH THE ENERGY EFFICIENCY CODE FOR BUILDING CONSTRUCTION AND PER SPECIFICATIONS.

6 PROVIDE CLEANOUTS AT THE BASE OF EACH SANITARY STACK IN ACCORDANCE WITH INTERNATIONAL PLUMBING CODE (IPC) CURRENTLY ADOPTED BY THE AUTHORITY HAVING JURISDICTION. CLEANOUTS SHALL BE SIZED TO MATCH THE PIPING BEING SERVED. FLOOR CLEANOUTS SHALL BE SPACED AT 75'-0" MAX. ALSO PROVIDE CLEANOUTS IN HORIZONTAL CHANGE OF DIRECTIONS >45°.

7 THE MANUFACTURERS OF ALL EQUIPMENT SHOWN ARE THE BASIS OF DESIGN. SEE SPECIFICATIONS FOR OTHER ACCEPTABLE MANUFACTURERS.

8 FIRE CAULK AND SLEEVE ALL PENETRATIONS THROUGH FIRE RATED ASSEMBLIES. REFER TO LIFE SAFETY PLANS FOR RATED ASSEMBLY LOCATIONS. REFER TO THE ARCHITECTURAL SHEET FOR WALL DETAILS AND UL ASSEMBLY NUMBERS.

9 COORDINATE UNDERGROUND PIPING INVERT ELEVATIONS WITH STRUCTURAL FOOTING ELEVATIONS AND CIVIL INVERT CONNECTIONS PRIOR TO ANY UNDERGROUND PIPING INSTALLATIONS. IF FOOTINGS ARE IN CONFLICT AND WHERE A PIPING ROLL DOWN IS NOT POSSIBLE, COORDINATE WITH GENERAL CONTRACTOR FOR DROPS IN FOOTINGS AS REQUIRED.

10 VALVES AND FITTINGS SHALL BE THE SAME SIZE AS THE PIPING WHERE THEY ARE LOCATED UNLESS NOTED OTHERWISE.

11 THE CONTRACTOR SHALL ROUGH-IN ALL WASTES AND WATER SUPPLIES FOR FIXTURES AND PERFORM FINAL CONNECTIONS AS NEEDED.

12 ALL FLOOR DRAINS AND FLOOR SINKS SHALL BE PROVIDED WITH A TRAP GUARD UNLESS NOTED OTHERWISE.

13 ALL FLOOR/ROOF DRAINS SHALL BE PROTECTED FOR THE DURATION OF THE PROJECT. IF ANY DRAINS ARE FOUND TO CONTAIN DEBRIS THE CONTRACTOR SHALL CLEAN AND SCOPE THE DRAIN SYSTEM AT NO ADDITIONAL CHARGE TO THE OWNER.

14 THE CONTRACTOR SHALL ROUGH-IN ALL WASTES AND WATER SUPPLIES FOR FIXTURES AND PERFORM FINAL CONNECTIONS AS NEEDED.

15 ALL FLUSH VALVE WATER CLOSETS SHALL BE ROUGHED IN SO THAT THE FLUSH VALVE HANDLE IS TO THE WIDE SIDE OF THE ROOM/STALL.

16 THIS FACILITY SHALL COMPLY WITH THE AMERICANS WITH DISABILITIES ACT (ADA) ACCESSIBILITY GUIDELINES FOR BUILDINGS AND FACILITIES.

17 WHERE WATER PRESSURE WITHIN THE BUILDING EXCEEDS 80 PSI STATIC, THE CONTRACTOR SHALL INSTALL AN APPROVED WATER PRESSURE REDUCING VALVE CONFORMING TO ASSE 1003 WITH STRAINER. CONTRACTOR SHALL SET PRESSURE AT 60 PSI.

18 REGARDLESS OF HOW PIPING IS PRESENTED ON THE DRAWINGS, PROVIDE ECCENTRIC (FLAT ON TOP) REDUCERS IN HOT AND COLD DOMESTIC WATER PIPING.

19 CONDENSATE PIPING FROM THE DOWN STREAM OF THE HUB DRAIN SHALL BE A HUBLESS CAST IRON SYSTEM.

20 ALL DEVICES, EQUIPMENT, VALVES, ETC. THAT REQUIRE ACCESS SHALL NOT BE LOCATED ABOVE WOOD OR GYPSUM CEILINGS. COORDINATE WITH THE ARCHITECTURAL REFLECTED CEILING PLAN FOR ACCESSIBLE CEILING LOCATIONS OR ACCESS PANELS. PROVIDE ACCESS DOORS IN INACCESSIBLE CEILINGS TO ACCESS MEP DEVICES ABOVE CEILINGS NOT OTHERWISE ACCESSIBLE.

	PLUMBING LOAD SUMMARY			
	TOTAL COLD WATER	TOTAL HOT WATER	TOTAL WATER	TOTAL SANITARY
TOTAL FIXTURE UNITS	46.75	15.75	52	35
MAIN SIZES	2"	1 1/4"	2"	4"
GPM	48.70	17.88	50.80	N/A

PLUMBING SYMBOLS

RISER DESIGNATIONS

SYMBOL	DESCRIPTION
DI	DEIONIZED WATER RISER DESIGNATION RISER NUMBER
IW	INDUSTRIAL / LABORATORY WATER RISER DESIGNATION RISER NUMBER
LW	LABORATORY WATER RISER DESIGNATION RISER NUMBER
RO	REVERSE OSMOSIS WATER RISER DESIGNATION RISER NUMBER
S	SANITARY RISER DESIGNATION (S, V) RISER NUMBER
SW	STORM WATER RISER DESIGNATION RISER NUMBER
W	DOMESTIC WATER RISER DESIGNATION (CW, HW, HWR) RISER NUMBER

EQUIPMENT DESIGNATIONS

SYMBOL	DESCRIPTION
AD-X	AREA DRAIN DESIGNATION
ET-X	EXPANSION TANK DESIGNATION
FD-X	FLOOR DRAIN DESIGNATION
FS-X	FLOOR SINK DESIGNATION
GI-X	GREASE INTERCEPTOR DESIGNATION
GRU-X	GREASE RECOVERY UNIT DESIGNATION
HWG-X	HOT WATER GENERATOR DESIGNATION
OI-X	OIL INTERCEPTOR DESIGNATION
P-X	PLUMBING FIXTURE DESIGNATION
RD-X	ROOF / OVERFLOW DRAIN DESIGNATION
RP-X	RECIRCULATING PUMP DESIGNATION
SE-X	SEWAGE EJECTOR DESIGNATION
SP-X	SUMP PUMP DESIGNATION
WBP-X	WATER BOOSTER PUMP DESIGNATION
WM-X	WATER METER DESIGNATION
WH-X	WATER HEATER DESIGNATION

RISER DIAGRAM COMPONENTS AND SPECIALTIES

SYMBOL	DESCRIPTION
	BACKFLOW PREVENTER
	EMERGENCY EYE WASH STATION
	EMERGENCY SHOWER
	SHOCK ARRESTER
	VACUUM BREAKER
	VENT THROUGH ROOF
	TRAP ARM
	URINAL / WATER CLOSET (WALL MOUNTED)
	URINAL / WATER CLOSET (FLOOR MOUNTED)
	FLOOR / ROOF DRAIN
CO	CLEAN OUT (WALL / PIPE)
CO	CLEAN OUT (FLOOR)

COMPONENTS AND SPECIATIES

SYMBOL	DESCRIPTION
	BACKWATER VALVE
	BACKFLOW PREVENTER (DUAL CHECK TYPE)
	BACKFLOW PREVENTER (REDUCED PRESSURE TYPE)
CO	CLEAN OUT (WALL / PIPE)
CO	CLEAN OUT (FLOOR)
HB	COLD WATER INTERIOR HOSE BIB
WH	EXTERIOR WALL HYDRANT (FREEZE PROOF)
HED	HOSE END DRAIN VALVE
	AREA DRAIN
	FLOOR DRAIN
	FLOOR DRAIN WITH TRAP PRIMING LINE
	FLOOR SINK
	ROOF DRAIN
	ROOF OVERFLOW DRAIN
RO/DI	RO / DI WATER OUTLET
EW	EMERGENCY EYEWASH (HANDHELD)
	SHOCK ARRESTER WITH ACCESS DOOR
	TEMPERING VALVE
M	WATER METER

PIPING SYMBOLS

SYMBOL	DESCRIPTION
AF	ANTI-FREEZE (GLYCOL) PIPING
GR	AUTOMOTIVE LUBRICATING PIPING
DIR	DEIONIZED WATER RETURN
DIS	DEIONIZED WATER SUPPLY
DW	DISTILLED WATER
	DOMESTIC COLD WATER (POTABLE)
	DOMESTIC HOT WATER
	DOMESTIC HOT WATER RECIRCULATION
D	DRAIN WATER, MISCELLANEOUS DRAINAGE
FD	FOUNDATION DRAIN
ICW	INDUSTRIAL / LABORATORY COLD WATER
IHW	INDUSTRIAL / LABORATORY HOT WATER
IHR	INDUSTRIAL / LABORATORY HOT WATER RECIRCULATION
LP	LIQUID PROPANE
LV	LABORATORY VENT
LW	LABORATORY WASTE
MO	MOTOR OIL PIPING
G	NATURAL GAS
OD	OVERFLOW DRAIN
PD	PUMP DISCHARGE
RV	RELIEF VENT
ROR	REVERSE OSMOSIS RETURN
ROS	REVERSE OSMOSIS SUPPLY
	SANITARY
SW	SOFT WATER
SD	STORM DRAIN
TWR	TEMPERED WATER RETURN
TWS	TEMPERED WATER SUPPLY
	VENT

PLUMBING ABBREVIATIONS

A	COMPRESSED AIR
BCWR	BEARING COOLING WATER RETURN
BCWS	BEARING COOLING WATER SUPPLY
BO	BLOW OFF
BTU	BRITISH THERMAL UNIT
BTUH	BRITISH THERMAL UNITS PER HOUR
CA	CONTROL AIR
CBD	CONTINUOUS BLOWDOWN
CC	CAMPUS CONDENSATE
CF	CHEMICAL FEED
CFM	CUBIC FEET PER MINUTE
CHEL	CHELANT
CHR	CHILLED WATER RETURN
CHS	CHILLED WATER SUPPLY
CO	CLEANOUT
CW	COLD WATER, DOMESTIC CITY WATER
DHR	DISTRIBUTION HEATING WATER RETURN
DHS	DISTRIBUTION HEATING WATER SUPPLY
DIA	DIAMETER
DW	DISTILLED WATER
EA	EXHAUST AIR
ED	EQUIPMENT DRAIN
EJ	EXPANSION JOINT
#2FOR	NUMBER 2 FUEL OIL RETURN
#2FOS	NUMBER 2 FUEL OIL SUPPLY
#6FOR	NUMBER 6 FUEL OIL RETURN
#6FOS	NUMBER 6 FUEL OIL SUPPLY
F	FIRE LINE
F&T	FLOAT AND THERMOSTATIC
FD	FORCED DRAFT
FDV	FIRE DEPARTMENT VALVE
FF	FINISHED FLOOR
FFE	FINISHED FLOOR ELEVATION
FOF	FUEL OIL FILL
FOO	FUEL OIL OVERFLOW
FOSUCT	FUEL OIL SUCTION
FOT	FUEL OIL TRANSFER
FOVENT	FUEL OIL VENT
FPM	FEET PER MINUTE
FPS	FEET PER SECOND
FW	FEED WATER
FWR	FEED WATER RECIRCULATION
FWS	FEED WATER SUPPLY
°F	DEGREES FAHRENHEIT
G	NATURAL GAS
GAL	GALLON, GALLONS
GPH	GALLONS PER HOUR
GPM	GALLONS PER MINUTE
HPR	HIGH PRESSURE STEAM RETURN
HPS	HIGH PRESSURE STEAM SUPPLY
HR	HEATING WATER RETURN
HRR	HEAT RECOVERY RETURN
HRS	HEAT RECOVERY SUPPLY
HS	HEATING WATER SUPPLY
HTHW	HIGH TEMPERATURE HEATING WATER SUPPLY
HTWR	HIGH TEMPERATURE HEATING WATER RETURN
HW	HOT WATER
HWR	HOT WATER RECIRCULATION
IA	INSTRUMENT AIR
KW	KILOWATTS
LP	LIQUID PROPANE
LPG	LIQUID PETROLEUM GAS
LPR	LOW PRESSURE STEAM RETURN
LPS	LOW PRESSURE STEAM SUPPLY
MAV	MANUAL AIR VENT
MBH	THOUSAND BRITISH THERMAL UNITS PER HOUR
MCC	MOTOR CONTROL CENTER
MOD	MOTOR OPERATED DAMPER
MPR	MEDIUM PRESSURE STEAM RETURN
MPS	MEDIUM PRESSURE STEAM SUPPLY
N/A	NOT APPLICABLE
NC	NORMALLY CLOSED
NO	NORMALLY OPEN
No	NUMBER
NPSH	NET POSITIVE SUCTION HEAD
OD	OVERFLOW DRAIN
PA	PLANT AIR
PC	PUMPED CONDENSATE
PCR	PUMP CONDENSATE RECIRCULATION
PPH	POUNDS PER HOUR
PSIG	POUNDS PER SQUARE INCH GAUGE
RA	RETURN AIR, RELIEF AIR
RDR	ROOF DRAIN
RPM	REVOLUTIONS PER MINUTE
RV	RELIEF VENT
RX	REMOVE EXISTING
SA	SUPPLY AIR
SAN	SANITARY
SS	STAINLESS STEEL
SSUL	SODIUM SULFITE
STDR	STORM DRAIN
SW	SOFT WATER
TW	TREATED WATER
TYP	TYPICAL
VD	VOLUME DAMPER
VFD	VARIABLE FREQUENCY DRIVE
VSD	VARIABLE SPEED DRIVE
VTR	VENT THROUGH ROOF

CLIENT AND PROJECT

NORTH CAROLINA DEPARTMENT OF TRANSPORTATION

SCO ID NO.: 14-11006-01A

NEW DIVISION 8 OFFICE BUILDING

150 DOT DRIVE
CARTHAGE, NC 28327

DESIGNER

ANDRE JOHNSON ARCHITECT

PO BOX 14637
RALEIGH, NORTH CAROLINA 27620
TELEPHONE: 919.661.6935
MAIL: info@andrejohnsonarchitect.com

© 2015 Andre Johnson Architect, PLLC
Duplication or reproduction by any means without the express written consent of Andre L. Johnson, Architect is a violation of Federal and international law. The information contained on this document is the intellectual property of Andre L. Johnson, Architect and all rights thereto are Reserved. For exceptions, refer to the Owner-Architect Agreement.

CONSULTANT

RMF ENGINEERING, INC.
301 McCullough Drive, Suite 400
Charlotte, NC 28262

REGISTRATION

RMF ENGINEERING, INC. CERT. NO. C-1125 RALEIGH

NORTH CAROLINA PROFESSIONAL SEAL 041471 ENGINEER BLAKE A. SMITH

Aug 5 2016

ISSUE

No.	Date	Description

SHEET INFO

PLUMBING NOTES, SYMBOLS, AND ABREVIATIONS

P001

PROJECT NO: P1423.00
DATE: MAY 16, 2016

CONSTRUCTION DOCUMENTS

WALL TYPE LEGEND

3A — WALL TYPE SYMBOL - REFER TO SHEET A500-A502 FOR WALL TYPE CONSTRUCTION & RATINGS

NEW UNRATED STUD WALL

GENERAL NOTES:

1. ALL KITCHEN EQUIPMENT CONNECTIONS TO POTABLE WATER SOURCES SHALL BE PROTECTED BY BACKFLOW PREVENTORS PER NORTH CAROLINA PLUMBING CODE AND LOCAL AHJ. BACKFLOW PREVENTORS SHALL BE SIMILAR TO ASSE 1022. INSTALL BACKFLOW PREVENTORS IN A VISIABLE AND ACCESSABLE AREA. PIPE VENT TO CLOSEST FLOOR SINK.

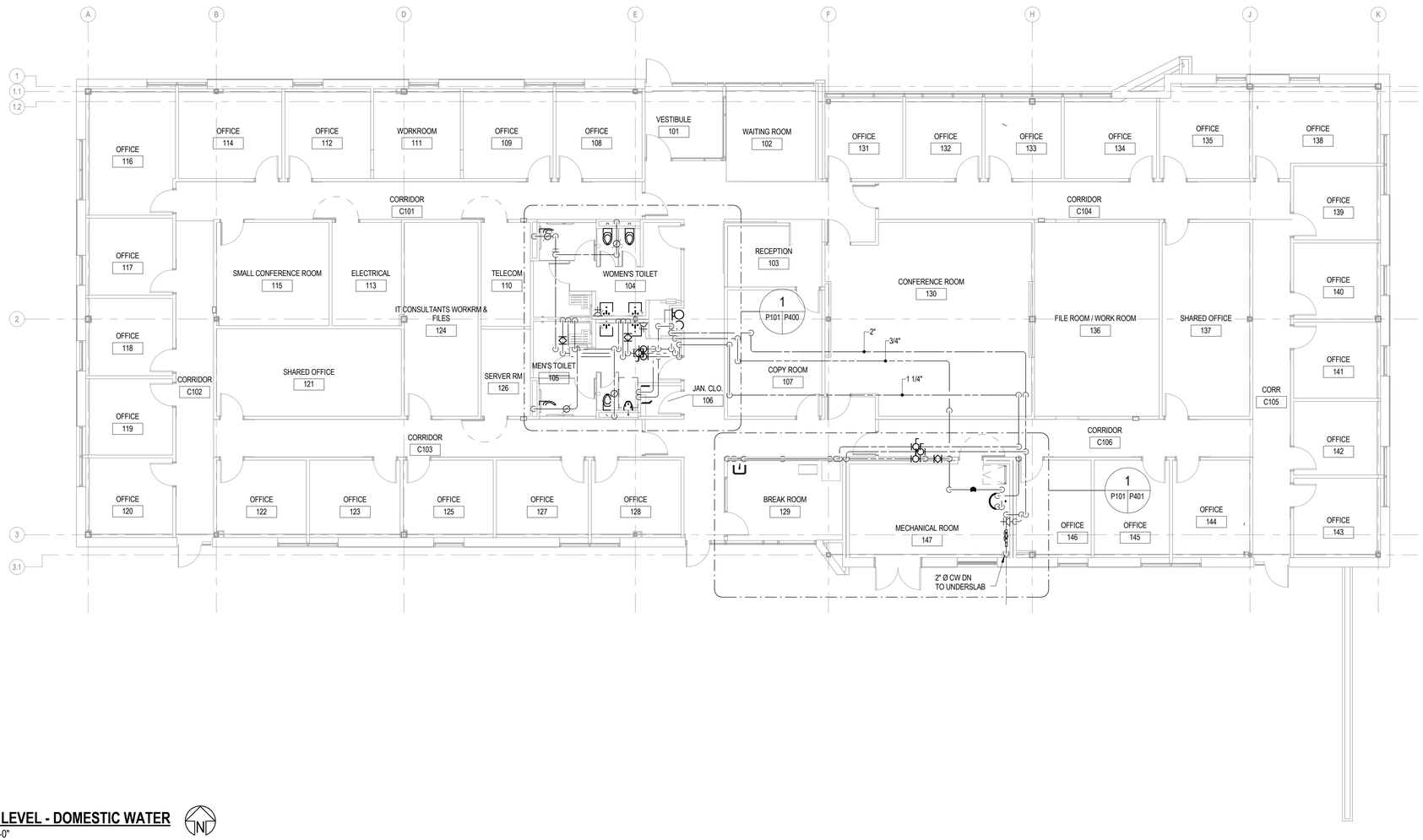

1 P101 **01 FLOOR LEVEL - DOMESTIC WATER**

SCALE: 1/8" = 1'-0"

0' 4' 8' 16' 32'

CLIENT AND PROJECT

NORTH CAROLINA DEPARTMENT OF TRANSPORTATION

SCO ID NO.: 14-11006-01A

NEW DIVISION 8 OFFICE BUILDING

150 DOT DRIVE
CARTHAGE, NC 28327

DESIGNER

ANDRE JOHNSON ARCHITECT

PO BOX 14637
RALEIGH, NORTH CAROLINA 27620
TELEPHONE: 919.661.6935
MAIL: info@andrejohnsonarchitect.com

© 2015 Andre Johnson Architect, PLLC
Duplication or reproduction by any means without the express written consent of Andre L. Johnson, Architect is a violation of Federal and international law. The information contained on this document is the intellectual property of Andre L. Johnson, Architect and all rights thereto are Reserved. For exceptions, refer to the Owner-Architect Agreement.

CONSULTANT

RMF ENGINEERING, INC.
301 McCullough Drive, Suite 400
Charlotte, NC 28262

REGISTRATION

RMF ENGINEERING, INC. P.A. CERT. NO. C-1125 RALEIGH, N.C.

NORTH CAROLINA PROFESSIONAL SEAL 041471 ENGINEER BLAKE A. SMITH

Aug 5 2016

ISSUE

No.	Date	Description

SHEET INFO

DOMESTIC WATER

P101

PROJECT NO: P1423.00
DATE: MAY 16, 2016

CONSTRUCTION DOCUMENTS

DRAWING NOTE:

1. VENT PIPE MUST RISE 6" BEFORE TURNING HORIZONTAL.
2. CONTRACTOR SHALL COORDINATE SANITARY SLAB PENETRATION WITH COLUMN. KEEP PIPE WITHIN WALL ON EITHER SIDE OF COLUMN.

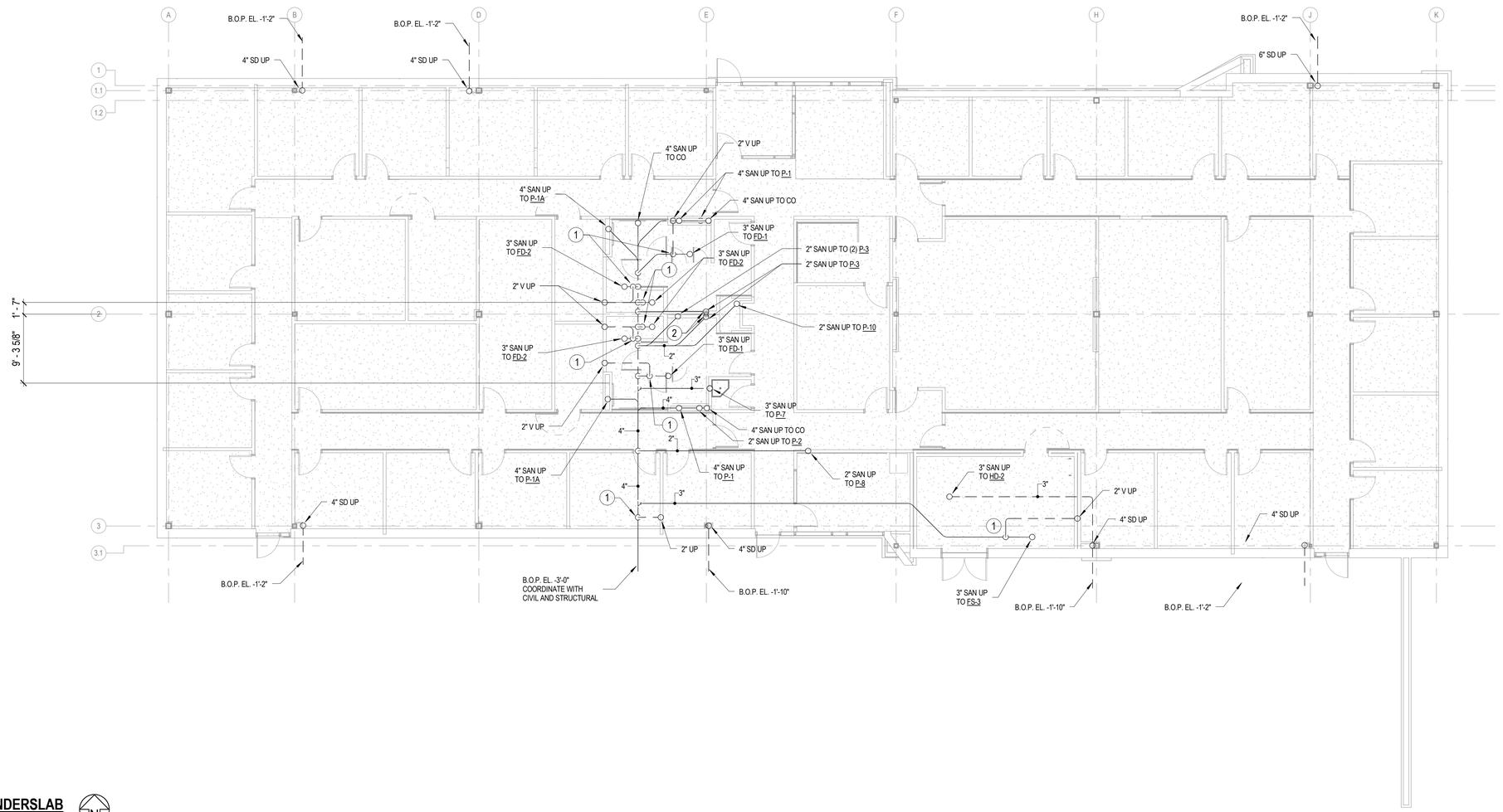

1 / P201 **00 FLOOR LEVEL - UNDERSLAB**

SCALE: 1/8" = 1'-0"

0' 4' 8' 16' 32'

CLIENT AND PROJECT

NORTH CAROLINA DEPARTMENT OF TRANSPORTATION

SCO ID NO.: 14-11006-01A

NEW DIVISION 8 OFFICE BUILDING

150 DOT DRIVE
CARTHAGE, NC 28327

DESIGNER

ANDRE JOHNSON ARCHITECT

PO BOX 14637
RALEIGH, NORTH CAROLINA 27620
TELEPHONE: 919.661.6935
MAIL: info@andrejohnsonarchitect.com

© 2015 Andre Johnson Architect, PLLC
Duplication or reproduction by any means without the express written consent of Andre L. Johnson, Architect is a violation of Federal and international law. The information contained on this document is the intellectual property of Andre L. Johnson, Architect and all rights thereto are Reserved. For exceptions, refer to the Owner-Architect Agreement.

CONSULTANT

RMF ENGINEERING, INC.
301 McCullough Drive, Suite 400
Charlotte, NC 28262

REGISTRATION

RMF ENGINEERING, INC. CERT. NO. C-1125 RALEIGH, N.C.

NORTH CAROLINA PROFESSIONAL SEAL 041477 ENGINEER BLAKE A. SMITH

Aug 5 2016

ISSUE

No.	Date	Description

SHEET INFO

SANITARY, STORM AND VENT UNDERSLAB

P201

PROJECT NO: P1423.00
DATE: MAY 16, 2016

CONSTRUCTION DOCUMENTS

WALL TYPE LEGEND

3A — WALL TYPE SYMBOL - REFER TO SHEET A500-A502 FOR WALL TYPE CONSTRUCTION & RATINGS

NEW UNRATED STUD WALL

DRAWING NOTE:

1. CONTRACTOR TO COORDINATE SANITARY ALONG OPPOSITE SIDES OF COLUMN. OFFSET SINK OUTLET AND ROUGH-IN AS NECESSARY.

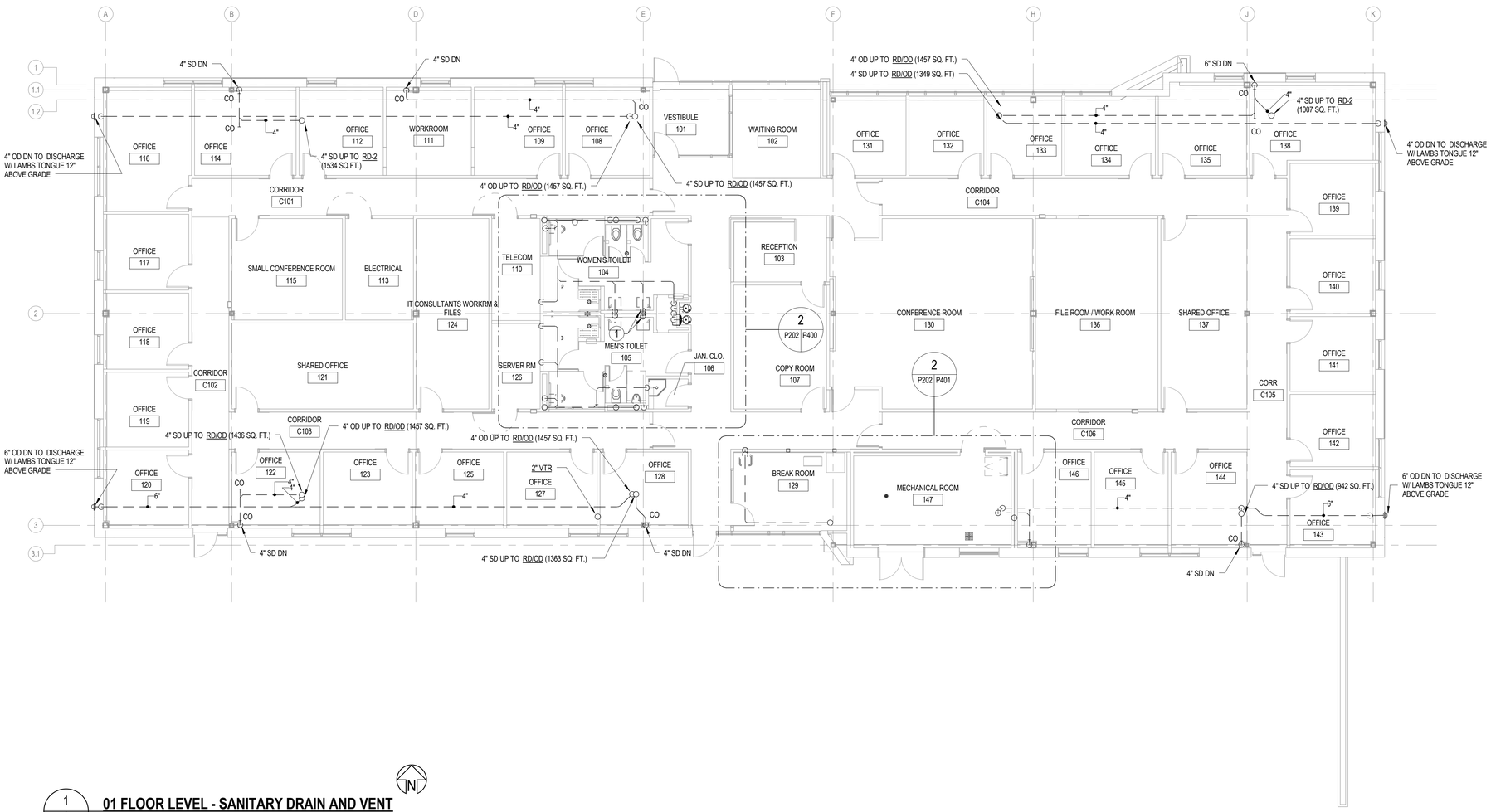

1 / P202 — **01 FLOOR LEVEL - SANITARY DRAIN AND VENT**

SCALE: 1/8" = 1'-0"

0' 4' 8' 16' 32'

CLIENT AND PROJECT

NORTH CAROLINA DEPARTMENT OF TRANSPORTATION

SCO ID NO.: 14-11006-01A

NEW DIVISION 8 OFFICE BUILDING

150 DOT DRIVE
CARTHAGE, NC 28327

DESIGNER

ANDRE JOHNSON ARCHITECT

PO BOX 14637
RALEIGH, NORTH CAROLINA 27620
TELEPHONE: 919.661.6935
MAIL: info@andrejohnsonarchitect.com

© 2015 Andre Johnson Architect, PLLC
Duplication or reproduction by any means without the express written consent of Andre L. Johnson, Architect is a violation of Federal and international law. The information contained on this document is the intellectual property of Andre L. Johnson, Architect and all rights thereto are Reserved. For exceptions, refer to the Owner-Architect Agreement.

CONSULTANT

RMF ENGINEERING, INC.
301 McCullough Drive, Suite 400
Charlotte, NC 28262

REGISTRATION

RMF ENGINEERING, INC. P.A. CERT. NO. C-1125 RALEIGH, N.C.

NORTH CAROLINA PROFESSIONAL SEAL 041471 ENGINEER BLAKE A. SMITH

Aug 5 2016

ISSUE

No.	Date	Description

SHEET INFO

SANITARY AND STORM

P202

PROJECT NO: P1423.00
DATE: MAY 16, 2016

CONSTRUCTION DOCUMENTS

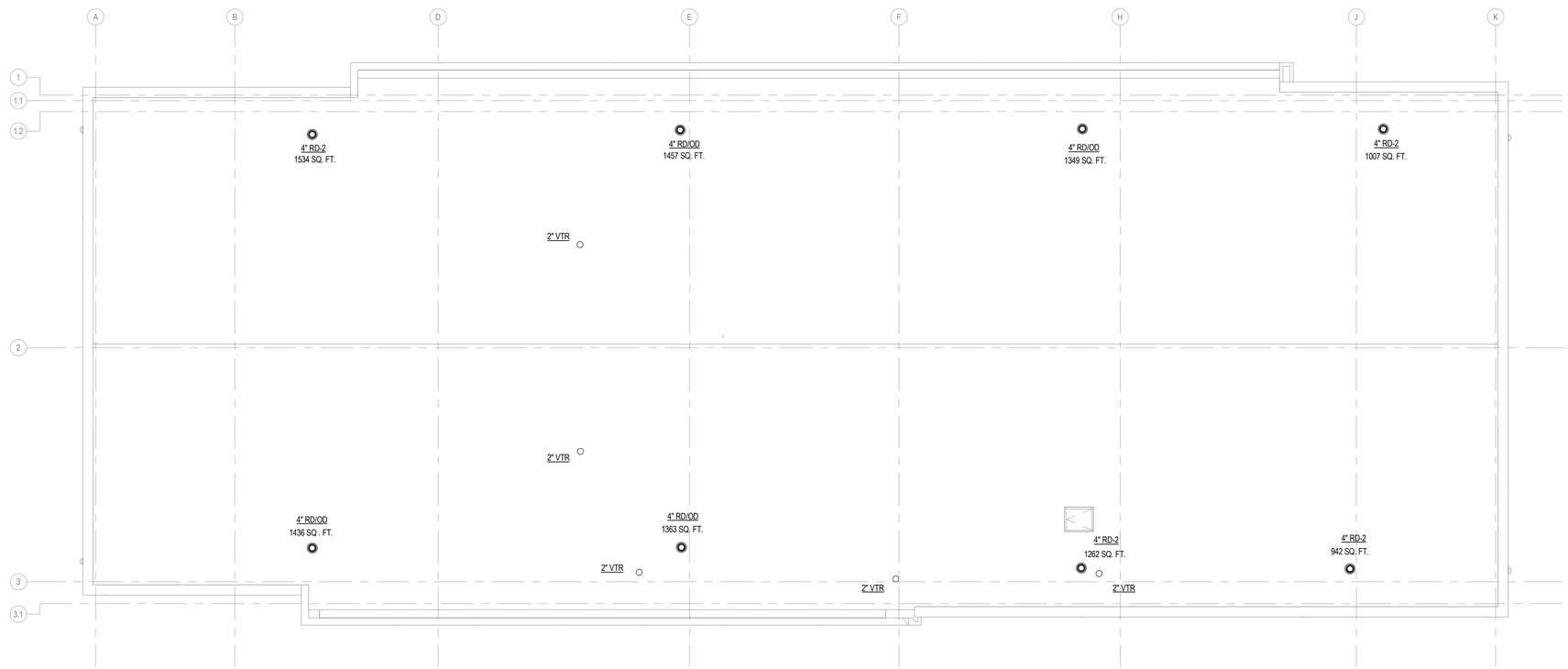

1 P203

02 ROOF LEVEL - SANITARY DRAIN AND VENT

SCALE: 1/8" = 1'-0"

0' 4' 8' 16' 32'

CLIENT AND PROJECT

NORTH CAROLINA DEPARTMENT OF TRANSPORTATION

SCO ID NO.: 14-11006-01A

NEW DIVISION 8 OFFICE BUILDING

150 DOT DRIVE
CARTHAGE, NC 28327

DESIGNER

ANDRE JOHNSON ARCHITECT

PO BOX 14637
RALEIGH, NORTH CAROLINA 27620
TELEPHONE: 919.661.6935
MAIL: info@andrejohnsonarchitect.com

© 2015 Andre Johnson Architect, PLLC
Duplication or reproduction by any means without the express written consent of Andre L. Johnson, Architect is a violation of Federal and international law. The information contained on this document is the intellectual property of Andre L. Johnson, Architect and all rights thereto are Reserved. For exceptions, refer to the Owner-Architect Agreement.

CONSULTANT

RMF ENGINEERING, INC.
301 McCullough Drive, Suite 400
Charlotte, NC 28262

REGISTRATION

RMF ENGINEERING, INC. P.A. CERT. NO. C-1125 RALEIGH, N.C.

NORTH CAROLINA PROFESSIONAL SEAL 041471 ENGINEER BLAKE A. SMITH

Aug 5 2016

ISSUE

No.	Date	Description

SHEET INFO

SANITARY AND STORM ROOF

P203

PROJECT NO: P1423.00
DATE: MAY 16, 2016
CONSTRUCTION DOCUMENTS

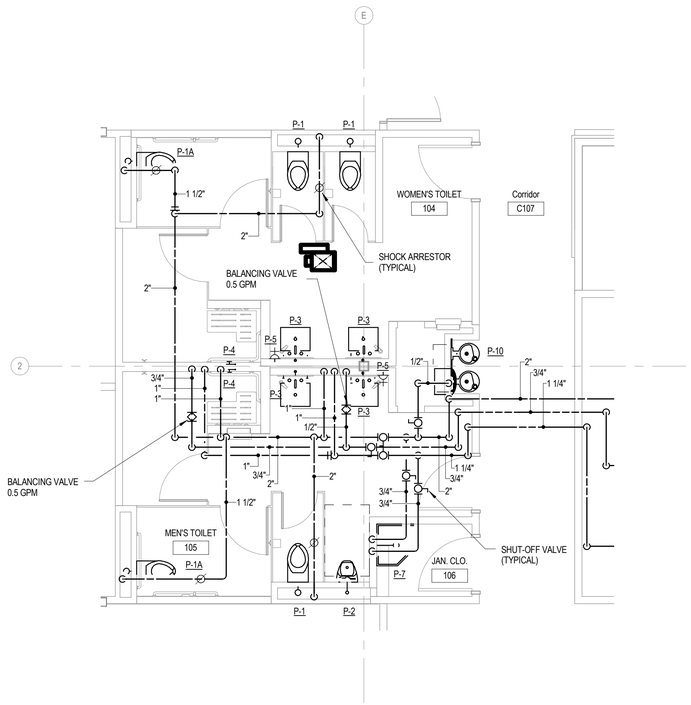

1 P101 P400

01 FLOOR LEVEL - DOMESTIC WATER - ENLARGED RESTROOMS

SCALE: 1/4" = 1'-0"

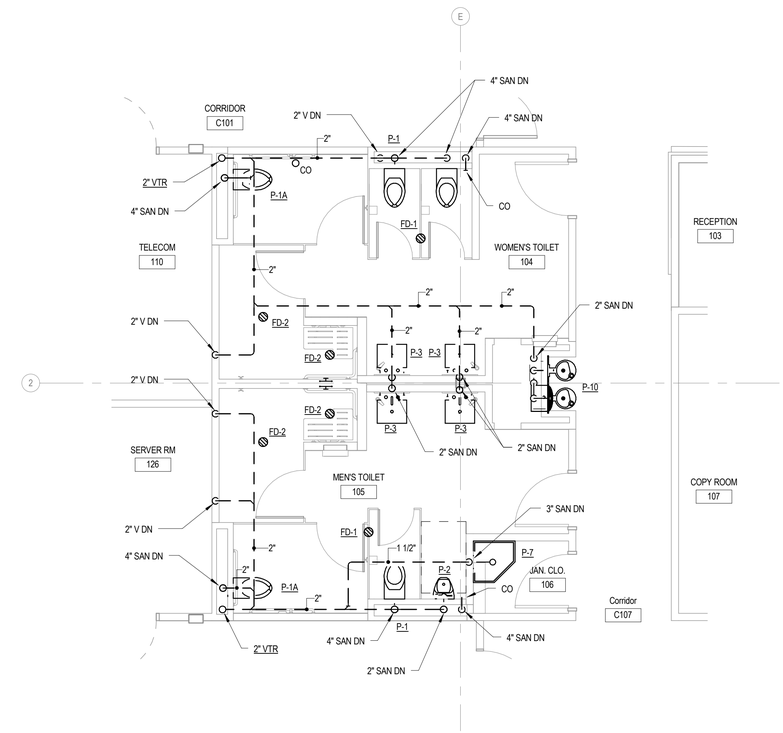

2 P202 P400

01 FLOOR LEVEL - SANITARY DRAIN AND VENT - ENLARGED RESTROOMS

SCALE: 1/4" = 1'-0"

CLIENT AND PROJECT

NORTH CAROLINA DEPARTMENT OF TRANSPORTATION

SCO ID NO.: 14-11006-01A

NEW DIVISION 8 OFFICE BUILDING

150 DOT DRIVE
CARTHAGE, NC 28327

DESIGNER

ANDRE JOHNSON ARCHITECT

PO BOX 14637
RALEIGH, NORTH CAROLINA 27620
TELEPHONE: 919.661.6935
MAIL: info@andrejohnsonarchitect.com

© 2015 Andre Johnson Architect, PLLC
Duplication or reproduction by any means without the express written consent of Andre L. Johnson, Architect is a violation of Federal and international law. The information contained on this document is the intellectual property of Andre L. Johnson, Architect and all rights thereto are Reserved. For exceptions, refer to the Owner-Architect Agreement.

CONSULTANT

RMF ENGINEERING, INC.
301 McCullough Drive, Suite 400
Charlotte, NC 28262

REGISTRATION

RMF ENGINEERING, INC. CERT. NO. C-1125 RALEIGH, N.C.

NORTH CAROLINA PROFESSIONAL SEAL 041477 ENGINEER BLAKE A. SMITH

Aug 5 2016

ISSUE

No.	Date	Description

SHEET INFO

RESTROOM ENLARGED PLANS

P400

PROJECT NO: P1423.00
DATE: MAY 16, 2016
CONSTRUCTION DOCUMENTS

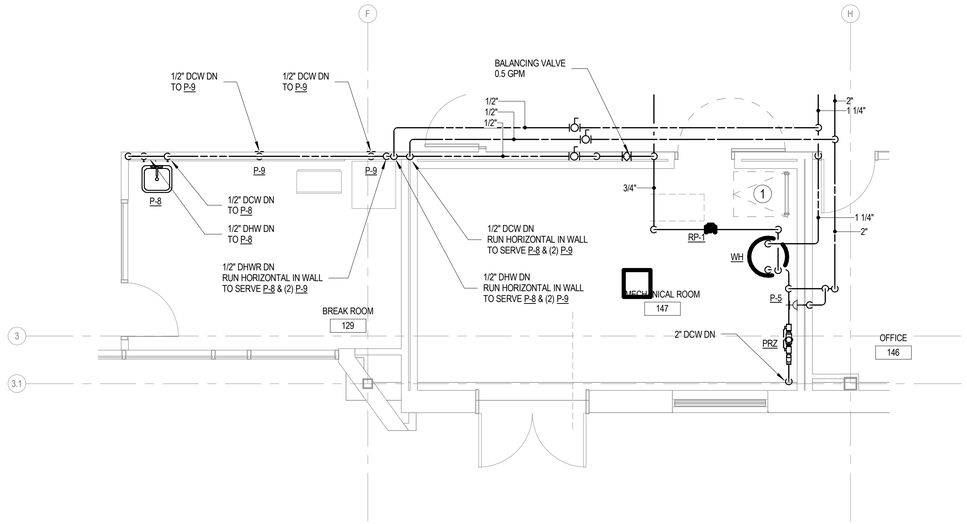

1
P101 | P401

01 FLOOR LEVEL - DOMESTIC WATER - BREAKROOM & MECHANICAL ROOM

SCALE: 1/4" = 1'-0"

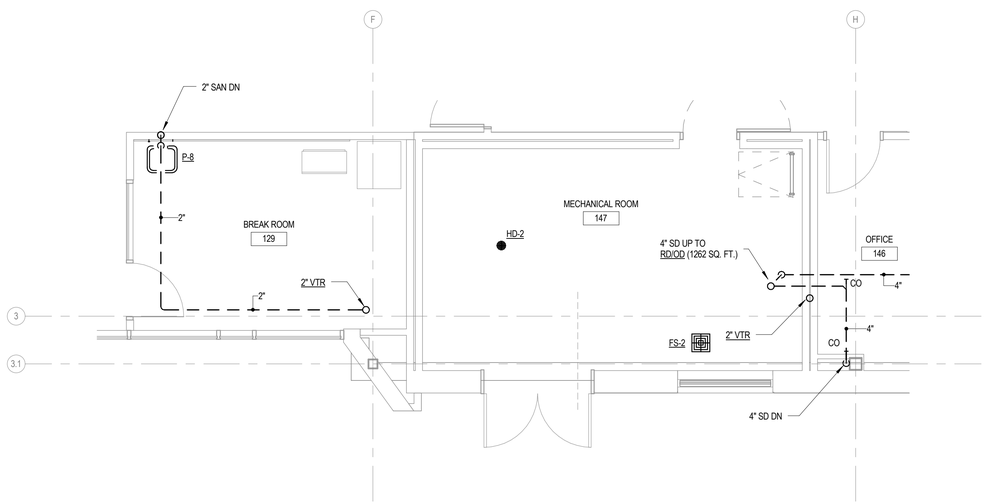

2
P202 | P401

01 FLOOR LEVEL - SANITARY DRAIN AND VENT - BREAKROOM & MECHANICAL ROOM

SCALE: 1/4" = 1'-0"

GENERAL NOTES:

1. ALL KITCHEN EQUIPMENT CONNECTIONS TO POTABLE WATER SOURCES SHALL BE PROTECTED BY BACKFLOW PREVENTORS PER NORTH CAROLINA PLUMBING CODE AND LOCAL AHJ. BACKFLOW PREVENTORS SHALL BE SIMILAR TO ASSE 1022. INSTALL BACKFLOW PREVENTORS IN A VISIABLE AND ACCESSABLE AREA. PIPE VENT TO CLOSEST FLOOR SINK.

DRAWING NOTE:

1 ALL DISCIPLINES SHALL BE CLEAR OF ROOF LADDER ACCESS CLEARANCE.

CLIENT AND PROJECT

NORTH CAROLINA DEPARTMENT OF TRANSPORTATION

SCO ID NO.: 14-11006-01A

NEW DIVISION 8 OFFICE BUILDING

150 DOT DRIVE
CARTHAGE, NC 28327

DESIGNER

ANDRE JOHNSON ARCHITECT

PO BOX 14637
RALEIGH, NORTH CAROLINA 27620
TELEPHONE: 919.661.6935
MAIL: info@andrejohnsonarchitect.com

© 2015 Andre Johnson Architect, PLLC
Duplication or reproduction by any means without the express written consent of Andre L. Johnson, Architect is a violation of Federal and international law. The information contained on this document is the intellectual property of Andre L. Johnson, Architect and all rights thereto are Reserved. For exceptions, refer to the Owner-Architect Agreement.

CONSULTANT

RMF ENGINEERING, INC.
301 McCullough Drive, Suite 400
Charlotte, NC 28262

REGISTRATION

RMF ENGINEERING, INC. P.A. CERT. NO. C-1125 RALEIGH, N.C.

NORTH CAROLINA PROFESSIONAL SEAL 041471 ENGINEER BLAKE A. SMITH

Aug 5 2016

ISSUE

No.	Date	Description

SHEET INFO

BREAKROOM & MECHANICAL ROOM ENLARGED PLANS

P401

PROJECT NO: P1423.00
DATE: MAY 16, 2016

CONSTRUCTION DOCUMENTS

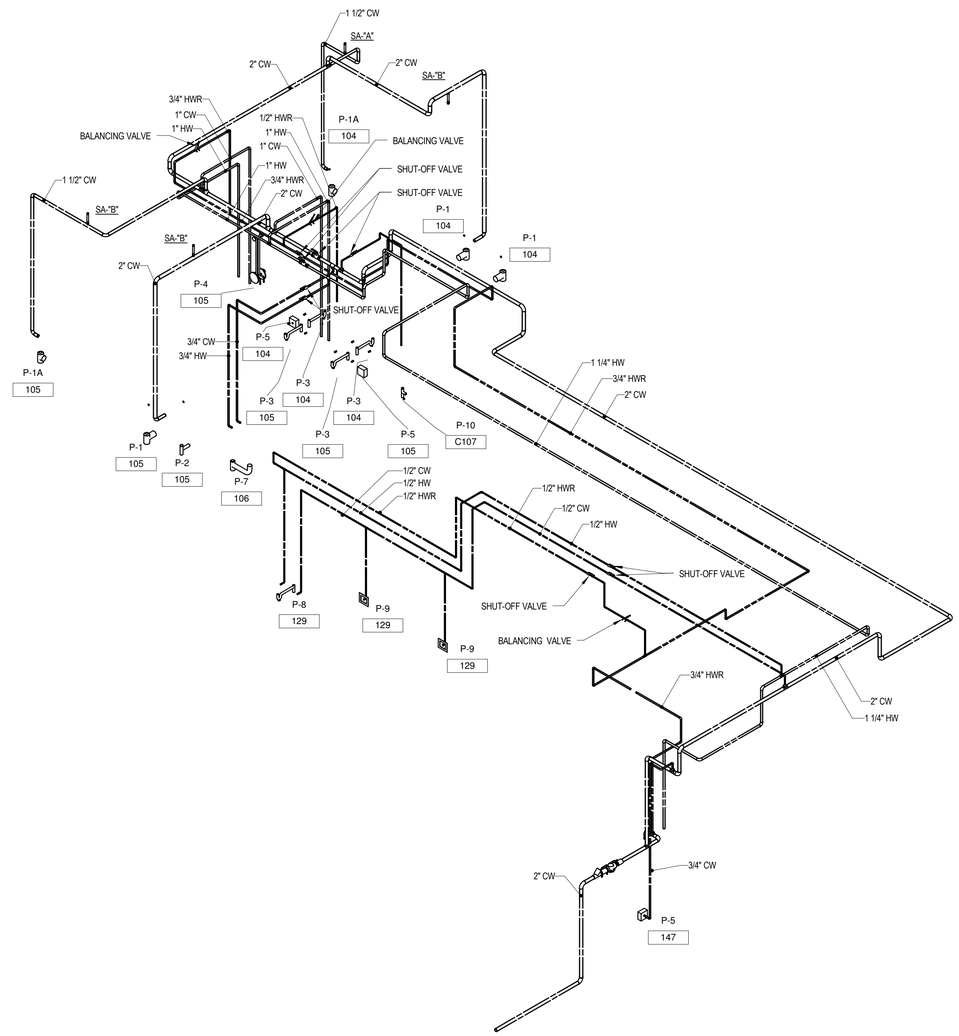

1 P500

PLUMBING RISER DIAGRAM

SCALE: N.T.S.

CLIENT AND PROJECT

NORTH CAROLINA DEPARTMENT OF TRANSPORTATION

SCO ID NO.: 14-11006-01A

NEW DIVISION 8 OFFICE BUILDING

150 DOT DRIVE
CARTHAGE, NC 28327

DESIGNER

ANDRE JOHNSON ARCHITECT

PO BOX 14637
RALEIGH, NORTH CAROLINA 27620
TELEPHONE: 919.661.6935
MAIL: info@andrejohnsonarchitect.com

© 2015 Andre Johnson Architect, PLLC
Duplication or reproduction by any means without the express written consent of Andre L. Johnson, Architect is a violation of Federal and international law. The information contained on this document is the intellectual property of Andre L. Johnson, Architect and all rights thereto are Reserved. For exceptions, refer to the Owner-Architect Agreement.

CONSULTANT

RMF ENGINEERING, INC.
301 McCullough Drive, Suite 400
Charlotte, NC 28262

REGISTRATION

RMF ENGINEERING, INC. P.A. CERT. NO. C-1125 RALEIGH, N.C.

NORTH CAROLINA PROFESSIONAL SEAL 041471 ENGINEER BLAKE A. SMITH

Aug 5 2016

ISSUE

No.	Date	Description

SHEET INFO

PLUMBING RISER DIAGRAM - DOMESTIC WATER

P500

PROJECT NO: P1423.00
DATE: MAY 16, 2016
CONSTRUCTION DOCUMENTS

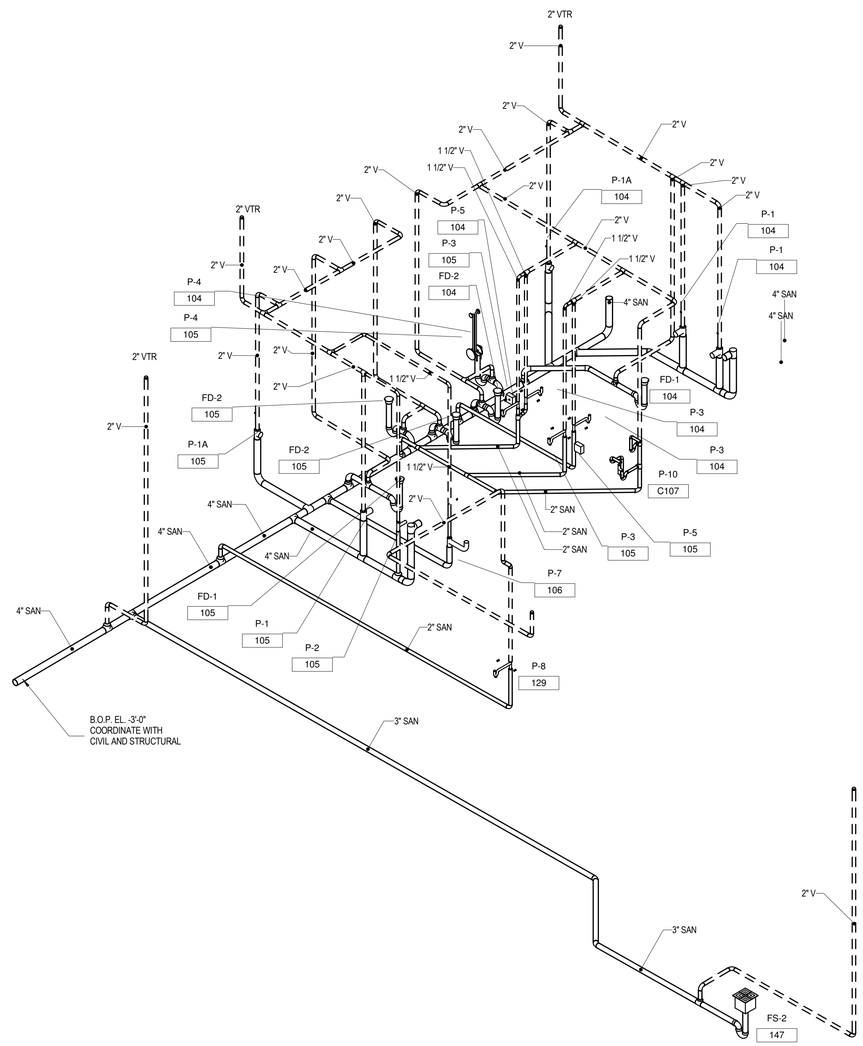

1 / P501 **PLUMBING RISER DIAGRAM**
SCALE: N.T.S.

CLIENT AND PROJECT

NORTH CAROLINA DEPARTMENT OF TRANSPORTATION

SCO ID NO.: 14-11006-01A

NEW DIVISION 8 OFFICE BUILDING

150 DOT DRIVE
CARTHAGE, NC 28327

DESIGNER

ANDRE JOHNSON ARCHITECT
PO BOX 14637
RALEIGH, NORTH CAROLINA 27620
TELEPHONE: 919.661.6935
MAIL: info@andrejohnsonarchitect.com

© 2015 Andre Johnson Architect, PLLC
Duplication or reproduction by any means without the express written consent of Andre L. Johnson, Architect is a violation of Federal and international law. The information contained on this document is the intellectual property of Andre L. Johnson, Architect and all rights thereto are Reserved. For exceptions, refer to the Owner-Architect Agreement.

CONSULTANT

RMF ENGINEERING, INC.
301 McCullough Drive, Suite 400
Charlotte, NC 28262

REGISTRATION

RMF ENGINEERING, INC. CERT. NO. C-1125 ENGINEERING

NORTH CAROLINA PROFESSIONAL SEAL 041471 ENGINEER BLAKE A. SMITH

Aug 5 2016

ISSUE

No.	Date	Description

SHEET INFO

PLUMBING RISER DIAGRAM - SANITARY AND VENT

P501

PROJECT NO: P1423.00
DATE: MAY 16, 2016
CONSTRUCTION DOCUMENTS

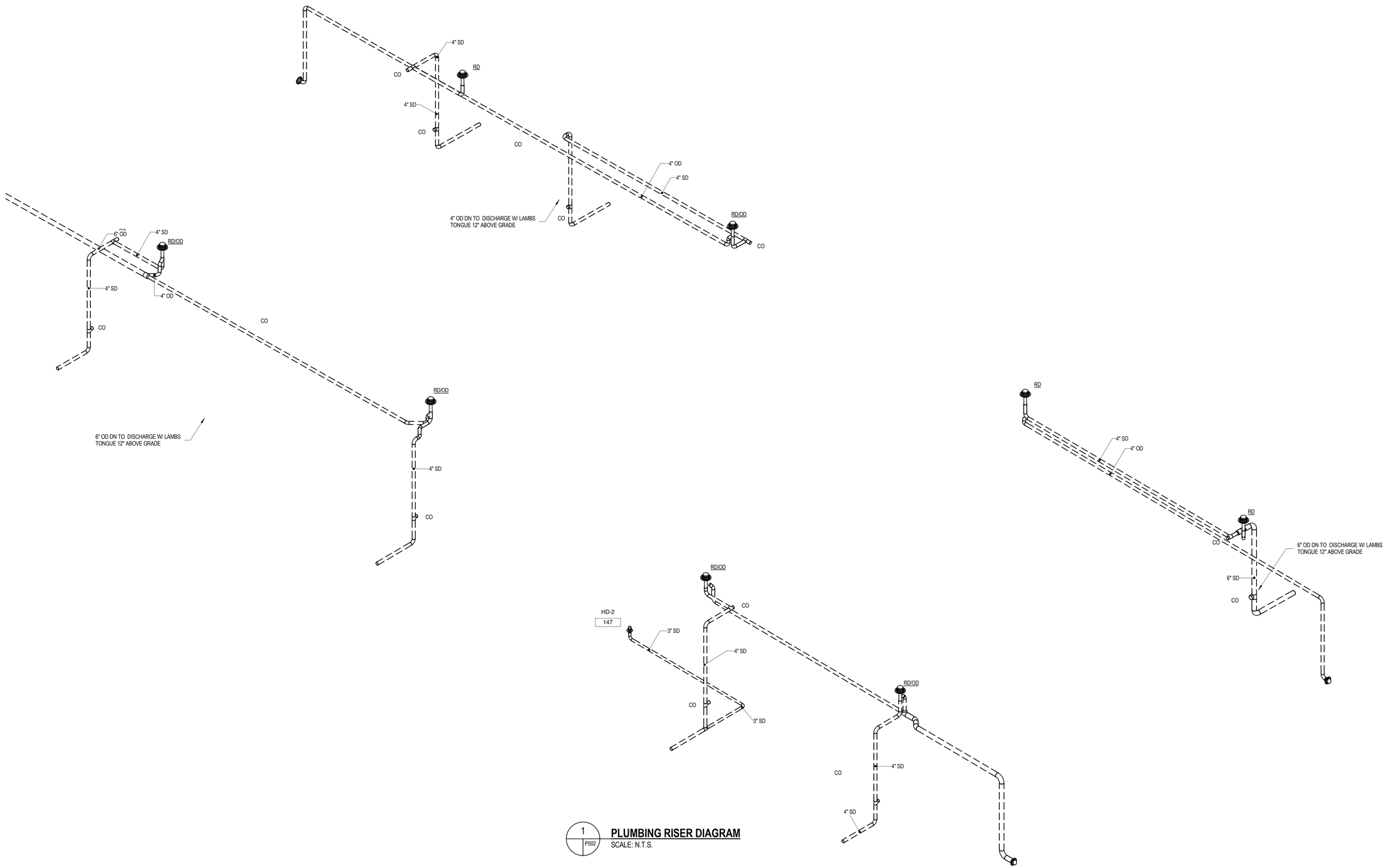

1 P502 **PLUMBING RISER DIAGRAM**
SCALE: N.T.S.

CLIENT AND PROJECT

NORTH CAROLINA DEPARTMENT OF TRANSPORTATION

SCO ID NO.: 14-11006-01A

NEW DIVISION 8 OFFICE BUILDING

150 DOT DRIVE
CARTHAGE, NC 28327

DESIGNER

ANDRE JOHNSON ARCHITECT

PO BOX 14637
RALEIGH, NORTH CAROLINA 27620
TELEPHONE: 919.661.6935
MAIL: info@andrejohnsonarchitect.com

© 2015 Andre Johnson Architect, PLLC
Duplication or reproduction by any means without the express written consent of Andre L. Johnson, Architect is a violation of Federal and international law. The information contained on this document is the intellectual property of Andre L. Johnson, Architect and all rights thereto are Reserved. For exceptions, refer to the Owner-Architect Agreement.

CONSULTANT

RMF ENGINEERING, INC.
301 McCullough Drive, Suite 400
Charlotte, NC 28262

REGISTRATION

RMF ENGINEERING, INC. CERT. NO. C-1125 RALEIGH, N.C.

NORTH CAROLINA PROFESSIONAL SEAL 041471 ENGINEER BLAKE A. SMITH

Aug 5 2016

ISSUE

No.	Date	Description

SHEET INFO

PLUMBING RISER DIAGRAM - STORM DRAIN

P502

PROJECT NO: P1423.00
DATE: MAY 16, 2016

CONSTRUCTION DOCUMENTS

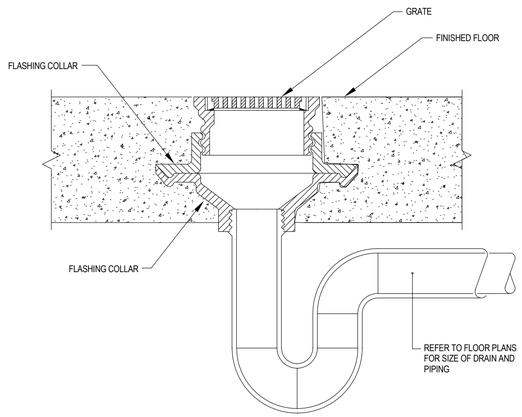

1 P700 **DETAIL - FLOOR DRAIN1**
SCALE:NONE

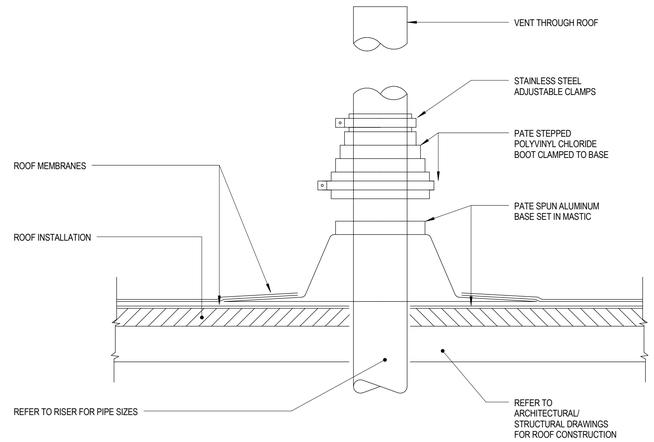

3 P700 **DETAIL - SANITARY VENT THROUGH ROOF**
SCALE:NONE

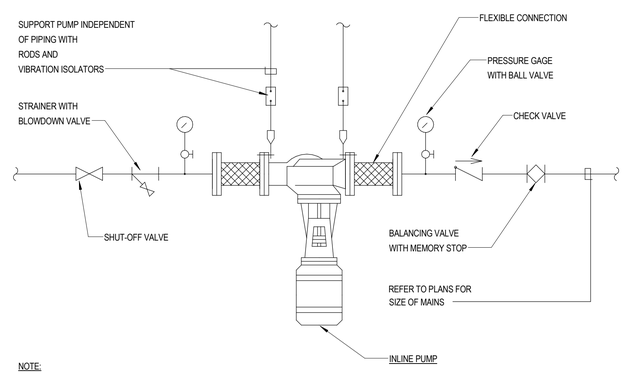

NOTE:

1. PUMP SHALL BE INSTALLED HORIZONTAL OR VERTICAL AS REQUIRED BY PUMP MANUFACTURER.

4 P700 **DETAIL - HOT WATER RECIRCULATION PUMP**
SCALE: 12" = 1'-0"

CLIENT AND PROJECT

NORTH CAROLINA DEPARTMENT OF TRANSPORTATION

SCO ID NO.: 14-11006-01A

NEW DIVISION 8 OFFICE BUILDING

150 DOT DRIVE
CARTHAGE, NC 28327

DESIGNER

ANDRE JOHNSON ARCHITECT

PO BOX 14637
RALEIGH, NORTH CAROLINA 27620
TELEPHONE: 919.661.6935
MAIL: info@andrejohnsonarchitect.com

© 2015 Andre Johnson Architect, PLLC
Duplication or reproduction by any means without the express written consent of Andre L. Johnson, Architect is a violation of Federal and international law. The information contained on this document is the intellectual property of Andre L. Johnson, Architect and all rights thereto are Reserved. For exceptions, refer to the Owner-Architect Agreement.

CONSULTANT

RMF ENGINEERING, INC.
301 McCullough Drive, Suite 400
Charlotte, NC 28262

REGISTRATION

RMF ENGINEERING, INC. P.A. CERT. NO. C-1125 RALEIGH, N.C.
NORTH CAROLINA PROFESSIONAL SEAL 041471 ENGINEER BLAKE A. SMITH

Aug 5 2016

ISSUE

No.	Date	Description

SHEET INFO

PLUMBING DETAILS

P700

PROJECT NO: P1423.00
DATE: MAY 16, 2016

CONSTRUCTION DOCUMENTS

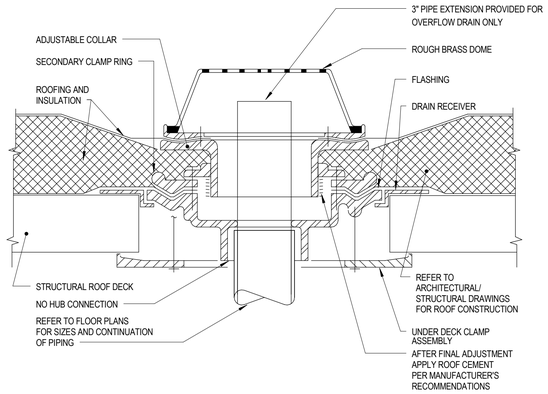

1 / P701 **DETAIL - ROOF/OVERFLOW DRAIN**
SCALE:NONE

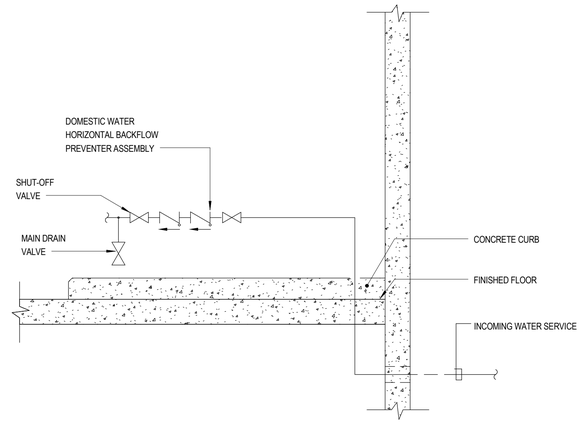

2 / P701 **DETAIL - INCOMING WATER SERVICE (HORIZONTAL)**
SCALE:NONE

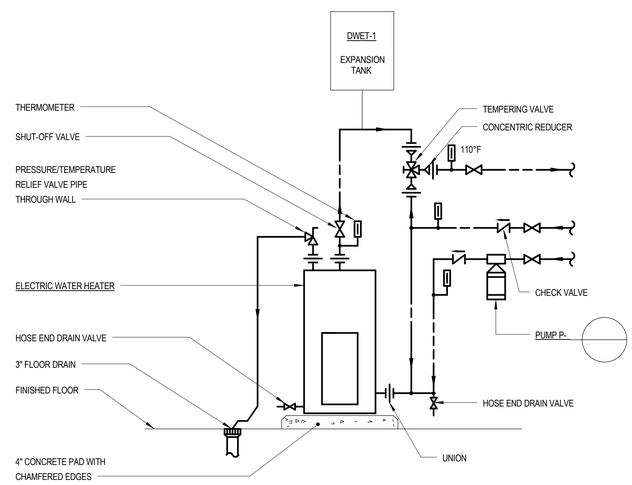

5 / P701 **DETAIL - ELECTRIC WATER HEATER (WITH RECIRC PUMP)**
SCALE: 12" = 1'-0"

CLIENT AND PROJECT

NORTH CAROLINA DEPARTMENT OF TRANSPORTATION

SCO ID NO.: 14-11006-01A

NEW DIVISION 8 OFFICE BUILDING

150 DOT DRIVE
CARTHAGE, NC 28327

DESIGNER

ANDRE JOHNSON ARCHITECT
PO BOX 14637
RALEIGH, NORTH CAROLINA 27620
TELEPHONE: 919.661.6935
MAIL: info@andrejohnsonarchitect.com

© 2015 Andre Johnson Architect, PLLC
Duplication or reproduction by any means without the express written consent of Andre L. Johnson, Architect is a violation of Federal and international law. The information contained on this document is the intellectual property of Andre L. Johnson, Architect and all rights thereto are Reserved. For exceptions, refer to the Owner-Architect Agreement.

CONSULTANT

RMF ENGINEERING, INC.
301 McCullough Drive, Suite 400
Charlotte, NC 28262

REGISTRATION

RMF ENGINEERING, INC. P.A. CERT. NO. C-1125 RALEIGH, N.C.
NORTH CAROLINA PROFESSIONAL SEAL 041471 ENGINEER BLAKE A. SMITH

Aug 5 2016

ISSUE

No.	Date	Description

SHEET INFO

PLUMBING DETAILS

P701

PROJECT NO: P1423.00
DATE: MAY 16, 2016
CONSTRUCTION DOCUMENTS

PLUMBING FIXTURE SCHEDULE

DESIG	FIXTURE	ROUGH-IN CONNECTION				FIXTURE UNITS			REMARKS
		CW	HW	SAN	VENT	CW	HW	SAN	
P-1	WATER CLOSET	1 1/2"		4"	2"	10		4	AMERICAN STANDARD AFWALL FLOWISE 2859.128, WES-111 DUAL FLUSH FLUSHOMETER
P-1A	WATER CLOSET	1 1/2"		4"	2"	10		4	AMERICAN STANDARD AFWALL FLOWISE 2859.128, WES-111 DUAL FLUSH FLUSHOMETER
P-2	URINAL	1"		2"	2"	10		2	KOHLER DEXTER K-5452-ET, ZURN AQUAFLUSH Z6003
P-3	LAVATORY	1/2"	1/2"	1 1/2"	1 1/2"	1.5	1.5	1	KOHLER VERTICYL K-2882, DELTA ARA 3567
P-4	SHOWER	3/4"	3/4"			3	3	2	ZURN TEMP-GARD SHOWER UNIT Z7101-SS-LH-HW-DV-2P
P-5	WALL HYDRANT	3/4"				1			ZURN CERAMIC DISC WALL HYDRANT Z1333
P-7	MOP SINK	3/4"	3/4"	3"	2"	2.25	2.25	2	FIAT TERRAZZO TSBC6010, CHICAGO FAUCETS 782-VBISCP
P-8	HAND SINK	1/2"	1/2"	1 1/2"	2"	1	1	1	KOHLER STACCATO K-3363, DELTA TRINSIC 1159LF
P-9	WALL BOX	1/2"				0.25			IPS STAINLESS STEELBOX SSIB2
P-10	WATER COOLER	1/2"		1 1/2"	1 1/2"	1.5		0.5	ELKAY LRPBGRNM28K

1. ALL KITCHEN EQUIPMENT CONNECTIONS TO POTABLE WATER SOURCES SHALL BE PROTECTED BY BACKFLOW PREVENTORS PER NORTH CAROLINA PLUMBING CODE AND LOCAL AHJ. BACKFLOW PREVENTORS SHALL BE SIMILAR TO ASSE 1022. INSTALL BACKFLOW PREVENTORS IN A VISIABLE AND ACCESSABLE AREA. PIPE VENT TO CLOSEST FLOOR SINK.

WATER HEATER SCHEDULE

DESIGNATION	TYPE	DIMENSIONS	STORAGE (GAL)	RECOVERY (GPH)	TEMP IN (°F)	TEMP OUT (°F)	BTU/h REQM'T	POWER REQM'T (KW)	VOLTAGE	PHASE	BASIS OF DESIGN	REMARKS
WH	ELECTRIC	60 1/4"H X 25 1/2"W X 31"D	62.4	31	55 °F	140 °F	30.7	9	480	3	AO SMITH DRE-80-9	

PUMP SCHEDULE

DESIG	DUTY	GPM	MOTOR		HEAD FEET / H2O	SUCTION x DISCHARGE	RPM	EFFICIENCY	ELECTRICAL	REMARKS
			BHP	HP						
RP-1	HW RECIRCULATION	0.4 GPM	-	1/40	0.6	3/4" x 3/4"	3250	-	115/60/1	

EXPANSION TANK SCHEDULE

MARK	SYSTEM	MANUFACTURER	MODEL	SYSTEM VOLUME (GAL)	RELIEF VALVE PRESSURE (PSIG)	MINIMUM TANK VOLUME (GAL)	REMARKS
DWET-1	DOMESTIC HOT WATER	B&G	PTA-5	8	125	1	1,2,3,4

1. DOMESTIC HOT MAXIMUM WORKING PRESSURE IS 150 PSIG.
2. BASED ON 40F ENTERING WATER, 140F LEAVING.
3. PROVIDE STEEL TANK WITH INTERNAL BUTYL BLADDER/DIAPHRAGM WITH POLYPROPLENE LINER, PRECHARGED TO 55 PSIG.
4. SHALL BE CONSTRUCTED TO ASME SECTION VIII DIVISION 1.

DRAIN SCHEDULE

DESIGNATION	DRAIN SIZE
RD-2	4" ROOF DRAIN
RD/OD	4" ROOF/OVER FLOW DRAIN COMBINATION
FD-1	3" FLOOR DRAIN
FD-2	3" SHOWER DRAIN
HD-2	3" HUB DRAIN
FS-2	3" FLOOR SINK

SHOCK ARRESTOR SCHEDULE

DESIGNATION	FIXTURE UNITS SERVED
SA - "A"	1-11
SA - "B"	12-32
SA - "C"	33-68
SA - "D"	61-113

CLIENT AND PROJECT

NORTH CAROLINA DEPARTMENT OF TRANSPORTATION

SCO ID NO.: 14-11006-01A

NEW DIVISION 8 OFFICE BUILDING

150 DOT DRIVE
CARTHAGE, NC 28327

DESIGNER

ANDRE JOHNSON ARCHITECT

PO BOX 14637
RALEIGH, NORTH CAROLINA 27620
TELEPHONE: 919.661.6935
MAIL: info@andrejohnsonarchitect.com

© 2015 Andre Johnson Architect, PLLC
Duplication or reproduction by any means without the express written consent of Andre L. Johnson, Architect is a violation of Federal and international law. The information contained on this document is the intellectual property of Andre L. Johnson, Architect and all rights thereto are Reserved. For exceptions, refer to the Owner-Architect Agreement.

CONSULTANT

RMF ENGINEERING, INC.
301 McCullough Drive, Suite 400
Charlotte, NC 28262

REGISTRATION

RMF ENGINEERING, INC. CERT. NO. C-1125 RALEIGH, N.C.
NORTH CAROLINA PROFESSIONAL SEAL 041471 ENGINEER BLAKE A. SMITH

Aug 5 2016

ISSUE

No.	Date	Description

SHEET INFO

PLUMBING SCHEDULES

P800

PROJECT NO: P1423.00
DATE: MAY 16, 2016

CONSTRUCTION DOCUMENTS

MECHANICAL SYMBOLS

EQUIPMENT DESIGNATIONS

SYMBOL	DESCRIPTION
AC-X	AIR COMPRESSOR DESIGNATION
ACC-X	AIR COOLED CHILLER DESIGNATION
ACCU-X	AIR COOLED CONDENSING UNIT DESIGNATION
ACU-X	AIR CONDITIONING UNIT DESIGNATION
AD-X	AIR DRYER DESIGNATION
AHU-X	AIR HANDLING UNIT DESIGNATION
AMD-X	AIRFLOW MONITORING DEVICE DESIGNATION
AS-X	AIR SEPARATOR DESIGNATION
B-X	BOILER DESIGNATION
CAD-X	COMPRESSED AIR DRYER DESIGNATION
CC-X	COOLING COIL DESIGNATION
CCP-X	COIL CIRCULATING PUMP DESIGNATION
CFP-X	CHEMICAL FEED PUMP DESIGNATION
CH-X	CHILLER DESIGNATION
CHP-X	CHILLED WATER PUMP DESIGNATION
CHX-X	CHILLED WATER HEAT EXHANGER DESIGNATION
CRU-X	CONDENSATE RETURN UNIT DESIGNATION
CUH-X	CABINET UNIT HEATER DESIGNATION
CWP-X	CONDENSER WATER PUMP DESIGNATION
CT-X	COMBUSTION TURBINE DESIGNATION
CT-X	COOLING TOWER DESIGNATION
DA-X	DEAERATOR DESIGNATION
DHC-X	DUCT HEATING COIL DESIGNATION
EDHC-X	ELECTRIC DUCT HEATING COIL DESIGNATION
EF-X	EXHAUST FAN DESIGNATION
ET-X	EXPANSION TANK DESIGNATION
EUH-X	ELECTRIC UNIT HEATER DESIGNATION
F-X	FILTER DESIGNATION
FCU-X	FAN COIL UNIT DESIGNATION
FOP-X	FUEL OIL PUMP DESIGNATION
FTR-X	FINNED TUBE RADIATION DESIGNATION
FWP-X	FEEDWATER PUMP DESIGNATION
G-X	GENERATOR DESIGNATION
GEF-X	GENERAL EXHAUST FAN DESIGNATION
H-X	HUMIDIFIER DESIGNATION
HRC-X	HEAT RECOVERY COIL DESIGNATION
HRSG-X	HEAT RECOVERY STEAM GENERATOR DESIGNATION
HRW-X	HEAT RECOVERY WHEEL DESIGNATION
HWP-X	HEATING WATER PUMP DESIGNATION
HX-X	HEAT EXCHANGER DESIGNATION
HVU-X	HEATING AND VENTILATING UNIT DESIGNATION
LEF-X	LABORATORY EXHAUST FAN DESIGNATION
LGE-X	LOUVERED GRAVITY EXHAUST DESIGNATION
MAU-X	MAKEUP AIR UNIT DESIGNATION
PCHP-X	PRIMARY CHILLED WATER PUMP DESIGNATION
PCP-X	PUMP CONTROL PANEL DESIGNATION
PHC-X	PRIMARY HEATING COIL DESIGNATION
PHWP-X	PRIMARY HEATING WATER PUMP DESIGNATION
PHE-X	PLATE HEAT EXCHANGER DESIGNATION
RF-X	RETURN FAN DESIGNATION
RPU-X	REFRIGERANT PUMPOUT UNIT DESIGNATION
RTU-X	ROOFTOP AIR HANDLING UNIT DESIGNATION
SA-X	SOUND ATTENUATOR DESIGNATION
SC-X	SURFACE CONDENSER DESIGNATION
SCHP-X	SECONDARY CHILLED WATER PUMP DESIGNATION
SEF-X	SMOKE EXHAUST FAN DESIGNATION
SF-X	SUPPLY FAN DESIGNATION
SG-X	STEAM GENERATOR DESIGNATION
SHWP-X	SECONDARY HEATING WATER PUMP DESIGNATION
SPSS-X	STATIC PRESSURE SENSOR DESIGNATION
SS-X	SIDESTREAM SEPERATOR DESIGNATION
ST-X	STEAM TRAP DESIGNATION
TEF-X	TOILET EXHAUST FAN DESIGNATION
V-X	VALVE DESIGNATION
VF-X	VENTILATION FAN DESIGNATION

PIPING SYMBOLS

SYMBOL	DESCRIPTION
BBD	BOILER BLOWDOWN
BCWR	BEARING COOLING WATER RETURN
BCWS	BEARING COOLING WATER SUPPLY
BO	BLOW OFF
CC	CAMPUS CONDENSATE
CF	CHEMICAL FEED
CHR	CHILLED WATER RETURN
CHS	CHILLED WATER SUPPLY
CS	CLEAN STEAM
A	COMPRESSED AIR
CD	CONDENSATE DRAIN
CWR	CONDENSER WATER RETURN
CWS	CONDENSER WATER SUPPLY
CA	CONTROL AIR
CBD	CONTINUOUS BLOWDOWN
DTR	DUAL TEMPERATURE RETURN
DTS	DUAL TEMPERATURE SUPPLY
FWR	FEED WATER RETURN
FWS	FEED WATER SUPPLY
FOF	FUEL OIL FILL
FOO	FUEL OIL OVERFLOW
FOR	FUEL OIL RETURN
FOS	FUEL OIL SUPPLY
FOT	FUEL OIL TRANSFER
FOV	FUEL OIL VENT
GHR	GLYCOL HEATING RETURN
GHS	GLYCOL HEATING SUPPLY
HRR	HEAT RECOVERY RETURN
HRS	HEAT RECOVERY SUPPLY
HR	HEATING WATER RETURN
HS	HEATING WATER SUPPLY
HPR	HIGH PRESSURE STEAM RETURN
HPS	HIGH PRESSURE STEAM SUPPLY
HTHR	HIGH TEMPERATURE HEATING WATER RETURN
HTHS	HIGH TEMPERATURE HEATING WATER SUPPLY
LPR	LOW PRESSURE STEAM RETURN
LPS	LOW PRESSURE STEAM SUPPLY
MPR	MEDIUM PRESSURE STEAM RETURN
MPS	MEDIUM PRESSURE STEAM SUPPLY
PA	PLANT AIR
PCWR	PROCESS COOLING WATER RETURN
PCWS	PROCESS COOLING WATER SUPPLY
PC	PUMPED CONDENSATE
PCR	PUMPED CONDENSATE RECIRCULATION
RL	REFRIGERANT LIQUID
RS	REFRIGERANT SUCTION
RV	REFRIGERANT VENT
RHR	REHEAT WATER RETURN
RHS	REHEAT WATER SUPPLY
TW	TREATED WATER

PIPING COMPONENTS AND SPECIATIES

SYMBOL	DESCRIPTION
	PIPE GUIDE
	PIPE HANGER
S	PIPE SLIDE
	PIPE ANCHOR
	FLOAT AND THERMOSTATIC STEAM TRAP
	THERMODYNAMIC STEAM TRAP
	STEAM SEPARATOR
S B	SOOTBLOWER VALVE
	NEEDLE VALVE (NORMALLY OPEN)
	NEEDLE VALVE (NORMALLY CLOSED)
	NON-RETURN ANGLE VALVE
	NON-RETURN STRAIGHT VALVE
	VENTURI EDUCTOR VALVE
	VENTURI FLOW METER
	QUICK OPENING VALVE
	BASKET STRAINER
	BELLOWS EXPANSION JOINT
	COMPRESSION / EXPANSION JOINT
	ELECTRICAL HEAT TRACE
	EXHAUST HEAD WITH SLASH BLOCK
R	REFRIGERANT LEAK DETECTION STROBE/HORN ALARM
CS/CU	CORROSION COUPON
	DUPLEX STRAINER
	FLEXIBLE PIPE
FM	FLOW METER
M	FLOW METER (WITH POSITIVE DISPLACEMENT)
	FLOW METER (PROBE STYLE)
	GOOSENECK VENT
	ORIFICE FITTING
	POSITIVE DISPLACEMENT FLOW INDICATOR
	SUCTION DIFFUSER
	TURBINE
	PUMP

FIRE RATED PARTITION LINETYPES

SYMBOL	DESCRIPTION
	PARTITION THAT LIMITS SMOKE TRANSMISSION
	1/2 HOUR FIRE PARTITION
	1 HOUR FIRE PARTITION
	2 HOUR FIRE PARTITION
	3 HOUR FIRE PARTITION
	1 HOUR FIRE AND SMOKE BARRIER
	2 HOUR FIRE AND SMOKE BARRIER

DUCTWORK SYMBOLS

SYMBOL	DESCRIPTION
H	HUMIDITY SENSOR
T	TEMPERATURE SENSOR
C	CARBON DIOXIDE SENSOR
	DUCT SMOKE DETECTOR
	SMOKE DETECTOR (IONIZATION)
	AIR FLOW
100 CFM	TRANSFER AIR FLOW (CFM INDICATED)
DL	DOOR LOUVER
UCD	UNDERCUT DOOR
	SUPPLY AIR DIFFUSER
	RETURN AIR GRILLE
	EXHAUST AIR GRILLE
	CIRCULAR AIR DIFFUSER
AMS	AIRFLOW MONITORING DEVICE
SPS	STATIC PRESSURE SENSING STATION
FD	FIRE DAMPER
FSD	COMBINATION FIRE / SMOKE DAMPER
VD	VOLUME DAMPER
BDD	BACK DRAFT DAMPER
	AUTOMATIC ISOLATION DAMPER
	AUTOMATIC GAS TIGHT ISOLATION DAMPER
	MANUAL GAS TIGHT ISOLATION DAMPER
SD	SMOKE DAMPER
DD	SMOKE DETECTOR
C	CARBON DIOXIDE
	FLEXIBLE CONNECTION
	DUCTWORK W/ SOUND LINING
	HORIZONTAL ACCESS DOOR
	VERTICAL ACCESS DOOR
	ELBOW W/ DOUBLE THICKNESS TURNING VANES
	RECTANGULAR BRANCH TAKE-OFF
	BELL MOUTH BRANCH TAKE-OFF
	ROUND BRANCH TAKE-OFF
	ROUND DUCT DROP OFF BOTTOM
	DUCT TRANSITION
	SQUARE TO ROUND TRANSITION
UP/DN	DUCTWORK CHANGE IN ELEVATION (UP OR DOWN)
	SUPPLY / OUTSIDE AIR DUCT RISER
	RETURN AIR DUCT RISER
	EXHAUST / RELIEF AIR DUCT RISER
	ROUND DUCT RISER
	ALL WELDED VEHICLE EXHAUST DUCT CONNECTION
MAINTANENCE ACCESS AREA	TERMINAL UNIT
MAINTANENCE ACCESS AREA	TERMINAL UNIT WITH REHEAT COIL
MAINTANENCE ACCESS AREA	TERMINAL UNIT W/ ATTENUATOR AND REHEAT COIL
MAINTANENCE ACCESS AREA	EXHAUST TERMINAL UNIT
X	SUPPLY AIR VOLUME TERMINAL UNIT IDENTIFIER
X	EXHAUST AIR TERMINAL UNIT IDENTIFIER

MECHANICAL ABBREVIATIONS

NOTE: THIS IS A STANDARD ABBREVIATION LIST. SOME ABBREVIATIONS MAY NOT APPEAR ON THE ACCOMPANYING DRAWINGS.

#	NUMBER, POUND
$	DOLLAR
%	PERCENT
&	AND
+	PLUS
-	MINUS
/	DIVIDE BY, PER
<	LESS THAN
=	EQUALS, EQUAL TO
>	GREATER THAN
x	MULTIPLY BY, BY
x"	INCHES, INCH
x'	FEET, FOOT
±	PLUS OR MINUS
≤	LESS THAN OR EQUAL TO
≥	GREATER THAN OR EQUAL TO
@	AT
AAV	AUTOMATIC AIR VENT
ACV	AUTOMATIC CONTROL VALVE
AD	ACCESS DOOR, AREA DRAIN
AFF	ABOVE FINISHED FLOOR
ATC	AUTOMATIC TEMPERATURE CONTROL
BAS	BUILDING AUTOMATION SYSTEM
BBD	BOILER BLOWDOWN
BCWR	BEARING COOLING WATER RETURN
BCWS	BEARING COOLING WATER SUPPLY
BDD	BACKDRAFT DAMPER
BFP	BACKFLOW PREVENTER
BHP	BRAKE HORSEPOWER
BMS	BUILDING MANAGEMENT SYSTEM
BO	BLOW OFF
BTU	BRITISH THERMAL UNIT
BTUH	BRITISH THERMAL UNIT PER HOUR
BV	BALANCING VALVE
CA	CONTROL AIR
CBD	CONTINUOUS BLOWDOWN
CC	CAMPUS CONDENSATE
CCMS	CENTRAL CONTROL AND MONITORING SYSTEM
CD	CONDENSATE DRAIN
CFM	CUBIC FEET PER MINUTE
CHEL	CHELANT
CHR	CHILLED WATER RETURN
CHS	CHILLED WATER SUPPLY
CHX	CHILLED WATER HEAT EXCHANGER
CO	CLEANOUT
CO2	CARBON DIOXIDE
CS	CLEAN STEAM
CT	COMBUSTION TURBINE
CW	COLD WATER, DOMESTIC CITY WATER
CWR	CONDENSER WATER RETURN
CWS	CONDENSER WATER SUPPLY
°C	DEGREE(S) CELSIUS
D	DEEP, DRAIN WATER
DB	DECIBEL, DRY BULB
DDC	DIRECT DIGITAL CONTROL
DESIG	DESIGNATION
DHR	DISTRIBUTION HEATING WATER RETURN
DHS	DISTRIBUTION HEATING WATER SUPPLY
DHWR	DOMESTIC HOT WATER RETURN
DHWS	DOMESTIC HOT WATER SUPPLY
DIA, Ø	DIAMETER
DIR	DEIONIZED WATER RETURN
DIS	DEIONIZED WATER SUPPLY
DL	DOOR LOUVER
DN	DOWN
DSP	DRY SPRINKLER PIPE
DTR	DUAL TEMPERATURE RETURN
DTS	DUAL TEMPERATURE SUPPLY
DW	DISTILLED WATER
EA	EXHAUST AIR
EAT	ENTERING AIR TEMPERATURE
ED	EQUIPMENT DRAIN
EJ	EXPANSION JOINT
ELEV	ELEVATION
EMS	ENERGY MANAGEMENT SYSTEM
EQ	EQUIPMENT, EQUALIZING
ESP	EXTERNAL STATIC PRESSURE
EWT	ENTERING WATER TEMPERATURE
EX	EXISTING
F&T	FLOAT AND THERMOSTATIC TRAP
FC	FLEXIBLE CONNECTION
FD	FIRE DAMPER, FOUNDATION DRAIN
FDR	FLOOR DRAIN
FDV	FIRE DEPARTMENT VALVE
FF	FINISHED FLOOR
FFE	FINISHED FLOOR ELEVATION
FIN/FT	FINS PER FOOT
FIN/INCH	FINS PER INCH
FM	FLOWMETER
FMF	FLOWMETER FITTING
FO	FUEL OIL
FOF	FUEL OIL FILL
FOO	FUEL OIL OVERFLOW
FOR	FUEL OIL RETURN
FOS	FUEL OIL SUPPLY
FOSUCT	FUEL OIL SUCTION
FOT	FUEL OIL TRANSFER
FOTP	FUEL OIL TRANSFER PUMP
FOV	FUEL OIL VENT
FPM	FEET PER MINUTE
FPS	FEET PER SECOND
FS	FLOW SWITCH
FT	FOOT, FEET
FW	FEED WATER
FWR	FEED WATER RECIRCULATION
FWS	FEED WATER SUCTION
°F	DEGREE(S) FAHRENHEIT
GPM	GALLONS PER MINUTE

H	HIGH
HB	HOSE BIB
HED	HOSE END DRAIN VALVE
HP	HORSEPOWER
HPR	HIGH PRESSURE STEAM RETURN
HPS	HIGH PRESSURE STEAM SUPPLY
HR	HEATING WATER RETURN
HRR	HEAT RECOVERY RETURN
HRS	HEAT RECOVERY SUPPLY
HRSG	HEAT RECOVERY STEAM GENERATOR
HS	HEATING WATER SUPPLY
HT	HEIGHT
HTHR	HIGH TEMPERATURE HEATING WATER RETURN
HTHS	HIGH TEMPERATURE HEATING WATER SUPPLY
HW	HOT WATER
HWR	HOT WATER RECIRCULATION
HWR	HEATING WATER RETURN
HWS	HEATING WATER SUPPLY
HZ	HERTZ
IA	INSTRUMENT AIR
ICW	INDUSTRIAL COLD WATER
IHR	INDUSTRIAL HOT WATER RECIRCULATION
IHW	INDUSTRIAL HOT WATER
IN	INCH, INCHES
INV EL	INVERT ELEVATION
KW	KILOWATTS
L	LONG, LENGTH
LA	LABORATORY AIR
LAT	LEAVING AIR TEMPERATURE
LBS	POUNDS
LBS/HR	POUNDS PER HOUR
LN	LIQUID NITROGEN
LP	LIQUID PROPANE
LPG	LIQUID PETROLEUM GAS
LPR	LOW PRESSURE STEAM RETURN
LPS	LOW PRESSURE STEAM SUPPLY
LV	LABORATORY VENT, LABORATORY VACUUM
LW	LABORATORY WASTE
LWT	LEAVING WATER TEMPERATURE
MA	MEDICAL AIR
MAV	MANUAL AIR VENT
MAX	MAXIMUM
MBH	THOUSAND BRITISH THERMAL UNITS PER HOUR
MCC	MOTOR CONTROL CENTER
MEQ	MECHANICAL EQUIPMENT
MH-#	MANHOLE
MIN	MINIMUM
MISC	MISCELLANEOUS
MO	MOTOR OIL PIPING
MOD	MOTOR OPERATED DAMPER
MPR	MEDIUM PRESSURE STEAM RETURN
MPS	MEDIUM PRESSURE STEAM SUPPLY
MV	MEDICAL VACUUM
N	NITROGEN
NA, N/A	NOT APPLICABLE
NC	NOISE CRITERIA, NORMALLY CLOSED
NFPA	NATIONAL FIRE PROTECTION ASSOCIATION
NG	NATURAL GAS
NO	NORMALLY OPEN, NITROUS OXIDE
No	NUMBER
NOM	NOMINAL
NPSH	NET POSITIVE SUCTION HEAD
NPW	NON-POTABLE WATER
O	OXYGEN
OA	OUTSIDE AIR
OD	OVERFLOW DRAIN
OED	OPEN ENDED DUCT
OF	OVERFLOW

OS&Y	OUTSIDE STEM AND YOKE
P&ID	PROCESS AND INSTRUMENTATION DIAGRAM
PA	PLANT AIR
PC	PUMPED CONDENSATE
PCHR	PRIMARY CHILLED WATER RETURN
PCHS	PRIMARY CHILLED WATER SUPPLY
PCP	PUMP CONTROL PANEL
PCR	PUMPED CONDENSATE RECIRCULATION
PCWR	PROCESS COOLING WATER RETURN
PCWS	PROCESS COOLING WATER SUPPLY
PD	PRESSURE DROP, PUMP DISCHARGE
PG	PILOT GAS
PGR	PROCESS GLYCOL WATER RETURN
PGS	PROCESS GLYCOL WATER SUPPLY
PH	PHASE
PHR	PRIMARY HEATING RETURN
PHS	PRIMARY HEATING SUPPLY
PIV	POST INDICATING VALVE
PPH	POUNDS PER HOUR
PRV	PRESSURE REDUCING VALVE, PRESSURE REGULATING VALVE
PSI	POUNDS PER SQUARE INCH
PSIG	POUNDS PER SQUARE INCH GAUGE
PW	POTABLE WATER
RA	RETURN AIR, RELIEF AIR
RAF	RETURN AIR FAN
RD	REFRIGERANT DISCHARGE
RDR	ROOF DRAIN
RH	RELATIVE HUMIDITY
RHR	REHEAT WATER RETURN
RHS	REHEAT WATER SUPPLY
RI	REMOVE AND REINSTALL
RL	REFRIGERANT LIQUID
ROR	REVERSE OSMOSIS WATER RETURN
ROS	REVERSE OSMOSIS WATER SUPPLY
RPM	REVOLUTIONS PER MINUTE
RS	REFRIGERANT SUCTION
RV	RELIEF VENT, REFRIGERANT VENT
RX	REMOVE EXISTING
SA	SUPPLY AIR
SA	SHOCK ARRESTOR
SAN	SANITARY, SOIL, WASTE
SCHR	SECONDARY CHILLED WATER RETURN
SCHS	SECONDARY CHILLED WATER SUPPLY
SD	STORM DRAIN, SMOKE DETECTOR
SF	SQUARE FOOT
SHR	SECONDARY HEATING WATER RETURN
SHS	SECONDARY HEATING WATER SUPPLY
SL	SOUND LINING
SP	STATIC PRESSURE
SPR	SPRINKLER LINE
SQ FT	SQUARE FOOT
SS	STAINLESS STEEL
SSUL	SODIUM SULFITE
STDR	STORM DRAIN
SW	SOFT WATER
TS	TAMPER SWITCH
TSP	TOTAL STATIC PRESSURE
TW	TREATED WATER
TWR	TEMPERED WATER RETURN
TWS	TEMPERED WATER SUPPLY
TYP	TYPICAL
ΔT	TEMPERATURE DIFFERENCE
V	VACUUM, VOLTS
VD	VOLUME DAMPER
VENT	VENTILATION
VFD	VARIABLE FREQUENCY DRIVE
VPD	VACUUM PUMP DISCHARGE
VSD	VARIABLE SPEED DRIVE
VTR	VENT THROUGH ROOF

CLIENT AND PROJECT

NORTH CAROLINA DEPARTMENT OF TRANSPORTATION

SCO ID NO.: 14-11006-01A

NEW DIVISION 8 OFFICE BUILDING

150 DOT DRIVE
CARTHAGE, NC 28327

DESIGNER

ANDRE JOHNSON ARCHITECT

PO BOX 14637
RALEIGH, NORTH CAROLINA 27620
TELEPHONE: 919.661.6935
MAIL: info@andrejohnsonarchitect.com

© 2015 Andre Johnson Architect, PLLC
Duplication or reproduction by any means without the express written consent of Andre L. Johnson, Architect is a violation of Federal and international law. The information contained on this document is the intellectual property of Andre L. Johnson, Architect and all rights thereto are Reserved. For exceptions, refer to the Owner-Architect Agreement.

CONSULTANT

RMF ENGINEERING, INC.
301 McCullough Drive, Suite 400
Charlotte, NC 28262

REGISTRATION

RMF ENGINEERING, INC. CERT. NO. C-1125 ENGINEERING

NORTH CAROLINA PROFESSIONAL SEAL 041471 ENGINEER BLAKE A. SMITH

Aug 5 2016

ISSUE

No.	Date	Description

SHEET INFO

MECHANICAL NOTES, SYMBOLS, AND ABBREVIATIONS

M001

PROJECT NO: P1423.00
DATE: AUGUST 5, 2016
BID DOCUMENTS

HVAC GENERAL NOTES

1 COMPLY WITH ALL APPLICABLE INTERNATIONAL BUILDING CODES FOR ALL WORK UNDER THIS CONTRACT.

2 MAXIMUM, MINIMUM CFM AND RE-HEATING FOR VAV BOXES ARE AS INDICATED ON THE VAV UNIT SCHEDULE. IF NOT INDICATED, SET THE MINIMUM CFM TO 50% OF THE MAXIMUM CFM.

3 PRESSURE DEPENDENT VAV BOXES SHALL NOT BE USED.

4 ALL VAV BOXES SHALL BE PROVIDED WITH A MINIMUM OF THREE (3) DUCT DIAMETERS OF STRAIGHT DUCT RUN AT THE INLET. INLET DUCT SHALL BE EQUAL OR LARGER THAN THE BOX INLET SIZE.

5 PROVIDE, AT EACH FAN COIL UNIT, A WATER LEVEL PROTECTION DEVICE THAT CONFORMS TO UL508 THAT WILL SHUT-OFF THE FCU IF THE PRIMARY DRAIN IS BLOCKED. THE DEVICE SHALL BE INSTALLED IN THE PRIMARY DRAIN LINE CONNECTION AND BELOW THE OVERFLOW RIM OF SUCH PAN IN ACCORDANCE WITH THE APPLICABLE MECHANICAL CODE.

6 SIZE REFRIGERANT PIPING IN ACCORDANCE WITH MANUFACTURER'S WRITTEN INSTRUCTIONS BASED ON THE PROJECT SPECIFIC LAYOUT AND LENGTH OF REFRIGERANT PIPING. REFER TO SERIES DRAWINGS FOR ADDITIONAL INFORMATION.

7 FABRICATE ALL DUCTWORK IN ACCORDANCE WITH SMACNA STANDARDS. ALL DUCTWORK SHALL BE A MINIMUM OF 26 GAUGE.

8 PROVIDE ACCESS DOORS IN DUCTWORK TO SERVICE FIRE DAMPERS & DEVICES WITHIN DUCTS.

9 PROVIDE ACCESS DOORS IN INACCESSIBLE CEILINGS TO ACCESS MEP DEVICES ABOVE CEILINGS NOT OTHERWISE ACCESSIBLE.

10 INSTALL FLEXIBLE DUCTS IN ACCORDANCE WITH SMACNA STANDARDS AND PROJECT SPECIFICATIONS.

11 MAXIMUM ALLOWED FLEXIBLE DUCT LENGTH SHALL BE SIX (6) FEET.

12 PROVIDE MANUAL VOLUME DAMPERS AT EACH DUCT BRANCH LEADING TO AN OUTLET/INLET OPENING. INSTALL DAMPERS AS FAR AS POSSIBLE AWAY FROM THE DIFFUSER.

13 DUCT PRESSURE CLASSIFICATION SHALL BE AS INDICATED ON THE DRAWINGS AND SPECIFICATIONS. IF NOT INDICATED, IT SHALL BE AS FOLLOWS:
a.SUPPLY DUCTS UPSTREAM OF VAV BOXES:6" POSITIVE
b.SUPPLY DUCTS DOWNSTREAM OF VAV BOXES:2" POSITIVE
c.RETURN DUCTS: 2" NEGATIVE
d.EXHAUST DUCTS: 2" NEGATIVE

14 REFER TO AIR DEVICE SCHEDULE FOR INLET DUCT SIZES UNLESS OTHERWISE INDICATED.

15 REFER TO ARCHITECTURAL REFLECTED CEILING PLANS FOR EXACT LOCATION OF CEILING AIR DEVICES.

16 VERIFY REFLECTED CEILING PLANS IN THE FIELD FOR EXACT LAYOUT LOCATION OF ALL CEILING GRILLES & DIFFUSERS, COORDINATE WITH ALL OTHER TRADES FOR THEIR LAYOUTS.

17 REFER TO ARCHITECTURAL PLANS FOR EXACT LOCATIONS AND DETAILS OF EXTERIOR WALL LOUVERS AND ROOF PENETRATION CURBS.

18 PROVIDE 1/2" x 1/2" STAINLESS STEEL BIRD SCREEN ON THE INSIDE FACE OF ALL OUTSIDE LOUVERS.

19 COORDINATE FINAL EQUIPMENT/FIXTURE LOCATIONS WITH THE GENERAL CONTRACTOR. THE LOCATION AS INDICATED ON THE DRAWING IS APPROXIMATE. INSTALL ALL MECHANICAL EQUIPMENT SUCH THAT MANUFACTURER'S MAINTENANCE AREA IS CLEAR.

20 COORDINATE ALL ROOF PENETRATION SIZES AND LOCATIONS WITH APPROVED EQUIPMENT SHOP DRAWINGS.

21 ALL ROOFTOP EQUIPMENT SHALL BE INSTALLED A MINIMUM OF 10'-0" FROM THE INSIDE OF PARAPET WALL IN ACCORDANCE WITH THE APPLICABLE MECHANICAL CODE.

22 COORDINATE ALL MECHANICAL, PLUMBING AND ELECTRICAL WORK & EQUIPMENT WITH STRUCTURAL MEMBERS, ELECTRICAL WORK, FIXTURES AND ALL OTHER TRADES.

23 DO NOT ROUTE ANY WET PIPING THROUGH ELECTRICAL, COMMUNICATION OR ELEVATOR EQUIPMENT ROOMS.

24 RUN ALL PIPING CONCEALED ABOVE CEILING EXCEPT WHERE INDICATED.

25 PROVIDE MANUAL AIR VENTS AT ALL HIGH POINTS & DRAIN VALVES WITH CAPPED HOSE CONNECTIONS AT ALL LOW POINTS OF PIPING SYSTEMS.

26 PROVIDE INSULATED TRAPPED CONDENSATION DRAIN PIPING, WITH AIR GAPS, FROM COOLING COIL DRAIN PANS TO NEAREST FLOOR DRAIN, STORM DRAIN OR TO OUTSIDE AS INSTRUCTED BY THE ENGINEER.

27 DRAIN ALL CONDENSATE DRAIN PANS WITH INSULATED, TRAPPED PIPING AS INDICATED OR, WHERE NOT INDICATED, AS DIRECTED BY THE ENGINEER ON SITE.

28 PROVIDE FLEXIBLE DUCT FLEXIBLE CONNECTION BETWEEN EACH DUCT FAN CONNECTION.

29 PROVIDE VFD'S, STARTERS AND DISCONNECT SWITCHES FOR ALL MECHANICAL EQUIPMENT WHICH COMPLY WITH SPECIFICATIONS FOR MANUFACTURER, QUALITY, CONFORMANCE AND OPTIONS.

30 GAS MAIN PRESSURE WILL BE 5 PSI. PROVIDE GAS REGULATORS FOR EACH GAS-FIRED EQUIPMENT, IN CONFORMANCE WITH THE REQUIREMENTS OF THE EQUIPMENT MANUFACTURER.

31 PROVIDE FIRE/SMOKE DAMPERS AT ALL DUCT PENETRATIONS OF ALL FIRE/SMOKE RATED ASSEMBLIES, TO MAINTAIN THE INTEGRITY OF THE ASSOCIATED FIRE/SMOKE ASSEMBLY.

32 FIRESTOP/SMOKESTOP AND SLEEVE ALL PENETRATIONS THROUGH FIRE/SMOKE RATED ASSEMBLIES. REFER TO LIFE SAFETY PLANS FOR RATED ASSEMBLIES AND LOCATIONS.

33 INSTALL ALL DUCT SMOKE DETECTORS FURNISHED UNDER DIVISION 28 SPECIFICATIONS.

34 REGARDLESS OF HOW PIPING IS PRESENTED ON THE DRAWINGS, PROVIDE ECCENTRIC (FLAT ON TOP) REDUCERS IN HYDRONIC PIPING.

35 FOR CLARITY TEMPERATURE AND HUMIDITY SENSOR LOCATIONS ARE SHOWN ON THE PIPING DRAWINGS. COORDINATE FINAL THERMOSTAT LOCATIONS WITH INTERIOR FINISH AND FURNITURE EQUIPMENT DRAWINGS PRIOR TO INSTALLATION. MOUNT SENSORS 48" AFF TO THE TOP OF THE DEVICE. TYPICAL FOR ALL SENSORS.

CHILLED WATER CONTROL INSTRUMENTATION

INFRASTRUCTURE P&ID COMPONENTS AND SPECIALTIES

SYMBOL	DESCRIPTION
T	HAND ACTUATOR
P	VALVE ACTUATOR
S	VALVE ACTUATOR WITH HANDWHEEL
P	SELF CONTAINED BACKPRESSURE REGULATOR
P	PRESSURE REDUCING REGULATOR WITH EXTERNAL PRESSURE TAP
P	PRESSURE BALANCED DIAPHRAGM ACTUATOR
P	PRESSURE REDUCING REGULATOR WITH INTERNAL - EXTERNAL PRESSURE TAP
M	ROTARY MOTOR ACTUATOR
E	ELECTROHYDRAULIC ACTUATOR
D	DIGITAL ACTUATOR
S	SOLENOID ACTUATOR
X	UNCLASSIFIED ACTUATOR
	SPRING-OPPOSED SINGLE ACTING ACTUATOR
	DOUBLE ACTING ACTUATOR

INFRASTRUCTURE P&ID EQUIPMENT DESIGNATIONS

SYMBOL	DESCRIPTION
X X	SMART DISCRETE FIELD INSTALLED - FIELD DEVICE
X X	SMART DISCRETE ACCESSIBLE - FIELD DEVICE NORMALLY ACCESSIBLE TO OPERATOR
X X	SMART COMPUTER FUNCTION FIELD INSTALLED - COMPUTER FUNCTION ACCESSIBLE TO OPERATOR
X X	SMART COMPUTER FUNCTION ACCESSIBLE - DCS INDICATION
X X	SMART SHARED FIELD INSTALLED - PLC CONTROL OF FIELD DEVICE
X X	SMART SHARED ACCESSIBLE - DCS CONTROL OF PLC FUNCTION
X X	SMART PROGRAM LOGIC FIELD INSTALLED - PLC FIELD INSTALLED
X X	SMART PROGRAM LOGIC ACCESSIBLE - PLC ACCESSIBLE TO OPERATOR
X	SMART CONTROL INTERBLOCK
X X X	SHEET TAG

INFRASTRUCTURE P&ID LINETYPES

SYMBOL	DESCRIPTION
	SANITARY BELOW FLOOR
	PNEUMATIC SIGNAL LINE
	PNEUMATIC BINARY SIGNAL LINE
	ELECTRIC BINARY SIGNAL LINE
	ELECTRONIC INSTRUMENT SIGNAL
	MECHANICAL LINKAGE
	INTERNAL SYSTEM LINKAGE
	CAPILLARY TUBE
	HYDRAULIC SIGNAL

PROCESS AND INSTRUMENTATION DIAGRAM LEGEND

CHILLED WATER CONTROL INSTRUMENTATION

SYMBOL	DESCRIPTION
AL DI	ALARM
AI	ANALOG INPUT
AO	ANALOG OUTPUT
CV AO	CONTROL VALVE (ANALOG)
CV DO	CONTROL VALVE (DIGITAL)
CS DI	CURRENT SWITCH
CT AI	CURRENT TRANSMITTER
DA AO	DAMPER ACTUATOR (ANALOG)
DA DO	DAMPER ACTUATOR (DIGITAL)
DPS DI	DIFFERENTIAL PRESSURE SWITCH
DPT AI	DIFFERENTIAL PRESSURE TRANSMITTER
DI	DIGITAL INPUT
DO	DIGITAL OUTPUT
ES DI	END SWITCH
FD DI	FIRE DAMPER
FM AI	FLOW METER
FS DI	FLOW SWITCH
FZ DI	FREEZESTAT
HHLA DI	HIGH HIGH LEVEL ALARM
HLA DI	HIGH LEVEL ALARM
HPS DI	HIGH PRESSURE SWITCH
HIS DO	HIGH SPEED
LS DI	LEVEL SWITCH
LT AI	LEVEL TRANSMITTER
LAN	LOCAL AREA NETWORK CONNECTION
LLA DI	LOW LOW LEVEL ALARM
LLLA DI	LOW LEVEL ALARM
LPS DI	LOW PRESSURE SWITCH
LOS DO	LOW SPEED
MOD DO	MOTOR OPERATED DAMPER
ORP AI	OXIDATION REDUCTION POTENTIAL
POT AI	POSITION TRANSMITTER
PS DI	PRESSURE SWITCH
PT AI	PRESSURE TRANSMITTER
SD SPEED	SPEED CONTROLLER
SD DI	SMOKE DETECTOR
SS DO	START / STOP
TS DI	TEMPERATURE SWITCH
TT AI	TEMPERATURE TRANSMITTER
TDS AI	TOTAL DISSOLVED SOLIDS
VA AO	VALVE ACTUATOR (ANALOG)
VA DO	VALVE ACTUATOR (DIGITAL)
VFC AI	VARIABLE FREQUENCY CONTROLLER
VS DI	VIBRATION SWITCH

INFRASTRUCTURE ABBREVIATIONS

NOTE: THIS IS A STANDARD ABBREVIATION LIST. SOME ABBREVIATIONS MAY NOT APPEAR ON THE ACCOMPANYING DRAWINGS.

A	COMPRESSED AIR
BCWR	BEARING COOLING WATER RETURN
BCWS	BEARING COOLING WATER SUPPLY
BO	BLOW OFF
BTU	BRITISH THERMAL UNIT
BTUH	BRITISH THERMAL UNITS PER HOUR
CA	CONTROL AIR
CBD	CONTINUOUS BLOWDOWN
CC	CAMPUS CONDENSATE
CF	CHEMICAL FEED
CFM	CUBIC FEET PER MINUTE
CHEL	CHELANT
CHR	CHILLED WATER RETURN
CHS	CHILLED WATER SUPPLY
CO	CLEANOUT
CW	COLD WATER, DOMESTIC CITY WATER
DHR	DISTRIBUTION HEATING WATER RETURN
DHS	DISTRIBUTION HEATING WATER SUPPLY
DIA	DIAMETER
DW	DISTILLED WATER
EA	EXHAUST AIR
ED	EQUIPMENT DRAIN
EJ	EXPANSION JOINT
#2FOR	NUMBER 2 FUEL OIL RETURN
#2FOS	NUMBER 2 FUEL OIL SUPPLY
#6FOR	NUMBER 6 FUEL OIL RETURN
#6FOS	NUMBER 6 FUEL OIL SUPPLY
F	FIRE LINE
F&T	FLOAT AND THERMOSTATIC
FD	FORCED DRAFT
FDV	FIRE DEPARTMENT VALVE
FF	FINISHED FLOOR
FFE	FINISHED FLOOR ELEVATION
FOF	FUEL OIL FILL
FOO	FUEL OIL OVERFLOW
FOSUCT	FUEL OIL SUCTION
FOT	FUEL OIL TRANSFER
FOVENT	FUEL OIL VENT
FPM	FEET PER MINUTE
FPS	FEET PER SECOND
FW	FEED WATER
FWR	FEED WATER RECIRCULATION
FWS	FEED WATER SUPPLY
°F	DEGREES FAHRENHEIT
G	NATURAL GAS
GAL	GALLON, GALLONS
GPH	GALLONS PER HOUR
GPM	GALLONS PER MINUTE
HPR	HIGH PRESSURE STEAM RETURN
HPS	HIGH PRESSURE STEAM SUPPLY
HR	HEATING WATER RETURN
HRR	HEAT RECOVERY RETURN
HRS	HEAT RECOVERY SUPPLY
HS	HEATING WATER SUPPLY
HTHW	HIGH TEMPERATURE HEATING WATER SUPPLY
HTWR	HIGH TEMPERATURE HEATING WATER RETURN
HW	HOT WATER
HWR	HOT WATER RECIRCULATION
IA	INSTRUMENT AIR
KW	KILOWATTS
LP	LIQUID PROPANE
LPG	LIQUID PETROLEUM GAS
LPR	LOW PRESSURE STEAM RETURN
LPS	LOW PRESSURE STEAM SUPPLY
MAV	MANUAL AIR VENT
MBH	THOUSAND BRITISH THERMAL UNITS PER HOUR
MCC	MOTOR CONTROL CENTER
MOD	MOTOR OPERATED DAMPER
MPR	MEDIUM PRESSURE STEAM RETURN
MPS	MEDIUM PRESSURE STEAM SUPPLY
N/A	NOT APPLICABLE
NC	NORMALLY CLOSED
NO	NORMALLY OPEN
No	NUMBER
NPSH	NET POSITIVE SUCTION HEAD
OD	OVERFLOW DRAIN
PA	PLANT AIR
PC	PUMPED CONDENSATE
PCR	PUMP CONDENSATE RECIRCULATION
PPH	POUNDS PER HOUR
PSIG	POUNDS PER SQUARE INCH GAUGE
RA	RETURN AIR, RELIEF AIR
RDR	ROOF DRAIN
RPM	REVOLUTIONS PER MINUTE
RV	RELIEF VENT
RX	REMOVE EXISTING
SA	SUPPLY AIR
SAN	SANITARY
SS	STAINLESS STEEL
SSUL	SODIUM SULFITE
STDR	STORM DRAIN
SW	SOFT WATER
TW	TREATED WATER
TYP	TYPICAL
VD	VOLUME DAMPER
VFD	VARIABLE FREQUENCY DRIVE
VSD	VARIABLE SPEED DRIVE
VTR	VENT THROUGH ROOF

CLIENT AND PROJECT

NORTH CAROLINA DEPARTMENT OF TRANSPORTATION

SCO ID NO.: 14-11006-01A

NEW DIVISION 8 OFFICE BUILDING

150 DOT DRIVE
CARTHAGE, NC 28327

DESIGNER

ANDRE JOHNSON ARCHITECT
PO BOX 14637
RALEIGH, NORTH CAROLINA 27620
TELEPHONE: 919.661.6935
MAIL: info@andrejohnsonarchitect.com

© 2015 Andre Johnson Architect, PLLC
Duplication or reproduction by any means without the express written consent of Andre L. Johnson, Architect is a violation of Federal and international law. The information contained on this document is the intellectual property of Andre L. Johnson, Architect and all rights thereto are Reserved. For exceptions, refer to the Owner-Architect Agreement.

CONSULTANT

RMF ENGINEERING, INC.
301 McCullough Drive, Suite 400
Charlotte, NC 28262

REGISTRATION

RMF ENGINEERING, INC. CERT. NO. C-1125 RALEIGH, N.C.
NORTH CAROLINA PROFESSIONAL SEAL 041471 ENGINEER BLAKE A. SMITH

Aug 5 2016

ISSUE

No.	Date	Description

SHEET INFO

MECHANICAL NOTES, SYMBOLS, AND ABBREVIATIONS

M002

PROJECT NO: P1423.00
DATE: AUGUST 5, 2016
BID DOCUMENTS

WALL TYPE LEGEND

3A — WALL TYPE SYMBOL - REFER TO SHEET A500-A502 FOR WALL TYPE CONSTRUCTION & RATINGS

NEW UNRATED STUD WALL

GENERAL NOTES

1. DUCT SIZES NOT INDICATED ON DRAWING
   - MATCH SCHEDULED FPU INLET SIZE
   - MATCH SCHEDULED AIR DEVICE NECK SIZE

DRAWING NOTES

1. LOCATE EXHAUST GRILLE ABOVE COPIER
2. DUCT STATIC PRESSURE SENSOR

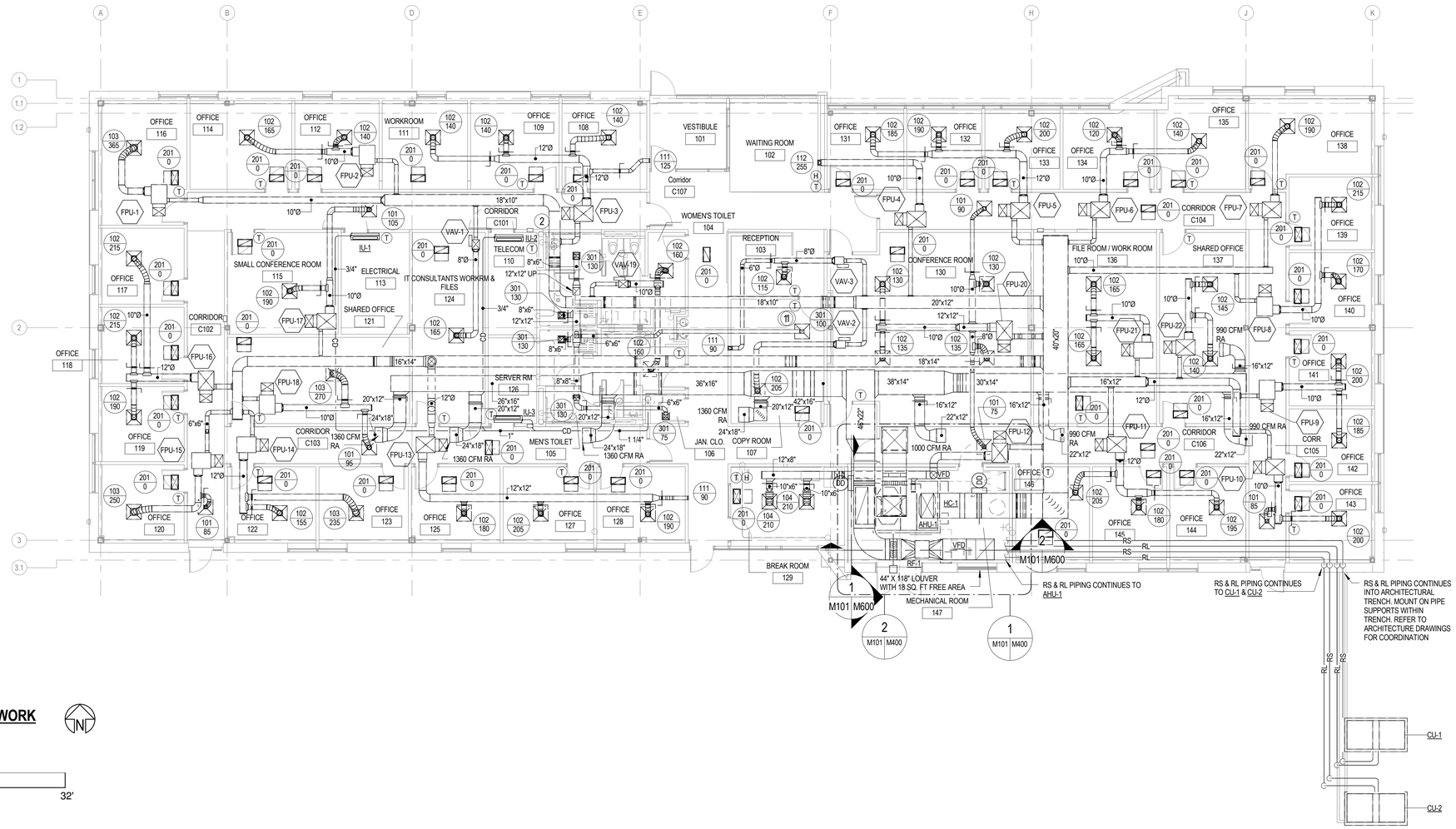

01 FLOOR LEVEL - DUCTWORK

1 / M600 M101

SCALE: 1/8" = 1'-0"

0' 4' 8' 16' 32'

CLIENT AND PROJECT

NORTH CAROLINA DEPARTMENT OF TRANSPORTATION

SCO ID NO.: 14-11006-01A

NEW DIVISION 8 OFFICE BUILDING

150 DOT DRIVE
CARTHAGE, NC 28327

DESIGNER

ANDRE JOHNSON ARCHITECT

PO BOX 14637
RALEIGH, NORTH CAROLINA 27620
TELEPHONE: 919.661.6935
MAIL: info@andrejohnsonarchitect.com

© 2015 Andre Johnson Architect, PLLC
Duplication or reproduction by any means without the express written consent of Andre L. Johnson, Architect is a violation of Federal and international law. The information contained on this document is the intellectual property of Andre L. Johnson, Architect and all rights thereto are Reserved. For exceptions, refer to the Owner-Architect Agreement.

CONSULTANT

RMF ENGINEERING, INC.
301 McCullough Drive, Suite 400
Charlotte, NC 28262

REGISTRATION

RMF ENGINEERING, INC. CERT. NO. C-1125 RALEIGH, N.C.

NORTH CAROLINA PROFESSIONAL SEAL 041471 ENGINEER BLAKE A. SMITH

Aug 5 2016

ISSUE

No.	Date	Description

SHEET INFO

FLOOR LEVEL - DUCTWORK

M101

PROJECT NO: P1423.00
DATE: AUGUST 5, 2016
BID DOCUMENTS

DRAWING NOTES

1. FURNISH PIPE CURB FOR REFRIGERANT PIPES AND ELECTICAL CONDUIT SERVING OUTDOOR UNIT. COORDINATE WITH ROOFING CONTRACTOR AND REFER TO ARCHITCTURAL
2. FURNISH EQUIPMENT RAILS. COORDINATE WITH ROOFING CONTRACTOR AND REFER TO ARCHITECTURAL

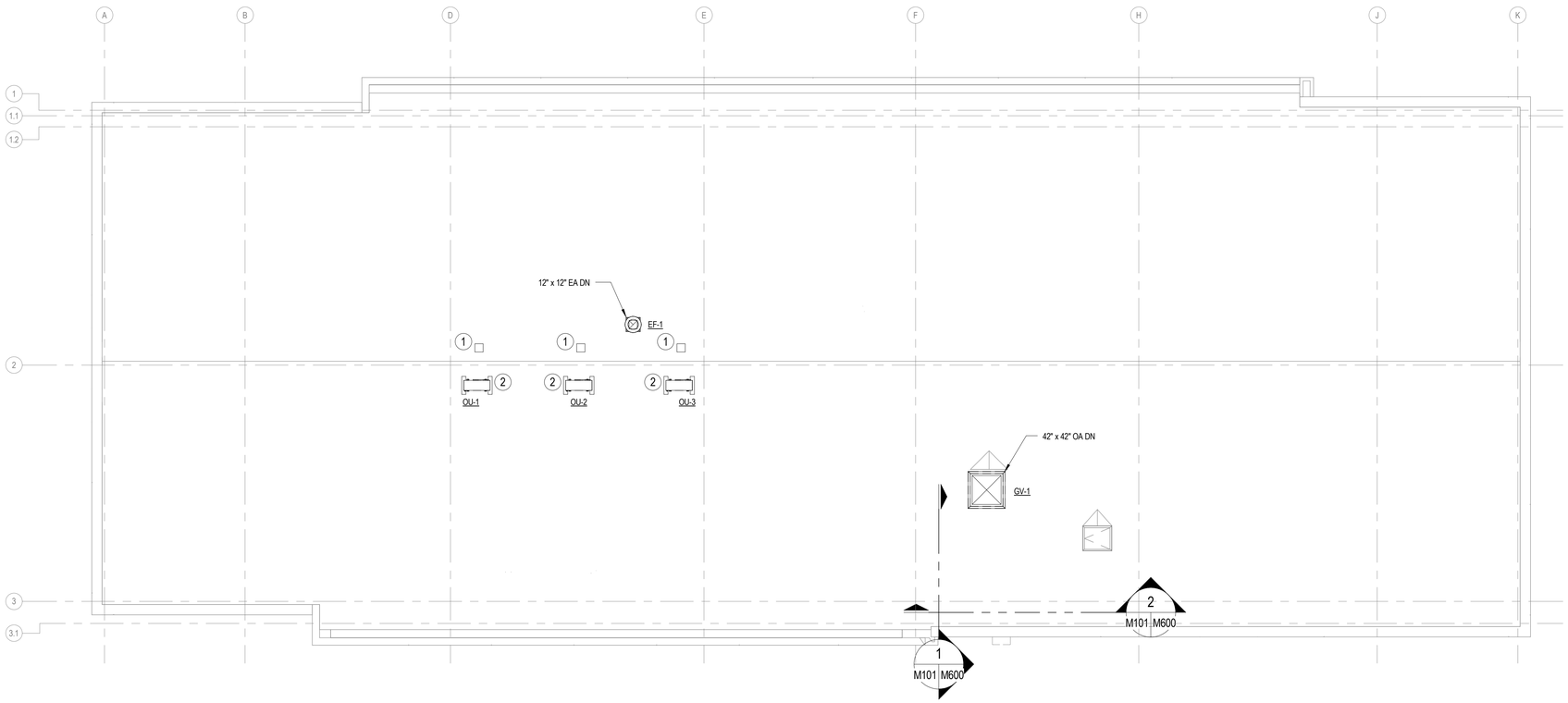

1 / M600 M102 **02 ROOF LEVEL - DUCTWORK**

SCALE: 1/8" = 1'-0"

0' 4' 8' 16' 32'

CLIENT AND PROJECT

NORTH CAROLINA DEPARTMENT OF TRANSPORTATION

SCO ID NO.: 14-11006-01A

NEW DIVISION 8 OFFICE BUILDING

150 DOT DRIVE
CARTHAGE, NC 28327

DESIGNER

ANDRE JOHNSON ARCHITECT

PO BOX 14637
RALEIGH, NORTH CAROLINA 27620
TELEPHONE: 919.661.6935
MAIL: info@andrejohnsonarchitect.com

© 2015 Andre Johnson Architect, PLLC
Duplication or reproduction by any means without the express written consent of Andre L. Johnson, Architect is a violation of Federal and international law. The information contained on this document is the intellectual property of Andre L. Johnson, Architect and all rights thereto are Reserved. For exceptions, refer to the Owner-Architect Agreement.

CONSULTANT

RMF ENGINEERING, INC.
301 McCullough Drive, Suite 400
Charlotte, NC 28262

REGISTRATION

RMF ENGINEERING, INC. CERT. NO. C-1125 RALEIGH, N.C.

NORTH CAROLINA PROFESSIONAL SEAL 041471 ENGINEER BLAKE A. SMITH

Aug 5 2016

ISSUE

No.	Date	Description

SHEET INFO

ROOF LEVEL - DUCTWORK

M102

PROJECT NO: P1423.00
DATE: AUGUST 5, 2016
BID DOCUMENTS

DRAWING NOTES

1. ROUTE 1-1/2" CONDENSATE DRAIN TO HUB DRAIN

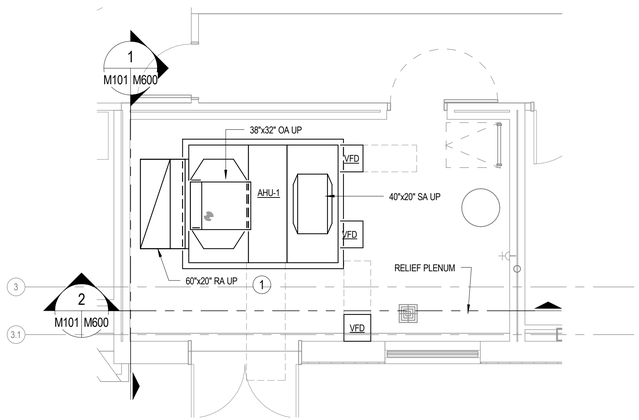

1 M101 M600 **Lower Enlarged Floor Plan - Mech Room 147**
SCALE: 1/4" = 1'-0"

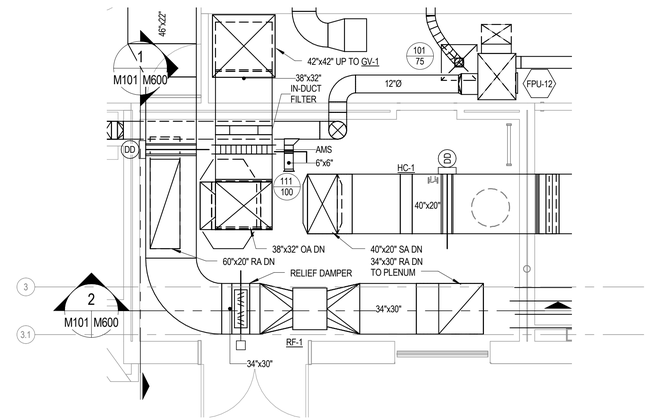

2 M101 M400 **Upper Enlarged Floor Plan - Mech Room 147**
SCALE: 1/4" = 1'-0"

CLIENT AND PROJECT

NORTH CAROLINA DEPARTMENT OF TRANSPORTATION

SCO ID NO.: 14-11006-01A

NEW DIVISION 8 OFFICE BUILDING

150 DOT DRIVE
CARTHAGE, NC 28327

DESIGNER

ANDRE JOHNSON ARCHITECT

PO BOX 14637
RALEIGH, NORTH CAROLINA 27620
TELEPHONE: 919.661.6935
MAIL: info@andrejohnsonarchitect.com

© 2015 Andre Johnson Architect, PLLC
Duplication or reproduction by any means without the express written consent of Andre L. Johnson, Architect is a violation of Federal and international law. The information contained on this document is the intellectual property of Andre L. Johnson, Architect and all rights thereto are Reserved. For exceptions, refer to the Owner-Architect Agreement.

CONSULTANT

RMF ENGINEERING, INC.
301 McCullough Drive, Suite 400
Charlotte, NC 28262

REGISTRATION

RMF ENGINEERING, INC. P.A. CERT. NO. C-1125 RALEIGH, N.C.

NORTH CAROLINA PROFESSIONAL SEAL 041471 ENGINEER BLAKE A. SMITH

Aug 5 2016

ISSUE

No.	Date	Description

SHEET INFO

MECHANICAL ENLARGED PLAN

M400

PROJECT NO: P1423.00
DATE: AUGUST 5, 2016
BID DOCUMENTS

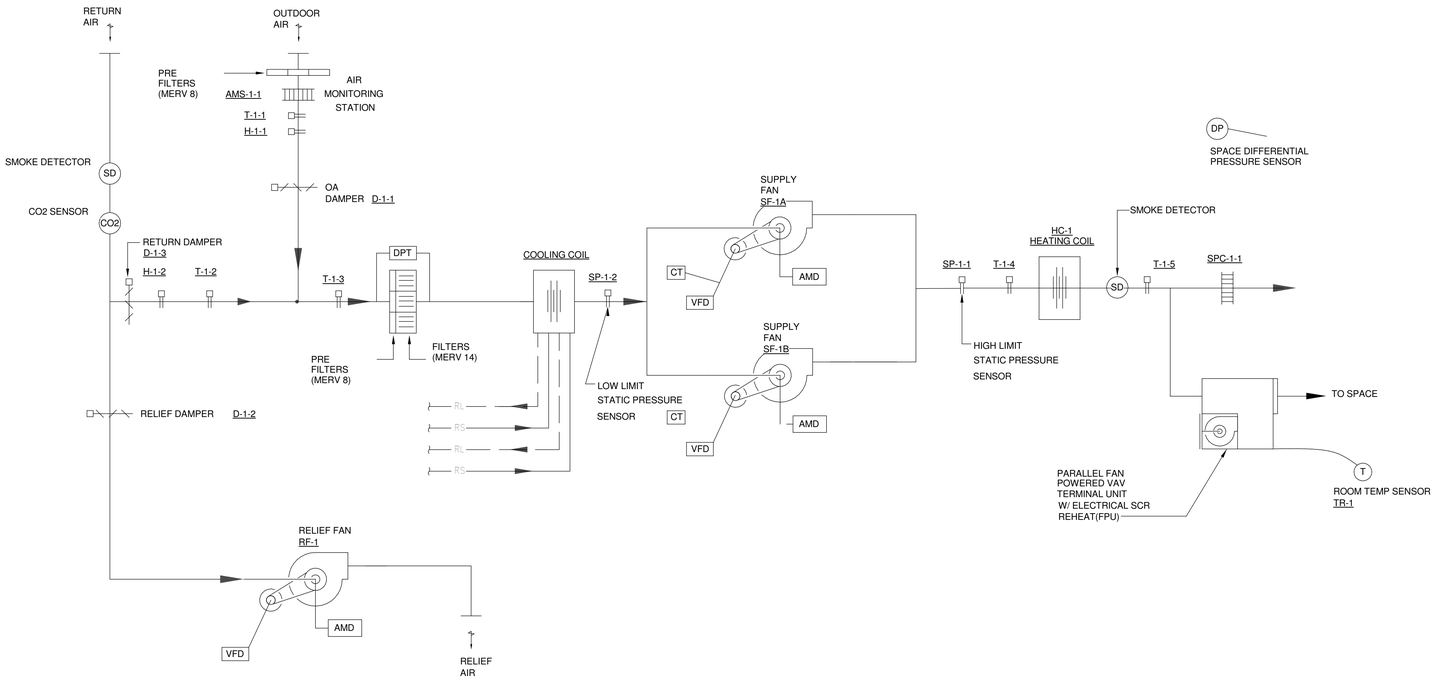

INPUT/OUTPUT SUMMARY

CODE:
A - ANALOG
B - BINARY
X - FUNCTION REQUIRED
( ) - REFER TO NOTES BELOW

SYSTEM	POINT DESCRIPTION	CONTROL - UNIT: DEVICE: MOTOR VALVE	DAMPER(S)	VARIABLE FREQUENCY DRIVE	VARIABLE: TEMPERATURE	HUMIDITY	PRESSURE	FLOW	LEVEL	ENTHALPY	INDICATION - INPUT: TEMPERATURE	HUMIDITY	PRESSURE	STATIC PRESS.	DIFF. PRESS.	FLOW	CONTACT	KILOWATT	AMPERES	POSITION	FREQUENCY	SYSTEM FEATURES: STATUS	ALARM	START - STOP	LEAD - LAG	PROGRAMS: S/S OPTIMIZATION	TREND	TOTALIZATION	ENERGY UNITS	GRAPHICS
AHU-1	SUPPLY FAN SF-1A (VFD)	B		A													B					X	X	X							X
	SUPPLY FAN SF-1B (VFD)	B		A													B					X	X	X							X
	RETURN FAN RF-1 (VFD)	B		A													B					X	X	X							X
	OUTSIDE AIR T-1-1										A											X									X
	RETURN AIR T-1-2										A											X									X
	MIXED AIR T-1-3										A											X									X
	DISCHARGE AIR T-1-4, T-1-5										A											X									X
	RETURN AIR SMOKE DETECTOR										A											X									X
	DISCHARGE AIR SMOKE DETECTOR										A											X									X
	FILTER DPT														A								X								X
	MOTORIZED O.A. DAMPER D-1-1			A																B		X									X
	MOTORIZED RETURN DAMPER D-1-3			A																B		X									X
	MOTORIZED RELIEF DAMPER D-1-2			A																B		X									X
	HIGH LIMIT STATIC SENSOR SP-1-1														A								X								X
	DUCT STATIC PRESSURE SPC-1-1														A								X								X
	OUTDOOR AIR H-1-1											A											X								X
	RETURN AIR H-1-2											A											X								X
	CO2 SENSOR (RETURN DUCT)																A						X								
	SUPPLY FAN SF-1A (AMD)																A														
	SUPPLY FAN SF-1B (AMD)																A														
	RETURN FAN RF-1 (AMD)																A														
	OUTSIDE AIR AMS-1-1																A														
	HEATING COIL/SCR																														
VAV UNITS	TERMINAL UNIT			A				A									A														
	ELECTRIC REHEAT COIL		A																												
	ROOM TEMP										A																				X
	PARALLEL FAN	B															B														

AHU-1 SEQUENCE OF OPERATION

GENERAL

A. SEE PLANS FOR LOCATIONS OF ALL ROOM THERMOSTATS, DAMPERS, VALVES, AND EQUIPMENT; WHERE SUCH DEVICES ARE NOT INDICATED, BUT ARE REQUIRED BY THE SEQUENCES, THEY SHALL BE PROVIDED AND LOCATED IN THE FIELD BY THE CONTROLS SUBCONTRACTOR. OUTSIDE AIR AND RETURN AIR DAMPERS TO BE PROVIDED WITHIN THE AIR HANDLING UNIT.

B. DIVISION 26 SHALL FURNISH ALL DETECTION DEVICES (HEAT/SMOKE) AS REQUIRED BY NFPA STANDARD 90A AND THE BUILDING CODE. THE INSTALLATION OF DETECTION DEVICES AND ALL CONTROL/POWER WIRING FOR SMOKE DETECTION DEVICES AND SMOKE DAMPER SHALL BE PROVIDED UNDER THIS SECTION. DETECTION DEVICES SHALL PROVIDE AUTOMATIC SHUTDOWN OF THE HVAC SYSTEMS IN ACCORDANCE WITH NFPA 90A.

C. OUTDOOR AIR DAMPERS SHALL BE CLOSED AND PROVEN CLOSED WHEN SETPOINT IS REACHED.

D. ALL TEMPERATURE, HUMIDITY, PRESSURE, AND TIME SET POINTS SHALL BE FULLY ADJUSTABLE FROM THE BMS.

E. ALL TWO POSITION DAMPERS SHALL BE PROVEN OPEN BY THE USE OF END SWITCHES.

A.) SYSTEM CONTROL

1.) SUPPLY AND RETURN FANS STARTERS SHALL BE MANUALLY INDEXED TO THE AUTOMATIC MODE AT THE STARTER H-O-A SWITCH.

2.) THE AIR HANDLING UNIT SHALL BE ENERGIZED VIA REMOTE SIGNAL FROM THE BUILDING MANAGEMENT SYSTEM (BMS).

3.) WHEN THE UNIT IS DE-ENERGIZED ALL CONTROLS SHALL RETURN TO THEIR NORMAL POSITION READY FOR RESTARTING. OUTSIDE AIR DAMPER D-1-1 SHALL CLOSE. RETURN AIR DAMPER D-1-3 SHALL BE OPEN.

4.) WHEN THE SUPPLY FAN IS CALLED TO START THROUGH THE BMS, THE SUPPLY FAN SHALL START AND RUN CONTINUOUSLY AFTER DAMPERS D-1-1A, D-1-2, AND D-1-3 HAVE BEEN PROVEN OPEN. WHEN THE UNIT IS STOPPED, THE FANS SHALL DE-ENERGIZE AND AFTER AN ADJUSTABLE TIME, THE DAMPERS SHALL CLOSE ALLOWING FOR FAN WIND DOWN TIME.

5.) THE SUPPLY FAN SPEED SHALL BE MODULATED THROUGH THE VFD TO MAINTAIN CONSTANT SYSTEM STATIC PRESSURE AS SEEN BY SPC-1-1.

6.) THE SUPPLY FANS SHALL OPERATE AS LEAD/LAG AND ALTERNATE WHICH FAN IS LEAD. LEAD FAN SHALL SPEED UP AS NECESSARY AND RUN SOLO UP TO 70%. ABOVE 70% THE LAG FAN SHALL ENGAGE AND RUN BOTH FANS SIMULTANEOUSLY.

7.) THE CONDENSING UNITS, CU-1 AND CU-2, SHALL BE LEAD/LAG OPERATION AND ALTERNATE BI-WEEKLY (ADJ).

8.) A FAILURE OF EITHER SUPPLY FAN AS SENSED BY THEIR RESPECTIVE VFD SHALL BE ALARMED TO THE BMS.

9.) HIGH STATIC LIMIT SENSOR SP-1-1 SHALL DE-ENERGIZE BOTH SUPPLY FANS IF HIGH LIMIT SETTING IS REACHED.

10.) CO2 SENSOR SHALL MONITOR RETURN AIR TO MONITOR CO2 PPM. SENSOR SHALL GENERATE AN ALARM TO THE BMS SYSTEM IF CONDITIONS EXCEED SETPOINT BY MORE THAN 10%. CO2 ALARM SETTING SHALL BE MAX 800 PPM CO2.

B.) UNOCCUPIED MODE

1.) OCCUPIED & UNOCCUPIED MODE WILL BE ON TIMECLOCK SET BY OWNER.

2.) IN UNOCCUPIED MODE, AHU-1 SHALL OPERATE WITH MAX OUTSIDE AIR DAMPER D-1-1B CLOSED, MIN OA DAMPER D-1-1A SET TO UNOCCUPIED MIN OA SETTING & RELIEF DAMPER D-1-2 CLOSED. RELIEF FAN RF-1 SHALL BE OFF. SUPPLY AIR FANS SF-1A & SR-1B SHALL BE ON. THE SYSTEM SHALL MODULATE TO MAINTAIN A TEMPERATE OF 55° AS SENSED BY T-1-4.

3.) EXHAUST FAN EF-1 SHALL BE OFF

C.) COOLING MODE

1.) SUPPLY FANS SHALL BE RUNNING; RETURN, MINIMUM OUTDOOR D-1-3, D-1-2, AND D-1-1B SHALL BE OPEN.

2.) DISCHARGE AIR TEMPERATURE SENSOR T-1-5, THROUGH THE DDC UNIT, SHALL CYCLE CONDENSOR UNIT TO MAINTAIN THE DISCHARGE TEMPERATURE SET POINT OF FIFTY-THREE (53) DEGREES FAHRENHEIT.

D.) SMOKE CONTROL SEQUENCE

1.) SMOKE CONTROL SHALL ON DETECTION OF PRODUCTS OF COMBUSTION, SHUT DOWN ALL SUPPLY AND RETURN FANS AND CLOSE ALL DAMPERS.

2.) ALL SAFETIES FOR FREEZESTAT AND EMERGENCY STOP SHALL BE BYPASSED.

3.) REFER TO SCHEMATIC AND PLANS FOR NUMBER AND LOCATION OF SMOKE DETECTORS.

E.) FILTERS

1.) DIFFERENTIAL PRESSURE TRANSMITTERS INSTALLED ACROSS EACH FILTER BANK SHALL ALARM THE BAS WHEN THEIR RESPECTIVE SETTINGS ARE REACHED.

F.) SAFETIES

THE FOLLOWING SAFETIES SHALL DE-ENERGIZE THE SUPPLY FANS, CLOSE DAMPERS TO OUTSIDE AIR, CLOSE SMOKE/ISOLATION DAMPERS AND GENERATE AN ALARM TO THE DDC SYSTEM:

1. SHUTDOWN SIGNAL FROM THE FIRE ALARM SYSTEM
2. DISCHARGE HIGH STATIC PRESSURE SWITCH
3. DISCHARGE LOW STATIC PRESSURE SWITCH

ALL SAFETIES REQUIRE MANUAL RESET.

G.) ADDITIONAL ALARMS

A DIFFERENTIAL PRESSURE SWITCH SHALL MONITOR FILTER LOADING AND GENERATE AN ALARM UPON ACTIVATION.

H.) EXHAUST FANS AND VENTILATION FANS

1.) EXHAUST FAN EF-1 SHALL BE INTERLOCKED TO RUN DURING OCCUPIED MODE. ADJUSTABLE CIRCUIT TRANSDUCER SHALL PROVIDE FAN STATUS AND ALARM IF FAN FAILS TO START.

I.) ECONOMIZER MODE

1.) AHU UNIT SHALL RUN BASED OFF OF O.A. ENTHALPY MEASURED FROM T-1-4 & H-1-1 OA DUCT. ENTHALPY RANGE FOR ECONOMIZER OPERATION SHALL BE BETWEEN XXX-XXX. ENTHALPY SHALL BE CALCULATED BY TEMPERATURE AND HUMIDITY SENSOR IN OA DUCT.

1.) MIN & MAX (D-1-1A & D-1-1B) OA DAMPER SHALL OPEN. RETURN DAMPER D-1-3 SHALL CLOSE. RELIEF FAN RF-1 SHALL ENERGIZE. RELIEF FAN VFD SHALL OPERATE FAN AT 80% OF AHU SUPPLY FLOW OR OA AIR MONITORING STATION (AMS-1-1)

J.) HEATING COIL

1.) SHOULD THE AHU DISCHARGE TEMPERATURE SENSOR T-1-4 DROP BELOW 48°F(ADJ) THE HEATING COIL HC-1 SHALL STAGE ON TO MAINTAIN 55°F(ADJ) DISCHARGE TEMPERATURE AT T-1-5.

1 / M500

SCHEMATIC - AHU-1

SCALE: 12" = 1'-0"

SEQUENCE OF OPERATION: PARALLEL FAN POWERED VAV TERMINAL W/ ELECTRIC REHEAT COIL

A. OCCUPIED-UNOCCUPIED OPERATION: THE BAS BUILDING SCHEDULE WILL DETERMINE SYSTEM OCCUPANCY. WHEN THE SYSTEM IS IN THE "OCCUPIED" MODE, THE FPU CONTROLLER WILL OPERATE WITH THE OCCUPIED TEMPERATURE AND AIRFLOW SETPOINTS. IN THE "UNOCCUPIED" MODE, THE CONTROLLER WILL MAINTAIN UNOCCUPIED TEMPERATURE AND AIRFLOW SETPOINTS.

B. TERMINAL UNIT TEMPERATURE CONTROL: THE FPU CONTROLLER WILL OPERATE THE TERMINAL BOX DAMPER, FAN, AND ELECTRIC REHEAT COIL IN SEQUENCE, TO MAINTAIN THE COOLING AND HEATING REQUIREMENTS OF THE SPACE SENSOR. WHENEVER THE UNIT IS OPERATING IN "HEATING" MODE, THE BOX DAMPER, FAN, AND ELECTRIC REHEAT COIL WILL BE IN MINIMUM HEATING AIRFLOW POSITION AND THE REHEAT VALVE WILL MODULATE TO MAINTAIN SPACE TEMPERATURE. IN "COOLING" MODE, THE AIRFLOW SETTING WILL VARY AS NEEDED BETWEEN MAXIMUM AND MINIMUM AIRFLOW TO MAINTAIN SPACE TEMPERATURE.

CLIENT AND PROJECT

NORTH CAROLINA DEPARTMENT OF TRANSPORTATION

SCO ID NO.: 14-11006-01A

NEW DIVISION 8 OFFICE BUILDING

150 DOT DRIVE
CARTHAGE, NC 28327

DESIGNER

ANDRE JOHNSON ARCHITECT
PO BOX 14637
RALEIGH, NORTH CAROLINA 27620
TELEPHONE: 919.661.6935
MAIL: info@andrejohnsonarchitect.com

© 2015 Andre Johnson Architect, PLLC
Duplication or reproduction by any means without the express written consent of Andre L. Johnson, Architect is a violation of Federal and international law. The information contained on this document is the intellectual property of Andre L. Johnson, Architect and all rights thereto are Reserved. For exceptions, refer to the Owner-Architect Agreement.

CONSULTANT

RMF ENGINEERING, INC.
301 McCullough Drive, Suite 400
Charlotte, NC 28262

REGISTRATION

NORTH CAROLINA PROFESSIONAL SEAL 041471 ENGINEER BLAKE A. SMITH

Aug 5 2016

ISSUE

No.	Date	Description

SHEET INFO

MECHANICAL SCHEMATICS

M500

PROJECT NO: P1423.00
DATE: AUGUST 5, 2016
BID DOCUMENTS

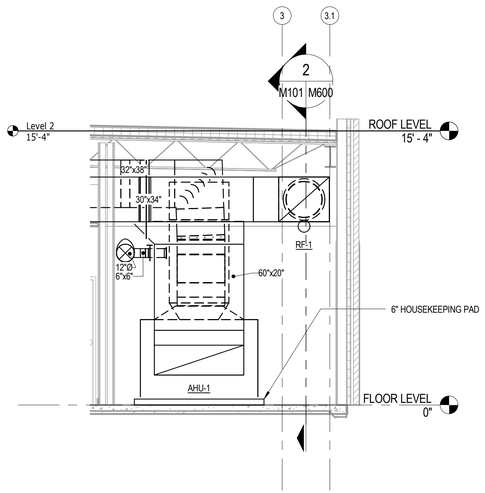

1 M101 M600 **MECHANICAL ROOM SECTION 1**
SCALE: 1/4" = 1'-0"

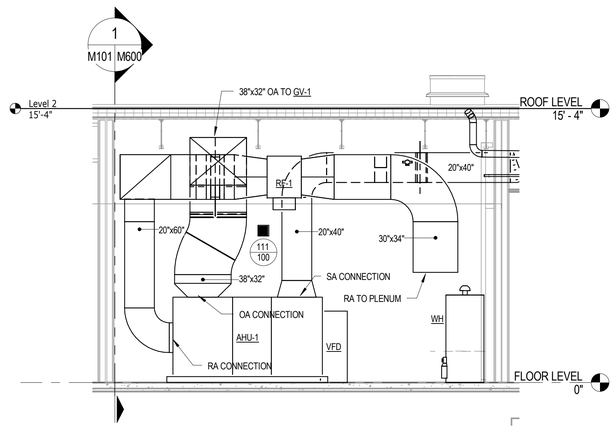

2 M101 M600 **MECHANICAL ROOM SECTION 2**
SCALE: 1/4" = 1'-0"

CLIENT AND PROJECT

NORTH CAROLINA DEPARTMENT OF TRANSPORTATION

SCO ID NO.: 14-11006-01A

NEW DIVISION 8 OFFICE BUILDING

150 DOT DRIVE
CARTHAGE, NC 28327

DESIGNER

ANDRE JOHNSON ARCHITECT
PO BOX 14637
RALEIGH, NORTH CAROLINA 27620
TELEPHONE: 919.661.6935
MAIL: info@andrejohnsonarchitect.com

© 2015 Andre Johnson Architect, PLLC
Duplication or reproduction by any means without the express written consent of Andre L. Johnson, Architect is a violation of Federal and international law. The information contained on this document is the intellectual property of Andre L. Johnson, Architect and all rights thereto are Reserved. For exceptions, refer to the Owner-Architect Agreement.

CONSULTANT

RMF ENGINEERING, INC.
301 McCullough Drive, Suite 400
Charlotte, NC 28262

REGISTRATION

RMF ENGINEERING, INC. P.A. CERT. NO. C-1125 RALEIGH, N.C.

NORTH CAROLINA PROFESSIONAL SEAL 041471 ENGINEER BLAKE A. SMITH

Aug 5 2016

ISSUE

No.	Date	Description

SHEET INFO

MECHANICAL SECTIONS

M600

PROJECT NO: P1423.00
DATE: AUGUST 5, 2016
BID DOCUMENTS

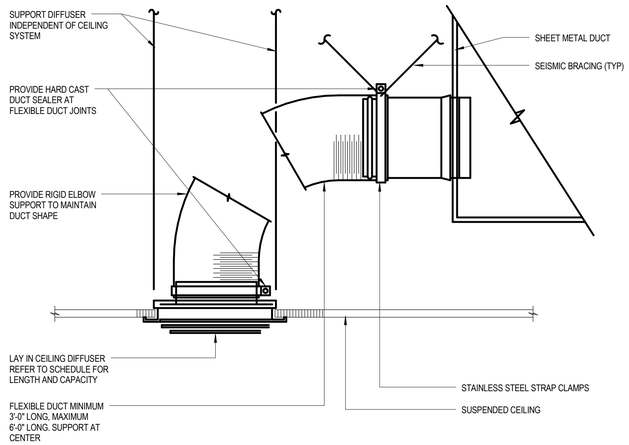

NOTES :

1. DUCT INSULATION SHALL BE PROVIDED AS SPECIFIED.
2. PROVIDE ADDITIONAL ROUND, RIGID SHEET METAL DUCTWORK AS REQUIRED TO LIMIT FLEXIBLE DUCT LENGTH TO 6'-0" MAXIMUM.
3. MAXIMUM SAG 1/2" PER FOOT.
4. CONTRACTOR SHALL VERIFY MAXIMUM LOADING ON DUCTWORK SUPPORT ASSEMBLIES.

3 M700 **DETAIL - CEILING DIFFUSER BRANCH DUCTS**
SCALE: 12" = 1'-0"

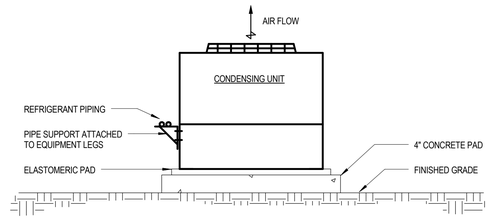

2 M700 **DETAIL - AIR COOLED CONDENSING UNIT ON GRADE**
SCALE: 12" = 1'-0"

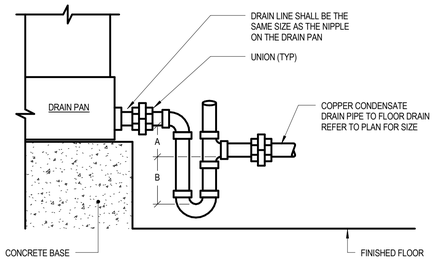

NOTES

1. REFER TO MANUFACTURER'S WRITTEN INSTRUCTIONS FOR PIPE SIZES AND TRAP CONFIGURATION.
2. A = 0'-3", B = 0'-6"

1 M700 **DETAIL - COIL CONDENSATE DEEP SEAL TRAP (MECH ROOM)**
SCALE: 12" = 1'-0"

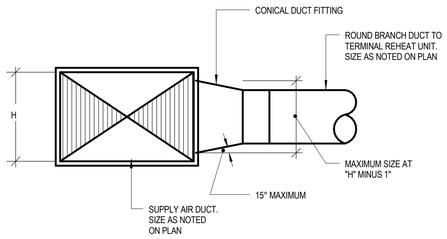

5 M700 **DETAIL - CONICAL DUCT TAP FITTING**
SCALE: 12" = 1'-0"

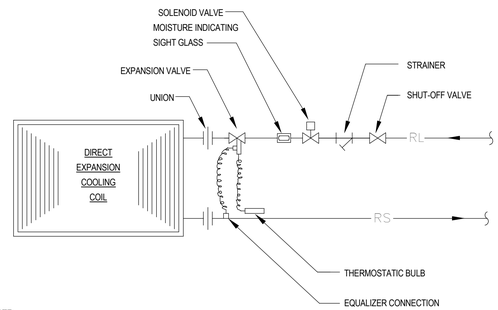

NOTE:
ALL REFRIGERANT PIPING SHALL BE INSTALLED IN STRICT COMPLIANCE WITH THE UNIT MANUFACTURER'S PRINTED INSTRUCTIONS.

4 M700 **DETAIL - DX Cooling Coil Piping**
SCALE: 12" = 1'-0"

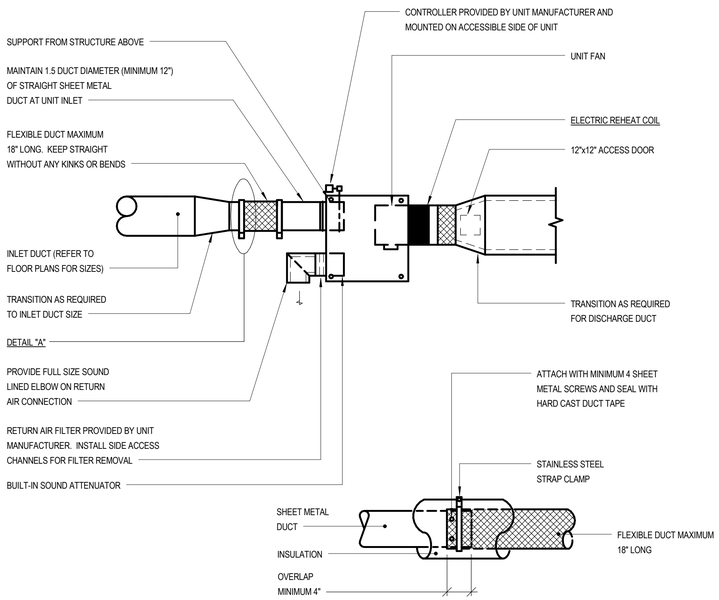

9 M700 **DETAIL - FAN POWERED TERMINAL REHEAT UNIT**
SCALE: 12" = 1'-0"

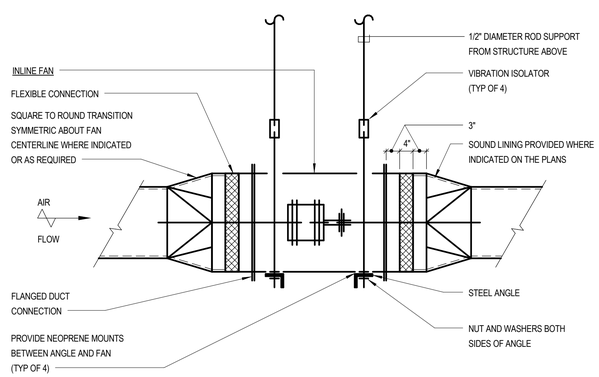

NOTE:

1. PROVIDE FLEXIBLE CONNECTIONS BEFORE OR AFTER TRANSITIONS AS INDICATED ON THE PLANS.

8 M700 **DETAIL - INLINE FAN INSTALLATION**
SCALE: 12" = 1'-0"

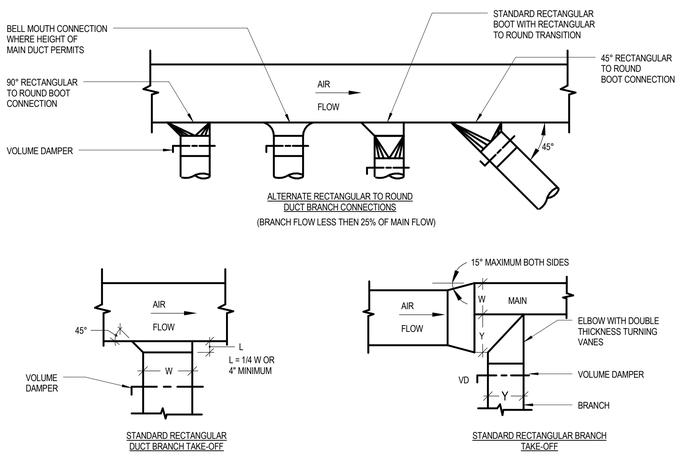

7 M700 **DETAIL - LOW VELOCITY BRANCH TAKE-OFF**
SCALE:NONE

CLIENT AND PROJECT

NORTH CAROLINA DEPARTMENT OF TRANSPORTATION

SCO ID NO.: 14-11006-01A

NEW DIVISION 8 OFFICE BUILDING

150 DOT DRIVE
CARTHAGE, NC 28327

DESIGNER

ANDRE JOHNSON ARCHITECT
PO BOX 14637
RALEIGH, NORTH CAROLINA 27620
TELEPHONE: 919.661.6935
MAIL: info@andrejohnsonarchitect.com

© 2015 Andre Johnson Architect, PLLC
Duplication or reproduction by any means without the express written consent of Andre L. Johnson, Architect is a violation of Federal and international law. The information contained on this document is the intellectual property of Andre L. Johnson, Architect and all rights thereto are Reserved. For exceptions, refer to the Owner-Architect Agreement.

CONSULTANT

RMF ENGINEERING, INC.
301 McCullough Drive, Suite 400
Charlotte, NC 28262

REGISTRATION

RMF ENGINEERING, INC. P.A. CERT. NO. C-1125 RALEIGH, N.C.

NORTH CAROLINA PROFESSIONAL ENGINEER SEAL 041471 BLAKE A. SMITH

Aug 5 2016

ISSUE

No.	Date	Description

SHEET INFO

MECHANICAL DETAILS

M700

PROJECT NO: P1423.00
DATE: AUGUST 5, 2016
BID DOCUMENTS

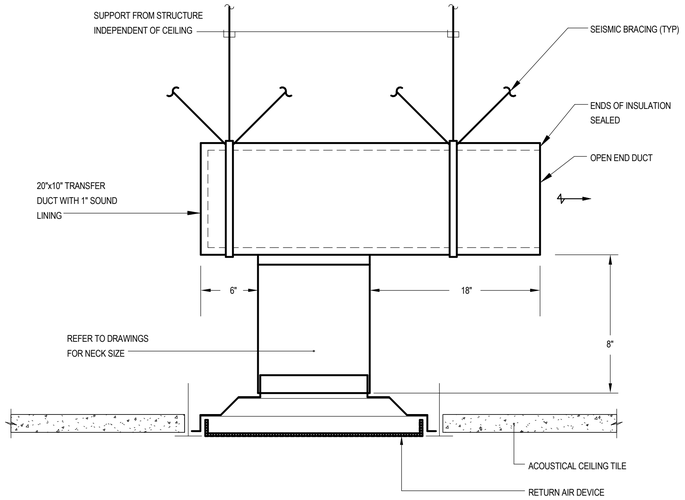

NOTES:

1. PROVIDE SEISMIC SWAY BRACING FOR ALL DUCTWORK AND HANGERS PER THE INTERNATIONAL BUILDING CODE AND INTERNATIONAL MECHANICAL CODE.
2. CONTRACTOR SHALL VERIFY MAXIMUM LOADING ON DUCTWORK SUPPORT ASSEMBLIES.

3 / M701 **DETAIL - NON-DUCTED RETURN AIR REGISTER**
SCALE: 12" = 1'-0"

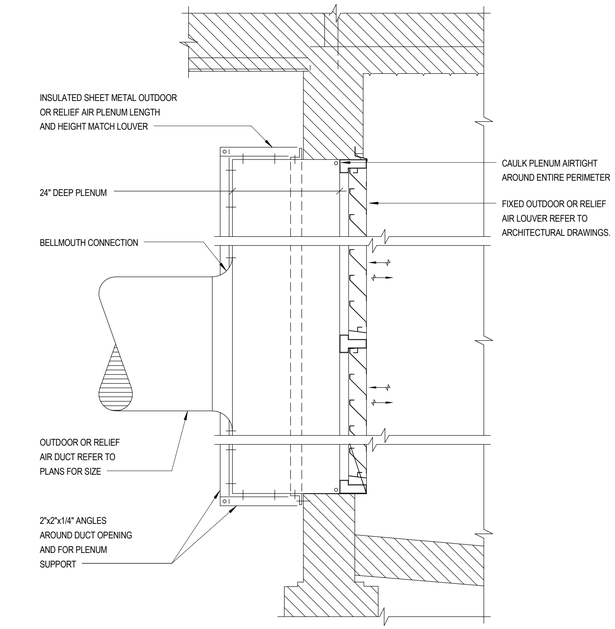

2 / M701 **DETAIL - OUTDOOR/RELIEF AIR PLENUM**
SCALE: 12" = 1'-0"

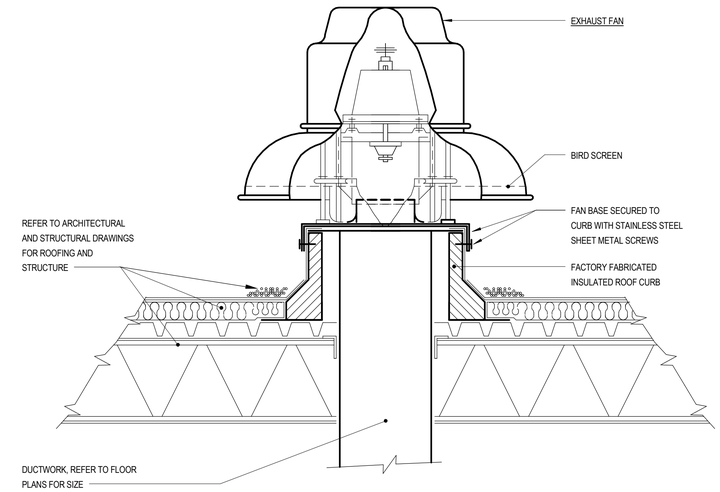

1 / M701 **DETAIL - ROOF MOUNTED FAN**
SCALE: 12" = 1'-0"

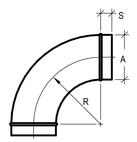

DIE-STAMPED 45° AND 90°

DIMENSIONS:
A = 3" THROUGH 8"
CR = 1.5A
S = 2"

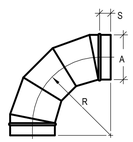

FABRICATED-OVER 22"

DIMENSIONS:
A = 23" AND LARGER
CR = 1.5A
S = 2"
0-35° = 2 PIECE
36-71° = 3 PIECE
72-90° = 5 PIECE
ADD ONE PIECE FOR EACH ADDITIONAL 18° OR FRACTION THEREOF

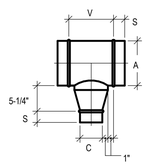

CONICAL TEE

DIMENSIONS:
S = 2"
TC = ONE TAP
V = C+4"
* TC2 = TWO TAPS
V = C+D+8"

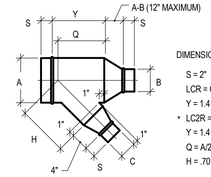

REDUCING CONICAL LATERAL

DIMENSIONS:
S = 2"
LCR = ONE TAP
Y = 1.414C+4.83
* LC2R = TWO TAPS
Y = 1.414(C+D)+9.66
Q = A/2+.707C+2.414
H = .707A+.5C+2"

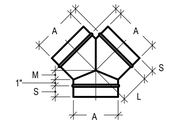

Y-BRANCH 90°

DIMENSIONS:
S = 2"
L = A/2+1"
M = .207A

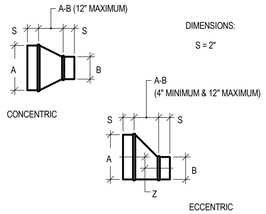

CONCENTRIC

DIMENSIONS:
S = 2"

ECCENTRIC

REDUCERS

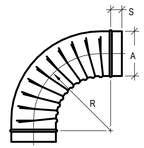

PLEATED

DIMENSIONS:
90°A = 4-12",14"
60°A = 4-12",14",16"
45°A = 4-12",14",16"
CR = 1.5A
S = 2"

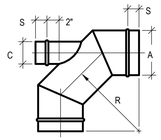

HEEL TAPPED 90°

DIMENSIONS:
ALL SIZES
CR = 1.5A
S = 2"

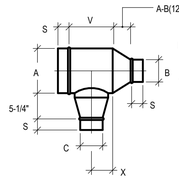

REDUCING CONICAL TEE

DIMENSIONS:
S = 2"
* TCR = ONE TAP
V = C+4"
TC2R = TWO TAPS
V = C+D+8"

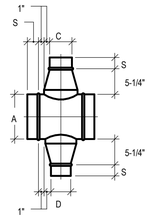

CONICAL CROSS 90°

DIMENSIONS:
S = 2"
V = LARGER TAP + 4"

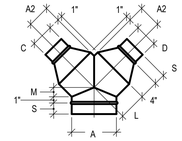

REDUCING Y-BRANCH 90°

DIMENSIONS:
S = 2"
L = A/2+1"
M = .207A

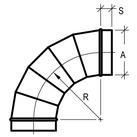

FABRICATED-9" THROUGH 22"

DIMENSIONS:
A = 3" THROUGH 22"
CR = 1.5A
S = 2"
0-35° = 2 PIECE
36-71° = 3 PIECE
72-90° = 5 PIECE

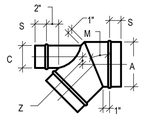

HEEL TAPPED 45°

DIMENSIONS:
ALL SIZES
CR = VARIES
S = 2"
Z = A-C/2-.707
M = 22.5°
R = DOES NOT EQUAL 1.5A

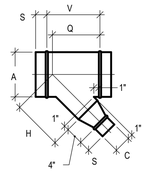

CONICAL LATERAL

DIMENSIONS:
S = 2"
LC = ONE TAP
V = 1.414C+4.83
* LC2 = TWO TAPS
V = 1.414(C+D)+9.66
Q = A/2+.707C+2.414
H = .707A+.5C+2"

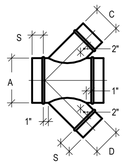

LATERAL CROSS

DIMENSIONS:
S = 2"
LC = ONE TAP
V = 1.414 (LARGER TAP)+2"

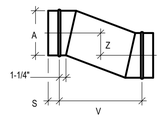

OFFSET

DIMENSIONS:
S = 2"
V = 2A UNLESS SPECIFIED
Z = SPECIFY OFFSET

DIAMETER	NUMBER OF VANES
3-5"	1
6-9"	2
10-14"	3
15-19"	4
20-60"	5
OVER 60"	12" CTR'S

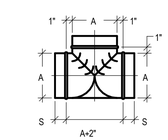

BULLHEAD TEE

DIMENSIONS:
S = 2"
SEE SCHEDULE BELOW

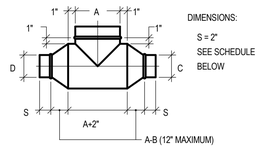

REDUCING BULLHEAD TEE

DIMENSIONS:
S = 2"
SEE SCHEDULE BELOW

NOTES:

* IF TWO TAPS, BOTH TAPS ARE IN LINE ON ONE SIDE AND THE TAPS ARE SEPARATED BY 2 INCHES

4 / M701 **DETAIL - ROUND DUCT FITTINGS**
SCALE: 12" = 1'-0"

CLIENT AND PROJECT

NORTH CAROLINA DEPARTMENT OF TRANSPORTATION

SCO ID NO.: 14-11006-01A

NEW DIVISION 8 OFFICE BUILDING

150 DOT DRIVE
CARTHAGE, NC 28327

DESIGNER

ANDRE JOHNSON ARCHITECT
PO BOX 14637
RALEIGH, NORTH CAROLINA 27620
TELEPHONE: 919.661.6935
MAIL: info@andrejohnsonarchitect.com

© 2015 Andre Johnson Architect, PLLC
Duplication or reproduction by any means without the express written consent of Andre L. Johnson, Architect is a violation of Federal and international law. The information contained on this document is the intellectual property of Andre L. Johnson, Architect and all rights thereto are Reserved. For exceptions, refer to the Owner-Architect Agreement.

CONSULTANT

RMF ENGINEERING, INC.
301 McCullough Drive, Suite 400
Charlotte, NC 28262

REGISTRATION

RMF ENGINEERING, INC. P.A. CERT. NO. C-1125 RALEIGH, N.C.
NORTH CAROLINA PROFESSIONAL SEAL 041471 ENGINEER BLAKE A. SMITH

Aug 5 2016

ISSUE

No.	Date	Description

SHEET INFO

MECHANICAL DETAILS

M701

PROJECT NO: P1423.00
DATE: AUGUST 5, 2016
BID DOCUMENTS

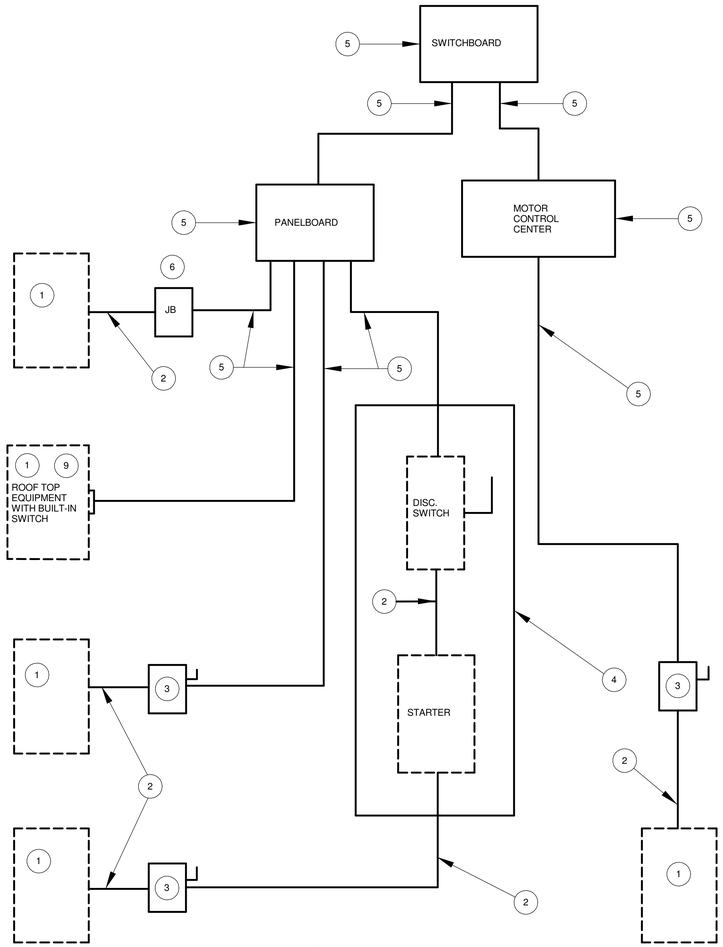

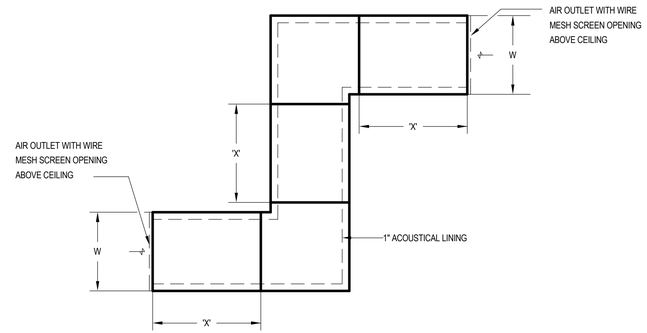

2 M702 **DETAIL - TRANSFER DUCT**
SCALE: 12" = 1'-0"

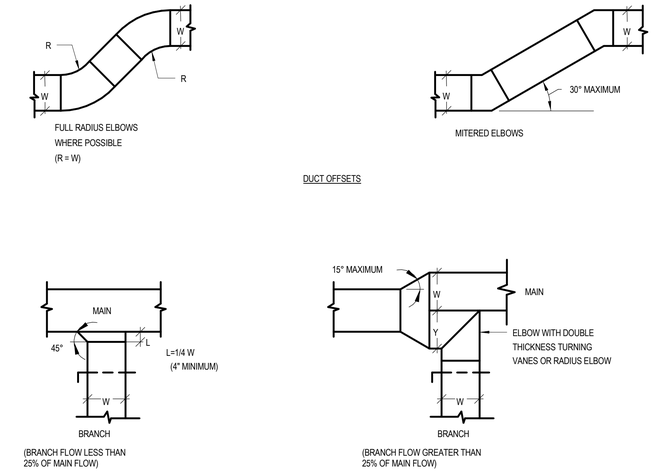

1 M702 **DETAIL - RECTANGULAR DUCT FITTINGS**
SCALE:NONE

ELECTRICAL NOTES

1. EQUIPMENT PROVIDED BY TRADES OTHER THAN ELECTRICAL.
2. CONDUIT & WIRING BY MECHANICAL, PLUMBING CONTRACTOR OR OTHER TRADES OTHER THAN ELECTRICAL.
3. IF AN ADDITIONAL DISCONNECT IS REQUIRED BY NEC, IT SHALL BE PROVIDED AND INSTALLED BY THE CONTRACTOR PROVIDING THE EQUIPMENT.
4. A COMBINATION STARTER OR VFD MAY BE USED IN LIEU OF A SEPARATE DISCONNECT SWITCH AND STARTER. LOCATE ADJACENT TO EQUIPMENT. DISCONNECT SWITCH, VFD AND/OR STARTER SHALL BE PROVIDED BY THE CONTRACTOR PROVIDING THE EQUIPMENT.
5. SWITCHBOARD, PANELBOARD, FEEDER CIRCUIT WIRING AND CONDUIT PROVIDED BY ELECTRICAL TRADE AS SHOWN ON THE ELECTRICAL DRAWINGS. SEE PANELBOARD SCHEDULES FOR WIRE AND BREAKER SIZES.
6. JUNCTION BOX MAY BE SHOWN ON ELECTRICAL PLANS FOR SOME EQUIPMENT. IF NO STARTER OR DISCONNECT IS SUPPLIED, A JUNCTION BOX SHALL BE INSTALLED ADJACENT TO EQUIPMENT. THE ELECTRICAL CONTRACTOR SHALL PROVIDE LINE SIDE WIRING TO THE JUNCTION BOX. LOAD SIDE WIRING WILL BE PROVIDED BY MECHANICAL, PLUMBING CONTRACTOR OR OTHER TRADES OTHER THAN ELECTRICAL.
7. FOR PROJECTS UTILIZING AN MCC, THE STARTER, CB, AND/OR THE VFD LOCATED IN THE MCC SHALL BE PROVIDED BY THE ELECTRICAL CONTRACTOR.
8. IN ALL CASES THE CONTRACTOR SUPPLYING THE EQUIPMENT SHALL MAKE THE FINAL ELECTRICAL TERMINATIONS, START UP, AND TEST THE EQUIPMENT.
9. IF THE ROOF TOP EQUIPMENT IS NOT PROVIDED WITH BUILT IN DISCONNECT SWITCH, THE ELECTRICAL CONTRACTOR SHALL PROVIDE A DISCONNECT SWITCH.

3 M702 **DETAIL - DIV OF RESPONSIBILITIES**
SCALE: 12" = 1'-0"

CLIENT AND PROJECT

NORTH CAROLINA DEPARTMENT OF TRANSPORTATION

SCO ID NO.: 14-11006-01A

NEW DIVISION 8 OFFICE BUILDING

150 DOT DRIVE
CARTHAGE, NC 28327

DESIGNER

ANDRE JOHNSON ARCHITECT
PO BOX 14637
RALEIGH, NORTH CAROLINA 27620
TELEPHONE: 919.661.6935
MAIL: info@andrejohnsonarchitect.com

© 2015 Andre Johnson Architect, PLLC
Duplication or reproduction by any means without the express written consent of Andre L. Johnson, Architect is a violation of Federal and international law. The information contained on this document is the intellectual property of Andre L. Johnson, Architect and all rights thereto are Reserved. For exceptions, refer to the Owner-Architect Agreement.

CONSULTANT

RMF ENGINEERING, INC.
301 McCullough Drive, Suite 400
Charlotte, NC 28262

REGISTRATION

RMF ENGINEERING, INC. CERT. NO. C-1125 RALEIGH, N.C.

NORTH CAROLINA PROFESSIONAL SEAL 041471 ENGINEER BLAKE A. SMITH

Aug 5 2016

ISSUE

No.	Date	Description

SHEET INFO

MECHANICAL DETAILS

M702

PROJECT NO: P1423.00
DATE: AUGUST 5, 2016
BID DOCUMENTS

FAN SCHEDULE

DESIG	SERVICE	TYPE	CFM	SP INCH H2O	APPROX RPM	BHP	HP (MOTOR SIZE)	DRIVE	ELECTRICAL	VFD	EMERGENCY POWER	APPROX WEIGHT (LBS)	BASIS OF DESIGN	REMARKS
EF-1	EXHAUST	ROOF	695 CFM	0.33	1300	0.1	1/6	BELT	120/1/60	NO	NO	50	GREENHECK GB-081-6	3.
RF-1	RELIEF	INLINE	7925 CFM	0.35	1725	1.6	2	BELT	460/3/60	YES	NO	125	GREENHECK TBI-CA-3H24-20	1. 2.

1. PROVIDE WITH VFD, VFD RATED MOTORS, AND GROUNDING RINGS
2. VFD SHALL BE PLENUM RATED
3. PROVIDE WITH INTEGRAL BACKDRAFT DAMPERS

SUPPLY FAN POWERED UNIT SCHEDULE

DESIGNATION	UNIT SIZE	PRIMARY OCCUPIED AIRFLOW		INLET SIZE	MINIMUM INLET SP (IN-WG)	MAXIMUM NC	POWER	FAN PERFORMANCE			ELECTRIC HEATING COIL PERFORMANCE						BASIS OF DESIGN	REMARKS
		MAXIMUM (CFM)	MINIMUM (CFM)					FAN AIRFLOW (CFM)	ESP (IN-WG)	FAN HP	CFM	MBH	EAT (°F)	MAT (°F)	LAT (°F)	kW		
FPU-1	2006	365	90	6"	1.25 in-wg	31	277/1/60	275	0.25 in-wg	0.125	365 CFM	9.9	55	64.79	90	2.9	PRICE FDV	
FPU-2	2006	305	90	6"	1.25 in-wg	28	277/1/60	215	0.35 in-wg	0.125	305 CFM	8.5	55	64.16	90	2.5	PRICE FDV	
FPU-3	2008	545	150	8"	1.25 in-wg	29	277/1/60	395	0.35 in-wg	0.125	545 CFM	15.1	55	64.42	90	4.4	PRICE FDV	
FPU-4	2006	255	90	6"	1.25 in-wg	29	277/1/60	165	0.50 in-wg	0.125	255 CFM	7.3	55	63.41	90	2.1	PRICE FDV	
FPU-5	2008	575	150	8"	1.25 in-wg	31	277/1/60	425	0.25 in-wg	0.125	575 CFM	15.8	55	64.61	90	4.6	PRICE FDV	
FPU-6	2006	260	90	6"	1.25 in-wg	29	277/1/60	170	0.50 in-wg	0.125	260 CFM	7.4	55	63.5	90	2.2	PRICE FDV	
FPU-7	2006	190	75	6"	1.25 in-wg	24	277/1/60	170	0.45 in-wg	0.125	245 CFM	5.8	55	61.84	90	2.0	PRICE FDV	
FPU-8	2006	385	90	6"	1.25 in-wg	32	277/1/60	295	0.25 in-wg	0.125	385 CFM	10.4	55	64.96	90	3.1	PRICE FDV	
FPU-9	2006	385	90	6"	1.25 in-wg	32	277/1/60	295	0.25 in-wg	0.125	385 CFM	10.4	55	64.96	90	3.1	PRICE FDV	
FPU-10	2006	285	90	6"	1.25 in-wg	31	277/1/60	195	0.40 in-wg	0.125	285 CFM	8.0	55	63.89	90	2.4	PRICE FDV	
FPU-11	2008	580	150	8"	1.25 in-wg	31	277/1/60	430	0.25 in-wg	0.125	580 CFM	15.9	55	64.64	90	4.7	PRICE FDV	
FPU-12	2008	520	150	8"	1.25 in-wg	29	277/1/60	370	0.25 in-wg	0.125	520 CFM	14.5	55	69.3	90	4.2	PRICE FDV	
FPU-13	2008	665	150	8"	1.25 in-wg	33	277/1/60	665	0.25 in-wg	0.125	665 CFM	17.9	55	65.07	90	5.2	PRICE FDV	
FPU-14	2006	390	90	6"	1.25 in-wg	32	277/1/60	300	0.25 in-wg	0.125	390 CFM	10.5	55	65	90	3.1	PRICE FDV	
FPU-15	2006	335	90	6"	1.25 in-wg	30	277/1/60	245	0.25 in-wg	0.125	335 CFM	9.2	55	64.51	90	2.7	PRICE FDV	
FPU-16	2008	620	150	8"	1.25 in-wg	32	277/1/60	470	0.25 in-wg	0.125	620 CFM	16.8	55	64.85	90	4.9	PRICE FDV	
FPU-17	2006	295	90	6"	1.25 in-wg	30	277/1/60	185	0.45 in-wg	0.125	295 CFM	8.4	55	63.75	90	2.5	PRICE FDV	
FPU-18	2006	365	90	6"	1.25 in-wg	31	277/1/60	365	0.25 in-wg	0.125	365 CFM	9.9	55	64.79	90	2.9	PRICE FDV	
FPU-20	2008	695	150	8"	1.25 in-wg	29	277/1/60	545	0.25 in-wg	0.125	695 CFM	18.6	55	65.19	90	5.5	PRICE FDV	
FPU-21	2006	330	90	6"	1.25 in-wg	25	277/1/60	240	0.25 in-wg	0.125	330 CFM	9.1	55	64.45	90	2.7	PRICE FDV	
FPU-22	2006	285	90	6"	1.25 in-wg	26	277/1/60	195	0.40 in-wg	0.125	285 CFM	8.0	55	63.89	90	2.4	PRICE FDV	

AIR DEVICE SCHEDULE

NUMBER	DUTY	TYPE	CFM		FACE/MODULE SIZE (IN)	NOMINAL DUCT SIZE (IN)	BLOW	MAX TOTAL AIR PD (IN H2O)	MAX NOISE CRITERIA VALUE	BASIS OF DESIGN		REMARKS
			MIN	MAX						MANUFACTURER	MODEL	
101	SUPPLY	SQUARE CONE	0 CFM	110 CFM	24"x24"	6"ø	4-WAY	.100	26	PRICE	SCDA	1
102	SUPPLY	SQUARE CONE	111 CFM	230 CFM	24"x24"	8"ø	4-WAY	.100	26	PRICE	SCDA	1
103	SUPPLY	SQUARE CONE	231 CFM	410 CFM	24"x24"	10"ø	4-WAY	.120	24	PRICE	SCDA	1
104	SUPPLY	SQUARE CONE	411 CFM	660 CFM	24"x24"	12"ø	4-WAY	.112	26	PRICE	SCDA	1
111	SUPPLY	GRILLE	0 CFM	130 CFM	8"x8"	6"x6"	45° HORZ DEFLECT	.040	20	PRICE	520	1
112	SUPPLY	GRILLE	131 CFM	275 CFM	10"x10"	8"x8"	45° HORZ DEFLECT	.071	19	PRICE	520	1
201	RETURN	PERFORATED	0 CFM	1600 CFM	24"x12"	22"x10"	-	.070	17	PRICE	PDR	1
301	EXHAUST	PERFORATED	0 CFM	400 CFM	12"x12"	10"x10"	-	.074	18	PRICE	PDR	1

1. FINISH SHALL BE A WHITE POWDER COAT FOR ALL LOCATIONS.

IN-DUCT HEATING COIL SCHEDULE

DESIGNATION	CFM	APPROX DUCT SIZE WxH	BTUH	EAT (°F)	LAT (°F)	ΔT °F	kW	ELECTRICAL V/ø/HZ	BASIS OF DESIGN	REMARKS
HC-1	2050	40"x20"	37,700	38 °F	55 °F	17	11.1	480/3/60	INDEECO	1

1. SCR CONTROLLER

SUPPLY VAV UNIT SCHEDULE

DESIGNATION	AIRFLOW (CFM)			INLET SIZE	MINIMUM INLET SP (IN-WG)	MAXIMUM NC	MAXIMUM AIR PRESSURE DROP (IN-WG)	HEATING COIL PERFORMANCE				ELECTRICAL V/ø/Hz	BASIS OF DESIGN	REMARKS
	COOLING							EAT (°F)	LAT (°F)	CAPACITY (BTU/HR)	kW			
	MAXIMUM	MINIMUM	HEATING											
VAV-1	165	70	165	6"ø	1.25	23	0.23	55	85	5346	1.57	277/1/60	PRICE SDV	
VAV-2	205	70	205	6"ø	1.25	23	0.23	55	85	6642	1.95	277/1/60	PRICE SDV	
VAV-3	205	70	205	6"ø	1.25	23	0.23	55	85	6642	1.95	277/1/60	PRICE SDV	
VAV-19	320	70	165	6"ø	1.25	23	0.23	55	85	5346	1.57	277/1/60	PRICE SDV	

CLIENT AND PROJECT

NORTH CAROLINA DEPARTMENT OF TRANSPORTATION

SCO ID NO.: 14-11006-01A

NEW DIVISION 8 OFFICE BUILDING

150 DOT DRIVE
CARTHAGE, NC 28327

DESIGNER

ANDRE JOHNSON ARCHITECT

PO BOX 14637
RALEIGH, NORTH CAROLINA 27620
TELEPHONE: 919.661.6935
MAIL: info@andrejohnsonarchitect.com

© 2015 Andre Johnson Architect, PLLC
Duplication or reproduction by any means without the express written consent of Andre L. Johnson, Architect is a violation of Federal and international law. The information contained on this document is the intellectual property of Andre L. Johnson, Architect and all rights thereto are Reserved. For exceptions, refer to the Owner-Architect Agreement.

CONSULTANT

RMF ENGINEERING, INC.
301 McCullough Drive, Suite 400
Charlotte, NC 28262

REGISTRATION

RMF ENGINEERING, INC. CERT. NO. C-1125 RALEIGH, N.C.

NORTH CAROLINA PROFESSIONAL SEAL 041471 ENGINEER BLAKE A. SMITH

Aug 5 2016

ISSUE

No.	Date	Description

SHEET INFO

MECHANICAL SCHEDULES

M800

PROJECT NO: P1423.00
DATE: AUGUST 5, 2016
BID DOCUMENTS

AIR HANDLING UNIT SCHEDULE

DESIG	SERVICE	FAN DATA									FILTER DATA		COOLING DATA																
		SERVICE / QTY.	CFM	OCCUPIED MINIMUM OA CFM	UNOCCUPIED MIN OA CFM	TSP INCH WG	ESP INCH WG	MOTOR (EACH)		RPM	PREFILTER	FILTER	EAT °F		LAT °F		TOTAL MBH	SENSIBLE MBH	REFRIGERANT	AMBIENT TEMP	MIN TOTAL FACE AREA SF	MAXIMUM FACE VELOCITY	NUMBER OF COILS	MAXIMUM FIN SPACING FIN/INCH	MAXIMUM AIR PD IN WG	ROWS	ELECTRICAL	BASIS OF DESIGN
								BHP	HP				DB	WB	DB	WB												
AHU-1	BUILDING	SUPPLY / 2	9505 CFM	1290 CFM	430 CFM	4.6	2.5	5.2	7.5	2286	MERV 8	MERV 14	78	69.5	53	52.5	337.2	260.8	R-410A	95 °F	21.2 SF	450 FPM	1	9	0.7	6	460/3/60	TRANE UCCAH21C0

1. FANS ARE 50% LOAD
2. INTERTWINED DX COOLING COIL WITH DUAL INDEPENDENT REFRIGERANT CIRCUITS
3. PROVIDE VFD TO OPERATE BOTH SUPPLY FANS. FAN MOTORS SHALL BE VFD RATED WITH GROUNDING RINGS

DUCTLESS SPLIT SYSTEM HEAT PUMP INDOOR UNIT SCHEDULE

OUTDOOR UNIT DESIGNATION	LOCATION	SUPPLY CFM	CAPACITY INFORMATION COOLING (MBH)	REMARKS
IU-1	ELECTRICAL 113	388-738	22.5	OU-1
IU-2	TELECOM 110	388-738	22.5	OU-2
IU-3	SERVER RM 126	388-738	22.5	OU-3

1. POWERED FROM OUTDOOR UNIT

DUCTLESS SPLIT SYSTEM HEAT PUMP OUTDOOR UNIT SCHEDULE

DESIG	LOCATION	COOLING (MBH)	COOLING EFFICIENCY (EER)	RATED SUMMER CONDITIONS °F		ELECTRICAL			REMARKS
				DB	WB	POWER	MCA	MCOP	
OU-1	ROOF	22.5	12.5 BTU/h/W	95	75	208/1/60	17.1	20	
OU-2	ROOF	22.5	12.5 BTU/h/W	95	75	208/1/60	17.1	20	
OU-3	ROOF	22.5	12.5 BTU/h/W	95	75	208/1/60	17.1	20	

1. PROVIDE FUSED DISCONNECT SWITCH

GRAVITY VENTILATOR SCHEDULE

DESIGNATION	SERVICE	DESIGN OUTSIDE AIR FLOW	THROAT AREA (SQ FT)	THROAT VELOCITY	TOTAL STATIC PRESSURE (IN. W.G.)	HOOD SIZE	HOOD HEIGHT	MIN # TIERS	BASIS OF DESIGN	REMARKS
GV-1	OUTSIDE AIR	9505 CFM	12.3 SF	800 FPM	0.11	42"x42"	3' - 2 1/2"	8	PENN BARRY PH	

CONDENSING UNIT SCHEDULE

DESIGNATION	HEAT REJECTION (MBH)	OUTDOOR AMBIENT	NO. OF FANS	ELECTRICAL			REFRIGERANT	REFRIGERANT CHARGE	EER MINIMUM	DIMEMSIONS (FEET)	WEIGHT LBS	BASIS OF DESIGN TRANE	REMARKS
				MCA	MOCP	VØ/HZ							
CU-1	180	95	2	32	40	460/3/60	R-410A	21.5	11.0	4 x 8 x 4	648	TRANE TTA180J4	1
CU-2	180	95	2	32	40	460/3/60	R-410A	21.5	11.0	4 x 8 x 4	648	TRANE TTA180J4	1

1. PROVIDE THREE POLE DISCONNECT SWITCH

VENTILATION CALCULATIONS

Project Name & #:	DOT Office Building							**% OA**	**0.134876381**		
System Name:	AHU 1	**10531**	**104**	**427.5**	**510**	**Is system CV or 100% OA? (Y/N)**	**N**	**Total OA**	**1282**	**9505**	**Total CFM**
					937.5	**Is system VAV? (Y/N)**	**Y**			**0.90**	
Space Inputs			**ASHRAE 62.1**			**HVAC Information**		**Ventilation**			
Room Name & Number	**Room Type**	**Area**	**Occ**	**Ra Az**	**Rp Pz**	**System Type**	**Ez**	**62.1 Min.**	**OA Design**	**SA Volume**	**% OA**
Vestibule 101	G-Corridors	87.00	0	5.22	0	Warm air supply <15 F	1	7.46	8	125	6%
Waiting 102	OB-Reception areas	181.00	6	10.86	30	Warm air supply <15 F	1	58.37	59	255	23%
Reception 103	OB-Reception areas	105.00	4	6.3	20	Warm air supply <15 F	1	37.57	38	115	33%
Womens RR 104	G-Corridors	238.00	0	14.28	0	Warm air supply <15 F	1	20.40		160	0%
Mens RR 105	G-Corridors	214.00	0	12.84	0	Warm air supply <15 F	1	18.34		160	0%
Janitor 106	G-Corridors	24.00	0	1.44	0	Warm air supply <15 F	1	2.06		0	
Copy 107	OB-Office space	221.00	2	13.26	10	Warm air supply <15 F	1	33.23	34	205	17%
Office 108	OB-Office space	149.00	1	8.94	5	Warm air supply <15 F	1	19.91	20	140	14%
Office 109	OB-Office space	152.00	1	9.12	5	Warm air supply <15 F	1	20.17	21	140	15%
Telecom 110		98.00				Warm air supply <15 F	1				
Workroom 111	OB-Office space	152.00	1	9.12	5	Warm air supply <15 F	1	20.17	21	140	15%
Office 112	OB-Office space	152.00	1	9.12	5	Warm air supply <15 F	1	20.17	21	140	15%
Electrical 113		135.00				Warm air supply <15 F	1				
Office 114	OB-Office space	182.00	1	10.92	5	Warm air supply <15 F	1	22.74	23	165	14%
Sm Conf 115	G-Conference/meeting	216.00	11	12.96	55	Warm air supply <15 F	1	97.09	98	170	58%
Office 116	OB-Office space	217.00	2	13.02	10	Warm air supply <15 F	1	32.89	33	365	9%
Office 117	OB-Office space	131.00	1	7.86	5	Warm air supply <15 F	1	18.37	19	215	9%
Office 118	OB-Office space	132.00	1	7.92	5	Warm air supply <15 F	1	18.46	19	215	9%
Office 119	OB-Office space	132.00	1	7.92	5	Warm air supply <15 F	1	18.46	19	190	10%
Office 120	OB-Office space	138.00	1	8.28	5	Warm air supply <15 F	1	18.97	19	250	8%
Shared Office 121	OB-Office space	299.00	2	17.94	10	Warm air supply <15 F	1	39.91	40	270	15%
Office 122	OB-Office space	137.00	1	8.22	5	Warm air supply <15 F	1	18.89	19	155	12%
Office 123	OB-Office space	138.00	1	8.28	5	Warm air supply <15 F	1	18.97	19	235	8%
IT Consult Wrkrm 124	OB-Office space	265.00	2	15.9	10	Warm air supply <15 F	1	37.00	37	165	22%
Office 125	OB-Office space	138.00	1	8.28	5	Warm air supply <15 F	1	18.97	19	180	11%
Server Rm 126		83.00				Warm air supply <15 F	1				
Office 127	OB-Office space	137.00	1	8.22	5	Warm air supply <15 F	1	18.89	19	205	9%
Office 128	OB-Office space	137.00	1	8.22	5	Warm air supply <15 F	1	18.89	19	190	10%
Break Room 129	OB-Breakrooms	176.00	9	21.12	45	Warm air supply <15 F	1	94.46	95	420	23%
Conference 130	G-Conference/meeting	682.00	35	40.92	175	Warm air supply <15 F	1	308.46	310	530	58%
Office 131	OB-Office space	121.00	1	7.26	5	Warm air supply <15 F	1	13.62	14	185	8%
Office 132	OB-Office space	124.00	1	7.44	5	Warm air supply <15 F	1	13.82	14	190	7%
Office 133	OB-Office space	133.00	1	7.98	5	Warm air supply <15 F	1	14.42	15	200	8%
Office 134	OB-Office space	133.00	1	7.98	5	Warm air supply <15 F	1	14.42	15	120	13%
Office 135	OB-Office space	152.00	1	9.12	5	Warm air supply <15 F	1	15.69	16	140	11%
File Work Room 136	OB-Office space	441.00	3	26.46	15	Warm air supply <15 F	1	46.07	47	330	14%
Shared Office 137	OB-Office space	313.00	2	18.78	10	Warm air supply <15 F	1	31.98	32	285	11%
Office 138	OB-Office space	208.00	2	12.48	10	Warm air supply <15 F	1	24.98	25	190	13%
Office 139	OB-Office space	131.00	1	7.86	5	Warm air supply <15 F	1	14.29	15	215	7%
Office 140	OB-Office space	130.00	1	7.8	5	Warm air supply <15 F	1	14.22	15	170	9%
Office 141	OB-Office space	131.00	1	7.86	5	Warm air supply <15 F	1	14.29	15	200	8%
Office 142	OB-Office space	130.00	1	7.8	5	Warm air supply <15 F	1	14.22	15	185	8%
Office 143	OB-Office space	135.00	1	8.1	5	Warm air supply <15 F	1	14.56	15	200	8%
Office 144	OB-Office space	144.00	1	8.64	5	Warm air supply <15 F	1	15.16	16	195	8%
Office 145	OB-Office space	143.00	1	8.58	5	Warm air supply <15 F	1	15.09	16	180	9%
Office 146	OB-Office space	144.00	1	8.64	5	Warm air supply <15 F	1	15.16	16	205	8%
Mechanical Room 147	G-Corridors	289.00	0	17.34	0	Warm air supply <15 F	1	19.27	20	100	20%
Corridor C107	G-Corridors	587.00	0	35.22	0	Warm air supply <15 F	1	39.13	21	180	12%
Corridor C101	G-Corridors	336.00	0	20.16	0	Warm air supply <15 F	1	22.40	23	105	22%
Corridor C102	G-Corridors	229.00	0	13.74	0	Warm air supply <15 F	1	15.27	16	85	19%
Corridor C103	G-Corridors	308.00	0	18.48	0	Warm air supply <15 F	1	20.53	21	95	22%
Corridor C104	G-Corridors	296.00	0	17.76	0	Warm air supply <15 F	1	19.73	20	90	22%
Corridor C105	G-Corridors	245.00	0	14.7	0	Warm air supply <15 F	1	16.33	17	85	20%
Corridor C106	G-Corridors	280.00	0	16.8	0	Warm air supply <15 F	1	18.67	19	75	25%

CLIENT AND PROJECT

NORTH CAROLINA DEPARTMENT OF TRANSPORTATION

SCO ID NO.: 14-11006-01A

NEW DIVISION 8 OFFICE BUILDING

150 DOT DRIVE
CARTHAGE, NC 28327

DESIGNER

ANDRE JOHNSON ARCHITECT
PO BOX 14637
RALEIGH, NORTH CAROLINA 27620
TELEPHONE: 919.661.6935
MAIL: info@andrejohnsonarchitect.com

© 2015 Andre Johnson Architect, PLLC
Duplication or reproduction by any means without the express written consent of Andre L. Johnson, Architect is a violation of Federal and international law. The information contained on this document is the intellectual property of Andre L. Johnson, Architect and all rights thereto are Reserved. For exceptions, refer to the Owner-Architect Agreement.

CONSULTANT

RMF ENGINEERING, INC.
301 McCullough Drive, Suite 400
Charlotte, NC 28262

REGISTRATION

RMF ENGINEERING, INC. CERT. NO. C-1125 RALEIGH, N.C.

NORTH CAROLINA PROFESSIONAL SEAL 041471 ENGINEER BLAKE A. SMITH

Aug 5 2016

ISSUE

No.	Date	Description

SHEET INFO

MECHANICAL SCHEDULES

M801

PROJECT NO: P1423.00
DATE: AUGUST 5, 2016
BID DOCUMENTS

ELECTRICAL SYMBOLS

ELECTRICAL DIAGRAMS AND SYMBOLS

SYMBOL	DESCRIPTION
N E L	AUTOMATIC TRANSFER DEVICE
A	METERING DEVICES: A - AMMETER, V - VOLTMETER, PF - POWER FACTOR, HZ - FREQUENCY METER
DM	DIGITAL METER
(50)	FUSE: FUSE SIZE AS INDICATED (50A)
	GROUND CONNECTION
	TRANSFORMER (DELTA - RESISTANCE GROUNDED WYE SHOWN)
	CURRENT TRANSFORMER
	POTENTIAL TRANSFORMER
	MOTOR STARTER CONTACTOR AND THERMAL OVERLOAD
TRIP FRAME	MOLDED CASE CIRCUIT BREAKER WITH RATINGS AS INDICATED
	SWITCH
TTB	TEST TERMINAL BLOCK
TB	WIRING TERMINAL BLOCK
R	INDICATOR OR PILOT LIGHT: R - RED, B - BLUE, W - WHITE, G - GREEN, A - AMBER
CB	ENCLOSED CIRCUIT BREAKER
FVNR	COMBINATION MAGNETIC MOTOR STARTER - ABBREVIATION INDICATES TYPE: FVNR, FVR, RVAT, 2S1W, 2S2W, SST
VFC	VARIABLE FREQUENCY CONTROLLER W/ FUSED DISCONNECT SWITCH
VFC	VARIABLE FREQUENCY CONTROLLER
2S2W	MOTOR - SINGLE WINDING UNLESS OTHERWISE NOTED: 2S2W = 2 SPEED, 2 WINDING 2S1W = 2 SPEED, 1 WINDING NUMERALS (IF SHOWN) INDICATE HP
	CONDUCTORS NOT CONNECTED
	CONDUCTORS CONNECTED
START	NORMALLY OPEN MOMENTARY CONTACT PUSH BUTTON W/ NAMEPLATE AS INDICATED ON DIAGRAM
STOP	NORMALLY CLOSED MOMENTARY CONTACT PUSH BUTTON W/ NAMEPLATE AS INDICATED ON DIAGRAM
EMERG. STOP	NORMALLY CLOSED MAINTAINED CONTACT PUSH BUTTON W/ MUSHROOM BUTTON
OFF ON	TWO POSITION MAINTAINED CONTACT SELECTOR SWITCH W/ NAMEPLATE AS INDICATED ON DIAGRAM
LOCAL OFF REMOTE XOO OOX	THREE POSITION MAINTAINED CONTACT SELECTOR SWITCH W/ NAMEPLATE AS INDICATED ON THE CONTROAL DIAGRAM: X = CLOSED O = OPEN
	NORMALLY CLOSED PRESSURE SWITCH - OPENS ON RISING PRESSURE
	NORMALLY OPEN PRESSURE SWITCH - CLOSES ON RISING PRESSURE
	NORMALLY CLOSED TEMPERATURE SWITCH - OPENS ON RISING TEMPERATURE
	NORMALLY OPEN TEMPERATURE SWITCH - CLOSES ON RISING TEMPERATURE
	NORMALLY CLOSED FLOW SWITCH - OPENS ON RISING FLOW
	NORMALLY OPEN FLOW SWITCH - CLOSES ON RISING FLOW
	NORMALLY CLOSED LEVEL SWITCH - OPENS ON RISING LEVEL
	NORMALLY OPEN LEVEL SWITCH - CLOSES ON RISING LEVEL
	NORMALLY CLOSED LIMIT SWITCH (HELD OPEN)
	NORMALLY CLOSED LIMIT SWITCH
	NORMALLY OPEN LIMIT SWITCH (HELD CLOSED)
	NORMALLY OPEN LIMIT SWITCH
R1	RELAY OR CONTACTOR COIL WITH TAG NUMBER AS SHOWN
	NORMALLY OPEN RELAY CONTACT
	NORMALLY CLOSED RELAY CONTACT
TD	ON-DELAY OR OFF-DELAY RELAY
	ON-DELAY RELAY NORMALLY CLOSED TIMED OPENING CONTACT
	ON-DELAY RELAY NORMALLY OPEN TIMED CLOSING CONTACT
	OFF-DELAY RELAY NORMALLY CLOSED CONTACT (OPENS WHEN ENERGIZED, TIMED CLOSING AFTER DE-ENERGIZING)
	OFF-DELAY RELAY NORMALLY OPEN CONTACT (CLOSED WHEN ENERGIZED, TIMED OPENING AFTER DE-ENERGIZING)
L U	LATCHING RELAY L = LATCH COIL U = UNLATCH COIL
	FIELD WIRING TERMINAL
	WIRING INSIDE ENCLOSURE
	FIELD WIRING
	FIELD WIRING

SPECIAL SYSTEMS SYMBOLS

SYMBOL	DESCRIPTION	MH (UON)
H	FIRE ALARM HORN TYPE SPEAKER	NOTE 5
	FIRE ALARM FLASHING STROBE LIGHT - WALL MOUNTED	NOTE 5
F	FIRE ALARM HORN	NOTE 5
F	COMBINATION FIRE ALARM HORN AND FLASHING STROBE LIGHT	NOTE 5
F C	COMBINATION FIRE ALARM HORN AND FLASHING STROBE LIGHT C = CEILING MOUNTED	CEILING HEIGHT
H	MAGNETIC DOOR HOLDER	
DACT	DIGITAL ALARM COMMUNICATOR TRANSMITTER	
FAAP	FIRE ALARM ANNUNCIATOR PANEL	
FACP	FIRE ALARM CONTROL PANEL	
RAM	RESCUE ASSISTANCE MASTER CONTROL PANEL	48" TOD
RAR	RESCUE ASSISTANCE REMOTE STATION	48" TOD
TP	FIRE ALARM TRANSPONDER	
DS ES	DOOR SOLENOID, ELECTRIC STRIKE - LOCKING DEVICE CONNECTION POINT	
F	FIRE ALARM PULL STATION	48" TOD
H E	HEAT DETECTOR: E = ELEVATOR CONTROLS	
P AB E	SMOKE DETECTOR (PHOTOELECTRIC): AB = AUDIBLE BASE, E = ELEVATOR CONTROLS	
	SMOKE DETECTOR (IONIZATION)	
	DUCT SMOKE DETECTOR	
	CO2 DETECTOR	
ARC	FIRE ALARM SYSTEM ADDRESSABLE RELAY - CONTROL	
ARM	FIRE ALARM SYSTEM ADDRESSABLE RELAY - MONITOR	
RAL	FIRE ALARM SYSTEM REMOTE ALARM LIGHT	
FS	FLOW SWITCH CONNECTION	
TS	TAMPER SWITCH CONNECTION	
FS	FLOW DETECTOR SWITCH	
TS	VALVE WITH TAMPER SWITCH	
LBT LBR	FIRE ALARM LINEAR BEAM SMOKE DETECTOR: TRANSMITTER (LBT) AND RECEIVER (LBR)	
F	FIRE FIGHTER'S TELEPHONE JACK	48" TOD
M	MONITOR SYSTEM JUNCTION BOX	36" CTR
S F	CEILING SPEAKER, F - FIRE ALARM	
S	HORN TYPE SPEAKER	
S	FIRE ALARM HORN AND LIGHT	
A	AMPLIFIER	
K	KEYPAD	48" TOD
CR	CARD READER	48" TOD
DA	DOOR ALARM CONTACT	
P	PUSH BUTTON PLATE	
	TELEPHONE OUTLET	18" CTR
W	TELEPHONE OUTLET, WALL MOUNTED	54" CTR
	TELEPHONE OUTLET, FLOOR MOUNTED	
	DATA/TELEPHONE OUTLET: UNSHADED AREA = DATA, SHADED AREA = VOICE NUMERALS INDICATE QUANTITY OF WIRED JACKS	18" CTR
	DATA/TELEPHONE OUTLET, FLOOR MOUNTED: UNSHADED AREA = DATA, SHADED AREA = VOICE NUMERALS INDICATE QUANTITY OF WIRED JACKS	
	DATA OUTLET, FLOOR MOUNTED	
E	TELEPHONE OUTLET, EMERGENCY	54" TOD
	DATA OUTLET	
WAP	WIRELESS ACCESS POINT	
	TELEVISION ANTENNA OUTLET	18" CTR
C	CABLE TV OUTLET	
	TELEVISION SYSTEM SPLITTER - 2 WAY, 4 WAY	
	DATA/TELEPHONE OUTLET, CEILING MOUNTED	
	ROUGH-IN JUNCTION BOX FOR CCTV CAMERA	

POWER SYMBOLS

SYMBOL	DESCRIPTION	MH (UON)
	SIMPLEX RECEPTACLE	18" CTR
C	SIMPLEX RECEPTACLE: CART RECHARGE	36" CTR
E	DUPLEX RECEPTACLE: 'E' (IF SHOWN) INDICATES CONNECTED TO EMERGENCY CIRCUIT	18" CTR
	DUPLEX RECEPTACLE: FLOOR MOUNTED	
	DUPLEX RECEPTACLE: SPLIT WIRED, BOTTOM HALF SWITCHED	18" CTR
	DUPLEX RECEPTACLE: CEILING MOUNTED	
	DUPLEX RECEPTACLE: PEDESTAL TYPE	
	DUPLEX RECEPTACLE: MOUNTED 6" ABOVE BACKSPLASH OR COUNTER	
GFI	DUPLEX RECEPTACLE: GROUND FAULT INTERRUPTER TYPE	18" BOD
GFI	DUPLEX RECEPTACLE: GFI MOUNTED 6" ABOVE BACKSPLASH OR COUNTER	84" CTR
H	DUPLEX RECEPTACLE: MOUNTED HIGH	18" BOD
IG	DUPLEX RECEPTACLE: ISOLATED GROUND	54" CTR
	DUPLEX RECEPTACLE: AT 54" A.F.F.	
P	DUPLEX RECEPTACLE: PAY PHONE	54" CTR
C	DUPLEX RECEPTACLE: CART RECHARGE	36" CTR
A	SPECIAL RECEPTACLE: NEMA 6-20R (20A, 2P, 3W, 208V)	18" CTR
B	SPECIAL RECEPTACLE: NEMA 6-30R (30A, 2P, 3W, 208V)	18" CTR
C	SPECIAL RECEPTACLE: NEMA 14-20R (20A, 3P, 4W, 208/120V)	18" CTR
D	SPECIAL RECEPTACLE: NEMA 15-30R (30A, 3P, 4W, 208V)	18" CTR
A	SPECIAL RECEPTACLE: FLOOR MOUNTED, NEMA 6-20R	
A	SPECIAL RECEPTACLE: PEDESTAL TYPE, NEMA 6-20R	
	DOUBLE DUPLEX RECEPTACLE	18" CTR
IG	DOUBLE DUPLEX RECEPTACLE ISOLATED GROUND	
	TELEVISION RECEPTACLE	72" CTR
H	TELEVISION RECEPTACLE	18" BFC
	CLOCK HANGER OUTLET	84" CTR
1 2	PROGRAM CLOCK OUTLET: SINGLE FACE, DOUBLE FACE	84" CTR
EPO	EMERGENCY POWER OFF SWITCH	48" TOD
J	JUNCTION BOX	
E	EQUIPMENT CONNECTION AS NOTED	
H 3	HEATER CONNECTION - NUMBER INDICATES KILOWATTS (3KW)	
H	HEATER FAN - CEILING MOUNTED	
CB	ENCLOSED CIRCUIT BREAKER	
	NON-FUSED DISCONNECT SWITCH: 30A, 3P (UON)	
40	FUSED DISCONNECT SWITCH: FUSE SIZE AS INDICATED (40A)	
MS	MAGNETIC MOTOR STARTER	
FVNR	COMBINATION MAGNETIC MOTOR STARTER: ABBREVIATION INDICATES TYPE - FVNR, FVR, RVAT, 2S1W, 2S2W, SST	
VFC	VARIABLE FREQUENCY CONTROLLER W/ FUSED DISCONNECT SWITCH	
VFD	VARIABLE FREQUENCY DRIVE	
TVSS	TRANSIENT VOLTAGE SURGE SUPPRESSION	
M HP	MOTOR: NUMERALS (IF SHOWN) INDICATE HP	
G kW	GENERATOR: NUMERALS (IF SHOWN) INDICATE KW	
$M	MANUAL MOTOR STARTER W/ THERMAL OVERLOADS	
CP	CONTROL PANEL: TYPE AS INDICATED	
PB	MOMENTARY CONTACT START-STOP PUSHBUTTON STATION	
PBM	MAINTAINED CONTACT START-STOP PUSHBUTTON STATION	
ES	MAINTAINED CONTACT EMERGENCY STOP PUSHBUTTON STATION	
	BRANCH PANELBOARD	
	DISTRIBUTION PANELBOARD	
T	TRANSFORMER	

POWER SYMBOLS

SYMBOL	DESCRIPTION	MH (UON)
	RACEWAY "UP" OR "TOWARDS"	
	RACEWAY "DOWN" OR "AWAY"	
	CIRCUIT CONCEALED IN WALLS OR CEILING SPACE: CONDUCTORS SHALL BE MINIMUM 2#12 AWG AND 1#12 AWG GROUND IN 3/4" CONDUIT (UON)	
	RACEWAY CONCEALED IN SLAB OR BELOW GRADE	
	BRANCH CIRCUIT HOMERUN TO PANELBOARD: QUANTITY OF CIRCUITS INDICATED BY ARROWS NUMBER OF CONDUCTORS SHALL BE MINIMUM 4#12 AWG AND 1#12 AWG GROUND IN 3/4" CONDUIT (UON)	
	RACEWAY RUN EXPOSED: CONDUCTORS SHALL BE MINIMUM 2#12 AWG AND 1#12 AWG GROUND IN 3/4" CONDUIT (UON)	
	BUS DUCT OR CABLE TRAY "UP" OR "TOWARDS"	
	BUS DUCT OR CABLE TRAY "DOWN" OR "AWAY"	
	BUS DUCT: TYPE AND SIZE AS INDICATED	
	TELEPHONE AND POWER POLE ASSEMBLY	
	CONCRETE ENCASED DUCTBANK BELOW GRADE	
W	SURFACE MOUNTED RACEWAY ASSEMBLY WITH REMOVABLE COVER	
	MULTI-OUTLET ASSEMBLY: DARK SQUARES INDICATE PREWIRED RECEPTACLE LOCATIONS SIZE AS INDICATED	
	MULTI-OUTLET ASSEMBLY: WITH RECEPTACLES LOCATED WHERE INDICATED	
	2 CELL MULTI-OUTLET ASSEMBLY: WITH COMMUNICATION DEVICES AND RECEPTACLES LOCATED WHERE INDICATED	
	MULTI-OUTLET ASSEMBLY: WITH COMMUNICATION DEVICES LOCATED WHERE INDICATED	
	FLEXIBLE CONDUIT	
	CABLE TRAY	
	GROUND ROD	
X	LIGHTNING PROTECTION AIR TERMINAL	
G G	GROUND WIRE CONNECTION	
G G G	GROUND WIRE	
	LIGHTNING PROTECTION DOWN LEAD	
	UTILITY POLE	

LIGHTING SYMBOLS

SYMBOL	DESCRIPTION	MH (UON)
$	SINGLE POLE TOGGLE SWITCH	48" TOD
$a	SWITCH: SUB-LETTER INDICATES FIXTURES CONTROLLED (a)	48" TOD
$2	DOUBLE POLE TOGGLE SWITCH	48" TOD
$3	THREE-WAY TOGGLE SWITCH (SPDT)	48" TOD
$4	FOUR-WAY TOGGLE SWITCH (DPDT)	48" TOD
$K	KEY OPERATED SWITCH	48" TOD
$3D a	THREE WAY DIMMER SWITCH: SUBLETTER INDICATES FIXTURES CONTROLLED (a)	48" TOD
$M	MANUAL STARTER W/ OVERLOADS	48" TOD
$P	SWITCH W/ PILOT LIGHT	48" TOD
$D	DIMMER SWITCH	48" TOD
$4D	4 BUTTON DIMMER SWITCH	48" TOD
$LV	LOW VOLTAGE CONTROL SWITCH	48" TOD
$T	MANUAL TIME SWITCH	48" TOD
$C	MOMENTARY CONTACT SWITCH	48" TOD
$WP	SWITCH WITH WEATHERPROOF ENCLOSURE	48" TOD
OS OS	OCCUPANCY SENSOR (CEILING & WALL MOUNTED)	
T	TIME CLOCK	
R	RELAY	
L	LIGHTING CONTACTOR	
P	PHOTOCELL OR PUSHPLATE SWITCH	
	FLUORESCENT LIGHTING FIXTURE: RECESSED, SURFACE, OR PENDANT MOUNTED - TYPE AS SPECIFIED	
	FLUORESCENT LIGHTING FIXTURE: 2 BALLAST	
	FLUORESCENT LIGHTING FIXTURE: INDUSTRIAL	
	FLUORESCENT LIGHTING FIXTURE: WALL MOUNTED - TYPE AS SPECIFIED	
	LIGHTING FIXTURE: RECESSED, SURFACE, OR PENDANT MOUNTED	
	LIGHTING FIXTURE: WALL MOUNTED - TYPE AS SPECIFIED	
	WALL WASHER	
	ADJUSTABLE WALL WASHER	
	LIGHTING FIXTURE ON EMERGENCY OR NIGHT LIGHT CIRCUIT	
	EMERGENCY BATTERY PACK: W/ NUMBER OF HEADS INDICATED	
E	EMERGENCY BATTERY PACK: W/ REMOTE HEADS	
	REMOTE EMERGENCY HEAD	
	EMERGENCY BATTERY PACK: SEMI RECESSED, CEILING MOUNT	
	EXIT SIGN: CEILING OR PENDANT MOUNTED (SHADED PORTION INDICATES FACE)	
	EXIT SIGN: WALL MOUNTED - END, BACK	
	EXIT SIGN: W/ DIRECTIONAL ARROWS	
	POLE MOUNTED LIGHTING FIXTURE: SINGLE HEAD, DOUBLE HEAD	
	POLE MOUNTED LIGHTING FIXTURE: SINGLE, POLE TOP	
	LIGHTING POLE (SPORTS)	

CIRCUIT DESIGNATIONS

LIGHTING A # a

- FIXTURE TYPE
- CIRCUIT DESIGNATION (SEE NOTES FOR PANEL DESIGNATIONS FOR EACH AREA)
- SWITCH DESIGNATION

POWER #

- CIRCUIT DESIGNATION (SEE NOTES FOR PANEL DESIGNATIONS FOR EACH AREA)

ELECTRICAL SYMBOLS NOTES

1. THIS IS A STANDARD SYMBOL LIST. SOME SYMBOLS MAY NOT APPEAR ON THE ACCOMPANYING DRAWINGS.
2. REFER TO SPECIFICATIONS FOR DETAILED REQUIREMENTS.
3. PLAN AND SECTION SYMBOLS MAY ALSO BE USED ON RISER DIAGRAMS.
4. ON SINGLE LINE DIAGRAMS FOR 3 PHASE SYSTEMS, DEVICE QUANTITY = 3, UNLESS OTHERWISE NOTED.
5. DEVICE SHALL BE MOUNTED A MINIMUM OF 90" AFF TO BOTTOM OF DEVICE OR BELOW THE FINISHED CEILING OF NOT LESS THAN 6" TO TOP OF DEVICE.
6. UNLESS OTHERWISE NOTED, ALL INTERIOR CONDUITS AND BOXES SHALL BE CONCEALED.

CLIENT AND PROJECT

NORTH CAROLINA DEPARTMENT OF TRANSPORTATION

SCO ID NO.: 14-11006-01A

NEW DIVISION 8 OFFICE BUILDING

150 DOT DRIVE
CARTHAGE, NC 28327

DESIGNER

ANDRE JOHNSON ARCHITECT

PO BOX 14637
RALEIGH, NORTH CAROLINA 27620
TELEPHONE: 919.661.6935
MAIL: info@andrejohnsonarchitect.com

© 2015 Andre Johnson Architect, PLLC
Duplication or reproduction by any means without the express written consent of Andre L. Johnson, Architect is a violation of Federal and international law. The information contained on this document is the intellectual property of Andre L. Johnson, Architect and all rights thereto are Reserved. For exceptions, refer to the Owner-Architect Agreement.

CONSULTANT

RMF ENGINEERING, INC.
301 McCullough Drive, Suite 400
Charlotte, NC 28262

REGISTRATION

RMF ENGINEERING, INC. CERT. NO. C-1125 RALEIGH, N.C.

NORTH CAROLINA PROFESSIONAL SEAL 040879 ENGINEER DAVID P. FALCINELLI, JR.

Aug 5 2016

ISSUE

No.	Date	Description

SHEET INFO

ELECTRICAL NOTES AND SYMBOLS LEGEND

E001

PROJECT NO: P1423.00
DATE: AUGUST 5, 2016
BID DOCUMENTS

GENERAL ELECTRICAL NOTES

1. ALL WORK SHALL BE PERFORMED IN ACCORDANCE WITH THE NORTH CAROLINA CODES AND THE LOCAL FIRE MARSHALL'S REQUIREMENTS.
2. THIS CONTRACTOR SHALL BE RESPONSIBLE FOR COORDINATING WITH ALL OTHER TRADES/ SUBCONTRACTORS INCLUDING BUT NOT LIMITED TO AUTOMATIC TEMPERATURE CONTROLS, ELECTRICAL, AND GENERAL TRADES.
3. CONTRACTOR SHALL MAINTAIN ACCESS TO ALL EGRESS CORRIDORS DURING CONSTRUCTION.
4. ALL PENETRATIONS IN THE SMOKE BARRIER OR FIRE WALLS MUST BE SEALED WITH AN APPROVED UL LISTED FIRE STOP MATERIAL AFTER SERVICES ARE RUN THROUGH. ALL PENETRATIONS THROUGH EXTERIOR WALLS ABOVE AND BELOW GRADE OR SLAB ON GRADE MUST BE WATERPROOFED.
5. CONTRACTOR SHALL FIELD VERIFY ALL DIMENSIONS AND SITE CONDITIONS BEFORE COMMENCING WORK.
6. THIS CONTRACT REQUIRES COMPLETE, FINISHED WORKABLE PROJECT OF THE AREAS INDICATED BY THE CONTRACT DOCUMENTS, AND SHALL INCLUDE ALL MATERIALS AND LABOR NECESSARY TO COMPLETE SAME, REGARDLESS OF WHETHER OR NOT EACH AND EVERY NECESSARY WORK OR ITEM IS SPECIFICALLY INDICATED ON ANY OTHER PORTION OF THE DRAWING AND/OR NOTES.
7. ALL DETAILS AND SECTIONS SHOWN ON THE DRAWINGS ARE INTENDED TO BE TYPICAL AND SHALL BE CONSTRUED TO APPLY TO ANY SIMILAR SITUATION ELSEWHERE ON THE PROJECT, EXCEPT WHERE A DIFFERENT DETAIL IS SHOWN.
8. CONTRACTOR SHALL FURNISH ALL ADDITIONAL DATA AND DOCUMENTATION TO SECURE ALL REQUIRED PERMITS AND SHALL COORDINATE THIS DATA WITH THE CONSTRUCTION DOCUMENTS WHERE REQUIRED.
9. AS A MINIMUM, ALL WORK SHALL CONFORM TO THE INTERNATIONAL BUILDING CODE 2012 WITH NORTH CAROLINA STATE AMENDMENTS. WHERE MORE STRINGENT CODES ARE ADOPTED, THEY SHALL GOVERN THE WORK.
10. ALL WORK SHALL CONFORM TO APPLICABLE FEDERAL, STATE, COUNTY AND LOCAL CODES AND ORDINANCES.
11. TO PROVIDE ACCESSIBILITY FOR THE PHYSICALLY HANDICAPPED, ALL WORK SHALL CONFORM TO PUBLIC LAW 101-336 (AMERICANS WITH DISABILITIES ACT OF 1993).
12. ALL WORK SHALL CONFORM TO THE 2012 NFPA 101-LIFE SAFETY CODE.
13. AROUND ALL EXPOSED PIPES, CONDUIT OR DUCTS, INSTALL ENCLOSURES OF THE SAME MATERIAL AND FINISH AS ADJACENT WORK, UNLESS NOTED OTHERWISE.
14. FIELD CHECK ALL ROUGH AND/OR FINISH DIMENSIONS FOR ACCURATE FITTING OF EQUIPMENT, CABINETS, COUNTERS, FIXTURES AND ACCESSORIES BEFORE FABRICATION. PROVIDE AND INSTALL ALL NECESSARY FILLERS, SCRIBE STRIPS, PANELS, BASES OR TRIM TO COMPLETE AND FINISH INSTALLATIONS.
15. ALL SWITCHES, OUTLETS, THERMOSTATS, CLOCKS, SPEAKERS OR OTHER WALL MOUNTED DEVICES OR CONTROLS SHALL BE INSTALLED IN LOCATIONS WHICH ARE UNOBSTRUCTED BY CABINETS, COUNTERS, RACKS, FIXTURES, FURNISHINGS OR EQUIPMENT. ITEMS INTENDED FOR WALL MOUNTING SHALL NOT BE INSTALLED ON, THROUGH OR INTO ANY OTHER EQUIPMENT UNLESS SPECIFICALLY CALLED FOR. VERIFY MOUNTING HEIGHTS WITH ADA REQUIREMENTS.
16. PROVIDE AND INSTALL ALL NECESSARY HARDWARE, BRACKETS, BRACING, ANCHORING, INSERTS, BLOCKING, FURRING OR OTHER SUPPLEMENTARY ITEMS NEEDED FOR COMPLETE INSTALLATION OF EQUIPMENT, CABINETS, FIXTURES, AND ACCESSORIES.
17. ALL CONTRACTORS ARE TO COORDINATE THE WORK OF EACH OTHER, SO THAT THE WORK AND SCHEDULE ARE NOT IMPEDED. SCHEDULE WORK PROGRESS THROUGHOUT THE ENTIRE PROJECT TO PREVENT CONFLICTS AND INTERFERENCE, OBTAIN ALL NECESSARY INFORMATION SUCH AS SIZES, LOCATIONS, TEMPLATES, LAYOUT, DIMENSIONS AND ALL OTHER INFORMATION NECESSARY FOR A PROPER AND WELL COORDINATED INSTALLATION. PRIOR TO INSTALLATION OF ITEMS, CONFER WITH EACH CONTRACTOR EXACT LOCATION OF ALL ITEMS.
18. WHERE MATERIALS REFERENCED ON DRAWINGS, OR NECESSARY TO COMPLETE THE WORK OF THIS CONTRACT ARE NOT SPECIFIED HEREIN, PROVIDE BEST QUALITY MATERIALS. WHERE MATERIALS ARE INTENDED TO MATCH EXISTING, PROVIDE CLOSEST POSSIBLE MATCH, SUBJECT TO OWNER'S APPROVAL. ALL ITEMS AND WORK ON DRAWINGS ARE NEW UNLESS INDICATED OTHERWISE. ALL WORK WHICH HAS BEEN DAMAGED SHALL BE REPAIRED OR REPLACED. WHERE ITEM CANNOT BE REPAIRED TO A "NEW CONDITION", OR WHERE THE STRUCTURAL INTEGRITY HAS BEEN AFFECTED, ITEM SHALL BE REPLACED.
19. CONTRACTOR SHALL OBTAIN FROM OWNER ALL REQUIREMENTS FOR INSTALLATION OF OWNER PROVIDED EQUIPMENT INCLUDING ROUGHING DIAGRAMS, INSTALLATION INSTRUCTIONS, ELECTRICAL SCHEMATICS, TEMPLATES, LAYOUTS AND DIMENSIONS AND ALL OTHER INFORMATION NECESSARY FOR A PROPER, WELL COORDINATED INSTALLATION. PRIOR TO ROUGH-IN SERVICES, CONFER WITH OWNER EXACT LOCATION OF ALL ITEMS.
20. ALL CONDUIT SHALL BE ROUTED CONCEALED IN WALLS EXCEPT IN ELECTRICAL/DATA ROOMS, OR WHERE INDICATED ON DRAWINGS.
21. THERE SHALL BE NO CONDUIT PENETRATIONS THROUGH SHEAR WALLS. COORDINATE LOCATIONS WITH STRUCTURAL PLANS.
22. CONDUIT SHALL NOT BE ROUTED IN SLAB EXCEPT TO SERVE SLAB ON GRADE AREA FLOOR BOXES AND/OR ISLAND MILLWORK.
23. ALL 120V, 15A & 20A BRANCH CIRCUIT FEEDERS WITH TOTAL CONDUCTOR LENGTH GREATER THAN 100-FT BUT LESS THAN 200-FT SHALL BE MINIMUM #10 AWG, THOSE GREATER THAN 200-FT SHALL BE #8 AWG.
24. COORDINATE MECHANICAL AIR DEVICE EQUIPMENT LOCATIONS AND QUANTITIES WITH DIVISION 23 DOCUMENTS. DEVICES INDICATED ON MECHANICAL DRAWINGS AND MISSING FROM ELECTRICAL DRAWINGS SHALL BE CIRCUITED TO NEAREST ADJACENT AIR DEVICE EQUIPMENT CIRCUIT. ALL 120V, 15A & 20A RECEPTACLES WITHIN 6-FT OF THE OUTSIDE EDGE OF A SINK SHALL BE GFI PROTECTED PER NEC ARTICLE 210.8.
25. PROVIDE 25% SPARE 20A - CIRCUIT BREAKERS FOR ALL BRANCH PANELBOARDS. REFER TO SINGLE LINE DIAGRAMS E6.01 FOR SWITCHBOARD AND SWITCHGEAR SPARE CIRCUIT BREAKER QUANTITIES AND SIZES.
26. ALL ABOVE GRADE FEEDER CONDUITS SHALL BE RIGID METAL CONDUIT. BELOW GRADE FEEDER CONDUITS SHALL BE SCHEDULE 40 PVC WHERE ENCASED IN CONCRETE AND SCHEDULE 80 PVC WHERE NOT. BRANCH CONDUIT FEEDER CONDUITS SHALL BE EMT AT DRY, INDOOR LOCATIONS WHERE NOT EXPOSED TO SEVERE PHYSICAL DAMAGE.
27. ALL ELECTRICAL EQUIPMENT FURNISHED BY THIS CONTRACTOR SHALL BE THIRD PARTY LISTED.
28. FOR ALL VAV CONNECTIONS, ELECTRICAL CONTRACTOR SHALL SUPPLY POWER TO EXTERNALLY MOUNTED DISCONNECT SWITCH PROVIDED BY MECHANICAL CONTRACTOR. COORDINATE EXACT LOCATION WITH MECHANICAL CONTRACTOR PRIOR TO INSTALLATION. MECHANICAL CONTRACTOR SHALL PROVIDE AND INSTALL VAV BOX EQUIPMENT AND DISCONNECT AND TRANSFORMER, WITH CONDUCTOR BETWEEN THESE DEVICES.
29. FOR PLAN AREAS INDICATED WITH CALLOUTS, REFER TO ENLARGED PLAN INDICATED FOR ALL EQUIPMENT AND DEVICES NOT SHOWN ON 1/8" SCALE PLANS.
30. ALL 15 AMP AND 20 AMP CIRCUITS INDICATED IN PANEL SCHEDULES SHALL HAVE MINIMUM #12 CONDUCTORS, AND #12 GROUND, CU. UNLESS NOTED OTHERWISE. COORDINATE FINAL CONDUCTOR SIZE BASED ON VOLTAGE DROP PER NEC REQUIREMENTS. REFER TO SPECIFICATIONS.
31. ALL TRANSFORMERS SHALL HAVE PRIMARY DISCONNECTING MEANS LOCATED EITHER WITHIN SIGHT OF TRANSFORMER OR IN REMOTE LOCATION PER NEC 450.14. WHERE LOCATED IN REMOTE LOCATION, THE DISCONNECTING MEANS SHALL BE LOCKABLE, AND THE LOCATION SHALL BE FIELD MARKED ON THE TRANSFORMER.
32. COORDINATE FINAL LOCATION OF ALL TV AND AV RECEPTACLES WITH AV DRAWINGS AND ARCHITECTURAL DRAWINGS PRIOR TO ROUGH-IN.
33. ALL ELECTRIC WATER COOLER (EWC) LOCATIONS SHALL BE PROVIDED WITH GROUND FAULT PROTECTION, AND DISCONNECTION MEANS IN ACCORDANCE WITH NEC ARTICLE 422.31.
34. ALL 120V RECEPTACLES SHALL BE GFCI PROTECTED WITHIN BREAK ROOM AREA, UNLESS OTHERWISE NOTED.

GENERAL LIGHTING NOTES

1. REFER TO SHEET 7.01 FOR GENERAL LIGHTING NOTES.

ELECTRICAL ABBREVIATIONS

NOTE: THIS IS A STANDARD ABBREVIATION LIST. SOME ABBREVIATIONS MAY NOT APPEAR ON THE ACCOMPANYING DRAWINGS.

2S1W	2 SPEED SINGLE WINDING
2S2W	2 SPEED DOUBLE WINDING
A, AMP	AMPERE
A/C	AIR CONDITIONING
AC	ALTERNATING CURRENT
AFF	ABOVE FINISHED FLOOR
AFG	ABOVE FINAL GRADE
AHU	AIR HANDLING UNIT
AIC	AMPS INTERRUPTING CAPACITY
ALT	ALTERNATE
ANN	ANNUNCIATOR
APPROX	APPROXIMATELY
ARCH	ARCHITECT
ATC	AUTOMATIC TEMPERATURE CONTROL
ATS	AUTOMATIC TRANSFER SWITCH
AV	AUDIOVISUAL
AWG	AMERICAN WIRE GAUGE
BAS	BUILDING AUTOMATION SYSTEM
BFC	BELOW FINISHED CEILING
BFG	BELOW FINISHED GRADE
BLDG	BUILDING
BOD	BOTTOM OF DEVICE
C, CND	CONDUIT
CATV	CABLE TELEVISION
CB	CIRCUIT BREAKER
CCTV	CLOSED CIRCUIT TELEVISION
CKT	CIRCUIT
CL	CURRENT LIMITING
CLG	CEILING
CONN	CONNECT
CPT	CONTROL POWER TRANSFORMER
CT	CURRENT TRANSFORMER
CTR	CENTER
CU, CO	COPPER
CX	CONNECT TO EXISTING
DC	DIRECT CURRENT
DISC	DISCONNECT
DN	DOWN
DP	DISTRIBUTION PANEL
DPDT	DOUBLE POLE DOUBLE THROW
DPST	DOUBLE POLE SINGLE THROW
DT	DOUBLE THROW
DWG	DRAWING
E, EMERG	EMERGENCY
EA	EACH
EC	EMPTY CONDUIT
EF	EXHAUST FAN
EH	ELECTRIC HEATER
ELEC	ELECTRIC
ELEV	ELEVATION
ETR	EXISTING TO REMAIN
EWC	ELECTRIC WATER COOLER
EX	EXISTING
EXP	EXPOSED
FA	FIRE ALARM
FAAP	FIRE ALARM ANNUNCIATOR PANEL
FACP	FIRE ALARM CONTROL PANEL
FBO	FURNISHED BY OTHERS
FC	FAN COIL
FDR	FEEDER
FLA	FULL LOAD AMPERES
FLR	FLOOR
FR	FRAME
FU	FUSED, FUSIBLE
FUSS	FUSED SAFETY SWITCH
FVNR	FULL VOLTAGE NON-REVERSING
FVR	FULL VOLTAGE REVERSING
GEN	GENERATOR, GENERAL
GFI	GROUND FAULT INTERRUPTER
GFR	GROUND FAULT RELAY
GRD	GROUND
GRS	GALVANIZED RIGID STEEL
HID	HIGH INTENSITY DISCHARGE
HOA	HAND-OFF-AUTOMATIC
HP	HEAT PUMP, HORSEPOWER
HPS	HIGH PRESSURE SODIUM
HTR	HEATER
HV	HIGH VOLTAGE
HZ	HERTZ
IG	ISOLATED GROUND
JB	JUNCTION BOX
KCMIL	THOUSAND CIRCULAR MILS
KV	KILOVOLTS
KVA	KILOVOLT AMPERES
KVAR	KILOVOLT AMPERES REACTIVE
KW	KILOWATTS
KWH	KILOWATT HOUR
LA	LIGHTNING ARRESTOR
LC	LIGHTING CONTRACTOR
LP	LIGHTING PANEL
LRA	LOCKED ROTOR AMPERES
LTG	LIGHTING
LTNG	LIGHTNING
MATV	MASTER ANTENNA TELEVISION
MCB	MAIN CIRCUIT BREAKER
MCC	MOTOR CONTROL CENTER
MEH	METAL HALIDE
MH	MANHOLE, MOUNTING HEIGHT
MLO	MAIN LUGS ONLY
MSP	MOTOR STARTER PANEL
MTD	MOUNTED
MV	MERCURY VAPOR
NC	NORMALLY CLOSED
NEC	NATIONAL ELECTRIC CODE
NFSS	NON-FUSED SAFETY SWITCH
NO	NUMBER, NORMALLY OPEN
OC	ON CENTER
OFCI	OWNER FURNISHED CONTRACTOR INSTALLED
OFOI	OWNER FURNISHED OWNER INSTALLED
OH	OVERHEAD
P	POLE
PB	PUSHBUTTON
PF	POWER FACTOR
PFCC	POWER FACTOR CORRECTION CAPACITOR
PL	PILOT LIGHT
PLC	PROGRAMMABLE LIGHTING CONTROL
PNL	PANEL
PP	POWER PANEL
Pp	PUMP
PR	PAIR
PT	POTENTIAL TRANSFORMER
PVC	POLYVINYL CHLORIDE
Ø, PH	PHASE
QTY	QUANTITY
RCS	REMOTE CONTROL SWITCH
REC, RECPT	RECEPTACLE
REQD	REQUIRED
RFI	RADIO FREQUENCY INTERFERENCE
RGS	RIGID GALVANIZED STEEL
RLA	RUNNING LOAD AMPERES
RM	ROOM
RVAT	REDUCED VOLTAGE AUTO TRANSFORMER
RX	REMOVE EXISTING
SC	SURGE CAPACITOR
SEC	SECONDARY
SN, S/N	SOLID NEUTRAL
SP	SURGE PROTECTION
SPDT	SINGLE POLE DOUBLE THROW
SS	SAFETY SWITCH
SST	SOLID STATE
ST	SINGLE THROW
SW	SWITCH
SWBD	SWITCHBOARD
TBR	TO BE REMOVED
TC	TIME CLOCK
TEL, TELE	TELEPHONE
TH	TUNGSTEN HALOGEN
TOD	TOP OF DEVICE
TRANS, XFMR	TRANSFORMER
TTB	TELEPHONE TERMINAL BOARD
TW	TWISTED
TYP	TYPICAL
UCB	UNIT CIRCUIT BREAKER
UG	UNDERGROUND
UH	UNIT HEATER
UON	UNLESS OTHERWISE NOTED
UV	UNIT VENTILATOR
V	VOLTS
VFC	VARIABLE FREQUENCY CONTROLLER
W	WATTS, WIRE
W/	WITH
WP	WEATHER-PROOF
XFMR, TRANS	TRANSFORMER
XP	EXPLOSION PROOF

CLIENT AND PROJECT

NORTH CAROLINA DEPARTMENT OF TRANSPORTATION

SCO ID NO.: 14-11006-01A

NEW DIVISION 8 OFFICE BUILDING

150 DOT DRIVE
CARTHAGE, NC 28327

DESIGNER

ANDRE JOHNSON ARCHITECT
PO BOX 14637
RALEIGH, NORTH CAROLINA 27620
TELEPHONE: 919.661.6935
MAIL: info@andrejohnsonarchitect.com

© 2015 Andre Johnson Architect, PLLC
Duplication or reproduction by any means without the express written consent of Andre L. Johnson, Architect is a violation of Federal and international law. The information contained on this document is the intellectual property of Andre L. Johnson, Architect and all rights thereto are Reserved. For exceptions, refer to the Owner-Architect Agreement.

CONSULTANT

RMF ENGINEERING, INC.
301 McCullough Drive, Suite 400
Charlotte, NC 28262

REGISTRATION

Aug 5 2016

ISSUE

No. Date Description

SHEET INFO

ELECTRICAL GENERAL NOTES AND ABBREVIATIONS

E002

PROJECT NO: P1423.00
DATE: AUGUST 5, 2016
BID DOCUMENTS

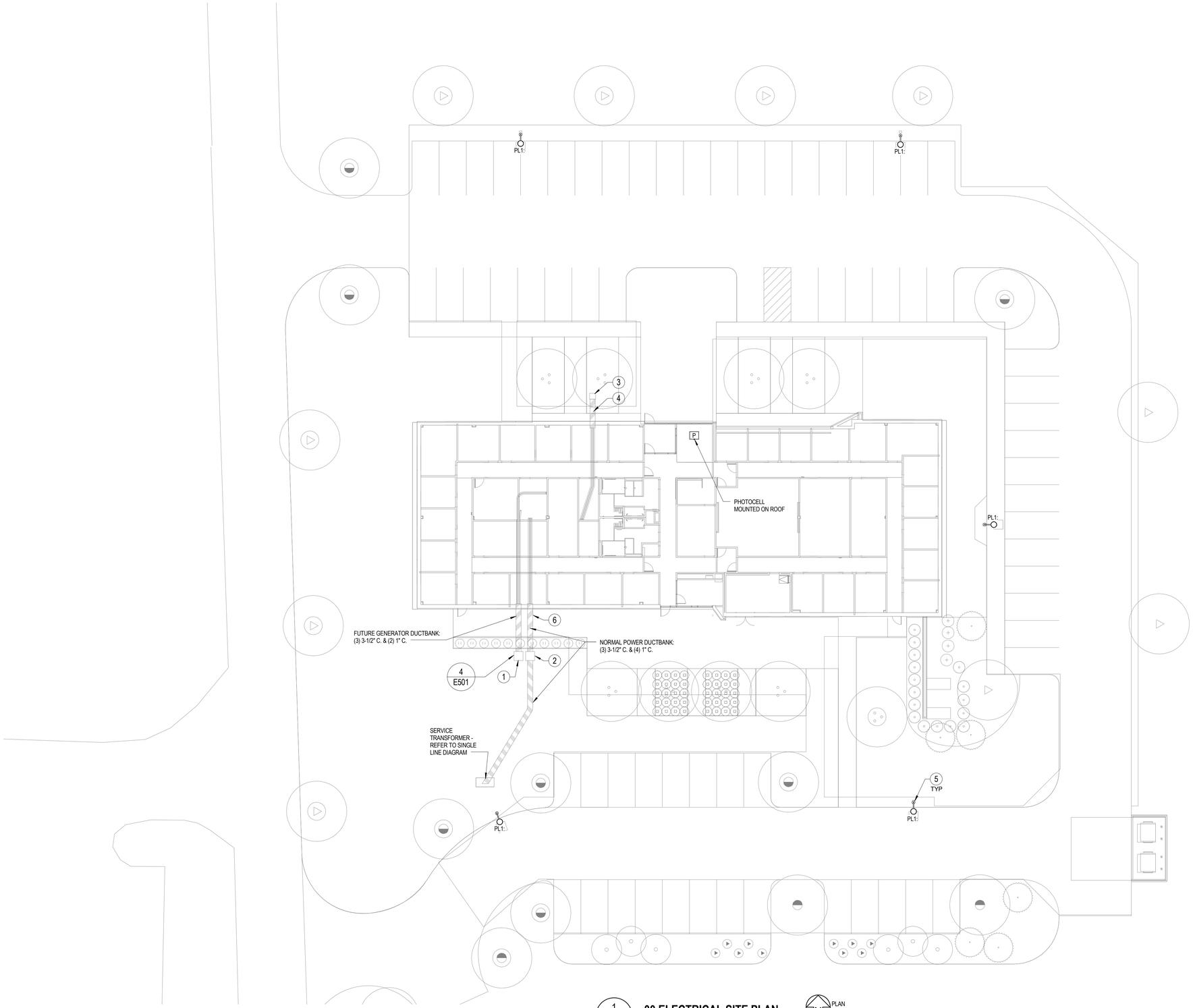

1 / E003 **00 ELECTRICAL SITE PLAN**

SCALE: 1/16" = 1'-0"

PLAN NORTH

GRAPHIC SCALE

16 8 0 16 32

SCALE: 1/16" = 1'-0"
UNIT OF MEASURE: FEET

GENERAL NOTES

1. COORDINATE DUCT BANK LOCATIONS AND DEPTHS WITH MECHANICAL AND STRUCTURAL CONTRACTORS PRIOR TO INSTALLATION.
2. REFER TO CIVIL PLANS FOR FINAL LOCATIONS OF EQUIPMENT DEVICES.
3. REFER TO A001 FOR LOCATION OF IN WALL LIGHT FIXTURE LOCATIONS. REFERERENCE CIVIL SITE PLAN FOR FINAL LOCATION OF SITE LIGHTING FIXTURES, ELECTRICAL DRAWINGS SHALL NOT BE SCALED.
4. ALL SITE LIGHTING FIXTURES SHALL BE CIRCUITED TO PANEL 'LHN1', UNLESS NOTED OTHERWISE.

DRAWING NOTES

1. PROVIDE DUCTBANK TERMINATED AT HANDHOLE LOCATION FOR FUTURE GENERATOR CONNECTION. REFER TO DETAIL 4/E504.
2. PROVIDE DUCTBANK FROM TRANSFORMER TO BELOW BUILDING SLAB AS SHOWN. SERVICE CONDUIT LOCATED BELOW BUILDING SLAB SHALL BE DIRECT BURIED WITHOUT CONCRETE ENCASEMENT WHERE PROTECTED BY MINIMUM 4" CONCRETE FLOOR SLAB. REFER TO DETAIL 5/E504.
3. TELECOM HANDHOLE LOCATED IN LANDSCAPE AREA ADJACENT TO PAVEMENT, SEE DETAIL ON SHEET E501. COORDINATE FINAL LOCATION WITH TELECOMMUNICATIONS PROVIDER AND LANDSCAPE DRAWINGS.
4. PROVIDE DUCTBANK FROM HANDHOLE LOCATION TO MAIN TELECOM ROOM AS SHOWN. CONDUIT LOCATED BELOW BUILDING SLAB SHALL BE DIRECT BURIED WITHOUT CONCRETE ENCASEMENT WHERE PROTECTED BY MINIMUM 4" CONCRETE FLOOR SLAB. REFER TO SHEET E603 FOR TELECOM RISER DIAGRAM.
5. SITE LIGHTING PROVIDED BY UTILITY COMPANY. FIXTURE TYPE "PL1"LOCATIONS SHOWN FOR REFERENCE ONLY.
6. DUCTBANK SHALL BE INSTALLED BELOW STORM DRAIN. COORDINATE FINAL MOUNTING DEPTH AND REQUIREMENTS WITH CIVIL DRAWINGS.

CLIENT AND PROJECT

NORTH CAROLINA DEPARTMENT OF TRANSPORTATION

SCO ID NO.: 14-11006-01A

NEW DIVISION 8 OFFICE BUILDING

150 DOT DRIVE
CARTHAGE, NC 28327

DESIGNER

ANDRE JOHNSON ARCHITECT

PO BOX 14637
RALEIGH, NORTH CAROLINA 27620
TELEPHONE: 919.661.6935
MAIL: info@andrejohnsonarchitect.com

© 2015 Andre Johnson Architect, PLLC
Duplication or reproduction by any means without the express written consent of Andre L. Johnson, Architect is a violation of Federal and international law. The information contained on this document is the intellectual property of Andre L. Johnson, Architect and all rights thereto are Reserved. For exceptions, refer to the Owner-Architect Agreement.

CONSULTANT

RMF ENGINEERING, INC.
301 McCullough Drive, Suite 400
Charlotte, NC 28262

REGISTRATION

RMF ENGINEERING, INC. P.A. CERT. NO. C-1125 RALEIGH, N.C.

NORTH CAROLINA PROFESSIONAL SEAL 040879 ENGINEER DAVID P. FALCINELLI, JR.

Aug 5 2016

ISSUE

No.	Date	Description

SHEET INFO

ELECTRICAL SITE PLAN

E003

PROJECT NO: P1423.00
DATE: AUGUST 5, 2016
BID DOCUMENTS

GENERAL NOTES

1. REFER TO SHEET E002 FOR ADDITIONAL GENERAL NOTES.
2. MAINTAIN DEDICATED ELECTRICAL SPACE PER NEC 110.26. REFER TO SHEET E501.
3. REFER TO MOTOR AND CONTROL SCHEDULES ON SHEET E702 FOR CIRCUITING INFORMATION ON ALL EQUIPMENT CONNECTIONS. TYPICAL ALL POWER PLANS AND ENLARGED PLANS.
4. COORDINATE FINAL LOCATIONS OF VFD'S AND DDCP PANELS WITH MECHANICAL PLANS PRIOR TO ROUGH-IN.
5. ALL RECEPTACLES LOCATED OUTDOORS SHALL BE WEATHERPROOF, GFI TYPE.
6. ALL ELECTRICAL EQUIPMENT LOCATED OUTDOORS SHALL HAVE NEMA TYPE 3R ENCLOSURES.

DRAWING NOTES

1. RECEPTACLE SHALL BE INSTALLED BELOW COUNTER AT 24" AFF. COORDINATE WITH ARCHITECTURAL DETAILS AND CASEWORK INSTALLER PRIOR TO ROUGH-IN, SEE SHEET A001.
2. PROVIDE JUNCTION BOX MOUNTED FLUSH TO BRICK FACADE, WITH BLANK OFF COVERS AND CONDUIT WITH PULL STRING ROUTED TO ABOVE CEILING. COVERPLATE TO MATCH BRICK COLOR, FINAL SELECTION SHALL BE APPROVED BY ARCHITECT. COORDINATE FINAL MOUNTING HEIGHT AND LOCATION WITH ARCHITECT PRIOR TO ROUGH-IN.
3. PROVIDE JUNCTION BOX ABOVE CEILING FOR FUTURE PROJECTOR. PROJECTOR SHALL BE HARDWIRED WITH DISCONNECTING MEANS IN ACCORDANCE WITH NEC ARTICLE 422.31.
4. PROVIDE RECEPTACLE CONTROL RELAY SWITCHPACK TO CONTROL 50% OF ALL 20A RECEPTACLES WITHIN THIS SPACE. UPPER OUTLETS SHALL REMAIN UNSWITCHED, AND LOWER OUTLETS SHALL BE SWITCHED VIA LOCAL OCCUPANCY SENSOR THAT SHALL TURN OFF CONTROLLED RECEPTACLES WITHIN 30 MINUTES OF OCCUPANT LEAVING SPACE.

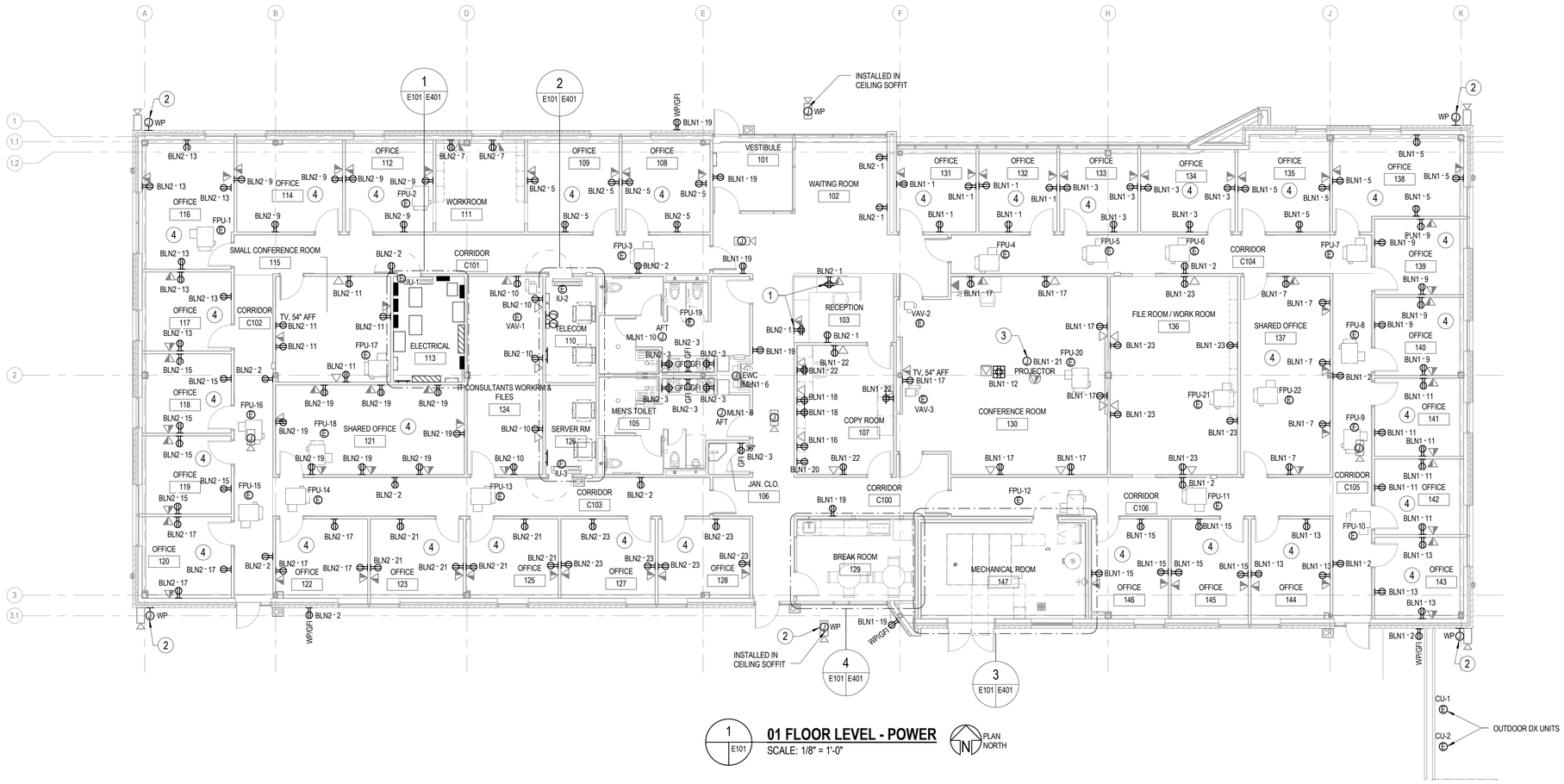

01 FLOOR LEVEL - POWER

SCALE: 1/8" = 1'-0"

PLAN NORTH

GRAPHIC SCALE

8 4 0 8 16

SCALE: 1/8" = 1'-0"
UNIT OF MEASURE: FEET

WALL TYPE LEGEND

3A — WALL TYPE SYMBOL - REFER TO SHEET A500-A502 FOR WALL TYPE CONSTRUCTION & RATINGS

NEW UNRATED STUD WALL

CLIENT AND PROJECT

NORTH CAROLINA DEPARTMENT OF TRANSPORTATION

SCO ID NO.: 14-11006-01A

NEW DIVISION 8 OFFICE BUILDING

150 DOT DRIVE
CARTHAGE, NC 28327

DESIGNER

ANDRE JOHNSON ARCHITECT

PO BOX 14637
RALEIGH, NORTH CAROLINA 27620
TELEPHONE: 919.661.6935
MAIL: info@andrejohnsonarchitect.com

© 2015 Andre Johnson Architect, PLLC
Duplication or reproduction by any means without the express written consent of Andre L. Johnson, Architect is a violation of Federal and international law. The information contained on this document is the intellectual property of Andre L. Johnson, Architect and all rights thereto are Reserved. For exceptions, refer to the Owner-Architect Agreement.

CONSULTANT

RMF ENGINEERING, INC.
301 McCullough Drive, Suite 400
Charlotte, NC 28262

REGISTRATION

RMF ENGINEERING, INC. CERT. NO. C-1125 RALEIGH, NC

NORTH CAROLINA PROFESSIONAL SEAL 040879 ENGINEER DAVID P. FALCINELLI, JR.

Aug 5 2016

ISSUE

No.	Date	Description

SHEET INFO

ELECTRICAL POWER PLAN

E101

PROJECT NO: P1423.00
DATE: AUGUST 5, 2016
BID DOCUMENTS

GENERAL NOTES

1. REFER TO MOTOR AND CONTROL SCHEDULES ON SHEET E702 FOR CIRCUITING INFORMATION ON ALL EQUIPMENT CONNECTIONS. TYPICAL ALL POWER PLANS AND ENLARGED PLANS.

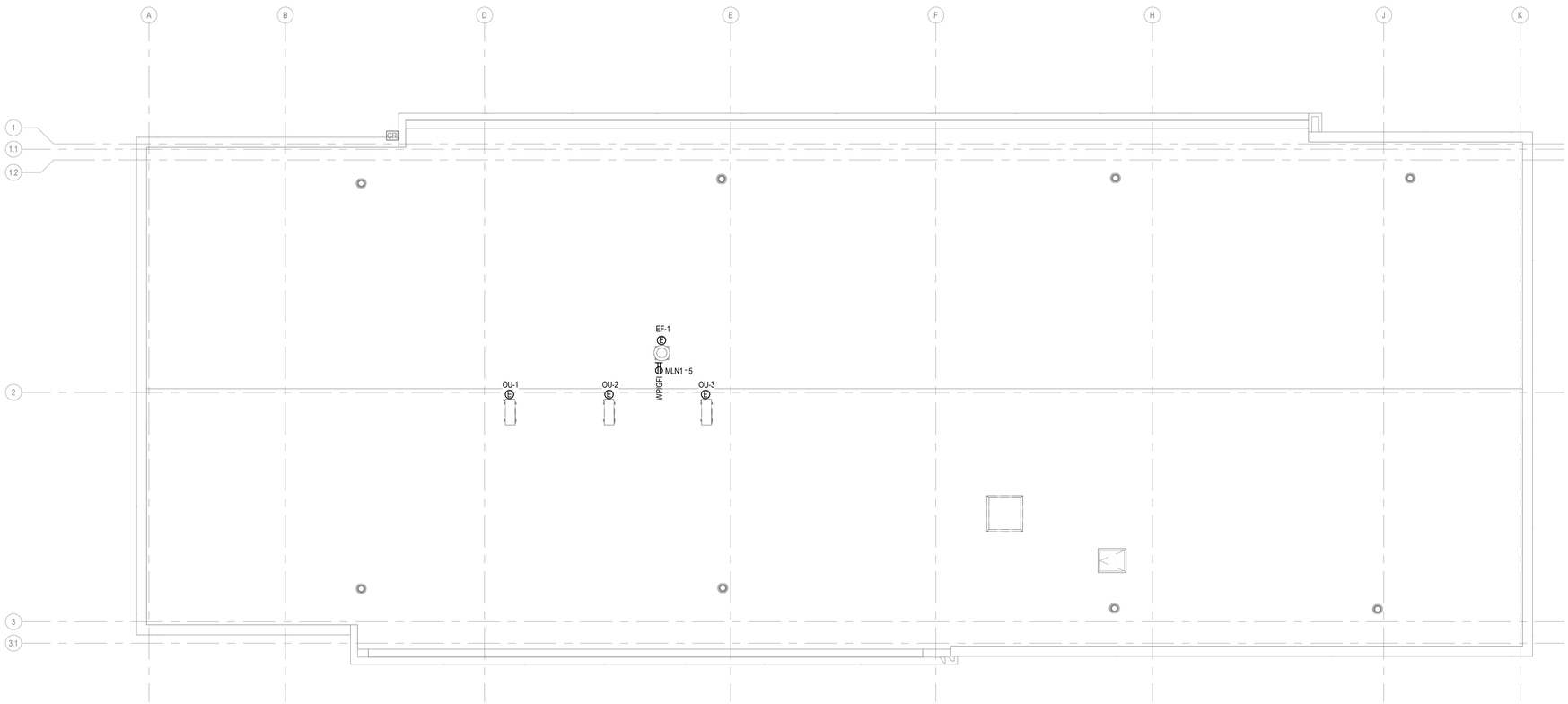

1 / E102 **02 ROOF LEVEL - POWER**
SCALE: 1/8" = 1'-0"

PLAN NORTH

GRAPHIC SCALE
8 4 0 8 16
SCALE: 1/8" = 1'-0"
UNIT OF MEASURE: FEET

WALL TYPE LEGEND

3A — WALL TYPE SYMBOL - REFER TO SHEET A500-A502 FOR WALL TYPE CONSTRUCTION & RATINGS

NEW UNRATED STUD WALL

CLIENT AND PROJECT

NORTH CAROLINA DEPARTMENT OF TRANSPORTATION

SCO ID NO.: 14-11006-01A

NEW DIVISION 8 OFFICE BUILDING

150 DOT DRIVE
CARTHAGE, NC 28327

DESIGNER

ANDRE JOHNSON ARCHITECT

PO BOX 14637
RALEIGH, NORTH CAROLINA 27620
TELEPHONE: 919.661.6935
MAIL: info@andrejohnsonarchitect.com

© 2015 Andre Johnson Architect, PLLC
Duplication or reproduction by any means without the express written consent of Andre L. Johnson, Architect is a violation of Federal and international law. The information contained on this document is the intellectual property of Andre L. Johnson, Architect and all rights thereto are Reserved. For exceptions, refer to the Owner-Architect Agreement.

CONSULTANT

RMF ENGINEERING, INC.
301 McCullough Drive, Suite 400
Charlotte, NC 28262

REGISTRATION

RMF ENGINEERING, INC. CERT. NO. C-1125 RALEIGH, NC

NORTH CAROLINA PROFESSIONAL SEAL 040879 ENGINEER DAVID P. FALCINELLI, JR.

Aug 5 2016

ISSUE

No.	Date	Description

SHEET INFO

ELECTRICAL POWER ROOF PLAN

E102

PROJECT NO: P1423.00
DATE: AUGUST 5, 2016
BID DOCUMENTS

GENERAL NOTES

1. REFER TO SHEET E002 FOR ADDITIONAL GENERAL NOTES AND E701 FOR ADDITIONAL GENERAL LIGHTING NOTES AND LIGHTING CONTROL SEQUENCE OF OPERATIONS.
2. COORDINATE ALL FINAL LIGHT FIXTURE LOCATIONS AND MOUNTING REQUIREMENTS WITH ARCHITECTURAL DRAWINGS PRIOR TO ROUGH-IN.
3. COORDINATE FINAL LOCATIONS OF LIGHT FIXTURES IN MECHANICAL / EQUIPMENT ROOMS WITH FINAL LAYOUT OF DUCTWORK AND EQUIPMENT TO AVOID CONFLICTS.
4. EMERGERNCY LIGHT FIXTURES INDICATED ON PLANS SHALL BE CIRCUITED TO A NORMAL CIRCUIT AND SHALL BE PROVIDED WITH BATTERY PACK CAPABLE OF POWERING FIXTURE FOR MINIMUM OF 90 MINUTES WITH UNSWITCHED VOLTAGE SENSING INPUT TO DETECT LOSS OF POWER, PER NEC REQUIREMENTS.
5. LIGHTING SHALL BE CONNECTED TO EITHER LIGHTING CONTROL PANEL WITH MANUAL USER OVER-RIDE OR OCCUPANCY SENSORS WITH POWER PACKS AND/OR SWITCHES AS SHOWN ON PLANS, UNLESS OTHERWISE NOTED. REFER TO DETAIL SHEETS FOR MORE INFORMATION ON TYPICAL SENSOR WIRING DIAGRAMS. REFER TO SPECIFICATIONS FOR ADDITIONAL DETAILS.
6. COORDINATE FINAL LOCATIONS OF EXIT SIGNAGE WITH LIFE SAFETY PLANS.
7. ALL LIGHTING CIRCUITS SHALL BE CONNECTED TO PANEL LHN1, UNLESS NOTED OTHERWISE.

DRAWING NOTES

1. LIGHTS CONTROLLED VIA PHOTOCELL AND BUILDING TIMER/CONTROL CIRCUIT. REFER TO DETAILS ON SHEET E506. EMERGENCY EGRESS LIGHTING FIXTURES SHALL BE POWERED FROM EMERGENCY INVERTER LOCATED IN ELECTRICAL ROOM UPON NORMAL POWER FAILURE.
2. LIGHTING IN THIS AREA TO BE CONTROLLED VIA LIGHTING CONTROL PANEL WITH MANUAL USER OVER-RIDE. REFER TO SHEET E506 FOR LIGHTING CONTROL DIAGRAM. LOCAL SWITCHING SHALL ALSO BE PROVIDED WHERE INDICATED ON PLAN.
3. PROVIDE WALL MOUNTED EMERGENCY LIGHTING INVERTER FOR EXTERIOR EMERGENCY EGRESS LIGHTING. SYSTEM SHALL BE SELF CONTAINED, UL924 LISTED AND LABELLED.

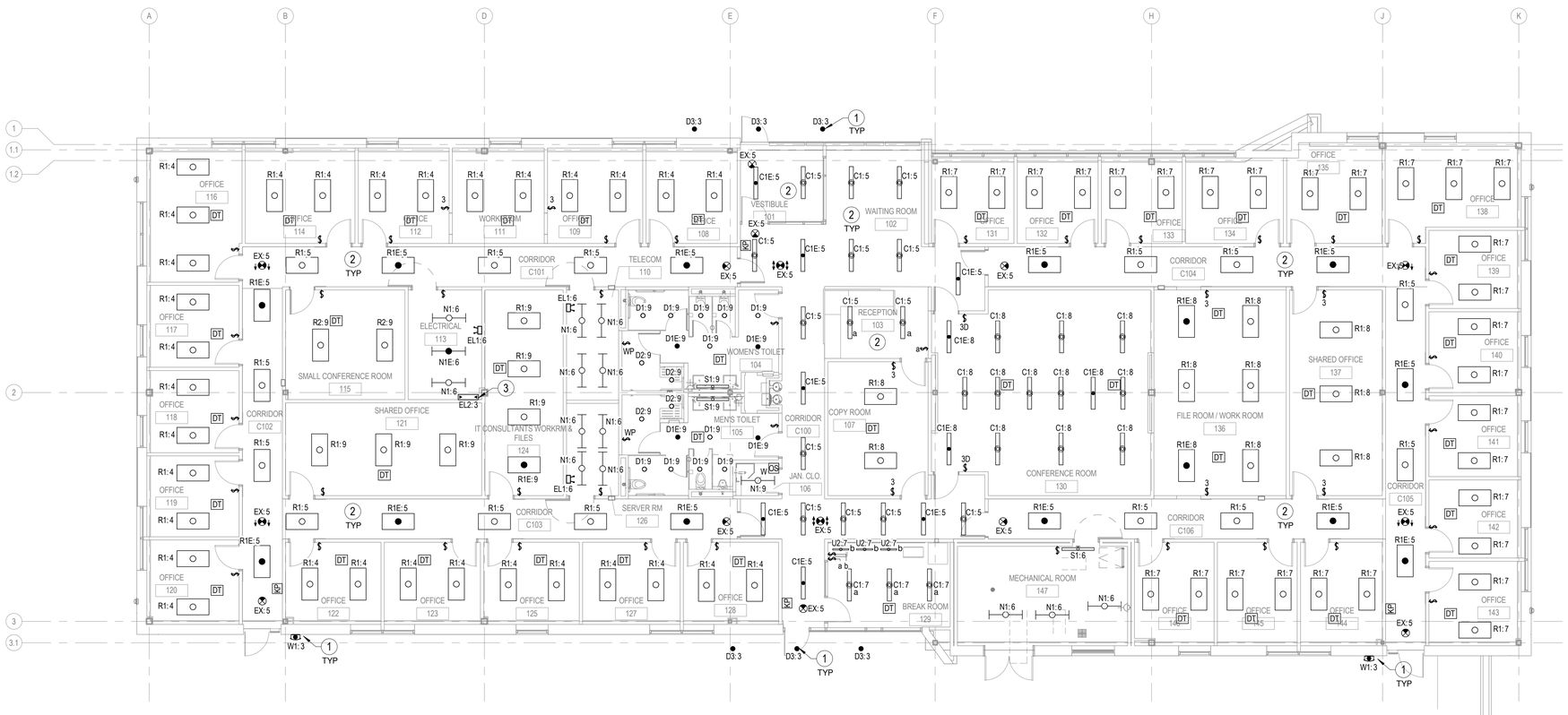

1 E201 **01 FLOOR LEVEL - LIGHTING**
SCALE: 1/8" = 1'-0"

PLAN NORTH

GRAPHIC SCALE
8 4 0 8 16
SCALE: 1/8" = 1'-0"
UNIT OF MEASURE: FEET

WALL TYPE LEGEND

3A — WALL TYPE SYMBOL - REFER TO SHEET A500-A502 FOR WALL TYPE CONSTRUCTION & RATINGS

NEW UNRATED STUD WALL

CLIENT AND PROJECT

NORTH CAROLINA DEPARTMENT OF TRANSPORTATION

SCO ID NO.: 14-11006-01A

NEW DIVISION 8 OFFICE BUILDING

150 DOT DRIVE
CARTHAGE, NC 28327

DESIGNER

ANDRE JOHNSON ARCHITECT
PO BOX 14637
RALEIGH, NORTH CAROLINA 27620
TELEPHONE: 919.661.6935
MAIL: info@andrejohnsonarchitect.com

© 2015 Andre Johnson Architect, PLLC
Duplication or reproduction by any means without the express written consent of Andre L. Johnson, Architect is a violation of Federal and international law. The information contained on this document is the intellectual property of Andre L. Johnson, Architect and all rights thereto are Reserved. For exceptions, refer to the Owner-Architect Agreement.

CONSULTANT

RMF ENGINEERING, INC.
301 McCullough Drive, Suite 400
Charlotte, NC 28262

REGISTRATION

RMF ENGINEERING, INC. P.A. CERT. NO. C-1125 RALEIGH N.C.

NORTH CAROLINA PROFESSIONAL SEAL 040879 ENGINEER DAVID P. FALCINELLI, JR.

Aug 5 2016

ISSUE

No.	Date	Description

SHEET INFO

ELECTRICAL LIGHTING PLAN

E201

PROJECT NO: P1423.00
DATE: AUGUST 5, 2016
BID DOCUMENTS

GENERAL NOTES

1. ALL FIRE ALARM DEVICES LOCATED WITHIN PUBLIC VIEW SHALL BE WHITE. REFER TO SPECIFICATIONS.

DRAWING NOTES

1 FIRE ALARM CONTROL PANEL (FACP), REFER TO SHEET E602 AND SPECIFICATIONS.

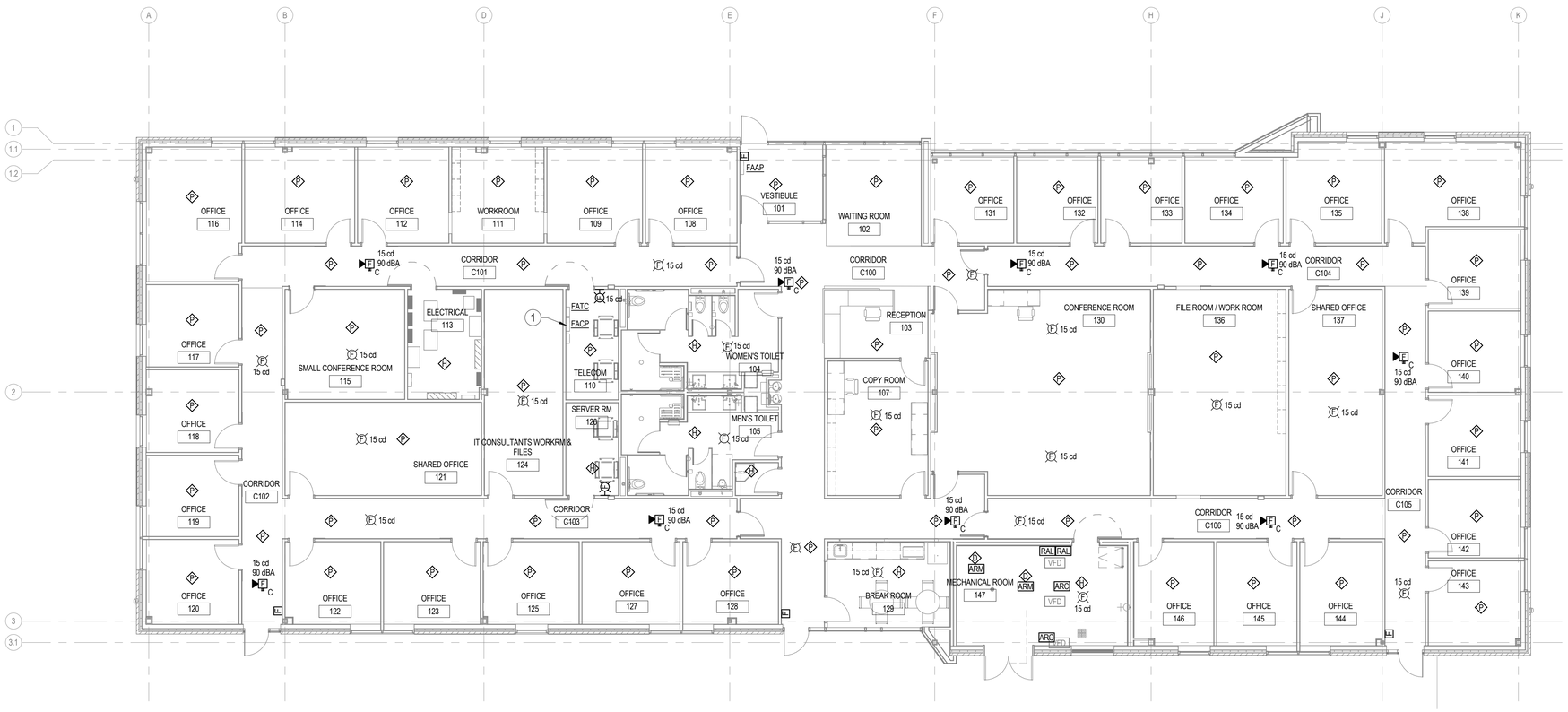

1 E301 **01 FLOOR LEVEL - FIRE ALARM**
SCALE: 1/8" = 1'-0"

PLAN NORTH

GRAPHIC SCALE
8 4 0 8 16
SCALE: 1/8" = 1'-0"
UNIT OF MEASURE: FEET

AVERAGE AMBIENT SOUND LEVELS			
ROOM NUMBER	ROOM NAME	OCCUPANCY TYPE	AVERAGE AMBIENT SOUND LEVEL (dBA)
101	VESTIBULE	PLACE OF ASSEMBLY	55
102	WAITING ROOM	PLACE OF ASSEMBLY	55
103	RECEPTION	PLACE OF ASSEMBLY	55
104	WOMEN'S TOILET	RESIDENTIAL	35
105	MEN'S TOILET	RESIDENTIAL	35
106	JAN. CLO.	STORAGE	30
107	COPY ROOM	BUSINESS	55
108	OFFICE	INSTITUTIONAL	50
109	OFFICE	INSTITUTIONAL	50
110	TELECOM	STORAGE	30
111	WORKROOM	INSTITUTIONAL	50
112	OFFICE	INSTITUTIONAL	50
113	ELECTRICAL	STORAGE	30
114	OFFICE	INSTITUTIONAL	50
115	SMALL CONFERENCE ROOM	INSTITUTIONAL	50
116	OFFICE	INSTITUTIONAL	50
117	OFFICE	INSTITUTIONAL	50
118	OFFICE	INSTITUTIONAL	50
119	OFFICE	INSTITUTIONAL	50
120	OFFICE	INSTITUTIONAL	50
121	SHARED OFFICE	INSTITUTIONAL	50
122	OFFICE	INSTITUTIONAL	50
123	OFFICE	INSTITUTIONAL	50
124	IT CONSULTANTS WORKRM & FILES	INSTITUTIONAL	50
125	OFFICE	INSTITUTIONAL	50
126	SERVER RM	INSTITUTIONAL	50
127	OFFICE	INSTITUTIONAL	50
128	OFFICE	INSTITUTIONAL	50
129	BREAK ROOM	INSTITUTIONAL	50
130	CONFERENCE ROOM	INSTITUTIONAL	50
131	OFFICE	INSTITUTIONAL	50
132	OFFICE	INSTITUTIONAL	50
133	OFFICE	INSTITUTIONAL	50
134	OFFICE	INSTITUTIONAL	50
135	OFFICE	INSTITUTIONAL	50
136	FILE ROOM / WORK ROOM	INSTITUTIONAL	50
137	SHARED OFFICE	INSTITUTIONAL	50
138	OFFICE	INSTITUTIONAL	50
139	OFFICE	INSTITUTIONAL	50
140	OFFICE	INSTITUTIONAL	50
141	OFFICE	INSTITUTIONAL	50
142	OFFICE	INSTITUTIONAL	50
143	OFFICE	INSTITUTIONAL	50
144	OFFICE	INSTITUTIONAL	50
145	OFFICE	INSTITUTIONAL	50
146	OFFICE	INSTITUTIONAL	50
147	MECHANICAL ROOM	MECHANICAL ROOM	85
C100	CORRIDOR	PLACE OF ASSEMBLY	55
C101	CORRIDOR	PLACE OF ASSEMBLY	55
C102	CORRIDOR	PLACE OF ASSEMBLY	55
C103	CORRIDOR	PLACE OF ASSEMBLY	55
C104	CORRIDOR	PLACE OF ASSEMBLY	55
C105	CORRIDOR	PLACE OF ASSEMBLY	55
C106	CORRIDOR	PLACE OF ASSEMBLY	55

WALL TYPE LEGEND

3A WALL TYPE SYMBOL - REFER TO SHEET A500-A502 FOR WALL TYPE CONSTRUCTION & RATINGS

NEW UNRATED STUD WALL

CLIENT AND PROJECT

NORTH CAROLINA DEPARTMENT OF TRANSPORTATION

SCO ID NO.: 14-11006-01A

NEW DIVISION 8 OFFICE BUILDING

150 DOT DRIVE
CARTHAGE, NC 28327

DESIGNER

ANDRE JOHNSON ARCHITECT

PO BOX 14637
RALEIGH, NORTH CAROLINA 27620
TELEPHONE: 919.661.6935
MAIL: info@andrejohnsonarchitect.com

© 2015 Andre Johnson Architect, PLLC
Duplication or reproduction by any means without the express written consent of Andre L. Johnson, Architect is a violation of Federal and international law. The information contained on this document is the intellectual property of Andre L. Johnson, Architect and all rights thereto are Reserved. For exceptions, refer to the Owner-Architect Agreement.

CONSULTANT

RMF ENGINEERING, INC.
301 McCullough Drive, Suite 400
Charlotte, NC 28262

REGISTRATION

RMF ENGINEERING, INC. CERT. NO. C-1125 RALEIGH, N.C.

NORTH CAROLINA PROFESSIONAL SEAL 044879 ENGINEER DAVID P. FALCINELLI, JR.

Aug 25 2016

ISSUE

No.	Date	Description

SHEET INFO

ELECTRICAL FIRE ALARM PLAN

E301

PROJECT NO: P1423.00
DATE: AUGUST 5, 2016
BID DOCUMENTS

DRAWING NOTES

1. SECURITY EQUIPMENT TO BE PROVIDED AND INSTALLED BY OWNER. REFER TO POWER PLANS FOR ROUGH-IN REQUIREMENTS.
2. OUTLET FOR WALL MOUNTED TELEPHONE. COORDINATE FINAL MOUNTING HEIGHT WITH ARCHITECTURAL PLANS PRIOR TO ROUGH-IN.
3. PROVIDE CABLE TRAY AS INDICATED ON PLANS. MOUNT CABLE TRAY ABOVE CEILING AT 11 FEET AFF. REFER TO DETAILS ON SHEET E509.
4. PROVIDE 2 DATA PORTS IN FLOOR BOX WITH RECEPTACLES, REFER TO SHEET E101 FOR POWER REQUIREMENTS.

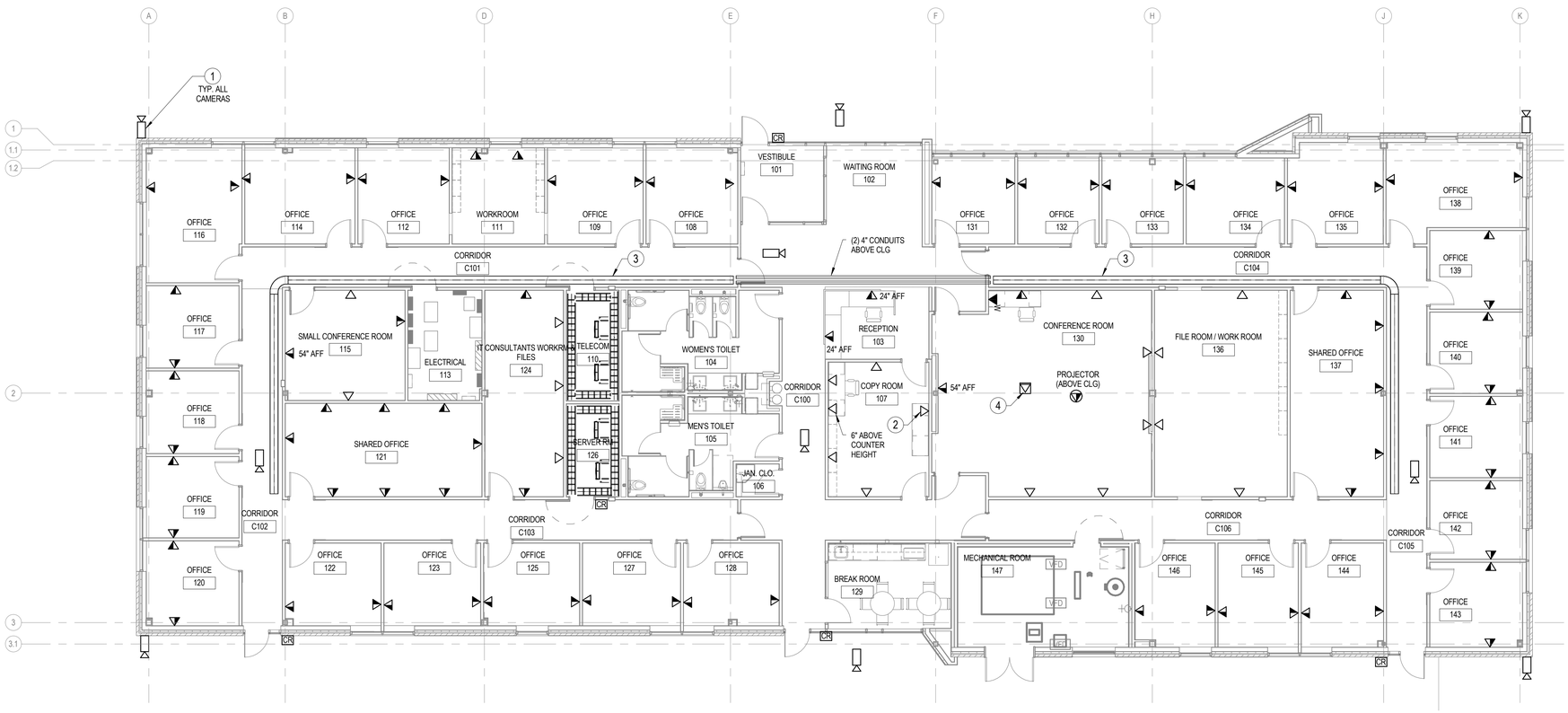

1 / E311 **01 FLOOR LEVEL - SPECIAL SYSTEMS**
SCALE: 1/8" = 1'-0"

PLAN NORTH

GRAPHIC SCALE
8 4 0 8 16
SCALE: 1/8" = 1'-0"
UNIT OF MEASURE: FEET

WALL TYPE LEGEND

3A — WALL TYPE SYMBOL - REFER TO SHEET A500-A502 FOR WALL TYPE CONSTRUCTION & RATINGS

NEW UNRATED STUD WALL

CLIENT AND PROJECT

NORTH CAROLINA DEPARTMENT OF TRANSPORTATION

SCO ID NO.: 14-11006-01A

NEW DIVISION 8 OFFICE BUILDING

150 DOT DRIVE
CARTHAGE, NC 28327

DESIGNER

ANDRE JOHNSON ARCHITECT

PO BOX 14637
RALEIGH, NORTH CAROLINA 27620
TELEPHONE: 919.661.6935
MAIL: info@andrejohnsonarchitect.com

© 2015 Andre Johnson Architect, PLLC
Duplication or reproduction by any means without the express written consent of Andre L. Johnson, Architect is a violation of Federal and international law. The information contained on this document is the intellectual property of Andre L. Johnson, Architect and all rights thereto are Reserved. For exceptions, refer to the Owner-Architect Agreement.

CONSULTANT

RMF ENGINEERING, INC.
301 McCullough Drive, Suite 400
Charlotte, NC 28262

REGISTRATION

RMF ENGINEERING, INC. CERT. NO. C-1125 RALEIGH, N.C.

NORTH CAROLINA PROFESSIONAL SEAL 040879 ENGINEER DAVID P. FALCINELLI, JR.

Aug 5 2016

ISSUE

No.	Date	Description

SHEET INFO

ELECTRICAL SPECIAL SYSTEMS PLAN

E311

PROJECT NO: P1423.00
DATE: AUGUST 5, 2016
BID DOCUMENTS

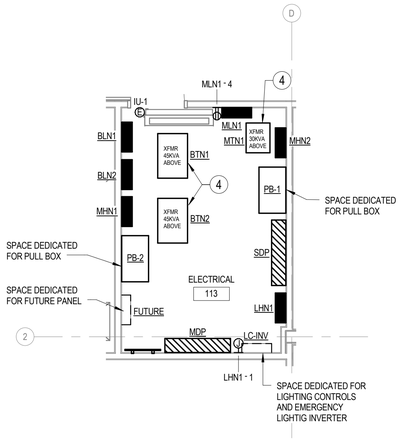

1 E101 E401 **01 ENLARGED POWER PLAN - ELECTRICAL 113**

SCALE: 1/4" = 1'-0"

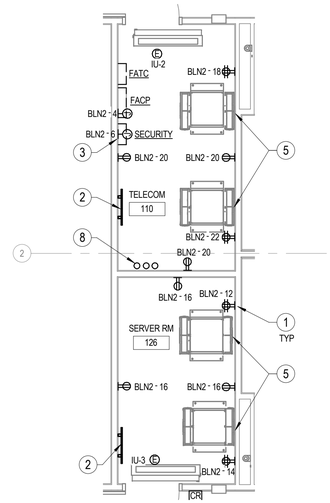

2 E101 E401 **01 ENLARGED POWER PLAN - TELECOM & SERVER**

SCALE: 1/4" = 1'-0"

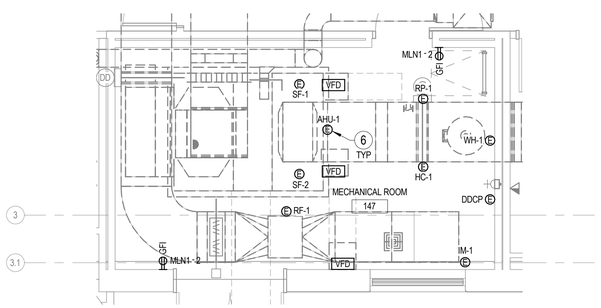

3 E101 E401 **01 ENLARGED POWER PLAN - MECHANICAL ROOM 147**

SCALE: 1/4" = 1'-0"

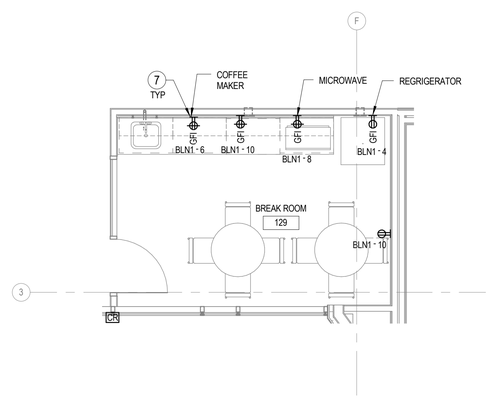

4 E101 E401 **01 ENLARGED POWER PLAN - BREAK ROOM 129**

SCALE: 1/4" = 1'-0"

GENERAL NOTES

1. MAINTAIN DEDICATED ELECTRICAL SPACE PER NEC 110.26. REFER TO SHEET E5.01.
2. PROVIDE GROUND BAR IN EACH TELECOMMUNICATIONS ROOM.

DRAWING NOTES

1. PROVIDE DOUBLE DUPLEX RECEPTACLES FOR TELECOMMUNICATION EQUIPMENT AT REAR ACCESS LOCATION OF RACKS. COORDINATE FINAL LOCATIONS WITH TELECOM CONTRACTOR PRIOR TO ROUGH-IN.
2. GROUND BAR, REFER TO DETAIL ON SHEET E5.02. COORDINATE FINAL LOCATION WITH SECURITY AND AV CONTRACTORS PRIOR TO INSTALLATION.
3. COORDINATE ELECTRICAL REQUIREMENTS AND FINAL LOCATION OF SECURITY PANEL WITH SECURITY CONTRACTOR PRIOR TO ROUGH-IN.
4. TRANSFORMER SHALL BE SUSPENDED FROM STRUCTURE ABOVE. REFER TO DETAIL ON SHEET E504.
5. TELECOMMUNICATIONS EQUIPMENT IS SHOWN FOR REFERENCE ONLY, AND IS PROVIDED BY THE OWNER UNDER A SEPARATE CONTRACT.
6. COORDIANTE AIR HANDLER POWER CONNECTIONS WITH FINAL MANUFACTURER SHOP DRAWINGS PRIOR TO ROUGH-IN. REFER TO EQUIPMENT SCHEDULE ON SHEET E702.
7. OUTLETS SHALL BE MOUNTED HORIZONTALLY WITH STAINLESS STEEL COVER PLATES WHERE LOCATED ABOVE COUNTERTOP.
8. TELECOM BACKBONE ENTRANCE CONDUITS, REFER TO ELECTRICAL SITE PLAN AND TELECOM RISER DIAGRAM FOR MORE INFORMATION.

GRAPHIC SCALE

4 2 0 4 8

SCALE: 1/4" = 1'-0"
UNIT OF MEASURE: FEET

CLIENT AND PROJECT

NORTH CAROLINA DEPARTMENT OF TRANSPORTATION

SCO ID NO.: 14-11006-01A

NEW DIVISION 8 OFFICE BUILDING

150 DOT DRIVE
CARTHAGE, NC 28327

DESIGNER

ANDRE JOHNSON ARCHITECT

PO BOX 14637
RALEIGH, NORTH CAROLINA 27620
TELEPHONE: 919.661.6935
MAIL: info@andrejohnsonarchitect.com

© 2015 Andre Johnson Architect, PLLC
Duplication or reproduction by any means without the express written consent of Andre L. Johnson, Architect is a violation of Federal and international law. The information contained on this document is the intellectual property of Andre L. Johnson, Architect and all rights thereto are Reserved. For exceptions, refer to the Owner-Architect Agreement.

CONSULTANT

RMF ENGINEERING, INC.
301 McCullough Drive, Suite 400
Charlotte, NC 28262

REGISTRATION

RMF ENGINEERING, INC. CERT. NO. C-1125 RALEIGH, N.C.

NORTH CAROLINA PROFESSIONAL SEAL 040879 ENGINEER DAVID P. FALCINELLI JR.

Aug 25 2016

ISSUE

No.	Date	Description

SHEET INFO

ELECTRICAL ENALRGED PLANS

E401

PROJECT NO: P1423.00
DATE: AUGUST 5, 2016
BID DOCUMENTS

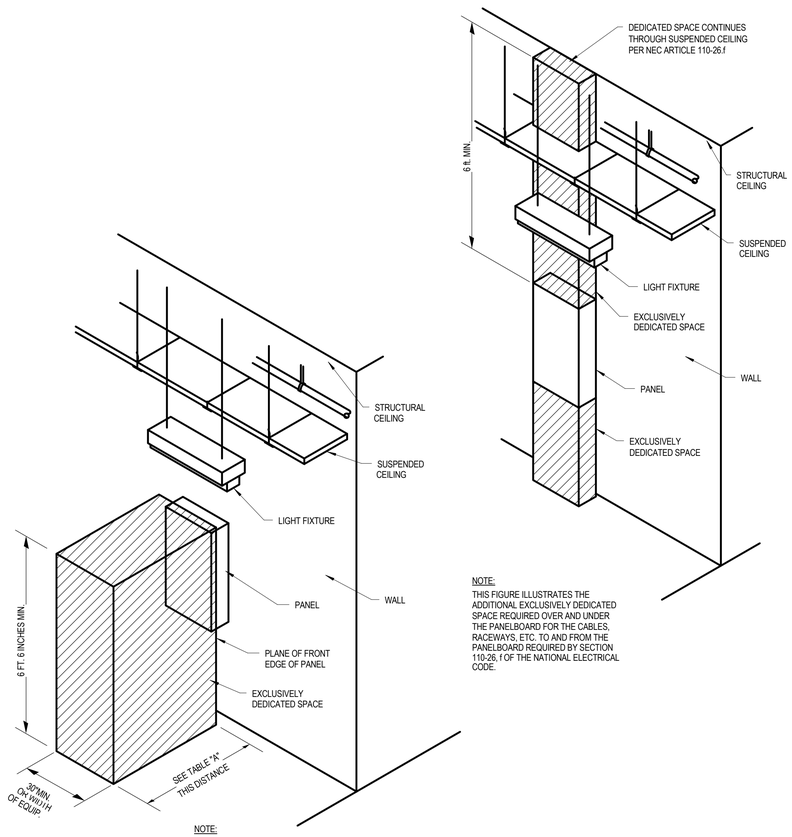

NOTE:
THIS FIGURE ILLUSTRATES THE ADDITIONAL EXCLUSIVELY DEDICATED SPACE REQUIRED OVER AND UNDER THE PANELBOARD FOR THE CABLES, RACEWAYS, ETC. TO AND FROM THE PANELBOARD REQUIRED BY SECTION 110-26, f OF THE NATIONAL ELECTRICAL CODE.

NOTE:
THIS FIGURE ILLUSTRATES THE WORKING SPACE IN FRONT OF THE PANELBOARD REQUIRED BY SECTION 110-26 OF THE NATIONAL ELECTRICAL CODE.

TABLE 110-26.(a) WORKING SPACES

VOLTAGE TO GROUND, NOMINAL	MINIMUM CLEAR DISTANCE (FEET)		
	CONDITION: 1	2	3
0-150	3	3	3
151-600	3	3 1/2	4

WHERE THE "CONDITIONS" ARE AS FOLLOWS:

1. EXPOSED LIVE PARTS ON ONE SIDE AND NO LIVE OR GROUNDED PARTS ON THE OTHER SIDE OF THE WORKING SPACE, OR EXPOSED LIVE PARTS ON BOTH SIDES EFFECTIVELY GUARDED BY SUITABLE WOOD OR OTHER INSULATING MATERIALS. INSULATED WIRE OR INSULATED BUSBARS OPERATING AT NOT OVER 300 VOLTS SHALL NOT BE CONSIDERED LIVE PARTS.
2. EXPOSED LIVE PARTS ON ONE SIDE AND GROUNDED PARTS ON THE OTHER SIDE. CONCRETE, BRICK OR TILE SHALL BE CONSIDERED AS GROUNDED.
3. EXPOSED LIVE PARTS ON BOTH SIDES OF THE WORK SPACE (NOT GUARDED AS PROVIDED IN CONDITION 1) WITH THE OPERATOR BETWEEN.

NOTE:
NO PIPING, DUCTS OR EQUIPMENT FOREIGN TO THE ELECTRICAL EQUIPMENT OR ARCHITECTURAL APPURTENANCES SHALL BE PERMITTED TO BE INSTALLED IN, ENTER OR PASS THROUGH THE DEDICATED SPACES SHOWN ABOVE.

WORKING SPACES FOR EQUIPMENT DETAIL

1 / E501 **DETAIL - WORKING SPACES FOR EQUIPMENT**
SCALE: 12" = 1'-0"

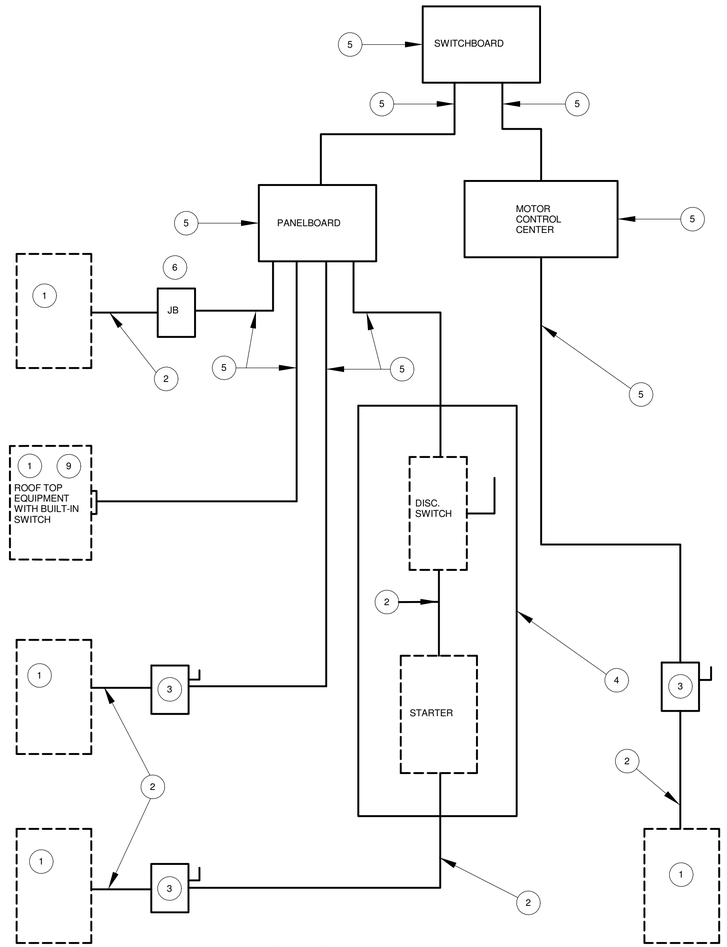

ELECTRICAL NOTES

1. EQUIPMENT PROVIDED BY TRADES OTHER THAN ELECTRICAL.
2. CONDUIT & WIRING BY MECHANICAL, PLUMBING CONTRACTOR OR OTHER TRADES OTHER THAN ELECTRICAL.
3. IF AN ADDITIONAL DISCONNECT IS REQUIRED BY NEC, IT SHALL BE PROVIDED AND INSTALLED BY THE CONTRACTOR PROVIDING THE EQUIPMENT.
4. A COMBINATION STARTER OR VFD MAY BE USED IN LIEU OF A SEPARATE DISCONNECT SWITCH AND STARTER. LOCATE ADJACENT TO EQUIPMENT. DISCONNECT SWITCH, VFD AND/OR STARTER SHALL BE PROVIDED BY THE CONTRACTOR PROVIDING THE EQUIPMENT.
5. SWITCHBOARD, PANELBOARD, FEEDER CIRCUIT WIRING AND CONDUIT PROVIDED BY ELECTRICAL TRADE AS SHOWN ON THE ELECTRICAL DRAWINGS. SEE PANELBOARD SCHEDULES FOR WIRE AND BREAKER SIZES.
6. JUNCTION BOX MAY BE SHOWN ON ELECTRICAL PLANS FOR SOME EQUIPMENT. IF NO STARTER OR DISCONNECT IS SUPPLIED, A JUNCTION BOX SHALL BE INSTALLED ADJACENT TO EQUIPMENT. THE ELECTRICAL CONTRACTOR SHALL PROVIDE LINE SIDE WIRING TO THE JUNCTION BOX. LOAD SIDE WIRING WILL BE PROVIDED BY MECHANICAL, PLUMBING CONTRACTOR OR OTHER TRADES OTHER THAN ELECTRICAL.
7. FOR PROJECTS UTILIZING AN MCC, THE STARTER, CB, AND/OR THE VFD LOCATED IN THE MCC SHALL BE PROVIDED BY THE ELECTRICAL CONTRACTOR.
8. IN ALL CASES THE CONTRACTOR SUPPLYING THE EQUIPMENT SHALL MAKE THE FINAL ELECTRICAL TERMINATIONS, START UP, AND TEST THE EQUIPMENT.
9. IF THE ROOF TOP EQUIPMENT IS NOT PROVIDED WITH BUILT IN DISCONNECT SWITCH, THE ELECTRICAL CONTRACTOR SHALL PROVIDE A DISCONNECT SWITCH.

3 / E501 **DETAIL - DIV OF RESPONSIBILITIES**
SCALE: 12" = 1'-0"

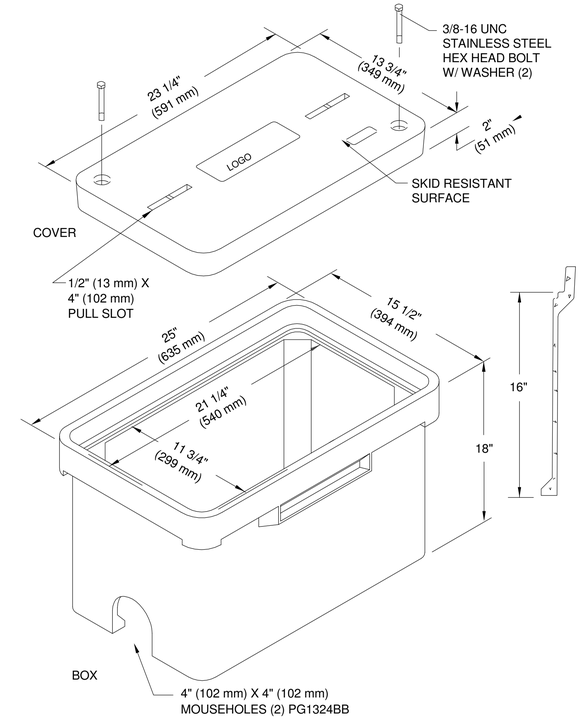

PRECAST POLYMER HANDHOLE JUNCTION BOX

NO SCALE

4 / E501 **DETAIL - PRECAST POLYMER HANDHOLE**
SCALE: 12" = 1'-0"

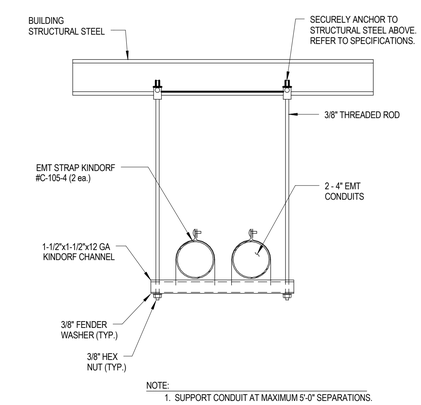

NOTE:
1. SUPPORT CONDUIT AT MAXIMUM 5'-0" SEPARATIONS.

2 / E501 **DETAIL - CONDUIT TRAPEZE**
SCALE: 12" = 1'-0"

CLIENT AND PROJECT

NORTH CAROLINA DEPARTMENT OF TRANSPORTATION

SCO ID NO.: 14-11006-01A

NEW DIVISION 8 OFFICE BUILDING
150 DOT DRIVE
CARTHAGE, NC 28327

DESIGNER

ANDRE JOHNSON ARCHITECT
PO BOX 14637
RALEIGH, NORTH CAROLINA 27620
TELEPHONE: 919.661.6935
MAIL: info@andrejohnsonarchitect.com

© 2015 Andre Johnson Architect, PLLC
Duplication or reproduction by any means without the express written consent of Andre L. Johnson, Architect is a violation of Federal and international law. The information contained on this document is the intellectual property of Andre L. Johnson, Architect and all rights thereto are Reserved. For exceptions, refer to the Owner-Architect Agreement.

CONSULTANT

RMF ENGINEERING, INC.
301 McCullough Drive, Suite 400
Charlotte, NC 28262

REGISTRATION

RMF ENGINEERING, INC. P.A. CERT. NO. C-1125 RALEIGH, N.C.

NORTH CAROLINA PROFESSIONAL SEAL 040879 ENGINEER DAVID P. FALCINELLI, JR.

Aug 5 2016

ISSUE

No.	Date	Description

SHEET INFO

ELECTRICAL DETAILS

E501

PROJECT NO: P1423.00
DATE: AUGUST 5, 2016
BID DOCUMENTS

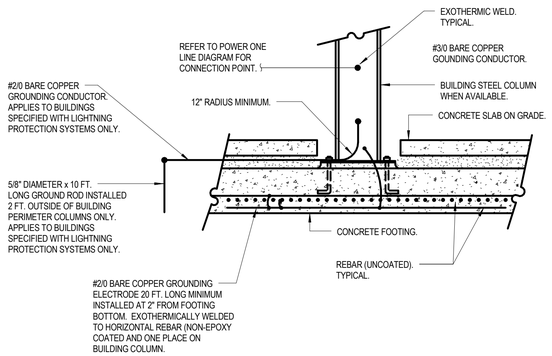

3 / E502 **DETAIL - CONCRETE ENCASED ELECTRODE**
SCALE: 12" = 1'-0"

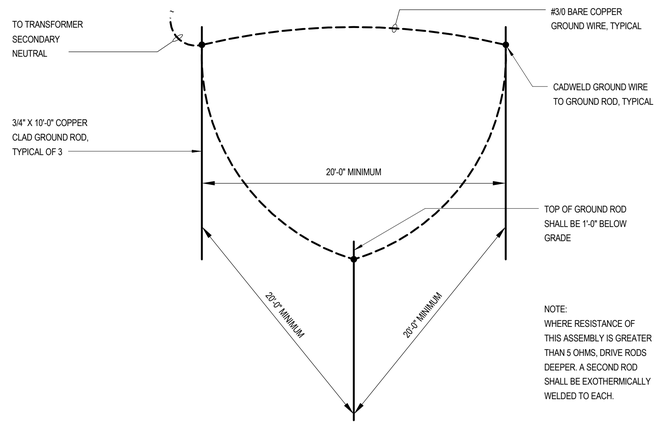

4 / E502 **DETAIL - GROUND GRID**
SCALE: 12" = 1'-0"

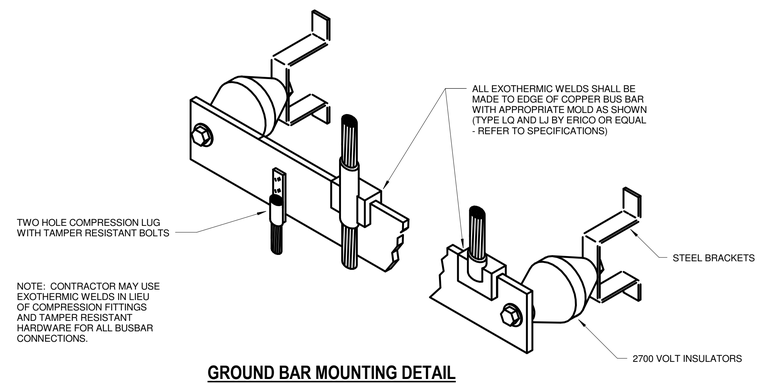

NOTE: CONTRACTOR MAY USE EXOTHERMIC WELDS IN LIEU OF COMPRESSION FITTINGS AND TAMPER RESISTANT HARDWARE FOR ALL BUSBAR CONNECTIONS.

GROUND BAR MOUNTING DETAIL

NOTES:

1. TRANSFORMER BONDING STRAP. IF PROVIDED BY THE TRANSFORMER MANUFACTURER THIS STRAP SHOULD BE THE SAME SIZE AS THE MAIN BONDING JUMPER. (PER 250-66)
2. USE A BONDING BUSHING AND JUMPER AT THE CONDUIT TERMINATION. JUMPER SHOULD BE THE SAME SIZE AS THE GROUNDING ELECTRODE CONDUCTOR CONTAINED IN THE CONDUIT.
3. USE A BONDING CLAMP AT THE TERMINATION OF THE GROUNDING ELECTRODE CONDUCTOR TO THE ELECTRODE.

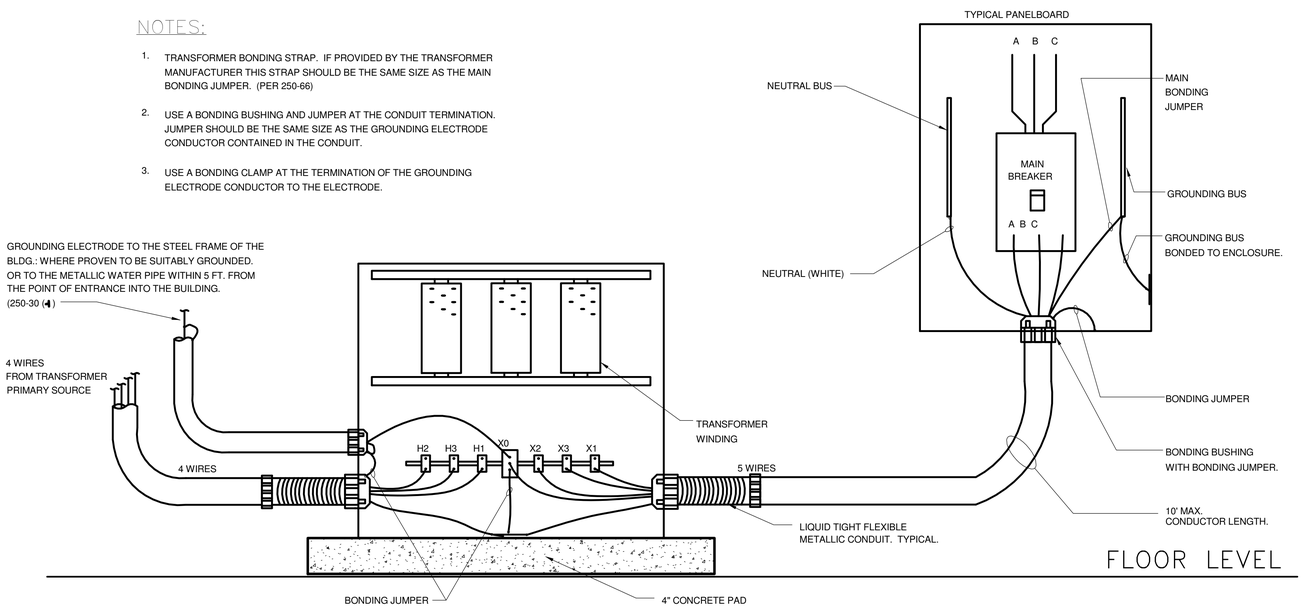

1 / E502 **DETAIL - TYPICAL DRY TYPE TRANSFORMER**
SCALE: 12" = 1'-0"

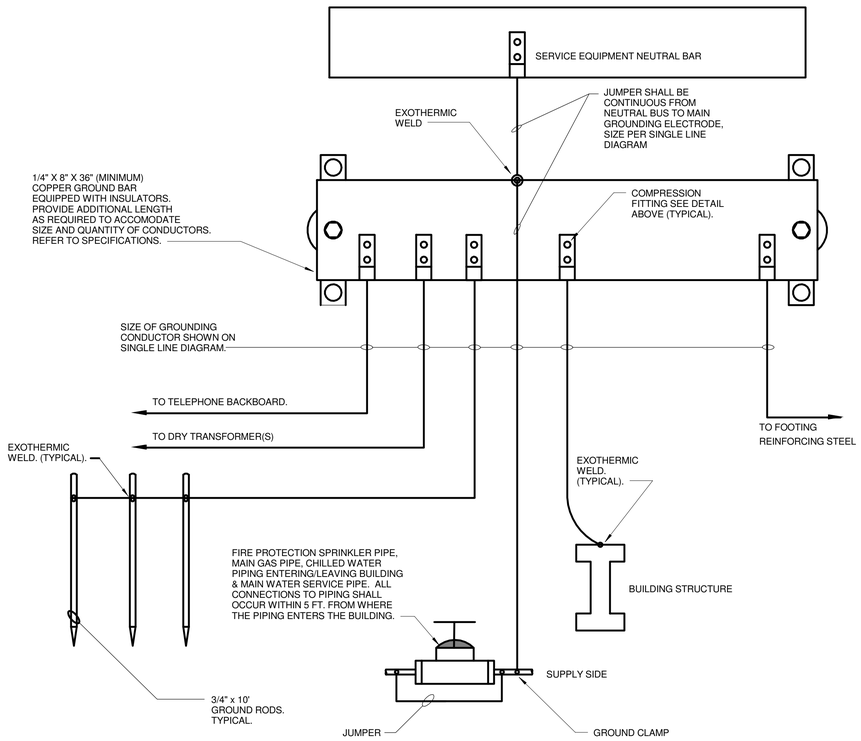

2 / E502 **DETAIL - GROUNDING BAR**
SCALE: 12" = 1'-0"

CLIENT AND PROJECT

NORTH CAROLINA DEPARTMENT OF TRANSPORTATION

SCO ID NO.: 14-11006-01A

NEW DIVISION 8 OFFICE BUILDING
150 DOT DRIVE
CARTHAGE, NC 28327

DESIGNER

ANDRE JOHNSON ARCHITECT
PO BOX 14637
RALEIGH, NORTH CAROLINA 27620
TELEPHONE: 919.661.6935
MAIL: info@andrejohnsonarchitect.com

© 2015 Andre Johnson Architect, PLLC
Duplication or reproduction by any means without the express written consent of Andre L. Johnson, Architect is a violation of Federal and international law. The information contained on this document is the intellectual property of Andre L. Johnson, Architect and all rights thereto are Reserved. For exceptions, refer to the Owner-Architect Agreement.

CONSULTANT

RMF ENGINEERING, INC.
301 McCullough Drive, Suite 400
Charlotte, NC 28262

REGISTRATION

RMF ENGINEERING, INC. PA CERT. NO. C-1125 RALEIGH, NC

NORTH CAROLINA PROFESSIONAL SEAL 040879 ENGINEER DAVID P. FALCINELLI, JR.

Aug 5 2016

ISSUE

No.	Date	Description

SHEET INFO

ELECTRICAL DETAILS

E502

PROJECT NO: P1423.00
DATE: AUGUST 5, 2016
BID DOCUMENTS

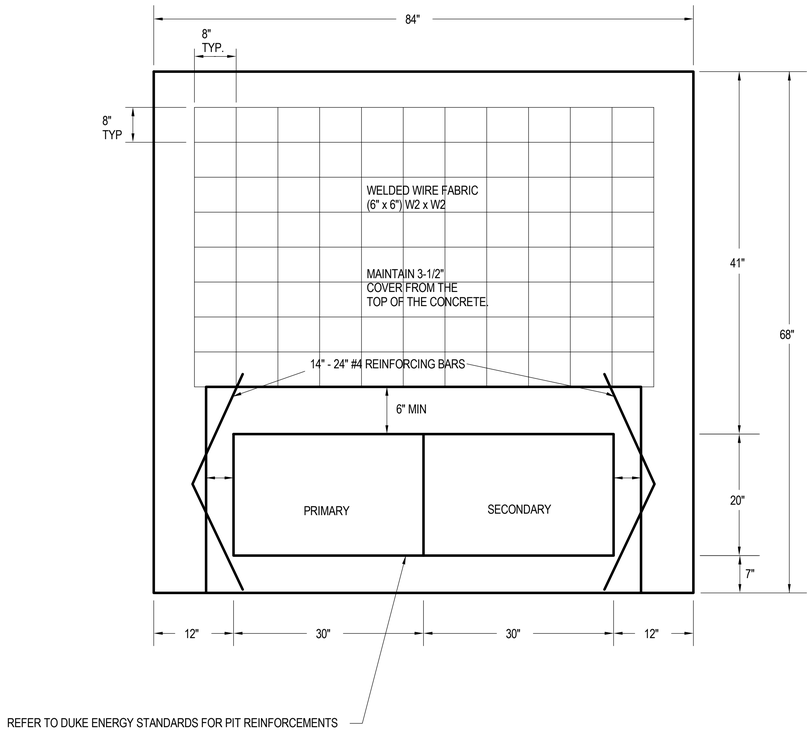

GENERAL NOTES:

1. THESE DETAILS REPRESENT TWO VIEWS OF DUKE ENERGY. TRANSFORMER BASE AND IS TO BE USED FOR REFERENCE. THE CONTRACTOR SHALL CONTACT DUKE ENERGY AND OBTAIN THE LATEST REQUIREMENTS AND/OR DRAWINGS AND INCLUDE THE COST OF CONSTRUCTION IN THE BID.

2. SLOPE SLAB-ON-GRADE 1/8" PER FOOT MINIMUM TOWARDS OPENING.

3. ALL ELBOW TURNUPS AT PAD AND ALL VERITCAL CONDUITS FROM ELBOW TO TOP OF PAD OR THROUGH THE PAD SHALL BE RIDGID STEEL CONDUIT WITH GROUNDING BUSHINGS INSTALLED AT CONDUIT OPEN ENDS.

4. CUSTOMER SHALL CONTACT DUKE ENERGY TO INSPECT PAD FORMS AND DIMENSIONS PRIOR TO CONCRETE BEING POURED.

5. CUSTOMER SHALL SUPPLY THE CONCRETE MIX, WELDED WIRE FABRIC, #4 REINFORCING BARS, AND SHALL POUR THE PIT PAD.

6. THE DIMENSIONS SHALL BE IN ACCORDANCE WITH THE SPECIFICATIONS BASED ON THE TRANSFORMER KVA SIZE. THE THICKNESS OF ALL WALLS ON THE PIT PAD SHALL BE A MINIMUM OF 6" THICK. THE TRANSFORMER KVA SIZE IS TO BE SPECIFIED BY DUKE ENERGY.

7. REFER TO THE DUKE ENERGY PADMOUNT BUILDING CLEARANCE STANDARD FOR THE MINIMUM ALLOWABLE DISTANCE BETWEEN TRANSFORMER PADS AND BUILDINGS, BUILDING OPENINGS AND EQUIPMENT. THERE SHALL BE A MINIMUM CLEARANCE OF 10' FROM THE FRONT OF THE CONCRETE PAD TO ANY WALLS, MACHINERY, OR OTHER OBSTACLES. IF THERE ARE MULTIPLE TRANSFORMERS OR SECONDARY BUS ENCLOSURES INVOLVED IN THE INSTALLATION, THERE SHALL BE A MINIMUM CLEARANCE OF 3 FEET BETWEEN ALL PADMOUNT EQUIPMENT.

8. CUSTOMER SHALL INSTALL THE CONDUIT FOR THE PRIMARY CONDUCTORS AS CLOSE TO THE CENTER OF THE PRIMARY AREA AS PRACTICAL. THE PRIMARY CONDUITS AND THE CUSTOMER'S SECONDARY CONDUITS SHALL BE CUT TO MEET THE DIMENSIONS AS SHOWN.

9. CUSTOMER SHALL INFORM DUKE ENERGY OF THE NUMBER, SIZE, AND TYPE OF SECONDARY CONDUCTORS THAT WILL BE INSTALLED.

10. CUSTOMER MUST BE SPECIFIC REGARDING 4-WIRE AND 3 WIRE DELIVERIES. SPECIAL METERING AND GROUNDING CONSIDERATIONS MAY NEED TO BE CONSIDERED FOR EACH OF THESE DELIVERIES. FOR 3-WIRE DELIVERIES, A SINGLE GROUNDING CONDUCTOR (MAXIMUM SIZE 1/0) FROM THE CUSTOMER SHALL BE CONNECTED TO THE COPPER GROUND RING IN THE TRANSFORMER COMPARTMENT, AND THE GROUND STRAP MUST BE COMPLETELY DISCONNECTED FROM THE X0 BUSHING.

11. IT IS THE RESPONSIBILITY OF THE CUSTOMER TO PROVIDE ROOM FOR EXCESS SECONDARY CABLES WHEN CONDUCTORS ARE IN PARALLEL. ALL PARALLEL CONDUCTORS SHALL BE GROUPED AND MARKED BY THE ELECTRICIAN. THERE MUST BE NO MORE THAN 1.5 FEET DIFFERENCE BETWEEN THE SHORTEST AND THE LONGEST OF ANY PARALLEL CABLES ON ANY ONE PHASE.

12. PAD TO BE A MINIMUM OF 6" THICK.

13. SOIL UNDERNEATH PADS SHALL BE FREE OF ROOTS, TOPSOIL AND OTHER ORGANIC MATERIALS AND SHALL BE THOROUGHLY COMPACTED. EXERCISE CARE IN BACKFILLING AND GRADING AROUND PAD.

14. CONCRETE MIX SHALL MEET THE FOLLOWING:
    MINIMUM 28 DAY COMPRESSIVE STRENGTH OF 3,000 PSI.

    MAXIMUM WATER/CEMENT RATION OF 0.50.

    MAXIMUM SLUMP OF 4".

    AIR-ENTRAINMENT CONTENT BETWEEN 4 AND 8 PERCENT.

15. CONCRETE SHALL BE AFFORDED ADEQUATE CURE FOR A MINIMUM OF:
    FIVE (5) DAYS IF THE AMBIENT TEMPERATURE IS OVER 70°F

    SEVEN (7) DAYS IF THE AMBIENT AVERAGE TEMPERATURE IS BELOW 70°F.

16. ADEQUATE CURE CAN BE PERFORMED BY WATERPROOF MEMBRANES, SPRINKLING OR SOAKING, OR CURING COMPOUNDS.

17. PAD SHALL BE SUPPORTED ON A SUB-BASE OF SAND, GRAVEL, OR CRUSHED STONE. THE GRANULAR SUB-BASE SHALL BE A MINIMUM OF FOUR (4) INCHES THICK AND SHALL BE COMPACTED WITH VIBRATORY COMPACTOR.

18. DAMPEN THE SUB-BASE PRIOR TO CONCRETE PLACEMENT. AT THE TIME OF PLACEMENT, THE SUB-BASE SHALL NOT CONTAIN STANDING WATER.

19. THE TOP OF THE CONCRETE PAD SHALL BE STEEL TROWELED AND COMPLETELY SMOOTH TO PREVENT "GAPS" BETWEEN THE TRANSFORMER AND THE SURFACE OF THE CONCRETE PAD.

20. CONDUITS SHALL BE SCHEDULE 40 AND HAVE AN ELBOW RADIUS OF 36".

21. ALL CONDUITS SHALL BE INSTALLED SO THE BELLED END IS "UP" IN THE TRANSFORMER COMPARTMENT TO MINIMIZE DAMAGE TO THE CABLES DURING INSTALLATION.

22. SERVICE CONDUIT SHALL BE LOCATED IN THE EXTREME RIGHT SIDE OF THE SECONDARY COMPARTMENT

23. FIRE ANT CONTROL SHALL BE USED UNDER ENTIRE PAD INCLUDING PAD OPENINGS.

24. OTHER UTILITIES ARE NOT TO BE INSTALLED UNDER TRANSFORMER PAD.

1 / E503

TYIPCAL TRANSFORMER PAD DETAIL

SCALE: 12" = 1'-0"

CLIENT AND PROJECT

NORTH CAROLINA DEPARTMENT OF TRANSPORTATION

SCO ID NO.: 14-11006-01A

NEW DIVISION 8 OFFICE BUILDING

150 DOT DRIVE
CARTHAGE, NC 28327

DESIGNER

ANDRE JOHNSON ARCHITECT

PO BOX 14637
RALEIGH, NORTH CAROLINA 27620
TELEPHONE: 919.661.6935
MAIL: info@andrejohnsonarchitect.com

© 2015 Andre Johnson Architect, PLLC
Duplication or reproduction by any means without the express written consent of Andre L. Johnson, Architect is a violation of Federal and international law. The information contained on this document is the intellectual property of Andre L. Johnson, Architect and all rights thereto are Reserved. For exceptions, refer to the Owner-Architect Agreement.

CONSULTANT

RMF ENGINEERING, INC.
301 McCullough Drive, Suite 400
Charlotte, NC 28262

REGISTRATION

RMF ENGINEERING, INC. CERT. NO. C-1125 RALEIGH, NC

NORTH CAROLINA PROFESSIONAL SEAL 040879 ENGINEER DAVID P. FALCINELLI, JR.

Aug 5 2016

ISSUE

No.	Date	Description

SHEET INFO

ELECTRICAL DETAILS

E503

PROJECT NO: P1423.00
DATE: AUGUST 5, 2016
BID DOCUMENTS

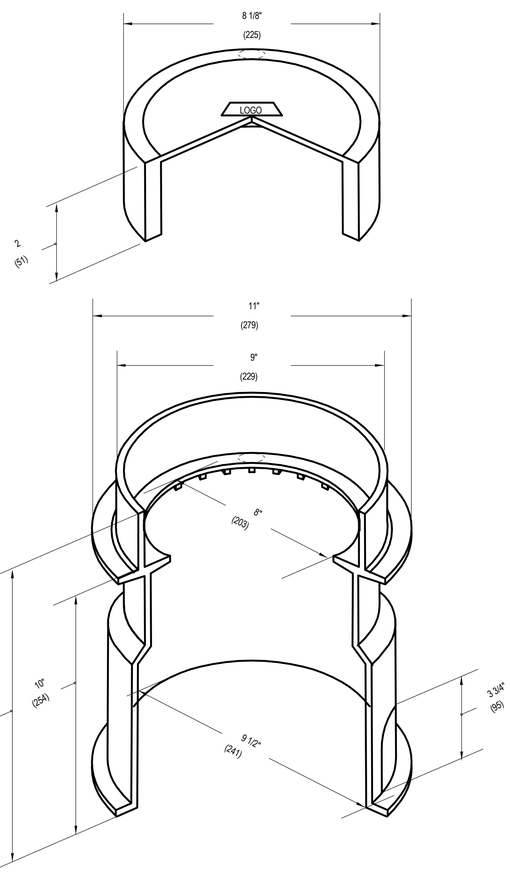

CHRISTY ORDERING CODE	ITEM	DESCRIPTION	APROX. SHIPPING WEIGHT
8FLBOX	BOX	8FL BOX (9" DIA. I.D. 12" HIGH) BOLT DOWN LID-64 PER PALLET	6
F8C	LID	CAST IRON	7

NOTE: ADS PLASTIC EXTENSIONS AVAILABLE IN 6", 8", 12" AND 18" SIZES.
REFER TO SPECIFICATIONS FOR APPROVED EQUAL MANUFACTURERS.

2 E504 **DETAIL - INSPECTION WELL**
SCALE: 12" = 1'-0"

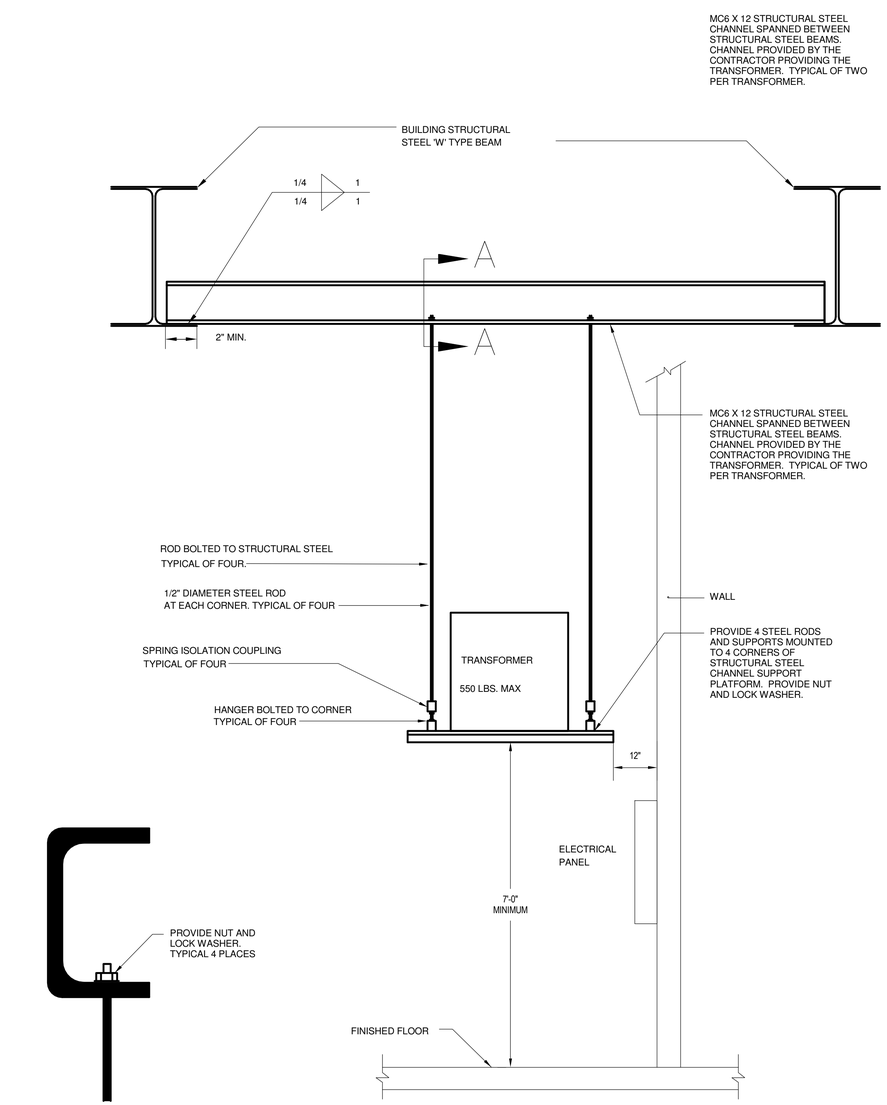

1 E504 **DETAIL - SUSPENDED TRANSFORMER**
SCALE: 12" = 1'-0"

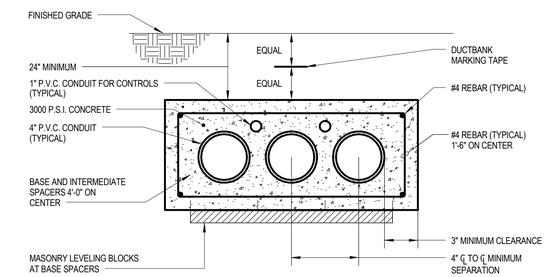

NOTES:
1. REBAR REQUIRED UNDER ROADWAYS ONLY.
2. COORDINATE FINAL INSTALLATION DEPTH WITH CIVIL DRAWINGS.

3 E504 **3 WAY DUCT BANK - TELECOM ENTRANCE**
SCALE: 12" = 1'-0"

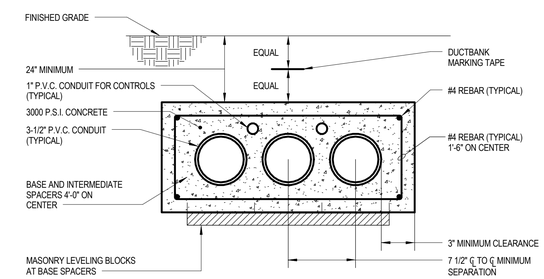

NOTES:
1. REBAR REQUIRED UNDER ROADWAYS ONLY.
2. COORDINATE FINAL INSTALLATION DEPTH WITH CIVIL DRAWINGS.

4 E504 **3 WAY DUCT BANK FOR FUTURE**
SCALE: 12" = 1'-0"

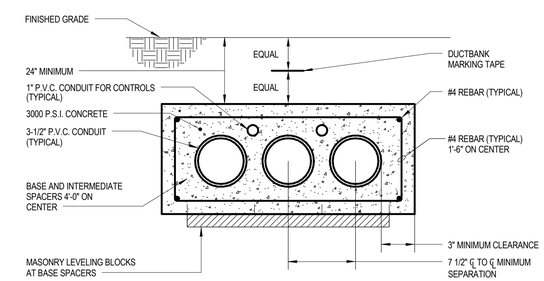

NOTES:
1. REBAR REQUIRED UNDER ROADWAYS ONLY.
2. COORDINATE FINAL INSTALLATION DEPTH WITH CIVIL DRAWINGS.

5 E504 **3 WAY DUCT BANK FOR SERVICE**
SCALE: 12" = 1'-0"

CLIENT AND PROJECT

NORTH CAROLINA DEPARTMENT OF TRANSPORTATION

SCO ID NO.: 14-11006-01A

NEW DIVISION 8 OFFICE BUILDING

150 DOT DRIVE
CARTHAGE, NC 28327

DESIGNER

ANDRE JOHNSON ARCHITECT
PO BOX 14637
RALEIGH, NORTH CAROLINA 27620
TELEPHONE: 919.661.6935
MAIL: info@andrejohnsonarchitect.com

© 2015 Andre Johnson Architect, PLLC
Duplication or reproduction by any means without the express written consent of Andre L. Johnson, Architect is a violation of Federal and international law. The information contained on this document is the intellectual property of Andre L. Johnson, Architect and all rights thereto are Reserved. For exceptions, refer to the Owner-Architect Agreement.

CONSULTANT

RMF ENGINEERING, INC.
301 McCullough Drive, Suite 400
Charlotte, NC 28262

REGISTRATION

RMF ENGINEERING, INC. P.A. CERT. NO. C-1125 RALEIGH, N.C.

NORTH CAROLINA PROFESSIONAL SEAL 040879 ENGINEER DAVID P. FALCONELLI, JR.

Aug 5 2016

ISSUE

No.	Date	Description

SHEET INFO

ELECTRICAL DETAILS

E504

PROJECT NO: P1423.00
DATE: AUGUST 5, 2016
BID DOCUMENTS

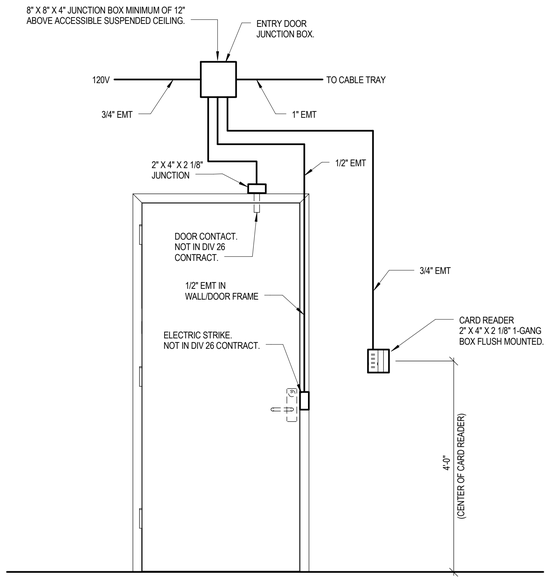

2 E505 **DETAIL - CARD ACCESS SINGLE DOOR**

SCALE: 12" = 1'-0"

CLIENT AND PROJECT

NORTH CAROLINA DEPARTMENT OF TRANSPORTATION

SCO ID NO.: 14-11006-01A

NEW DIVISION 8 OFFICE BUILDING

150 DOT DRIVE
CARTHAGE, NC 28327

DESIGNER

ANDRE JOHNSON ARCHITECT

PO BOX 14637
RALEIGH, NORTH CAROLINA 27620
TELEPHONE: 919.661.6935
MAIL: info@andrejohnsonarchitect.com

© 2015 Andre Johnson Architect, PLLC
Duplication or reproduction by any means without the express written consent of Andre L. Johnson, Architect is a violation of Federal and international law. The information contained on this document is the intellectual property of Andre L. Johnson, Architect and all rights thereto are Reserved. For exceptions, refer to the Owner-Architect Agreement.

CONSULTANT

RMF ENGINEERING, INC.
301 McCullough Drive, Suite 400
Charlotte, NC 28262

REGISTRATION

RMF ENGINEERING, INC. P.A. CERT. NO. C-1125 ENGINEERING RALEIGH, N.C.

NORTH CAROLINA PROFESSIONAL SEAL 040879 ENGINEER DAVID P. FALCINELLI, JR.

Aug 5 2016

ISSUE

No.	Date	Description

SHEET INFO

ELECTRICAL DETAILS

E505

PROJECT NO: P1423.00
DATE: AUGUST 5, 2016
BID DOCUMENTS

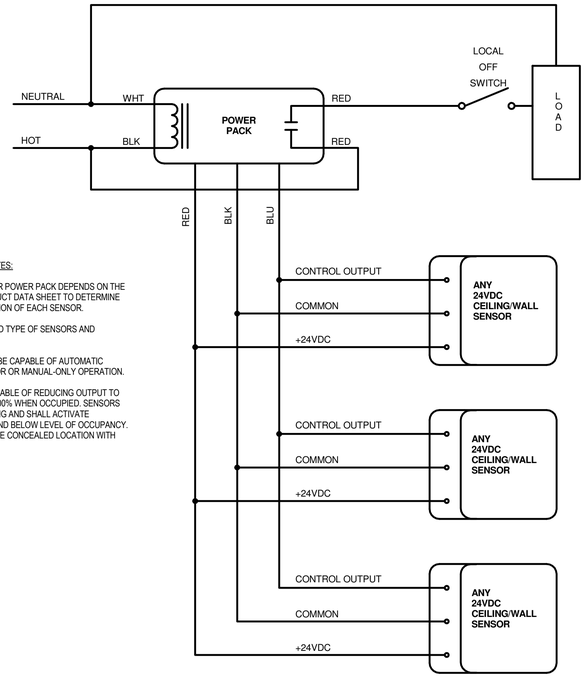

GENERAL OCCUPANCY SENSOR NOTES:

1. MAXIMUM NUMBER OF SENSORS PER POWER PACK DEPENDS ON THE MODEL OF SENSOR. SEE THE PRODUCT DATA SHEET TO DETERMINE THE SPECIFIC CURRENT CONSUMPTION OF EACH SENSOR.
2. REFER TO PLANS FOR QUANTITY AND TYPE OF SENSORS AND SWITCHES/DIMMERS.
3. INTELLIGENT POWER PACKS SHALL BE CAPABLE OF AUTOMATIC ACTIVATION VIA OCCUPANCY SENSOR OR MANUAL-ONLY OPERATION.
4. STAIRWELL SENSORS SHALL BE CAPABLE OF REDUCING OUTPUT TO 20% WHEN STAIR IS UNOCCUPIED. 100% WHEN OCCUPIED. SENSORS SHALL BE LOCATED AT EACH LANDING AND SHALL ACTIVATE LUMINAIRES ON LANDINGS ABOVE AND BELOW LEVEL OF OCCUPANCY. LOCATE POWER PACK IN ACCESSIBLE CONCEALED LOCATION WITH STAIRWELLS.

3 E506 **DETAIL - OCCUPANCY SENSOR MULTIPLE**
SCALE: 12" = 1'-0"

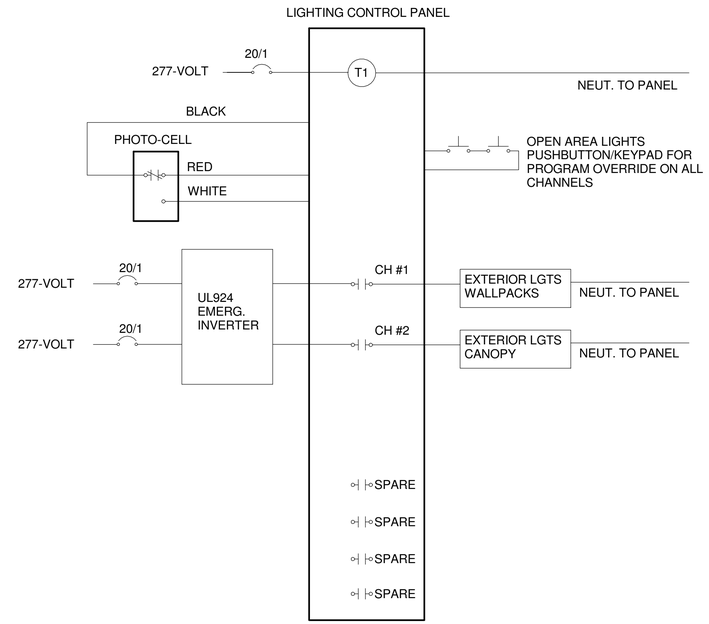

EXTERIOR LIGHT CONTROL

1 E506 **DETAIL - LIGHTING CONTACTOR DIAGRAM - NORMAL**
SCALE: 12" = 1'-0"

DIAGRAM NOTES:

1. REFER TO PLANS FOR FIXTURE QUANTITIES.
2. LIGHTING CONTROL PANEL SHALL CONTROL EXTERIOR LIGHTS

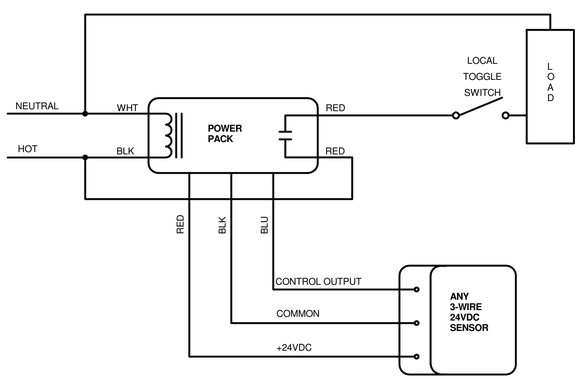

4 E506 **DETAIL - OCCUPANCY SENSOR STANDARD 3-WIRE**
SCALE: 12" = 1'-0"

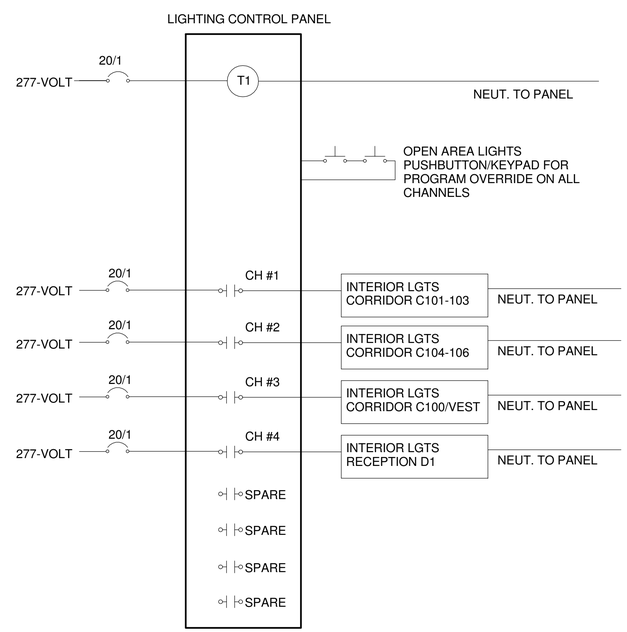

LIGHT CONTROL OPEN AREA W/ MANUAL USER OVER-RIDE

2 E506 **DETAIL - LIGHTING CONTACTOR DIAGRAM OPEN AREA W/ MANUAL USER OVER-RIDE**
SCALE: 12" = 1'-0"

DIAGRAM NOTES:

1. REFER TO PLANS FOR FIXTURE QUANTITIES.
2. TIME SWITCH SHALL CONTROL INTERIOR LIGHTS.
3. PROVIDE USER SELECTABLE OVERRIDE WITH WITH WARNING BLINK BEFORE TURN OFF.

CLIENT AND PROJECT

NORTH CAROLINA DEPARTMENT OF TRANSPORTATION

SCO ID NO.: 14-11006-01A

NEW DIVISION 8 OFFICE BUILDING

150 DOT DRIVE
CARTHAGE, NC 28327

DESIGNER

ANDRE JOHNSON ARCHITECT
PO BOX 14637
RALEIGH, NORTH CAROLINA 27620
TELEPHONE: 919.661.6935
MAIL: info@andrejohnsonarchitect.com

© 2015 Andre Johnson Architect, PLLC
Duplication or reproduction by any means without the express written consent of Andre L. Johnson, Architect is a violation of Federal and international law. The information contained on this document is the intellectual property of Andre L. Johnson, Architect and all rights thereto are Reserved. For exceptions, refer to the Owner-Architect Agreement.

CONSULTANT

RMF ENGINEERING, INC.
301 McCullough Drive, Suite 400
Charlotte, NC 28262

REGISTRATION

RMF ENGINEERING, INC. CERT. NO. C-1125 RALEIGH, N.C.

NORTH CAROLINA PROFESSIONAL SEAL 040879 ENGINEER DAVID P. FALCINELLI, JR.

Aug 5 2016

ISSUE

No.	Date	Description

SHEET INFO

ELECTRICAL DETAILS

E506

PROJECT NO: P1423.00
DATE: AUGUST 5, 2016
BID DOCUMENTS

LIGHTING CONTROL SEQUENCE OF OPERATIONS

LEGEND:

RC - ROOM CONTROLLER
PP - POWER PACK
LCP - LIGHTING CONTROL PANEL
TC - ASTRONOMICAL TIMECLOCK

DT - DUAL TECH OCCUPANCY SENSOR
OS - IR OCCUPANCY SENSOR
IOS - INTEGRATED OCCUPANCY SENSOR
DL - AMBIENT LIGHT DAYLIGHT SENSOR
PC - PHOTOCELL

GS - GRAPHICAL USER INTERFACE
KP - KEYPAD (SCENE SELECTION, RAISE/LOWER)
LV - LOW VOLTAGE SWITCH (ON/OFF, RAISE/LOWER)
UO - MANUAL USER OVER-RIDE

PT - PILOT TOGGLE SWITCH
S - STANDARD SWITCH
SD - SWITCH WITH DIMMIMG
T - TIMER SWITCH

SEQUENCE TYPE	SPACE DESCRIPTION	COMPONENTS			EM PWR	UL924 REQ.	STDBY PWR	DIMMING	SEQUENCE DESCRIPTION
		CONTROL	SWITCH	SENSOR					
1	ELECTRICAL ROOM	LINE VOLTAGE	PT	--	YES	--	--	NO	MANUAL, BATTERY PACK
2	TELECOM/SERVER	LINE VOLTAGE	PT	--	YES	--	--	NO	MANUAL, BATTERY PACK
3	MECHANICAL ROOM	LINE VOLTAGE	PT	--	YES	--	--	NO	MANUAL, BATTERY PACK
4	WORK/FILE ROOM	PP	S	DT	YES	--	--	NO	VACANCY SENSOR OPERATION; MANUAL ON/OFF OVER-RIDE; 3-WAY SWITCH, BATTERY PACK
5	COPY ROOM	PP	S	DT	NO	--	--	NO	VACANCY SENSOR OPERATION; MANUAL ON/OFF OVER-RIDE; 3-WAY SWITCH
6	JANITOR/ HK	LINE VOLTAGE	WALL OS	WALL OS	NO	--	--	NO	WALL SENSOR W/ MANUAL ON/OFF OVER-RIDE; STANDARD DELAY SETTING
7	TOILET	PP	--	DT	YES	--	--	NO	OCC SENSOR OPERATION WITH MAXIMUM DELAY SETTING; BATTERY PACK
8	CORRIDOR	LCP	UO	--	YES	--	--	NO	TIMECLOCK WITH MANUAL USER OVER-RIDE, BATTERY PACK
9	WAITING/RECEPTION	LCP	UO	--	NO	--	--	NO	TIMECLOCK WITH MANUAL OVER-RIDE
10	PERSONAL OFFICE	PP	S	DT	NO	--	--	NO	ON/OFF; VACANCY SENSOR OPERATION; MANUAL ON/OFF OVER-RIDE
11	SHARED OFFICE	PP	S	DT	NO	--	--	NO	ON/OFF; VACANCY SENSOR OPERATION; MANUAL ON/OFF OVER-RIDE
12	SMALL CONFERENCE	PP	S	DT	NO	--	--	NO	ON/OFF; VACANCY SENSOR OPERATION; MANUAL ON/OFF OVER-RIDE
13	LARGE CONFERENCE	PP	TD (2)	DT	YES	--	--	YES	ON/OFF; RAISE/LOWER; VACANCY SENSOR OPERATION; MANUAL ON/OFF OVER-RIDE; BATTERY PACK
14	BREAK ROOM	PP	S	DT	NO	--	--	NO	ON/OFF; VACANCY SENSOR OPERATION; MANUAL ON/OFF OVER-RIDE. UNDERCABINET LIGHTING CONNECTED VIA OCCUPANCY SENSOR, WITH LOCAL ON/OFF CONTROL.
15	EXTERIOR, PARKING LOT	LCP	TC	PC	NO	--	--	NO	TIMECLOCK WITH MANUAL USER OVER-RIDE. CONTROL. BUILDING ROOF TOP PHOTOCELL
16	EXTERIOR, ENTRY CANOPY	LCP	TC	PC	YES	--	--	NO	TIMECLOCK WITH MANUAL USER OVER-RIDE. CONTROL. BUILDING ROOF TOP PHOTOCELL; BATTERY PACK
17	EXTERIOR, WALLPACKS	LCP	TC	PC	YES	--	--	NO	TIMECLOCK WITH MANUAL USER OVER-RIDE. CONTROL. BUILDING ROOF TOP PHOTOCELL; BATTERY PACK
18									
19									
20									
21									
22									
23									
24									

5 E507 **LIGHTING CONTROL SEQUENCE OF OPERATIONS**
SCALE: 12" = 1'-0"

GENERAL NOTES

1. EMERGENCY LIGHTING SHALL BE CONNECTED AHEAD OF SWITCHING OR BE PROVIDED W/ UNSWITCHED VOLTAGE SENSING INPUT TO ENSURE EMERGENCY LIGHTING WILL REMAIN FUNCTIONAL INDEPENDENT OF SWITCHING.

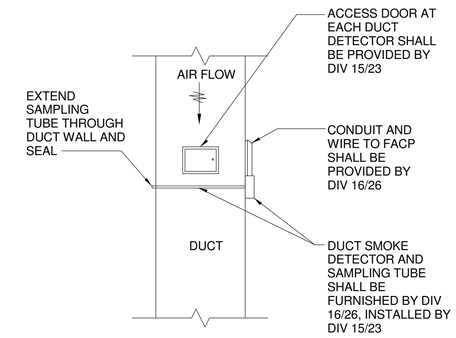

1 E507 **DUCT DETECTOR MOUNTING**
SCALE: 12" = 1'-0"

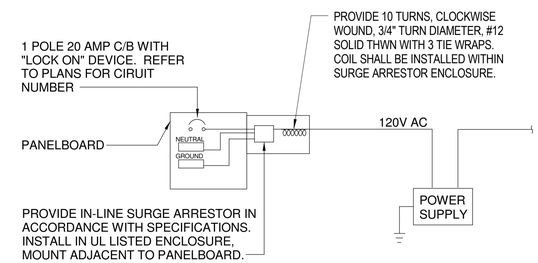

2 E507 **FACP 120VAC WIRING DIAGRAM**
SCALE: 12" = 1'-0"

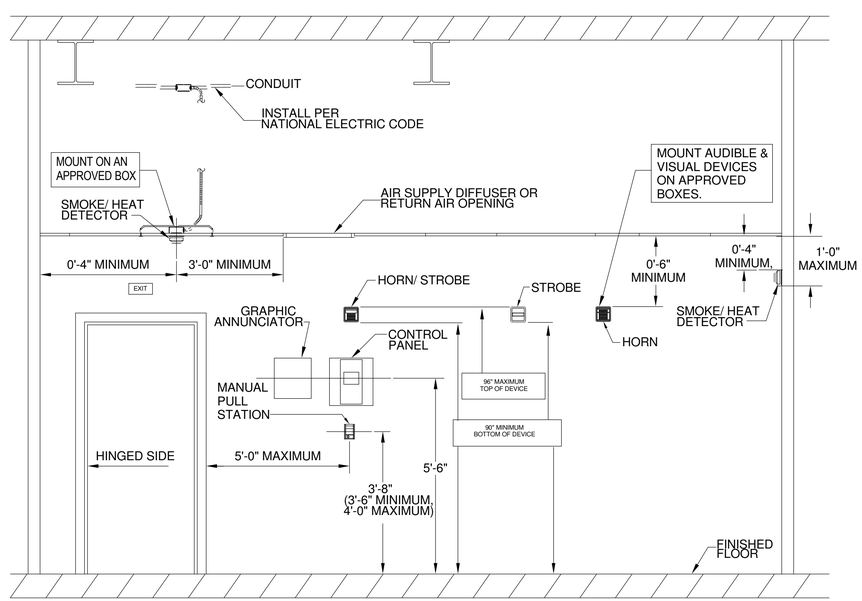

3 E507 **FIRE ALARM DEVICE MOUNTING**
SCALE: 12" = 1'-0"

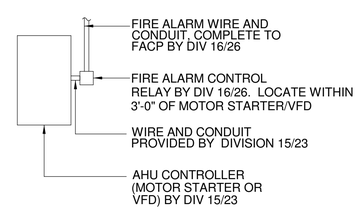

4 E507 **HVAC SHUTDOWN RELAY DIAGRAM**
SCALE: 12" = 1'-0"

CLIENT AND PROJECT

NORTH CAROLINA DEPARTMENT OF TRANSPORTATION

SCO ID NO.: 14-11006-01A

NEW DIVISION 8 OFFICE BUILDING

150 DOT DRIVE
CARTHAGE, NC 28327

DESIGNER

ANDRE JOHNSON ARCHITECT

PO BOX 14637
RALEIGH, NORTH CAROLINA 27620
TELEPHONE: 919.661.6935
MAIL: info@andrejohnsonarchitect.com

© 2015 Andre Johnson Architect, PLLC
Duplication or reproduction by any means without the express written consent of Andre L. Johnson, Architect is a violation of Federal and international law. The information contained on this document is the intellectual property of Andre L. Johnson, Architect and all rights thereto are Reserved. For exceptions, refer to the Owner-Architect Agreement.

CONSULTANT

RMF ENGINEERING, INC.
301 McCullough Drive, Suite 400
Charlotte, NC 28262

REGISTRATION

RMF ENGINEERING, INC. CERT. NO. C-1125 RALEIGH, N.C.

NORTH CAROLINA PROFESSIONAL SEAL 040879 ENGINEER DAVID P. FALCINELLI, JR.

Aug 25 2016

ISSUE

No.	Date	Description

SHEET INFO

ELECTRICAL DETAILS

E507

PROJECT NO: P1423.00
DATE: AUGUST 5, 2016
BID DOCUMENTS

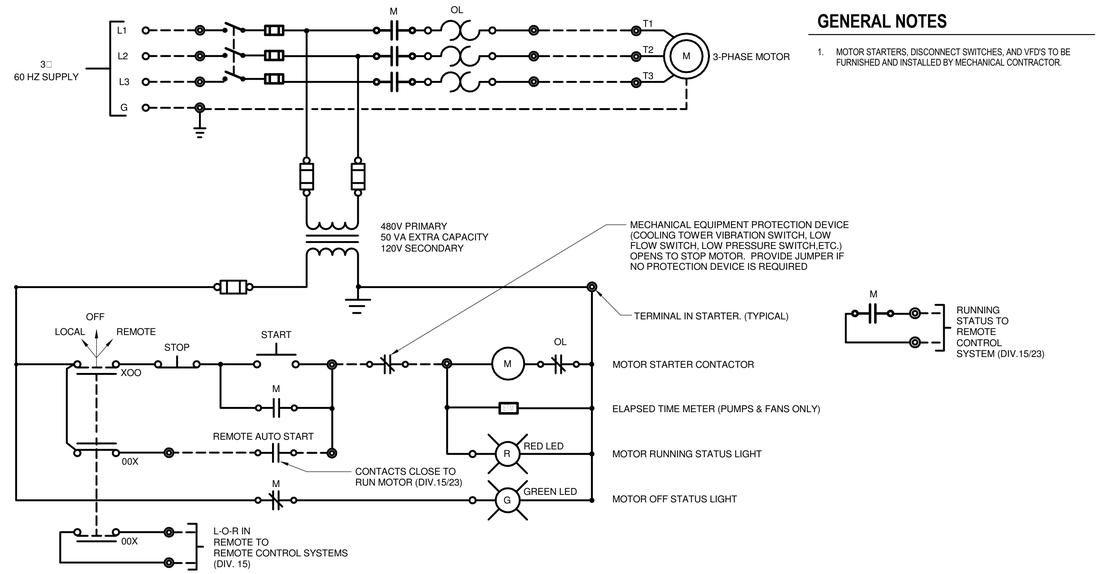

GENERAL NOTES

1. MOTOR STARTERS, DISCONNECT SWITCHES, AND VFD'S TO BE FURNISHED AND INSTALLED BY MECHANICAL CONTRACTOR.

DETAIL - TYP. 3-PHASE MOTOR CONTROL WIRING - MINIMUM REQUIREMENTS

1 / E508

SCALE: 12" = 1'-0"

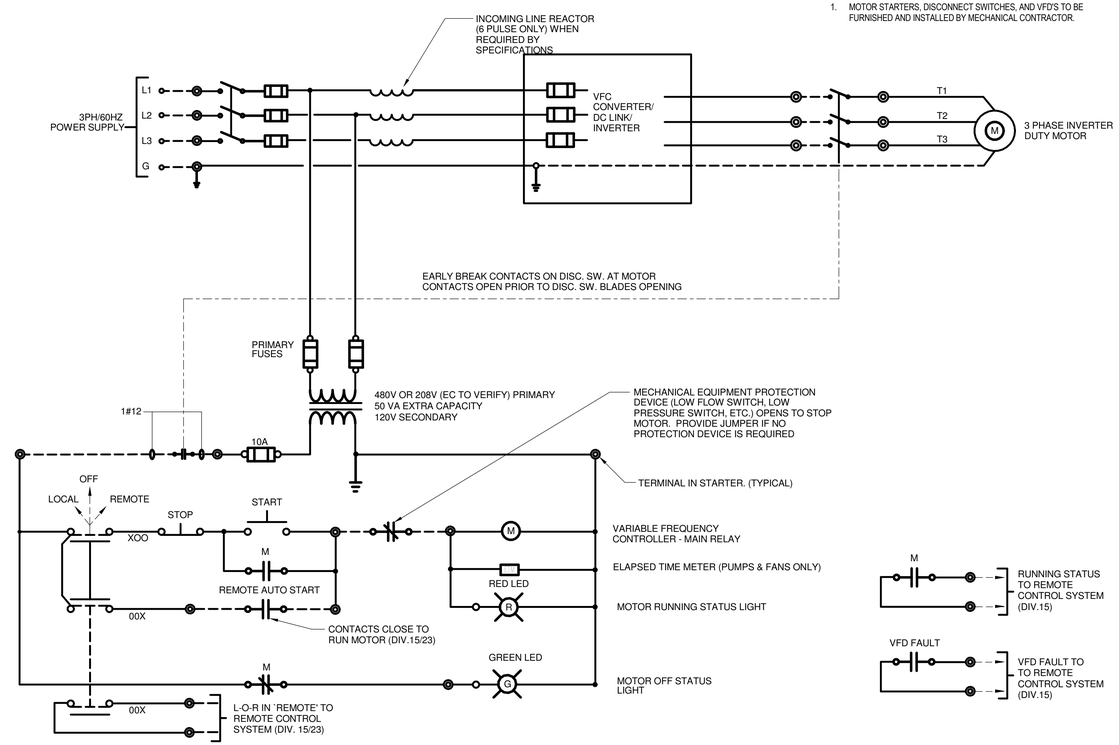

GENERAL NOTES

1. MOTOR STARTERS, DISCONNECT SWITCHES, AND VFD'S TO BE FURNISHED AND INSTALLED BY MECHANICAL CONTRACTOR.

DETAIL - TYP. VARIABLE FREQUENCY DRIVE MOTOR CONTROL - MINIMUM REQUIREMENTS

2 / E508

SCALE: 12" = 1'-0"

CLIENT AND PROJECT

NORTH CAROLINA DEPARTMENT OF TRANSPORTATION

SCO ID NO.: 14-11006-01A

NEW DIVISION 8 OFFICE BUILDING

150 DOT DRIVE
CARTHAGE, NC 28327

DESIGNER

ANDRE JOHNSON ARCHITECT

PO BOX 14637
RALEIGH, NORTH CAROLINA 27620
TELEPHONE: 919.661.6935
MAIL: info@andrejohnsonarchitect.com

© 2015 Andre Johnson Architect, PLLC
Duplication or reproduction by any means without the express written consent of Andre L. Johnson, Architect is a violation of Federal and international law. The information contained on this document is the intellectual property of Andre L. Johnson, Architect and all rights thereto are Reserved. For exceptions, refer to the Owner-Architect Agreement.

CONSULTANT

RMF ENGINEERING, INC.
301 McCullough Drive, Suite 400
Charlotte, NC 28262

REGISTRATION

RMF ENGINEERING, INC. CERT. NO. C-1125 RALEIGH, N.C.

NORTH CAROLINA PROFESSIONAL SEAL 040879 ENGINEER DAVID P. FALCINELLI, JR.

Aug 5 2016

ISSUE

No.	Date	Description

SHEET INFO

ELECTRICAL DETAILS

E508

PROJECT NO: P1423.00
DATE: AUGUST 5, 2016
BID DOCUMENTS

DRAWING NOTES:

1. FITTINGS AND ACCESSORIES TO INCLUDE BUT NOT LIMITED TO: ELBOWS, TEES, END PLATES, DROPOUTS AND REDUCING SPLICES.
2. SEE DRAWING FOR ROUTING.
3. PROVIDE BRACKETS, UNISTRUT, THREADED RODS, SQUARE WASHERS, NUTS, DOWN CLIPS SIZED TO SUPPORT CABLE TRAY WEIGHT REQUIREMENTS.

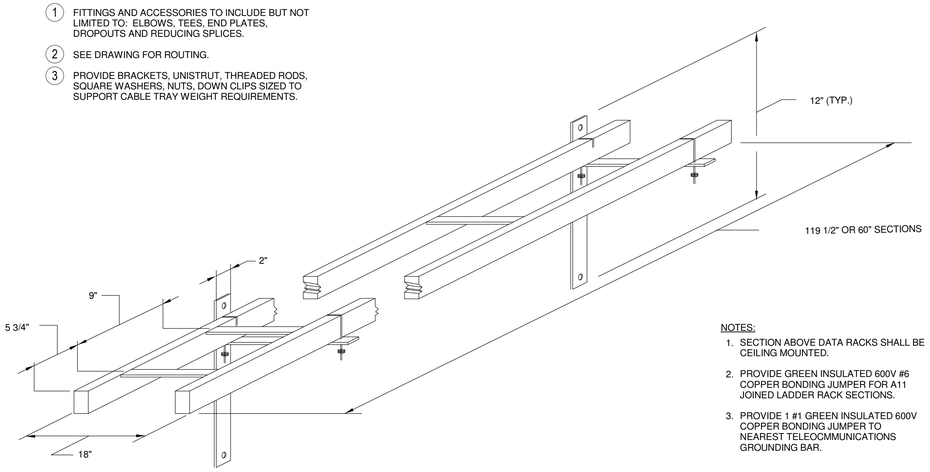

NOTES:

1. SECTION ABOVE DATA RACKS SHALL BE CEILING MOUNTED.
2. PROVIDE GREEN INSULATED 600V #6 COPPER BONDING JUMPER FOR A11 JOINED LADDER RACK SECTIONS.
3. PROVIDE 1 #1 GREEN INSULATED 600V COPPER BONDING JUMPER TO NEAREST TELEOCMMUNICATIONS GROUNDING BAR.

2 / E509 **DETAIL - WALL MOUNTED TELECOM LADDER RACK**
SCALE: 12" = 1'-0"

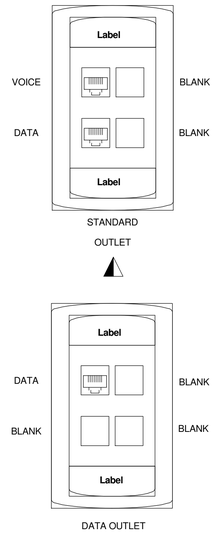

LEGEND

VOICE = RJ45 JACK (BLUE)
DATA = RJ45 JACK (YELLOW)
BLANK = COVER (WHITE)

NOTE:

1. ALL OUTLET BOXES FOR STATION OUTLETS SHALL BE 2-GANG WITH ADAPTORS TO SINGLE-GANG FACEPLATES.
2. REFER TO DIVISION 27 SPECIFICATIONS.

4 / E509 **DETAIL - TELECOM OUTLETS**
SCALE: 12" = 1'-0"

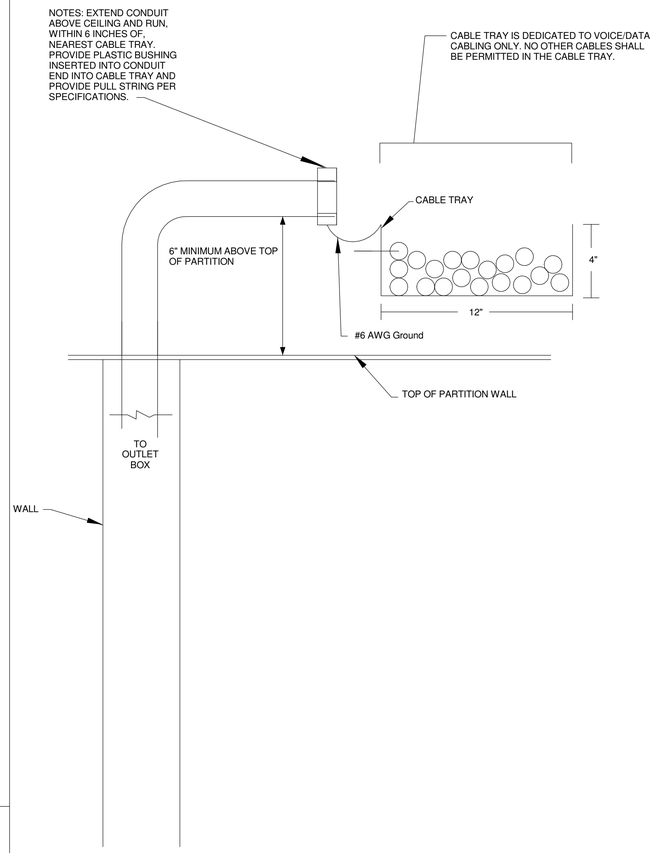

3 / E509 **DETAIL - TELECOM CONDUIT TO CABLE TRAY**
SCALE: 12" = 1'-0"

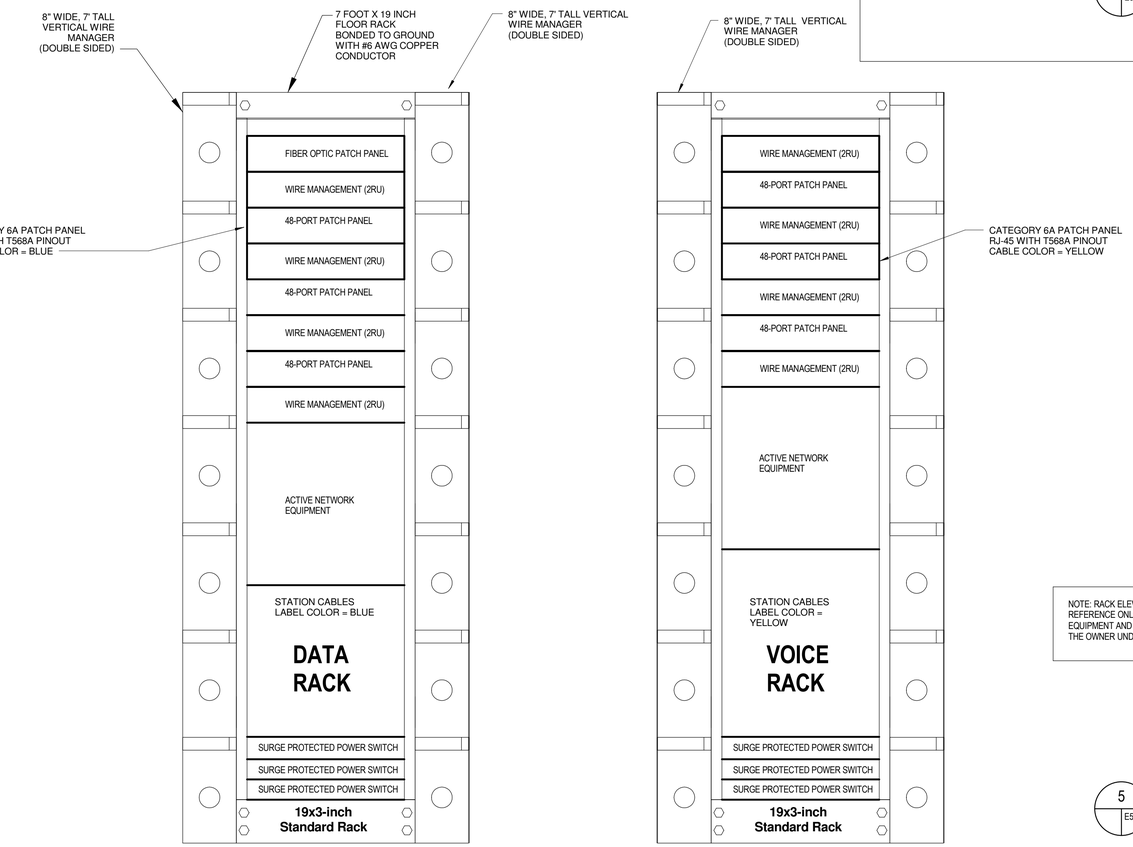

NOTE: RACK ELEVATIONS ARE SHOWN FOR REFERENCE ONLY. ALL TELECOMMUNICATIONS EQUIPMENT AND CABLE WILL BE PROVIDED BY THE OWNER UNDER A SEPARATE CONTRACT.

5 / E509 **DETAIL - TELECOM RACKS**
SCALE: 12" = 1'-0"

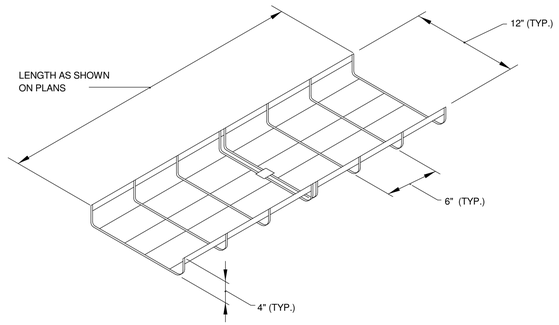

DRAWING NOTES:

1. SEE DRAWING FOR ROUTING.
2. PROVIDE SUPPORT BRACKETS, CLIPS, SUPPORT WASHERS RACK CLIPS, CONNECTORS AND THREADED ROD SIZED TO SUPPORT CABLE TRAY LOADING WEIGHT REQUIREMENTS. REFER TO SPECIFICATIONS SECTIONS 271100 AND 260529.

1 / E509 **DETAIL - BASKET CABLE TRAY (CORRIDOR)**
SCALE: 12" = 1'-0"

CLIENT AND PROJECT

NORTH CAROLINA DEPARTMENT OF TRANSPORTATION

SCO ID NO.: 14-11006-01A

NEW DIVISION 8 OFFICE BUILDING

150 DOT DRIVE
CARTHAGE, NC 28327

DESIGNER

ANDRE JOHNSON ARCHITECT
PO BOX 14637
RALEIGH, NORTH CAROLINA 27620
TELEPHONE: 919.661.6935
MAIL: info@andrejohnsonarchitect.com

© 2015 Andre Johnson Architect, PLLC
Duplication or reproduction by any means without the express written consent of Andre L. Johnson, Architect is a violation of Federal and international law. The information contained on this document is the intellectual property of Andre L. Johnson, Architect and all rights thereto are Reserved. For exceptions, refer to the Owner-Architect Agreement.

CONSULTANT

RMF ENGINEERING, INC.
301 McCullough Drive, Suite 400
Charlotte, NC 28262

REGISTRATION

RMF ENGINEERING, INC. CERT. NO. C-1125 RALEIGH, N.C.

NORTH CAROLINA PROFESSIONAL SEAL 040879 ENGINEER DAVID P. FALCINELLI, JR.

Aug 5 2016

ISSUE

No.	Date	Description

SHEET INFO

TELECOM DETAILS

E509

PROJECT NO: P1423.00
DATE: AUGUST 5, 2016
BID DOCUMENTS

DISTRIBUTION FEEDER SCHEDULE

(600V UNLESS OTHERWISE NOTED)

LEGEND:
P - PANEL

EXAMPLE:
P-100 - 100A PANEL FEEDER

LABEL	SETS	SIZE	GROUND	CONDUIT
MAIN	2	4#350	-	3-1/2"
SPD	1	4#6	#10	1-1/4"

LABEL	SETS	SIZE	GROUND	CONDUIT
P-20	1	4#12	#12	3/4"
P-25 / P-30	1	4#10	#10	3/4"
P-35 / P-40	1	4#8	#10	3/4"
P-45 / P-50	1	4#6	#10	1"
P-60	1	4#4	#10	1-1/4"
P-70 / P-80	1	4#4	#8	1-1/4"
P-90 / P-100	1	4#2	#8	1-1/4"
P-110	1	4#2	#6	1-1/2"
P-125	1	4#1/0	#6	2"
P-150	1	4#1/0	#6	2"
P-175	1	4#2/0	#6	2"

LABEL	SETS	SIZE	GROUND	CONDUIT
P-200	1	4#3/0	#6	2"
P-225	1	4#4/0	#4	2-1/2"
P-250	1	4#250	#4	3"
P-300	1	4#350	#4	3"
P-380	1	4#500	#2	3-1/2"
P-400	2	4#3/0	#2	2"
P-500	2	4#250	#2	3"
P-600	2	4#350	#1	3"
P-800	2	4#500	#1/0	3-1/2"

MOTOR & TRANSFORMER FEEDER SCHEDULE

(600V UNLESS OTHERWISE NOTED)

LEGEND:
M - MOTOR
TP/TS - XFMR (PRIMARY/SECONDARY)

EXAMPLE:
M-30 - 30HP MOTOR FEEDER
TP-75 - 75KVA TRANSFORMER PRIMARY

LABEL	SETS	SIZE	GROUND	CONDUIT
M-10	1	3#12	#12	3/4"
M-15	1	3#10	#10	3/4"
M-20	1	3#8	#10	3/4"
M-25 / M-30	1	3#6	#8	3/4"
M-40	1	3#4	#8	1"
M-50	1	3#3	#6	1-1/4"
M-60	1	3#1	#8	1-1/2"
M-75	1	3#1/0	#6	1-1/2"
M-100	1	3#2/0	#6	2"
M-125	1	3#3/0	#4	2"
M-250	1	3#350	#4	3"

LABEL	SETS	SIZE	GROUND	CONDUIT
TP-15	1	3#10	#10	3/4"
TP-30	1	3#6	#10	1"
TP-45	1	3#3	#8	1-1/4"
TP-75	1	3#1	#6	1-1/2"
TP-112	1	3#3/0	#6	2"
TP-150	1	3#250	#4	3"
TP-300	2	3#250	#2	3"

LABEL	SETS	SIZE	GROUND	CONDUIT
TS-15	1	4#4	#8	1-1/4"
TS-30	1	4#1	#6	1-1/2"
TS-45	1	4#1/0	#6	2"
TS-75	1	4#250	#2	3"
TS-112	1	4#500	#1/0	3-1/2"
TS-112K	1	5#500	#1/0	4"
TS-150	2	4#250	#1/0	3"
TS-300	3	4#400	#3/0	3"

PROJECT CODE/ELECTRICAL TERMINOLOGY DEFINITIONS

1. REFERENCES TO NEC (NATIONAL ELECTRICAL CODE) 700 LOADS ON THIS PROJECT ARE TO BE INTERPRETED AS MEANING 'EMERGENCY' LOADS AS DEFINED BY THE NORTH CAROLINA BUILDING CODE. THESE LOADS MAY ALSO BE REFERRED TO AS 'LIFE SAFETY' LOADS ON THIS PROJECT. THEY ARE ONE AND THE SAME.
2. NEC 701 LOADS REFERRED TO ON THIS PROJECT ARE TO BE INTERPRETED AS LEGALLY REQUIRED STANDBY LOADS AS DEFINED BY THE NORTH CAROLINA BUILDING CODE. THEY ARE ONE AND THE SAME.
3. NEC 702 LOADS REFERRED TO ON THIS PROJECT ARE TO BE INTERPRETED AS OPTIONAL LOADS AS DEFINED BY THE NEC ARTICLE 702. THESE LOADS ARE NEITHER 700 OR 701 LOADS.

GENERAL NOTES

1. ALL LOADS ARE NOT SHOWN ON THE SINGLE LINE DIAGRAM. REFER TO PANEL SCHEDULES FOR REMAINING LOADS AND FEEDER SIZES NOT SHOWN ON THE SINGLE LINE.
2. VFD FEEDER AND MOTOR BRANCH CIRCUIT HAVE BEEN SIZED BASED UPON MOTOR HP SHOWN. THE EC SHALL VERIFY THE MAXIMUM OPERATING CURRENT MARKED ON THE VFD AND SIZE THE FEEDER AND BRANCH CIRCUIT CONDUCTOR AMPACITY PER NEC 430.122(A).
3. ALL DIGITAL METERING SHALL BE TYPICAL MODBUS NETWORK SYSTEM. CONNECT TO BUILDING AUTOMATION/MANAGEMENT SYSTEM (DDCP).
4. ALL CURRENT METERING TRANSFORMERS SHALL BE CONNECTED AS SHOWN AND INSTALLED IN 3/4" MINIMUM CONDUIT.
5. FIRST DOWNSTREAM OVER CURRENT DEVICES SHOWN ON DRY TYPE TRANSFORMER SECONDARY FEEDERS SHALL BE LOCATED WITHIN 10FT. AS MEASURED BY CONDUCTOR LENGTH. THIS INCLUDES MAIN CIRCUIT BREAKERS LOCATED IN PANEL BOARDS.
6. MOTOR STARTERS, DISCONNECT SWITCHES, AND VFD'S TO BE FURNISHED AND INSTALLED BY CONTRACTOR FURNISHING EQUIPMENT.

DRAWING NOTES

1. TRANSFORMER PAD PROVIDED BY ELECTRICAL CONTRACTOR.
2. METER SHALL BE E-MON CLASS 5000, OR APPROVED EQUAL BY ELECTRO INDUSTRIES, SQUARE D, GENERAL ELECTRIC, CUTLER-HAMMER, OR SIEMENS. REFER TO SPECIFICATIONS FOR MORE INFORMATION.
3. PROVIDE PULL BOXES AT LOCATIONS INDICATED ON ENLARGED PLAN E-401. E.C. SHALL CAP CONDUIT AT HANDHOLE LOCATION INDICATED ON SITE PLAN AND AT PULL BOX LOCATIONS IN ELECTRICAL ROOM. FEEDER CONNECTIONS SHALL BE ROUTED DIRECTLY FROM BREAKER TO PANEL AS INDICATED. MAINTAIN DEDICATED SPACE FOR FUTURE TRANSFER SWITCH INSTALLATION (NOT IN SCOPE) AT LOCATION INDICATED ON PLANS.
4. UL LISTED FOR SERVICE ENTRANCE.
5. WIRING AND CONDUIT BY CONTRACTOR PROVIDING EQUIPMENT.
6. MOTOR STARTERS, DISCONNECT SWITCHES, AND VFD'S TO BE FURNISHED AND INSTALLED BY MECHANICAL CONTRACTOR.
7. WHERE A DISCONNECT IS REQUIRED BY THE NEC THIS DISCONNECT SHALL BE FURNISHED AND INSTALLED BY CONTRACTOR PROVIDING EQUIPMENT. DISCONNECT RATING SHALL MATCH OVERCURRENT PROTECTION PROVIDED IN POWER PANEL, SEE ELECTRICAL PANEL SCHEDULES.

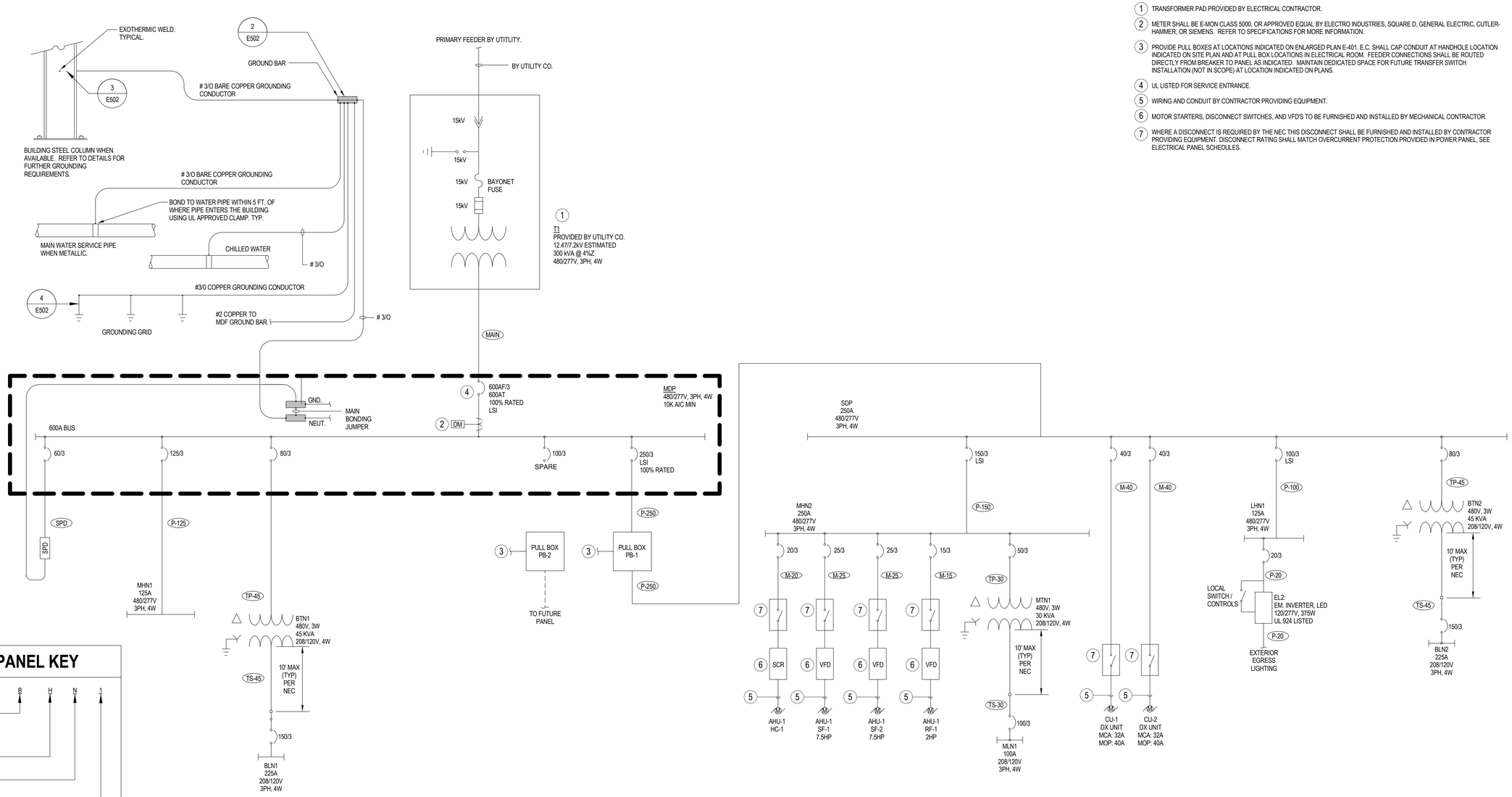

BRANCH PANEL KEY

B H N 1

B: BRANCH
D: DISTRIBUTION
M: MECHANICAL
L: LIGHTING

H: 277/480V
L: 120/208V

N: NORMAL
E: EMERGENCY
S: STANDBY

PANEL #

MDP: MAIN DISTRIBUTION PANEL
SDP: SECONDARY DISTRIBUTION PANEL

1 E601 **SINGLE LINE DIAGRAM - COMBINED**
SCALE: 12" = 1'-0"

CLIENT AND PROJECT

NORTH CAROLINA DEPARTMENT OF TRANSPORTATION

SCO ID NO.: 14-11006-01A

NEW DIVISION 8 OFFICE BUILDING

150 DOT DRIVE
CARTHAGE, NC 28327

DESIGNER

ANDRE JOHNSON ARCHITECT

PO BOX 14637
RALEIGH, NORTH CAROLINA 27620
TELEPHONE: 919.661.6935
MAIL: info@andrejohnsonarchitect.com

© 2015 Andre Johnson Architect, PLLC
Duplication or reproduction by any means without the express written consent of Andre L. Johnson, Architect is a violation of Federal and international law. The information contained on this document is the intellectual property of Andre L. Johnson, Architect and all rights thereto are Reserved. For exceptions, refer to the Owner-Architect Agreement.

CONSULTANT

RMF ENGINEERING, INC.
301 McCullough Drive, Suite 400
Charlotte, NC 28262

REGISTRATION

RMF ENGINEERING, INC. CERT. NO. C-1125 RALEIGH

NORTH CAROLINA PROFESSIONAL SEAL 048879 ENGINEER DAVID P. FALCINELLI, JR.

Aug 5 2016

ISSUE

No.	Date	Description

SHEET INFO

ELECTRICAL SINGLE LINE DIAGRAM

E601

PROJECT NO: P1423.00
DATE: AUGUST 5, 2016
BID DOCUMENTS

FIRE ALARM OPERATIONAL MATRIX

SYSTEM INPUTS	SYSTEMS OUTPUT – CONTROL UNIT ANNUNCIATION								NOTIFICATION								REQUIRED FIRE SAFETY CONTROL							
	ACTUATE COMMON ALARM SIGNAL INDICATOR	ACTUATE AUDIBLE ALARM SIGNAL	ACTUATE COMMON SUPERVISORY SIGNAL INDICATOR	ACTUATE AUDIBLE SUPERVISORY SIGNAL	ACTUATE COMMON TROUBLE SIGNAL INDICATOR	ACTUATE AUDIBLE COMMON TROUBLE SIGNAL	DISPLAY INDIVIDUAL INPUT DEVICE BY TYPE, ADDRESS AND DESCRIPTIVE LOCATION		ACTUATE NOTIFICATION APPLIANCES	DISPLAY/PRINT CHANGE OF STATUS	TRANSMIT FIRE ALARM SIGNAL TO SUPERVISING STATION	TRANSMIT SIGNAL TO SECURITY SYSTEM	TRANSMIT TROUBLE TO SUPERVISING STATION				SHUT DOWN AIR HANDLING EQUIPMENT-SEE NOTE 1.	RELEASE ELECTRICALLY SECURED EGRESS AND EXIT DOORS	BYPASS THE SHUTDOWN FEATURE FOR AIR HANDLING MOTORS AND ASSOCIATED DAMPERS	PLACE THE DUCT DETECTOR ELECTRONIC CIRCUITY INTO ALARM				
MANUAL FIRE ALARM BOXES	X	X					X		X	X	X	X					X	X						
SMOKE DETECTORS	X	X					X		X	X	X	X					X	X						
SMOKE DETECTORS LOBBY	X	X					X		X	X	X													
DUCT MOUNTED SMOKE DETECTORS FOR AHUS	X	X					X		X	X	X						X							
DUCT MOUNTED SMOKE DETECTORS AT SMOKE DAMPERS	X	X					X		X	X	X						X							
DUCT DETECTOR REMOTE TEST SWITCH ACTIVATION	X	X					X		X	X										X				
HVAC AHU SHUTDOWN BYPASS FUNCTION			X	X						X			X						X					
AREA HEAT DETECTORS	X	X					X		X	X	X						X	X						
FACP AC FAILURE					X	X				X			X											
FACP LOW BATTERY					X	X							X											
OPEN CIRCUIT					X	X							X											
GROUND FAULT					X	X							X											
NOTIFICATION APPLIANCE CIRCUIT SHORT					X	X							X											

GENERAL NOTES

1. REFER TO PLANS FOR EXACT QUANTITIES AND LOCATIONS FOR ALL DEVICES.
2. REFER TO FIRE ALARM MATRIX ON THIS DRAWING FOR ADDITIONAL INFORMATION.
3. DO NOT COMBINE LOOPS AT FACP INTO COMMON LOOP(S). EACH LOOP SHALL BE A DEDICATED LOOP FOR A DESIGNATED FLOOR.
4. PROVIDE A SEPARATE CLASS A, ADDRESSABLE SLC LOOP (SIGNALING LINE CIRCUIT) FOR EACH FLOOR DIVIDED INTO SB-LOOP 'A' & SUB-LOOP 'B' PER FLOOR.
5. DUCT MOUNTED SMOKE DETECTOR(S) SHALL BE INSTALLED AS INDICATED ON MECHANICAL DRAWINGS. SAMPLING TUBES SHALL BE INSTALLED FACING AIR STREAM WITH STOPPER ON OPPOSITE END. TUBES EXCEEDING 36" SHALL BE SUPPORTED AT THE REAR BY EXTENDING THROUGH THE DUCT WALL AND SEALING.
6. PROVIDE ISOLATION MODULES FOR THE OUTGOING AND INCOMING LOOPS AT THE FIRE ALARM CONTROL PANEL. TYPICAL FOR EACH FLOOR AND EACH FACP.
7. 120 VAC EMERGENCY CIRCUITS SHALL BE DEDICATED CIRCUITS TO EACH PANEL OR POWER SUPPLY. PROVIDE 'LOCK-ON' DEVICE ON CIRCUIT BREAKER MEETING NEC REQUIREMENTS.
8. WIRING AND CONNECTIVITY SHOWN ON THIS PLAN IS DIAGRAMMATIC AND SHOWN TO PROVIDE GENERAL SYSTEM CONFIGURATION INTENT. ACTUAL WIRING DIAGRAMS SHALL BE OBTAINED FOR INSTALLATION FROM SYSTEM MANUFACTURER.
9. ALL FIRE ALARM CABLING SHALL BE CONCEALED IN DEDICATED CONDUIT SYSTEM PER SPECIFICATIONS.

DRAWING NOTES

1. CLASS A, STYLE 6 ADDRESSABLE LOOP, SIGNALING LINE CIRCUIT (SLC) PROVIDE MIN #16 SHIELDED TWISTED PAIR (STP) IN 1/2" EMT (MIN).
2. CLASS B, NOTIFICATION APPLIANCE CIRCUIT (NAC). PROVIDE #14 CONDUCTORS IN 1/2" EMT (MIN). WIRE QUANTITIES TO BE DETERMINED BY THE INSTALLER. FOR INCREASED SURVIVABILITY, THE NAC DEVICES AND CIRCUITS ON EACH FLOOR SHALL BE DIVIDED IN HALF AND FED FROM SEPARATE RISERS FROM OPPOSITE ENDS OF THE FLOOR.
3. PROVIDE SYSTEM EVENT PRINTER MOUNTED ON SHELF ADJACENT TO FACP. SHELF SHALL HAVE METAL ADJUSTABLE WALL BRACKETS, METAL ARMS AND TWO (2)36"x18" WOODEN SHELVES. INSTALL PRINTER ON UPPER SHELF, PAPER ON LOWER.
4. PROVIDE ISOLATION MODULES (ISO) AS REQUIRED IN ACCORDANCE WITH SPECIFICATIONS. LOCATE IN CORRIDORS AT SAME HEIGHT AS ALL DEVICES (TYPICAL).
5. PROVIDE ADDRESSABLE RELAY CONTROL MODULE (ARC) AT MECHANICAL EQUIPMENT CONTROLLER. CONNECT SUCH THAT NOTED EQUIPMENT SHALL SHUT DOWN UPON RECEIPT OF ALARM. LOCATE WITHIN 3-FT OF EQUIPMENT CONTROLLER PER NFPA REQUIREMENTS.
6. WHEN REQUIRED, PROVIDE FIRE ALARM BOOSTER PANELS (FABP) FOR SIGNAL LOOP CIRCUITS. VERIFY QUANTITIES WITH CALCULATIONS AND REVISE AS REQUIRED. PROVIDE POWER FROM LIFE SAFETY SOURCE AS SHOWN ON POWER FLOOR PLANS. BOOSTER PANEL SHALL BE MONITORED PER THE SPECIFICATIONS.
7. PROVIDE REMOTE ALARM INDICATOR LAMP AND TEST SWITCH FOR EACH DUCT MOUNTED SMOKE DETECTOR. LOCATE IN NEAREST CORRIDOR OR PUBLIC AREA.
8. PROVIDE TWO (2) ANALOG TELEPHONE LINES (POTS) FOR OFFSITE MONITORING. COORDINATE REQUIREMENT WITH TELECOMMUNICATIONS CONTRACTOR AND RECEIVING STATION.
9. PROVIDE REMOTE ALARM ANNUNCIATOR PANEL (RAAP). COORDINATE EXACT AND FINAL LOCATION WITH AHJ.
10. PROVIDE NOTIFICATION APPLIANCE CIRCUIT (NAC) EXTENDER PANELS AS REQUIRED. PROVIDE SMOKE DETECTOR AT EACH LOCATION.
11. PROVIDE ADDRESSABLE RELAY CONTROL MODULE (ARC) AT MECHANICAL EQUIPMENT CONTROLLER. CONNECT SUCH THAT NOTED EQUIPMENT SHALL SHUT DOWN UPON RECEIPT OF ALARM.
12. WHERE INDICATED ON THE PLANS PROVIDE ADDRESSABLE RELAY CONTROL MODULE AT SECURITY DOORS. INTERLOCK WITH DOOR SOLENOID POWER CIRCUIT TO INTERRUPT CIRCUIT UPON GENERAL FIRE ALARM AS AS SHOWN IN THE FIRE ALARM CONTROL MATRIX.

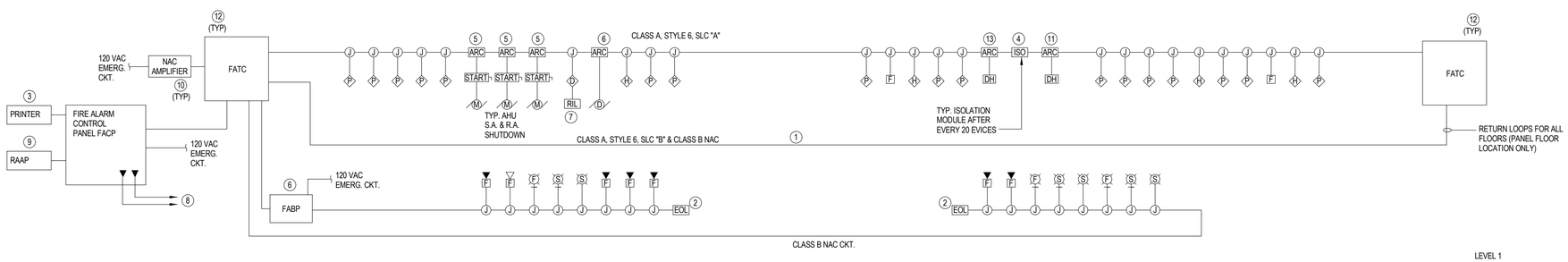

LEVEL 1

1 / E602 **FIRE ALARM RISER DIAGRAM**
SCALE: 12" = 1'-0"

CLIENT AND PROJECT

NORTH CAROLINA DEPARTMENT OF TRANSPORTATION

SCO ID NO.: 14-11006-01A

NEW DIVISION 8 OFFICE BUILDING
150 DOT DRIVE
CARTHAGE, NC 28327

DESIGNER

ANDRE JOHNSON ARCHITECT
PO BOX 14637
RALEIGH, NORTH CAROLINA 27620
TELEPHONE: 919.661.6935
MAIL: info@andrejohnsonarchitect.com

© 2015 Andre Johnson Architect, PLLC
Duplication or reproduction by any means without the express written consent of Andre L. Johnson, Architect is a violation of Federal and international law. The information contained on this document is the intellectual property of Andre L. Johnson, Architect and all rights thereto are Reserved. For exceptions, refer to the Owner-Architect Agreement.

CONSULTANT

RMF ENGINEERING, INC.
301 McCullough Drive, Suite 400
Charlotte, NC 28262

REGISTRATION

RMF ENGINEERING, INC. CERT. NO. C-1125 RALEIGH, N.C.

NORTH CAROLINA PROFESSIONAL SEAL 040879 ENGINEER DAVID P. FALCINELLI, JR.

Aug 5 2016

ISSUE

No.	Date	Description

SHEET INFO

FIRE ALARM RISER DIAGRAM

E602

PROJECT NO: P1423.00
DATE: AUGUST 5, 2016
BID DOCUMENTS

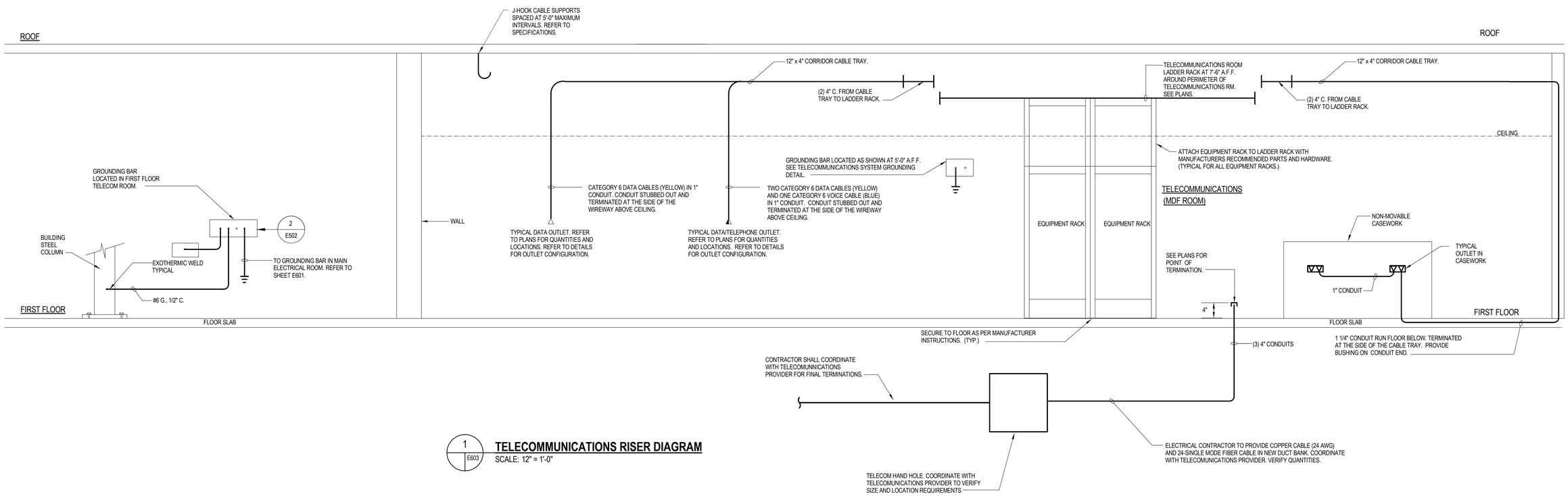

1 E603 **TELECOMMUNICATIONS RISER DIAGRAM**
SCALE: 12" = 1'-0"

CLIENT AND PROJECT

NORTH CAROLINA DEPARTMENT OF TRANSPORTATION

SCO ID NO.: 14-11006-01A

NEW DIVISION 8 OFFICE BUILDING

150 DOT DRIVE
CARTHAGE, NC 28327

DESIGNER

ANDRE JOHNSON ARCHITECT

PO BOX 14637
RALEIGH, NORTH CAROLINA 27620
TELEPHONE: 919.661.6935
MAIL: info@andrejohnsonarchitect.com

© 2015 Andre Johnson Architect, PLLC
Duplication or reproduction by any means without the express written consent of Andre L. Johnson, Architect is a violation of Federal and international law. The information contained on this document is the intellectual property of Andre L. Johnson, Architect and all rights thereto are Reserved. For exceptions, refer to the Owner-Architect Agreement.

CONSULTANT

RMF ENGINEERING, INC.
301 McCullough Drive, Suite 400
Charlotte, NC 28262

REGISTRATION

RMF ENGINEERING, INC. PA CERT. NO. C-1125 RALEIGH, NC

NORTH CAROLINA PROFESSIONAL SEAL 040879 ENGINEER DAVID P. FALCINELLI, JR.

Aug 5 2016

ISSUE

No.	Date	Description

SHEET INFO

TELECOM RISER DIAGRAM

E603

PROJECT NO: P1423.00
DATE: AUGUST 5, 2016
BID DOCUMENTS

GENERAL LIGHTING FIXTURE SCHEDULE NOTES:

* PROVIDE UNIVERSAL TYPE 120/277V BALLASTS AND/OR DRIVERS WHERE AVAILABLE. WHERE APPLICABLE, PROVIDE NECESSARY TRANSFORMATION TO MEET INTENDED DESIGN VOLTAGE.

** IT SHALL BE THE RESPONSIBILITY OF THE CONTRACTOR AND SUPPLIER TO PROVE EQUAL PERFORMANCE TO BASIS OF DESIGN FIXTURE AVAILABLE WITH LISTED EQUAL PRODUCTS. ONLY THE SERIES IS LISTED, IT SHALL BE THE RESPONSIBILITY OF THE SUPPLIER TO INCLUDE FULL MODEL NUMBERS AND OPTION SELECTIONS IN SUBMITTAL INFORMATION AND PROVE EQUALITY TO BASIS OF DESIGN FIXTURE SELECTION.

LIGHTING FIXTURE SCHEDULE REMARKS:

1. WHERE LOCATED IN GYPSUM CEILING, PROVIDE FLANGE TRIM KIT.

2. WET LOCATION LISTED.

3. REFER TO LIGHTING PLANS TO VERIFY CEILING OR WALL MOUNT.

4. PROVIDE BATTERY.

5. DAMP LOCATION LISTED.

6. PROVIDE ALL NECESSARY ACCESSORIES AS RECOMMENDED BY MANUFACTURER FOR COMPLETE INSTALLATION.

7. PROVIDE CHAIN KIT FOR MOUNTING, AND PROVIDE WIRE GUARD.

8. FIXTURE AND LIGHT POLE PROVIDED AND INSTALLED BY UTILITY COMPANY. SHOWN FOR REFERENCE ONLY.

9. CONNECTED TO REMOTE UL924 LISTED EMERGENCY INVERTER.

10. UPON UTILITY POWER LOSS, THE INVERTER UNIT SHALL DELIVER 100% OF ITS RATED OUTPUT TO THE EMERGENCY EGRESS FIXTURES REGARDLESS OF THE LOCAL SWITCH OR DIMMER POSITION DURING THE FULL 90 MINUTES OF EMERGENCY DISCHARGE CYCLE.

11. FIXTURE SHALL BE ORDERED WITH 2 SEPARATE DRIVERS AND LED BARS INDEPENDANTLY WIRED TO COMPLY WITH EGRESS LIGHTING REQUIREMENTS PER NC BUILDING CODE.

LIGHTING FIXTURE SCHEDULE

	DESCRIPTION	LOUVER/LENS	LAMPS TYPE	LAMPS WATTS	LAMPS QTY.	LAMPS COLOR TEMP.	BALLAST/DRIVER TYPE	BALLAST/DRIVER QTY.	VOLTAGE *	WATTS	MOUNTING	MOUNTING SURFACE	BASIS OF DESIGN MANUFACTURER/MODEL	APPROVED EQUAL MANUFACTURER/SERIES **	REMARKS
C1	48" NARROW LINEAR RECESSED		T8	32	2	3500 K	ELECTRONIC	1	277		CEILING	RECESSED	AXIS: B6R-F-FL-4-NL-T8-2-W-UNV-ERS-1-TB9	PINNACLE: EV6A SERIES; NULITE: REGOLO 4 GRID SERIES	
C1E	48" NARROW LINEAR RECESSED W/ BATTERY PACK		T8	32	2	3500 K	ELECTRONIC	1	277	59	CEILING	RECESSED	AXIS: B6R-F-FL-4-NL-T8-2-W-UNV-ERS-1-TB9-B1	PINNACLE: EV6A SERIES; NULITE: REGOLO 4 GRID SERIES	
D1	6" RECESSED CAN DOWNLIGHT		CFL	26	1	3500 K	ELECTRONIC	1	277	29	CEILING	RECESSED	COOPER: CD6142-E-6CH1421-LI	PRESCOLITE: LF6CFH226EB SERIES; JUNO: INDY C6H SERIES	
D1E	6" RECESSED CAN DOWNLIGHT W/ BATTERY PACK		CFL	26	1	3500 K	ELECTRONIC	1	277	29	CEILING	RECESSED	COOPER: CD6142-E-EM-6CH1421-LI	PRESCOLITE: LF6CFH226EB SERIES; JUNO: INDY C6H SERIES	4
D2	6" RECESSED CAN SHOWER LIGHT- WET LOCATION	LENSED	LED	22	1	3500 K	DRIVER	1	277	22	CEILING	RECESSED	COOPER: LD6A10D0TE-ERM6A10835-6LM0LIWF-LGSKTIP66	KIRLIN: LRR-05435 SERIES; GOTHAM: EVO ALED SERIES	2
D3	6" RECESSED CANOPY LIGHT - WET LOCATION W/ EMERGENCY INVERTER PACK	LENSED	LED	14.5	1	4000 K	DRIVER	1	277	15	CEILING	RECESSED	HALO: SLD612840WHUNVJB	PRESCOLITE: LBSLEDA10L SERIES; LITHONIA: VERSI LITE SERIES	2, 6, 9
EL1	EMERGENCY WALL LIGHT - W/ BATTERY PACK, SELF-DIAGNOSTIC		LED		2		BATTERY	1	277	0	WALL	SURFACE	SURE-LITES: SEL-25-SD	EMERGI-LITE: EL-2LED SERIES; LITHONIA: ELM2-LED-WRS	4
EL2	EMERGENCY INVERTER - SELF CONTAINED				0	0 K	BATTERY	1	277	0	WALL	SURFACE	SURE-LITES: INV375SILED	EMERGI-LITE: EMIU SERIES; LITHONIA: EAC FTM SERIES	10
EX	EXIT SIGN, UNIVERSAL, SELF-DIAGNOSTIC		Red LED		1		DRIVER	1	277	2	CEILING	SURFACE	SURE-LITES: EUX7-R-SD	EMERGI-LITE: LXN SERIES; EELP: EDGU SERIES	3
N1	48" INDUSTRIAL TURRET		T8	32	2	3500 K	ELECTRONIC	1	277	59	CEILING	SUSPENDED	COOPER: DCMF-232-UNV-EB81-U-WG/DIF4FT-U	COLUMBIA: KL-4-2-32-ST-E-U-KHC; LITHONIA: EJ SERIES	6, 7
N1E	48" INDUSTRIAL TURRET W/ BATTERY PACK		T8	32	2	3500 K	ELECTRONIC	1	277	59	CEILING	SUSPENDED	COOPER: DCMF-232-UNV-EL-EB81-U-WG/DIF4FT-U	COLUMBIA: KL-4-2-32-ST-E-U-EL-KHC; LITHONIA: EJ SERIES (WITH BATTERY)	4, 6, 7
PL1	PARKING LOT LED AREA LUMINAIRE (BY UTILITY CO.)		LED	223	1	4000 K	DRIVER	1	277	223	POLE	ARM	CREE - OSQ SERIES OR EQUVALENT		8
R1	2x4 DIRECT / INDIRECT	PERFORATED	T8	32	2	3500 K	ELECTRONIC	1	277	59	CEILING	RECESSED	COOPER:2RDI-232RP/TWB-UNV-ER82-U	COLUMBIA: STEL24-2-T8 SERIES; LITHOINIA: VT SERIES	
R1E	2x4 DIRECT / INDIRECT, W/ BATTERY PACK	PERFORATED	T8	32	2	3500 K	ELECTRONIC	1	277	59	CEILING	RECESSED	COOPER: 2RDI-232RP/TWB-UNV-EL-ER82-U	COLUMBIA: STEL24-2-T8 SERIES; LITHOINIA: VT SERIES	1, 4
R2	2x4 DIRECT / INDIRECT, DIMMING	PERFORATED	T8	32	2	3500 K	ELECTRONIC	1	277	59	CEILING	RECESSED	COOPER: 2RDI-232RP/TWB-UNV-5LTVS8-U	COLUMBIA: STEL24-2-T8 SERIES; LITHOINIA: VT SERIES	1
S1	4' ALL PURPOSE WALL MOUNT FIXTURE W/ BATTERY PACK	LENSED	T8	32	2	3500 K	ELECTRONIC	1	277	59	WALL	SURFACE	COOPER: BC-232-UNV-EL-EB81-U	COLUMBIA: W SERIES; LITHONIA: WC SERIES	
U2	UNDERCABINET ACCENT LIGHTING	LENSED	T8	17	1	3500 K	ELECTRONIC		277	16	UNDERCABINET	SURFACE	COOPER: CL-117-UNV-ER81-U	COLUMBIA: UC SERIES; LITHONIA: 2UC SERIES	6
W1	EXTERIOR WALL SCONCE	LENSED	LED	54	1	4000 K	DRIVER	1	277	54	WALL	SURFACE	COOPER: ENV-B02-LED-E1-BL4-BK	DECO: D458-LED SERIES; LITHONIA: WSR LED SERIES	2, 9, 11

NORTH CAROLINA ENERGY CODE DESIGNER'S STATEMENT

ELECTRICAL SUMMARY

ELECTRICAL SYSTEM AND EQUIPMENT

Method of Compliance:

Energy Code: ☒ Prescriptive ☐ Performance

Ashrae 90.1: ☒ Prescriptive ☐ Performance

Lighting Schedule

Lamp type required in fixture	SEE LIGHTING FIXTURE SCHEDULE
Number of lamps in fixture	SEE LIGHTING FIXTURE SCHEDULE
Ballast type used in fixture	SEE LIGHTING FIXTURE SCHEDULE
Number of ballasts in fixture	SEE LIGHTING FIXTURE SCHEDULE
Total wattage per fixture	SEE LIGHTING FIXTURE SCHEDULE
Total interior wattage specified vs. allowed	10,184 WATTS DESIGNED vs. 10,506 WATTS ALLOWED*
Total exterior wattage specified vs. allowed	427 WATTS DESIGNED vs. 651 WATTS ALLOWED*

Additional Prescriptive Compliance

☒ 506.2.1 More Efficient Mechanical Equipment
☐ 506.2.2 Reduced Lighting Power Density
☐ 506.2.3 Energy Recovery Ventilation Systems
☐ 506.2.4 Higher Efficiency Service Water Heating
☐ 506.2.5 On-Site Supply of Renewable Energy
☐ 506.2.6 Automatic Daylighting Control Systems

DESIGNER STATEMENT:
To the best of my knowledge and belief, the design of this building complies with the electrical system and equipment requirements of the North Carolina State Building Code, Volume X - Energy.

SIGNED: _____

NAME: DAVID P. FALCINELLI, PE

TITLE: PROJECT MANAGER/ ELECTRICAL ENGINEER

*ILLUMINATION LEVELS ARE NOT LESS THAN THOSE RECOMMENDED BY RS-43 AND ARE NOT LESS THAN LEVELS NECESSARY FOR SAFETY.

GENERAL LIGHTING NOTES:

1. REFER TO DIVISION 26 SPECIFICATIONS FOR EQUIPMENT/PRODUCT PERFORMANCE CRITERIA.
2. FLUORESCENT LAMPS NUMBERS ARE BASED UPON SYLVANIA LAMPS. REFER TO PROJECT SPECIFICATIONS MANUAL FOR EQUAL MANUFACTURERS AND PERFORMANCE CRITERIA.
3. EXAMPLES LISTED IN LIGHTING FIXTURE SCHEDULE ARE USED TO SET FORTH AND CONVEY THE GENERAL STYLE, TYPE, CHARACTER AND QUALITY OF PRODUCT DESIRED; EQUIVALENT PRODUCTS WILL BE ACCEPTABLE. SUBSTITUTIONS OF MATERIAL OR EQUIPMENT NOTED ON THE DRAWINGS AND IN THE LIGHTING SCHEDULE SHALL BE PROVEN EQUAL TO BASIS OF DESIGN AND APPROVED BY ENGINEER OF RECORD.
4. WHEREVER A MANUFACTURER IS LISTED AS "APPROVED EQUAL BY" THE PRODUCT SUBMITTED BY THE CONTRACTOR MUST MEET OR EXCEED THE BASE FIXTURE PERFORMANCE AND MUST MEET THE GENERAL AESTHETIC APPEARANCE OF THE BASE FIXTURE SPECIFIED. PDF DATA SHEETS ARE AVAILABLE OF THE BASE LIGHTING FIXTURE SPECIFIED UPON A WRITTEN REQUEST TO THE ENGINEER. THE ENGINEER SHALL DETERMINE WHETHER OR NOT THE "APPROVED EQUAL BY" FIXTURE SUBMITTED IS EQUAL TO THE BASE FIXTURE SPECIFIED.
5. ALL LIGHTING FIXTURE LAMPS, BALLASTS AND DRIVERS SHALL BE INCLUDED IN SUBMITTAL REVIEW. INCOMPLETE SUBMITTALS WILL BE REJECTED.
6. COORDINATE ABOVE-CEILING CLEARANCES REQUIRED FOR SPECIFIED FIXTURES WITH OTHER TRADES. NOTIFY RMF ENGINEERING AND ARCHITECT OF ANY DIMENSIONAL DISCREPANCIES ENCOUNTERED PRIOR TO INSTALLATION.
7. ALL EQUIPMENT LISTED SHALL BE INSTALLED IN ACCORDANCE WITH THE MANUFACTURER'S PRINTED INSTRUCTIONS AND IN COMPLIANCE WITH LOCAL AND NATIONAL ELECTRICAL CODE.
8. ALL LINEAR LIGHTING (LED, CATHODE, FLUORESCENT OR XENON) LENGTHS SHALL BE FIELD VERIFIED PRIOR TO ORDER TO ACHIEVE CONTINUOUS COVERAGE AS SHOWN ON LIGHTING DRAWINGS.
9. RECESSED FIXTURE HOUSING "THROAT", WHICH PROJECTS THROUGH CEILING HOLE, SHALL BE INSTALLED BE FLUSH WITH BOTTOM OF HOLE AT THE CEILING LINE TO ALLOW PROPER INSTALLATION OF REFLECTOR CONES. RECESSED LIGHT FIXTURE HOUSINGS SHALL BE PROPERLY SECURED TO STRUCTURE SO THAT WHEN CONES ARE INSTALLED FIXTURE DOES NOT MOVE UPWARDS. FIXTURE SHALL BE AFFIXED TO THE CEILING PER CODE & SPECIFICATION REQUIREMENTS.
10. ALL LAMPS SHALL BE NEW AND SUBSTANTIALLY UNUSED AT TIME OF PUNCH-LIST. TEMPORARY LAMPS OR FIXTURES ARE REQUIRED FOR USE DURING CONSTRUCTION. FLUORESCENT SOURCES ON DIMMING BALLASTS MUST BE ENERGIZED FOR 100 HOURS AT FULL BALLAST OUTPUT (100% LAMP OUTPUT) BEFORE DIMMING. LED SOURCES MUST BE OPERATED AND OBSERVED FOR IMPERFECTIONS BETWEEN 100 AND 150 HOURS OF BURN TIME. LED SOURCES THAT ARE SCHEDULE TO DIM, MUST BE DIMMED TO THEIR LOWEST LEVEL AND OPERATED THERE FOR AT LEAST 24 HOURS, THEN VIEWED FOR IMPERFECTIONS. CONTRACTOR TO ADVISE RMF ENGINEERING OF OBSERVATIONS OF THESE RESULTS (FLICKERING, BURNED-OUT SECTIONS OR NODES, COLOR TEMPERATURE SHIFT, ETC.) AFTER THE PRESCRIBED BURN-IN TIMES.
11. RECESSED LIGHT FIXTURE REFLECTOR CONES/TRIMS SHALL NOT BE INSTALLED WHEN CEILING IS WET FROM PLASTER OR PAINT (ONLY INSTALL IN DRY CEILINGS TO PREVENT CONES FROM ADHERING TO CEILING). ANY DAMAGE TO THE CONES OR CEILING FINISH WILL BE THE RESPONSIBILITY OF THE ELECTRICAL CONTRACTOR. NO SILICONE OR OTHER ADHESIVE PRODUCT FOREIGN TO THE FIXTURE SHALL BE USED TO PERMANENTLY AFFIX THE CONES TO THE HOUSING AND/OR CEILING. ANY DAMAGE CAUSED BY SUCH PRODUCT (EITHER DURING OR SUBSEQUENT TO INSTALLATION) SHALL BE THE RESPONSIBILITY OF THE ELECTRICAL CONTRACTOR.
12. CONTRACTOR SHALL COORDINATE FINAL AIMING AND DIMMING LEVELS WITH RMF DURING PERIOD OF PUNCH-LIST. A MINIMUM OF 3-WEEKS NOTICE IS REQUIRED TO SCHEDULE THIS PROCEDURE. CONTRACTOR SHALL PROVIDE LADDERS OR EQUIPMENT AS NECESSARY, AND COORDINATE PRESENCE OF ELECTRICIANS OR OTHER TRADES AS REQUIRED. A MINIMUM OF TWO ELCTRICIANS WHO ARE VERY FAMILIAR WITH THE JOB WILL BE REQUIRED TO BE ON SITE THROUGHOUT THE FINAL AIMING AND TUNING PROCESS. ELECTRICAL CONTRACTOR TO PROVIDE FIXTURE ACCESS AND AIMING ASSISTANCE DURING THIS PERIOD. VERIFY WITH RMF ENGINEERING FOR AN ESTIMATED DURATION OF THIS PROCESS (MINIMUM 5 EVENINGS, 8 HOURS EACH), INCLUDE WITH LABOR BID.
13. ELECTRICAL CONTRACTOR SHALL FOLLOW ALL MANUFACTURERS INSTALLATION INSTRUCTIONS. FOR ANY QUESTIONS REGARDING FIXTURE INSTALLATION, CONTACT MANUFACTURER FOR DIRECTIONS. RMF ENGINEERING IS NOT RESPONSIBLE FOR ANY DAMAGES ASSOCIATED WITH INCORRECTLY INSTALLED PRODUCT.
14. LIGHTING SHALL BE CONNECTED TO DISTRIBUTED NETWORK LIGHTING CONTROLS SYSTEM AND SHALL UTILIZE SENSORS WITH INTELLIGENT POWER PACKS AND/OR SWITCHES AS SHOWN ON PLANS, UNLESS OTHERWISE NOTED. REFER TO DETAIL SHEETS FOR MORE INFORMATION ON TYPICAL SENSOR WIRING DIAGRAMS. REFER TO SPECIFICATIONS FOR ADDITIONAL DETAILS.
15. ALL JUNCTION BOXES SHALL BE LOCATED ABOVE ACCESSIBLE CEILINGS. NO ACCESS PANELS WILL BE PERMITTED IN GYPSUM CEILINGS.
16. COORDINATE LOCATIONS OF CEILING MOUNTED FIXTURES WITH ARCHITECTURAL REFLECTED CEILING PLANS.
17. ON A FLOOR BY FLOOR BASIS, UPON POWER FAILURE OF ANY NORMAL BRANCH LIGHTING CIRCUIT THAT IS CONNECTED TO THE NETWORK LIGHTING CONTROL SYSTEM, ALL REMAINING LIGHTING CIRCUITS CONNECTED TO THE NETWORK LIGHTING CONTROL SYSTEM SHALL DEFAULT TO A NON-DIMMED 'ON' CONDITION UNTIL POWER IS RESTORED TO THE NORMAL CIRCUIT.
18. WHEREVER OCCUPANCY SENSORS ARE USED, PROVIDE MULTIPLE POWER PACKS TO CONTROL MULTIPLE CIRCUITS WITHIN THE SAME AREA/ROOM. POWER PACKS ARE NOT SHOWN.
19. ALL DRIVERS AND BALLASTS SHALL BE INTEGRAL TO THE LIGHTING FIXTURE, UNLESS SPECIFICALLY NOTED AS REMOTE.
20. WHERE SELECTIONS ARE INDICATED AS "TBD" IN LUMINARE SCHEDULE, FINAL SELECTION SHALL BE DETERMINED DURING THE SUBMITTAL PROCESS FROM MANUFACTURER'S LISTED OPTIONS.

CLIENT AND PROJECT

NORTH CAROLINA DEPARTMENT OF TRANSPORTATION

SCO ID NO.: 14-11006-01A

NEW DIVISION 8 OFFICE BUILDING

150 DOT DRIVE
CARTHAGE, NC 28327

DESIGNER

ANDRE JOHNSON ARCHITECT
PO BOX 14637
RALEIGH, NORTH CAROLINA 27620
TELEPHONE: 919.661.6935
MAIL: info@andrejohnsonarchitect.com

© 2015 Andre Johnson Architect, PLLC
Duplication or reproduction by any means without the express written consent of Andre L. Johnson, Architect is a violation of Federal and international law. The information contained on this document is the intellectual property of Andre L. Johnson, Architect and all rights thereto are Reserved. For exceptions, refer to the Owner-Architect Agreement.

CONSULTANT

RMF ENGINEERING, INC.
301 McCullough Drive, Suite 400
Charlotte, NC 28262

REGISTRATION

RMF ENGINEERING, INC. CERT. NO. C-1125 RALEIGH, NC

NORTH CAROLINA PROFESSIONAL SEAL 040879 ENGINEER DAVID P. FALCINELLI, JR.

Aug 5 2016

ISSUE

No. Date Description

SHEET INFO

ELECTRICAL LIGHTING FIXTURE SCHEDULE

E701

PROJECT NO: P1423.00
DATE: AUGUST 5, 2016
BID DOCUMENTS

EQUIPMENT & MOTOR SCHEDULE - AIR HANDLERS

DESIGNATION	DESCRIPTION	LOCATION	KVA	VOLT	PHASE	HP	PANEL NAME	CIRCUIT #	WIRE SIZE (MINIMUM)	MOCP	BREAKER TYPE	STARTER/DISCONNECT NOTES	FIRE ALARM NOTES	REMARKS
AHU-1	AHU CONTROL, LIGHTS & RECPTACLES	MECHANICAL ROOM	0.60	120	1		MLN1	1	2-#12, #12 G, 3/4" C.	20		U	c	
CU-1	AHU - OUTDOOR DX UNIT	EXTERIOR, SEE SHEET E101	11.46	480	3		SDP	7,9,11	3-#8, #10 G, 1" C.	40		U	c	3
CU-2	AHU - OUTDOOR DX UNIT	EXTERIOR, SEE SHEET E101	11.46	480	3		SDP	13,15,17	3-#8, #10 G, 1" C.	40		U	c	3
HC-1	AHU - IN-DUCT HEATING COIL	MECHANICAL ROOM	11.10	480	3		MHN2	7,9,11	3-#12, #12 G, 3/4" C.	20		U	c	
RF-1	AHU - RELIEF FAN	MECHANICAL ROOM	2.83	480	3	2	MHN2	25,27,29	3-#12, #12 G, 3/4" C.	15		N,U	a	
SF-1	AHU - SUPPLY FAN	MECHANICAL ROOM	9.14	480	3	7.5	MHN2	13,15,17	3-#12, #12 G, 1" C.	25		N,U	a	3
SF-2	AHU - SUPPLY FAN	MECHANICAL ROOM	9.14	480	3	7.5	MHN2	19,21,23	3-#12, #12 G, 1" C.	25		N,U	a	3

EQUIPMENT & MOTOR SCHEDULE - SPLIT SYSTEMS

DESIGNATION	DESCRIPTION	LOCATION	KVA	VOLT	PHASE	HP	PANEL NAME	CIRCUIT #	WIRE SIZE (MINIMUM)	MOCP	BREAKER TYPE	STARTER/DISCONNECT NOTES	FIRE ALARM NOTES	REMARKS
IU-1	DX SPLIT SYSTEM EVAPORATOR	ELECTRICAL ROOM	0.00	0	1				SEE REMARKS	SEE REMARKS		Q		1
IU-2	DX SPLIT SYSTEM EVAPORATOR	TELECOM ROOM	0.00	0	1				SEE REMARKS	SEE REMARKS		Q		1
IU-3	DX SPLIT SYSTEM EVAPORATOR	SERVER ROOM	0.00	0	1				SEE REMARKS	SEE REMARKS		Q		1
OU-1	DX SPLIT SYSTEM CONDENSING UNIT	EXTERIOR ROOF	3.00	208	2		MLN1	7,9	2-#12, #12 G, 3/4" C.	20		U		
OU-2	DX SPLIT SYSTEM CONDENSING UNIT	EXTERIOR ROOF	3.00	208	2		MLN1	11,13	2-#12, #12 G, 3/4" C.	20		U		
OU-3	DX SPLIT SYSTEM CONDENSING UNIT	EXTERIOR	3.00	208	2		MLN1	15,17	2-#12, #12 G, 3/4" C.	20		U		

EQUIPMENT & MOTOR SCHEDULE - EXHAUST FANS

DESIGNATION	DESCRIPTION	LOCATION	KVA	VOLT	PHASE	HP	PANEL NAME	CIRCUIT #	WIRE SIZE (MINIMUM)	MOCP	BREAKER TYPE	STARTER/DISCONNECT NOTES	FIRE ALARM NOTES	REMARKS
EF-1	EXHAUST FAN	ROOF	0.53	120	1	1/6	MLN1	14	2-#12, #12 G, 3/4" C.	15		U		

EQUIPMENT & MOTOR SCHEDULE - FAN POWER UNITS

DESIGNATION	DESCRIPTION	LOCATION	KVA	VOLT	PHASE	HP	PANEL NAME	CIRCUIT #	WIRE SIZE (MINIMUM)	MOCP	BREAKER TYPE	STARTER/DISCONNECT NOTES	FIRE ALARM NOTES	REMARKS
FPU-1	FAN POWERED UNIT	SEE PLANS	2.90	277	1	.125	MHN2	2	2-#12, #12 G, 3/4" C.	20		Q		
FPU-2	FAN POWERED UNIT	SEE PLANS	2.50	277	1	.125	MHN2	4	2-#12, #12 G, 3/4" C.	20		Q		
FPU-3	FAN POWERED UNIT	SEE PLANS	4.40	277	1	.125	MHN2	6	2-#10, #10 G, 3/4" C.	25		Q		
FPU-4	FAN POWERED UNIT	SEE PLANS	2.10	277	1	.125	MHN1	4	2-#12, #12 G, 3/4" C.	20		Q		
FPU-5	FAN POWERED UNIT	SEE PLANS	4.60	277	1	.125	MHN1	6	2-#10, #10 G, 3/4" C.	25		Q		
FPU-6	FAN POWERED UNIT	SEE PLANS	2.20	277	1	.125	MHN1	7	2-#12, #12 G, 3/4" C.	20		Q		
FPU-7	FAN POWERED UNIT	SEE PLANS	2.00	277	1	.125	MHN1	8	2-#12, #12 G, 3/4" C.	20		Q		
FPU-8	FAN POWERED UNIT	SEE PLANS	3.10	277	1	.125	MHN1	9	2-#12, #12 G, 3/4" C.	20		Q		
FPU-9	FAN POWERED UNIT	SEE PLANS	3.10	277	1	.125	MHN1	10	2-#12, #12 G, 3/4" C.	20		Q		
FPU-10	FAN POWERED UNIT	SEE PLANS	2.40	277	1	.125	MHN1	11	2-#12, #12 G, 3/4" C.	20		Q		
FPU-11	FAN POWERED UNIT	SEE PLANS	4.70	277	1	.125	MHN1	12	2-#10, #10 G, 3/4" C.	25		Q		
FPU-12	FAN POWERED UNIT	SEE PLANS	4.20	277	1	.125	MHN1	13	2-#12, #12 G, 3/4" C.	20		Q		
FPU-13	FAN POWERED UNIT	SEE PLANS	5.20	277	1	.125	MHN2	8	2-#10, #10 G, 3/4" C.	25		Q		
FPU-14	FAN POWERED UNIT	SEE PLANS	3.10	277	1	.125	MHN2	10	2-#12, #12 G, 3/4" C.	20		Q		
FPU-15	FAN POWERED UNIT	SEE PLANS	2.70	277	1	.125	MHN2	12	2-#12, #12 G, 3/4" C.	20		Q		
FPU-16	FAN POWERED UNIT	SEE PLANS	4.90	277	1	.125	MHN2	14	2-#10, #10 G, 3/4" C.	25		Q		
FPU-17	FAN POWERED UNIT	SEE PLANS	2.50	277	1	.125	MHN2	16	2-#12, #12 G, 3/4" C.	20		Q		
FPU-18	FAN POWERED UNIT	SEE PLANS	2.90	277	1	.125	MHN2	18	2-#12, #12 G, 3/4" C.	20		Q		
FPU-19	FAN POWERED UNIT	SEE PLANS	2.60	277	1	.125	MHN2	20	2-#12, #12 G, 3/4" C.	20		Q		
FPU-20	FAN POWERED UNIT	SEE PLANS	5.50	277	1	.125	MHN1	14	2-#10, #10 G, 3/4" C.	25		Q		
FPU-21	FAN POWERED UNIT	SEE PLANS	2.70	277	1	.125	MHN1	15	2-#12, #12 G, 3/4" C.	20		Q		
FPU-22	FAN POWERED UNIT	SEE PLANS	2.40	277	1	.125	MHN1	16	2-#12, #12 G, 3/4" C.	20		Q		

EQUIPMENT & MOTOR SCHEDULE - VAV UNITS

DESIGNATION	DESCRIPTION	LOCATION	KVA	VOLT	PHASE	HP	PANEL NAME	CIRCUIT #	WIRE SIZE (MINIMUM)	MOCP	BREAKER TYPE	STARTER/DISCONNECT NOTES	FIRE ALARM NOTES	REMARKS
VAV-1	SUPPLY VAV UNIT	SEE PLANS	1.57	277	1	.125	MHN2	22	2-#12, #12 G, 3/4" C.	20		Q		
VAV-2	SUPPLY VAV UNIT	SEE PLANS	1.95	277	1	.125	MHN1	2	2-#12, #12 G, 3/4" C.	20		Q		
VAV-3	SUPPLY VAV UNIT	SEE PLANS	1.95	277	1	.125	MHN1	2	2-#12, #12 G, 3/4" C.	20		Q		

EQUIPMENT & MOTOR SCHEDULE - MISCELLENEOUS

DESIGNATION	DESCRIPTION	LOCATION	KVA	VOLT	PHASE	HP	PANEL NAME	CIRCUIT #	WIRE SIZE (MINIMUM)	MOCP	BREAKER TYPE	STARTER/DISCONNECT NOTES	FIRE ALARM NOTES	REMARKS
DDCP	DDC PANEL, MISC	MECHANICAL ROOM	0.60	120	1		MLN1	3	2-#12, #12 G, 3/4" C.	20				
IM-1	ICE MACHINE, MISC	MECHANICAL ROOM	1.20	120	1		BLN1	14	2-#12, #12 G, 3/4" C.	20				
RP-1	RECIRCULATION PUMP, MISC	MECHANICAL ROOM	0.53	120	1	1/40	MLN1	12	2-#12, #12 G, 3/4" C.	15		Q		2
WH-1	WATER HEATER, MISC	MECHANICAL ROOM	9.00	480	3		MHN1	1,3,5	3-#12, #12 G, 3/4" C.	20		U		

GENERAL NOTES:

1. VERIFY EXACT REQUIREMENTS WITH MANUFACTURER PRIOR TO ROUGH IN.
2. ALL CONTROL DEVICES ARE TO BE SURFACE MOUNTED UNLESS OTHERWISE NOTED.
3. PROVIDE LABEL WITH EQUIPMENT DESIGNATION AND POWER SOURCE AT EACH DISCONNECT AND/OR STARTER.

STARTER/DISCONNECT NOTES:

A. MANUAL MOTOR STARTER
B. MANUAL MOTOR STARTER - TWO SPEED CONTROLLER
C. MAGNETIC STARTER
D. COMBINATION MAGNETIC STARTER
E. COMBINATION TWO SPEED MAGNETIC STARTER
F. PACKAGED CONTROL UNIT
G. CONTACTOR
H. CAPACITORS
I. ELECTRIC THERMOSTAT
J. STOP/START PUSH BUTTON IN COVER
K. H-O-A SWITCH IN COVER
L. PILOT LIGHT IN COVER
M. MANUAL MOTOR STARTER WITH RELAY (RELAY TO ACCOMODATE DDC CONTROL)
N. VARIABLE FREQUENCY DRIVE
O. DUPLEX CONTROLLER WITH ALTERNATION CIRCUIT
P. PROVIDE DUPLEX RECEPTACLE FOR EQUIPMENT CONNECTION
Q. PROVIDE MOTOR RATED SNAP SWITCH
R. PROVIDE REMOTE EMERGENCY POWER OFF BUTTON. LOCATE AS NOTED ON DRAWINGS
S. PROVIDE NON-FUSED DISCONNECT AT UNIT. SIZE DISCONNECT PER EQUIPMENT NAMEPLATE RATINGS.
T. PROVIDE FUSED DISCONNECT AT UNIT, OR AS SHOWN ON DRAWINGS. SIZE DISCONNECT, FUSES AND MOTOR THERMAL OVERLOADS PER EQUIPMENT NAMEPLATE RATINGS.
U. STARTER AND/OR DISCONNECTING MEANS FURNISHED BY DIVISION SPECIFYING EQUIPMENT. REFER TO DIVISION OF RESPONSIBILITES DETAIL ON DRAWING E5.01 FOR ADDITIONAL REQUIREMENTS.
V. SPLIT SYSTEM WITH CONNECTION AT EXTERIOR UNIT (PROVIDE RACEWAY FROM EXTERIOR UNIT TO INTERIOR UNIT) VERIFY EXACT REQUIREMENTS WITH MANUFACTURER PRIOR TO ROUGH IN
W. LOCATE CONTROLLER OUTSIDE OF ELEVATOR SHAFT AND ELEVATOR MACHINE ROOM

FIRE ALARM NOTES:

a. FIRE ALARM FAN SHUTDOWN
b. PROVIDE SHUNT TRIP BREAKERS AND CONNECTION TO FIRE ALARM SYSTEM
c. PROVIDE INTERCONNECTION TO FIRE ALARM SYSTEM. OPERATION SHALL BE IN ACCORDANCE WITH FIRE ALARM MATRIX, REFER TO FIRE ALARM DRAWINGS.

REMARKS:

1. POWERED FROM CONDENSING UNIT LOCATED ON ROOF.
2. REMOTE PUMP CONTROLLER; REFER TO TO PLUMBING DRAWINGS FOR FINAL LOCATIONS AND REQUIREMENTS. COORDINATE WITH P.C. PRIOR TO ROUGH-IN.
3. SINGLE POINT CONNECTION. COORDINATE WITH M.C.

CLIENT AND PROJECT

NORTH CAROLINA DEPARTMENT OF TRANSPORTATION

SCO ID NO.: 14-11006-01A

NEW DIVISION 8 OFFICE BUILDING

150 DOT DRIVE
CARTHAGE, NC 28327

DESIGNER

ANDRE JOHNSON ARCHITECT

PO BOX 14637
RALEIGH, NORTH CAROLINA 27620
TELEPHONE: 919.661.6935
MAIL: info@andrejohnsonarchitect.com

© 2015 Andre Johnson Architect, PLLC
Duplication or reproduction by any means without the express written consent of Andre L. Johnson, Architect is a violation of Federal and international law. The information contained on this document is the intellectual property of Andre L. Johnson, Architect and all rights thereto are Reserved. For exceptions, refer to the Owner-Architect Agreement.

CONSULTANT

RMF ENGINEERING, INC.
301 McCullough Drive, Suite 400
Charlotte, NC 28262

REGISTRATION

Aug 5 2016

ISSUE

No. Date Description

SHEET INFO

ELECTRICAL MOTOR AND EQUIPMENT SCHEDULE

E702

PROJECT NO: P1423.00
DATE: AUGUST 5, 2016
BID DOCUMENTS

PANELBOARD: MDP

LOCATION: Elec Room
MOUNTING: Surface
ENCL NEMA: Type 1
MIN AIC: 22,000

MAINS: 600A MCB
VOLTS: 480/277 Wye
PHASE: 3
WIRES: 4

BUS AMPS: 600

PANEL NOTES: PROVIDE GROUND BUS
PROVIDE FULL SIZE NEUTRAL BUS UNLESS NOTED OTHERWISE

WIRE SIZE	LOAD DESCRIPTION	P	TRIP AMPS	TYPE	CKT	A		B		C		CKT	TYPE	TRIP AMPS	P	LOAD DESCRIPTION	WIRE SIZE
SEE SHEET E601	MHN1	3	125 A		1	20.80	7.62					2		80 A	3	BLN1 (VIA BTN1)	SEE SHEET E601
					3			16.40	5.88			4					
					5					14.70	7.02	6					
--	SPARE	3	100 A	--	7	0.00	48.97					8		250 A	3	SDP	SEE SHEET E601
					9			0.00	41.80			10					
					11					0.00	41.61	12					
					13							14					
					15							16					
					17							18					
					19							20					
					21							22					
					23							24					
--	SPD	3	60 A	--	25	0.00						26					
					27			0.00				28					
					29					0.00		30					
				TOTAL LOAD:		77.39 kVA		64.08 kVA		63.33 kVA							

BREAKER TYPE KEYS:
LO - INDICATES C.B. EQUIPPED WITH "LOCK-ON" DEVICE
GF - INDICATES C.B. IS GROUND FAULT TYPE (5mA FOR PERSONNEL)
ST - INDICATES C.B. EQUIPPED WITH SHUNT TRIP DEVICE
HT - INDICATES C.B. EQUIPPED WITH 30mA GROUND FAULT FOR EQUIPMENT

Load Classification	Connected Load	Demand Factor	Estimated Demand	Panel Totals	
LTG	10.85	125.00%	13.56		
REC	36.96	63.53%	23.48	Total Conn. Load:	204.91 kVA
Equipment	157.10	100.00%	157.10	Total Est. Demand:	194.14 kVA
				Total Conn. Current:	246.47 A
				Total Est. Demand Current:	233.52 A

GENERAL PANEL SCHEDULE NOTES (TYPICAL ALL PANEL SCHEDULE SHEETS)

1. ALL 15 AMP AND 20 AMP CIRCUITS INDICATED IN PANEL SCHEDULES SHALL HAVE MINIMUM #12 CONDUCTORS, AND #12 GROUND, CU. UNLESS NOTED OTHERWISE. REFER TO SPECIFICATIONS.
2. REFER TO MOTOR AND CONTROL SCHEDULES ON SHEET E7.02 FOR CONDUCTOR SIZING OF ALL EQUIPMENT NOT INDICATED ON SINGLE LINE DIAGRAM AND/OR PANEL SCHEDULES.
3. REFER TO FEEDER SCHEDULE ON SHEET E6.01 FOR SIZING OF FEEDERS TO ALL PANELS AS INDICATED ON SINGLE LINE DIAGRAM AND/OR PANEL SCHEDULES.

SERVICE CALCULATION FROM NEC 220, PART III.

RECEPTACLES	@ (50% AMOUNT OVER 10KVA) + 10KVA			23.5 KVA
MOTORS	@ 100%			99.5 KVA
LIGHTS (INT.)	@ 125%			13.2 KVA
LIGHTS (EXT.)	@ 125%			0.4 KVA
HVAC	@ 100%			43.0 KVA
MISC.	@ 100%			10.2 KVA
OTHER	@ 100%			3.6 KVA
LARGEST MOTOR	@ 25%	7.5 HP	x 25% =	2.3 KVA
ADDITIONAL LIGHTING PER NEC 220.12 =	(1.0 VA/SF	x 10842 SF	= 11 KVA)	10.8 KVA
TOTAL DESIGN KVA				206 KVA
TOTAL DESIGN AMPS (DEMAND)				248 AMPS

PANELBOARD: MHN1

LOCATION:
MOUNTING: Surface
ENCL NEMA: Type 1
MIN AIC: 10,000

MAINS: MLO
VOLTS: 480/277 Wye
PHASE: 3
WIRES: 4

BUS AMPS: 125

PANEL NOTES: PROVIDE GROUND BUS
PROVIDE FULL SIZE NEUTRAL BUS UNLESS NOTED OTHERWISE

WIRE SIZE	LOAD DESCRIPTION	P	TRIP AMPS	TYPE	CKT	A		B		C		CKT	TYPE	TRIP AMPS	P	LOAD DESCRIPTION	WIRE SIZE
SEE SHEET E702	WH-1, WATER HEATER	3	20 A		1	3.00	3.90					2		20 A	1	VAV-2, VAV-3	
					3			3.00	2.10			4		20 A	1	FPU-4	
					5					3.00	4.60	6		20 A	1	FPU-5	
	FPU-6	1	20 A		7	2.20	2.00					8		20 A	1	FPU-7	
	FPU-8	1	20 A		9			3.10	3.10			10		20 A	1	FPU-9	
	FPU-10	1	20 A		11					2.40	4.70	12		20 A	1	FPU-11	
	FPU-12	1	20 A		13	4.20	5.50					14		20 A	1	FPU-20	
	FPU-21	1	20 A		15			2.70	2.40			16		20 A	1	FPU-22	
--	SPARE	1	20 A	--	17					0.00		18					
--	SPARE	1	20 A	--	19	0.00						20					
--	SPARE	1	20 A	--	21			0.00				22					
--	SPARE	1	20 A	--	23					0.00		24					
--	SPARE	1	20 A	--	25	0.00						26					
--	SPARE	1	20 A	--	27			0.00				28					
					29							30					
					31							32					
					33							34					
					35							36					
					37							38					
					39							40					
					41							42					
				TOTAL LOAD:		20.80 kVA		16.40 kVA		14.70 kVA							

BREAKER TYPE KEYS:
LO - INDICATES C.B. EQUIPPED WITH "LOCK-ON" DEVICE
GF - INDICATES C.B. IS GROUND FAULT TYPE (5mA FOR PERSONNEL)
ST - INDICATES C.B. EQUIPPED WITH SHUNT TRIP DEVICE
HT - INDICATES C.B. EQUIPPED WITH 30mA GROUND FAULT FOR EQUIPMENT

Load Classification	Connected Load	Demand Factor	Estimated Demand	Panel Totals	
Equipment	51.90	100.00%	51.90		
				Total Conn. Load:	51.90 kVA
				Total Est. Demand:	51.90 kVA
				Total Conn. Current:	62.43 A
				Total Est. Demand Current:	62.43 A

PANELBOARD: BLN1

LOCATION:
MOUNTING: Surface
ENCL NEMA: Type 1
MIN AIC: 10,000

MAINS: 150A MCB
VOLTS: 208/120 Wye
PHASE: 3
WIRES: 4

BUS AMPS: 225

PANEL NOTES: PROVIDE GROUND BUS
PROVIDE FULL SIZE NEUTRAL BUS UNLESS NOTED OTHERWISE

WIRE SIZE	LOAD DESCRIPTION	P	TRIP AMPS	TYPE	CKT	A		B		C		CKT	TYPE	TRIP AMPS	P	LOAD DESCRIPTION	WIRE SIZE
	REC OFFICE 131, 132	1	20 A		1	1.08	0.90					2		20 A	1	REC CORRIDOR C104-106	
	REC OFFICE 133, 134	1	20 A		3			1.08	0.18			4		20 A	1	REC REFRIG. ROOM 129	
	REC OFFICE 135, 138	1	20 A		5					1.26	0.18	6		20 A	1	REC COFFEE ROOM 129	
	REC SHARED OFFICE 137	1	20 A		7	0.90	0.18					8		20 A	1	REC MICROWAVE ROOM 129	
	REC OFFICE 139, 140	1	20 A		9			1.08	0.36			10		20 A	1	REC BREAK ROOM 129	
	REC OFFICE 141, 142	1	20 A		11					1.08	0.36	12		20 A	1	FLOOR REC CONFERENCE...	
	REC OFFICE 143, 144	1	20 A		13	1.08	1.20					14		20 A	1	ICE MAKER, IM-1	
	REC OFFICE 145, 146	1	20 A		15			1.08	1.20			16		20 A	1	REC COPIER RM 107	
	REC CONF. RM 130	1	20 A		17					1.26	1.80	18		20 A	1	REC PRINTER/FAX RM 107	
	REC 101, 102, EXT.	1	20 A		19	1.08	1.20					20		20 A	1	REC SHREDDER RM 107	
	PROJECTOR, CONF RM 130	1	20 A		21			0.00	0.90			22		20 A	1	REC COPY ROOM 107	
	REC FILE ROOM 136	1	20 A		23					1.08	0.00	24	--	--	--	SPACE	--
--	SPARE	1	20 A	--	25	0.00	0.00					26	--	--	--	SPACE	--
--	SPARE	1	20 A	--	27			0.00	0.00			28	--	--	--	SPACE	--
--	SPARE	1	20 A	--	29					0.00	0.00	30	--	--	--	SPACE	--
--	SPARE	1	20 A	--	31	0.00	0.00					32	--	--	--	SPACE	--
--	SPARE	1	20 A	--	33			0.00	0.00			34	--	--	--	SPACE	--
--	SPARE	1	20 A	--	35					0.00	0.00	36	--	--	--	SPACE	--
--	SPARE	1	0 A	--	37	0.00	0.00					38	--	--	--	SPACE	--
--	SPARE	1	0 A	--	39			0.00	0.00			40	--	--	--	SPACE	--
--	SPARE	1	0 A	--	41					0.00	0.00	42	--	--	--	SPACE	--
				TOTAL LOAD:		7.62 kVA		5.88 kVA		7.02 kVA							

BREAKER TYPE KEYS:
LO - INDICATES C.B. EQUIPPED WITH "LOCK-ON" DEVICE
GF - INDICATES C.B. IS GROUND FAULT TYPE (5mA FOR PERSONNEL)
ST - INDICATES C.B. EQUIPPED WITH SHUNT TRIP DEVICE
HT - INDICATES C.B. EQUIPPED WITH 30mA GROUND FAULT FOR EQUIPMENT

Load Classification	Connected Load	Demand Factor	Estimated Demand	Panel Totals	
REC	19.32	75.88%	14.66		
Equipment	1.20	100.00%	1.20	Total Conn. Load:	20.52 kVA
				Total Est. Demand:	15.86 kVA
				Total Conn. Current:	56.96 A
				Total Est. Demand Current:	44.02 A

CLIENT AND PROJECT

NORTH CAROLINA DEPARTMENT OF TRANSPORTATION

SCO ID NO.: 14-11006-01A

NEW DIVISION 8 OFFICE BUILDING
150 DOT DRIVE
CARTHAGE, NC 28327

DESIGNER

ANDRE JOHNSON ARCHITECT
PO BOX 14637
RALEIGH, NORTH CAROLINA 27620
TELEPHONE: 919.661.6935
MAIL: info@andrejohnsonarchitect.com

© 2015 Andre Johnson Architect, PLLC
Duplication or reproduction by any means without the express written consent of Andre L. Johnson, Architect is a violation of Federal and international law. The information contained on this document is the intellectual property of Andre L. Johnson, Architect and all rights thereto are Reserved. For exceptions, refer to the Owner-Architect Agreement.

CONSULTANT

RMF ENGINEERING, INC.
301 McCullough Drive, Suite 400
Charlotte, NC 28262

REGISTRATION

RMF ENGINEERING, INC. CERT. NO. C-1125 RALEIGH, N.C.

NORTH CAROLINA PROFESSIONAL SEAL 040879 ENGINEER DAVID P. FALCINELLI, JR.

Aug 5 2016

ISSUE

No.	Date	Description

SHEET INFO

ELECTRICAL PANEL SCHEDULES

E801

PROJECT NO: P1423.00
DATE: AUGUST 5, 2016
BID DOCUMENTS

PANELBOARD: SDP

LOCATION:
MOUNTING: Surface
ENCL NEMA: Type 1
MIN AIC: 22,000

MAINS: MLO
VOLTS: 480/277 Wye
PHASE: 3
WIRES: 4

BUS AMPS: 250

PANEL NOTES: PROVIDE GROUND BUS
PROVIDE FULL SIZE NEUTRAL BUS UNLESS NOTED OTHERWISE

WIRE SIZE	LOAD DESCRIPTION	P	TRIP AMPS	TYPE	CKT	A		B		C		CKT	TYPE	TRIP AMPS	P	LOAD DESCRIPTION	WIRE SIZE
					1	31.43	3.60					2					
SEE SHEET E601	MHN2	3	150 A		3			24.79	3.08			4		100 A	3	LHN1	SEE SHEET E601
					5					25.05	4.24	6					
					7	3.82	6.30					8					
SEE SHEET E702	CU-1	3	40 A		9			3.82	6.30			10		80 A	3	BLN2 (VIA BTN2)	SEE SHEET E601
					11					3.82	4.68	12					
					13	3.82						14					
SEE SHEET E702	CU-2	3	40 A		15			3.82				16					
					17					3.82		18					
					19							20					
					21							22					
					23							24					
					25							26					
					27							28					
					29							30					
				TOTAL LOAD:		48.97 kVA		41.80 kVA		41.61 kVA							

BREAKER TYPE KEYS:
LO - INDICATES C.B. EQUIPPED WITH "LOCK-ON" DEVICE
GF - INDICATES C.B. IS GROUND FAULT TYPE (5mA FOR PERSONNEL)
ST - INDICATES C.B. EQUIPPED WITH SHUNT TRIP DEVICE
HT - INDICATES C.B. EQUIPPED WITH 30mA GROUND FAULT FOR EQUIPMENT

Load Classification	Connected Load	Demand Factor	Estimated Demand	Panel Totals	
LTG	10.85	125.00%	13.56		
REC	17.64	78.34%	13.82	**Total Conn. Load:**	132.49 kVA
Equipment	104.00	100.00%	104.00	**Total Est. Demand:**	131.38 kVA
				Total Conn. Current:	159.36 A
				Total Est. Demand Current:	158.03 A

PANELBOARD: BLN2

LOCATION:
MOUNTING: Surface
ENCL NEMA: Type 1
MIN AIC: 10,000

MAINS: 150A MCB
VOLTS: 208/120 Wye
PHASE: 3
WIRES: 4

BUS AMPS: 225

PANEL NOTES: PROVIDE GROUND BUS
PROVIDE FULL SIZE NEUTRAL BUS UNLESS NOTED OTHERWISE

WIRE SIZE	LOAD DESCRIPTION	P	TRIP AMPS	TYPE	CKT	A		B		C		CKT	TYPE	TRIP AMPS	P	LOAD DESCRIPTION	WIRE SIZE
	REC ROOM 102, 103	1	20 A		1	1.26	1.26					2		20 A	1	REC CORRIDOR C101-C103	
	REC ROOM 104, 105, 106	1	20 A		3			1.26	0.18			4	LO	20 A	1	FACP, TELECOM 110	
	REC OFFICES 108, 109	1	20 A		5					1.08	0.18	6		20 A	1	SEC PANEL, TELECOM 110	
	REC WORK ROOM 111	1	20 A		7	0.36	0.00					8	--	20 A	1	SPARE	--
	REC OFFICES 112, 114	1	20 A		9			1.08	0.90			10		20 A	1	REC IT RM 124	
	REC CONF. ROOM 115	1	20 A		11					0.90	0.18	12		20 A	1	REC SERVER RM 126	
	REC Room 116, 117	1	20 A		13	1.26	0.18					14		20 A	1	REC SERVER RM 126	
	REC OFFICES 118, 119	1	20 A		15			1.08	0.54			16		20 A	1	REC SERVER RM 126	
	REC OFFICES 120, 122	1	20 A		17					1.08	0.18	18		20 A	1	REC TELECOM 110	
	REC SHARED OFFICE 121	1	20 A		19	1.44	0.54					20		20 A	1	REC TELECOM 110	
	REC Room 123, 125	1	20 A		21			1.08	0.18			22		20 A	1	REC TELECOM 110	
	REC OFFICE 127,128	1	20 A		23					1.08	0.00	24	--	--	--	SPACE	--
--	SPARE	1	20 A	--	25	0.00	0.00					26	--	--	--	SPACE	--
--	SPARE	1	20 A	--	27			0.00	0.00			28	--	--	--	SPACE	--
--	SPARE	1	20 A	--	29					0.00	0.00	30	--	--	--	SPACE	--
--	SPARE	1	20 A	--	31	0.00	0.00					32	--	--	--	SPACE	--
--	SPARE	1	20 A	--	33			0.00	0.00			34	--	--	--	SPACE	--
--	SPARE	1	20 A	--	35					0.00	0.00	36	--	--	--	SPACE	--
--	SPARE	1	20 A	--	37	0.00	0.00					38	--	--	--	SPACE	--
--	SPARE	1	20 A	--	39			0.00	0.00			40	--	--	--	SPACE	--
--	SPARE	1	20 A	--	41					0.00	0.00	42	--	--	--	SPACE	--
					TOTAL LOAD:	6.30 kVA		6.30 kVA		4.68 kVA							

BREAKER TYPE KEYS:
LO - INDICATES C.B. EQUIPPED WITH "LOCK-ON" DEVICE
GF - INDICATES C.B. IS GROUND FAULT TYPE (5mA FOR PERSONNEL)
ST - INDICATES C.B. EQUIPPED WITH SHUNT TRIP DEVICE
HT - INDICATES C.B. EQUIPPED WITH 30mA GROUND FAULT FOR EQUIPMENT

Load Classification	Connected Load	Demand Factor	Estimated Demand	Panel Totals	
REC	16.92	79.55%	13.46		
Equipment	0.36	100.00%	0.36	**Total Conn. Load:**	17.28 kVA
				Total Est. Demand:	13.82 kVA
				Total Conn. Current:	47.96 A
				Total Est. Demand Current:	38.36 A

PANELBOARD: LHN1

LOCATION:
MOUNTING: Surface
ENCL NEMA: Type 1
MIN AIC: 10,000

MAINS: MLO
VOLTS: 480/277 Wye
PHASE: 3
WIRES: 4

BUS AMPS: 125

PANEL NOTES: PROVIDE GROUND BUS
PROVIDE FULL SIZE NEUTRAL BUS UNLESS NOTED OTHERWISE

WIRE SIZE	LOAD DESCRIPTION	P	TRIP AMPS	TYPE	CKT	A		B		C		CKT	TYPE	TRIP AMPS	P	LOAD DESCRIPTION	WIRE SIZE
	LIGHTING CONTROLS	1	20 A		1	0.18	0.00					2	--	20 A	1	SPARE	--
	LTG, EXTERIOR BLDG	1	20 A		3			0.22	1.86			4		20 A	1	LTG OFFICES	
	LTG CORRIDOR	1	20 A		5					2.82	1.43	6		20 A	1	LTG ELECTRICAL 113	
	LTG OFFICES	1	20 A		7	1.92	1.50					8		20 A	1	LTG CONF/WORK/SHARED	
	LTG RR/CONF/SHARED OFF	1	20 A		9			1.04	0.00			10	--	20 A	1	SPARE	--
--	SPARE	1	20 A	--	11					0.00	0.00	12	--	20 A	1	SPARE	--
					13							14					
					15							16					
					17							18					
					19							20					
					21							22					
					23							24					
					25							26					
					27							28					
					29							30					
					31							32					
					33							34					
					35							36					
					37							38					
					39							40					
					41							42					
				TOTAL LOAD:		3.60 kVA		3.12 kVA		4.24 kVA							

BREAKER TYPE KEYS:
LO - INDICATES C.B. EQUIPPED WITH "LOCK-ON" DEVICE
GF - INDICATES C.B. IS GROUND FAULT TYPE (5mA FOR PERSONNEL)
ST - INDICATES C.B. EQUIPPED WITH SHUNT TRIP DEVICE
HT - INDICATES C.B. EQUIPPED WITH 30mA GROUND FAULT FOR EQUIPMENT

Load Classification	Connected Load	Demand Factor	Estimated Demand	Panel Totals	
LTG	10.85	125.00%	13.56		
Equipment	0.18	100.00%	0.18	**Total Conn. Load:**	11.03 kVA
				Total Est. Demand:	13.74 kVA
				Total Conn. Current:	13.27 A
				Total Est. Demand Current:	16.53 A

CLIENT AND PROJECT

NORTH CAROLINA DEPARTMENT OF TRANSPORTATION

SCO ID NO.: 14-11006-01A

NEW DIVISION 8 OFFICE BUILDING

150 DOT DRIVE
CARTHAGE, NC 28327

DESIGNER

ANDRE JOHNSON ARCHITECT
PO BOX 14637
RALEIGH, NORTH CAROLINA 27620
TELEPHONE: 919.661.6935
MAIL: info@andrejohnsonarchitect.com

© 2015 Andre Johnson Architect, PLLC
Duplication or reproduction by any means without the express written consent of Andre L. Johnson, Architect is a violation of Federal and international law. The information contained on this document is the intellectual property of Andre L. Johnson, Architect and all rights thereto are Reserved. For exceptions, refer to the Owner-Architect Agreement.

CONSULTANT

RMF ENGINEERING, INC.
301 McCullough Drive, Suite 400
Charlotte, NC 28262

REGISTRATION

RMF ENGINEERING, INC. CERT. NO. C-1125 RALEIGH, N.C.

NORTH CAROLINA PROFESSIONAL SEAL 040879 ENGINEER DAVID P. FALCINELLI, JR.

Aug 5 2016

ISSUE

No.	Date	Description

SHEET INFO

ELECTRICAL PANEL SCHEDULES

E802

PROJECT NO: P1423.00
DATE: AUGUST 5, 2016
BID DOCUMENTS

PANELBOARD: MHN2

LOCATION:
MOUNTING: Surface
ENCL NEMA: Type 1
MIN AIC: 10,000

MAINS: MLO
VOLTS: 480/277 Wye
PHASE: 3
WIRES: 4

BUS AMPS: 250

PANEL NOTES: PROVIDE GROUND BUS
PROVIDE FULL SIZE NEUTRAL BUS UNLESS NOTED OTHERWISE

WIRE SIZE	LOAD DESCRIPTION	P	TRIP AMPS	TYPE	CKT	A		B		C		CKT	TYPE	TRIP AMPS	P	LOAD DESCRIPTION	WIRE SIZE
SEE SHEET E601	MLN1 (VIA MTN1)	3	50 A		1	5.09	2.90					2		20 A	1	FPU-1	
					3			4.38	2.50			4		20 A	1	FPU-2	
					5					4.31	4.40	6		20 A	1	FPU-3	
SEE SHEET E702	HC-1	3	20 A		7	3.70	5.20					8		20 A	1	FPU-13	
					9			3.70	3.10			10		20 A	1	FPU-14	
					11					3.70	2.70	12		20 A	1	FPU-15	
SEE SHEET E702	SF-1	3	25 A		13	3.05	4.90					14		20 A	1	FPU-16	
					15			3.05	2.50			16		20 A	1	FPU-17	
					17					3.05	2.90	18		20 A	1	FPU-18	
SEE SHEET E702	SF-2	3	25 A		19	3.05	2.60					20		20 A	1	FPU-19	
					21			3.05	1.57			22		20 A	1	VAV-1	
					23					3.05	0.00	24	--	20 A	1	SPARE	--
SEE SHEET E702	RF-1	3	15 A		25	0.94	0.00					26	--	20 A	1	SPARE	--
					27			0.94	0.00			28	--	20 A	1	SPARE	--
					29					0.94	0.00	30	--	20 A	1	SPARE	--
					31							32					
					33							34					
					35							36					
					37							38					
					39							40					
					41							42					
				TOTAL LOAD:		31.43 kVA		24.79 kVA		25.05 kVA							

BREAKER TYPE KEYS:

LO - INDICATES C.B. EQUIPPED WITH "LOCK-ON" DEVICE
GF - INDICATES C.B. IS GROUND FAULT TYPE (5mA FOR PERSONNEL)
ST - INDICATES C.B. EQUIPPED WITH SHUNT TRIP DEVICE
HT - INDICATES C.B. EQUIPPED WITH 30mA GROUND FAULT FOR EQUIPMENT

Load Classification	Connected Load	Demand Factor	Estimated Demand	Panel Totals	
REC	0.72	100.00%	0.72		
Equipment	80.54	100.00%	80.54	**Total Conn. Load:**	81.26 kVA
				Total Est. Demand:	81.26 kVA
				Total Conn. Current:	97.74 A
				Total Est. Demand Current:	97.74 A

PANELBOARD: MLN1

LOCATION:
MOUNTING: Surface
ENCL NEMA: Type 1
MIN AIC: 10,000

MAINS: 100A MCB
VOLTS: 208/120 Wye
PHASE: 3
WIRES: 4

BUS AMPS: 100

PANEL NOTES: PROVIDE GROUND BUS
PROVIDE FULL SIZE NEUTRAL BUS UNLESS NOTED OTHERWISE

WIRE SIZE	LOAD DESCRIPTION	P	TRIP AMPS	TYPE	CKT	A		B		C		CKT	TYPE	TRIP AMPS	P	LOAD DESCRIPTION	WIRE SIZE
	AHU-1 CONTROLS	1	20 A		1	0.60	0.36					2		20 A	1	REC MECHANICAL ROOM...	
	DDCP, MECH. RM 147	1	20 A		3			0.60	0.18			4		20 A	1	REC ELECTRICAL RM 113	
	REC, ROOF	1	20 A	GF	5					0.18	0.60	6	GF	20 A	1	EWC	
SEE SHEET E702	OU-1	2	20 A		7	1.50	0.60					8		20 A	1	EQ TOILET 105	
					9			1.50	0.60			10		20 A	1	EQ TOILET 104	
SEE SHEET E702	OU-2	2	20 A		11					1.50	0.53	12		20 A	1	RP-1	
					13	1.50	0.53					14		15 A	1	EF-1	
SEE SHEET E702	OU-3	2	20 A		15			1.50	0.00			16	--	20 A	1	SPARE	--
					17					1.50	0.00	18	--	20 A	1	SPARE	--
					19		0.00					20	--	20 A	1	SPARE	--
					21				0.00			22	--	20 A	1	SPARE	--
					23						0.00	24	--	20 A	1	SPARE	--
					25							26					
					27							28					
					29							30					
					31							32					
					33							34					
					35							36					
					37							38					
					39							40					
					41							42					
				TOTAL LOAD:		5.09 kVA		4.38 kVA		4.31 kVA							

BREAKER TYPE KEYS:

LO - INDICATES C.B. EQUIPPED WITH "LOCK-ON" DEVICE
GF - INDICATES C.B. IS GROUND FAULT TYPE (5mA FOR PERSONNEL)
ST - INDICATES C.B. EQUIPPED WITH SHUNT TRIP DEVICE
HT - INDICATES C.B. EQUIPPED WITH 30mA GROUND FAULT FOR EQUIPMENT

Load Classification	Connected Load	Demand Factor	Estimated Demand	Panel Totals	
REC	0.72	100.00%	0.72		
Equipment	13.06	100.00%	13.06	**Total Conn. Load:**	13.78 kVA
				Total Est. Demand:	13.78 kVA
				Total Conn. Current:	38.25 A
				Total Est. Demand Current:	38.25 A

CLIENT AND PROJECT

STATE OF NORTH CAROLINA DEPARTMENT OF TRANSPORTATION

NORTH CAROLINA DEPARTMENT OF TRANSPORTATION

SCO ID NO.: 14-11006-01A

NEW DIVISION 8 OFFICE BUILDING

150 DOT DRIVE
CARTHAGE, NC 28327

DESIGNER

ANDRE JOHNSON ARCHITECT

PO BOX 14637
RALEIGH, NORTH CAROLINA 27620
TELEPHONE: 919.661.6935
MAIL: info@andrejohnsonarchitect.com

© 2015 Andre Johnson Architect, PLLC
Duplication or reproduction by any means without the express written consent of Andre L. Johnson, Architect is a violation of Federal and international law. The information contained on this document is the intellectual property of Andre L. Johnson, Architect and all rights thereto are Reserved. For exceptions, refer to the Owner-Architect Agreement.

CONSULTANT

RMF ENGINEERING, INC.
301 McCullough Drive, Suite 400
Charlotte, NC 28262

REGISTRATION

RMF ENGINEERING, INC. P.A. CERT. NO. C-1125 ENGINEERING RALEIGH, N.C.

NORTH CAROLINA PROFESSIONAL SEAL 040879 ENGINEER DAVID P. FALCINELLI, JR.

Aug 5 2016

ISSUE

No.	Date	Description

SHEET INFO

ELECTRICAL PANEL SCHEDULES

E803

PROJECT NO: P1423.00
DATE: AUGUST 5, 2016
BID DOCUMENTS