TIP PROJECT: 17BP.8.R.41

CONTRACT:

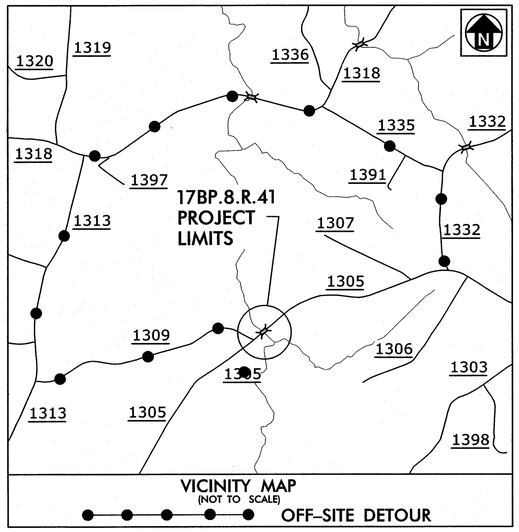

STATE OF NORTH CAROLINA
DIVISION OF HIGHWAYS

LEE COUNTY

STATE	STATE PROJECT REFERENCE NO.	SHEET NO.	TOTAL SHEETS
N.C.	17BP.8.R.41	1	

STATE PROJECT NO.	F. A. PROJ. NO.	DESCRIPTION
17BP.8.R.41		P.E., CONST.

LOCATION: BRIDGE NO.50 OVER POCKET CREEK ON SR 1305 (HENLEY ROAD)

TYPE OF WORK: GRADING, PAVING, DRAINAGE AND STRUCTURE

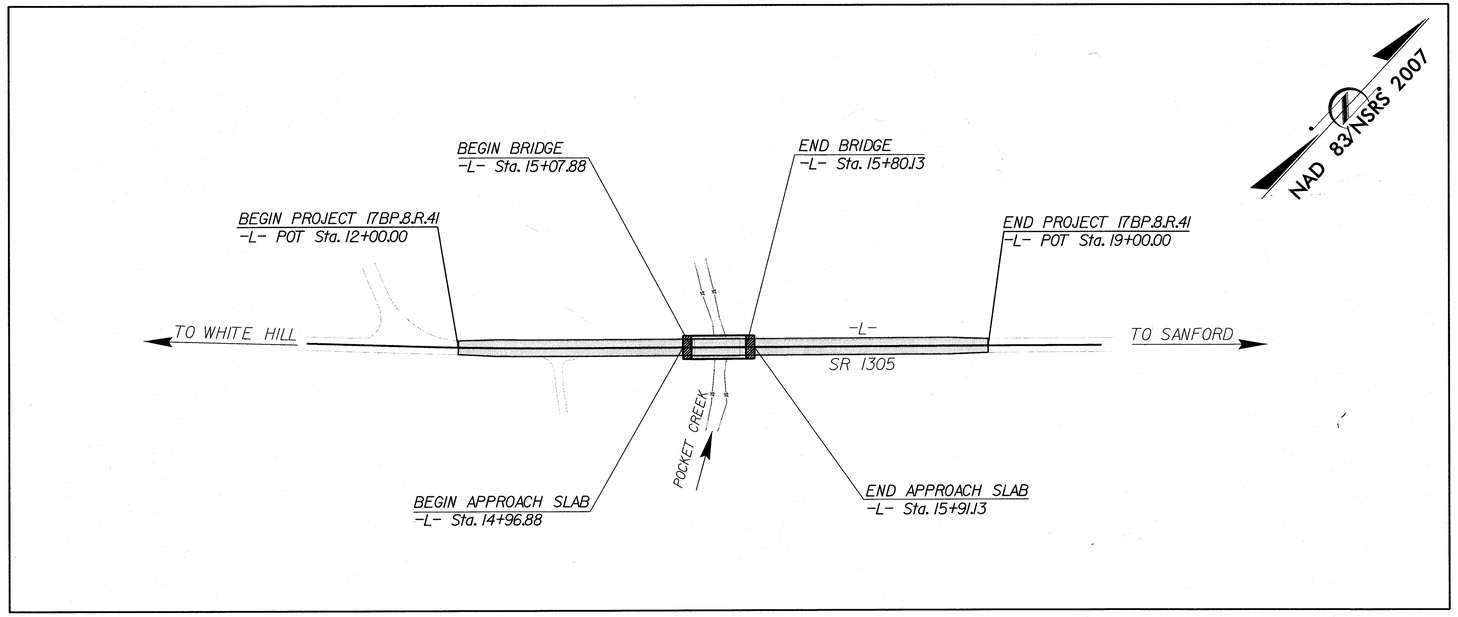

*DESIGN EXCEPTION:
SUPERELEVATION

STATE OF NORTH CAROLINA DEPARTMENT OF TRANSPORTATION

DESIGN DATA

ADT 2008 = 1700

V = 55 MPH

PROJECT LENGTH

LENGTH ROADWAY TIP PROJECT	=	0.119 MILES
LENGTH STRUCTURE TIP PROJECT	=	0.014 MILES
TOTAL LENGTH TIP PROJECT	=	0.133 MILES

Prepared In the Office of Hatch Mott MacDonald for

DIVISION 8

NORTH CAROLINA DEPARTMENT OF TRANSPORTATION

2012 STANDARD SPECIFICATIONS

LETTING DATE:

TIM JORDAN, PE
PROJECT ENGINEER

HENRY WELLS, PE
HYDRAULICS ENGINEER

NCDOT CONTACT: TIM WELCH, PE
DIVISION BRIDGE PROGRAM MANAGER

ROADWAY DESIGN ENGINEER

NORTH CAROLINA PROFESSIONAL SEAL 21102 ENGINEER JAMES TIMOTHY JORDAN

10/16/12 P.E.

SIGNATURE:

HYDRAULICS ENGINEER

NORTH CAROLINA PROFESSIONAL SEAL 26971 ENGINEER JOSHUA G. DALTON

10/16/12 P.E.

SIGNATURE:

PLANS PREPARED BY:

Hatch Mott MacDonald
PO Box 700
Fuquay-Varina, NC 27526
(919) 552-2253
(919) 552-2254 (Fax)
www.hatchmott.com
LICENSE NO. F-0669

SUNGATE DESIGN GROUP, P.A.
915 JONES FRANKLIN ROAD
RALEIGH, NORTH CAROLINA 27606
TEL (919) 859-2243 FAX (919) 859-6258
ENG FIRM LICENSE NO. C-890

10/16/2012
3:45:21 PM
R:\Roadway\Proj\Lee_50_rdy_tsh.dgn
dav56859

PROJECT REFERENCE	SHEET NO.
17BP.8.R.41 LEE #50	1-A

ROADWAY DESIGN ENGINEER

NORTH CAROLINA PROFESSIONAL SEAL 21108 ENGINEER TIMOTHY JORDAN

8/21/13

HATCH MOTT MACDONALD I & E, LLC
LICENSE NO. F-0669

Prepared in the Office of: Hatch Mott MacDonald
PO Box 700
Fuquay-Varina, NC 27526
www.hatchmott.com

GENERAL NOTES:

2012 SPECIFICATIONS
EFFECTIVE: 01-17-2012
REVISED: 07-30-2012

GRADE LINE:
GRADING AND SURFACING:

THE GRADE LINES SHOWN DENOTE THE FINISHED ELEVATION OF THE PROPOSED SURFACING AT GRADE POINTS SHOWN ON THE TYPICAL SECTIONS. GRADE LINES MAY BE ADJUSTED AT THEIR BEGINNING AND ENDING AND AT STRUCTURES AS DIRECTED BY THE ENGINEER IN ORDER TO SECURE A PROPER TIE-IN.

CLEARING:

CLEARING ON THIS PROJECT SHALL BE PERFORMED TO THE LIMITS ESTABLISHED BY METHOD III.

SUPERELEVATION:

ALL CURVES ON THIS PROJECT SHALL BE SUPERELEVATED IN ACCORDANCE WITH STD. NO. 225.04 USING THE RATE OF SUPERELEVATION AND RUNOFF SHOWN ON THE PLANS. SUPERELEVATION IS TO BE REVOLVED ABOUT THE GRADE POINTS SHOWN ON THE TYPICAL SECTIONS.

SHOULDER CONSTRUCTION:

ASPHALT, EARTH, AND CONCRETE SHOULDER CONSTRUCTION ON THE HIGH SIDE OF SUPERELEVATED CURVES SHALL BE IN ACCORDANCE WITH STD. NO. 560.01.

GUARDRAIL:

THE GUARDRAIL LOCATIONS SHOWN ON THE PLANS MAY BE ADJUSTED DURING CONSTRUCTION AS DIRECTED BY THE ENGINEER. THE CONTRACTOR SHOULD CONSULT WITH THE ENGINEER PRIOR TO ORDERING GUARDRAIL MATERIAL.

SUBSURFACE PLANS:

NO SUBSURFACE PLANS ARE AVAILABLE ON THIS PROJECT. THE CONTRACTOR SHOULD MAKE HIS OWN INVESTIGATION AS TO THE SUBSURFACE CONDITIONS.

END BENTS:

THE ENGINEER SHALL CHECK THE STRUCTURE END BENT PLANS, DETAILS, AND CROSS-SECTION PRIOR TO SETTING OF THE SLOPE STAKES FOR THE EMBANKMENT OR EXCAVATION APPROACHING A BRIDGE.

UTILITIES:

UTILITY OWNERS ON THIS PROJECT ARE PROGRESS ENERGY, WINDSTREAM COMMUNICATIONS, CHARTER COMMUNICATIONS, AND SANFORD WATER.

ANY RELOCATION OF EXISTING UTILITIES WILL BE ACCOMPLISHED BY OTHERS.

INDEX OF SHEETS

SHEET NUMBER	DESCRIPTION
1	TITLE SHEET
1-A	INDEX OF SHEETS, GENERAL NOTES, AND LIST OF STANDARD DRAWINGS
1-B	CONVENTIONAL SYMBOLS
2	PAVEMENT SCHEDULE AND TYPICAL SECTIONS
3	GUARDRAIL, DRAINAGE & EARTHWORK SUMMARIES
4	PLAN SHEET AND PROFILE SHEET
TCP-1 THRU TCP-2	TRAFFIC CONTROL PLANS
EC-1 THRU EC-5	EROSION CONTROL PLANS
UC-1 THRU UC-4	UTILITY CONSTRUCTION PLAN
UO-1 THRU UO-2	UTILITIES BY OTHERS PLAN
X-1 THRU X-4	CROSS-SECTIONS
S-1 THRU S-16	STRUCTURE PLANS

EFF. 01-17-2012
REV. 10-30-2012

2012 ROADWAY ENGLISH STANDARD DRAWINGS

The following Roadway Standards as appear in "Roadway Standard Drawings" Highway Design Branch - N. C. Department of Transportation - Raleigh, N. C., Dated January, 2012 are applicable to this project and by reference hereby are considered a part of these plans:

STD.NO.	TITLE
DIVISION 2 - EARTHWORK	
200.03	Method of Clearing - Method III
225.02	Guide for Grading Subgrade - Secondary and Local
225.04	Method of Obtaining Superelevation - Two Lane Pavement
DIVISION 3 - PIPE CULVERTS	
300.01	Method of Pipe Installation
DIVISION 4 - MAJOR STRUCTURES	
422.11	Reinforced Bridge Approach Fills - Sub Regional Tier
DIVISION 5 - SUBGRADE, BASES AND SHOULDERS	
560.01	Method of Shoulder Construction - High Side of Superelevated Curve - Method I
DIVISION 6 - ASPHALT BASES AND PAVEMENTS	
654.01	Pavement Repairs
DIVISION 8 - INCIDENTALS	
840.00	Concrete Base Pad for Drainage Structures
840.25	Anchorage for Frames - Brick or Concrete or Precast
840.29	Frames and Narrow Slot Flat Grates
840.35	Traffic Bearing Grated Drop Inlet - for Cast Iron Double Frame and Grates
840.46	Traffic Bearing Precast Drainage Structure
840.66	Drainage Structure Steps
846.01	Concrete Curb, Gutter and Curb & Gutter
846.04	Drop Inlet Installation in Shoulder Berm Gutter
862.01	Guardrail Placement
862.02	Guardrail Installation
862.03	Structure Anchor Units
876.02	Guide for Rip Rap at Pipe Outlets

dav56853
i:\roadway\proj\Lee_50_rdy_pshls.dgn
8/20/2013 12:27:55 PM

PROJECT REFERENCE	SHEET NO.
17BP.8.R.41 LEE #50	1-B

Note: Not to Scale

****S.U.E. = Subsurface Utility Engineering***

STATE OF NORTH CAROLINA
DIVISION OF HIGHWAYS

CONVENTIONAL PLAN SHEET SYMBOLS

BOUNDARIES AND PROPERTY:

- State Line
- County Line
- Township Line
- City Line
- Reservation Line
- Property Line
- Existing Iron Pin — EIP
- Property Corner
- Property Monument — ECM
- Parcel/Sequence Number — 123
- Existing Fence Line
- Proposed Woven Wire Fence
- Proposed Chain Link Fence
- Proposed Barbed Wire Fence
- Existing Wetland Boundary — WLB
- Proposed Wetland Boundary — WLB
- Existing Endangered Animal Boundary — EAB
- Existing Endangered Plant Boundary — EPB

BUILDINGS AND OTHER CULTURE:

- Gas Pump Vent or U/G Tank Cap
- Sign — S
- Well — W
- Small Mine
- Foundation
- Area Outline
- Cemetery
- Building
- School
- Church
- Dam

HYDROLOGY:

- Stream or Body of Water
- Hydro, Pool or Reservoir
- Jurisdictional Stream — JS
- Buffer Zone 1 — BZ 1
- Buffer Zone 2 — BZ 2
- Flow Arrow
- Disappearing Stream
- Spring
- Wetland
- Proposed Lateral, Tail, Head Ditch — FLOW
- False Sump

RAILROADS:

- Standard Gauge — CSX TRANSPORTATION
- RR Signal Milepost — MILEPOST 35
- Switch — SWITCH
- RR Abandoned
- RR Dismantled

RIGHT OF WAY:

- Baseline Control Point
- Existing Right of Way Marker
- Existing Right of Way Line
- Proposed Right of Way Line — RW
- Proposed Right of Way Line with Iron Pin and Cap Marker — RW
- Proposed Right of Way Line with Concrete or Granite Marker — RW
- Existing Control of Access — CA
- Proposed Control of Access — CA
- Existing Easement Line — E
- Proposed Temporary Construction Easement — E
- Proposed Temporary Drainage Easement — TDE
- Proposed Permanent Drainage Easement — PDE
- Proposed Permanent Utility Easement — PUE

ROADS AND RELATED FEATURES:

- Existing Edge of Pavement
- Existing Curb
- Proposed Slope Stakes Cut — C
- Proposed Slope Stakes Fill — F
- Proposed Wheel Chair Ramp — WCR
- Existing Metal Guardrail
- Proposed Guardrail
- Existing Cable Guiderail
- Proposed Cable Guiderail
- Equality Symbol
- Pavement Removal

VEGETATION:

- Single Tree
- Single Shrub
- Hedge
- Woods Line
- Orchard
- Vineyard — Vineyard

EXISTING STRUCTURES:

MAJOR:

- Bridge, Tunnel or Box Culvert — CONC
- Bridge Wing Wall, Head Wall and End Wall — CONC WW

MINOR:

- Head and End Wall — CONC HW
- Pipe Culvert
- Footbridge
- Drainage Box: Catch Basin, DI or JB — CB
- Paved Ditch Gutter
- Storm Sewer Manhole — S
- Storm Sewer — S

UTILITIES:

POWER:

- Existing Power Pole
- Proposed Power Pole
- Existing Joint Use Pole
- Proposed Joint Use Pole
- Power Manhole — P
- Power Line Tower
- Power Transformer
- U/G Power Cable Hand Hole — HH
- H-Frame Pole
- Recorded U/G Power Line — P
- Designated U/G Power Line (S.U.E.*) — P

TELEPHONE:

- Existing Telephone Pole
- Proposed Telephone Pole
- Telephone Manhole — T
- Telephone Booth — 3
- Telephone Pedestal — T
- Telephone Cell Tower
- U/G Telephone Cable Hand Hole — HH
- Recorded U/G Telephone Cable — T
- Designated U/G Telephone Cable (S.U.E.*) — T
- Recorded U/G Telephone Conduit — TC
- Designated U/G Telephone Conduit (S.U.E.*) — TC
- Recorded U/G Fiber Optics Cable — T FO
- Designated U/G Fiber Optics Cable (S.U.E.*) — T FO

WATER:

- Water Manhole — W
- Water Meter
- Water Valve
- Water Hydrant
- Recorded U/G Water Line — W
- Designated U/G Water Line (S.U.E.*) — W
- Above Ground Water Line — A/G Water

TV:

- TV Satellite Dish
- TV Pedestal — C
- TV Tower
- U/G TV Cable Hand Hole — HH
- Recorded U/G TV Cable — TV
- Designated U/G TV Cable (S.U.E.*) — TV
- Recorded U/G Fiber Optic Cable — TV FO
- Designated U/G Fiber Optic Cable (S.U.E.*) — TV FO

GAS:

- Gas Valve
- Gas Meter
- Recorded U/G Gas Line — G
- Designated U/G Gas Line (S.U.E.*) — G
- Above Ground Gas Line — A/G Gas

SANITARY SEWER:

- Sanitary Sewer Manhole
- Sanitary Sewer Cleanout
- U/G Sanitary Sewer Line — SS
- Above Ground Sanitary Sewer — A/G Sanitary Sewer
- Recorded SS Forced Main Line — FSS
- Designated SS Forced Main Line (S.U.E.*) — FSS

MISCELLANEOUS:

- Utility Pole
- Utility Pole with Base
- Utility Located Object
- Utility Traffic Signal Box — S
- Utility Unknown U/G Line — ?UTL
- U/G Tank; Water, Gas, Oil
- A/G Tank; Water, Gas, Oil
- U/G Test Hole (S.U.E.*)
- Abandoned According to Utility Records — AATUR
- End of Information — E.O.I.

dw:56859
r:\roadway\proj\Lee_50_rdy_pshlb.dgn
10/16/2012
3:15:34 PM

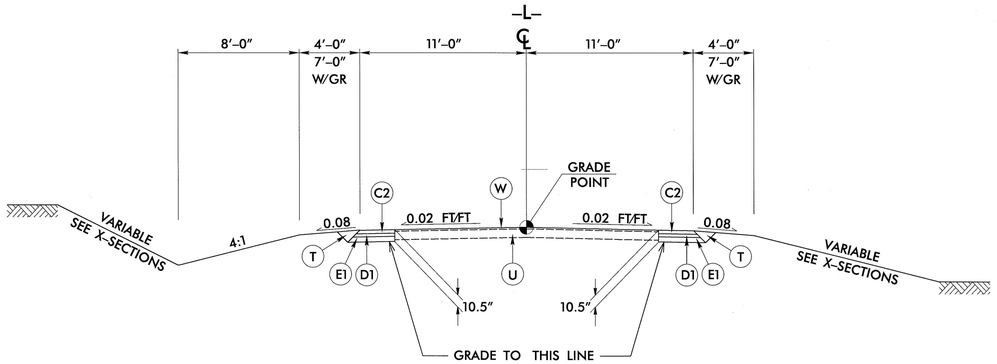

TYPICAL SECTION NO. 1

TRANSITION FROM EXISTING TO TYPICAL SECTION NO. 1:

–L– STA 12+00.00 TO 12+50.00

USE TYPICAL SECTION NO. 1:

–L– STA 12+50.00 TO 15+07.88 (BEGIN BRIDGE)
–L– STA 15+80.13 (END BRIDGE) TO 16+45.00
–L– STA 18+25.00 TO 18+50.00

TRANSITION FROM TYPICAL SECTION NO. 1 TO EXISTING:

–L– STA 18+50.00 TO 19+00.00

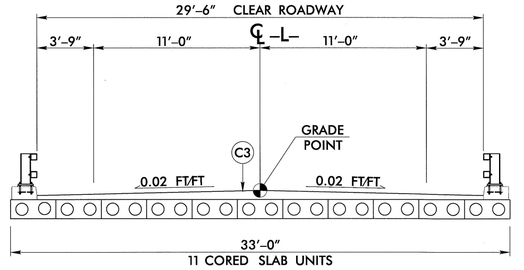

TYPICAL SECTION NO. 3

USE TYPICAL SECTION NO. 3:

–L– STA 15+07.88 (BEGIN BRIDGE) TO 15+80.13 (END BRIDGE)

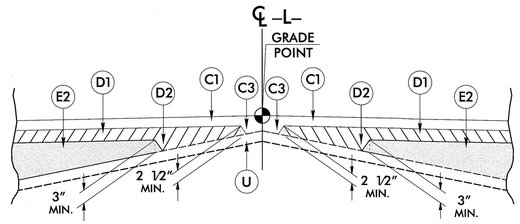

Detail Showing Method of Wedging

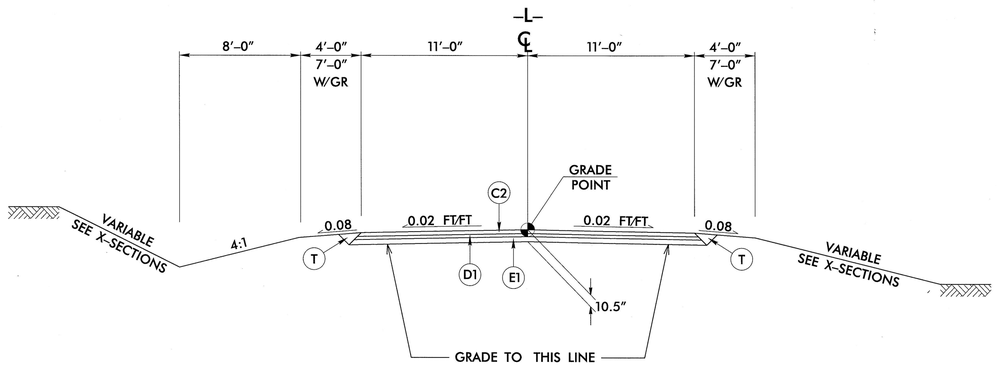

TYPICAL SECTION NO. 2

USE TYPICAL SECTION NO. 2:

–L– STA 16+45.00 TO 18+25.00

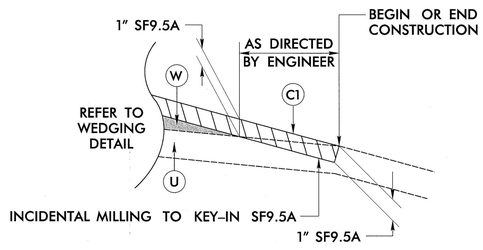

V: DETAIL SHOWING MILLED BUTT JOINT

DETAIL SHOWING PROFILE VIEW

PAVEMENT SCHEDULE	
C1	PROP. APPROX. 1″ ASPHALT CONCRETE SURFACE COURSE, TYPE SF9.5A, AT AN AVERAGE RATE OF 110 LBS. PER SQ. YD.
C2	PROP. APPROX. 2″ ASPHALT CONCRETE SURFACE COURSE, TYPE SF9.5A, AT AN AVERAGE RATE OF 110 LBS. PER SQ. YD. IN EACH OF TWO LAYERS.
C3	PROP. VAR. DEPTH ASPHALT CONCRETE SURFACE COURSE, TYPE SF9.5A, AT AN AVERAGE RATE OF 110 LBS. PER SQ. YD. PER 1″ DEPTH. TO BE PLACED IN LAYERS NOT LESS THAN 1″ IN DEPTH OR GREATER THAN 1½″ IN DEPTH.
D1	PROP. APPROX. 3″ ASPHALT CONCRETE INTERMEDIATE COURSE, TYPE I19.0B, AT AN AVERAGE RATE OF 342 LBS. PER SQ. YD.
D2	PROP. VAR. DEPTH ASPHALT CONCRETE BINDER COURSE. TYPE I19.0B, AT AN AVERAGE RATE OF 114 LBS. PER SQ. YD. PER 1″ DEPTH, TO BE PLACED IN LAYERS NOT LESS THAN 2½″ IN DEPTH OR GREATER THAN 4″ IN DEPTH.
E1	PROP. APPROX. 5½″ ASPHALT CONCRETE BASE COURSE, TYPE B25.0B, AT AN AVERAGE RATE OF 627 LBS. PER SQ. YD.
E2	PROP. VAR. DEPTH ASPHALT CONCRETE BASE COURSE, TYPE B25.0B, AT AN AVERAGE RATE OF 114 LBS. PER SQ. YD. PER 1″ DEPTH TO BE PLACED IN LAYERS NOT LESS THAN 3″ IN DEPTH OR GREATER THAN 5½″ IN DEPTH.
T	EARTH MATERIAL.
U	EXISTING PAVEMENT.
V	MILLING BITUMINOUS PAVEMENT.
W	WEDGING (SEE DETAIL SHOWING METHOD OF WEDGING).

NOTE: 1) FOR VARIABLE SLOPES SEE CROSS SECTIONS.
2) SEE PLANS FOR TAPERS.
3) PAVE TO GUARDRAIL USING FULL DEPTH PAVEMENT (SEE SHEET 4 SHADED AREA).
4) PAVEMENT EDGE SLOPES ARE 1:1 UNLESS SHOWN OTHERWISE.

PROJECT REFERENCE	SHEET NO.
17BP.8.R.41 LEE #50	2

ROADWAY DESIGN ENGINEER

NORTH CAROLINA PROFESSIONAL SEAL 21102 ENGINEER TIMOTHY J. KEY
10/1/13

HATCH MOTT MACDONALD I & E, LLC
LICENSE NO. F-0669

Prepared in the Office of: Hatch Mott MacDonald PO Box 700 Fuquay-Varina, NC 27526 www.hatchmott.com

dav56859
R:\Roadway\Proj\Lee_50_rdy_typ.dgn
10/1/2013 3:08:58 PM

PROJECT REFERENCE	SHEET NO.
17BP.8.R.41 LEE #50	3

GUARDRAIL SUMMARY

G = GATING IMPACT ATTENUATOR TYPE 350
NG = NON-GATING IMPACT ATTENUATOR TYPE 350

SURVEY LINE	BEG. STA.	END STA.	LOCATION	LENGTH: STRAIGHT	LENGTH: SHOP CURVED	LENGTH: DOUBLE FACED	WARRANT POINT: APPROACH END	WARRANT POINT: TRAILING END	ANCHORS: AT-1	ANCHORS: GRAU 350	ANCHORS: TYPE III							IMPACT ATTENUATOR TYPE 350: NO.	PERMITTED: G	PERMITTED: NG				REMARKS
-L-	14+26.63 +/-	15+07.88 +/-	RT	81.25'						1	1													
-L-	14+26.63 +/-	15+07.88 +/-	LT	81.25'						1	1													
-L-	15+80.13 +/-	16+08.00 +/-	RT		18.75'				1		1													
-L-	15+80.13 +/-	16+61.38 +/-	LT	81.25'						1	1													BREAK FOR DRIVE
		SUBTOTAL		243.75'	18.75'																			
		LESS ANCHOR DEDUCTIONS																						
		GRAU-350	3 x 50' =	-150'																				
		TYPE III	3 x 18.75' =	-56.25'																				
		TYPE AT-1	1 x 6.25' =		-6.25'																			
		TOTAL		37.50'	12.50'				1	3	4													

SUB-REGIONAL & REGIONAL LIST OF PIPES, ENDWALLS, ETC. (FOR PIPES 48" & UNDER)

STATION	LOCATION (LT,RT, OR CL)	STRUCTURE NO. FROM	STRUCTURE NO. TO	TOP ELEVATION	INVERT ELEVATION	INVERT ELEVATION	SLOPE CRITICAL	DRAINAGE PIPE (RCP, CSP, CAAP, HDPE, or PVC) 12"	15"	18"	24"	30"	36"	42"	48"	DO NOT USE RCP	DO NOT USE CSP	DO NOT USE CAAP	DO NOT USE HDPE	C.S. PIPE 12" (.064)	15" (.064)	18" (.064)	24" (.064)	36" (.079)	42" (.109)	48" (.109)
15+95 +/-	LT	401	402	306.7	303.9	303.8																				
15+95 +/-	RT	402	403	306.7	303.8	303.5																				
16+74 +/-	RT	403	404	306.5	303.5	302.3																				
18+25 +/-	RT	404		306.9	301.6																					
TOTAL																										

STATION	R.C. PIPE (CLASS III) 15"	18"	24"	30"	36"	42"	48"	R.C. PIPE (CLASS IV) 12"	15"	18"	24"	30"	36"	42"	48"	**" R. C. PIPE (CLASS V)	**" R. C. PIPE CULVERTS, CONTRACTOR DESIGN PIPE	**" R. C. PIPE CULVERTS, CONTRACTOR DESIGN PIPE	15" SIDE DRAIN PIPE	18" SIDE DRAIN PIPE
15+95 +/-									32'											
15+95 +/-									80'											
16+74 +/-									152'											
18+25 +/-																				
TOTAL									264'											

STATION	ENDWALLS STD. 838.01, STD. 838.11 OR STD. 838.80 (UNLESS NOTED OTHERWISE) CU. YDS. R.C.P.	C.S.P.	QUANTITIES FOR DRAINAGE STRUCTURES PER EACH (0' THRU 5.0')	* TOTAL L.F. FOR PAY QUANTITY SHALL BE COL. 'A' + (1.3 X COL.'B') LIN. *FT. A 5.0' THRU 10.0'	B 10.0' AND ABOVE	C.B. STD. 840.01 OR STD. 840.02	FRAME, GRATES AND HOOD STANDARD 840.03 TYPE OF GRATE E	F	G		CONCRETE TRANSITIONAL SECTION CATCH BASIN	DROP INLET	G.D.I. FRAME WITH GRATE STD. 840.22	G.D.I. FRAME WITH TWO GRATES STD. 840.22	G.D.I. (N.S.) FRAME WITH GRATE STD. 840.24	G.D.I. (N.S.) FRAME WITH TWO GRATES STD. 840.24	G.D.I. (N.S.) FRAME WITH TWO GRATES STD. 840.29	T.B.D.I. STD. 840.35	CORR. STEEL ELBOWS NO. & SIZE	CONC. COLLARS CL. "B" C.Y. STD 840.72	CONC. & BRICK PIPE PLUG, C.Y. STD. 840.71	PIPE REMOVAL LIN.FT.	REMARKS
15+95 +/-			1														1	1					
15+95 +/-			1														1	1					
16+74 +/-			1														1	1					
18+25 +/-			1	0.3													1	1					
TOTAL			4	0.3													4	4					

ABBREVIATIONS

C.B. CATCH BASIN
N.D.I. NARROW DROP INLET
D.I. DROP INLET
G.D.I. GRATED DROP INLET
G.D.I. (N.S.) GRATED DROP INLET (NARROW SLOT)
J.B. JUNCTION BOX
M.H. MANHOLE
T.B.D.I. TRAFFIC BEARING DROP INLET
T.B.J.B. TRAFFIC BEARING JUNCTION BOX

NOTE: Invert Elevations are for Bid Purposes only and shall not be used for project construction stakeout.
See "Standard Specifications For Roads and Structures, Section 300-5".

SUMMARY OF EARTHWORK

IN CUBIC YARDS

LOCATION	UNCLASSIFIED EXCAVATION	UNDERCUT	EMBT+%	BORROW	WASTE
-L- 12+00.00 TO 15+07.88 (BEGIN BRIDGE)	20		78	58	0
-L- 15+80.13 (END BRIDGE) TO 19+00.00	231		38	0	193
TOTAL	251		116	58	193
WASTE TO REPLACE BORROW				-58	-58
PROJECT TOTAL	251		116	0	135
5% TO REPLACE BORROW				0	
GRAND TOTAL	251		116	0	135
SAY	265			0	

NOTE: Approximate quantities only. Unclassified Excavation, Borrow Excavation, Fine Grading, Clearing and Grubbing and Removal of Existing Asphalt Pavement will be paid for at the contract Lump Sum price for "Grading".

dav56859
r:\roadway\Proj\Lee-50_rdy_psh3.dgn
8/20/2013 12:30:22 PM

*DESIGN EXCEPTION:
SUPERELEVATION

PROJECT REFERENCE	SHEET NO.
17BP.8.R.41 LEE #50	4

ROADWAY DESIGN ENGINEER
NORTH CAROLINA PROFESSIONAL SEAL 21102 ENGINEER JAMES TROTHY JORDAN
3/21/13
HATCH MOTT MACDONALD I & E, LLC
LICENSE NO. F-0669

HYDRAULICS ENGINEER
NORTH CAROLINA PROFESSIONAL SEAL 26971 ENGINEER JOSHUA G. DALTON
3/21/13

Prepared in the Office of:
Hatch Mott MacDonald
PO Box 700
Fuquay-Varina, NC 27526
www.hatchmott.com

SUNGATE DESIGN GROUP, P.A.
915 JONES FRANKLIN ROAD
RALEIGH, NORTH CAROLINA 27606
TEL (919) 859-2243 FAX (919) 859-2258
ENG FIRM LICENSE NO. C-690

VERTICAL SCALE 5' 0 5' 10'
HORIZONTAL SCALE 25' 0 25' 50'

NAD 83/NSRS 2007

BEGIN PROJECT 17BP.8.R.41
-L- POC Sta. 12+00.00

-L- PC Sta. 11+73.02

-L- PT Sta. 13+19.98

BEGIN BRIDGE
-L- Sta. 15+07.88

END BRIDGE
-L- Sta. 15+80.13

END APPROACH SLAB
-L- Sta. 15+91.13

END PROJECT 17BP.8.R.41
-L- POT Sta. 19+00.00

-L- POT Sta. 10+00.00

-L- POT Sta. 20+50.00

15+00

20+00

1 CHRISTOPHER RIGGINS DB 615 PG 838

2 RICHARD R MATTHEWS DB 341 PG 261

3 JAMES RAY HOLT DB 397 PG 210

4 PAUL THOMPSON DB 366 PG 180

5 CLYDE J RHYNE DB 397 PG 207

BARY LYNN HOLT DB 329 PG 239

JAMES RAY HOLT DB 370 PG 813

BARY LYNN HOLT DB 697 PG 769

+00 30.13' 40'
+25 30.03' 40'
+38 29.80' 50'
+79 50'
+69.85 50'
+70.21 88'
+70 30.15' 60'
+30 29.68' 60'

POWER LINE WIRE HEIGHT 326.9'
POWER LINE WIRE HEIGHT 324.25'
POWER LINE WIRE HEIGHT 323.95'
POWER LINE WIRE HEIGHT 330.57'

50' TAPER
50' TAPER

EXISTING R/W
60.00'
POWER EASEMENT
30' POWER EASEMENT DB 62 PG 74, DB 62 PG 91

N 51° 48' 14.0" E
-L-
N 49° 55' 58.1" E

-BL 1-
-BL 2-
-BL 3-

GRAU 350 TYPE III F
TYPE III TBDI
GRAU 350
TYPE III F
RETAIN
15" RCP-IV
24" RCP
15" RCP-IV
TBDI
TBDI
TBDI
AT-1
(0401)
(0402)
(0403)
(0404)

END SBG -L- STA. 16+00 LT
END SBG BEGIN EXP. GUTTER -L- STA. 16+05 RT
END EXP. GUTTER -L- STA. 18+25 RT

CLASS B RIP RAP EST. 5 TONS EST. 15 SY FABRIC

CLASS II RIP RAP TO ELEV. 304.7 (TYP) (STRUCTURE PAY ITEM)

BEGIN APPROACH SLAB
-L- Sta. 14+96.88

BM#1
BL-STA 8+50.25
O/S 74.34 RT
ELEV=305.45'
R/R SPIKE IN 20" ASH

DO NOT DISTURB FENCE ON PARCEL NO. 4

NOTE:
PROPERTY LINES ARE FROM LEE COUNTY GIS DEPT AND WERE NOT SURVEYED IN THE FIELD

DATUM DESCRIPTION

THE LOCALIZED COORDINATE SYSTEM DEVELOPED FOR THIS PROJECT IS BASED ON THE STATE PLANE COORDINATES ESTABLISHED BY OTHERS FOR MONUMENT "BL-2"
WITH NAD 83/NSRS 2007 STATE PLANE GRID COORDINATES OF
NORTHING: 614391.582(ft) EASTING: 1921853.920(ft)
ELEVATION: 306.299(ft)
THE AVERAGE COMBINED GRID FACTOR USED ON THIS PROJECT (GROUND TO GRID) IS: 0.99986814
THE N.C. LAMBERT GRID BEARING AND LOCALIZED HORIZONTAL GROUND DISTANCE FROM "BL-2" TO -L- STATION 10+00.00 IS
S 52° 02' 53.62" W 582.87'
ALL LINEAR DIMENSIONS ARE LOCALIZED HORIZONTAL DISTANCES
VERTICAL DATUM USED IS NAVD 88

-L-
PI Sta 12+46.51
△ = 1° 52' 16.0" (LT)
D = 1° 16' 23.7"
L = 146.96'
T = 73.48'
R = 4,500.00'

-L-

BEGIN PROJECT STA. 12+00.00
BEGIN GRADE STA. 12+50.00 EL = 312.36'
BLEND TO EXIST
PI = 13+70.00 EL = 308.12' VC = 240' K = 79
(-)3.5333%
REMOVE EXISTING BRIDGE
(-)0.4966%
PI = 16+60.00 EL = 306.68' VC = 120' K = 150
(+)0.3053%
END GRADE STA. 18+50.00 EL = 307.26'
END PROJECT STA. 19+00.00
BLEND TO EXIST

EXCAVATE TO BERM EST 14 CY (STRUCTURE PAY ITEM)
EXCAVATE TO BERM EST 14 CY (STRUCTURE PAY ITEM)
CLASS II RIP RAP 1.5:1 NORMAL TO TOP OF BERM (TYP.) (STRUCTURE PAY ITEM)
WSE ON 12-22-11 =293.29

330 320 310 300 290 280 270

10 11 12 13 14 15 16 17 18 19 20

BRIDGE HYDRAULIC DATA

DESIGN DISCHARGE	=	2220 CFS
DESIGN FREQUENCY	=	25 YRS
DESIGN HW ELEVATION	=	303.7 FT
BASE DISCHARGE	=	3120 CFS
BASE FREQUENCY	=	100 YRS
BASE HW ELEVATION	=	305.5 FT
OVERTOPPING DISCHARGE	=	+4200 CFS
OVERTOPPING FREQUENCY	=	+500 YRS
OVERTOPPING ELEVATION	=	306.8 FT
DATE OF SURVEY	=	12-22-11
W.S.ELEVATION AT DATE OF SURVEY	=	293.3 FT

8/20/2013
12:36:32 PM
R:\Roadway\Proj\Lee_50_rdy_psh.dgn
dav56859

PROJECT REFERENCE	SHEET NO.
17BP.8.R.41 LEE #50	TCP-1

ROADWAY DESIGN ENGINEER

NORTH CAROLINA PROFESSIONAL SEAL 21102 ENGINEER JAMES TIMOTHY JORDAN 10/16/12

HATCH MOTT MACDONALD I & E, LLC
LICENSE NO. F-0669

Prepared in the Office of: Hatch Mott MacDonald PO Box 700 Fuquay-Varina, NC 27526 www.hatchmott.com

THE FOLLOWING ROADWAY STANDARDS AS APPEAR IN "ROADWAY STANDARD DRAWINGS" – HIGHWAY DESIGN BRANCH– N.C. DEPARTMENT OF TRANSPORTATION – RALEIGH, N.C., DATED JANUARY 2012 ARE APPLICABLE TO THIS PROJECT AND BY REFERENCE HEREBY ARE CONSIDERED A PART OF THESE PLANS:

STD.	TITLE
1101.03	TEMPORARY ROAD CLOSURES
1110.01	STATIONARY WORK ZONE SIGNS
1145.01	BARRICADES
1205.01	PAVEMENT MARKINGS – LINE TYPES AND OFFSETS
1205.12	PAVEMENT MARKINGS – BRIDGES

GENERAL NOTES

CHANGES MAY BE REQUIRED WHEN PHYSICAL DIMENSIONS IN THE DETAIL DRAWINGS, STANDARD DETAILS, AND ROADWAY DETAILS ARE NOT ATTAINABLE TO MEET FIELD CONDITIONS OR RESULT IN DUPLICATE OR UNDESIRED OVERLAPPING OF DEVICES. MODIFICATION MAY INCLUDE: MOVING, SUPPLEMENTING, COVERING, OR REMOVAL OF DEVICES AS DIRECTED BY THE ENGINEER.

THE FOLLOWING GENERAL NOTES APPLY AT ALL TIMES FOR THE DURATION OF THE CONSTRUCTION PROJECT EXCEPT WHEN OTHERWISE NOTED IN THE PLAN OR DIRECTED BY THE ENGINEER.

TRAFFIC PATTERN ALTERATIONS

A) NOTIFY THE ENGINEER TWENTY ONE (21) CALENDAR DAYS PRIOR TO ANY TRAFFIC PATTERN ALTERATION.

SIGNING

B) PROVIDE PERMANENT SIGNING.

C) PROVIDE SIGNING AND DEVICES REQUIRED TO CLOSE THE ROAD ACCORDING TO THE ROADWAY STANDARD DRAWINGS AND TRAFFIC CONTROL PLANS.

PROVIDE SIGNING REQUIRED FOR THE OFF–SITE DETOUR ROUTE AS SHOWN IN THE TRAFFIC CONTROL PLANS.

D) COVER OR REMOVE ALL SIGNS AND DEVICES REQUIRED TO CLOSE THE ROAD WHEN ROAD CLOSURE IS NOT IN OPERATION.

COVER OR REMOVE ALL SIGNS REQUIRED FOR THE OFF–SITE DETOUR WHEN THE DETOUR IS NOT IN OPERATION.

E) ENSURE ALL NECESSARY SIGNING IS IN PLACE PRIOR TO ALTERING ANY TRAFFIC PATTERN.

TRAFFIC CONTROL DEVICES

F) PLACE TYPE III BARRICADES, WITH "ROAD CLOSED" SIGN R11–2 ATTACHED, OF SUFFICIENT LENGTH TO CLOSE ENTIRE ROADWAY.

PAVEMENT MARKINGS AND MARKERS

G) INSTALL PAVEMENT MARKINGS ON THE FINAL SURFACE.

PHASING

STEP 1: USING ROADWAY STANDARD DRAWING NUMBER 1101.03, SHEET 1 OF 9, AND SHEET TCP–2, PERFORM THE FOLLOWING:
- INSTALL ALL ROAD CLOSURE AND DETOUR SIGNING INCLUDING BARRICADES
- CLOSE SR 1305 (HENLEY ROAD)
- PLACE TRAFFIC ONTO OFF– SITE DETOUR

STEP 2: REMOVE EXISTING BRIDGE #50 AND CONSTRUCT THE PROPOSED BRIDGE AND APPROACHES AS SHOWN IN THE CONSTRUCTION PLANS.

STEP 3: INSTALL FINAL PAVEMENT MARKINGS.

STEP 4: REMOVE ALL TRAFFIC CONTROL SIGNING AND DEVICES AND RE–OPEN SR 1305 (HENLEY ROAD) TO THE FINAL TRAFFIC PATTERN.

PAVEMENT MARKING

PAINT WHITE EDGELINE (4")	2800 LF
PAINT YELLOW DOUBLE CENTER (4")	2800 LF

NOTE: QUANTITY INCLUDES 2 APPLICATIONS OF EACH

dev56859
r:\roadway\Proj\Lee_50_rdy_tcp.dgn
10/16/2012
3:16:37 PM

PROJECT REFERENCE	SHEET NO.
17BP.8.R.41 LEE #50	TCP-2

ROADWAY DESIGN ENGINEER

NORTH CAROLINA PROFESSIONAL SEAL 21702 ENGINEER JAMES TIMOTHY JORDAN

10/16/12

HATCH MOTT MACDONALD I & E, LLC LICENSE NO. F-0869

Prepared in the Office of: Hatch Mott MacDonald PO Box 700 Fuquay-Varina, NC 27526 www.hatchmott.com

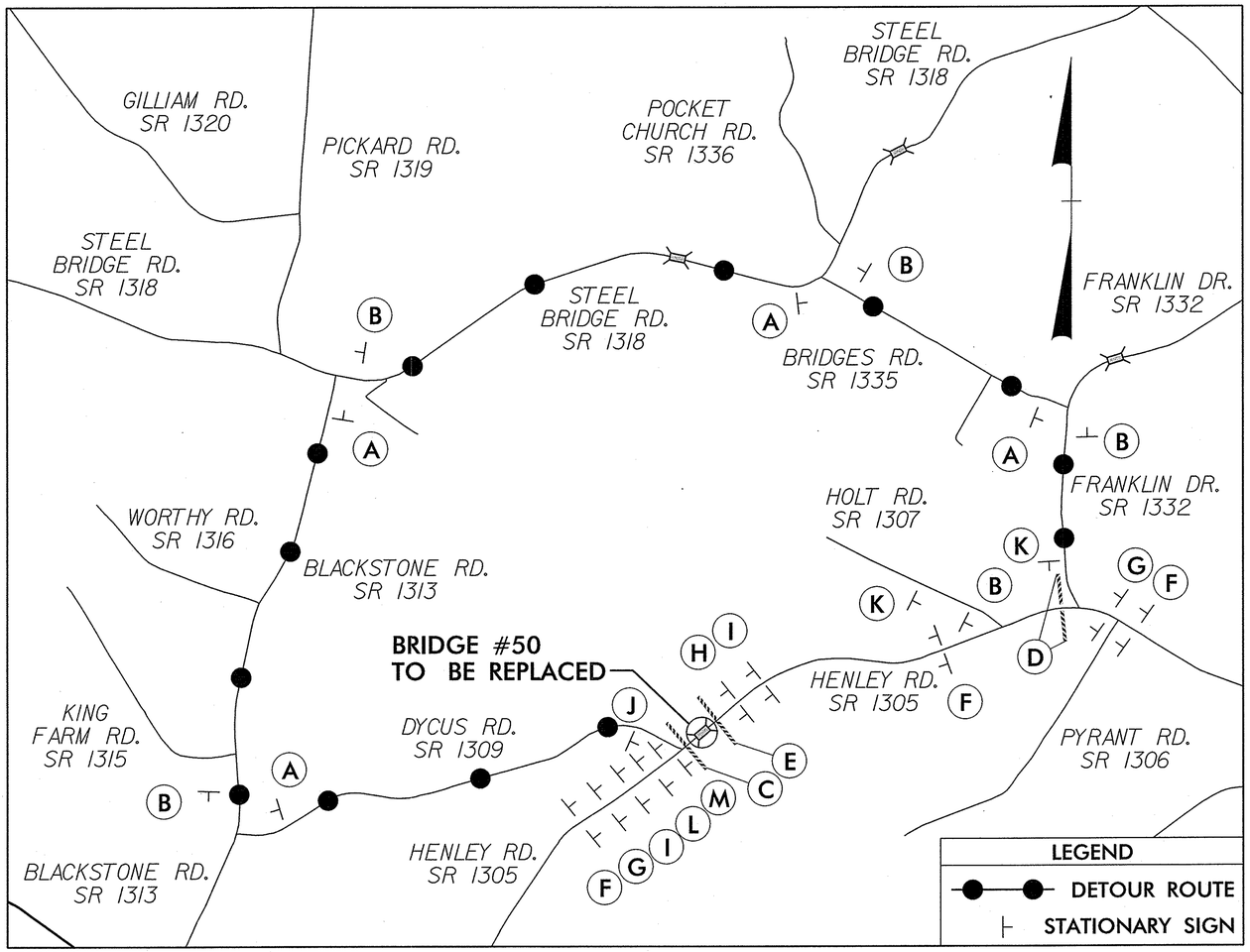

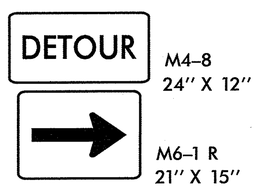

A

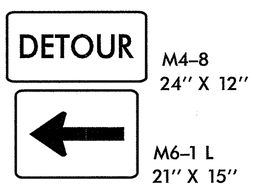

B

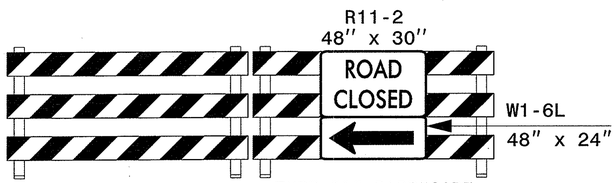

TYPE III BARRICADE

C

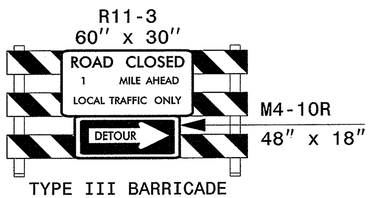

TYPE III BARRICADE

D

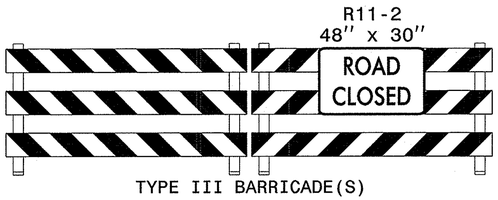

TYPE III BARRICADE(S)

E

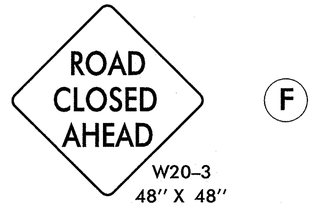

F

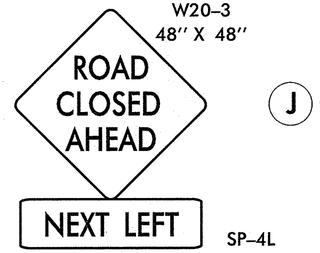

J

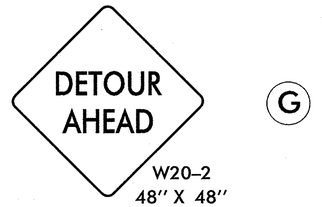

G

K

H

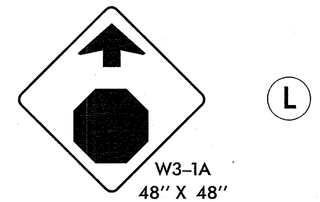

L

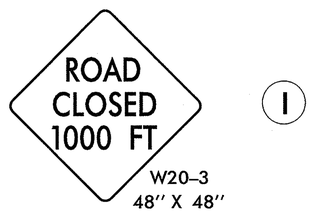

I

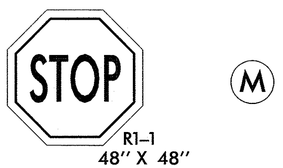

M

dgn\56859
r:\roadway\Proj\Lee_50_rdy_tcp.dgn
10/16/2012
3:16:23 PM

TIP PROJECT: 17BP.8.R.41

STATE	STATE PROJECT REFERENCE NO.	SHEET NO.	TOTAL SHEETS
N.C.	17BP.8.R.41	EC-1	

STATE PROJ. NO.	F. A. PROJ. NO.	DESCRIPTION

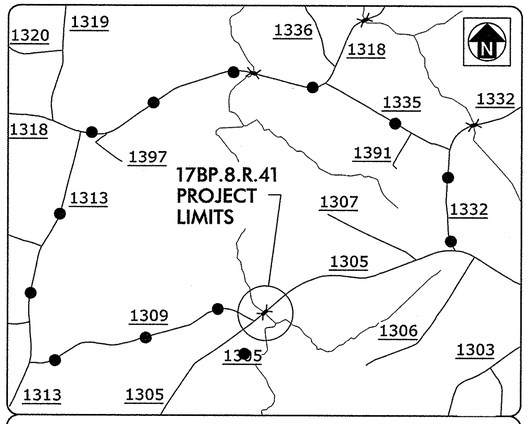

VICINITY MAP

OFF-SITE DETOUR

STATE OF NORTH CAROLINA
DIVISION OF HIGHWAYS

PLAN FOR PROPOSED
HIGHWAY EROSION CONTROL

LEE COUNTY

LOCATION: BRIDGE NO. 50 OVER POCKET CREEK ON SR 1305
TYPE OF WORK: GRADING, PAVING, DRAINAGE & STRUCTURE

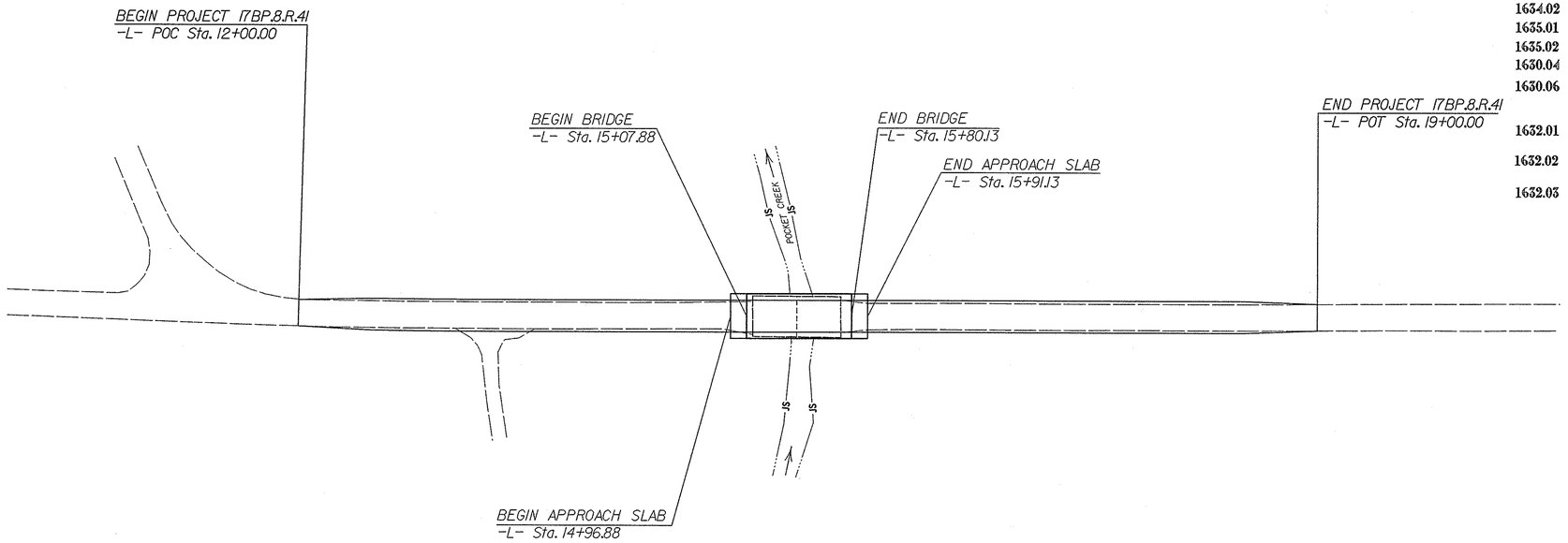

EROSION AND SEDIMENT CONTROL MEASURES

Std. #	Description	Symbol
1630.03	Temporary Silt Ditch	TSD
1630.05	Temporary Diversion	TD
1605.01	Temporary Silt Fence	
1606.01	Special Sediment Control Fence	
1622.01	Temporary Berms and Slope Drains	
1630.02	Silt Basin Type B	
1633.01	Temporary Rock Silt Check Type-A	
	Temporary Rock Silt Check Type-A with Matting and Polyacrylamide (PAM)	
1633.02	Temporary Rock Silt Check Type-B	
	Wattle / Coir Fiber Wattle	SW CFW
	Wattle / Coir Fiber Wattle with Polyacrylamide (PAM)	
1634.01	Temporary Rock Sediment Dam Type-A	
1634.02	Temporary Rock Sediment Dam Type-B	
1635.01	Rock Pipe Inlet Sediment Trap Type-A	
1635.02	Rock Pipe Inlet Sediment Trap Type-B	
1630.04	Stilling Basin	
1630.06	Special Stilling Basin	
	Rock Inlet Sediment Trap:	
1632.01	Type A	A
1632.02	Type B	B
1632.03	Type C	C
	Skimmer Basin	
	Tiered Skimmer Basin	
	Infiltration Basin	

THIS PROJECT CONTAINS EROSION CONTROL PLANS FOR CLEARING AND GRUBBING PHASE OF CONSTRUCTION.

JOSHUA G. DALTON, PE, CPESC
LEVEL IIIA NAME

307
LEVEL IIIA CERTIFICATION NO.

GRAPHIC SCALE

25 0 50
PLANS
25 0 50
PROFILE (HORIZONTAL)
5 0 10
PROFILE (VERTICAL)

ROADSIDE ENVIRONMENTAL UNIT
DIVISION OF HIGHWAYS
STATE OF NORTH CAROLINA

2012 STANDARD SPECIFICATIONS

THESE EROSION AND SEDIMENT CONTROL PLANS COMPLY WITH THE REGULATIONS SET FORTH BY THE NCG-010000 GENERAL CONSTRUCTION PERMIT EFFECTIVE AUGUST 3, 2011 ISSUED BY THE NORTH CAROLINA DEPARTMENT OF ENVIRONMENT AND NATURAL RESOURCES DIVISION OF WATER QUALITY.

Prepared In the Office of:

SUNGATE DESIGN GROUP, P.A.
915 JONES FRANKLIN ROAD
RALEIGH, NORTH CAROLINA 27606
TEL (919) 859-2243 FAX (919) 859-6258
ENG FIRM LICENSE NO. C-690

HYDRAULICS ENGINEER

NORTH CAROLINA PROFESSIONAL SEAL 26971 ENGINEER JOSHUA G. DALTON
10/17/12

SIGNATURE: *P.E.*

Roadway Standard Drawings

The following roadway english standards as appear in "Roadway Standard Drawings"- Roadway Design Unit – N. C. Department of Transportation – Raleigh, N. C., dated January 2012 and the latest revison thereto are applicable to this project and by reference hereby are considered a part of these plans.

1604.01	Railroad Erosion Control Detail	1632.01	Rock Inlet Sediment Trap Type A
1605.01	Temporary Silt Fence	1632.02	Rock Inlet Sediment Trap Type B
1606.01	Special Sediment Control Fence	1632.03	Rock Inlet Sediment Trap Type C
1607.01	Gravel Construction Entrance	1633.01	Temporary Rock Silt Check Type A
1622.01	Temporary Berms and Slope Drains	1633.02	Temporary Rock Silt Check Type B
1630.01	Riser Basin	1634.01	Temporary Rock Sediment Dam Type A
1630.02	Silt Basin Type B	1634.02	Temporary Rock Sediment Dam Type B
1630.03	Temporary Silt Ditch	1635.01	Rock Pipe Inlet Sediment Trap Type A
1630.04	Stilling Basin	1635.02	Rock Pipe Inlet Sediment Trap Type B
1630.05	Temporary Diversion	1640.01	Coir Fiber Baffle
1630.06	Special Stilling Basin	1645.01	Temporary Stream Crossing
1631.01	Matting Installation		

$$$$$$SYSTIME$$$$$$
$$$$$$USERNAME$$$$$$

PROJECT REFERENCE NO.	SHEET NO.
17BP.8.R.41	EC-2
R/W SHEET NO.	
ROADWAY DESIGN ENGINEER	HYDRAULICS ENGINEER

SILT FENCE WATTLE BREAK DETAIL

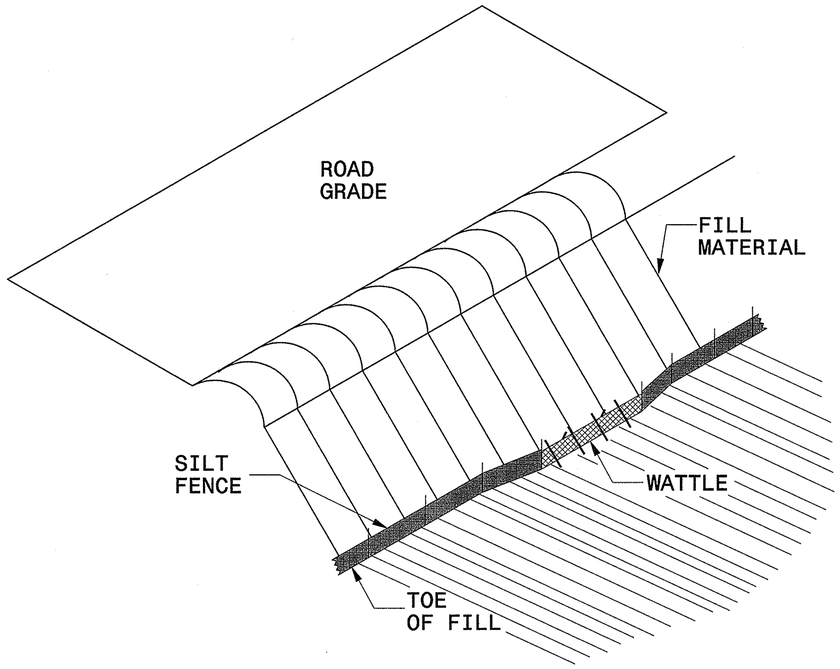

ISOMETRIC VIEW

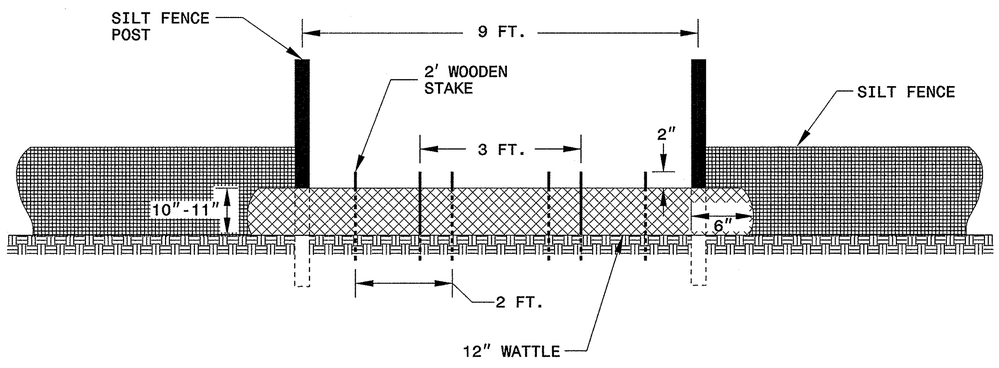

VIEW FROM SLOPE

NOTES:

USE MINIMUM 12 IN. DIAMETER EXCELSIOR WATTLE AND LENGTH OF 10 FT.

EXCAVATE A 1 TO 2 INCH TRENCH FOR WATTLE TO BE PLACED.

DO NOT PLACE WATTLE ON TOE OF SLOPE.

USE 2 FT. WOODEN STAKES WITH A 2 IN. BY 2 IN. NOMINAL CROSS SECTION.

INSTALL A MINIMUM OF 2 UPSLOPE STAKES AND 4 DOWNSLOPE STAKES AT AN ANGLE TO WEDGE WATTLE TO GROUND.

PROVIDE STAPLES MADE OF 0.125 IN. DIAMETER STEEL WIRE FORMED INTO A U SHAPE NOT LESS THAN 12" IN LENGTH.

INSTALL STAPLES APPROXIMATELY EVERY 1 LINEAR FOOT ON BOTH SIDES OF WATTLE AND AT EACH END TO SECURE IT TO THE SOIL.

WATTLE INSTALLATION CAN BE ON OUTSIDE OF THE SILT FENCE AS DIRECTED.

INSTALL TEMPORARY SILT FENCE IN ACCORDANCE WITH SECTION 1605 OF THE STANDARD SPECIFICATIONS.

INSET A

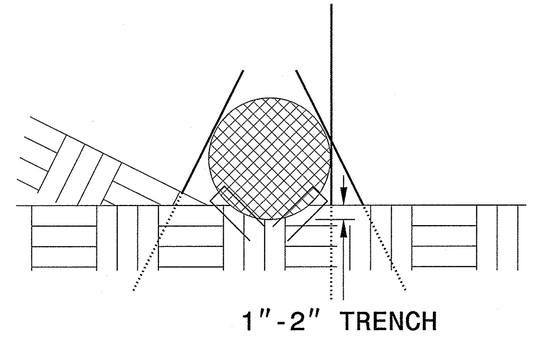

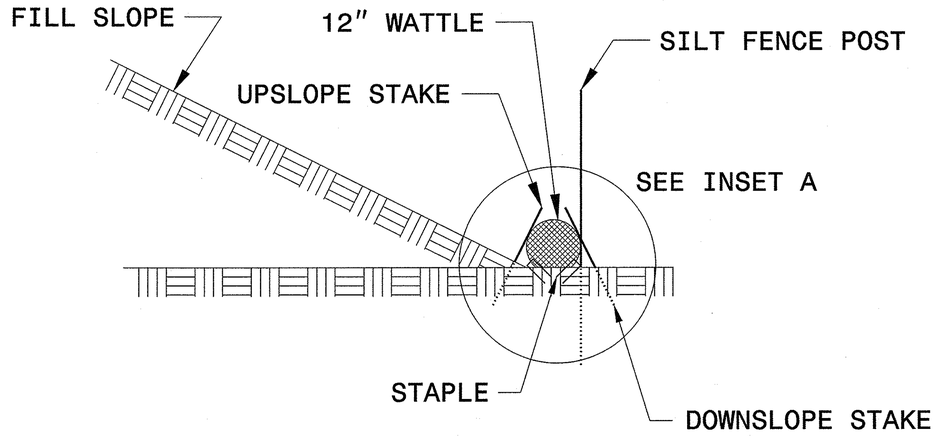

SIDE VIEW

PROJECT REFERENCE NO.	SHEET NO.
17BP.8.R.41	EC-2A
R/W SHEET NO.	
ROADWAY DESIGN ENGINEER	HYDRAULICS ENGINEER

WATTLE WITH POLYACRYLAMIDE (PAM) DETAIL

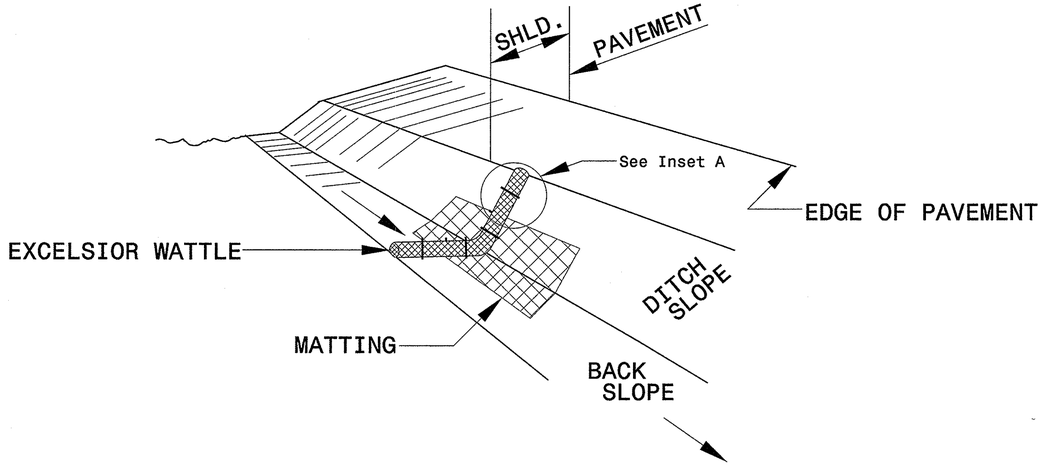

ISOMETRIC VIEW

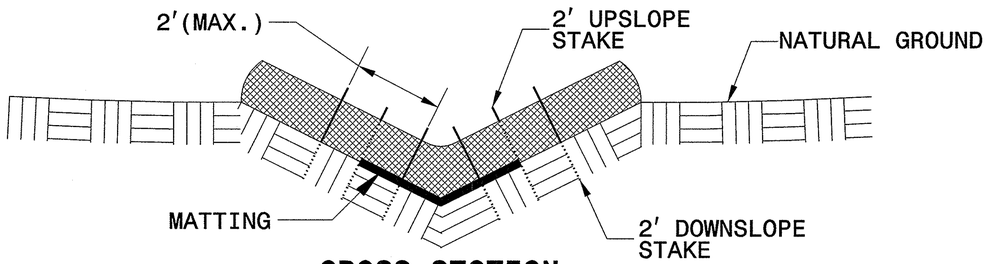

CROSS SECTION VEE DITCH

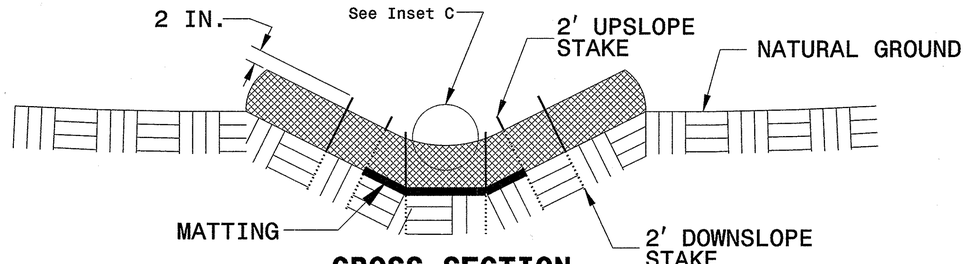

CROSS SECTION TRAPEZOIDAL DITCH

NOTES:

USE MINIMUM 12 IN. DIAMETER EXCELSIOR WATTLE.

USE 2 FT. WOODEN STAKES WITH A 2 IN. BY 2 IN. NOMINAL CROSS SECTION.

ONLY INSTALL WATTLE(S) TO A HEIGHT IN DITCH SO FLOW WILL NOT WASH AROUND WATTLE AND SCOUR DITCH SLOPES AND AS DIRECTED.

INSTALL A MINIMUM OF 2 UPSLOPE STAKES AND 4 DOWNSLOPE STAKES AT AN ANGLE TO WEDGE WATTLE TO BOTTOM OF DITCH.

PROVIDE STAPLES MADE OF 0.125 IN. DIAMETER STEEL WIRE FORMED INTO A U SHAPE NOT LESS THAN 12″ IN LENGTH.

INSTALL STAPLES APPROXIMATELY EVERY 1 LINEAR FOOT ON BOTH SIDES OF WATTLE AND AT EACH END TO SECURE IT TO THE SOIL.

INSTALL MATTING IN ACCORDANCE WITH SECTION 1631 OF THE STANDARD SPECIFICATIONS.

PRIOR TO POLYACRYLAMIDE (PAM) APPLICATION, OBTAIN A SOIL SAMPLE FROM PROJECT LOCATION, AND FROM OFFSITE MATERIAL, AND ANALYZE FOR APPROPRIATE PAM FLOCCULANT TO BE APPLIED TO EACH WATTLE.

INITIALLY APPLY 2 OUNCES OF ANIONIC OR NEUTRALLY CHARGED PAM OVER WATTLE WHERE WATER WILL FLOW AND 1 OUNCE OF PAM ON MATTING ON EACH SIDE OF WATTLE. REAPPLY PAM AFTER EVERY RAINFALL EVENT THAT IS EQUAL TO OR EXCEEDS 0.50 IN.

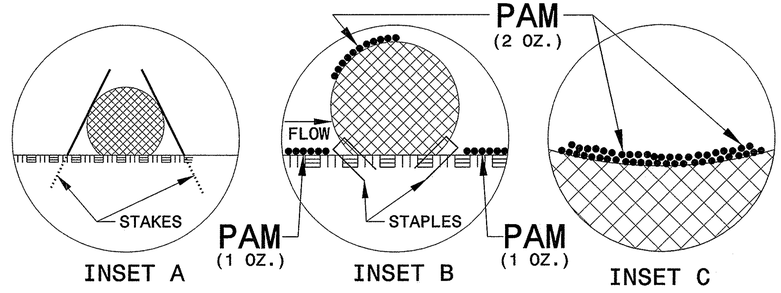

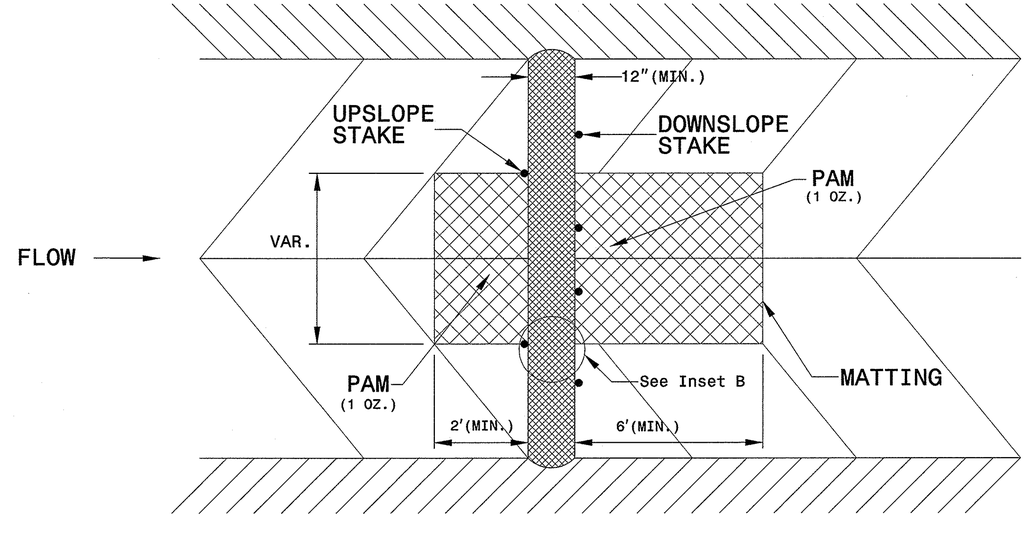

TOP VIEW

PROJECT REFERENCE NO.	SHEET NO.
17BP.8.R.41	EC-2B
R/W SHEET NO.	
ROADWAY DESIGN ENGINEER	HYDRAULICS ENGINEER

WATTLE BARRIER DETAIL

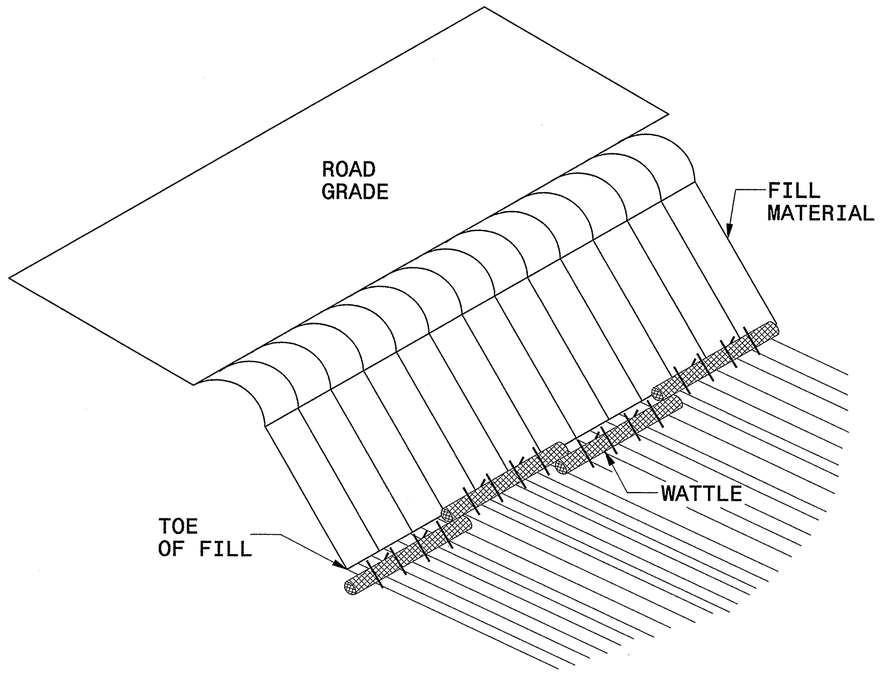

ISOMETRIC VIEW

NOTES:

USE MINIMUM 12 IN. DIAMETER EXCELSIOR WATTLE AND LENGTH OF 10 FT.

EXCAVATE A 1 TO 2 INCH TRENCH FOR WATTLE TO BE PLACED.

DO NOT PLACE WATTLES ON TOE OF SLOPE.

USE 2 FT. WOODEN STAKES WITH A 2 IN. BY 2 IN. NOMINAL CROSS SECTION.

INSTALL A MINIMUM OF 2 UPSLOPE STAKES AND 4 DOWNSLOPE STAKES AT AN ANGLE TO WEDGE WATTLE TO GROUND.

PROVIDE STAPLES MADE OF 0.125 IN. DIAMETER STEEL WIRE FORMED INTO A U SHAPE NOT LESS THAN 12″ IN LENGTH.

INSTALL STAPLES APPROXIMATELY EVERY 1 LINEAR FOOT ON BOTH SIDES OF WATTLE AND AT EACH END TO SECURE IT TO THE SOIL.

FOR BREAKS ALONG LARGE SLOPES, USE MAXIMUM SPACING OF 20 FT.

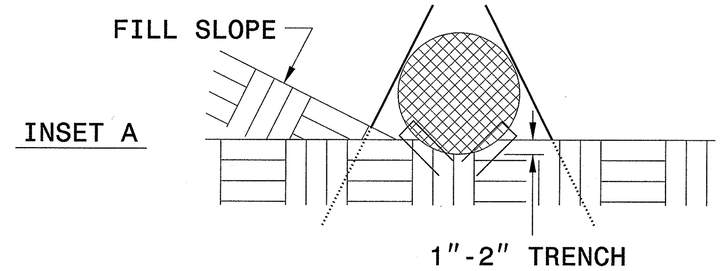

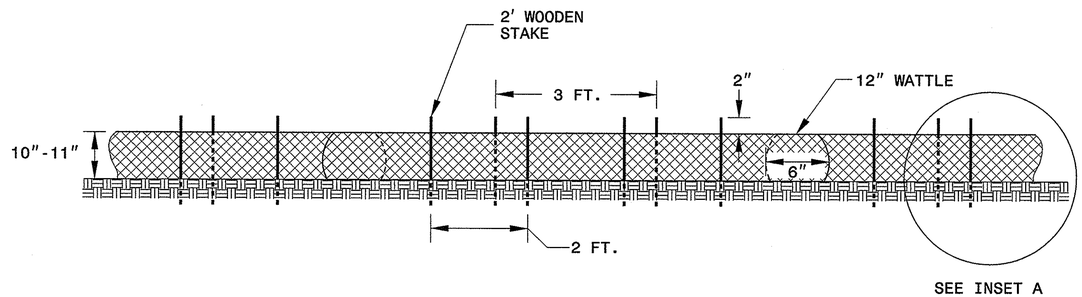

FRONT VIEW

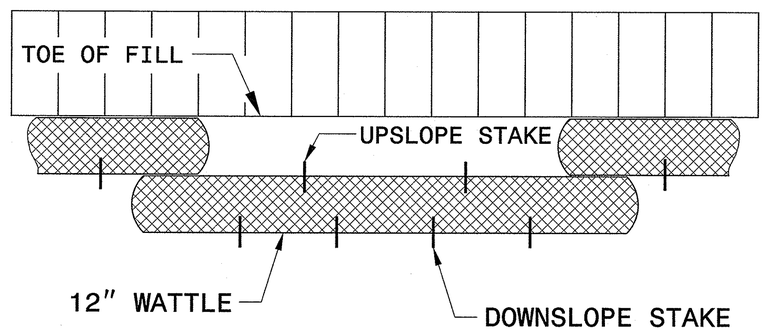

TOP VIEW

PROJECT REFERENCE NO.	SHEET NO.
17BP.8.R.41	EC-3
ROADWAY DESIGN ENGINEER	HYDRAULICS ENGINEER

DIVISION OF HIGHWAYS
STATE OF NORTH CAROLINA

SOIL STABILIZATION TIMEFRAMES

SITE DESCRIPTION	STABILIZATION TIME	TIMEFRAME EXCEPTIONS
PERIMETER DIKES, SWALES, DITCHES AND SLOPES	7 DAYS	NONE
HIGH QUALITY WATER (HQW) ZONES	7 DAYS	NONE
SLOPES STEEPER THAN 3:1	7 DAYS	IF SLOPES ARE 10' OR LESS IN LENGTH AND ARE NOT STEEPER THAN 2:1, 14 DAYS ARE ALLOWED.
SLOPES 3:1 OR FLATTER	14 DAYS	7 DAYS FOR SLOPES GREATER THAN 50' IN LENGTH.
ALL OTHER AREAS WITH SLOPES FLATTER THAN 4:1	14 DAYS	NONE, EXCEPT FOR PERIMETERS AND HQW ZONES.

PROJECT REFERENCE NO.	SHEET NO.
17BP.8.R.41	EC-04/CONST.04
R/W SHEET NO.	
ROADWAY DESIGN ENGINEER	HYDRAULICS ENGINEER

NORTH CAROLINA PROFESSIONAL SEAL 26970 ENGINEER VIRGINIA G. DALTON
10/17/12

CLEARING AND GRUBBING EROSION CONTROL FOR CONSTRUCTION SHEET 4

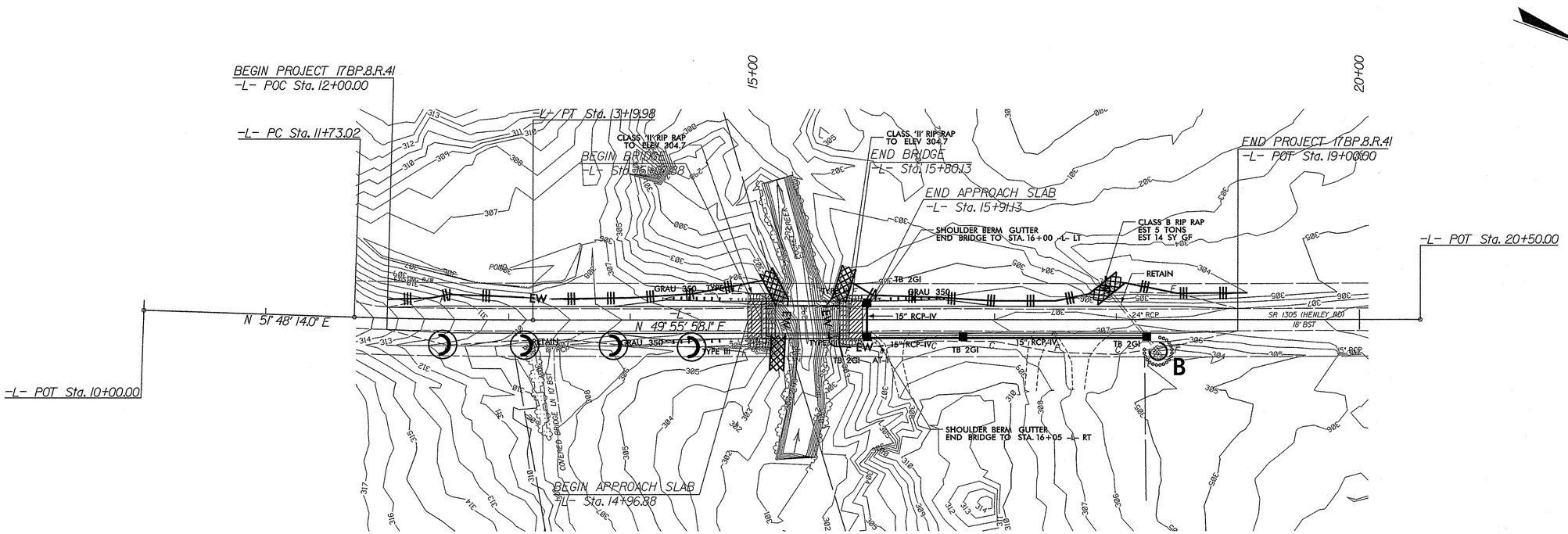

-L-
PI Sta 12+46.51
△ = 1° 52' 16.0" (LT)
D = 1° 16' 23.7"
L = 146.96'
T = 73.48'
R = 4,500.00'

CLEARING & GRUBBING PLAN

PROJECT REFERENCE NO.	SHEET NO.
17BP.8.R.41	EC-05/CONST.04
R/W SHEET NO.	
ROADWAY DESIGN ENGINEER	HYDRAULICS ENGINEER

NORTH CAROLINA PROFESSIONAL SEAL 25697 ENGINEER JOSHUA C. DALTON
10/17/12

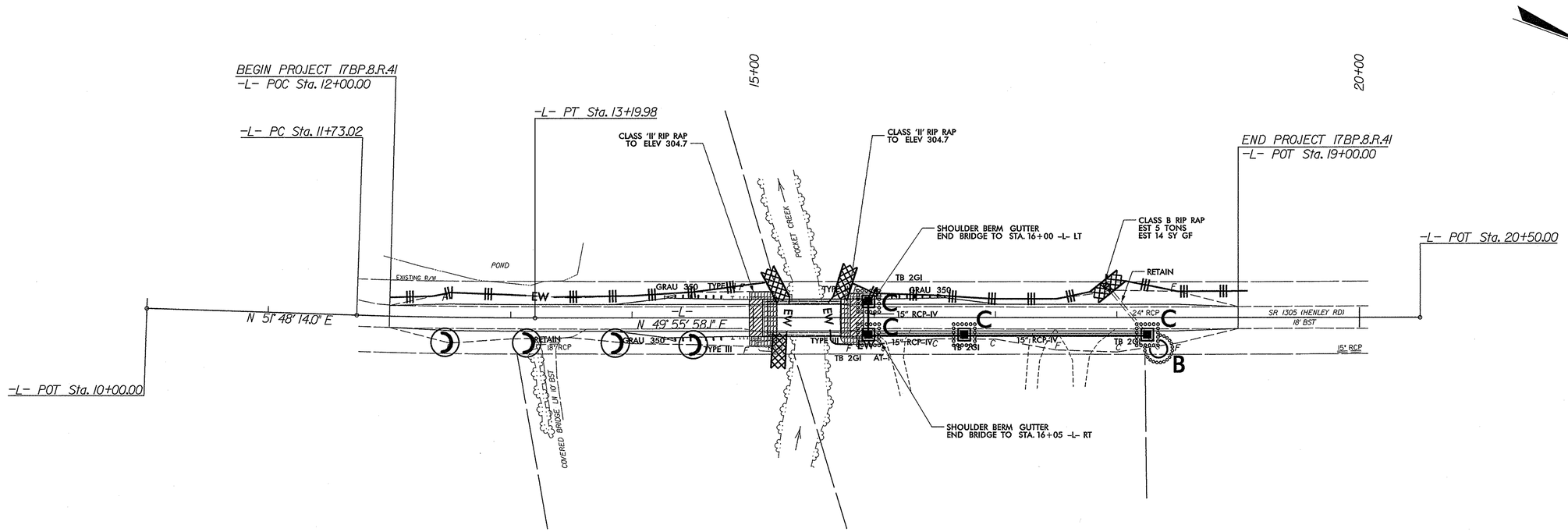

-L-
PI Sta 12+46.51
△ = 1° 52' 16.0" (LT)
D = 1° 16' 23.7"
L = 146.96'
T = 73.48'
R = 4,500.00'

FINAL GRADE PLAN

09/08/99

TIP PROJECT: 17BP.8.R.41

CONTRACT:

$$$$$$SYSTIME$$$$$$
$$$$$$$$$$$$$$$$$$$$DGN$$$$$$$$$$$$$$$$$$$$
$$$$USERNAME$$$$

STATE OF NORTH CAROLINA
DIVISION OF HIGHWAYS

LEE COUNTY

STATE	STATE PROJECT REFERENCE NO.	SHEET NO.	TOTAL SHEETS
N.C.	17BP.8.R.41	UC-01	6

UTILITY DESIGN ENGINEER

NORTH CAROLINA PROFESSIONAL SEAL 036216 ENGINEER KEVIN C. ZOLES

2012-OCT-17

LOCATION: BRIDGE NO.50 OVER POCKET CREEK ON SR SR 1305 (HENLEY ROAD)

TYPE OF WORK: UTILITIES CONSTRUCTION

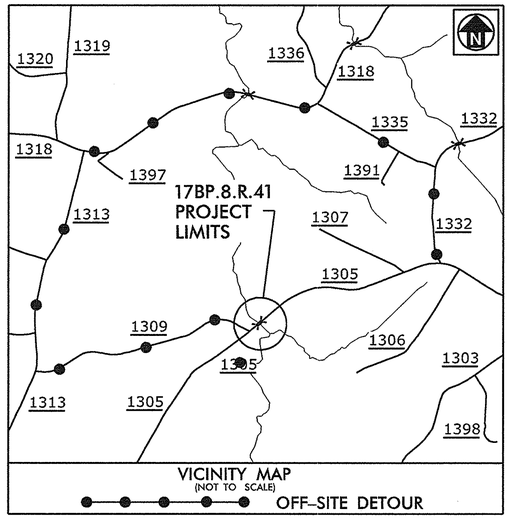

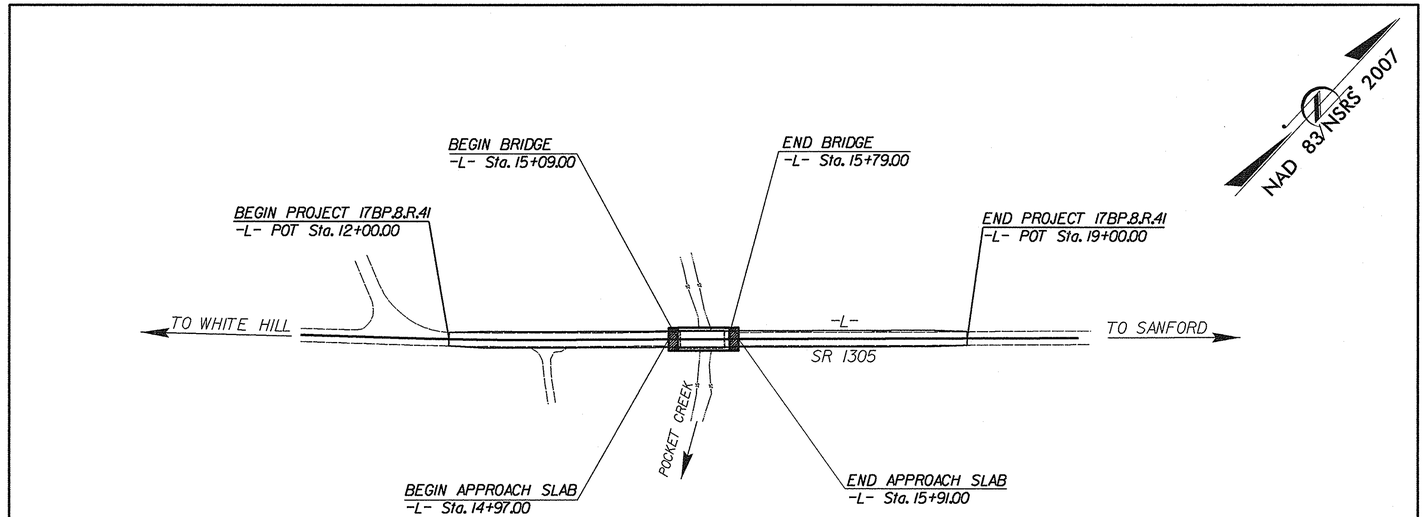

GRAPHIC SCALES

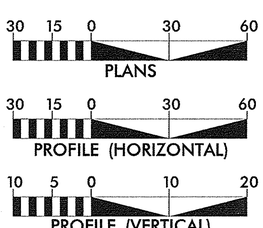

PROJECT LENGTH

LENGTH ROADWAY OF TIP PROJECT =	*0.120 MI.*
LENGTH OF STRUCTURE TIP PROJECT =	*0.013 MI.*
TOTAL LENGTH OF TIP PROJECT =	*0.133 MI.*

INDEX OF SHEETS

SHEET NO.	*DESCRIPTION*
UC-01	*TITLE SHEET*
UC-02	*SYMBOLOGY SHEET*
UC-03	*GENERAL NOTES SHEET*
UC-03A TO UC-03B	*DETAIL SHEETS*
UC-04	*PLAN SHEETS*

UTILITY OWNERS ON PROJECT

WATER - CITY OF SANFORD

UTILITY DESIGN BY:

MA Engineering CONSULTANTS, INC.
598 East Chatham Street, Suite 137 Cary, NC 27511
Phone: 919.297.0220 Fax. 919.297.0221

NCDOT PROJECT ENGINEER:
TIMOTHY WELCH, P.E.
PREPARED FOR:
NORTH CAROLINA
DEPARTMENT OF TRANSPORTATION
DIVISION 8 BRIDGE PROGRAM

STATE OF NORTH CAROLINA
DIVISION OF HIGHWAYS

UTILITIES PLAN SHEET SYMBOLS

PROPOSED WATER SYMBOLS

Item	Symbol
Water Line (Sized as Shown)	12" WL
11¼ Degree Bend	
22½ Degree Bend	
45 Degree Bend	
90 Degree Bend	
Plug	
Tee	
Cross	
Reducer	
Gate Valve	GV
Butterfly Valve	BV
Tapping Valve	TGV
Line Stop	LS
Line Stop with Bypass	LS/BP
Blow Off	BO
Fire Hydrant	PFH
Relocate Fire Hydrant	RFH
Remove Fire Hydrant	REM FH
Water Meter	PWM
Relocate Water Meter	RWM
Remove Water Meter	REM WM
Water Pump Station	PS(W)
RPZ Backflow Preventer	PRPZ
DCV Backflow Preventer	PBFP
Relocate RPZ Backflow Preventer	RRPZ
Relocate DCV Backflow Preventer	RBFP

PROPOSED SEWER SYMBOLS

Item	Symbol
Gravity Sewer Line (Sized as Shown)	12" SS
Force Main Sewer Line (Sized as Shown)	12" FSS
Manhole (Sized per Note)	
Sewer Pump Station	PS(SS)

PROPOSED MISCELLANOUS UTILITIES SYMBOLS

Item	Symbol
Power Pole	
Telephone Pole	
Joint Use Pole	
Telephone Pedestal	TEL PED
Utility Line by Others (Type as Shown)	PROP O/H POW LINES
Trenchless Installation	12" TL INSTALL
Encasement by Open Cut	24" ENCAS BY OC
Encasement	24" ENCASEMENT
Thrust Block	
Air Release Valve	AR
Utility Vault	UV
Concrete Pier	CP
Steel Pier	SP
Plan Note	NOTE
Pay Item Note	PAY ITEM

EXISTING UTILITIES SYMBOLS

Item	Symbol
Power Pole	
Telephone Pole	
Joint Use Pole	
Utility Pole	
Utility Pole with Base	
H-Frame Pole	
Power Transmission Line Tower	
Water Manhole	
Power Manhole	
Telephone Manhole	
Sanitary Sewer Manhole	
Hand Hole for Cable	
Power Transformer	
Telephone Pedestal	
CATV Pedestal	
Gas Valve	
Gas Meter	
Located Miscellaneous Utility Object	
Abandoned According to Utility Records	AATUR
End of Information	E.O.I.
*Underground Power Line	P
*Underground Telephone Cable	T
*Underground Telephone Conduit	TC
*Underground Fiber Optics Telephone Cable	T FO
*Underground TV Cable	TV
*Underground Fiber Optics TV Cable	TV FO
*Underground Gas Pipeline	G
Aboveground Gas Pipeline	A/G Gas
*Underground Water Line	W
Aboveground Water Line	A/G Water
*Underground Gravity Sanitary Sewer Line	SS
Aboveground Gravity Sanitary Sewer Line	A/G Sanitary Sewer
*Underground SS Forced Main Line	FSS
Underground Unknown Utility Line	?UTL
SUE Test Hole	
Water Meter	
Water Valve	
Fire Hydrant	
Sanitary Sewer Cleanout	

*For Existing Utilities

Item	Symbol
Utility Line Drawn from Record (Type as Shown)	W
Designated Utility Line (Type as Shown)	W

8/17/99

REVISIONS

PROJECT REFERENCE NO.	SHEET NO.
17BP.8.R.41	UC-03

UTILITY DESIGN ENGINEER

NORTH CAROLINA PROFESSIONAL SEAL 036786 ENGINEER KEVIN C. ZOBS

2012-OCT-17

MA Engineering CONSULTANTS, INC.
598 E. Chatham, Street, Suite 137
Cary, N. C. 27511

UTILITY CONSTRUCTION

GENERAL NOTES:

1. THE PROPOSED UTILITY CONSTRUCTION SHALL MEET THE APPLICABLE REQUIREMENTS OF THE NC DEPARTMENT OF TRANSPORTATION'S "STANDARD SPECIFICATIONS FOR ROADS AND STRUCTURES" DATED JANUARY 2012.

2. THE EXISTING UTILITIES BELONG TO:

CITY OF SANFORD
CONTACT: PAUL WEEKS JR., PE
PHONE: 919-775-8010

3. ALL WATER LINES TO BE INSTALLED WITHIN COMPLIANCE OF THE RULES AND REGULATIONS OF THE NORTH CAROLINA DEPARTMENT OF ENVIRONMENTAL AND NATURAL RESOURCES, DIVISION OF ENVIRONMENTAL HEALTH. ALL SEWER LINES TO BE INSTALLED WITHIN COMPLIANCE OF THE RULES AND REGULATIONS OF THE NORTH CAROLINA DEPARTMENT OF ENVIRONMENT AND NATURAL RESOURCES, DIVISION OF WATER QUALITY. PERFORM ALL WORK IN ACCORDANCE WITH THE APPLICABLE PLUMBING CODES.

4. THE UTILITY OWNER OWNS THE EXISTING UTILITY FACILITIES AND WILL OWN THE NEW UTILITY FACILITIES AFTER ACCEPTANCE BY THE DEPARTMENT. THE DEPARTMENT OWNS THE CONSTRUCTION CONTRACT AND HAS ADMINISTRATIVE AUTHORITY. COMMUNICATIONS AND DECISIONS BETWEEN THE CONTRACTOR AND UTILITY OWNER ARE NOT BINDING UPON THE DEPARTMENT OR THIS CONTRACT UNLESS AUTHORIZED BY THE ENGINEER. AGREEMENTS BETWEEN THE UTILITY OWNER AND CONTRACTOR FOR THE WORK THAT IS NOT PART OF THIS CONTRACT OR IS SECONDARY TO THIS CONTRACT ARE ALLOWED, BUT ARE NOT BINDING UPON THE DEPARTMENT.

5. PROVIDE ACCESS FOR THE DEPARTMENT PERSONNEL AND THE OWNER'S REPRESENTATIVES TO ALL PHASES OF CONSTRUCTION. NOTIFY DEPARTMENT PERSONNEL AND THE UTILITY OWNER TWO WEEKS PRIOR TO COMMENCEMENT OF ANY WORK AND ONE WEEK PRIOR TO SERVICE INTERRUPTION. KEEP UTILITY OWNERS' REPRESENTATIVES INFORMED OF WORK PROGRESS AND PROVIDE OPPORTUNITY FOR INSPECTION OF CONSTRUCTION AND TESTING.

6. THE PLANS DEPICT THE BEST AVAILABLE INFORMATION FOR THE LOCATION, SIZE, AND TYPE OF MATERIAL FOR ALL EXISTING UTILITIES. MAKE INVESTIGATIONS FOR DETERMINING THE EXACT LOCATION, SIZE, AND TYPE MATERIAL OF THE EXISTING FACILITIES AS NECESSARY FOR THE CONSTRUCTION OF THE PROPOSED UTILITIES AND FOR AVOIDING DAMAGE TO EXISTING FACILITIES. REPAIR ANY DAMAGE INCURRED TO EXISTING FACILITIES TO THE ORIGINAL OR BETTER CONDITION AT NO ADDITONAL COST TO THE DEPARTMENT. FOR CITY OF SANFORD UTITLITY LINE LOCATES, CALL 919-775-8247.

7. MAKE FINAL CONNECTIONS OF THE NEW WORK TO THE EXISTING SYSTEM WHERE INDICATED ON THE PLANS, AS REQUIRED TO FIT THE ACTUAL CONDITIONS, OR AS DIRECTED.

8. MAKE CONNECTIONS BETWEEN EXISTING AND PROPOSED UTILITIES AT TIMES MOST CONVENIENT TO THE PUBLIC, WITHOUT ENDANGERING THE UTILITY SERVICE, AND IN ACCORDANCE WITH THE UTILITY OWNER'S REQUIREMENTS. MAKE CONNECTIONS ON WEEKENDS, AT NIGHT, AND ON HOLIDAYS IF NECESSARY.

9. ALL UTILITY MATERIALS SHALL BE APPROVED PRIOR TO DELIVERY TO THE PROJECT. SEE 1500-7, " SUBMITTALS AND RECORDS" IN SECTION 1500 OF THE STANDARD SPECIFICATIONS.

PROJECT SPECIFIC NOTES:

1. CONTRACTOR'S ATTENTION IS DIRECTED TO SECTIONS 102, 107, AND 1550 OF THE STANDARD SPECIFICATIONS CONCERNING TRENCHLESS INSTALLATION. IT IS CONTRACTOR'S RESPONSIBILITY TO HAVE BORE PATH DESIGNED AND SEALED BY A LICENSED NORTH CAROLINA PROFESSIONAL ENGINEER. NO DAMAGE IS ALLOWED TO RIVER, WETLANDS, OR BUFFER ZONES.

2. CONTRACTOR SHALL NOT OPERATE ANY VALVES ON THE EXISTING UTILITY SYSTEMS. CONTRACTOR SHALL CONTACT THE UTILITY OWNER TO CONDUCT STRATEGIC OPERATION OF VALVES FOR SERVICE INTERRUPTION IN ORDER TO PERFORM SPECIFIC WORK.

3. PROPOSED 10-INCH WATER LINE FOR HDD INSTALLATION SHALL BE HDPE PE-3608 DR-9 AND CONFORM TO AWWA C-906.

4. PROPOSED 8 INCH WATER LINE FOR OPEN TRENCH INSTALLATION SHALL BE DUCTILE IRON RESTRAINED JOINT WITH PIPE CLASS 50 IN ACCORDANCE WITH ANSI/AWWA C150/A21.50.

5. ALL WATER LINE FITTINGS SHALL BE RESTRAINED JOINT DUCTILE IRON IN ACCORDANCE WITH ANSI/AWWA C110/A21.10.

6. ALL PROPOSED FITTINGS (BENDS, TEES, CROSSES, REDUCERS, PLUGS, ETC.) SHALL BE ADEQUATELY RESTRAINED BY THE USE OF RESTRAINED JOINT CONSTRUCTION AND / OR CAST IN PLACE CONCRETE THRUST RESTRAINTS AS DETAILED ON THESE DRAWINGS, OR AS DIRECTED BY THE RESIDENT ENGINEER.

7. PROVIDE THRUST RESTRAINT ON THE EXISTING PVC WATERLINE WHERE TIE-INS ARE MADE AS NECESSARY BY USE OF MEGALUG RESTRAINTS OR APPROVED EQUAL.

8. GATE VALVES SHALL BE EITHER IRON BODY, DOUBLE DISC, PARALLEL SEAT; OR RESILIENT WEDGE, FULLY BRONZE MOUNTED.

PROJECT REFERENCE NO.	SHEET NO.
17BP.8.R.41	UC-3A

NORTH CAROLINA PROFESSIONAL SEAL 027661 ENGINEER KEVIN C. ZDEB

2012-OCT-17

MA Engineering CONSULTANTS, INC.
598 East Chatham Street Suite 137 Cary, NC 27511
Phone: 919.297.0220 Fax: 919.297.0221

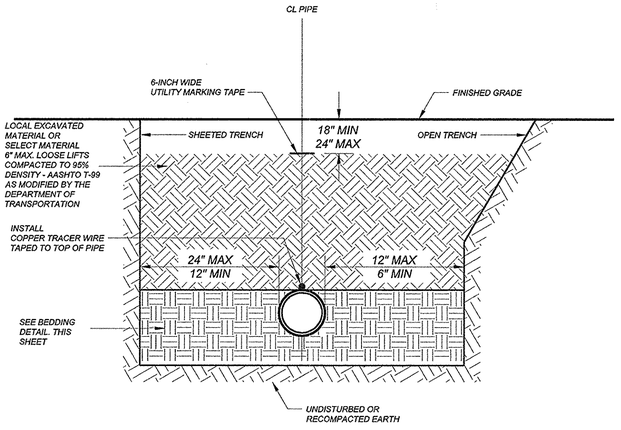

NOTES:
1. ALL SHORING & TRENCHING SHALL COMPLY WITH OSHA SAFETY STANDARDS FOR THE CONSTRUCTION INDUSTRY.
2. BELL HOLES NOT SHOWN.
3. ALL BACKFILL MATERIAL SHALL BE FREE OF ROCKS, FOREIGN MATERIAL, AND FROZEN EARTH.

GENERAL TRENCH DETAIL
NTS

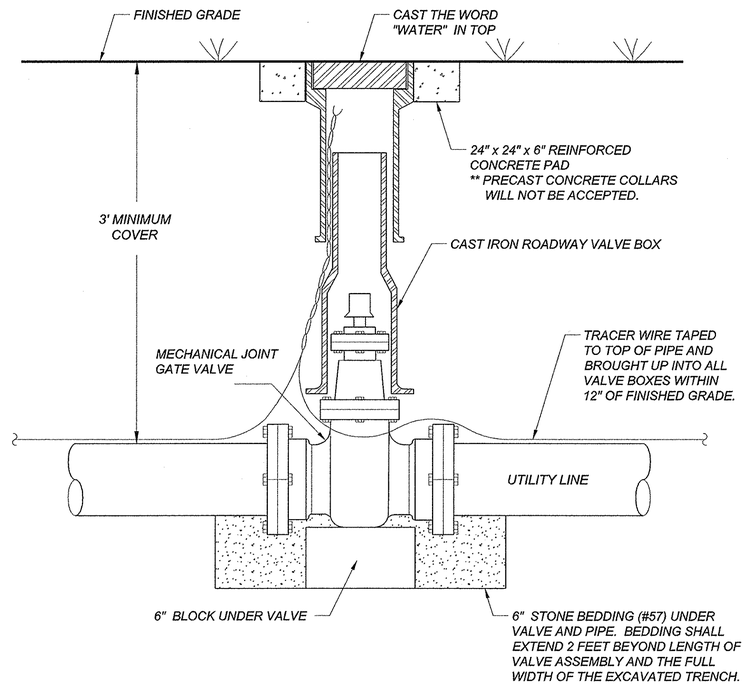

GATE VALVE DETAIL
NTS

MAXIMUM TRENCH WIDTH
AT TOP OF PIPE

NOMINAL PIPE SIZE (INCHES)	TRENCH WIDTH (INCHES)	NOMINAL PIPE SIZE (INCHES)	TRENCH WIDTH (INCHES)
4	28	20	44
6	30	24	48
8	32	30	54
10	34	36	60
12	36	42	66
14	38	48	72
16	40	54	78
18	42		

TYPE 4
(BEDDING FOR D.I. PIPE)

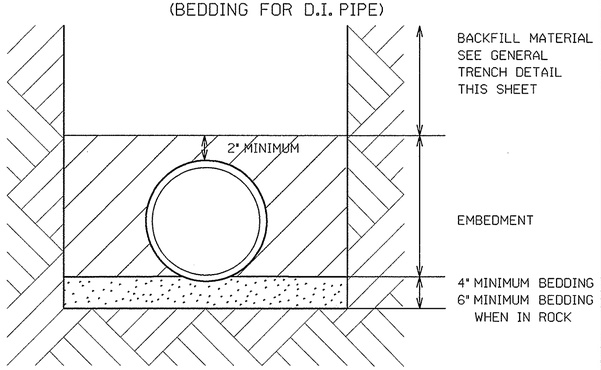

PIPE BEDDED ON SAND, GRAVEL, OR CRUSHED STONE TO A MINIMUM DEPTH OF 4 INCHES UNDER PIPE AND LIGHTLY TAMPED IN PLACE. EMBEDMENT BACKFILLED IN LOOSE 6 INCHES LAYERS COMPACTED TO TOP OF PIPE USING LOCAL EXCAVATED MATERIAL, IF APPROVED BY THE ENGINEER, OR SELECT MATERIAL. ALL MATERIAL SHALL BE FREE OF ROCKS, FOREIGN MATERIAL, AND FROZEN EARTH. COMPACTION SHALL BE TO APPROX. 95% DENSITY IN ACCORDANCE WITH AASHTO T-99 AS MODIFIED BY THE DEPARTMENT OF TRANSPORTATION.

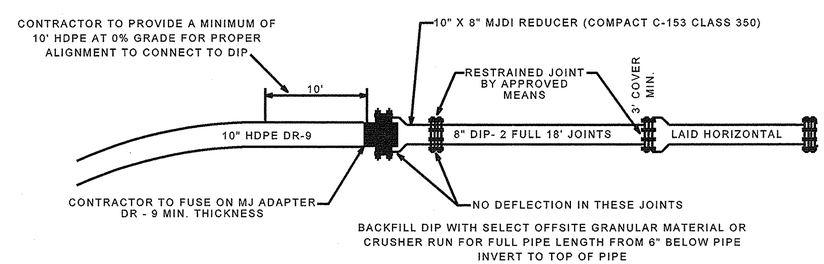

RESTRAINT DETAIL 10" HDPE X 8" DIP
NOT TO SCALE

REVISIONS

8/17/99

$$$$$$SYSTIME$$$$$$
$$$$$$USERNAME$$$$$$
$$$$$$DGN$$$$$$

8/17/99

REVISIONS

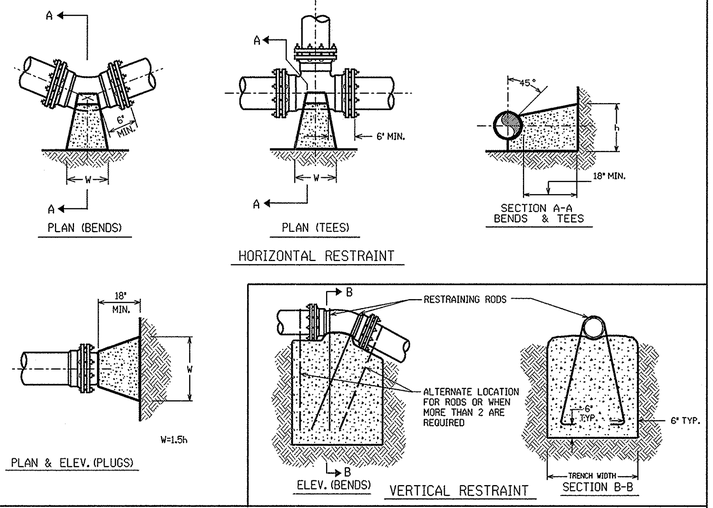

THRUST RESTRAINT FOR PIPE LINES

BASED ON TEST PRESSURE OF 200 P.S.I.

HORIZONTAL RESTRAINT
(ALL AREAS GIVEN ARE IN SQUARE FEET)

PIPE SIZE	DEGREE OF BEND	LBS. STATIC THRUST •	ALLOWABLE SOIL BEARING (PSF) 1000	2000	3000	4000	5000	6000	7000	8000
4"	11 1/4°	816	1	1	1	1	1	1	1	1
	22 1/2°	1,626	1	1	1	1	1	1	1	1
	45°	2,405	2	1	1	1	1	1	1	1
	90°	4,444	4	2	1	1	1	1	1	1
	TEE/PLUG	3,143	3	2	1	1	1	1	1	1
6"	11 1/4°	1,385	2	1	1	1	1	1	1	1
	22 1/2°	2,758	3	2	1	1	1	1	1	1
	45°	5,409	5	3	2	2	1	1	1	1
	90°	9,999	10	5	3	3	2	2	2	1
	TEE/PLUG	7,068	7	4	3	2	2	1	1	1
8"	11 1/4°	2,438	3	1	1	1	1	1	1	1
	22 1/2°	4,904	5	3	2	1	1	1	1	1
	45°	9,618	10	5	3	2	2	2	2	1
	90°	17,773	18	9	6	4	4	3	3	2
	TEE/PLUG	12,568	13	6	4	3	3	2	2	2
10"	11 1/4°	3,846	4	2	2	1	1	1	1	1
	22 1/2°	7,661	8	4	3	2	2	2	1	1
	45°	15,028	15	8	5	4	3	3	2	2
	90°	27,768	28	14	9	7	6	5	4	3
	TEE/PLUG	19,635	20	10	7	5	4	3	3	2
12"	11 1/4°	5,543	6	3	2	2	1	1	1	1
	22 1/2°	11,032	11	6	4	3	2	2	2	2
	45°	21,641	22	11	7	5	4	4	3	3
	90°	39,987	40	20	13	10	8	7	6	5
	TEE/PLUG	28,274	28	14	9	7	6	5	4	4
14"	11 1/4°	7,542	8	4	3	2	2	2	1	1
	22 1/2°	15,016	15	8	5	4	3	3	2	2
	45°	29,455	29	15	10	7	6	5	4	4
	90°	54,426	54	27	18	14	11	9	8	7
	TEE/PLUG	38,485	38	19	13	10	8	6	5	5
16"	11 1/4°	9,854	10	5	3	3	2	2	2	2
	22 1/2°	19,612	20	10	7	5	4	3	3	3
	45°	38,471	38	17	13	10	8	6	5	5
	90°	71,085	71	36	24	18	14	12	10	9
	TEE/PLUG	50,265	50	25	17	13	10	8	7	6

• INCLUDES 1.25 SAFETY FACTOR

VERTICAL RESTRAINT
(ALL VOLUMES GIVEN ARE IN CUBIC YARDS)••

PIPE SIZE	RESTRAINING RODS NO.REQ'D	DIA.	DEGREE OF BEND 11 1/4°	22 1/2°	45°
4"	2	1/2"	0.25	0.50	0.75
6"	2	1/2"	0.50	1.0	1.75
8"	2	5/8"	0.75	1.50	3.0
10"	2	3/4"	1.25	2.25	4.50
12"	2	7/8"	1.75	3.25	6.50
14"	4	5/8"	2.25	4.50	8.75
16"	4	3/4"	3.0	6.0	11.50

••INCLUDES 1.50 SAFETY FACTOR

GENERAL NOTES:
1. CONCRETE SHALL BE CLASS "B".
2. CONCRETE SHALL NOT CONTACT BOLTS ENDS OF MECHANICAL JOINT FITTINGS.
3. CONSULT WITH ENGINEER FOR CONCRETE REQUIREMENTS ON MAINS LARGER THAN 16 INCHES. (FOR VERTICAL & HORIZONTAL BENDS)
4. ALLOWABLE SOIL BEARING SHALL BE DETERMINED BY THE ENGINEER.

REVISIONS		
NO.	DATE	DESCRIPTION

THRUST RESTRAINT FOR WATER MAINS

STATE OF NORTH CAROLINA
DIVISION OF HIGHWAYS
RALEIGH, N.C.

RESTRAINED JOINT TABLE FOR 8" PVC PIPE

FITTING	REQUIRED RESTRAINED LENGTH (FT) OF PVC PIPE BY DEPTH OF COVER							
HORIZONTAL BENDS	**3 FT**	**4 FT**	**5 FT**	**6 FT**	**7 FT**	**8 FT**	**9 FT**	**10 FT**
8 INCH DIA - 11.25 DEG	3	3	3	2	2	2	2	2
8 INCH DIA - 22.5 DEG	6	5	5	4	4	4	3	3
8 INCH DIA - 45 DEG	12	11	9	8	7	7	6	6
8 INCH DIA - 90 DEG	29	25	22	19	17	16	14	13
VERTICAL DOWN BENDS	**3 FT**	**4 FT**	**5 FT**	**6 FT**	**7 FT**	**8 FT**	**9 FT**	**10 FT**
8 INCH DIA - 11.25 DEG	11	9	8	7	6	5	5	5
8 INCH DIA - 22.5 DEG	22	18	15	13	12	11	10	9
8 INCH DIA - 45 DEG	45	37	31	27	24	21	19	18
VERTICAL UP BENDS	**3 FT**	**4 FT**	**5 FT**	**6 FT**	**7 FT**	**8 FT**	**9 FT**	**10 FT**
8 INCH DIA - 11.25 DEG	3	3	3	2	2	2	2	2
8 INCH DIA - 22.5 DEG	6	5	5	4	4	4	3	3
8 INCH DIA - 45 DEG	12	11	9	8	7	7	6	6
DEAD ENDS / VALVES	**3 FT**	**4 FT**	**5 FT**	**6 FT**	**7 FT**	**8 FT**	**9 FT**	**10 FT**
8 INCH DIA	83	71	62	55	49	45	41	38
REDUCERS	**3 FT**	**4 FT**	**5 FT**	**6 FT**	**7 FT**	**8 FT**	**9 FT**	**10 FT**
10 INCH X 8 INCH	34	29	25	22	20	18	17	16
8 INCH X 6 INCH	35	30	26	23	21	19	17	16
TEES	**3 FT**	**4 FT**	**5 FT**	**6 FT**	**7 FT**	**8 FT**	**9 FT**	**10 FT**
8" RUN X 8" BRANCH : RL = 1 FT	77	65	56	49	43	39	35	32
8" RUN X 8" BRANCH : RL = 5 FT	51	40	31	24	19	14	11	8
8" RUN X 6" BRANCH : RL = 1 FT	55	46	39	34	29	26	23	21
8" RUN X 6" BRANCH : RL = 5 FT	22	13	7	2	1	1	1	1
8" RUN X 4" BRANCH : RL = 1 FT	33	26	22	18	15	13	11	9
8" RUN X 4" BRANCH : RL = 5 FT	1	1	1	1	1	1	1	1

ASSUMPTIONS

LAYING PIPE CONDITION = TYPE 4
SOIL DESIGNATION = ML WITH GRANULAR BACKFILL
DESIGN PRESSURE = 200 PSI (TEST PRESSURE)
SAFETY FACTOR = 1.5

NOTES:

1. RL = RUN LENGTH BETWEEN FIRST JOINTS OF PIPE ALONG THE RUN OF TEE.
2. RESTRAINED LENGTH IS MEASURED AS FOLLOWS:
   A. HORIZONTAL/VERTICAL BENDS: ALONG EACH SIDE OF BEND
   B. HORIZONTAL/VERTICAL BENDS - OFFSETS: ALONG THE OTHER SIDE OF EACH BEND. ALL PIPE BETWEEN THE TWO BENDS SHALL BE RESTRAINED JOINT.
   C. DEAD ENDS: ALONG PIPE FROM THE PLUG.
   D. VALVES: ALONG THE PIPE IN EACH DIRECTION FROM THE VALVE.
   E. TEES: ALONG THE BRANCH PIPE FROM THE TEE.
3. WHEN IT IS NOT POSSIBLE TO INSTALL RESTRAINED LENGTHS AS NOTED BY THIS TABLE, THE CONTRACTOR SHALL INSTALL THE APPROPRIATE CONCRETE THRUST RESTRAINTS AS PER THE DETAILS HEREIN.
4. MINIMUM COVER OVER PVC PIPE IS 3 FEET.
5. FITTINGS SHALL BE DUCTILE IRON.
6. JOINT RESTRAINT SHALL BE BELL RESTRAINT CLAMPS, SUCH AS MEGALUG OR APPROVED EQUAL.

PROJECT REFERENCE NO.	SHEET NO.
17BP.8.R.41	UC-3B

NORTH CAROLINA PROFESSIONAL SEAL 042266 ENGINEER KEVIN C. ZOBEL

2012-OCT-17

MA Engineering CONSULTANTS, INC.
598 East Chatham Street Suite 137 Cary, NC 27511
Phone: 919.297.0220 Fax: 919.297.0221

$$$$SYSTIME$$$$ $$$$DSN$$$$ $$$$USERNAME$$$$

NOTE:
1. INSTALL WATER LINE 5 FEET FROM R/W LINE TYPICAL.
2. INSTALL WATER LINE 3 FEET MINIMUM COVER TO FINAL GRADE.
3. PIPE FOR TRENCHLESS INSTALLATION SHALL BE 10" DUCTILE IRON PIPE HDPE DR-9 PE 3608 DR-9.
4. ALL PIPE FOR OPEN TRENCH CONSTRUCTION SHALLED BE DUCTILE IRON CLASS 50, RESTRAINED JOINT CONSTRUCTION.
5. SEE RESTRAINT DETAIL ON SHEET UC-3A FOR TRANSITION FROM HDPE PIPE TO DUCTILE IRON PIPE

UTILITY OWNERS ON THIS PROJECT:

1. CITY OF SANFORD
UTILITY: 8" WATER LINE
CONTACT: PAUL WEEKS JR., PE
PHONE: 919-775-8010

PROJECT REFERENCE NO.	SHEET NO.
17BP.8.R.41	UC-4

UTILITY DESIGN ENGINEER

NORTH CAROLINA PROFESSIONAL SEAL 027661 ENGINEER KEVIN C. ZDEB

2012-OCT-17

MA Engineering CONSULTANTS, INC. 598 E. Chatham Street, Suite 137 Cary, N. C. 27511

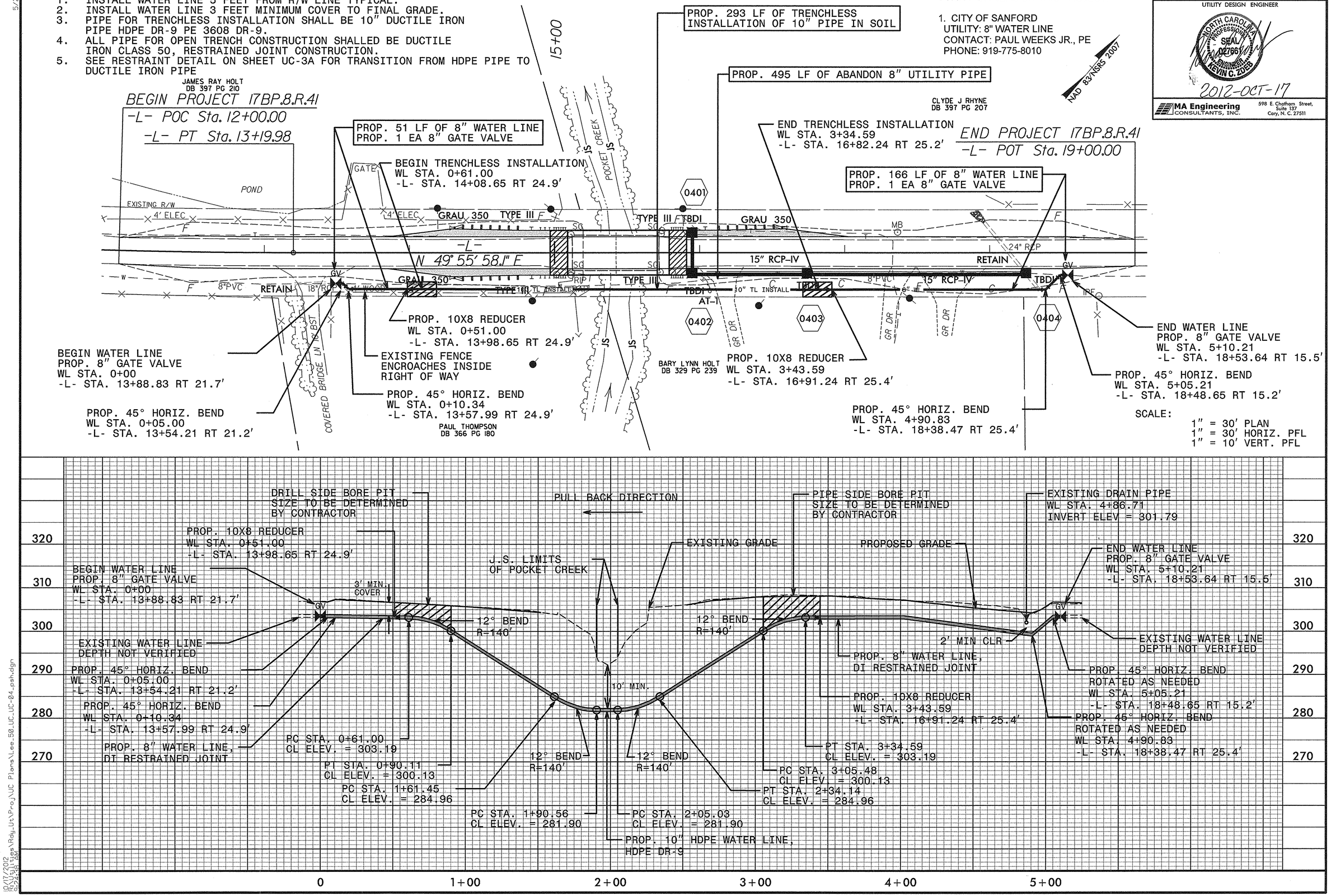

5/28/99

10/17/2012 R:\Utilities\Rdy_Ut\Proj\UC Plans\Lee_50_UC_UC-04_psh.dgn 9:24:38 AM

09/08/99

TIP PROJECT: 17BP.8.R.41

CONTRACT:

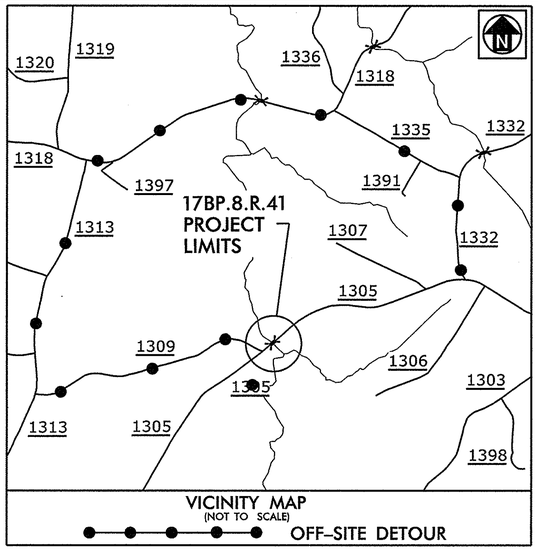

STATE OF NORTH CAROLINA
DIVISION OF HIGHWAYS

T.I.P. NO.	SHEET NO.
17BP.8.R.41	UO-1

UTILITIES BY OTHERS PLANS
LEE COUNTY

LOCATION: BRIDGE NO.50 OVER POCKET CREEK ON SR 1305 (HENLEY ROAD)

TYPE OF WORK: UTILITY BY OTHERS RELOCATION

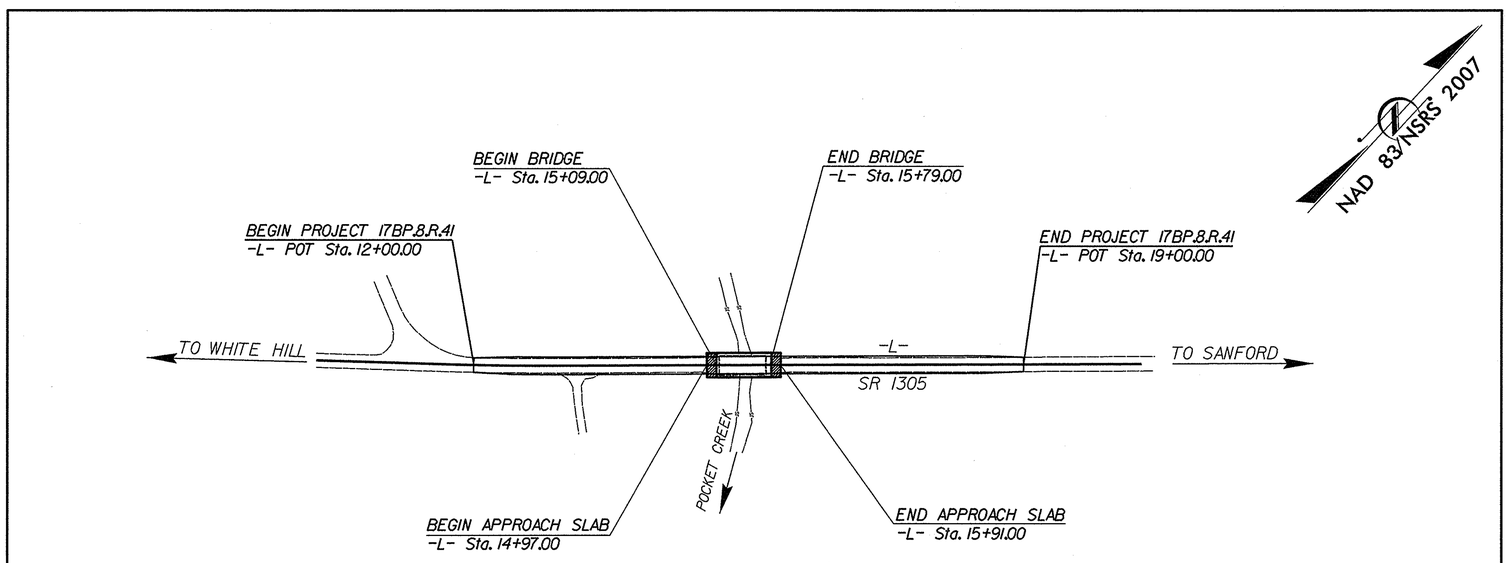

GRAPHIC SCALES

50 25 0 50 100
PLANS

50 25 0 50 100
PROFILE (HORIZONTAL)

10 5 0 10 20
PROFILE (VERTICAL)

INDEX OF SHEETS

SHEET NO.	*DESCRIPTION*
UO-1	*TITLE SHEET*
UO-2	*PLAN SHEET*

UTILITY OWNERS ON PROJECT

(1) WATER – CITY OF SANFORD

(2) TELEPHONE – WINDSTREAM

(3) POWER – PROGRESS ENERGY

(4) CABLE – CHARTER COMMUNICATION

UTILITY DESIGN BY:
MA Engineering
CONSULTANTS, INC.
598 East Chatham Street Suite 137 Cary, NC 27511
Phone: 919 297 0220 Fax: 919 297 0221

NCDOT PROJECT ENGINEER:
TIMOTHY WELCH, P.E.

PREPARED FOR:
NORTH CAROLINA
DEPARTMENT OF TRANSPORTATION
DIVISION 8 BRIDGE PROGRAM

$$$$$$SYSTIME$$$$$$
$$$$$$$$$$$$$$$$DGN$$$$$$$$$$$$$$$$$$$$
$$$$USERNAME$$$$

PROJECT REFERENCE NO.	SHEET NO.
17BP.8.R.41	U0-2

UTILITIES BY OTHERS

NOTE:
ALL PROPOSED UTILITY WORK SHOWN ON THIS SHEET WILL BE DONE BY OTHERS

MA Engineering CONSULTANTS, INC.
598 East Chatham Street Suite 137 Cary, NC 27511
Phone: 919.297.0220 Fax: 919.297.0221

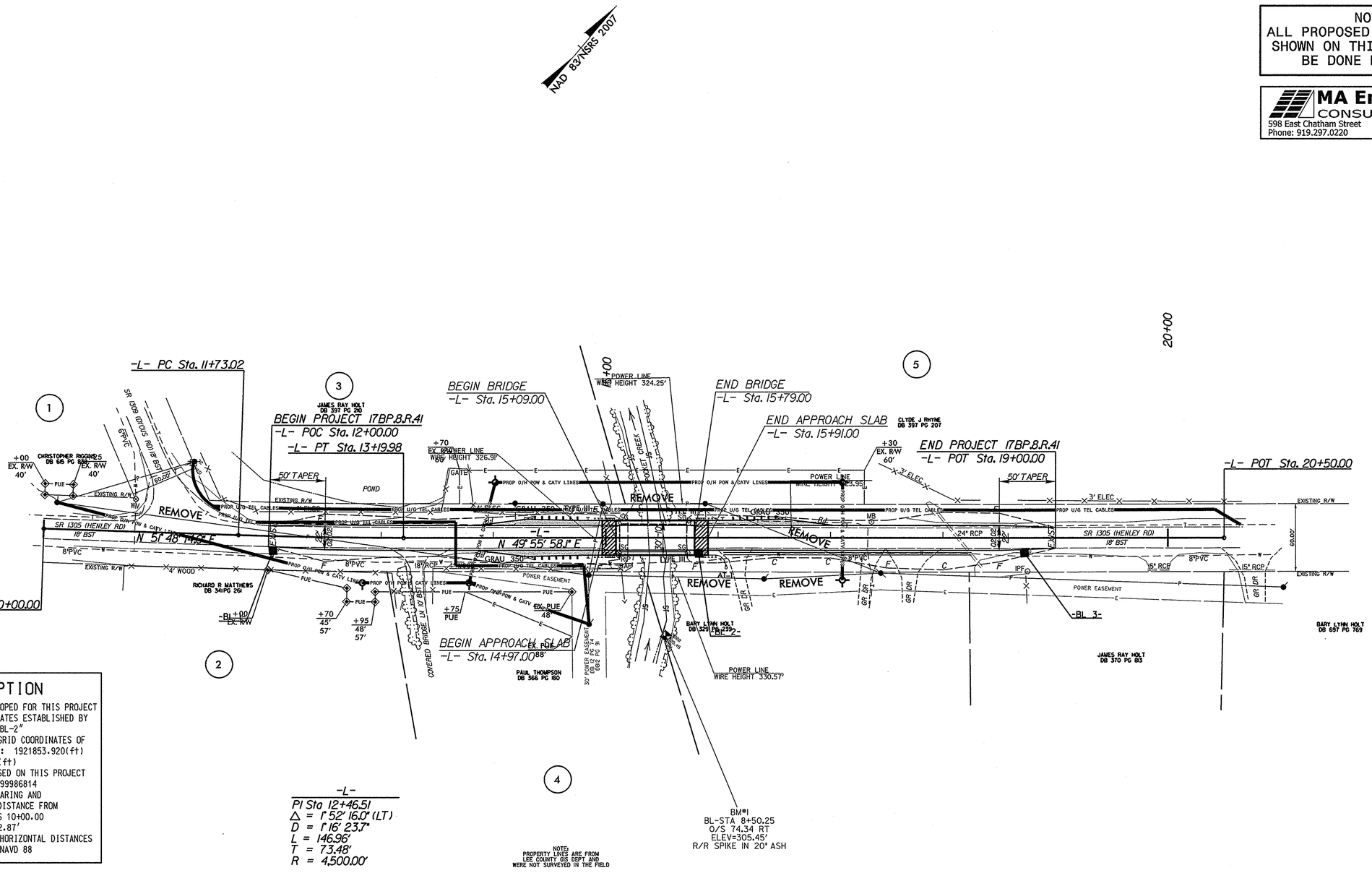

DATUM DESCRIPTION

THE LOCALIZED COORDINATE SYSTEM DEVELOPED FOR THIS PROJECT IS BASED ON THE STATE PLANE COORDINATES ESTABLISHED BY OTHERS FOR MONUMENT "BL-2"
WITH NAD 83/NSRS 2007 STATE PLANE GRID COORDINATES OF
NORTHING: 614391.582(ft) EASTING: 1921853.920(ft)
ELEVATION: 306.299(ft)
THE AVERAGE COMBINED GRID FACTOR USED ON THIS PROJECT (GROUND TO GRID) IS: 0.99986814
THE N.C. LAMBERT GRID BEARING AND LOCALIZED HORIZONTAL GROUND DISTANCE FROM "BL-2" TO -L- STATION IS 10+00.00
N 52° 02' 53.62" E 582.87'
ALL LINEAR DIMENSIONS ARE LOCALIZED HORIZONTAL DISTANCES
VERTICAL DATUM USED IS NAVD 88

-L-
PI Sta 12+46.51
Δ = 1° 52' 16.0" (LT)
D = 1° 16' 23.7"
L = 146.96'
T = 73.48'
R = 4,500.00'

NOTE:
PROPERTY LINES ARE FROM LEE COUNTY GIS DEPT AND WERE NOT SURVEYED IN THE FIELD

10/16/2012
R:\Utilities\Rdy_Ut\Proj\UBO Plans\Lee_50_UBO-U0-02_psh.dgn
5:14:09 PM

PROJ. REFERENCE NO.	SHEET NO.
17BP.8.R.41	X-1
LEE #50	

0 5 10

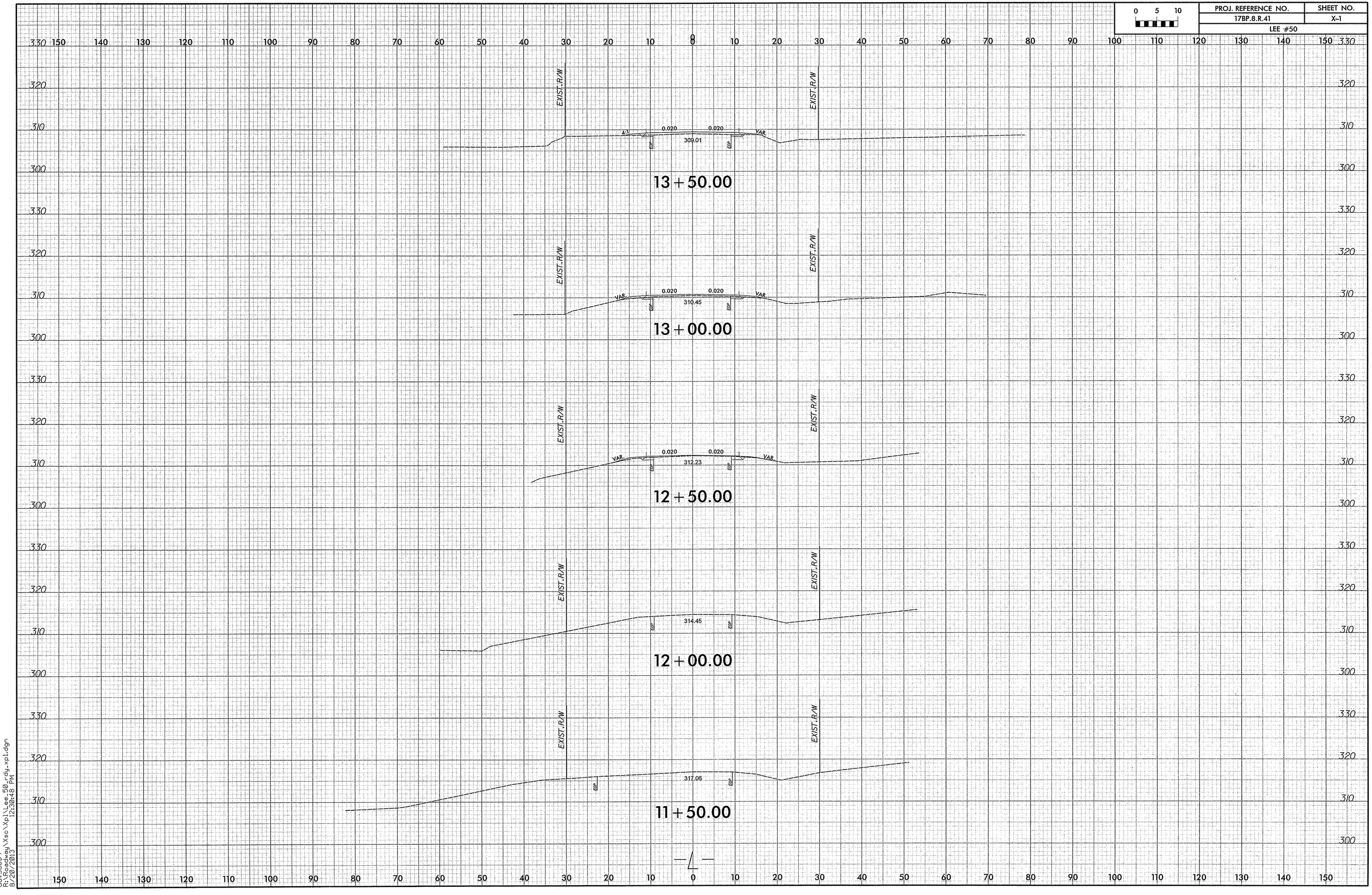

dev56859
R:\Roadway\Xsc\Xpl\Lee_50_rdy_xpl.dgn
8/20/2013 12:30:48 PM

0 5 10	PROJ. REFERENCE NO.	SHEET NO.
	17BP.8.R.41	X-2
	LEE #50	

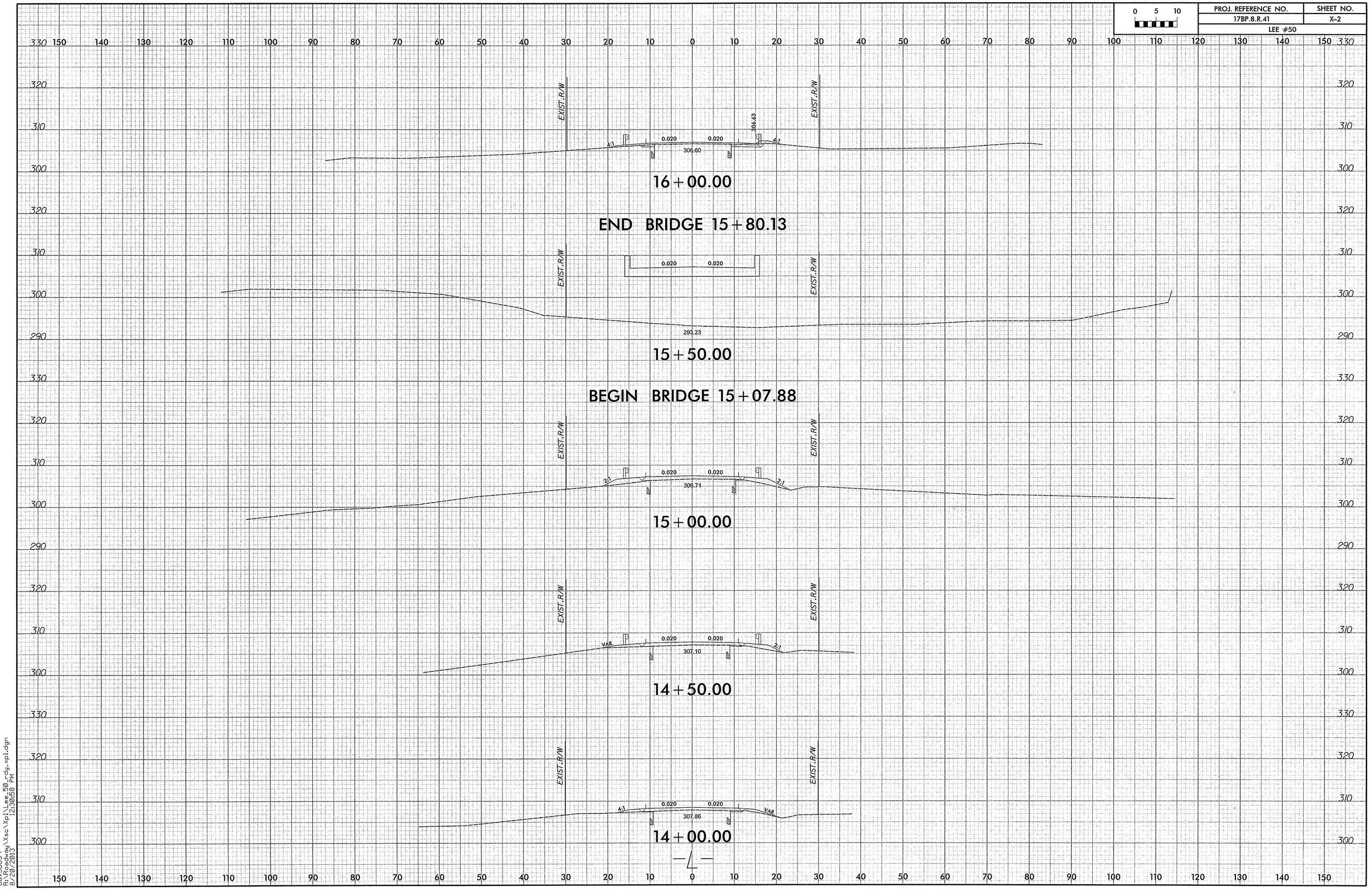

dev56859
R:\Roadway\Xsc\Xpl\Lee_50_rdy_xpl.dgn
8/20/2013 12:30:58 PM

0 5 10	PROJ. REFERENCE NO.	SHEET NO.
	17BP.8.R.41	X-3
	LEE #50	

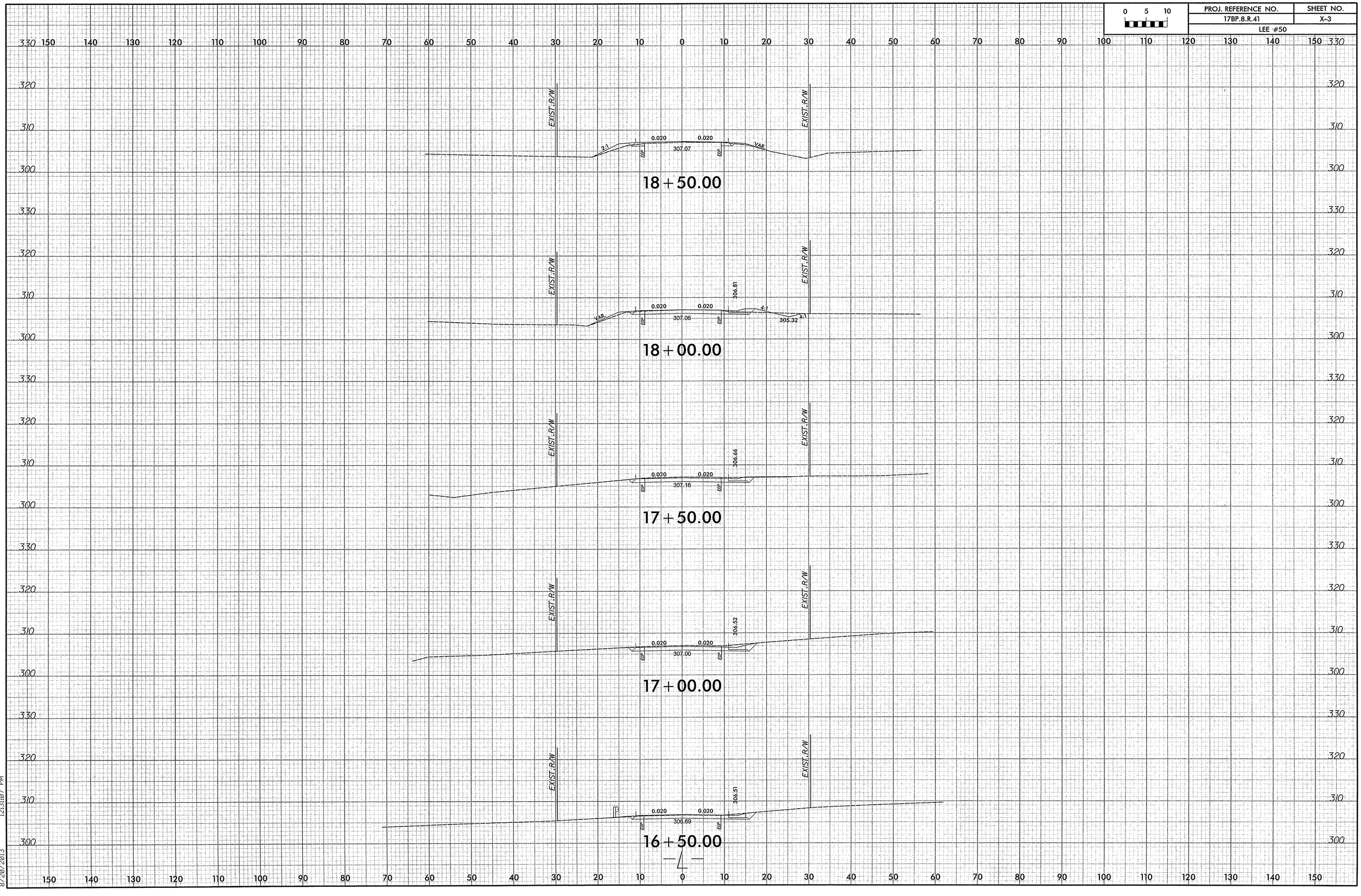

dw:56859
R:\Roadway\Xsc\Xpl\Lee_50_rdy_xpl.dgn
8/20/2013
12:31:07 PM

0 5 10	PROJ. REFERENCE NO.	SHEET NO.
	17BP.8.R.41	X-4
	LEE #50	

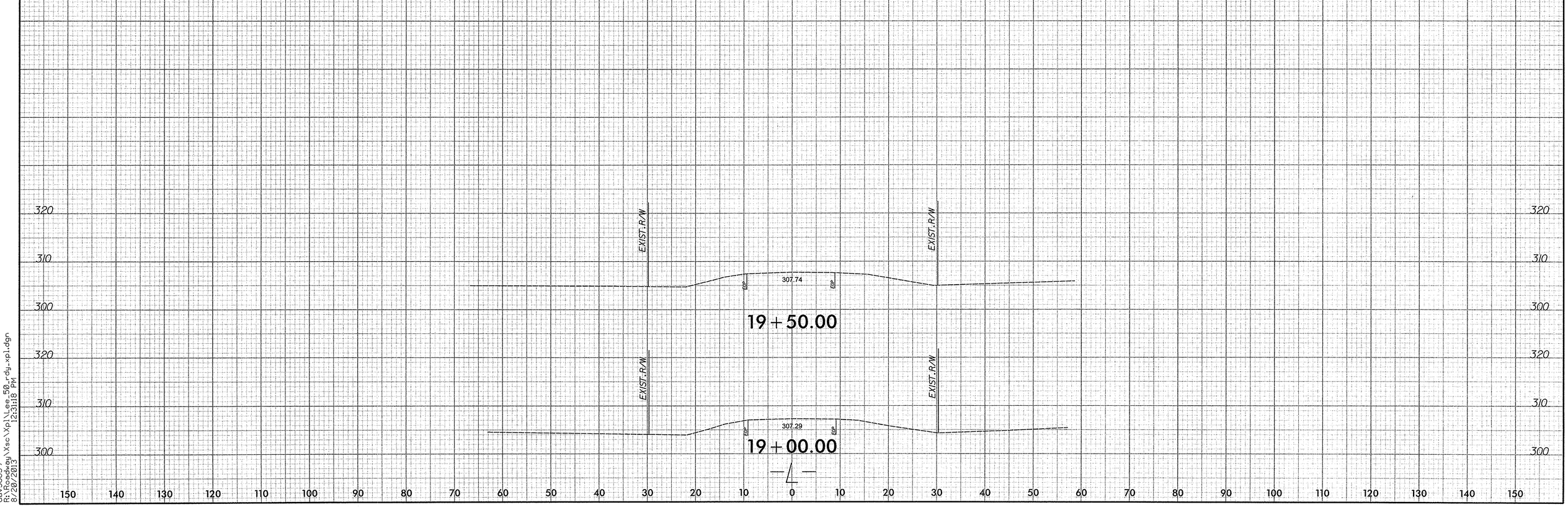

dav56859
R:\Roadway\Xsc\Xp1\Lee_50_rdy_xp1.dgn
8/20/2013 12:31:18 PM

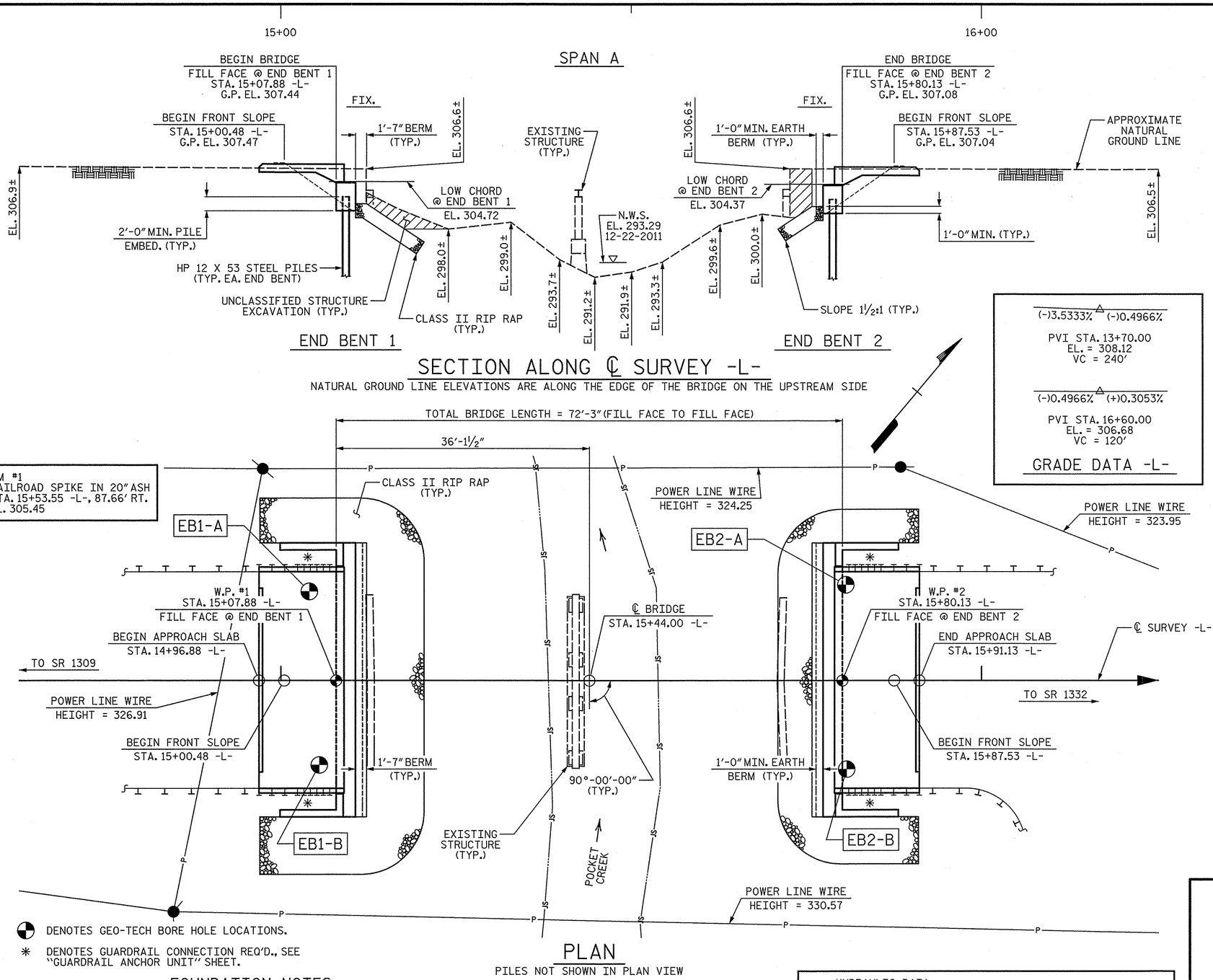

SECTION ALONG ℄ SURVEY -L-

NATURAL GROUND LINE ELEVATIONS ARE ALONG THE EDGE OF THE BRIDGE ON THE UPSTREAM SIDE

(-)3.5333% (-)0.4966%

PVI STA. 13+70.00
EL. = 308.12
VC = 240'

(-)0.4966% (+)0.3053%

PVI STA. 16+60.00
EL. = 306.68
VC = 120'

GRADE DATA -L-

PLAN

PILES NOT SHOWN IN PLAN VIEW

● DENOTES GEO-TECH BORE HOLE LOCATIONS.

✱ DENOTES GUARDRAIL CONNECTION REQ'D., SEE "GUARDRAIL ANCHOR UNIT" SHEET.

NOTES:

ASSUMED LIVE LOAD = HL-93 OR ALTERNATE LOADING.

FOR OTHER DESIGN DATA AND GENERAL NOTES, SEE SHEET SN.

FOR EROSION CONTROL MEASURES SEE EROSION CONTROL PLANS.

THIS BRIDGE HAS BEEN DESIGNED IN ACCORDANCE WITH THE AASHTO LRFD BRIDGE DESIGN SPECIFICATIONS.

THIS BRIDGE IS LOCATED IN SEISMIC ZONE 1.

REMOVAL OF THE EXISTING BRIDGE SHALL BE PERFORMED SO AS NOT TO ALLOW DEBRIS TO FALL INTO THE WATER. THE CONTRACTOR SHALL REMOVE THE BRIDGE AND SUBMIT PLANS FOR DEMOLITION IN ACCORDANCE WITH ARTICLE 402-2 OF THE STANDARD SPECIFICATIONS.

THE MATERIAL SHOWN IN THE CROSS-HATCHED AREA SHALL BE EXCAVATED FOR A DISTANCE OF 25 FT. EACH SIDE OF CENTERLINE ROADWAY AS DIRECTED BY THE ENGINEER. THIS WORK WILL BE PAID FOR AT THE CONTRACT LUMP SUM PRICE FOR UNCLASSIFIED STRUCTURE EXCAVATION. SEE SECTION 412 OF THE STANDARD SPECIFICATIONS.

THE EXISTING STRUCTURE CONSISTING OF 2 SPANS @ 30'-5" WITH A TIMBER DECK ON STEEL FLOOR BEAM SYSTEM WITH A CLEAR ROADWAY WIDTH OF 24.2' ON END BENTS CONSISTING OF TIMBER CAP AND PILES WITH STEEL CRUTCHES AND INTERIOR BENT CONSISTING OF STEEL CAP AND POSTS WITH CONCRETE SILL AND FOOTING. THE EXISTING STRUCTURE IS LOCATED AT THE SITE OF THE PROPOSED STRUCTURE AND SHALL BE REMOVED. THE EXISTING BRIDGE IS PRESENTLY POSTED BELOW THE LEGAL LOAD LIMIT. SHOULD THE STRUCTURAL INTEGRITY OF THE BRIDGE FURTHER DETERIORATE, THIS LOAD LIMITATION MAY BE REDUCED AS FOUND NECESSARY DURING THE LIFE OF THE PROJECT.

THE SUBSTRUCTURE OF THE EXISTING BRIDGE INDICATED ON THE PLANS IS FROM THE BEST INFORMATION AVAILABLE. SINCE THIS INFORMATION IS SHOWN FOR THE CONVENIENCE OF THE CONTRACTOR, THE CONTRACTOR SHALL HAVE NO CLAIM WHATSOEVER AGAINST THE DEPARTMENT OF TRANSPORTATION FOR ANY DELAYS OR ADDITIONAL COST INCURRED BASED ON DIFFERENCES BETWEEN THE EXISTING BRIDGE SUBSTRUCTURE SHOWN ON THE PLANS AND THE ACTUAL CONDITIONS AT THE PROJECT SITE.

THIS STRUCTURE HAS BEEN DESIGNED IN ACCORDANCE WITH HEC 18, "EVALUATING SCOUR AT BRIDGES".

FOR SUBMITTAL OF WORKING DRAWINGS, SEE SPECIAL PROVISIONS.

FOR FALSEWORK AND FORMWORK, SEE SPECIAL PROVISIONS.

FOR CRANE SAFETY, SEE SPECIAL PROVISIONS.

FOR GROUT FOR STRUCTURES, SEE SPECIAL PROVISIONS.

ASPHALT WEARING SURFACE IS INCLUDED IN ROADWAY QUANTITY ON ROADWAY PLANS.

THE CONTRACTOR SHALL PROVIDE INDEPENDENT ASSURANCE SAMPLES OF REINFORCING STEEL AS FOLLOWS: FOR PROJECTS REQUIRING UP TO 400 TONS OF REINFORCING STEEL, ONE 30 INCH SAMPLE OF EACH SIZE BAR USED, AND FOR PROJECTS REQUIRING OVER 400 TONS OF REINFORCING STEEL, TWO 30 INCH SAMPLES OF EACH SIZE BAR USED. THE BARS FROM WHICH THE SAMPLES ARE TAKEN MUST THEN BE SPLICED WITH REPLACEMENT BARS OF THE SIZE AND LENGTH OF THE SAMPLE, PLUS A MINIMUM LAP SPLICE OF THIRTY BAR DIAMETERS. PAYMENT FOR THE SAMPLES OF REINFORCING STEEL SHALL BE CONSIDERED INCIDENTAL TO VARIOUS PAY ITEMS.

INASMUCH AS THE PAINT SYSTEM ON THE EXISTING STRUCTURAL STEEL CONTAINS LEAD, THE CONTRACTOR'S ATTENTION IS DIRECTED TO ARTICLE 107-1 OF THE STANDARD SPECIFICATIONS. ANY COSTS RESULTING FROM COMPLIANCE WITH APPLICABLE STATE OR FEDERAL REGULATIONS PERTAINING TO HANDLING OF MATERIALS CONTAINING LEAD BASED PAINT SHALL BE INCLUDED IN THE BID PRICE FOR "REMOVAL OF EXISTING STRUCTURE AT STATION 15+44.00 -L-."

FOR ALASKA RAIL-CURB MOUNTED, SEE SPECIAL PROVISIONS.

FOUNDATION NOTES:

FOR PILES, SEE SECTION 450 OF THE STANDARD SPECIFICATIONS.

PILES AT END BENT 1 ARE DESIGNED FOR A FACTORED RESISTANCE OF 85 TONS PER PILE.

DRIVE PILES AT END BENT 1 TO A REQUIRED DRIVING RESISTANCE OF 145 TONS PER PILE.

PILES AT END BENT 2 ARE DESIGNED FOR A FACTORED RESISTANCE OF 85 TONS PER PILE.

DRIVE PILES AT END BENT 2 TO A REQUIRED DRIVING RESISTANCE OF 145 TONS PER PILE.

PILE EXCAVATION IS REQUIRED TO INSTALL PILES AT END BENT 2. EXCAVATE HOLES AT PILE LOCATIONS TO ELEVATION 290.3 FT. FOR PILE EXCAVATION, SEE SECTION 450 OF THE STANDARD SPECIFICATIONS.

STEEL H-PILE POINTS ARE REQUIRED FOR STEEL H-PILES AT END BENT 1 & 2. FOR STEEL PILE POINTS, SEE SECTION 450 OF THE STANDARD SPECIFICATIONS.

CONCRETE IS REQUIRED TO FILL HOLES FOR PILE EXCAVATION AT END BENT 2.

HYDRAULIC DATA:

DESIGN DISCHARGE	= 2220 CFS
FREQUENCY OF DESIGN FLOOD	= 25 YEAR
DESIGN HIGH WATER ELEVATION	= 303.70
DRAINAGE AREA	= 10.4 SQ. MI.
BASE DISCHARGE (Q 100)	= 3120 CFS
BASE HIGH WATER ELEVATION	= 305.48

OVERTOPPING FLOOD DATA:

OVERTOPPING DISCHARGE	= 4200+ CFS
FREQUENCY OF OVERTOPPING FLOOD	= 500+ YEAR
OVERTOPPING FLOOD ELEVATION	= 306.80

I HEREBY CERTIFY THESE PLANS ARE THE AS-BUILT PLANS

PROJECT NO. 17BP.8.R.41

LEE COUNTY

STATION: 15+44.00 -L-

REPLACES BRIDGE #50

PLANS PREPARED BY:

SIMPSON ENGINEERS & ASSOCIATES

5640 Dillard Drive
Suite 200
Cary, NC 27518
(919) 852-0468
(919) 852-0598 (Fax)
www.simpsonengr.com

LICENSURE NO. C-2521

NORTH CAROLINA PROFESSIONAL SEAL 11268 ENGINEER BETSY S. COX — 8-14-13

STATE OF NORTH CAROLINA
DEPARTMENT OF TRANSPORTATION
RALEIGH

GENERAL DRAWING

FOR BRIDGE ON SR 1305 (HENLEY RD.) OVER POCKET CREEK BETWEEN SR 1309 AND SR 1332

29'-6" CLEAR ROADWAY - 90° SKEW

REVISIONS						SHEET NO.
NO.	BY:	DATE:	NO.	BY:	DATE:	S-1
1			3			TOTAL SHEETS
2			4			16

PROJ:17BP.8.R.41

DRAWN BY : T. BANKOVICH DATE : 8-13
CHECKED BY : B.S. COX DATE : 8-13

8/14/2013 10:48:56 AM G:\Projects\2012\17BP.8.R.41 (Lee 50)\Structures\Drawings\FinalNee50_sd_NEW_gd_8-13-2013.dgn

TOTAL BILL OF MATERIAL

	REMOVAL OF EXISTING STRUCTURE	PILE EXCAVATION IN SOIL	PILE EXCAVATION NOT IN SOIL	UNCLASSIFIED STRUCTURE EXCAVATION	CLASS A CONCRETE	BRIDGE APPROACH SLABS	REINFORCING STEEL	HP 12 X 53 STEEL PILES		STEEL PILE POINTS	1'-8" X 1'-0" CONCRETE PARAPET	RIP RAP CLASS II (2'-0" THICK)	GEOTEXTILE FOR DRAINAGE	ELASTOMERIC BEARINGS	3'-0" X 2'-0" PRESTRESSED CONCRETE CORED SLABS		ALASKA RAIL-CURB MOUNTED
	LUMP SUM	LIN. FT.	LIN. FT.	LUMP SUM	CU. YDS.	LUMP SUM	LBS.	NO.	LIN. FT.	EACH	LIN. FT.	TONS	SQ. YDS.	LUMP SUM	NO.	LIN. FT.	LIN. FT.
SUPERSTRUCTURE											140.00				11	770.00	125.00
END BENT 1					21.9		2,660	7	105	7		120	135				
END BENT 2		35	35		21.9		2,660	7	70	7		90	100				
TOTAL	LUMP SUM	35	35	LUMP SUM	43.8	LUMP SUM	5,320	14	175	14	140.00	210	235	LUMP SUM	11	770.00	125.00

8/14/2013 10:48:56 AM G:\Projects\2012\17BP.8.R.41 (Lee 50)\Structures\Drawings\Final\lee50_sd_NEW_gd_8-13-2013.dgn

DRAWN BY : T. BANKOVICH DATE : 8-13
CHECKED BY : B.S. COX DATE : 8-13

PLANS PREPARED BY:
SIMPSON ENGINEERS & ASSOCIATES
5640 Dillard Drive
Suite 200
Cary, NC 27518
(919) 852-0468
(919) 852-0598 (Fax)
www.simpsonengr.com
LICENSURE NO. C-2521

NORTH CAROLINA PROFESSIONAL SEAL 11268 ENGINEER BETSY S. COX
10/13

PROJECT NO. 17BP.8.R.41
LEE COUNTY
STATION: 15+44.00 -L-

STATE OF NORTH CAROLINA
DEPARTMENT OF TRANSPORTATION
RALEIGH

BILL OF MATERIAL

REVISIONS						SHEET NO.
NO.	BY:	DATE:	NO.	BY:	DATE:	S-2
1			3			TOTAL SHEETS
2			4			16

LOAD AND RESISTANCE FACTOR RATING (LRFR) SUMMARY FOR PRESTRESSED CONCRETE GIRDERS

LEVEL		VEHICLE	WEIGHT (W) (TONS)	CONTROLLING LOAD RATING	MINIMUM RATING FACTORS (RF)	TONS = W X RF	STRENGTH I LIMIT STATE										SERVICE III LIMIT STATE						COMMENT NUMBER
								MOMENT					SHEAR					MOMENT						
							LIVELOAD FACTORS	DISTRIBUTION FACTORS (DF)	RATING FACTOR	SPAN	GIRDER LOCATION	DISTANCE FROM LEFT END OF SPAN (ft)	DISTRIBUTION FACTORS (DF)	RATING FACTOR	SPAN	GIRDER LOCATION	DISTANCE FROM LEFT END OF SPAN (ft)	LIVELOAD FACTORS	DISTRIBUTION FACTORS (DF)	RATING FACTOR	SPAN	GIRDER LOCATION	DISTANCE FROM LEFT END OF SPAN (ft)	
DESIGN LOAD RATING		HL-93(Inv)	N/A	**1**	1.006	--	1.75	0.273	1.03	70′	EL	34.5	0.507	1.32	70′	EL	6.9	0.80	0.273	**1.01**	70′	EL	**34.5**	
		HL-93(Opr)	N/A	--	1.341	--	1.35	0.273	1.34	70′	EL	34.5	0.507	1.72	70′	EL	6.9	N/A	--	--	--	--	--	
		HS-20(Inv)	36.000	**2**	1.306	47.02	1.75	0.273	1.34	70′	EL	34.5	0.507	1.65	70′	EL	6.9	0.80	0.273	**1.31**	70′	EL	**34.5**	
		HS-20(Opr)	36.000	--	1.74	62.64	1.35	0.273	1.74	70′	EL	34.5	0.507	2.14	70′	EL	6.9	N/A	--	--	--	--	--	
LEGAL LOAD RATING	SV	SNSH	13.500	--	2.917	39.379	1.4	0.273	3.75	70′	EL	34.5	0.507	4.87	70′	EL	6.9	0.80	0.273	2.92	70′	EL	34.5	
		SNGARBS2	20.000	--	2.187	43.741	1.4	0.273	2.81	70′	EL	34.5	0.507	3.47	70′	EL	6.9	0.80	0.273	2.19	70′	EL	34.5	
		SNAGRIS2	22.000	--	2.077	45.69	1.4	0.273	2.67	70′	EL	34.5	0.507	3.23	70′	EL	6.9	0.80	0.273	2.08	70′	EL	34.5	
		SNCOTTS3	27.250	--	1.452	39.565	1.4	0.273	1.87	70′	EL	34.5	0.507	2.43	70′	EL	6.9	0.80	0.273	1.45	70′	EL	34.5	
		SNAGGRS4	34.925	--	1.218	42.554	1.4	0.273	1.57	70′	EL	34.5	0.507	2.03	70′	EL	6.9	0.80	0.273	1.22	70′	EL	34.5	
		SNS5A	35.550	--	1.191	42.346	1.4	0.273	1.53	70′	EL	34.5	0.507	2.06	70′	EL	6.9	0.80	0.273	1.19	70′	EL	34.5	
		SNS6A	39.950	--	1.095	43.747	1.4	0.273	1.41	70′	EL	34.5	0.507	1.88	70′	EL	6.9	0.80	0.273	1.10	70′	EL	34.5	
		SNS7B	42.000	--	1.043	43.801	1.4	0.273	1.34	70′	EL	34.5	0.507	1.85	70′	EL	6.9	0.80	0.273	1.04	70′	EL	34.5	
	TTST	TNAGRIT3	33.000	--	1.336	44.087	1.4	0.273	1.72	70′	EL	34.5	0.507	2.23	70′	EL	6.9	0.80	0.273	1.34	70′	EL	34.5	
		TNT4A	33.075	--	1.342	44.401	1.4	0.273	1.72	70′	EL	34.5	0.507	2.17	70′	EL	6.9	0.80	0.273	1.34	70′	EL	34.5	
		TNT6A	41.600	--	1.1	45.746	1.4	0.273	1.41	70′	EL	34.5	0.507	1.98	70′	EL	6.9	0.80	0.273	1.10	70′	EL	34.5	
		TNT7A	42.000	--	1.106	46.462	1.4	0.273	1.42	70′	EL	34.5	0.507	1.94	70′	EL	6.9	0.80	0.273	1.11	70′	EL	34.5	
		TNT7B	42.000	--	1.147	48.18	1.4	0.273	1.47	70′	EL	34.5	0.507	1.8	70′	EL	6.9	0.80	0.273	1.15	70′	EL	34.5	
		TNAGRIT4	43.000	--	1.089	46.838	1.4	0.273	1.4	70′	EL	34.5	0.507	1.74	70′	EL	6.9	0.80	0.273	1.09	70′	EL	34.5	
		TNAGT5A	45.000	--	1.026	46.175	1.4	0.273	1.32	70′	EL	34.5	0.507	1.74	70′	EL	6.9	0.80	0.273	1.03	70′	EL	34.5	
		TNAGT5B	45.000	**3**	1.013	45.579	1.4	0.273	1.3	70′	EL	34.5	0.507	1.66	70′	EL	6.9	0.80	0.273	**1.01**	70′	EL	**34.5**	

LOAD FACTORS:

DESIGN LOAD RATING FACTORS	LIMIT STATE	γ_{DC}	γ_{DW}
	STRENGTH I	1.25	1.50
	SERVICE III	1.00	1.00

NOTES:

MINIMUM RATING FACTORS ARE BASED ON THE STRENGTH I AND SERVICE III LIMIT STATES.

ALLOWABLE STRESSES FOR SERVICE III LIMIT STATE ARE AS REQUIRED FOR DESIGN.

COMMENTS:

1.

2.

3.

4.

(#) CONTROLLING LOAD RATING

(1) DESIGN LOAD RATING (HL-93)

(2) DESIGN LOAD RATING (HS-20)

(3) LEGAL LOAD RATING **

** SEE CHART FOR VEHICLE TYPE

GIRDER LOCATION

I - INTERIOR GIRDER
EL - EXTERIOR LEFT GIRDER
ER - EXTERIOR RIGHT GIRDER

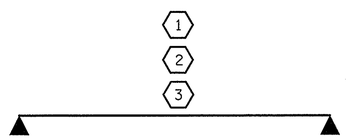

LRFR SUMMARY

FOR SPAN A

PROJECT NO. 17BP.8.R.41

LEE COUNTY

STATION: 15+44.00 -L-

STATE OF NORTH CAROLINA
DEPARTMENT OF TRANSPORTATION
RALEIGH

LRFR SUMMARY FOR
70′ CORED SLAB UNIT
90° SKEW
(NON-INTERSTATE TRAFFIC)

REVISIONS						SHEET NO.
NO.	BY:	DATE:	NO.	BY:	DATE:	S-3
1			3			TOTAL SHEETS
2			4			16

PLANS PREPARED BY:
SIMPSON ENGINEERS & ASSOCIATES
5640 Dillard Drive
Suite 200
Cary, NC 27518
(919) 852-0468
(919) 852-0598 (Fax)
www.simpsonengr.com
LICENSURE NO. C-2521

NORTH CAROLINA PROFESSIONAL SEAL 11268 ENGINEER BETSY S. COX — 8/14/13

DRAWN BY : T. BANKOVICH DATE : 8-13
CHECKED BY : B.S. COX DATE : 8-13

8/14/2013 10:48:57 AM G:\Projects\2012\17BP.8.R.41 (Lee 50)\Structures\Drawings\FinalNee50_sd_lrfr.dgn

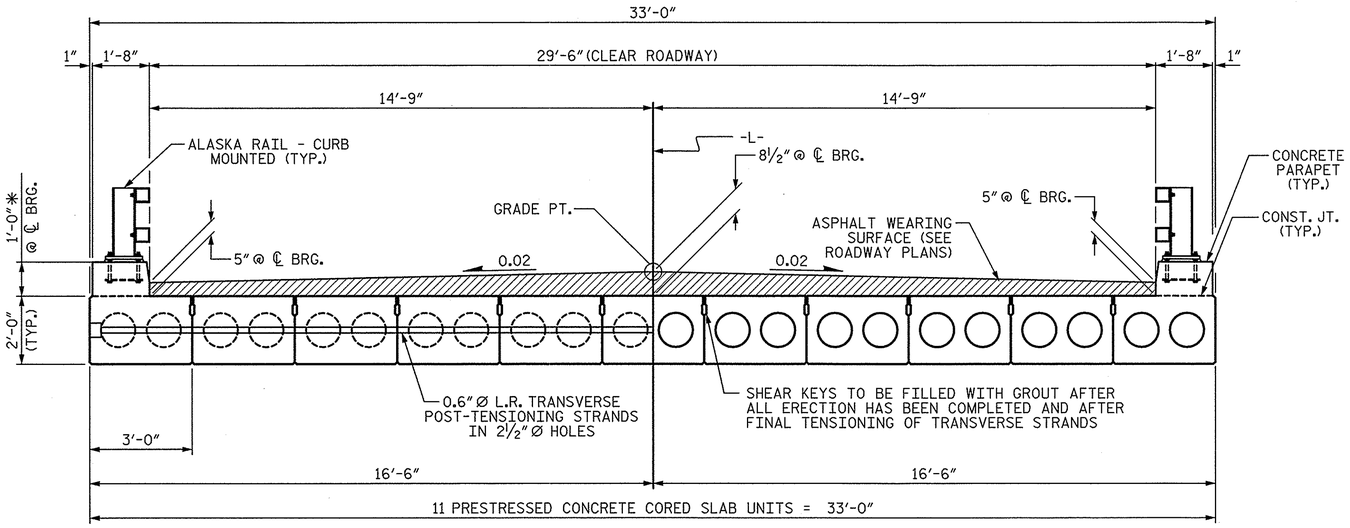

HALF SECTION
AT INTERMEDIATE DIAPHRAGMS

HALF SECTION
THROUGH VOIDS

TYPICAL SECTION

*- THE MAXIMUM CONCRETE PARAPET HEIGHT AND ASPHALT THICKNESS IS SHOWN. THE HEIGHT OF THE CONCRETE PARAPET AND ASPHALT THICKNESS VARIES WHILE THE TOP OF THE CONCRETE PARAPET FOLLOWS THE PROFILE OF THE GUTTERLINE. FOR PARAPET HEIGHT DETAILS AND ASPHALT THICKNESS, SEE THE "CONCRETE PARAPET AND RAIL POST SPACING" SHEET.

FIXED END

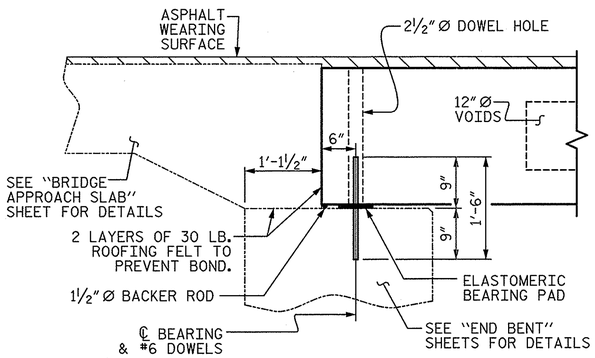

SECTION @ END BENT

GROUT RECESS @ END OF POST-TENSIONED STRAND-CORED SLAB

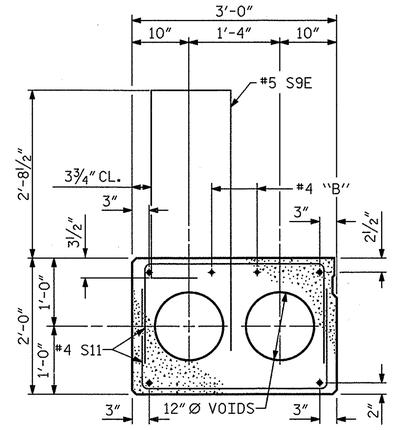

EXTERIOR SLAB SECTION @ END POST

(FOR PRESTRESSED STRAND LAYOUT, SEE INTERIOR SLAB SECTION.)

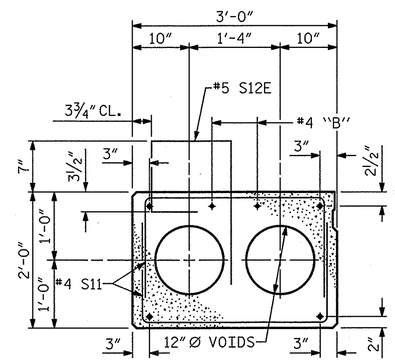

EXTERIOR SLAB SECTION @ PARAPET

(FOR PRESTRESSED STRAND LAYOUT, SEE INTERIOR SLAB SECTION.)

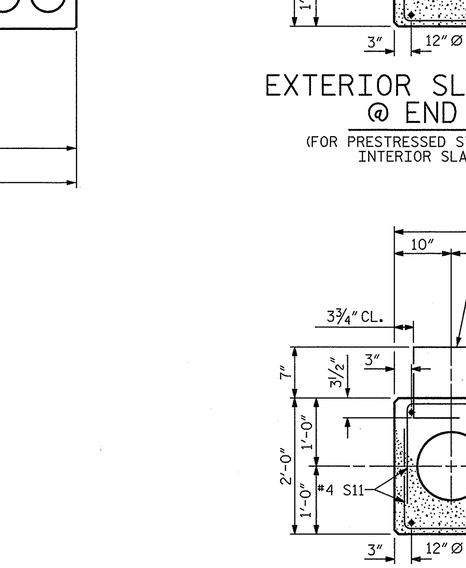

END ELEVATION

SHOWING PLACEMENT OF DOUBLE STIRRUPS AND LOCATION OF DOWEL HOLES. (STRAND LAYOUT NOT SHOWN.) INTERIOR SLAB UNIT SHOWN-EXTERIOR SLAB UNIT SIMILAR EXCEPT SHEAR KEY LOCATION.

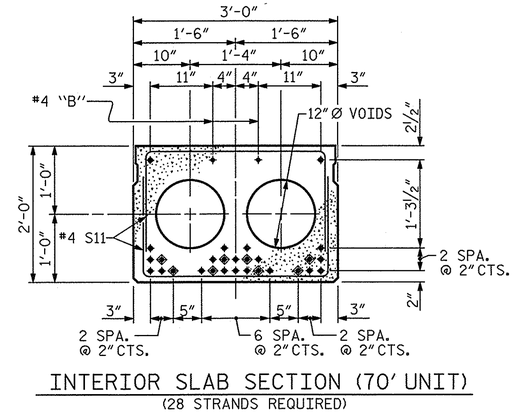

INTERIOR SLAB SECTION (70′ UNIT)

(28 STRANDS REQUIRED)

0.6″Ø LOW RELAXATION STRAND LAYOUT

◈ BOND SHALL BE BROKEN ON THESE STRANDS FOR A DISTANCE OF 12′-0″ FROM END OF CORED SLAB UNIT. SEE STANDARD SPECIFICATIONS, ARTICLE 1078-7.

DEBONDING LEGEND

SHEAR KEY DETAIL

NOTE: OMIT SHEAR KEY ON OUTSIDE FACE OF EXTERIOR CORED SLABS.

PROJECT NO. 17BP.8.R.41
LEE COUNTY
STATION: 15+44.00 -L-

SHEET 1 OF 4

STATE OF NORTH CAROLINA
DEPARTMENT OF TRANSPORTATION
RALEIGH

3′-0″ X 2′-0″ PRESTRESSED CONCRETE CORED SLAB UNIT

REVISIONS						SHEET NO.
NO.	BY:	DATE:	NO.	BY:	DATE:	S-4
1			3			TOTAL SHEETS
2			4			16

PLANS PREPARED BY:
SIMPSON ENGINEERS & ASSOCIATES
5640 Dillard Drive
Suite 200
Cary, NC 27518
(919) 852-0468
(919) 852-0598 (Fax)
www.simpsonengr.com
LICENSURE NO. C-2521

NORTH CAROLINA PROFESSIONAL SEAL L2521 ENGINEER BETSY S. COX
8-14-13

DRAWN BY : T. BANKOVICH DATE : 8-13
CHECKED BY : B.S. COX DATE : 8-13

8/14/2013 10:48:57 AM G:\Projects\2012\17BP.8.R.41 (Lee 50)\Structures\Drawings\Final\lee50_sd_NEW_super_8-5-2013.dgn

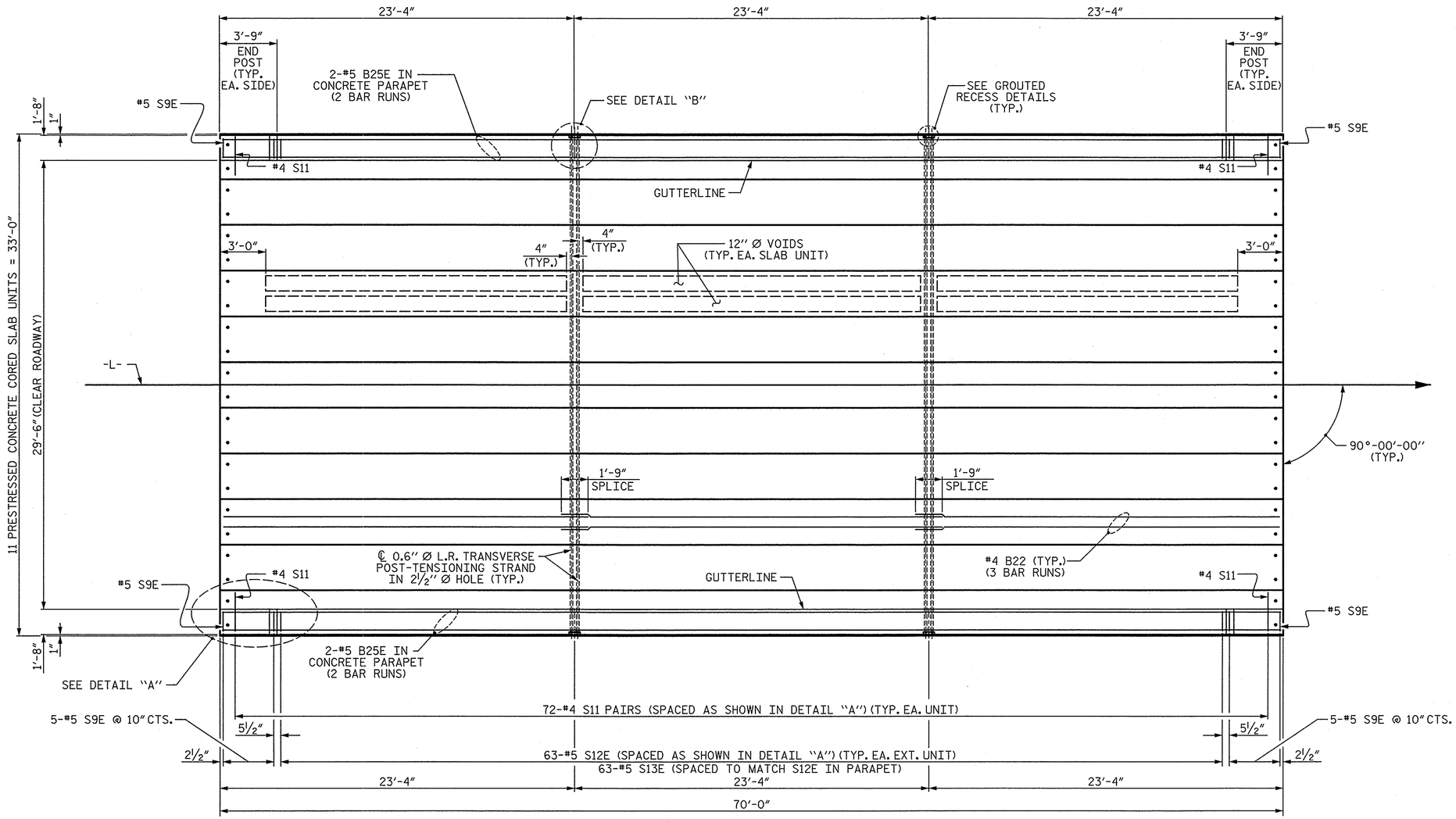

PLAN OF UNIT

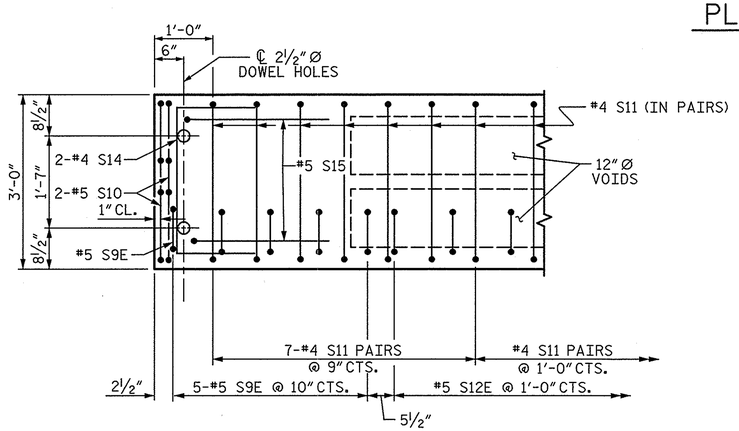

DETAIL "A"

NOTE: EXTERIOR UNIT SHOWN - INTERIOR UNIT SIMILAR EXCEPT OMIT #5 S9E AND #5 S12E BARS.

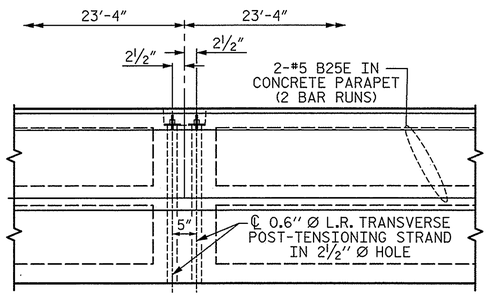

DETAIL "B"

#4 S11 BARS MAY BE SHIFTED AS NECESSARY TO MAINTAIN 1" CLEAR TO GROUTED RECESS AND 2½" Ø TRANSVERSE POST-TENSIONING STRAND HOLES

DRAWN BY : T. BANKOVICH DATE : 8-13
CHECKED BY : B.S. COX DATE : 8-13

PLANS PREPARED BY:
SIMPSON ENGINEERS & ASSOCIATES
5640 Dillard Drive
Suite 200
Cary, NC 27518
(919) 852-0468
(919) 852-0598 (Fax)
www.simpsonengr.com
LICENSURE NO. C-2521

NORTH CAROLINA PROFESSIONAL SEAL L1268 ENGINEER BETSY S. COX

PROJECT NO. 17BP.8.R.41
LEE COUNTY
STATION: 15+44.00 -L-

SHEET 2 OF 4

STATE OF NORTH CAROLINA
DEPARTMENT OF TRANSPORTATION
RALEIGH

PLAN OF 70' UNIT 29'-6" CLEAR ROADWAY 90° SKEW

REVISIONS						SHEET NO.
NO.	BY:	DATE:	NO.	BY:	DATE:	S-5
1			3			TOTAL SHEETS
2			4			16

8/14/2013 10:48:57 AM G:\Projects\2012\17BP.8.R.41 (Lee 50)\Structures\Drawings\FinalLee50\Lee50_sd_NEW_super_8-5-2013.dgn

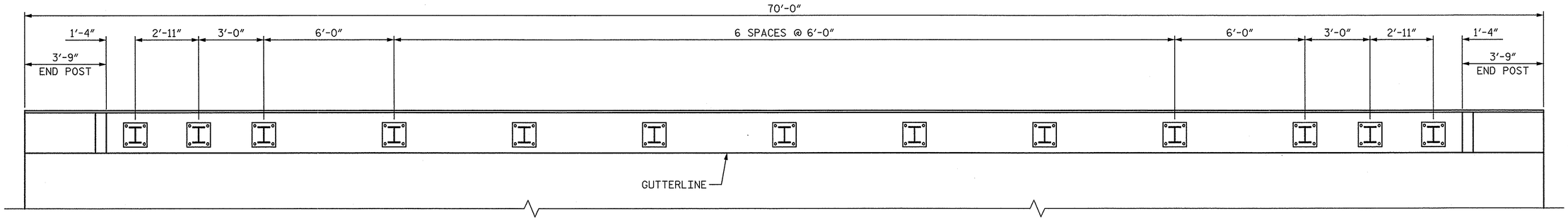

PLAN OF RAIL POST SPACING

(LEFT SIDE SHOWN, RIGHT SIDE SIMILAR)

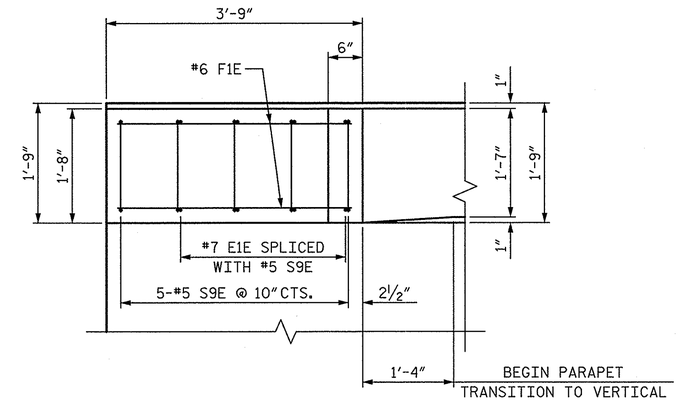

PLAN OF END POST

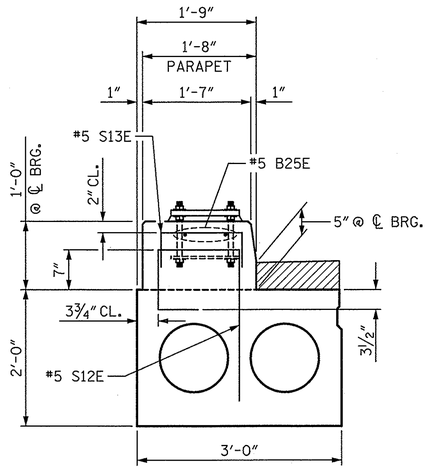

PARAPET DETAILS

#5 B25E BARS MAY BE SHIFTED AS NECESSARY TO CLEAR ANCHOR ASSEMBLY

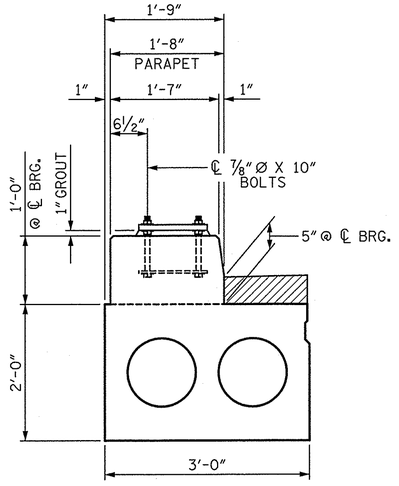

ANCHOR DETAILS

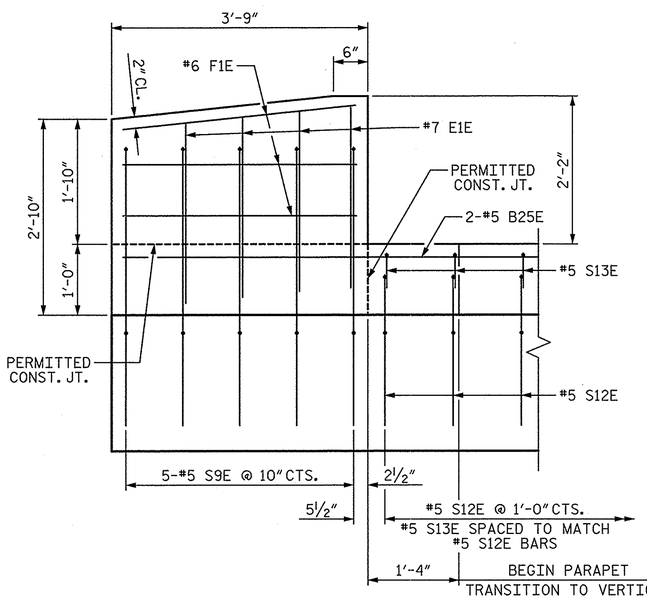

ELEVATION

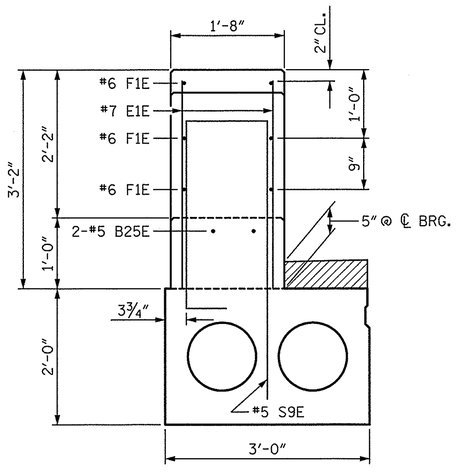

END VIEW

PARAPET AND END POST DETAILS

NOTE: THE MAXIMUM HEIGHT OF THE PARAPETS AND ASPHALT THICKNESS ARE SHOWN. THE HEIGHT OF THE PARAPET AND ASPHALT THICKNESS VARIES WHILE THE TOP OF THE PARAPET FOLLOWS THE PROFILE OF THE GUTTERLINE.

GUTTERLINE ASPHALT THICKNESS AND PARAPET HEIGHT

	@ ℄ BEARING	@ MIDSPAN
ASPHALT OVERLAY THICKNESS	5"	1½"
PARAPET HEIGHT	1'-0"	9"

PROJECT NO. 17BP.8.R.41

LEE COUNTY

STATION: 15+44.00 -L-

SHEET 3 OF 4

STATE OF NORTH CAROLINA
DEPARTMENT OF TRANSPORTATION
RALEIGH

CONCRETE PARAPET AND RAIL POST SPACING

REVISIONS						SHEET NO.
NO.	BY:	DATE:	NO.	BY:	DATE:	S-6
1			3			TOTAL SHEETS
2			4			16

PLANS PREPARED BY:
SIMPSON ENGINEERS & ASSOCIATES
5640 Dillard Drive
Suite 200
Cary, NC 27518
(919) 852-0468
(919) 852-0598 (Fax)
www.simpsonengr.com
LICENSURE NO. C-2521

NORTH CAROLINA PROFESSIONAL SEAL 11268 ENGINEER BETSY S. COX — 8-14-13

DRAWN BY : T. BANKOVICH DATE : 8-13
CHECKED BY : B.S. COX DATE : 8-13

8/14/2013 10:48:57 AM G:\Projects\2012\17BP.8.R.41 (Lee 50)\Structures\Drawings\Final\lee50_sd_NEW_super_8-5-2013.dgn

GRADE 270 STRANDS	
	0.6″ Ø L.R.
AREA (SQUARE INCHES)	0.217
ULTIMATE STRENGTH (LBS. PER STRAND)	58,600
APPLIED PRESTRESS (LBS. PER STRAND)	43,950

CORED SLABS REQUIRED			
	NUMBER	LENGTH	TOTAL LENGTH
70′ UNIT			
EXTERIOR C.S.	2	70′-0″	140′-0″
INTERIOR C.S.	9	70′-0″	630′-0″
TOTAL	11		770′-0″

DEAD LOAD DEFLECTION AND CAMBER	
	3′-0″ x 2′-0″
70′ CORED SLAB UNIT	0.6″ Ø L.R. STRAND
CAMBER (SLAB ALONE IN PLACE)	4 5/16″ ↑
DEFLECTION DUE TO SUPERIMPOSED DEAD LOAD**	13/16″ ↓
FINAL CAMBER	3 1/2″ ↑

** INCLUDES FUTURE WEARING SURFACE

BAR TYPES

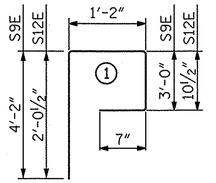

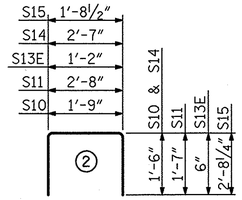

ALL BAR DIMENSIONS ARE OUT TO OUT

NOTES:

ALL PRESTRESSING STRANDS SHALL BE 7-WIRE LOW RELAXATION GRADE 270 STRANDS AND SHALL CONFORM TO AASHTO M203 EXCEPT FOR SAMPLING REQUIREMENTS WHICH SHALL BE IN ACCORDANCE WITH THE STANDARD SPECIFICATIONS.

ALL REINFORCING STEEL CAST WITH THE CORED SLAB SECTIONS SHALL BE GRADE 60 AND SHALL BE INCLUDED IN THE UNIT PRICE BID FOR PRESTRESSED CONCRETE CORED SLABS.

RECESSES FOR TRANSVERSE STRANDS SHALL BE GROUTED AFTER THE TENSIONING OF THE STRANDS.

THE 2 1/2″ Ø DOWEL HOLES AT FIXED ENDS OF SLAB SECTIONS SHALL BE FILLED WITH NON-SHRINK GROUT.

THE BACKER RODS SHALL CONFORM TO THE REQUIREMENTS OF TYPE M BOND BREAKER. SEE SECTION 1028 OF THE STANDARD SPECIFICATIONS.

WHEN CORED SLABS ARE CAST, AN INTERNAL HOLD-DOWN SYSTEM SHALL BE EMPLOYED TO PREVENT VOIDS FROM RISING OR MOVING SIDEWAYS. AT LEAST SIX WEEKS PRIOR TO CASTING CORED SLABS, THE CONTRACTOR SHALL SUBMIT TO THE ENGINEER FOR REVIEW AND COMMENT, DETAILED DRAWINGS OF THE PROPOSED HOLD-DOWN SYSTEM. IN ADDITION TO STRUCTURAL DETAILS, LOCATION AND SPACING OF THE HOLD-DOWNS SHALL BE INDICATED.

THE TRANSFER OF LOAD FROM THE ANCHORAGES TO THE CORED SLAB UNIT SHALL BE DONE WHEN THE CONCRETE HAS REACHED A COMPRESSIVE STRENGTH OF NOT LESS THAN THE REQUIRED STRENGTH SHOWN IN THE "CONCRETE RELEASE STRENGTH" TABLE.

ALL REINFORCING STEEL IN CONCRETE PARAPET SHALL BE EPOXY COATED.

PRESTRESSING STRANDS SHALL BE CUT FLUSH WITH THE CORED SLAB UNIT ENDS.

APPLY EPOXY PROTECTIVE COATING TO CORED SLAB UNIT ENDS.

TRANSVERSE POST TENSIONING OF THE CORED SLAB UNITS SHALL BE DONE IN ACCORDANCE WITH THE STANDARD SPECIFICATIONS.

MAINTAIN A SYMMETRIC TENSION FORCE BETWEEN EACH PAIR OF TRANSVERSE POST TENSIONING STRANDS IN THE DIAPHRAGM.

THE #4 S11 STIRRUPS MAY BE SHIFTED AS NECESSARY TO MAINTAIN 1″ CLEAR TO THE GROUTED RECESS.

FOR GROUT FOR STRUCTURES, SEE SPECIAL PROVISIONS.

BILL OF MATERIAL FOR 2 CONCRETE PARAPETS AND 4 END POSTS

BAR	NO.	SIZE	TYPE	LENGTH	WEIGHT
B25E	8	#5	STR	36′-7″	305
E1E	32	#7	STR	2′-8″	174
F1E	24	#6	STR	3′-5″	123
S13E	126	#5	2	2′-2″	285
"E" EPOXY COATED REINFORCING STEEL			LBS.		887
CLASS AA CONCRETE			CU.YDS.		9.5
TOTAL 1′-8″X 1′-0″CONCRETE PARAPET			LN. FT.		140.00

CONCRETE RELEASE STRENGTH	
UNIT	PSI
70′ UNITS	5500

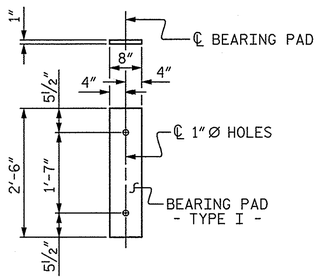

FIXED END
(TYPE I - 22 REQ'D)

ELASTOMERIC BEARING DETAILS

ELASTOMER IN ALL BEARINGS SHALL BE 60 DUROMETER HARDNESS.

BILL OF MATERIAL FOR ONE 70′ CORED SLAB UNIT

				EXTERIOR UNIT		INTERIOR UNIT	
BAR	NUMBER	SIZE	TYPE	LENGTH	WEIGHT	LENGTH	WEIGHT
B22	6	#4	STR	24′-6″	98	24′-6″	98
S9E	10	#5	1	8′-11″	93		
S10	8	#5	2	4′-9″	40	4′-9″	40
S11	144	#4	2	5′-10″	561	5′-10″	561
S12E	63	#5	1	4′-8″	307		
S14	4	#4	2	5′-7″	15	5′-7″	15
S15	4	#5	2	7′-1″	30	7′-1″	30
REINFORCING STEEL			LBS.		744		744
"E" EPOXY COATED REINFORCING STEEL			LBS.		400		
7000 P.S.I. CONCRETE			CU. YDS.		11.8		11.8
0.6″ Ø L.R. STRANDS			No.		28		28

PLANS PREPARED BY:

SIMPSON ENGINEERS & ASSOCIATES
5640 Dillard Drive
Suite 200
Cary, NC 27518
(919) 852-0468
(919) 852-0598 (Fax)
www.simpsonengr.com
LICENSURE NO. C-2521

NORTH CAROLINA PROFESSIONAL SEAL 032868 ENGINEER BETSY S. COX
8-14-13

PROJECT NO. 17BP.8.R.41
LEE COUNTY
STATION: 15+44.00 -L-

SHEET 4 OF 4

STATE OF NORTH CAROLINA
DEPARTMENT OF TRANSPORTATION
RALEIGH

3′-0″X 2′-0″ PRESTRESSED CONCRETE CORED SLAB UNIT

REVISIONS						SHEET NO.
NO.	BY:	DATE:	NO.	BY:	DATE:	S-7
1			3			TOTAL SHEETS
2			4			16

DRAWN BY : T. BANKOVICH DATE : 8-13
CHECKED BY : B.S. COX DATE : 8-13

8/14/2013 10:48:57 AM G:\Projects\2012\17BP.8.R.41 (Lee 50)\Structures\Drawings\Final\lee50_sd_NEW_super_8-5-2013.dgn

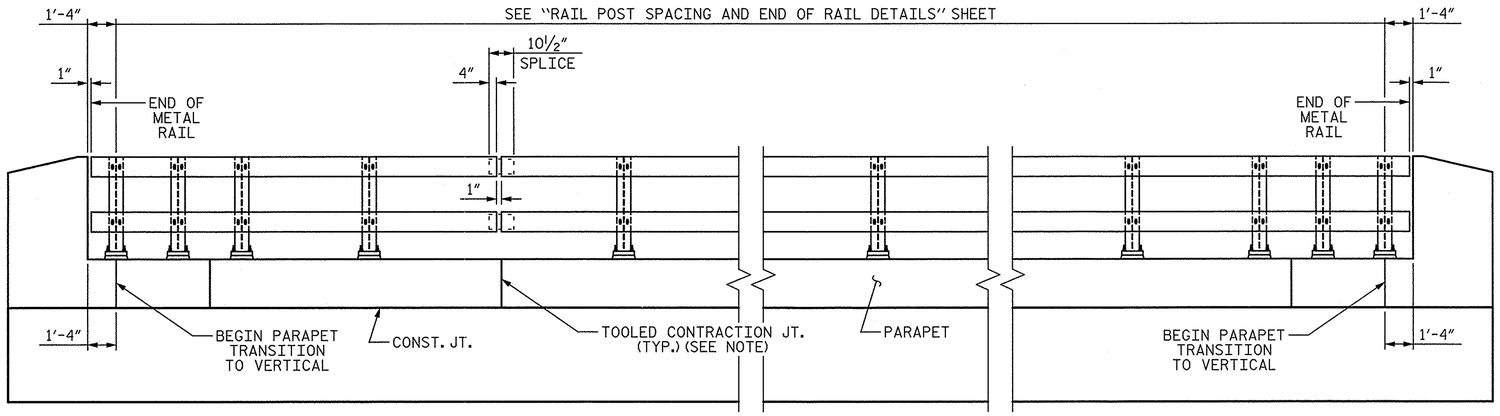

ELEVATION

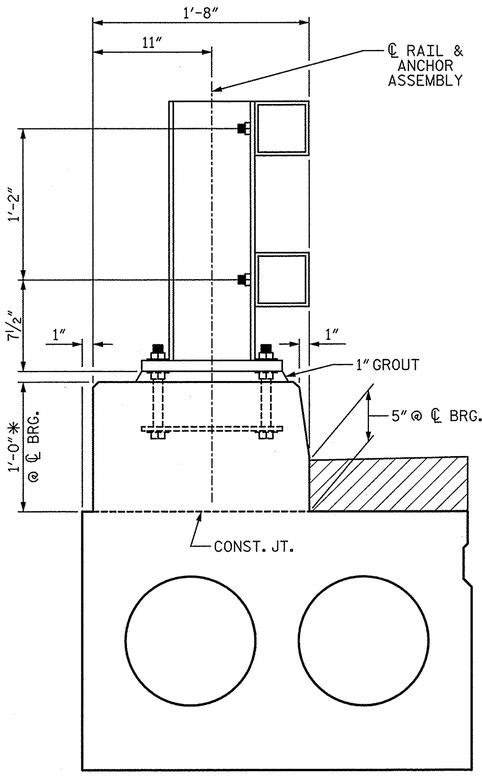

SECTION THRU RAIL

* THE MAXIMUM CONCRETE PARAPET HEIGHT AND ASPHALT THICKNESS IS SHOWN. THE HEIGHT OF THE CONCRETE PARAPET AND ASPHALT THICKNESS VARIES WHILE THE TOP OF THE CONCRETE PARAPET FOLLOWS THE PROFILE OF THE GUTTERLINE. FOR PARAPET HEIGHT DETAILS AND ASPHALT THICKNESS, SEE THE "CONCRETE PARAPET AND RAIL POST SPACING" SHEET.

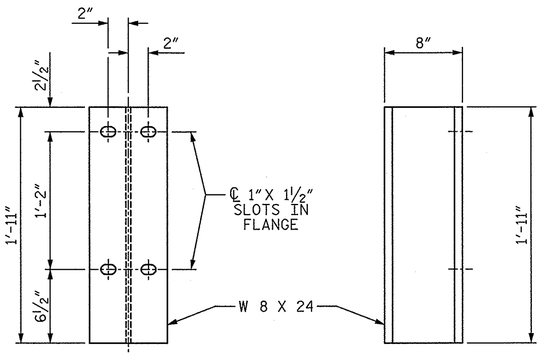

FRONT ELEVATION SIDE VIEW

DETAILS OF POST

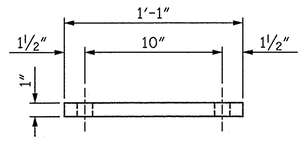

FRONT ELEVATION

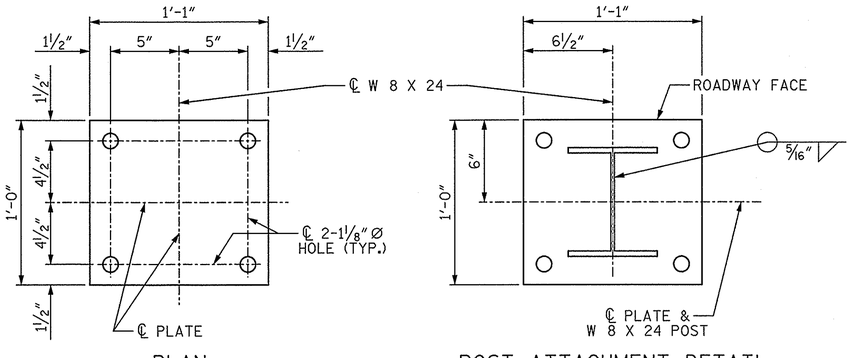

PLAN POST ATTACHMENT DETAIL

POST BASE DETAILS

NOTES:

METAL RAIL SHALL BE GALVANIZED STEEL IN ACCORDANCE WITH THE REQUIREMENTS OF THE GENERAL NOTES AND THE FOLLOWING SPECIFICATIONS.

GALVANIZED STEEL RAILS:

MATERIAL AND GALVANIZING ARE TO CONFORM TO THE FOLLOWING SPECIFICATIONS:

ANCHOR PLATE: AASHTO M270 GRADE 36 STRUCTURAL STEEL.

POST, POST BASES, AND RAIL SPLICE BARS: AASHTO M270 GRADE 36 STRUCTURAL STEEL - GALVANIZED IN ACCORDANCE WITH AASHTO M111.

SHIMS: SHIMS SHALL MEET THE REQUIREMENTS OF ASTM A570 FOR GRADE 33 OR A611 FOR GRADE C AND SHALL BE GALVANIZED IN ACCORDANCE WITH AASHTO M111.

RAIL CAPS: RAIL CAPS SHALL MEET THE REQUIREMENTS OF ASTM A570 FOR GRADE 33 OR A611 FOR GRADE C AND SHALL BE GALVANIZED IN ACCORDANCE WITH AASHTO M111.

RAILS: ASTM A500, A501 OR A618 - GALVANIZED IN ACCORDANCE WITH AASHTO M111. ALUMINUM WILL NOT BE ALLOWED.

THE REDUCED BASE WELDED STUDS AND THE CUT ENDS OF THE GALVANIZED RAILING (AFTER GRINDING SMOOTH) SHALL BE GIVEN TWO COATS OF ZINC RICH PAINT MEETING THE REQUIREMENTS OF FEDERAL SPECIFICATION MIL-P-26915 USAF TYPE 1, OR OF FEDERAL SPECIFICATIONS TT-P-641.

STUDS, NUTS, AND WASHERS: REDUCED BASE WELDED STUDS SHALL MEET THE REQUIREMENTS OF ASTM A108. NUTS SHALL CONFORM TO ASTM A563 DH AND WASHERS TO A436. NUTS AND WASHERS SHALL BE GALVANIZED.

ANCHOR BOLTS SHALL BE ASTM A325 AND SHALL BE GALVANIZED.

GENERAL NOTES:

RAILING SHALL BE CONTINUOUS FROM END POST TO END POST OF BRIDGE. EACH JOINT IN RAIL LENGTH SHALL BE SPLICED AS DETAILED. PANEL LENGTHS OF RAIL SHALL BE ATTACHED TO A MINIMUM OF THREE POSTS.

FOR END OF RAIL TO CLEAR FACE OF CONCRETE END POST DIMENSION, SEE ELEVATION.

CERTIFIED MILL REPORTS ARE REQUIRED FOR RAILS AND POSTS. SHOP INSPECTION IS NOT REQUIRED.

METAL RAIL POSTS SHALL BE SET NORMAL TO CURB GRADE.

METHOD OF MEASUREMENT FOR METAL RAILS: FOR LENGTH OF METAL RAILS TO BE PAID FOR, SEE THE STANDARD SPECIFICATIONS AND SPECIAL PROVISION FOR ALASKA RAIL-CURB MOUNTED.

CURVED RAIL USAGE: WHERE RAILS ARE LOCATED IN AREA OF VERTICAL CURVATURE THE CONTRACTOR MAY, AT HIS OPTION, HAVE THE REQUIRED CURVATURE IN THE RAIL FORMED IN THE SHOP OR IN THE FIELD. IN EITHER EVENT, THE RAIL SHALL CONFORM WITHOUT BUCKLING OR KINKING TO THE REQUIRED CURVATURE IN A UNIFORM MANNER ACCEPTABLE TO THE ENGINEER.

TO INSURE FUTURE IDENTIFICATION OF THE FABRICATOR, A PERMANENT IDENTIFYING MARK SHALL BE PLACED ON EACH POST. THE METHOD OF MARKING AND LOCATION SHALL BE SUCH THAT IT DOES NOT DETRACT FROM THE APPEARANCE OF THE POST, BUT REMAINS VISIBLE AFTER RAIL PLACEMENT.

MINOR VARIATIONS IN DETAILS OF METAL RAIL WILL BE CONSIDERED. DETAILS OF SUCH VARIATIONS, IF DESIRED, SHALL BE SUBMITTED FOR APPROVAL.

GROOVED CONTRACTION JOINTS, ½" IN DEPTH, SHALL BE TOOLED IN ALL EXPOSED FACES OF THE PARAPET AND IN ACCORDANCE WITH ARTICLE 825-10(B) OF THE STANDARD SPECIFICATIONS. THE CONTRACTION JOINT SHALL BE LOCATED AT AT A SPACING OF 8 FT. TO 10 FT BETWEEN EXPANSION JOINTS. NO CONTRACTION JOINTS WILL BE REQUIRED FOR SEGMENTS LESS THAN 10 FT. IN LENGTH.

THE GROUT BED SHALL BE PLACED PRIOR TO INSTALLING THE END POSTS. GROUT SHALL BE NON-SHRINK, NON-METALLIC GROUT, SEE SPECIAL PROVISIONS.

TORQUE NUTS ON REDUCED BASE WELDED STUDS TO 100 FT. LBS.

PAY LENGTH = 125.00 LF

PROJECT NO. 17BP.8.R.41

LEE COUNTY

STATION: 15+44.00 -L-

SHEET 1 OF 2

STATE OF NORTH CAROLINA
DEPARTMENT OF TRANSPORTATION
RALEIGH

ALASKA RAIL-CURB MOUNTED

PLANS PREPARED BY:
SIMPSON ENGINEERS & ASSOCIATES
5640 Dillard Drive
Suite 200
Cary, NC 27518
(919) 852-0468
(919) 852-0598 (Fax)
www.simpsonengr.com
LICENSURE NO. C-2521

NORTH CAROLINA PROFESSIONAL SEAL L1268 ENGINEER BETSY S. COX
8-14-13

REVISIONS						SHEET NO.
NO.	BY:	DATE:	NO.	BY:	DATE:	S-8
1			3			TOTAL SHEETS
2			4			16

DRAWN BY : T. BANKOVICH DATE : 8-13
CHECKED BY : B.S. COX DATE : 8-13

8/14/2013 10:48:58 AM G:\Projects\2012\17BP.8.R.41 (Lee 50)\Structures\Drawings\Final\lee50_sd_NEW_super_8-5-2013.dgn

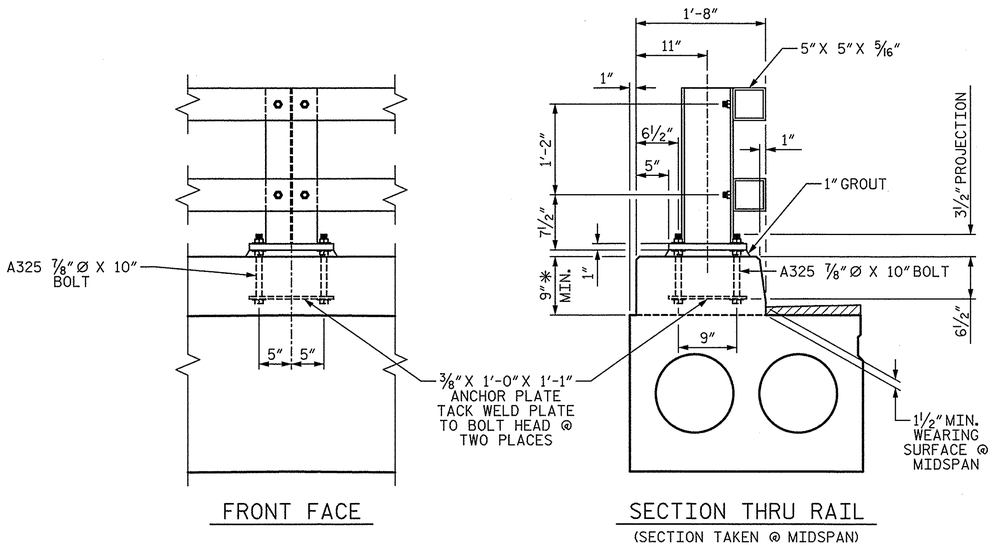

RAIL POST ATTACHMENT DETAILS

(26 ATTACHMENT ASSEMBLIES REQUIRED)

* THE MINIMUM HEIGHT OF THE CONCRETE PARAPET IS SHOWN, THE HEIGHT OF THE CONCRETE PARAPET VARIES WHILE THE TOP OF THE PARAPET FOLLOWS THE PROFILE OF THE GUTTERLINE.

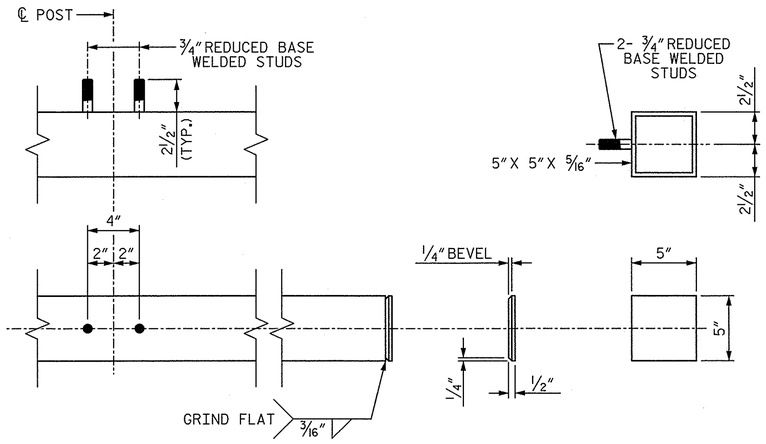

RAIL CAP AND ATTACHMENT STUD DETAILS

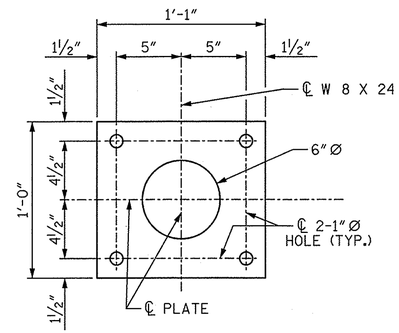

ANCHOR PLATE DETAILS

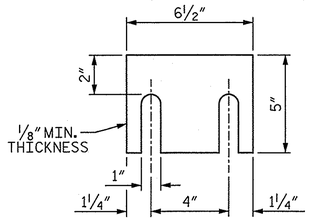

RAILING SHIM DETAIL

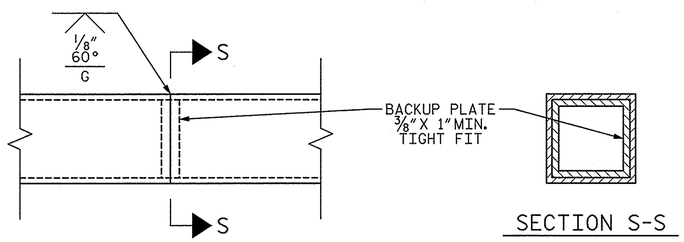

RAIL WELDED SPLICE DETAILS

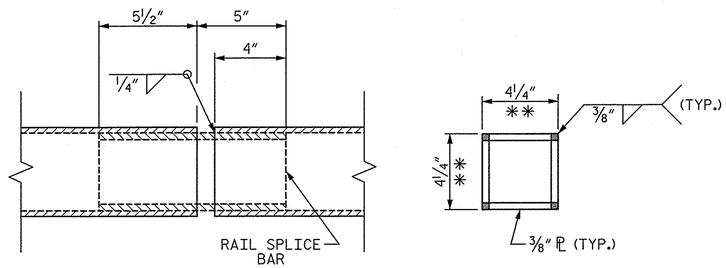

RAIL SPLICE DETAILS

** - DIMENSION AFTER GRINDING RADIUS ON CORNERS TO MATCH INSIDE OF METAL RAIL

PROJECT NO. 17BP.8.R.41

LEE COUNTY

STATION: 15+44.00 -L-

SHEET 2 OF 2

STATE OF NORTH CAROLINA
DEPARTMENT OF TRANSPORTATION
RALEIGH

ALASKA RAIL-
CURB MOUNTED

REVISIONS						SHEET NO.
NO.	BY:	DATE:	NO.	BY:	DATE:	S-9
1			3			TOTAL SHEETS
2			4			16

PLANS PREPARED BY:

SIMPSON ENGINEERS & ASSOCIATES
5640 Dillard Drive
Suite 200
Cary, NC 27518
(919) 852-0468
(919) 852-0598 (Fax)
www.simpsonengr.com
LICENSURE NO. C-2521

NORTH CAROLINA PROFESSIONAL SEAL 11268 ENGINEER BETSY S. COX
Betsy S. Cox 8-14-13

DRAWN BY : T. BANKOVICH DATE : 8-13
CHECKED BY : B.S. COX DATE : 8-13

8/14/2013 10:48:58 AM G:\Projects\2012\17BP.8.R.41 (Lee 50)\Structures\Drawings\Final\lee50_sd_NEW_super_8-5-2013.dgn

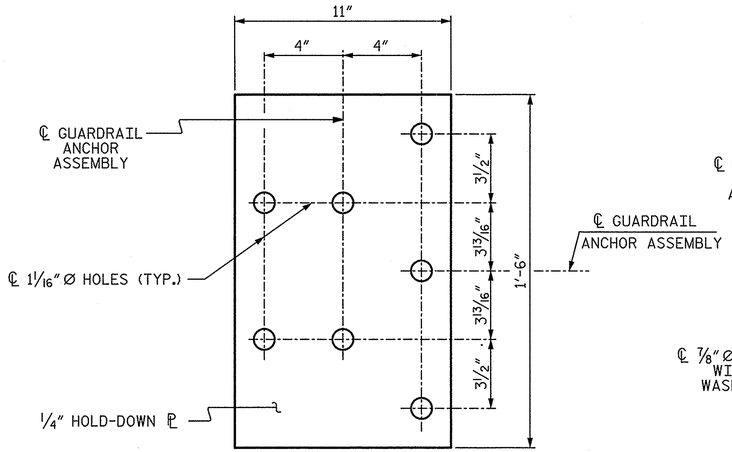

PLAN

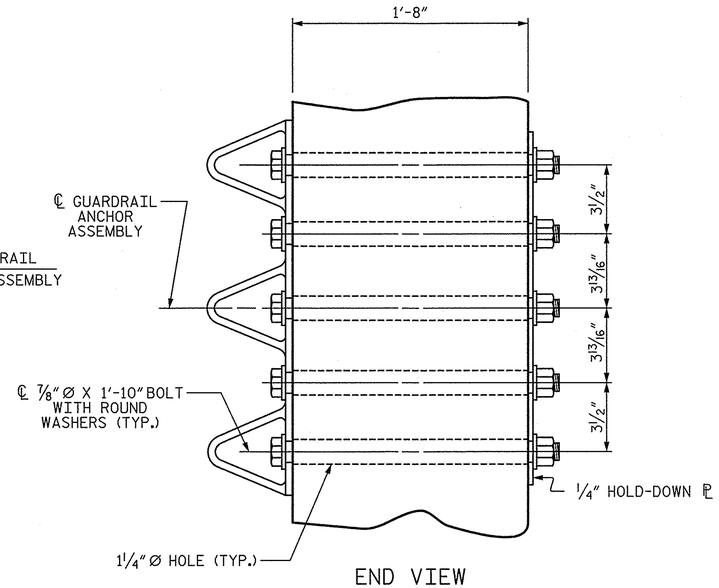

END VIEW

NOTES:

THE GUARDRAIL ANCHOR ASSEMBLY SHALL CONSIST OF A 1/4″ HOLD DOWN PLATE AND 7 - 7/8″ Ø BOLTS WITH NUTS AND WASHERS.

THE HOLD-DOWN PLATE SHALL CONFORM TO AASHTO M270 GRADE 36. AFTER FABRICATION, THE HOLD-DOWN PLATE SHALL BE HOT-DIP GALVANIZED IN ACCORDANCE WITH AASHTO M111.

BOLTS SHALL CONFORM TO THE REQUIREMENTS OF ASTM A307 AND NUTS SHALL CONFORM TO THE REQUIREMENTS OF AASHTO M291. BOLTS, NUTS AND WASHERS SHALL BE GALVANIZED. AT THE CONTRACTOR'S OPTION, STAINLESS STEEL BOLTS, NUTS AND WASHERS MAY BE USED AS AN ALTERNATE FOR THE 7/8″ Ø GALVANIZED BOLTS, NUTS AND WASHERS. THEY SHALL CONFORM TO OR EXCEED THE MECHANICAL REQUIREMENTS OF ASTM A307. THE USE OF THIS ALTERNATE SHALL BE APPROVED BY THE ENGINEER.

THE GUARDRAIL ANCHOR ASSEMBLY IS REQUIRED AT ALL POINTS WHERE APPROACH GUARDRAIL IS TO BE ATTACHED TO THE END OF THE PARAPET. FOR POINTS OF ATTACHMENT, SEE SKETCH.

AFTER INSTALLATION, THE EXPOSED THREAD OF THE BOLT SHALL BE BURRED WITH A SHARP POINTED TOOL.

THE COST OF THE GUARDRAIL ANCHOR ASSEMBLIES WITH BOLTS, NUTS AND WASHERS COMPLETE IN PLACE, SHALL BE INCLUDED IN THE VARIOUS PAY ITEMS.

THE VERTICAL REINFORCING BARS MAY BE SHIFTED SLIGHTLY IN THE END POST TO CLEAR ASSEMBLY BOLTS.

THE 1 1/4″ Ø HOLES SHALL BE FORMED OR DRILLED WITH A CORE BIT. IMPACT TOOLS WILL NOT BE PERMITTED. ANY CONCRETE DAMAGED BY THIS WORK SHALL BE REPAIRED TO THE SATISFACTION OF THE ENGINEER.

GUARDRAIL ANCHOR ASSEMBLY DETAILS

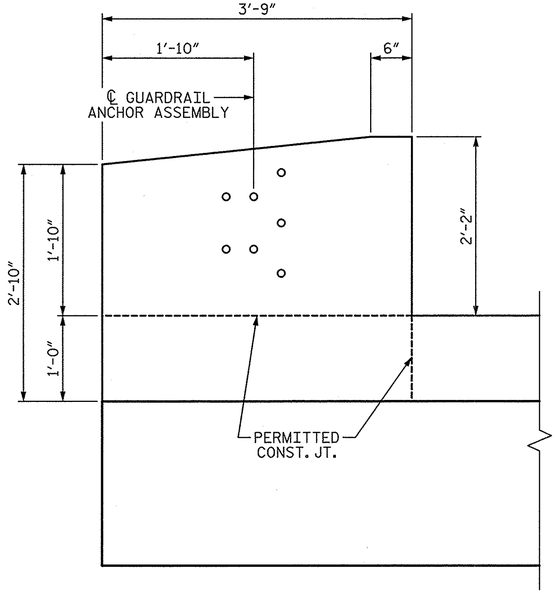

ELEVATION

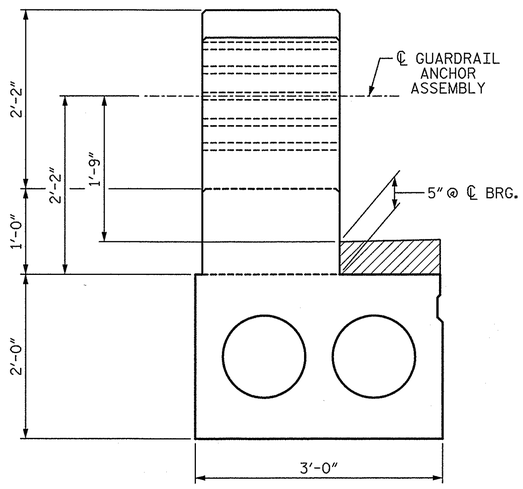

END VIEW

LOCATION OF GUARDRAIL ANCHOR AT END POST

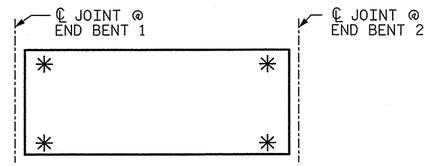

SKETCH SHOWING POINTS OF ATTACHMENT

✳ DENOTES GUARDRAIL ANCHOR ASSEMBLY

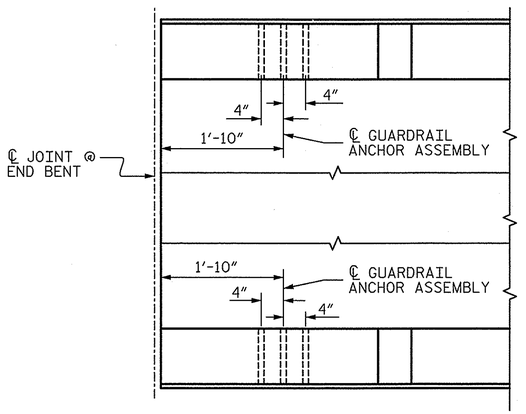

PLAN

END BENT 1 SHOWN, END BENT 2 SIMILAR

PROJECT NO. 17BP.8.R.41

LEE COUNTY

STATION: 15+44.00 -L-

STATE OF NORTH CAROLINA
DEPARTMENT OF TRANSPORTATION
RALEIGH

GUARDRAIL ANCHORAGE DETAILS

REVISIONS						SHEET NO.
NO.	BY:	DATE:	NO.	BY:	DATE:	S-10
1			3			TOTAL SHEETS
2			4			16

PLANS PREPARED BY:
SIMPSON ENGINEERS & ASSOCIATES
5640 Dillard Drive
Suite 200
Cary, NC 27518
(919) 852-0468
(919) 852-0598 (Fax)
www.simpsonengr.com
LICENSURE NO. C-2521

NORTH CAROLINA PROFESSIONAL SEAL L1268 ENGINEER BETSY S. COX
8-14-13

DRAWN BY : T. BANKOVICH DATE : 8-13
CHECKED BY : B.S. COX DATE : 8-13

8/14/2013 10:48:58 AM G:\Projects\2012\17BP.8.R.41 (Lee 50)\Structures\Drawings\Final\lee50_sd_NEW_super_8-5-2013.dgn

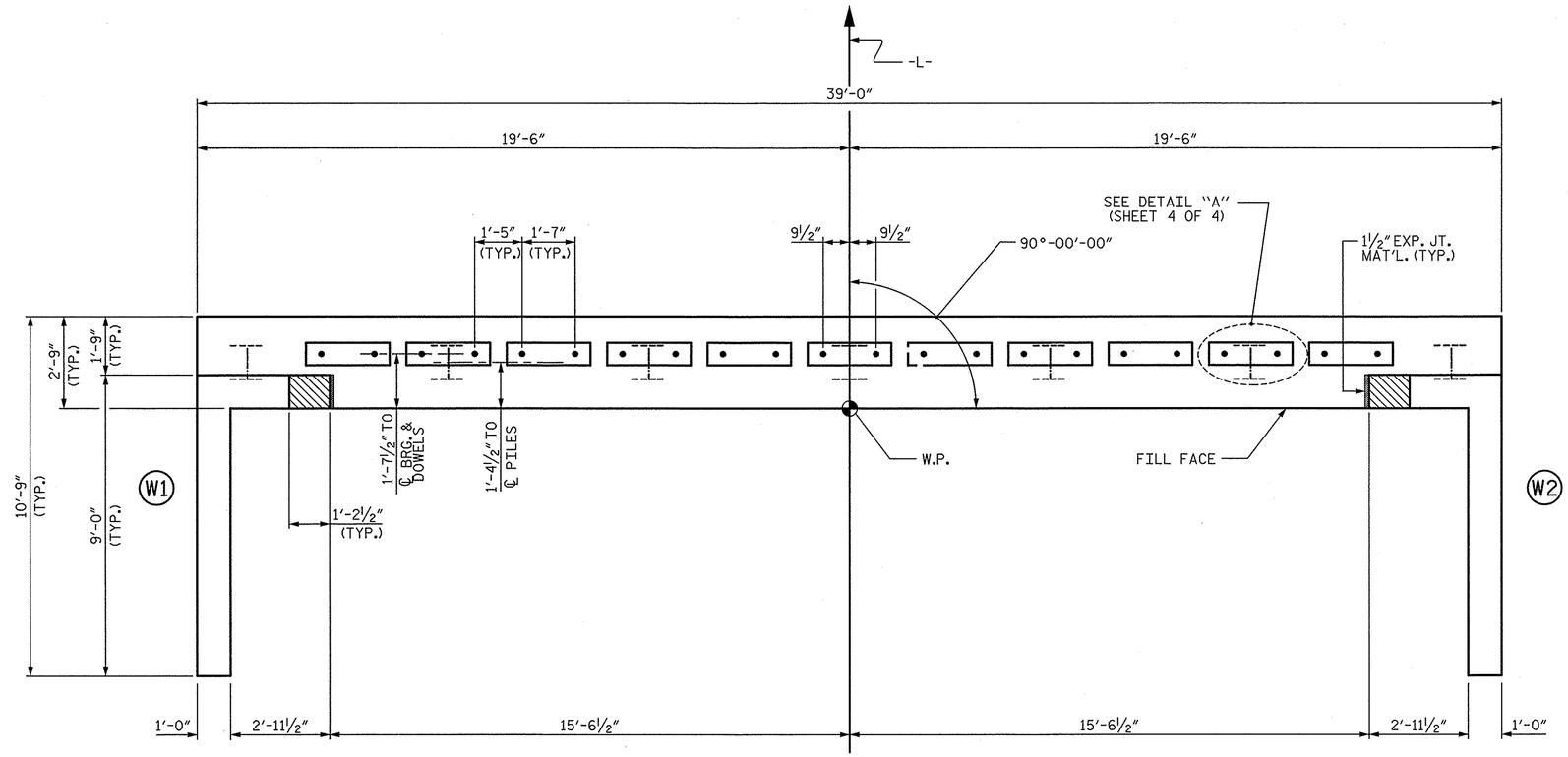

PLAN

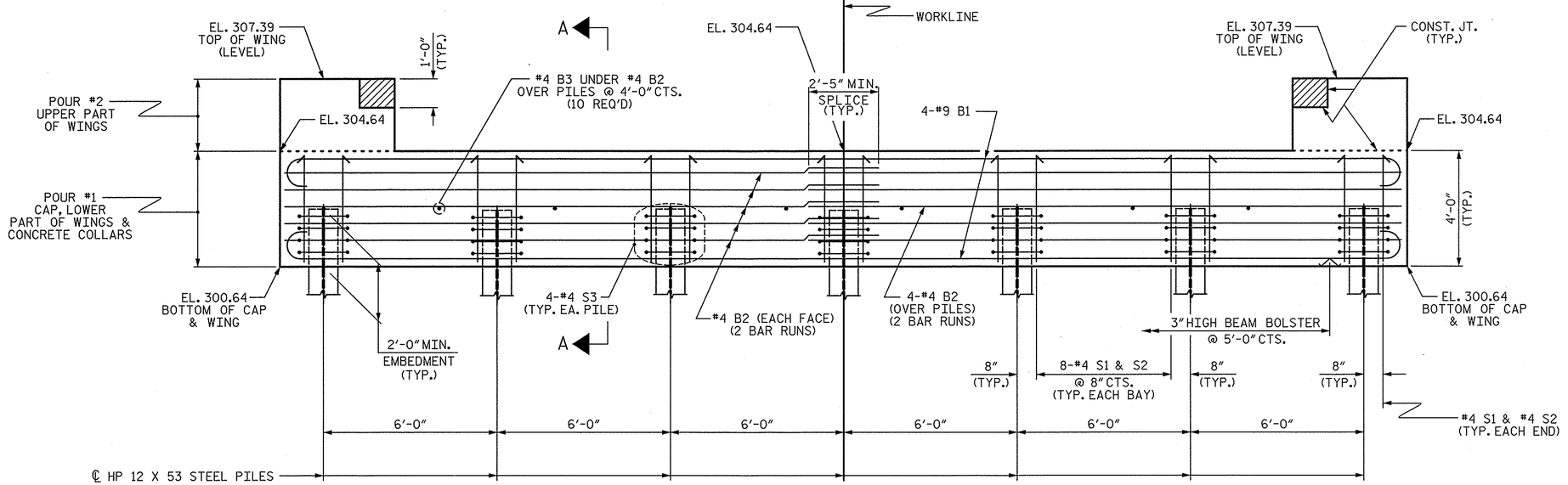

ELEVATION

WINGS NOT SHOWN FOR CLARITY.
FOR SECTION A-A, SEE SHEET 4 OF 4.
CONCRETE COLLARS FOR STEEL PILES NOT SHOWN IN PLAN AND ELEVATION VIEWS FOR CLARITY.
SEE "CORROSION PROTECTION FOR STEEL PILES DETAIL", SHEET 4 OF 4.

NOTES:

STIRRUPS IN CAP MAY BE SHIFTED AS NECESSARY TO CLEAR DOWELS.

THE CONCRETE IN THE SHADED AREA OF THE WING SHALL BE POURED AFTER THE PARAPET AND END POSTS ARE CAST IF SLIP FORMING IS USED.

FOR PILE SPLICE DETAILS, SEE SHEET 4 OF 4.

FOR WING DETAILS, SEE SHEET 3 OF 4.

PROJECT NO. 17BP.8.R.41
LEE COUNTY
STATION: 15+44.00 -L-

SHEET 1 OF 4

STATE OF NORTH CAROLINA
DEPARTMENT OF TRANSPORTATION
RALEIGH

SUBSTRUCTURE END BENT 1

REVISIONS						SHEET NO.
NO.	BY:	DATE:	NO.	BY:	DATE:	S-11
1			3			TOTAL SHEETS
2			4			16

PLANS PREPARED BY:
SIMPSON ENGINEERS & ASSOCIATES
5640 Dillard Drive
Suite 200
Cary, NC 27518
(919) 852-0468
(919) 852-0598 (Fax)
www.simpsonengr.com
LICENSURE NO. C-2521

NORTH CAROLINA PROFESSIONAL SEAL L1268 ENGINEER BETSY S. COX
8/14/13

DRAWN BY : T. BANKOVICH DATE : 8-13
CHECKED BY : B.S. COX DATE : 8-13

8/14/2013 10:48:58 AM G:\Projects\2012\17BP.8.R.41 (Lee 50)\Structures\Drawings\Final\lee50_sd_NEW_sub_8-9-2013.dgn

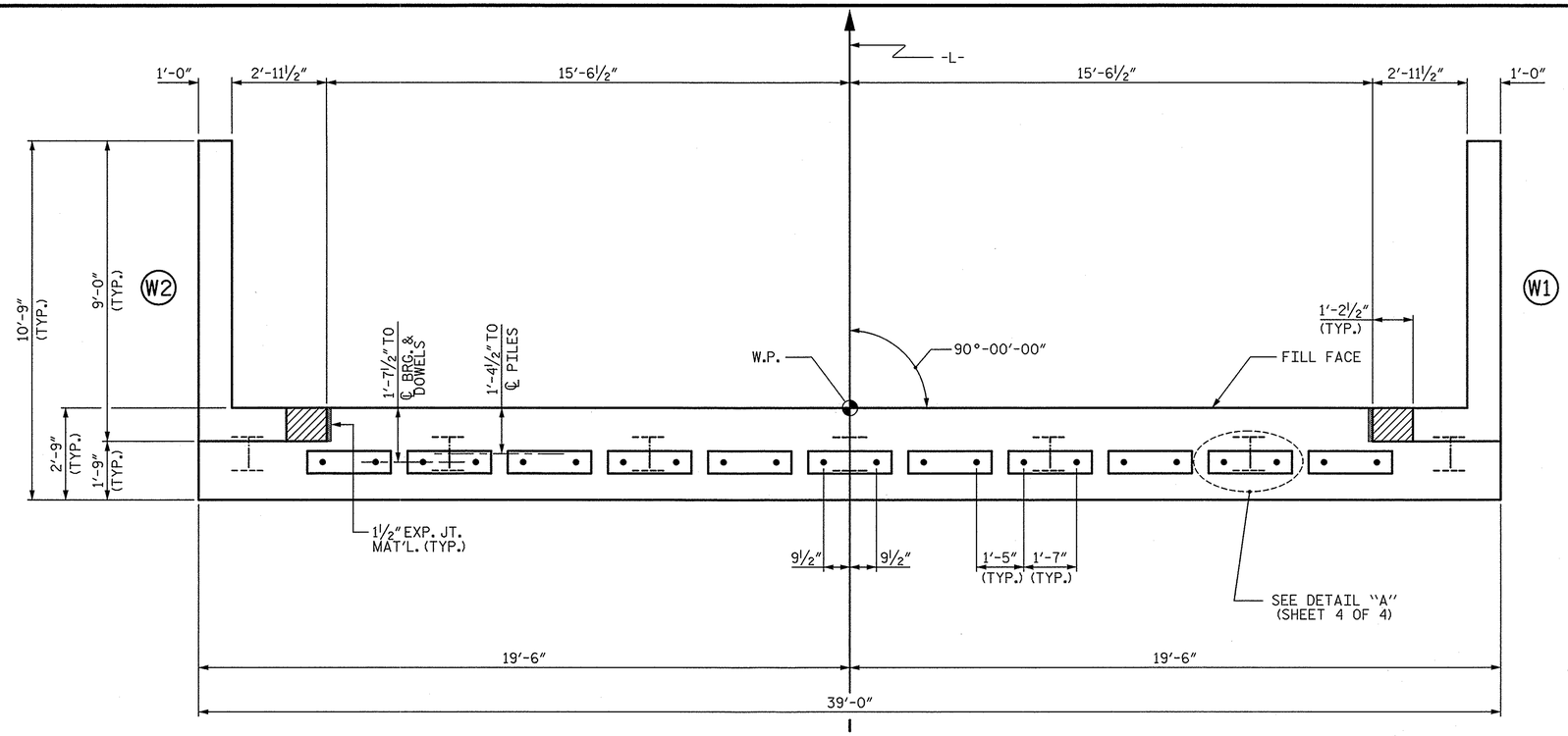

PLAN

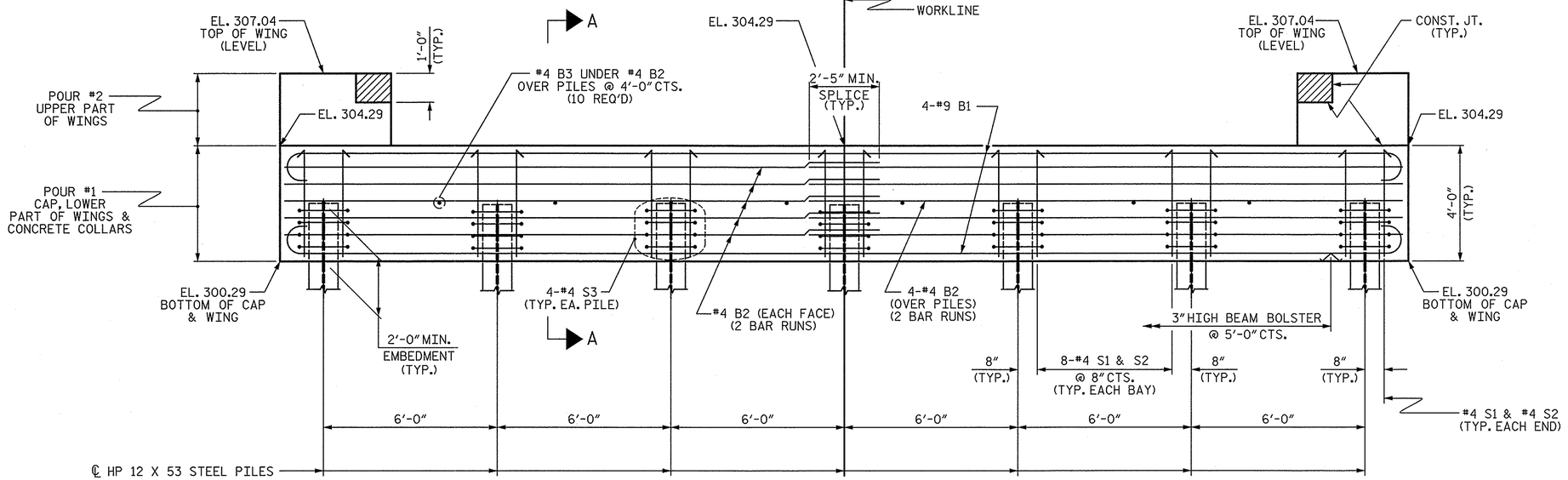

ELEVATION

WINGS NOT SHOWN FOR CLARITY.
FOR SECTION A-A, SEE SHEET 4 OF 4.
CONCRETE COLLARS FOR STEEL PILES NOT SHOWN IN PLAN AND ELEVATION VIEWS FOR CLARITY.
SEE "CORROSION PROTECTION FOR STEEL PILES DETAIL", SHEET 4 OF 4.

NOTES:

STIRRUPS IN CAP MAY BE SHIFTED AS NECESSARY TO CLEAR DOWELS.

THE CONCRETE IN THE SHADED AREA OF THE WING SHALL BE POURED AFTER THE PARAPET AND END POSTS ARE CAST IF SLIP FORMING IS USED.

FOR PILE SPLICE DETAILS, SEE SHEET 4 OF 4.

FOR WING DETAILS, SEE SHEET 3 OF 4.

PROJECT NO. 17BP.8.R.41
LEE COUNTY
STATION: 15+44.00 -L-

SHEET 2 OF 4

STATE OF NORTH CAROLINA
DEPARTMENT OF TRANSPORTATION
RALEIGH

SUBSTRUCTURE END BENT 2

REVISIONS						SHEET NO.
NO.	BY:	DATE:	NO.	BY:	DATE:	S-12
1			3			TOTAL SHEETS
2			4			16

PLANS PREPARED BY:
SIMPSON ENGINEERS & ASSOCIATES
5640 Dillard Drive
Suite 200
Cary, NC 27518
(919) 852-0468
(919) 852-0598 (Fax)
www.simpsonengr.com
LICENSURE NO. C-2521

NORTH CAROLINA PROFESSIONAL SEAL 11268 ENGINEER BETSY S. COX
Betsy S. Cox 8-14-13

DRAWN BY : T. BANKOVICH DATE : 8-13
CHECKED BY : B.S. COX DATE : 8-13

8/14/2013 10:48:58 AM G:\Projects\2012\17BP.8.R.41 (Lee 50)\Structures\Drawings\Final\lee50_sd_NEW_sub_8-9-2013.dgn

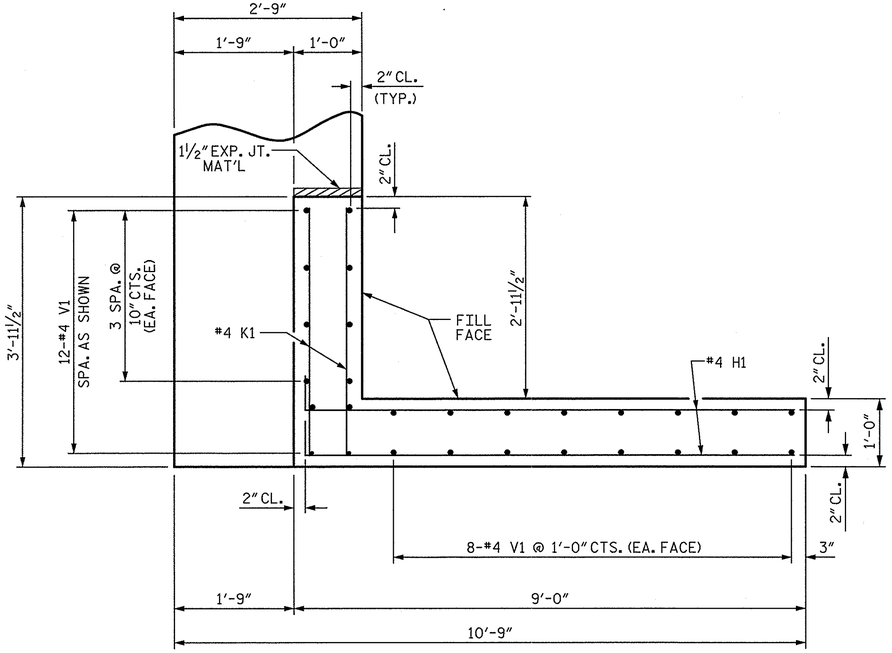

PLAN OF WING (W1)

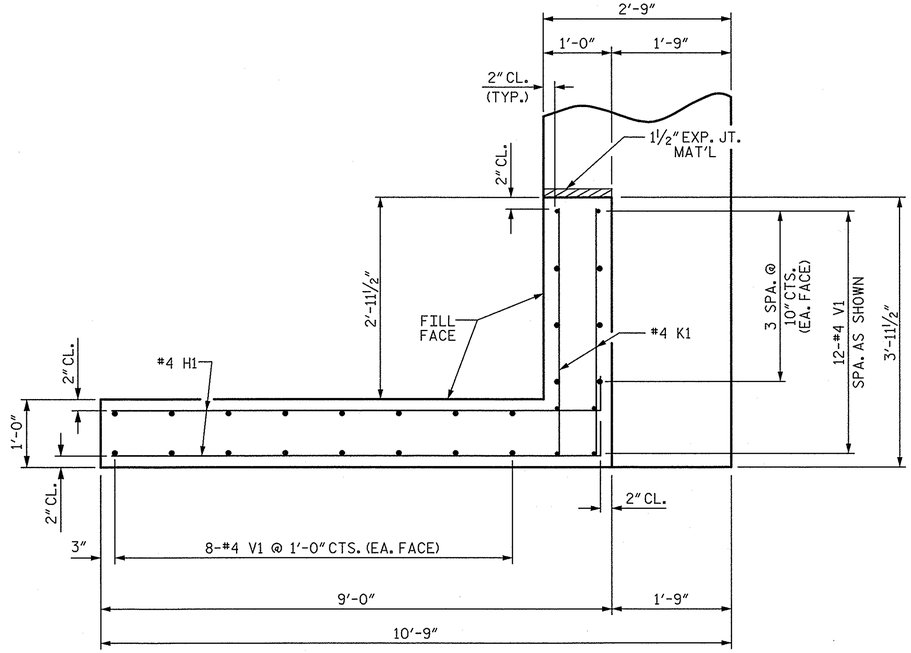

PLAN OF WING (W2)

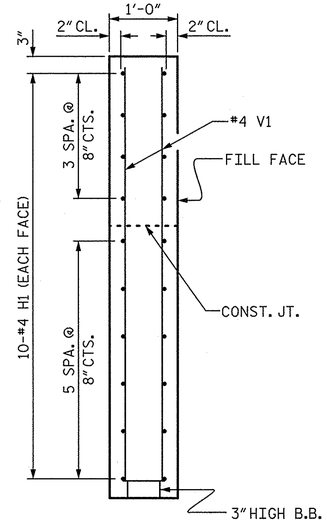

SECTION X-X

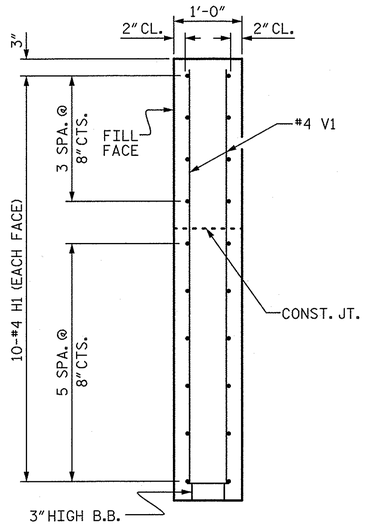

SECTION Y-Y

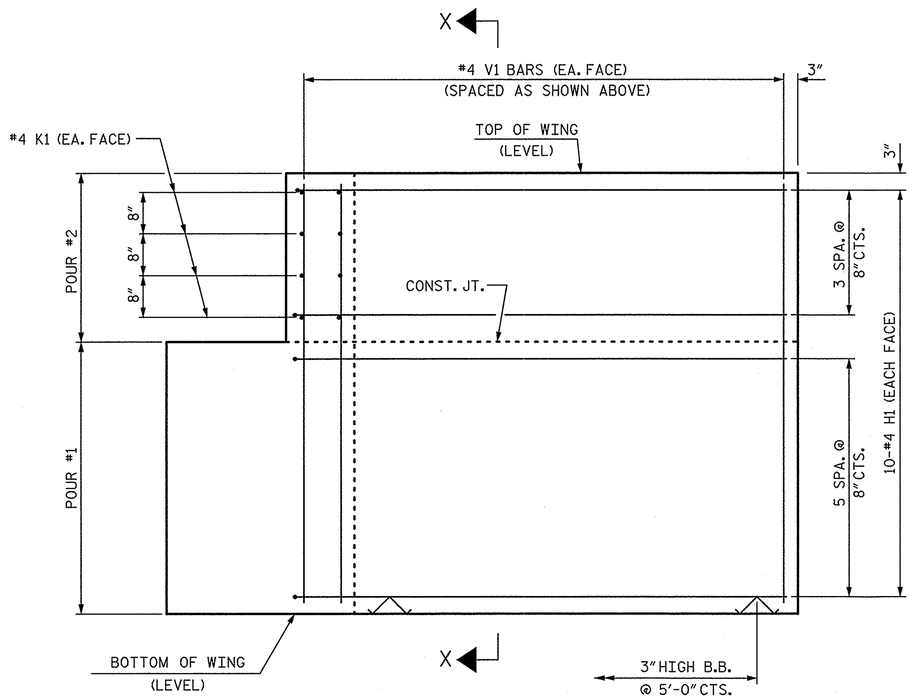

ELEVATION OF WING (W1)

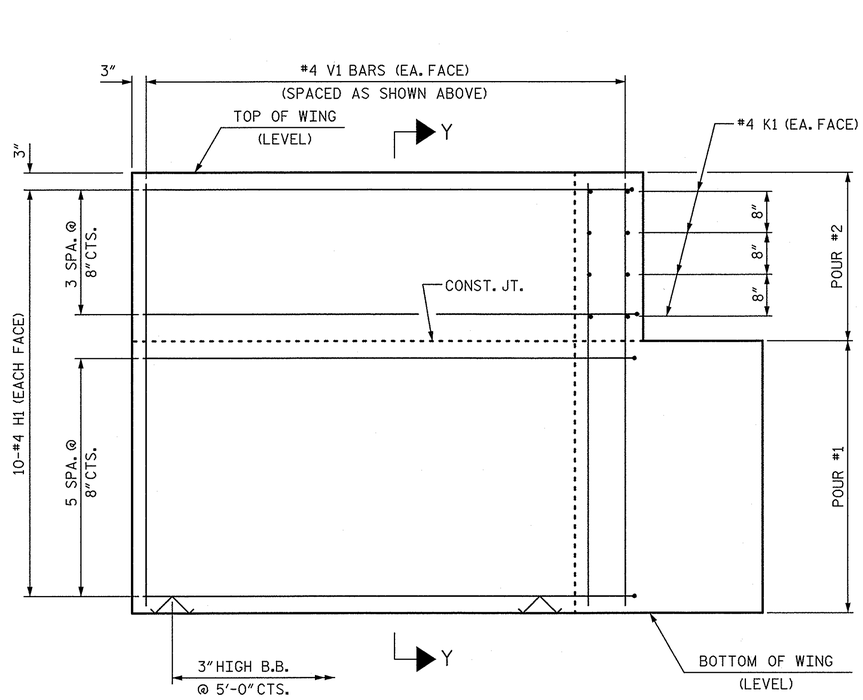

ELEVATION OF WING (W2)

WING DETAILS

PLANS PREPARED BY:
SIMPSON ENGINEERS & ASSOCIATES
5640 Dillard Drive
Suite 200
Cary, NC 27518
(919) 852-0468
(919) 852-0598 (Fax)
www.simpsonengr.com
LICENSURE NO. C-2521

NORTH CAROLINA PROFESSIONAL SEAL L2268 ENGINEER BETSY S. COX
8-14-13

DRAWN BY : T. BANKOVICH DATE : 8-13
CHECKED BY : B.S. COX DATE : 8-13

PROJECT NO. 17BP.8.R.41
LEE COUNTY
STATION: 15+44.00 -L-

SHEET 3 OF 4

STATE OF NORTH CAROLINA
DEPARTMENT OF TRANSPORTATION
RALEIGH

SUBSTRUCTURE END BENT WING DETAILS

REVISIONS						SHEET NO.
NO.	BY:	DATE:	NO.	BY:	DATE:	S-13
1			3			TOTAL SHEETS
2			4			16

8/14/2013 10:48:58 AM G:\Projects\2012\17BP.8.R.41 (Lee 50)\Structures\Drawings\Final\lee50_sd_NEW_sub_8-9-2013.dgn

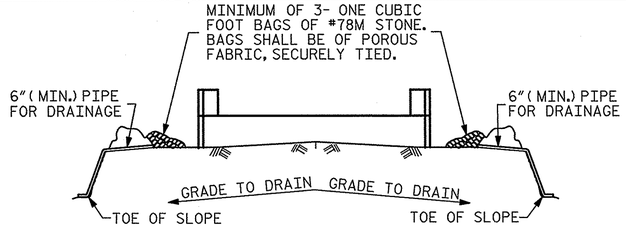

BAGGED STONE AND PIPE SHALL BE PLACED IMMEDIATELY AFTER COMPLETION OF END BENT EXCAVATION. PIPE MAY BE EITHER CONCRETE, CORRUGATED STEEL, CORRUGATED ALUMINUM ALLOY, OR CORRUGATED PLASTIC. PERFORATED PIPE WILL NOT BE ALLOWED.

BAGGED STONE SHALL REMAIN IN PLACE UNTIL THE ENGINEER DIRECTS THAT IT BE REMOVED. THE CONTRACTOR SHALL REMOVE AND DISPOSE OF SILT ACCUMULATIONS AT BAGGED STONE WHEN SO DIRECTED BY THE ENGINEER. BAGS SHALL BE REMOVED AND REPLACED WHENEVER THE ENGINEER DETERMINES THAT THEY HAVE DETERIORATED AND LOST THEIR EFFECTIVENESS.

NO SEPARATE PAYMENT WILL BE MADE FOR THIS WORK AND THE ENTIRE COST OF THIS WORK SHALL BE INCLUDED IN THE UNIT CONTRACT PRICE BID FOR THE SEVERAL PAY ITEMS.

TEMPORARY DRAINAGE AT END BENT

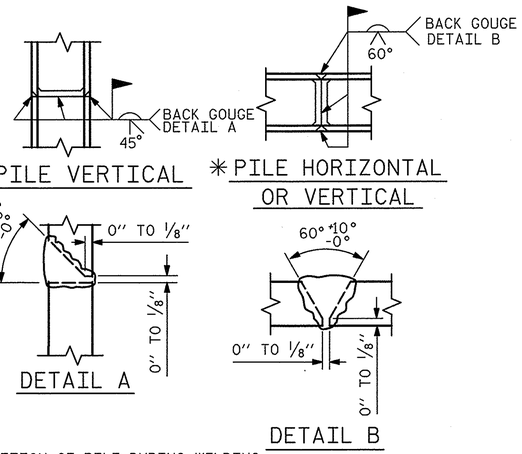

* POSITION OF PILE DURING WELDING.

PILE SPLICE DETAILS

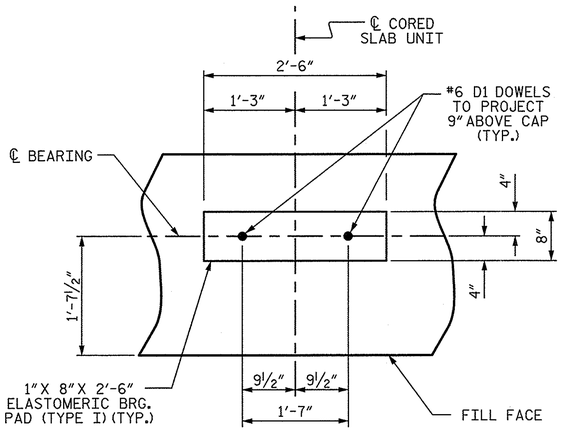

DETAIL "A"

(END BENT No. 1 SHOWN, END BENT No. 2 SIMILAR BY ROTATION)

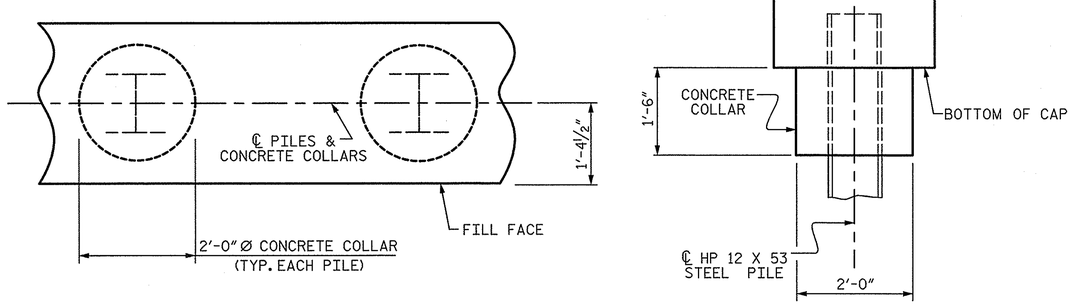

PLAN ELEVATION

CORROSION PROTECTION FOR STEEL PILES DETAIL

(END BENT No. 1 SHOWN, END BENT No. 2 SIMILAR BY ROTATION)

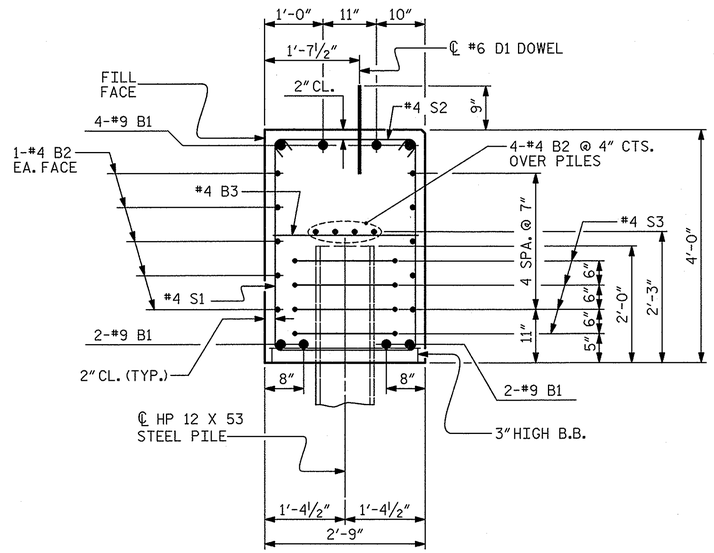

SECTION A-A

(CONCRETE COLLAR NOT SHOWN FOR CLARITY. SEE "CORROSION PROTECTION FOR STEEL PILES DETAIL.")

BAR TYPES

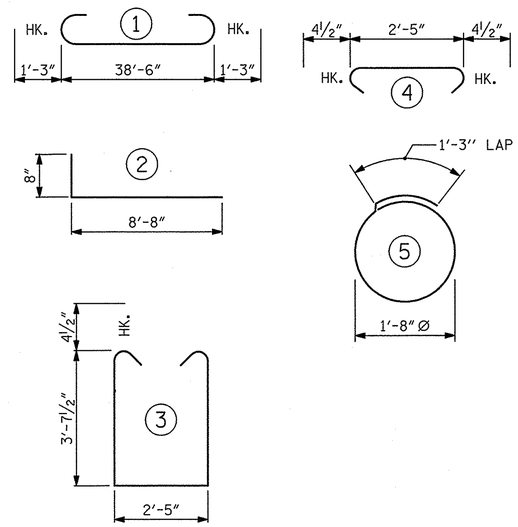

ALL BAR DIMENSIONS ARE OUT TO OUT.

END BENT 1	END BENT 2
HP 12 X 53 STEEL PILES	HP 12 X 53 STEEL PILES
NO: 7 LIN. FT.= 105	NO: 7 LIN. FT.= 70
STEEL PILE POINTS NO. = 7	STEEL PILE POINTS NO. = 7

PILE EXCAVATION IN SOIL LIN. FT. = 35

PILE EXCAVATION NOT IN SOIL LIN. FT. = 35

BILL OF MATERIAL

FOR ONE END BENT

BAR	NO.	SIZE	TYPE	LENGTH	WEIGHT
B1	8	#9	1	41'-0"	1115
B2	28	#4	STR	20'-7"	385
B3	10	#4	STR	2'-5"	16
D1	22	#6	STR	1'-6"	50
H1	40	#4	2	9'-4"	249
K1	16	#4	STR	3'-7"	38
S1	50	#4	3	10'-5"	348
S2	50	#4	4	3'-2"	106
S3	28	#4	5	6'-6"	122
V1	56	#4	STR	6'-2"	231

REINFORCING STEEL (FOR ONE END BENT) 2660 LBS.

CLASS A CONCRETE BREAKDOWN (FOR ONE END BENT)

POUR #1 CAP, LOWER PART OF WINGS & COLLARS 19.5 C.Y.

POUR #2 UPPER PART OF WINGS 2.4 C.Y.

TOTAL CLASS A CONCRETE 21.9 C.Y.

PLANS PREPARED BY:
SIMPSON ENGINEERS & ASSOCIATES
5640 Dillard Drive
Suite 200
Cary, NC 27518
(919) 852-0468
(919) 852-0598 (Fax)
www.simpsonengr.com
LICENSURE NO. C-2521

NORTH CAROLINA PROFESSIONAL SEAL 11268 ENGINEER BETSY S. COX 8/14/13

STATE OF NORTH CAROLINA
DEPARTMENT OF TRANSPORTATION
RALEIGH

SUBSTRUCTURE END BENT 1 & 2 DETAILS

PROJECT NO. 17BP.8.R.41
LEE COUNTY
STATION: 15+44.00 -L-

SHEET 4 OF 4

REVISIONS						SHEET NO.
NO.	BY:	DATE:	NO.	BY:	DATE:	S-14
1			3			TOTAL SHEETS
2			4			16

DRAWN BY : T. BANKOVICH DATE : 8-13
CHECKED BY : B.S. COX DATE : 8-13

8/14/2013 10:48:58 AM G:\Projects\2012\17BP.8.R.41 (Lee 50)\Structures\Drawings\Final\lee50_sd_NEW_sub_8-9-2013.dgn

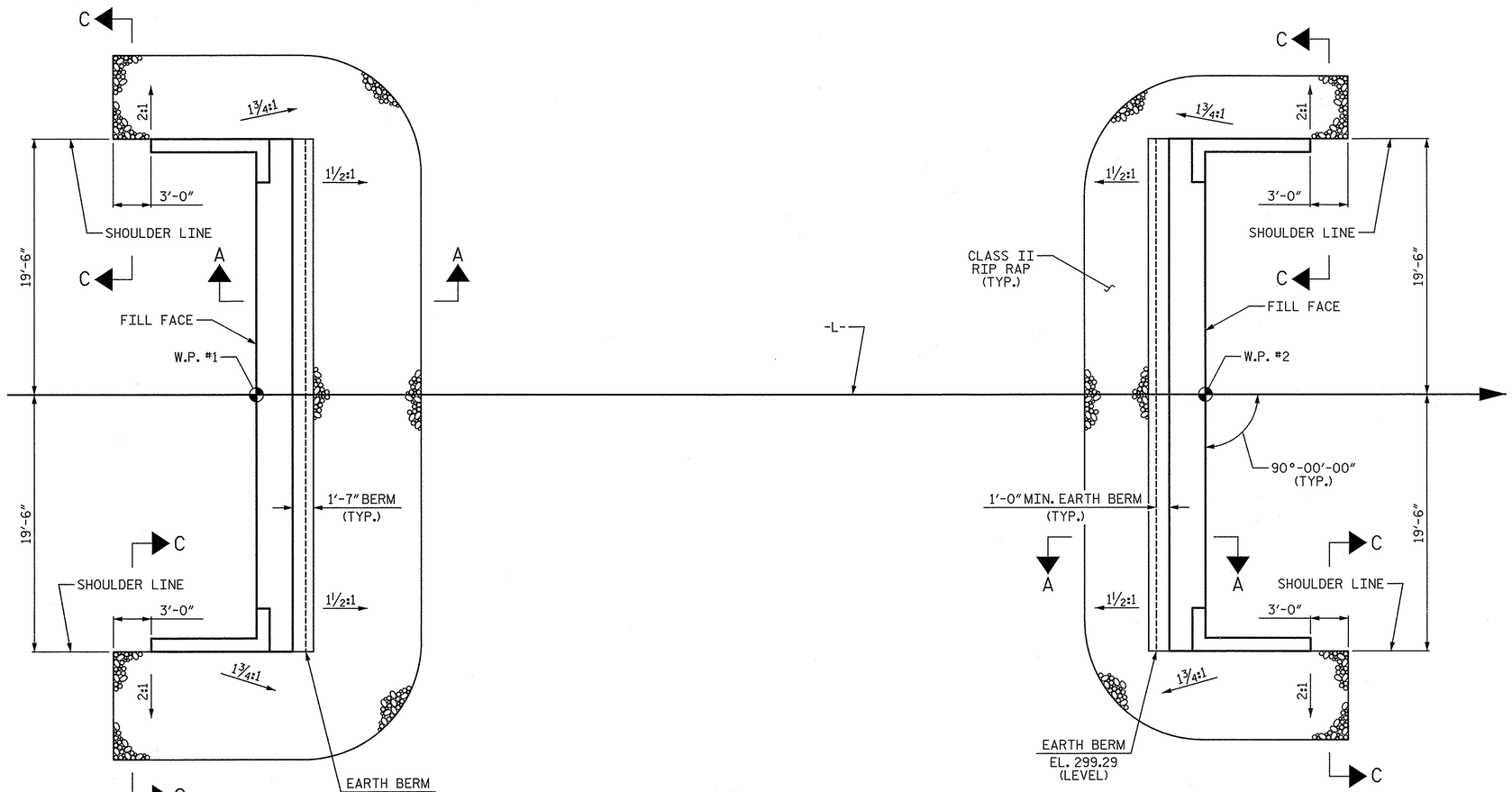

@ END BENT 1

PLAN OF RIP RAP

@ END BENT 2

ESTIMATED QUANTITIES		
BRIDGE @ STA. 15+44.00 -L-	RIP RAP CLASS II (2'-0" THICK)	GEOTEXTILE FOR DRAINAGE
	TONS	SQUARE YARDS
END BENT 1	120	135
END BENT 2	90	100

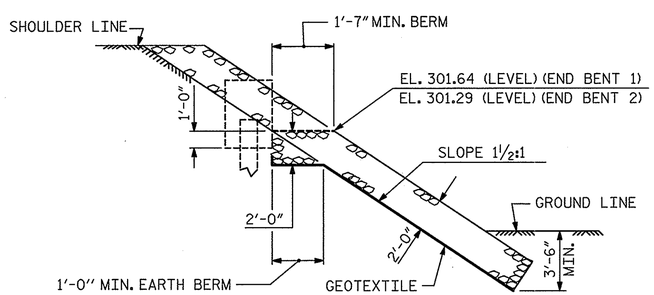

SECTION A-A

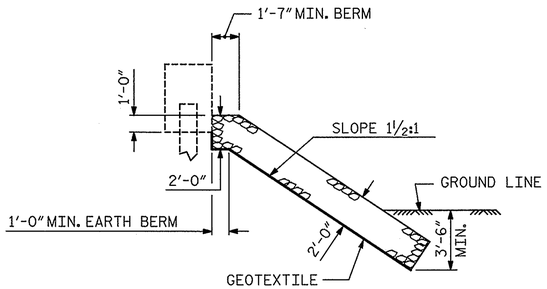

℄ SECTION BERM RIP RAPPED

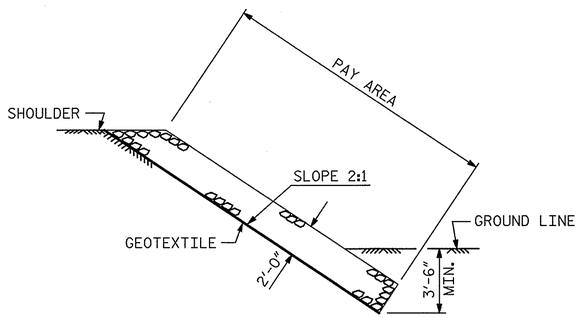

SECTION C-C

PROJECT NO. 17BP.8.R.41

LEE COUNTY

STATION: 15+44.00 -L-

PLANS PREPARED BY:

SIMPSON ENGINEERS & ASSOCIATES
5640 Dillard Drive
Suite 200
Cary, NC 27518
(919) 852-0468
(919) 852-0598 (Fax)
www.simpsonengr.com
LICENSURE NO. C-2521

NORTH CAROLINA PROFESSIONAL SEAL 11268 ENGINEER BETSY S. COX
Betsy S. Cox 8/13

STATE OF NORTH CAROLINA
DEPARTMENT OF TRANSPORTATION
RALEIGH

RIP RAP DETAILS

REVISIONS						SHEET NO.
NO.	BY:	DATE:	NO.	BY:	DATE:	S-15
1			3			TOTAL SHEETS
2			4			16

DRAWN BY : T. BANKOVICH DATE : 8-13
CHECKED BY : B.S. COX DATE : 8-13

8/14/2013 10:48:59 AM G:\Projects\2012\17BP.8.R.41 (Lee 50)\Structures\Drawings\Final\lee50_sd_rr.dgn

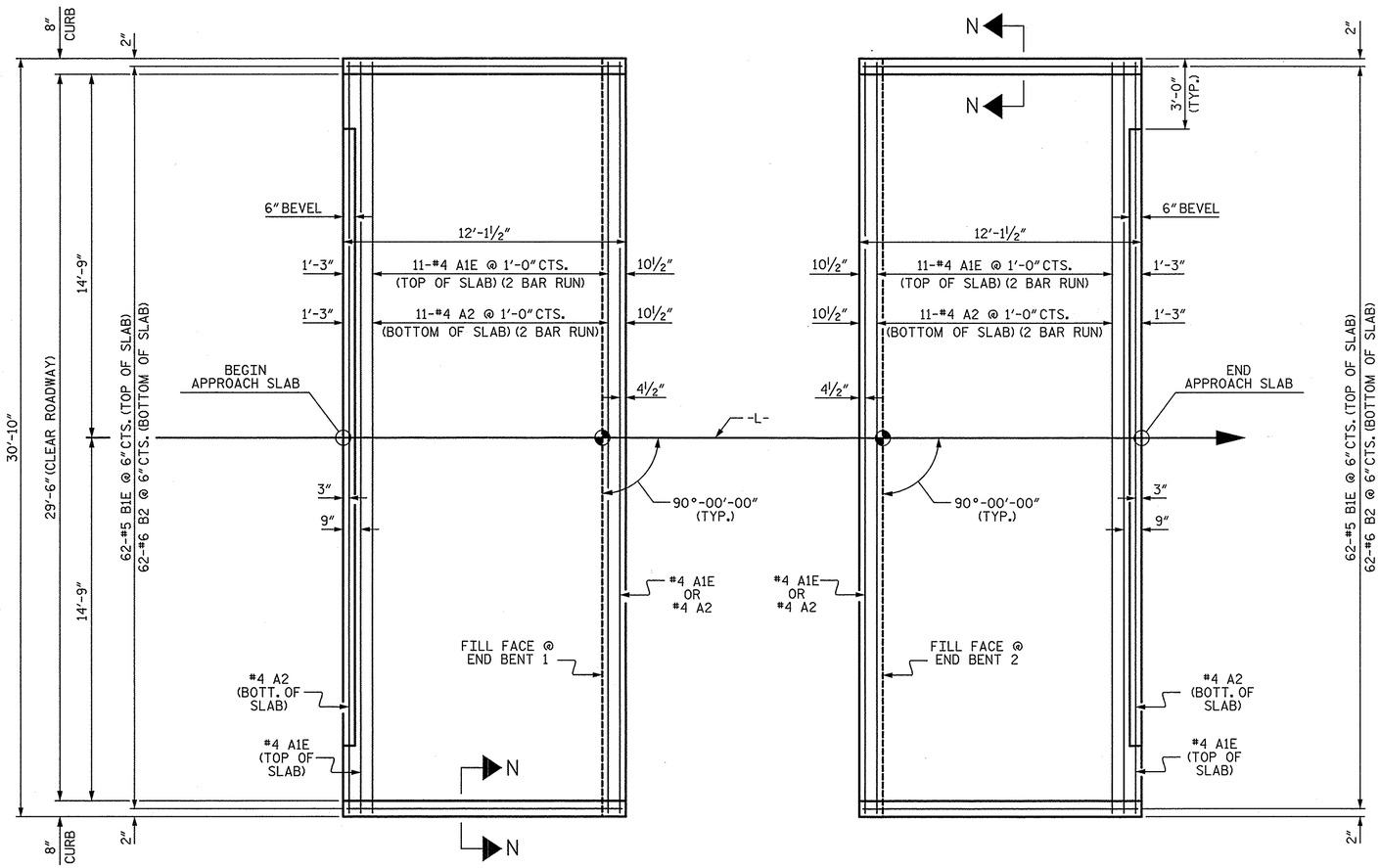

PLAN @ END BENT 1

PLAN @ END BENT 2

DIMENSIONS SHOWN ARE TYPICAL FOR BOTH APPROACH SLABS

NOTES:

FOR BRIDGE APPROACH FILL INCLUDING GEOTEXTILE, 4" Ø DRAINAGE PIPE, AND #78M STONE BACKFILL, SEE ROADWAY PLANS.

GEOTEXTILE SHALL BE TYPE 1IN ACCORDANCE WITH THE STANDARD SPECIFICATIONS SECTION 1056.

#78M STONE BACKFILL (CLASS V SELECT MATERIAL) SHALL BE IN ACCORDANCE WITH STANDARD SPECIFICATIONS SECTION 1016.

#78M STONE BACKFILL IS TO BE CONTINUOUS ALONG FILL FACE OF BACKWALL FROM OUTSIDE EDGE TO OUTSIDE EDGE OF APPROACH SLAB.

FOR THE 4" Ø DRAINAGE PIPE OUTLET(S), SEE ROADWAY STANDARD DRAWINGS.

AREA BETWEEN THE WINGWALL AND APPROACH SLAB SHALL BE GRADED TO DRAIN THE WATER AWAY FROM THE FILL FACE OF THE BRIDGE AND SHALL BE PAVED. SEE ROADWAY PLANS.

APPROACH SLAB GROOVING IS NOT REQUIRED.

BILL OF MATERIAL

APPROACH SLAB AT EB 1

BAR	NO.	SIZE	TYPE	LENGTH	WEIGHT
A1E	26	#4	STR	16'-3"	282
A2	26	#4	STR	16'-2"	281
B1E	62	#5	STR	11'-2"	722
B2	62	#6	STR	11'-8"	1086
REINFORCING STEEL				LBS.	1367
"E" EPOXY COATED REINFORCING STEEL				LBS.	1004
CLASS AA CONCRETE				C.Y.	19.1

APPROACH SLAB AT EB 2

BAR	NO.	SIZE	TYPE	LENGTH	WEIGHT
A1E	26	#4	STR	16'-3"	282
A2	26	#4	STR	16'-2"	281
B1E	62	#5	STR	11'-2"	722
B2	62	#6	STR	11'-8"	1086
REINFORCING STEEL				LBS.	1367
"E" EPOXY COATED REINFORCING STEEL				LBS.	1004
CLASS AA CONCRETE				C.Y.	19.1

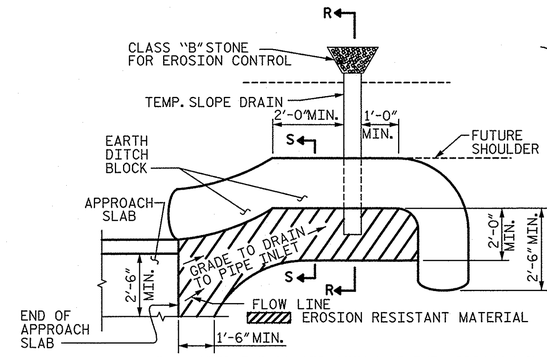

NOTE: IMMEDIATELY AFTER THE CONSTRUCTION OF THE APPROACH SLAB, THE CONTRACTOR SHALL PROVIDE TEMPORARY BERM AND SLOPE DRAIN. CONTRACTOR SHALL GRADE TO PIPE INLET AND PROVIDE EROSION RESISTANT MATERIAL AS SHOWN. THE EROSION RESISTANT MATERIAL SHALL BE EITHER 1) ASPHALT PLANT MIX, TYPE 1 OR TYPE 2, MIN. 2" DEPTH, 2) EROSION CONTROL MAT, OR 3) CONCRETE, AS DIRECTED BY THE ENGINEER. THE SLOPE DRAIN SHALL CONSIST OF A NON-PERFORATED TEMPORARY DRAINAGE PIPE, 12 INCHES IN DIAMETER.

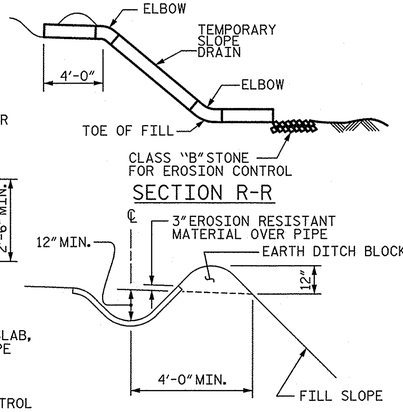

SECTION R-R

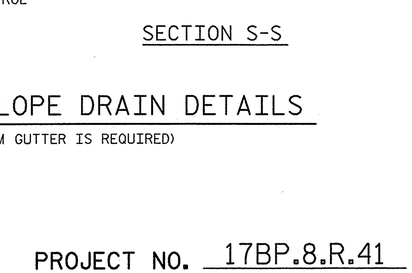

SECTION S-S

PLAN VIEW

TEMPORARY BERM AND SLOPE DRAIN DETAILS

(TO BE USED WHEN SHOULDER BERM GUTTER IS REQUIRED)

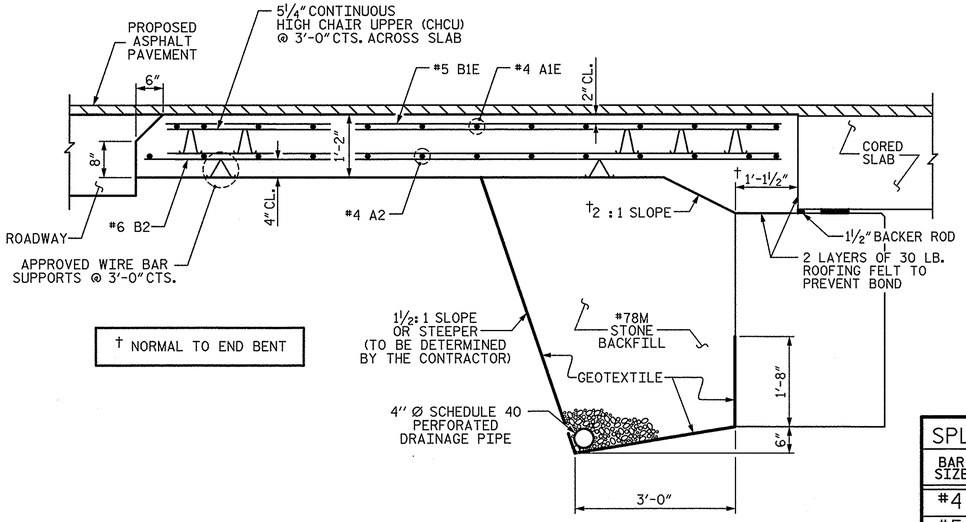

† NORMAL TO END BENT

SECTION THRU SLAB

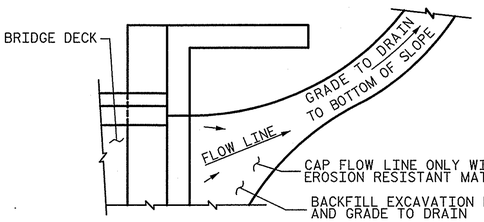

NOTE: IF THE APPROACH SLAB IS NOT CONSTRUCTED IMMEDIATELY AFTER THE BACKFILLING OF THE END BENT EXCAVATION, GRADE TO DRAIN TO THE BOTTOM OF THE SLOPE AND PROVIDE EROSION RESISTANT MATERIAL, SUCH AS FIBERGLASS ROVING OR AS DIRECTED BY THE ENGINEER TO PREVENT SOIL EROSION AND TO PROTECT THE AREA ADJACENT TO THE STRUCTURE. THE CONTRACTOR WILL BE REQUIRED TO REMOVE THESE MATERIALS PRIOR TO CONSTRUCTION OF THE APPROACH SLAB.

TEMPORARY DRAINAGE DETAIL

SPLICE LENGTHS		
BAR SIZE	EPOXY COATED	UNCOATED
#4	2'-0"	1'-9"
#5	2'-6"	2'-2"
#6	3'-10"	2'-7"

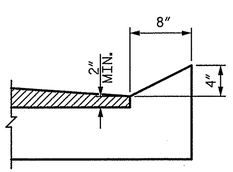

SECTION N-N

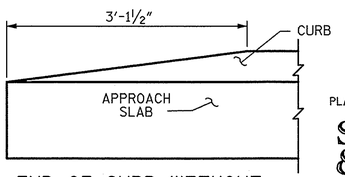

END OF CURB WITHOUT SHOULDER BERM GUTTER

CURB DETAILS

PROJECT NO. 17BP.8.R.41

LEE COUNTY

STATION: 15+44.00 -L-

DRAWN BY : T. BANKOVICH DATE : 8-13

CHECKED BY : B.S. COX DATE : 8-13

PLANS PREPARED BY:

SIMPSON ENGINEERING & ASSOCIATES

5640 Dillard Drive
Suite 200
Cary, NC 27518
(919) 852-0468
(919) 852-0598 (Fax)
www.simpsonengr.com

LICENSURE NO. C-2521

NORTH CAROLINA PROFESSIONAL SEAL 11268 ENGINEER BETSY S. COX

8-14-13

STATE OF NORTH CAROLINA
DEPARTMENT OF TRANSPORTATION
RALEIGH

BRIDGE APPROACH SLAB FOR PRESTRESSED CONCRETE CORED SLAB UNIT (SUB-REGIONAL TIER) 90° SKEW

REVISIONS						SHEET NO.
NO.	BY:	DATE:	NO.	BY:	DATE:	S-16
1			3			TOTAL SHEETS
2			4			16

8/14/2013 10:48:59 AM G:\Projects\2012\17BP.8.R.41 (Lee 50)\Structures\Drawings\Final\lee50_sd_NEW_as_8-9-2013.dgn

STANDARD NOTES

DESIGN DATA:

SPECIFICATIONS	A.A.S.H.T.O. (CURRENT)
LIVE LOAD	SEE PLANS
IMPACT ALLOWANCE	SEE A.A.S.H.T.O.
STRESS IN EXTREME FIBER OF	
STRUCTURAL STEEL - AASHTO M270 GRADE 36	20,000 LBS. PER SQ. IN.
- AASHTO M270 GRADE 50W	27,000 LBS. PER SQ. IN.
- AASHTO M270 GRADE 50	27,000 LBS. PER SQ. IN.
REINFORCING STEEL IN TENSION	
GRADE 60	24,000 LBS. PER SQ. IN.
CONCRETE IN COMPRESSION	1,200 LBS. PER SQ. IN.
CONCRETE IN SHEAR	SEE A.A.S.H.T.O.
STRUCTURAL TIMBER - TREATED OR	
UNTREATED - EXTREME FIBER STRESS	1,800 LBS. PER SQ. IN.
COMPRESSION PERPENDICULAR TO GRAIN OF TIMBER	375 LBS. PER SQ. IN.
EQUIVALENT FLUID PRESSURE OF EARTH	30 LBS. PER CU. FT. (MINIMUM)

MATERIAL AND WORKMANSHIP:

EXCEPT AS MAY OTHERWISE BE SPECIFIED ON PLANS OR IN THE SPECIAL PROVISIONS, ALL MATERIAL AND WORKMANSHIP SHALL BE IN ACCORDANCE WITH THE 2012 "STANDARD SPECIFICATIONS FOR ROADS AND STRUCTURES" OF THE N. C. DEPARTMENT OF TRANSPORTATION.

STEEL SHEET PILING FOR PERMANENT OR TEMPORARY APPLICATIONS SHALL BE HOT ROLLED.

CONCRETE:

UNLESS OTHERWISE REQUIRED ON PLANS, CLASS A CONCRETE SHALL BE USED FOR ALL PORTIONS OF ALL STRUCTURES WITH THE EXCEPTION THAT: CLASS AA CONCRETE SHALL BE USED IN BRIDGE SUPERSTRUCTURES, ABUTMENT BACKWALLS, AND APPROACH SLABS; AND CLASS B CONCRETE SHALL BE USED FOR SLOPE PROTECTION AND RIP RAP.

CONCRETE CHAMFERS:

UNLESS OTHERWISE NOTED ON THE PLANS, ALL EXPOSED CORNERS ON STRUCTURES SHALL BE CHAMFERED 3/4" WITH THE FOLLOWING EXCEPTIONS: TOP CORNERS OF CURBS MAY BE ROUNDED TO 1-1/2" RADIUS WHICH IS BUILT INTO CURB FORMS; CORNERS OF TRANSVERSE FLOOR EXPANSION JOINTS SHALL BE ROUNDED WITH A 1/4" FINISHING TOOL UNLESS OTHERWISE REQUIRED ON PLANS; AND CORNERS OF EXPANSION JOINTS IN THE ROADWAY FACES AND TOPS OF CURBS AND SIDEWALKS SHALL BE ROUNDED TO A 1/4" RADIUS WITH A FINISHING STONE OR TOOL UNLESS OTHERWISE REQUIRED ON PLANS.

DOWELS:

DOWELS WHEN INDICATED ON PLANS AS FOR CULVERT EXTENSIONS, SHALL

ALLOWANCE FOR DEAD LOAD DEFLECTION, SETTLEMENT, ETC. IN CASTING SUPERSTRUCTURES:

BRIDGES SHALL BE BUILT ON THE GRADE OR VERTICAL CURVE SHOWN ON PLANS. SLABS, CURBS AND PARAPETS SHALL CONFORM TO THE GRADE OR CURVE.

ALL DIMENSIONS WHICH ARE GIVEN IN SECTION AND ARE AFFECTED BY DEAD LOAD DEFLECTIONS ARE DIMENSIONS AT CENTER LINE OF BEARING UNLESS OTHERWISE NOTED ON PLANS. IN SETTING FORMS FOR STEEL BEAM BRIDGES AND PRESTRESSED CONCRETE GIRDER BRIDGES, ADJUSTMENTS SHALL BE MADE DUE TO THE DEAD LOAD DEFLECTIONS FOR THE ELEVATIONS SHOWN. WHERE BLOCKS ARE SHOWN OVER BEAMS FOR BUILDING UP TO THE SLAB, THE VERTICAL DIMENSIONS OF THE BLOCKS SHALL BE ADJUSTED BETWEEN BEARINGS TO COMPENSATE FOR DEAD LOAD DEFLECTIONS, VERTICAL CURVE ORDINATE, AND ACTUAL BEAM CAMBER. WHERE BOTTOM OF SLAB IS IN LINE WITH BOTTOM OF TOP FLANGES, DEPTH OF SLAB BETWEEN BEARINGS SHALL BE ADJUSTED TO COMPENSATE FOR DEAD LOAD DEFLECTION, VERTICAL CURVE ORDINATE, AND ACTUAL BEAM CAMBER.

IN SETTING FALSEWORK AND FORMS FOR REINFORCED CONCRETE SPANS, AN ALLOWANCE SHALL BE MADE FOR DEAD LOAD DEFLECTIONS, SETTLEMENT OF FALSEWORK, AND PERMANENT CAMBER WHICH SHALL BE PROVIDED FOR IN ADDITION TO THE ELEVATIONS SHOWN. AFTER REMOVAL OF THE FALSEWORK, THE FINISHED STRUCTURES SHALL CONFORM TO THE PROFILE AND ELEVATIONS SHOWN ON THE PLANS AND CONSTRUCTION ELEVATIONS FURNISHED BY THE ENGINEER.

DETAILED DRAWINGS FOR FALSEWORK OR FORMS FOR BRIDGE SUPERSTRUCTURE AND ANY STRUCTURE OR PARTS OF A STRUCTURE AS NOTED ON THE PLANS SHALL BE SUBMITTED TO THE ENGINEER FOR APPROVAL BEFORE CONSTRUCTION OF THE FALSEWORK OR FORMS IS STARTED.

REINFORCING STEEL:

ALL REINFORCING STEEL SHALL BE DEFORMED. DIMENSIONS RELATIVE TO PLACEMENT OF REINFORCING ARE TO CENTERS OF BARS UNLESS OTHERWISE INDICATED IN THE PLANS. DIMENSIONS ON BAR DETAILS ARE TO CENTERS OF BARS OR ARE OUT TO OUT AS INDICATED ON PLANS.

WIRE BAR SUPPORTS SHALL BE PROVIDED FOR REINFORCING STEEL WHERE INDICATED ON THE PLANS. WHEN BAR SUPPORT PIECES ARE PLACED IN CONTINUOUS LINES, THEY SHALL BE SO PLACED THAT THE ENDS OF THE SUPPORTING WIRES SHALL BE LAPPED TO LOCK LEGS ON ADJOINING PIECES.

STRUCTURAL STEEL:

AT THE CONTRACTOR'S OPTION, HE MAY SUBSTITUTE 7/8" Ø SHEAR STUDS FOR THE 3/4" Ø STUDS SPECIFIED ON THE PLANS. THIS SUBSTITUTION SHALL BE MADE AT THE RATE OF 3 - 7/8" Ø STUDS FOR 4 - 3/4" Ø STUDS, AND STUD SPACING CHANGES SHALL BE MADE AS NECESSARY TO PROVIDE THE SAME EQUIVALENT NUMBER OF 7/8" Ø STUDS ALONG THE BEAM AS SHOWN FOR 3/4" Ø STUDS BASED ON THE RATIO OF 3 - 7/8" Ø STUDS FOR 4 - 3/4" Ø STUDS. STUDS OF THE LENGTH SPECIFIED ON THE PLANS MUST BE PROVIDED. THE MAXIMUM SPACING SHALL BE 2'-0".

EXCEPT AT THE INTERIOR SUPPORTS OF CONTINUOUS BEAMS WHERE THE COVER PLATE IS IN CONTACT WITH BEARING PLATE, THE CONTRACTOR MAY, AT HIS OPTION, SUBSTITUTE FOR THE COVER PLATES DESIGNATED ON THE PLANS COVER PLATES OF THE EQUIVALENT AREA PROVIDED THESE PLATES ARE AT LEAST 5/16" IN THICKNESS AND DO NOT EXCEED A WIDTH EQUAL TO THE FLANGE WIDTH LESS 2" OR A THICKNESS EQUAL TO 2 TIMES THE FLANGE THICKNESS. THE SIZE OF FILLET WELDS SHALL CONFORM TO THE REQUIREMENTS OF THE CURRENT ANSI/AASHTO/AWS "BRIDGE WELDING CODE". ELECTROSLAG WELDING WILL NOT BE PERMITTED.

WITH THE SOLE EXCEPTION OF EDGES AT SURFACES WHICH BEAR ON OTHER SURFACES, ALL SHARP EDGES AND ENDS OF SHAPES AND PLATES SHALL BE SLIGHTLY ROUNDED BY SUITABLE MEANS TO A RADIUS OF APPROXIMATELY 1/16 INCH OR EQUIVALENT FLAT SURFACE AT A SUITABLE ANGLE PRIOR TO PAINTING, GALVANIZING, OR METALLIZING.

HANDRAILS AND POSTS:

METAL STANDARDS AND FACES OF THE CONCRETE END POSTS FOR THE METAL RAIL SHALL BE SET NORMAL TO THE GRADE OF THE CURB, UNLESS OTHERWISE SHOWN ON PLANS. THE METAL RAIL AND TOPS OF CONCRETE POSTS USED WITH THE ALUMINUM RAIL SHALL BE BUILT PARALLEL TO THE GRADE OF THE CURB.

METAL HANDRAILS SHALL BE IN ACCORDANCE WITH THE PLANS. RAILS SHALL BE AS MANUFACTURED FOR BRIDGE RAILING. CASTINGS SHALL BE OF A UNIFORM APPEARANCE. FINS AND OTHER DEFORMATIONS RESULTING FROM CASTING OR OTHERWISE SHALL BE REMOVED IN A MANNER SO THAT A UNIFORM COLORING OF THE COMPLETED CASTING SHALL BE OBTAINED. CASTINGS WITH DISCOLORATIONS OR OF NON-UNIFORM COLORING WILL NOT BE ACCEPTED. CERTIFIED MILL REPORTS ARE REQUIRED FOR METAL RAILS AND POSTS.

SPECIAL NOTES:

GENERALLY, IN CASE OF DISCREPANCY, THIS STANDARD SHEET OF NOTES SHALL GOVERN OVER THE SPECIFICATIONS, BUT THE REMAINDER OF THE PLANS SHALL GOVERN OVER NOTES HEREON, AND SPECIAL PROVISIONS SHALL GOVERN OVER ALL. SEE SPECIFICATIONS ARTICLE 105-4.

ENGLISH

JANUARY, 1990

8/14/2013 10:56:41 AM G:\Projects\2012\17BP.8.R.41 (Lee 50)\Structures\Drawings\Final\lee50_sd_sn.dgn