06/28/12

PROJECT: 17BP.8.R.13

CONTRACT:

See Sheet 1-A For Index of Sheets
See Sheet 1-B For Conventional symbols
See Sheet 1-C For Survey Control Sheet

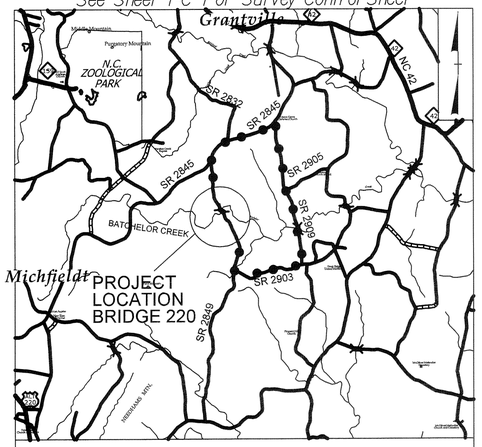

VICINITY MAP

OFF-SITE DETOUR ROUTE

STATE OF NORTH CAROLINA
DIVISION OF HIGHWAYS

RANDOLPH COUNTY

STATE	STATE PROJECT REFERENCE NO.	SHEET NO.	TOTAL SHEETS
N.C.	17BP.8.R.13	1	

STATE PROJ. NO.	F. A. PROJ. NO.	DESCRIPTION
17BP.8.R.13		PE
17BP.8.R.13		R/W & UTIL.
17BP.8.R.13		CONST.

LOCATION: BRIDGE NO. 220 OVER BACHELOR CREEK ON SR 2849 (BACHELOR CREEK RD)

TYPE OF WORK: GRADING, DRAINAGE, PAVING, STRUCTURE

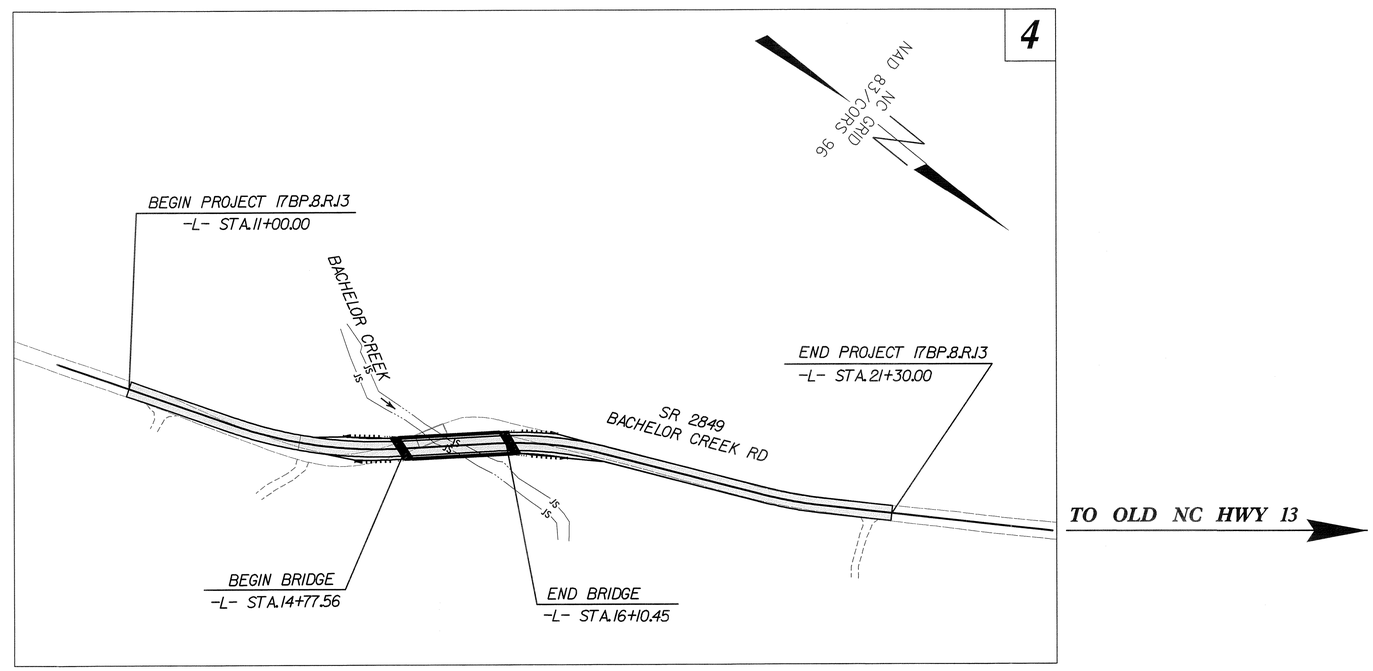

GRAPHIC SCALES

50 25 0 50 100
PLANS

50 25 0 50 100
PROFILE (HORIZONTAL)

10 5 0 10 20
PROFILE (VERTICAL)

DESIGN DATA

ADT 2013 = 160
ADT 2033 = 230
D = 50 %
T = 8 % *
V = 60 MPH

FUNC CLASS = RURAL LOCAL
* TTST 3% DUAL 5%

PROJECT LENGTH

LENGTH OF ROADWAY PROJECT 17BP.8.R.13 = 0.170 MI
LENGTH OF STRUCTURE PROJECT 17BP.8.R.13 = 0.025 MI
TOTAL LENGTH OF PROJECT 17BP.8.R.13 = 0.195 MI

Prepared In the Office of:
SEPI ENGINEERING & CONSTRUCTION
1025 Wade Avenue
Raleigh, NC 27605
Tel:919-789-9977
Fax:919-789-9591
License: C-2197

FOR THE NORTH CAROLINA DEPT. OF TRANSPORATION

2012 STANDARD SPECIFICATIONS

RIGHT OF WAY DATE:

LETTING DATE:
NOVEMBER 12, 2013

DAVID CLODGO, PE
PROJECT ENGINEER

AGNIESZKA NAU, PE
ROADWAY PROJECT DESIGN ENGINEER

TIM WELCH, PE
NCDOT CONTACT

HYDRAULICS ENGINEER
NORTH CAROLINA PROFESSIONAL SEAL 12786 ENGINEER STEVEN M. BONDUR
10-7-13
P.E.
SIGNATURE:

ROADWAY DESIGN ENGINEER
NORTH CAROLINA PROFESSIONAL SEAL 029712 ENGINEER AGNIESZKA J. NAU
10-07-13
P.E.
SIGNATURE:

STATE OF NORTH CAROLINA DEPARTMENT OF TRANSPORTATION

$$$$$SYSTIME$$$$$
$$$$$DGN$$$$$
$$$$$USERNAME$$$$$

SEPI ENGINEERING & CONSTRUCTION
1025 Wade Avenue
Raleigh, NC 27605
Tel:919-789-9977
Fax:919-789-9591
License: C-2197

PROJECT REFERENCE NO.	SHEET NO.
17BP.8.R.13	1-A

STATE OF NORTH CAROLINA
DIVISION OF HIGHWAYS

INDEX OF SHEETS, GENERAL NOTES, AND LIST OF STANDARDS

INDEX OF SHEETS

SHEET NUMBER	SHEET
1	TITLE SHEET
1-A	INDEX OF SHEETS, GENERAL NOTES, AND LIST OF STANDARD DRAWINGS
1-B	CONVENTIONAL SYMBOLS
1-C	SURVEY CONTROL
2	PAVEMENT SCHEDULE, TYPICAL SECTIONS, AND WEDGING DETAILS
3	SUMMARY OF QUANTITIES
3A	DRAINAGE SUMMARY
3B	EARTHWORK SUMMARY, GUARDRAIL SUMMARY, PAVEMENT REMOVAL SUMMARY
4	PLAN SHEET
5	PROFILE SHEET
TMP-1 THRU TMP-3	TRAFFIC MANAGEMENT PLANS
SP-1	OFF- SITE DETOUR SIGN DESIGN
EC-1 THRU EC-4	EROSION CONTROL PLANS
X-1 THRU X-5	CROSS-SECTIONS
S-1 THRU S-24	STRUCTURE PLANS

GENERAL NOTES:

2012 SPECIFICATIONS
EFFECTIVE: 01-17-12
REVISED: 07/30/12

GRADE LINE:
GRADING AND SURFACING:

THE GRADE LINES SHOWN DENOTE THE FINISHED ELEVATION OF THE PROPOSED SURFACING AT GRADE POINTS SHOWN ON THE TYPICAL SECTIONS. GRADE LINES MAY BE ADJUSTED AT THEIR BEGINNING AND ENDING AND AT STRUCTURES AS DIRECTED BY THE ENGINEER IN ORDER TO SECURE A PROPER TIE-IN.

CLEARING:

CLEARING ON THIS PROJECT SHALL BE PERFORMED TO THE LIMITS ESTABLISHED BY METHOD III.

SHOULDER CONSTRUCTION:

ASPHALT, EARTH, AND CONCRETE SHOULDER CONSTRUCTION ON THE HIGH SIDE OF SUPERELEVATED CURVES SHALL BE IN ACCORDANCE WITH STD. NO. 560.01.

GUARDRAIL:

THE GUARDRAIL LOCATIONS SHOWN ON THE PLANS MAY BE ADJUSTED DURING CONSTRUCTION AS DIRECTED BY THE ENGINEER. THE CONTRACTOR SHOULD CONSULT WITH THE ENGINEER PRIOR TO ORDERING GUARDRAIL MATERIAL.

END BENTS:

THE ENGINEER SHALL CHECK THE STRUCTURE END BENT PLANS, DETAILS, AND CROSS-SECTION PRIOR TO SETTING OF THE SLOPE STAKES FOR THE EMBANKMENT OR EXCAVATION APPROACHING A BRIDGE.

ANY RELOCATION OF EXISTING UTILITIES WILL BE ACCOMPLISHED BY OTHERS.

RIGHT-OF-WAY MARKERS:

ALL RIGHT-OF-WAY MARKERS ON THIS PROJECT SHALL BE PLACED BY CONTRACT.

2012 ROADWAY ENGLISH STANDARD DRAWINGS

The following Roadway Standards as appear in "Roadway Standard Drawings" Highway Design Branch - N. C. Department of Transportation - Raleigh, N. C., Dated January, 2012 are applicable to this project and by reference hereby are considered a part of these plans:

STD.NO.	TITLE
DIVISION 2 - EARTHWORK	
200.03	Method of Clearing - Method III
225.02	Guide for Grading Subgrade - Secondary and Local
DIVISION 3 - PIPE CULVERTS	
300.01	Method of Pipe Installation
DIVISION 4 - MAJOR STRUCTURES	
422.11	Reinforced Bridge Approach Fills - Sub Regional Tier
DIVISION 6 - ASPHALT BASES AND PAVEMENTS	
654.01	Pavement Repairs
DIVISION 8 - INCIDENTALS	
806.01	Concrete Right-of-Way Marker
840.20	Frames and Wide Slot Flat Grates
840.27	Brick Grated Drop Inlet Type 'B' - 12" thru 36" Pipe
840.46	Traffic Bearing Precast Drainage Structure
840.66	Drainage Structure Steps
846.04	Drop Inlet Installation in Shoulder Berm Gutter
862.01	Guardrail Placement
862.02	Guardrail Installation
862.03	Structure Anchor Units
876.01	Rip Rap in Channels
876.02	Guide for Rip Rap at Pipe Outlets
876.04	Drainage Ditches with Class 'B' Rip Rap

8/17/99
8:34:40 AM
$$$$$$$$$$$$$$$$$DGN$$$$$$$$$$$$$$$$$$$$
jared.medlin

04/16/11

PROJECT REFERENCE NO.	SHEET NO.
17.BP.8.R.13	1B

Note: Not to Scale

****S.U.E. = Subsurface Utility Engineering***

STATE OF NORTH CAROLINA
DIVISION OF HIGHWAYS

CONVENTIONAL PLAN SHEET SYMBOLS

BOUNDARIES AND PROPERTY:

- State Line
- County Line
- Township Line
- City Line
- Reservation Line
- Property Line
- Existing Iron Pin — EIP
- Property Corner
- Property Monument — ECM
- Parcel/Sequence Number — 123
- Existing Fence Line
- Proposed Woven Wire Fence
- Proposed Chain Link Fence
- Proposed Barbed Wire Fence
- Existing Wetland Boundary — WLB
- Proposed Wetland Boundary — WLB
- Existing Endangered Animal Boundary — EAB
- Existing Endangered Plant Boundary — EPB
- Known Soil Contamination: Area or Site
- Potential Soil Contamination: Area or Site

BUILDINGS AND OTHER CULTURE:

- Gas Pump Vent or U/G Tank Cap
- Sign — S
- Well — W
- Small Mine
- Foundation
- Area Outline
- Cemetery
- Building
- School
- Church
- Dam

HYDROLOGY:

- Stream or Body of Water
- Hydro, Pool or Reservoir
- Jurisdictional Stream — JS
- Buffer Zone 1 — BZ 1
- Buffer Zone 2 — BZ 2
- Flow Arrow
- Disappearing Stream
- Spring
- Wetland
- Proposed Lateral, Tail, Head Ditch — FLOW
- False Sump

RAILROADS:

- Standard Gauge — CSX TRANSPORTATION
- RR Signal Milepost — MILEPOST 35
- Switch — SWITCH
- RR Abandoned
- RR Dismantled

RIGHT OF WAY:

- Baseline Control Point
- Existing Right of Way Marker
- Existing Right of Way Line
- Proposed Right of Way Line — RW
- Proposed Right of Way Line with Iron Pin and Cap Marker — RW
- Proposed Right of Way Line with Concrete or Granite R/W Marker — RW
- Proposed Control of Access Line with Concrete C/A Marker — CA
- Existing Control of Access — CA
- Proposed Control of Access — CA
- Existing Easement Line — E
- Proposed Temporary Construction Easement — E
- Proposed Temporary Drainage Easement — TDE
- Proposed Permanent Drainage Easement — PDE
- Proposed Permanent Drainage / Utility Easement — DUE
- Proposed Permanent Utility Easement — PUE
- Proposed Temporary Utility Easement — TUE
- Proposed Aerial Utility Easement — AUE
- Proposed Permanent Easement with Iron Pin and Cap Marker

ROADS AND RELATED FEATURES:

- Existing Edge of Pavement
- Existing Curb
- Proposed Slope Stakes Cut — C
- Proposed Slope Stakes Fill — F
- Proposed Curb Ramp — CR
- Existing Metal Guardrail
- Proposed Guardrail
- Existing Cable Guiderail
- Proposed Cable Guiderail
- Equality Symbol
- Pavement Removal

VEGETATION:

- Single Tree
- Single Shrub
- Hedge
- Woods Line

- Orchard
- Vineyard — Vineyard

EXISTING STRUCTURES:

MAJOR:

- Bridge, Tunnel or Box Culvert — CONC
- Bridge Wing Wall, Head Wall and End Wall — CONC WW

MINOR:

- Head and End Wall — CONC HW
- Pipe Culvert
- Footbridge
- Drainage Box: Catch Basin, DI or JB — CB
- Paved Ditch Gutter
- Storm Sewer Manhole — S
- Storm Sewer — S

UTILITIES:

POWER:

- Existing Power Pole
- Proposed Power Pole
- Existing Joint Use Pole
- Proposed Joint Use Pole
- Power Manhole — P
- Power Line Tower
- Power Transformer
- U/G Power Cable Hand Hole
- H-Frame Pole
- Recorded U/G Power Line — P
- Designated U/G Power Line (S.U.E.*) — P

TELEPHONE:

- Existing Telephone Pole
- Proposed Telephone Pole
- Telephone Manhole — T
- Telephone Booth
- Telephone Pedestal — T
- Telephone Cell Tower
- U/G Telephone Cable Hand Hole — HH
- Recorded U/G Telephone Cable — T
- Designated U/G Telephone Cable (S.U.E.*) — T
- Recorded U/G Telephone Conduit — TC
- Designated U/G Telephone Conduit (S.U.E.*) — TC
- Recorded U/G Fiber Optics Cable — T FO
- Designated U/G Fiber Optics Cable (S.U.E.*) — T FO

WATER:

- Water Manhole — W
- Water Meter
- Water Valve
- Water Hydrant
- Recorded U/G Water Line — W
- Designated U/G Water Line (S.U.E.*) — W
- Above Ground Water Line — A/G Water

TV:

- TV Satellite Dish
- TV Pedestal — C
- TV Tower
- U/G TV Cable Hand Hole — HH
- Recorded U/G TV Cable — TV
- Designated U/G TV Cable (S.U.E.*) — TV
- Recorded U/G Fiber Optic Cable — TV FO
- Designated U/G Fiber Optic Cable (S.U.E.*) — TV FO

GAS:

- Gas Valve
- Gas Meter
- Recorded U/G Gas Line — G
- Designated U/G Gas Line (S.U.E.*) — G
- Above Ground Gas Line — A/G Gas

SANITARY SEWER:

- Sanitary Sewer Manhole
- Sanitary Sewer Cleanout
- U/G Sanitary Sewer Line — SS
- Above Ground Sanitary Sewer — A/G Sanitary Sewer
- Recorded SS Forced Main Line — FSS
- Designated SS Forced Main Line (S.U.E.*) — FSS

MISCELLANEOUS:

- Utility Pole
- Utility Pole with Base
- Utility Located Object
- Utility Traffic Signal Box — S
- Utility Unknown U/G Line — ?UTL
- U/G Tank; Water, Gas, Oil
- Underground Storage Tank, Approx. Loc. — UST
- A/G Tank; Water, Gas, Oil
- Geoenvironmental Boring
- U/G Test Hole (S.U.E.*)
- Abandoned According to Utility Records — AATUR
- End of Information — E.O.I.

SURVEY CONTROL SHEET

PROJECT REFERENCE NO.	SHEET NO.
17BP.8.R.13	1-C
R/W SHEET NO.	
ROADWAY DESIGN ENGINEER	HYDRAULICS ENGINEER

SEPI ENGINEERING & CONSTRUCTION
1025 Wade Avenue
Raleigh, NC 27605
Tel:919-789-9977
Fax:919-789-9591
License: C-2197

-L- ALIGNMENT					
BL Point	North	East	Elevation	Station	Offset
BL-1	674,493.97'	1,784,088.32'	549.69'	11+22.74	15.96
BL-2	674,753.65'	1,783,991.94'	537.44'	13+53.39	40.92
BL-3	674,856.19'	1,783,848.94'	534.28'	15+60.68	-9.65
BL-4	675,034.11'	1,783,752.09'	532.92'	17+63.79	9.72

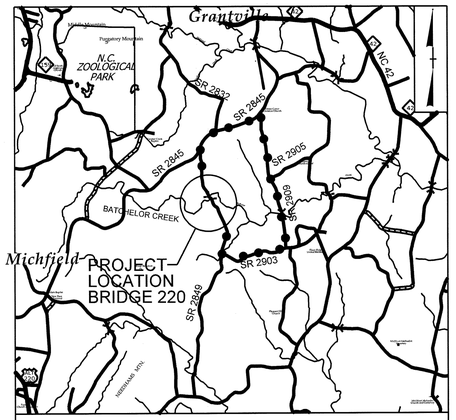

VICINITY MAP

OFF-SITE DETOUR ROUTE

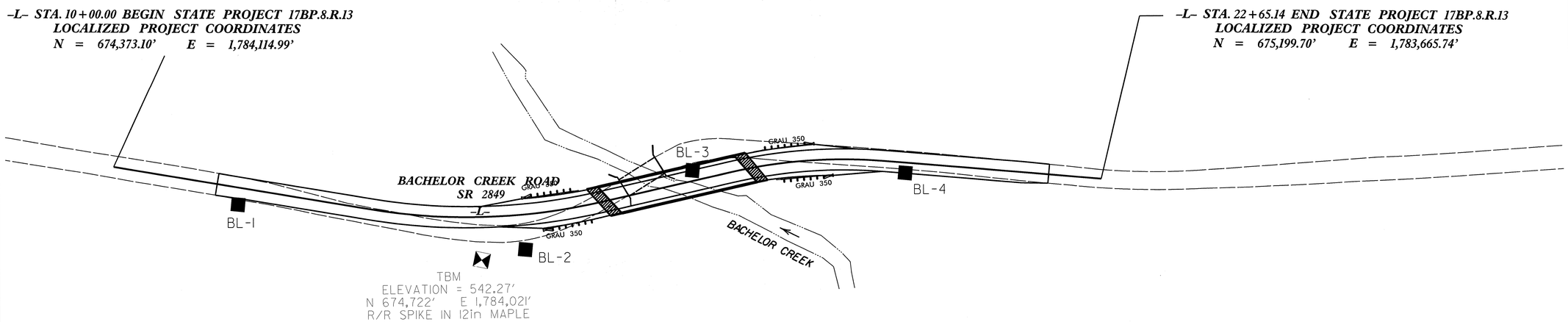

DATUM DESCRIPTION

THE LOCALIZED COORDINATE SYSTEM DEVELOPED FOR THIS PROJECT IS BASED ON THE STATE PLANE COORDINATES ESTABLISHED BY SEPI ENGINEERING AND CONSTRUCTION ON CONTROL POINT"BL-1" WITH NAD 83/CORS 96 STATE PLANE GRID COORDINATES OF

NORTHING: 674,493.97(ft) EASTING: 1,784,088.32(ft)

ELEVATION: 549.69(ft)

THE AVERAGE COMBINED GRID FACTOR USED ON THIS PROJECT (GROUND TO GRID) IS: 0.999869660

THE N.C. LAMBERT GRID BEARING AND LOCALIZED HORIZONTAL GROUND DISTANCE FROM "BL-1" TO -L- STATION 11+22.74 IS S 70° 07' 12.59" W Dist 15.96'

ALL LINEAR DIMENSIONS ARE LOCALIZED HORIZONTAL DISTANCES

VERTICAL DATUM USED IS NAVD 88

NOTES:

1. *THE CONTROL DATA FOR THIS PROJECT WAS PROVIDED BY SEPI ENGINEERING AND CONSTRUCTION, INC. CONTROL POINTS PROVIDED ARE AS FOLLOWS:*

● *INDICATES GEODETIC CONTROL MONUMENTS USED OR SET FOR HORIZONTAL PROJECT CONTROL BY THE SEPI ENGINEERING AND CONSTRUCTION, INC.*

◆ *INDICATES CONTROL MONUMENTS USED OR SET FOR HORIZONTAL PROJECT CONTROL BY SEPI ENGINEERING AND CONSTRUCTION, INC.*

NOTE: DRAWING NOT TO SCALE

6/2/99

PROJECT REFERENCE NO.	SHEET NO.
17BP.8.R.13	2

SEPI ENGINEERING & CONSTRUCTION
1025 Wade Avenue
Raleigh, NC 27605
Tel:919-789-9977
Fax:919-789-9591
License: C-2197

* ADD 3′ TO SHOULDERS FOR GUARDRAIL
PAVE SHOULDER TO FACE OF GUARDRAIL

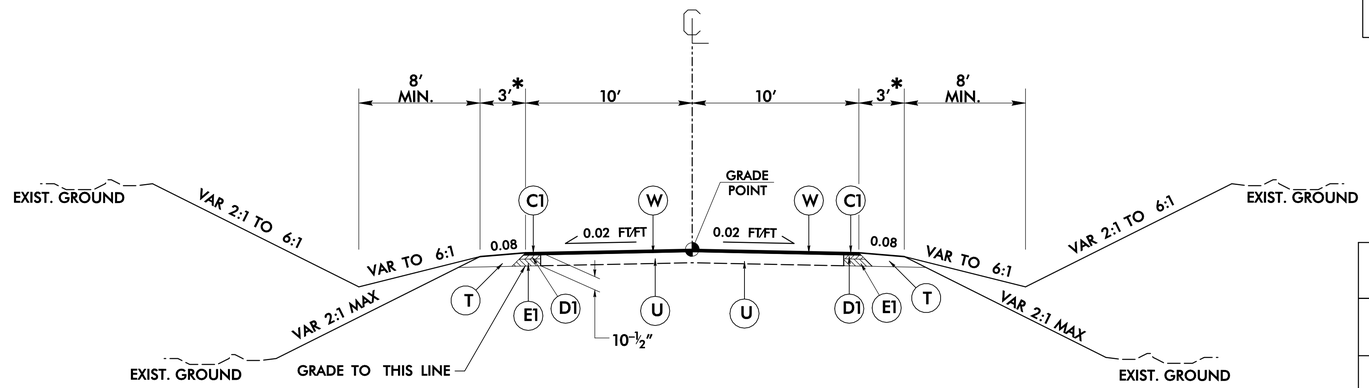

TYPICAL SECTION NO. 1

–L– STA. 11+00.00 TO –L– STA. 13+50.00
–L– STA. 17+00.00 TO –L– STA. 18+75.00
–L– STA. 19+25.00 TO –L– STA. 21+30.00

* ADD 3′ TO SHOULDERS FOR GUARDRAIL
PAVE SHOULDER TO FACE OF GUARDRAIL

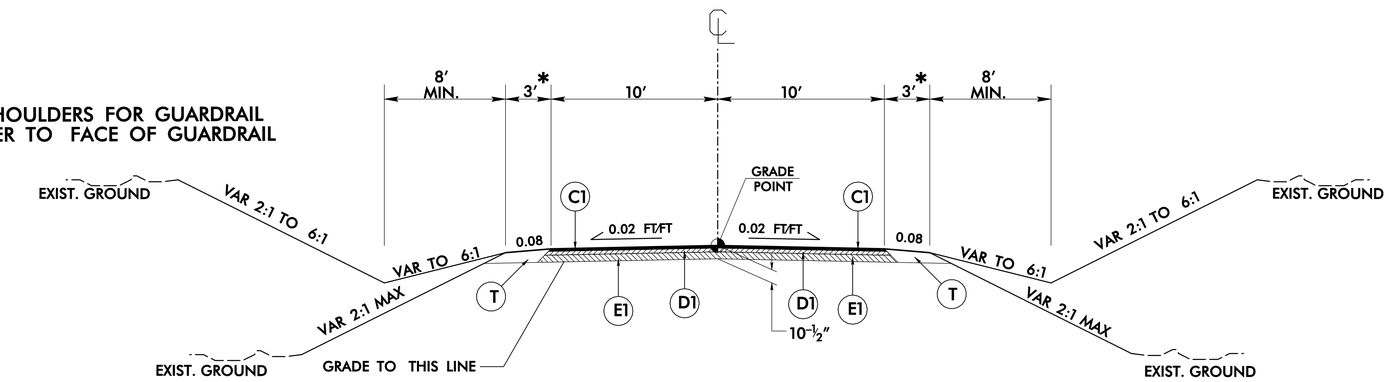

TYPICAL SECTION NO. 2

–L– STA. 13+50.00 TO –L– STA. 14+77.56 (BEGIN BRIDGE)
–L– STA. 16+10.45 (END BRIDGE) TO –L– STA. 17+00.00
–L– STA. 18+75.00 TO –L– STA. 19+25.00

PAVEMENT SCHEDULE

C1	PROP. APPROX. 2″ ASPHALT CONCRETE SURFACE COURSE, TYPE SF9.5A, AT AN AVERAGE RATE OF 110 LBS. PER SQ. YD. IN EACH OF TWO LAYERS.
C2	PROP. VAR. DEPTH ASPHALT CONCRETE SURFACE COURSE, TYPE SF9.5A, AT AN AVERAGE RATE OF 110 LBS. PER SQ. YD. PER 1″ DEPTH. TO BE PLACED IN LAYERS NOT TO EXCEED 1½″ IN DEPTH.
D1	PROP. APPROX. 3″ ASPHALT CONCRETE INTERMEDIATE COURSE, TYPE I19.0B, AT AN AVERAGE RATE OF 342 LBS. PER SQ. YD.
D2	PROP. VAR. DEPTH ASPHALT CONCRETE INTERMEDIATE COURSE, TYPE I19.0B, AT AN AVERAGE RATE OF 114 LBS. PER SQ. YD. PER 1″ DEPTH, TO BE PLACED IN LAYERS NOT LESS THAN 2½″ OR GREATER THAN 4″ IN DEPTH.
E1	PROP. APPROX. 5.5″ ASPHALT CONCRETE BASE COURSE, TYPE B25.0B, AT AN AVERAGE RATE OF 627 LBS. PER SQ. YD.
T	EARTH MATERIAL.
U	EXISTING PAVEMENT.
W	WEDGING (SEE DETAIL)
V	MILLING (SEE DETAIL)

NOTE: PAVEMENT EDGE SLOPES ARE 1:1 UNLESS SHOWN OTHERWISE

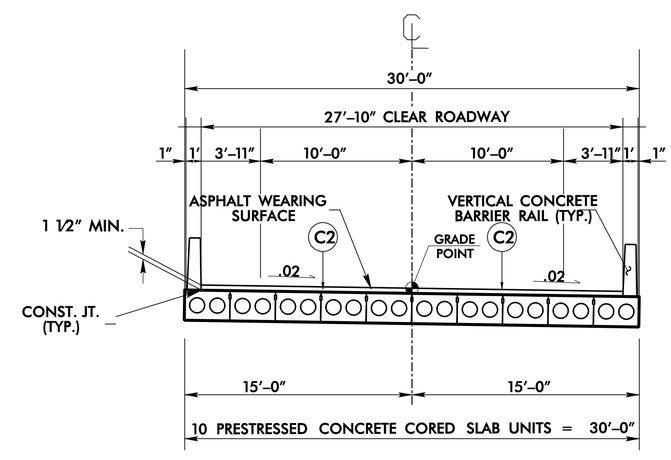

TYPICAL SECTION NO. 3

–L– STA. 14+77.56 (BEGIN BRIDGE)
TO –L– STA. 16+10.45 (END BRIDGE)

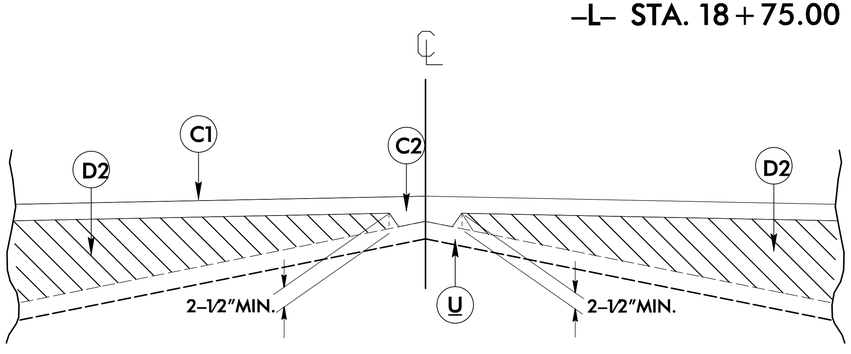

Detail Showing Method of Wedging

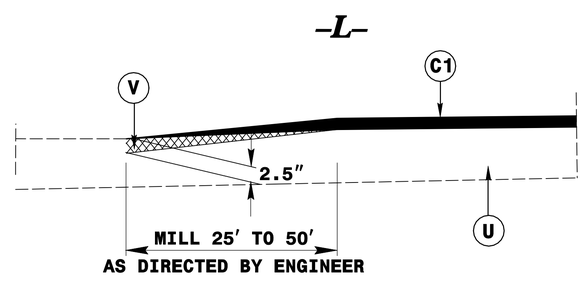

MILLING DETAIL

–L– 11+00.00, –L– 21+30.00

ITEM NUMBER	SECTION NUMBER	DESCRIPTION	QUANTITY	UNIT
0000100000–N	800	MOBILIZATION	1	LS
0030000000–N	SP	BRIDGE APPROACH FILL–SUB REGIONAL TIER, STATION –L– STA. 15+44.00	1	LS
0043000000–N	226	GRADING	1	LS
0050000000–E	226	SUPPLEMENTARY CLEARING & GRUBBING	1	ACR
0196000000–E	270	GEOTEXTILE FOR SOIL STABILIZATION	150	SY
0318000000–E	300	FOUNDATION CONDITIONING MATERIAL, MINOR STRUCTURES	3	TON
0366000000–E	310	15″ RC PIPE CULVERTS, CLASS III	32	LF
0372000000–E	310	18″ RC PIPE CULVERTS, CLASS III	30	LF
1220000000–E	545	INCIDENTAL STONE	100	TON
1330000000–E	607	INCIDENTAL MILLING	230	SY
1489000000–E	610	ASPHALT CONC BASE COURSE, TYPE B25.0B	440	TON
1498000000–E	610	ASPHALT CONC INTERMEDIATE COURSE, TYPE I19.0B	240	TON
1525000000–E	610	ASPHALT CONC SURFACE COURSE, TYPE SF9.5A	490	TON
1575000000–E	620	ASPHALT BINDER FOR PLANT MIX	65	TON
2286000000–N	840	MASONARY DRAINAGE STRUCTURE	2	EA
2367000000–N	840	FRAME WITH TWO NARROW SLOT FLAT GRATES, 840.29	2	EA
2556000000–E	846	SHOULDER BERM GUTTER	22	LF
3030000000–E	862	STEEL BEAM GUARDRAIL	25	LF
3150000000–N	862	ADDITIONAL GUARDRAIL POSTS	5	EA
3215000000–N	862	GUARDRAIL ANCHOR UNITS, TYPE III	4	EA
3270000000–N	SP	GUARDRAIL ANCHOR UNITS, TYPE 350	4	EA
3649000000–E	876	RIP RAP, CLASS B	172	TON
3656000000–E	876	GEOTEXTILE FOR DRAINAGE	1,250	SY
4399000000–E	SP	TRAFFIC CONTROL	1	LS
4810000000–E	1205	PAINT PAVEMENT MARKING LINES (4″)	3,200.0	LF
6000000000–E	1605	TEMPORARY SILT FENCE	3440	LF
6006000000–E	1610	EROSION CONTROL STONE, CLASS A	80	TON
6009000000–E	1610	EROSION CONTROL STONE, CLASS B	60	TON
6012000000–E	1610	SEDIMENT CONTROL STONE	580	TON
6015000000–E	1615	TEMPORARY MULCHING	0.5	ACR
6018000000–E	1620	SEED FOR TEMPORARY SEEDING	50	LB
6021000000–E	1620	FERTILIZER FOR TEMPORARY SEEDING	0.25	TON
6024000000–E	1622	TEMPORARY SLOPE DRAINS	200	LF
6029000000–E	SP	SAFETY FENCE	1000	LF
6030000000–E	1630	SILT EXCAVATION	90	CY
6036000000–E	1631	MATTING FOR EROSION CONTROL	925	SY
6037000000–E	SP	COIR FIBER MAT	375	SY
6038000000–E	SP	PERMANENT SOIL REINFORCEMENT MAT	225	SY
6042000000–E	1632	1/4″ HARDWARE CLOTH	1690	LF
6070000000–N	1639	SPECIAL STILLING BASINS	12	EA
6071010000–E	SP	WATTLE	1250	LF
6071020000–E	SP	POLYACRYLAMIDE (PAM)	190	LB

ITEM NUMBER	SECTION NUMBER	DESCRIPTION	QUANTITY	UNIT
6084000000–E	1660	SEEDING AND MULCHING	0.5	ACR
6087000000–E	1660	MOWING	0.5	ACR
6090000000–E	1661	SEED FOR REPAIR SEEDING	50	LB
6093000000–E	1661	FERTILIZER FOR REPAIR SEEDING	0.25	TON
6096000000–E	1662	SEED FOR SUPPLEMENTAL SEEDING	50	LB
6108000000–E	1665	FERTILIZER TOP DRESSING	0.50	TON
6114500000–N	1667	SPECIALIZED HAND MOWING	10	MHR
6117000000–N	1675	RESPONSE FOR EROSION CONTROL	13	EA
8035000000–N	402	REMOVAL OF EXISTING STRUCTURE AT STATION 15+44.00 –L–	1	LS
8096000000–E	450	PILE EXCAVATION IN SOIL	55	LF
8097000000–E	450	PILE EXCAVATION NOT IN SOIL	45	LF
8105520000–E	411	3′–0″ DIA DRILLED PIERS IN SOIL	11.4	LF
8105620000–E	411	3′–0″ DIA DRILLED PIERS NOT IN SOIL	45.8	LF
8113000000–N	411	SID INSPECTIONS	1	EA
8115000000–N	411	CSL TESTING	1	EA
8121000000–N	412	UNCLASSIFIED STRUCTURE EXCAVATION AT STATION 15+44.00 –L–	1	LS
8182000000–E	420	CLASS A CONCRETE (BRIDGE)	79.50	CY
8210000000–N	422	BRIDGE APPROACH SLABS, STATION 15+44.00 –L–	1	LS
8217000000–E	425	REINFORCING STEEL (BRIDGE)	17,214	LB
8238000000–E	425	SPIRAL COLUMN REINFORCING STEEL (BRIDGE)	1,199	LB
8364000000–E	450	HP12X53 STEEL PILES	100	LF
8505000000–E	460	VERTICAL CONCRETE BARRIER RAIL	260.58	LF
8608000000–E	876	RIP RAP CLASS II (2′–0″ THICK)	175	TON
8622000000–E	876	GEOTEXTILE FOR DRAINAGE	194	SY
8657000000–N	430	ELASTOMERIC BEARINGS	1	LS
8753100000–E	430	3′–0″ X 2′–9″ PRESTRESSED CONC BOX BEAMS	800	LF
8762000000–E	430	3′–0″ X 1′–9″ PRESTRESSED CONC CORED SLABS	500	LF

6/21/00
10:18:27 AM
$$$$$$$$$$$$$$$$DGN$$$$$$$$$$$$$$$$$$$$
jared.medlin

4/04/06

COMPUTED BY: _____ DATE: _____
CHECKED BY: _____ DATE: _____

SEPI ENGINEERING & CONSTRUCTION
1025 Wade Avenue
Raleigh, NC 27605
Tel:919-789-9977
Fax:919-789-9591
License: C-2197

PROJECT REFERENCE NO.	SHEET NO.
17BP.8.R.13	3-A
R/W SHEET NO.	

STATE OF NORTH CAROLINA
DIVISION OF HIGHWAYS

SUB-REGIONAL & REGIONAL
LIST OF PIPES, ENDWALLS, ETC. (FOR PIPES 48" & UNDER)

STATION	LOCATION (LT,RT, OR CL)	STRUCTURE NO. FROM	STRUCTURE NO. TO	TOP ELEVATION	INVERT ELEVATION	INVERT ELEVATION	SLOPE CRITICAL	DRAINAGE PIPE (RCP, CSP, CAAP, HDPE, or PVC) SIZE 12"	15"	18"	24"	30"	36"	42"	48"	DO NOT USE RCP	DO NOT USE CSP	DO NOT USE CAAP	DO NOT USE HDPE
								THICKNESS OR GAUGE											
L 14+64	RT	401	OUT	537.04	535.12	535.00													
L 16+42	RT	402	OUT	534.36	532.44	532.00													
L 21+00	RT	403	OUT																

STATION	C.S. PIPE 12"	15"	18"	24"	36"	42"	48"	R.C. PIPE (CLASS III) 15"	18"	24"	30"	36"	42"	48"	R.C. PIPE (CLASS IV) 12"	15"	18"	24"	30"	36"	42"	48"
THICKNESS OR GAUGE	.064	.064	.064	.064	.079	.109	.109															
L 14+64								16														
L 16+42								16														
L 21+00									30													
								32	30													

STATION	*** R. C. PIPE (CLASS V)	*** R. C. PIPE CULVERTS, CONTRACTOR DESIGN PIPE	*** R. C. PIPE CULVERTS, CONTRACTOR DESIGN PIPE	15" SIDE DRAIN PIPE	18" SIDE DRAIN PIPE	ENDWALLS STD. 838.01, STD. 838.11 OR STD. 838.80 (UNLESS NOTED OTHERWISE) CU. YDS. R.C.P.	C.S.P.	QUANTITIES FOR DRAINAGE STRUCTURES PER EACH (0' THRU 5.0')	* TOTAL L.F. FOR PAY QUANTITY SHALL BE COL. 'A' + (1.3 X COL.'B') LIN. *FT. A: 5.0' THRU 10.0'	B: 10.0' AND ABOVE	C.B. STD. 840.01 OR STD. 840.02	FRAME, GRATES AND HOOD STANDARD 840.03 TYPE OF GRATE E	F	G	CONCRETE TRANSITIONAL SECTION CATCH BASIN	DROP INLET	G.D.I. (N.S.) FRAME WITH TWO GRATES STD. 840.29	G.D.I. TYPE "D" STD. 840.19 OR 840.28	G.D.I. FRAME WITH TWO GRATES STD. 840.22	G.D.I. (N.S.) FRAME WITH GRATE STD. 840.24	G.D.I. (N.S.) FRAME WITH TWO GRATES STD. 840.24	J.B. STD. 840.31 OR 840.32	CORR. STEEL ELBOWS NO. & SIZE	CONC. COLLARS CL. "B" C.Y. STD 840.72	CONC. & BRICK PIPE PLUG, C.Y. STD. 840.71	PIPE REMOVAL LIN.FT.	REMARKS
L 14+64								1												1	1											TBDI (NS)
L 16+42								1												1	1											TBDI (NS)
L 21+00																																	
								2												2	2											

ABBREVIATIONS

C.B.	CATCH BASIN
N.D.I.	NARROW DROP INLET
D.I.	DROP INLET
G.D.I.	GRATED DROP INLET
G.D.I. (N.S.)	GRATED DROP INLET (NARROW SLOT)
J.B.	JUNCTION BOX
M.H.	MANHOLE
T.B.D.I.	TRAFFIC BEARING DROP INLET
T.B.J.B.	TRAFFIC BEARING JUNCTION BOX

COMPUTED BY: CTR DATE: 8/20/2012
CHECKED BY: _____ DATE: _____

PROJECT NO.	SHEET NO.
17BP.8.R.13	3B

W70

STATE OF NORTH CAROLINA
DIVISION OF HIGHWAYS

SEPI ENGINEERING & CONSTRUCTION

SUMMARY OF EARTHWORK

Station	Station	Uncl. Excav.	Embank. +%	Borrow	Waste
-L-					
11+00	14+77.56	97	62		35
	(BEGIN BRIDGE)				
16+10.45	19+00	208	277	69	
(END BRIDGE)					
SUBTOTALS:		305	340	69	35
SUBTOTALS:					
PROJECT TOTALS:					
Waste in Lieu of Borrow				-35	
PROJECT TOTALS:		305	340	34	35
EST. 5% TO REPLACE TOP SOIL ON BORROW PIT				2	
GRAND TOTALS:		305	339	36	
SAY:		**310**			

Note: Earthwork quantities are calculated by the Roadway Design Unit. These earthwork quantities are based in part on subsurface data provided by the Geotechnical Engineering Unit.

SUMMARY OF EXISTING ASPHALT PAVEMENT REMOVAL

LINE	Station	Station	LOC LT/RT/CL	YD^2
-L-	12+30	14+93	RT	476
-L-	15+28	17+00	LT	344
			TOTAL:	820
			SAY:	830

"N" = DISTANCE FROM EDGE OF LANE TO FACE OF GUARDRAIL
TOTAL SHOULDER WIDTH = DISTANCE FROM EDGE OF TRAVEL LANE TO SHOULDER BREAK POINT.
FLARE LENGTH = DISTANCE FROM LAST SECTION OF PARALLEL GUARDRAIL TO END OF GUARDRAIL.
W = TOTAL WIDTH OF FLARE FROM BEGINNING OF TAPER TO END OF GUARDRAIL.
G = GATING IMPACT ATTENUATOR TYPE 350
NG = NON-GATING IMPACT ATTENUATOR TYPE 350

GUARDRAIL SUMMARY

LINE	BEG. STA.	END STA.	LOC.	LENGTH			WARRANT POINT		"N" DIST FROM E.O.L.	TOTAL SHLDR WIDTH	FLAIR LENGTH		W		ANCHORS							IMP. ATTEN. TYPE 350			REMOVE EXISTING GRDRAIL		REMARKS
				STRAIGHT	SHOP CURVED	DOUBLE FACED	APPR. END	TRAIL. END			APPR. END	TRAIL. END	APPR. END	TRAIL. END	XI MOD	XI	GRAU 350	M-350	TYPE III	CAT-1	VI MOD	EA	G	NG			
-L-	13+95.03	14+70.03	LT	75.00				14+70.03	5	8		50		1			1		1								
-L-	16+00.33	16+75.33	LT	75.00			16+00.33		5	8	50		1				1		1								
-L-	14+12.36	14+87.36	RT	75.00			14+87.36		5	8	50		1				1		1								
-L-	16+17.39	16+92.39	RT	75.00				16+17.39	5	8		50		1			1		1								
SUBTOTAL				**300.00**													**4**		**4**								
LESS ANCHOR DEDUCTIONS																											
	GRAU-350 @ 50'			200																							
	TYPE III @18.75'			75																							
TOTAL				**25**													**4**		**4**								
SAY				**25**																							
			ADDITIONAL GUARDRAIL POST =	**5**																							

PROJECT REFERENCE NO.	SHEET NO.
17BP.8.R.13	4
R/W SHEET NO.	
ROADWAY DESIGN ENGINEER	HYDRAULICS ENGINEER

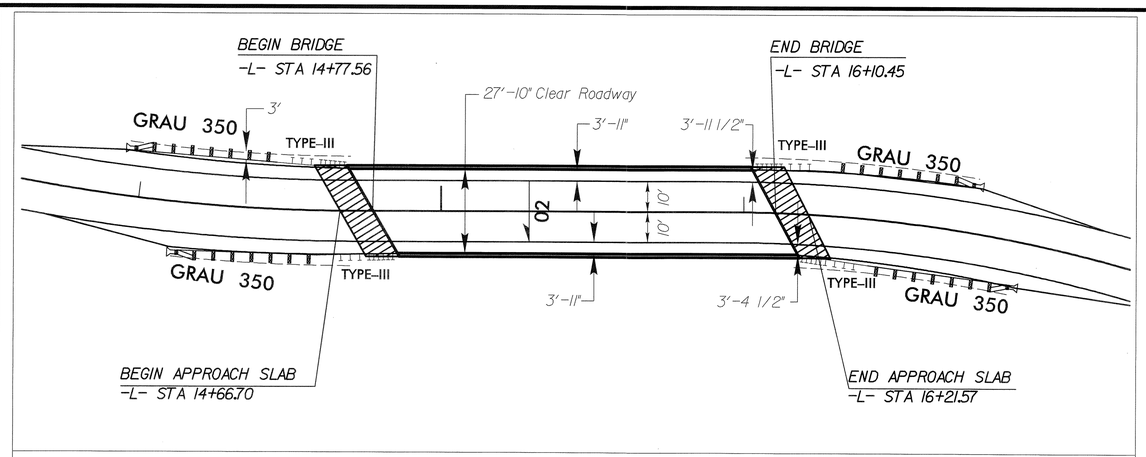

Sketch showing Dimensions of Pavement and Shoulder in Relation to the Proposed Bridge

-L-

PI Sta 13+59.63	PI Sta 16+70.51	PI Sta 19+97.94
Δ = 22° 12' 05.0" (LT)	Δ = 17° 31' 30.8" (RT)	Δ = 8° 13' 33.7" (LT)
D = 9° 52' 42.9"	D = 11° 48' 48.8"	D = 9° 10' 02.4"
L = 224.74'	L = 148.35'	L = 89.73'
T = 113.80'	T = 74.76'	T = 44.94'
R = 580.00'	R = 485.00'	R = 625.00'
e = 04	e = 04	e = 04
Runout = 83'	Runout = 83'	Runout = 83'
D.S. = 40 MPH	D.S. = 35 MPH	D.S. = 40 MPH

NAD 83/CORS 96
NC GRID

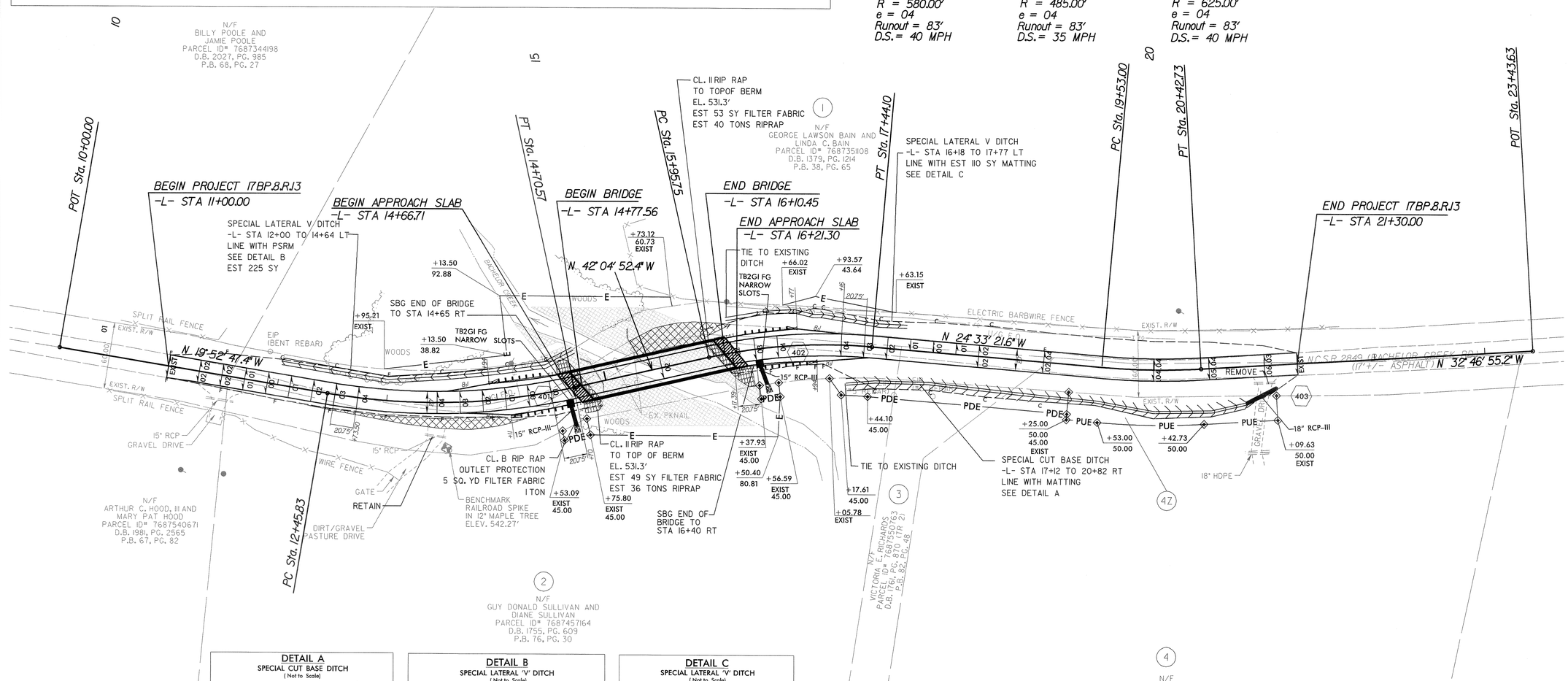

DETAIL A
SPECIAL CUT BASE DITCH
(Not to Scale)

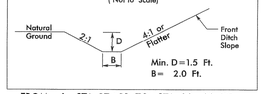

FROM -L- STA. 17+12 TO STA. 20+82 RT

DETAIL B
SPECIAL LATERAL 'V' DITCH
(Not to Scale)

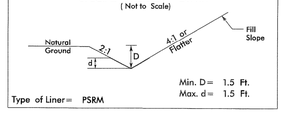

FROM -L- STA. 12+00 TO 14+64 LT

DETAIL C
SPECIAL LATERAL 'V' DITCH
(Not to Scale)

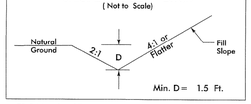

FROM -L- STA. 16+18 TO STA. 17+77 LT

NOTE: SEE PLAN SHEET 5 FOR PROFILE

NOTE: SEE SHEETS S-1 THRU S-24 FOR STRUCTURE PLANS

PAVEMENT REMOVAL

REVISIONS

8/17/99

PROJECT REFERENCE NO.	SHEET NO.
17BP.8.R.13	5

ROADWAY DESIGN ENGINEER

NORTH CAROLINA PROFESSIONAL SEAL 029712 ENGINEER AGNIESZKA J. NAU 9-11-13

HYDRAULICS ENGINEER

NORTH CAROLINA PROFESSIONAL SEAL 12786 ENGINEER STEVEN M. BONDOR 9-11-13

BRIDGE HYDRAULIC DATA

DESIGN DISCHARGE	= 460	CFS
DESIGN FREQUENCY	= 2	YRS
DESIGN HW ELEVATION	= 532.8	FT
BASE DISCHARGE	= 2201	CFS
BASE FREQUENCY	= 100	YRS
BASE HW ELEVATION	= 536.43	FT
OVERTOPPING DISCHARGE	= 950	CFS
OVERTOPPING FREQUENCY	= 5 +	YRS
OVERTOPPING ELEVATION	= 534.7	FT
DATE OF SURVEY	= 04/23/2012	
W.S. ELEVATION AT DATE OF SURVEY	= 526.8	FT

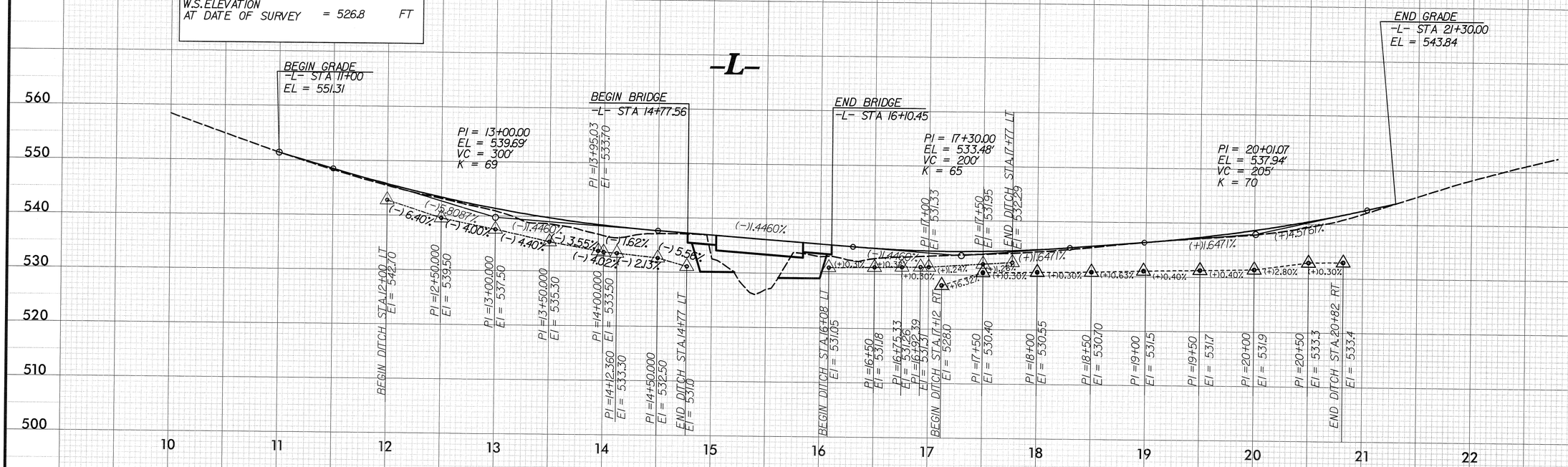

NOTE: SEE PLAN SHEET 4 FOR PLAN

NOTE: SEE SHEETS S-1 THRU S-24 FOR STRUCTURE PLANS

STATE OF NORTH CAROLINA
DIVISION OF HIGHWAYS

TRANSPORTATION MANAGEMENT PLAN

RANDOLPH COUNTY

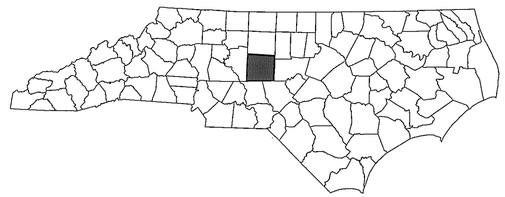

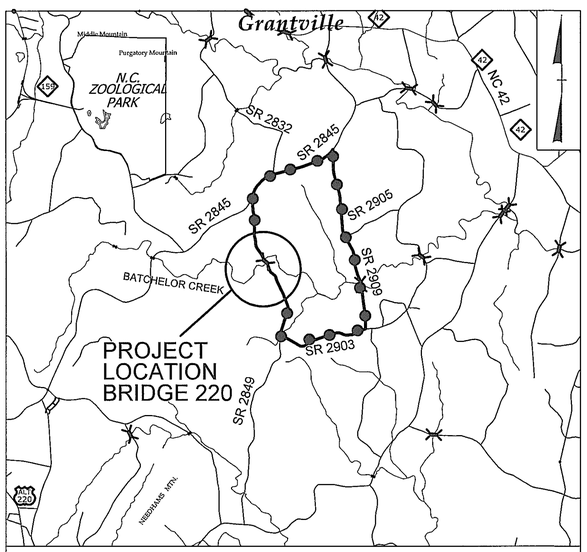

VICINITY MAP

OFF-SITE DETOUR ROUTE

LOCATION: BRIDGE NO. 220 ON SR 2849 (BACHELOR CREEK RD) OVER BACHELOR CREEK

TYPE OF WORK: GRADING, DRAINAGE, PAVING, & STRUCTURE

INDEX OF SHEETS

SHEET NO.	TITLE
TMP-1	TITLE SHEET, VICINITY MAP, AND INDEX OF SHEETS
TMP-1A	LIST OF APPLICABLE ROADWAY STANDARD DRAWINGS AND LEGEND
TMP-1B	TRANSPORTATION OPERATIONS PLAN: (MANAGEMENT STRATEGIES, GENERAL NOTES, AND PHASING)
TMP-2	OFF-SITE DETOUR
TMP-3	ROAD CLOSURE
SP-1	SIGN DESIGN

SHEET NO.
TMP-1

17BP.8.R.13

TIP PROJECT:

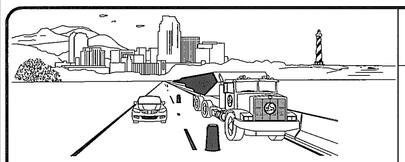

WORK ZONE SAFETY & MOBILITY
"from the MOUNTAINS to the COAST"

N.C.D.O.T. WORK ZONE TRAFFIC CONTROL
1561 MAIL SERVICE CENTER (MSC) RALEIGH, NC 27699-1561
750 N. GREENFIELD PARKWAY, GARNER, NC 27529 (DELIVERY)
PHONE: (919) 773-2800 FAX: (919) 771-2745

J. S. BOURNE, P.E. — STATE TRAFFIC MANAGEMENT ENGINEER
JOSEPH ISHAK, P.E. — TRAFFIC CONTROL PROJECT ENGINEER
_____ — TRAFFIC CONTROL PROJECT DESIGN ENGINEER
_____ — TRAFFIC CONTROL DESIGN ENGINEER

DIVISION OF HIGHWAYS · STATE OF NORTH CAROLINA · DEPARTMENT OF TRANSPORTATION · WORK ZONE TRAFFIC CONTROL

Prepared In the Office of:
SEPI ENGINEERING & CONSTRUCTION
1025 Wade Avenue
Raleigh, NC 27605
Tel:919-789-9977
Fax:919-789-9591
License: C-2197

APPROVED: Steven D. Miller
DATE: 5-8-13

SEAL

NORTH CAROLINA PROFESSIONAL SEAL 037026 ENGINEER STEVEN D. MILLER

$$$$$SYSTIME$$$$$
$$$$$DGN$$$$$
$$$$$USERNAME$$$$$

PROJ. REFERENCE NO.	SHEET NO.
17BP.8.R.13	TMP-1A

ROADWAY STANDARD DRAWINGS

THE FOLLOWING ROADWAY STANDARDS AS SHOWN IN "ROADWAY STANDARD DRAWINGS" - PROJECT SERVICES UNIT - N.C. DEPARTMENT OF TRANSPORTATION - RALEIGH, N.C., DATED JANAUARY 2012 ARE APPLICABLE TO THIS PROJECT AND BY REFERENCE HEREBY ARE CONSIDERED A PART OF THESE PLANS:

STD. NO.	TITLE
1101.01	WORK ZONE ADVANCE WARNING SIGNS
1101.03	TEMPORARY ROAD CLOSURES
1101.05	WORK ZONE VEHICLE ACCESSES
1101.11	TRAFFIC CONTROL DESIGN TABLES
1110.01	STATIONARY WORK ZONE SIGNS
1145.01	BARRICADES - TYPE III

LEGEND

GENERAL

- DIRECTION OF TRAFFIC FLOW
- DIRECTION OF PEDESTRIAN TRAFFIC FLOW
- EXIST. PVMT.
- NORTH ARROW
- PROPOSED PVMT.
- WORK AREA
- REMOVAL
- USER DEFINED (IF NEEDED)
- USER DEFINED (IF NEEDED)

TRAFFIC CONTROL DEVICES

- BARRICADE (TYPE III)
- CONE
- DRUM
- SKINNY DRUM
- TUBULAR MARKER
- TEMPORARY CRASH CUSHION
- FLASHING ARROW BOARD
- FLAGGER
- LAW ENFORCEMENT
- TRUCK MOUNTED ATTENUATOR (TMA)
- CHANGEABLE MESSAGE SIGN

TEMPORARY SIGNING

- PORTABLE SIGN
- STATIONARY SIGN
- STATIONARY OR PORTABLE SIGN

SIGNALS

- EXISTING
- PROPOSED
- TEMPORARY (TEMP)

PAVEMENT MARKINGS

- EXISTING LINES
- TEMPORARY LINES

PAVEMENT MARKERS

- CRYSTAL/CRYSTAL
- CRYSTAL/RED
- YELLOW/YELLOW

PAVEMENT MARKING SYMBOLS

- PAVEMENT MARKING SYMBOLS

APPROVED: [signature] DATE: 5-8-13

SEAL

NORTH CAROLINA PROFESSIONAL SEAL 037026 ENGINEER STEVEN D. MILLER

DIVISION OF HIGHWAYS STATE OF NORTH CAROLINA DEPARTMENT OF TRANSPORTATION WORK ZONE TRAFFIC CONTROL

ROADWAY STANDARD DRAWINGS & LEGEND

$$$$$$SYSTIME$$$$$
$$$$$$$$$$$$$$$$DGN$$$$$$$$$$$$$$$$$$$$$$$$$
$$$$USERNAME$$$$

PROJ. REFERENCE NO.	SHEET NO.
17BP.8.R.13	TMP-1B

MANAGEMENT STRATEGIES

- CLOSE SR 2849 (BACHELOR CREEK RD) AND DETOUR TRAFFIC OFF-SITE
- LOCAL ACCESS TO ALL RESIDENCES AND BUSINESSES WILL BE MAINTAINED BETWEEN CLOSURE POINTS AT ALL TIMES DURING CONSTRUCTION
- PROVIDE ONE MONTH NOTICE TO THE ENGINEER, RANDOLPH COUNTY EMERGENCY SERVICES, AND RANDOLPH COUNTY SCHOOL OFFICIALS PRIOR TO ROAD CLOSURE

GENERAL NOTES

CHANGES MAY BE REQUIRED WHEN PHYSICAL DIMENSIONS IN THE DETAIL DRAWINGS, STANDARD DETAILS, AND ROADWAY DETAILS ARE NOT ATTAINABLE TO MEET FIELD CONDITIONS OR RESULT IN DUPLICATE OR UNDESIRED OVERLAPPING OF DEVICES. MODIFICATION MAY INCLUDE: MOVING, SUPPLEMENTING, COVERING, OR REMOVAL OF DEVICES AS DIRECTED BY THE ENGINEER.

THE FOLLOWING GENERAL NOTES APPLY AT ALL TIMES FOR THE DURATION OF THE CONSTRUCTION PROJECT EXCEPT WHEN OTHERWISE NOTED IN THE PLAN OR DIRECTED BY THE ENGINEER.

TRAFFIC PATTERN ALTERATIONS

A) NOTIFY THE ENGINEER ONE MONTH PRIOR TO ANY TRAFFIC PATTERN ALTERATION.

SIGNING

B) INSTALL ADVANCE WORK ZONE WARNING SIGNS NO MORE THAN THREE (3) DAYS PRIOR TO THE BEGINNING OF CONSTRUCTION.

C) PROVIDE SIGNING AND DEVICES REQUIRED TO CLOSE THE ROAD ACCORDING TO THE ROADWAY STANDARD DRAWINGS AND TRAFFIC CONTROL PLANS.

PROVIDE SIGNING REQUIRED FOR THE OFF-SITE DETOUR ROUTE.

D) COVER OR REMOVE ALL SIGNS AND DEVICES REQUIRED TO CLOSE THE ROAD WHEN ROAD CLOSURE IS NOT IN OPERATION.

COVER OR REMOVE ALL SIGNS REQUIRED FOR THE OFF-SITE DETOUR WHEN THE DETOUR IS NOT IN OPERATION.

E) ENSURE ALL NECESSARY SIGNING IS IN PLACE PRIOR TO ALTERING ANY TRAFFIC PATTERN.

TRAFFIC CONTROL DEVICES

F) PLACE TYPE III BARRICADES, WITH "ROAD CLOSED" SIGN R11-2 ATTACHED, OF SUFFICIENT LENGTH TO CLOSE ENTIRE ROADWAY.

PHASING

STEP 1: USING RSD 1101.03 SHEET 1 OF 9, CLOSE BACHELOR CREEK ROAD (SR 2849) AND DETOUR TRAFFIC OFF-SITE AS SHOWN ON TMP-2. MAINTAIN ACCESS TO ALL RESIDENCES AND BUSINESSES BETWEEN CLOSURE POINTS.

STEP 2: REMOVE THE EXISTING STRUCTURE.

STEP 3: CONSTRUCT THE PROPOSED STRUCTURE AND ROADWAY.

STEP 4: PLACE FINAL PAVEMENT MARKINGS ACCORDING TO THE PAVEMENT MARKING PLANS.

STEP 5: OPEN BACHELOR CREEK ROAD (SR 2849) TO TRAFFIC AND REMOVE ALL TRAFFIC CONTROL DEVICES.

APPROVED: Steve Miller DATE: 5-8-13

SEAL

NORTH CAROLINA PROFESSIONAL SEAL 037026 ENGINEER STEVEN D. MILLER

DIVISION OF HIGHWAYS STATE OF NORTH CAROLINA DEPARTMENT OF TRANSPORTATION WORK ZONE TRAFFIC CONTROL

TRANSPORTATION OPERATIONS PLAN

$$$$$$SYSTIME$$$$$
$$$$$$$$$$$$$$$$$$DGN$$$$$$$$$$$$$$$$$$
$$$$$$USERNAME$$$$

PROJ. REFERENCE NO.	SHEET NO.
17BP.8.R.13	TMP-2

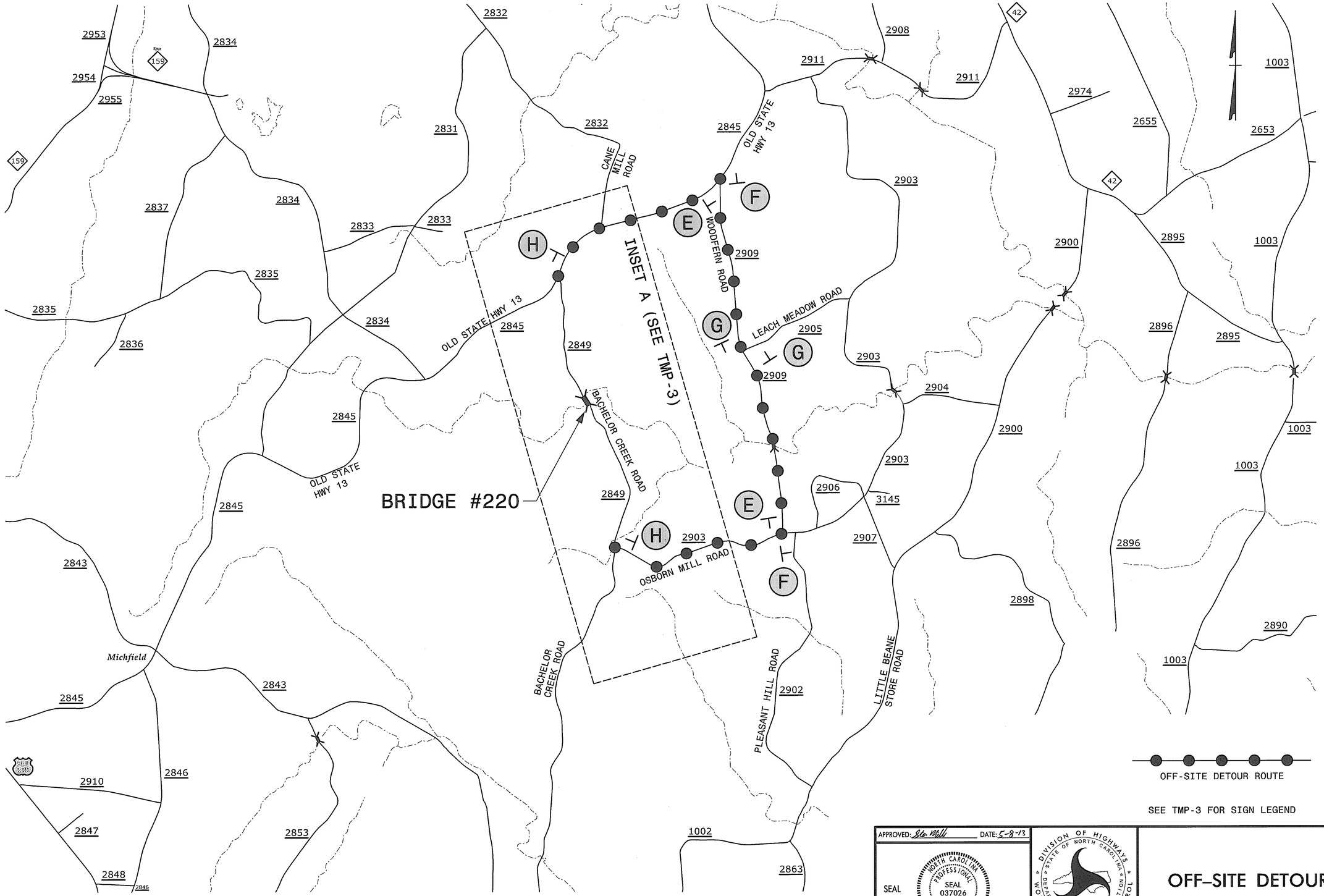

SEE TMP-3 FOR SIGN LEGEND

APPROVED: Steve Mills DATE: 5-8-13

SEAL

NORTH CAROLINA PROFESSIONAL SEAL 037026 ENGINEER STEVEN D. MILLER

DIVISION OF HIGHWAYS STATE OF NORTH CAROLINA DEPARTMENT OF TRANSPORTATION WORK ZONE TRAFFIC CONTROL

OFF-SITE DETOUR

$$$$SYSTIME$$$$
$$$$DGN$$$$
$$$$USERNAME$$$$

PROJ. REFERENCE NO.	SHEET NO.
17BP.8.R.13	TMP-3

INSET A

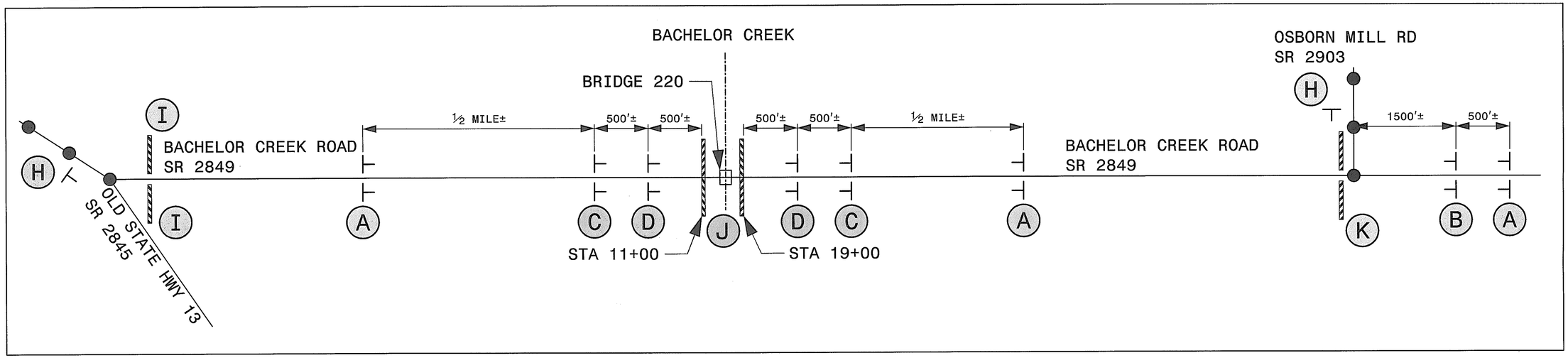

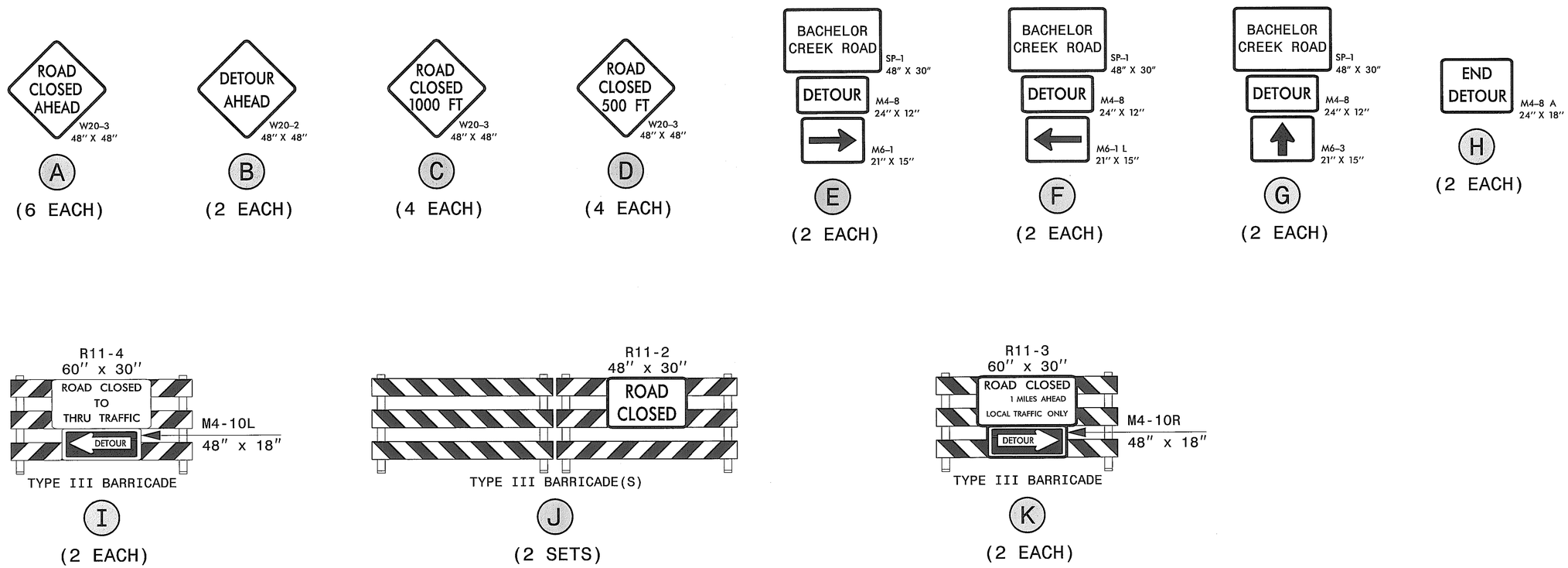

APPROVED: Steve Miller DATE: 5-8-13

SEAL

NORTH CAROLINA PROFESSIONAL SEAL 037026 ENGINEER STEVEN D. MILLER

DIVISION OF HIGHWAYS STATE OF NORTH CAROLINA DEPARTMENT OF TRANSPORTATION WORK ZONE TRAFFIC CONTROL

ROAD CLOSURE

$$$$$$$$SYSTIME$$$$$$$$DGN$$$$$$$$$$$$$$$$$$$$USERNAME$$$$

PROJ. REFERENCE NO.	SHEET NO.
17BP.8.R.13	SP-1

SEPI ENGINEERING & CONSTRUCTION

Sepi Engineering Group
1025 Wade Avenue
Raleigh, NC 27605
Phone: (919)-789-9977
Fax: (919)-789-9591

TRANSPORTATION TRAFFIC SURVEYING ENVIRONMENTAL SITE CIVIL INSPECTIONS CONSTRUCTION

SIGN NUMBER: SP-1
TYPE: STATIONARY
QUANTITY: SEE PLANS

BACKG COLOR: Fluorescent Orange
COPY COLOR: Black

SIGN WIDTH: 48"
HEIGHT: 30"
TOTAL AREA: 10.0 Sq.Ft.

BORDER TYPE: FLUSH
RECESS: 0.38"
WIDTH: 0.63"
RADII: 1.5"

NO. Z BARS:
LENGTH:

MAT'L: 0.125" (3.2 mm) ALUMINUM

DESIGN BY: S MILLER
PROJECT ID: 17BP.8.R.13
CHECKED BY: R DRAYTON
DIV: 8
DATE: Apr 30, 2012

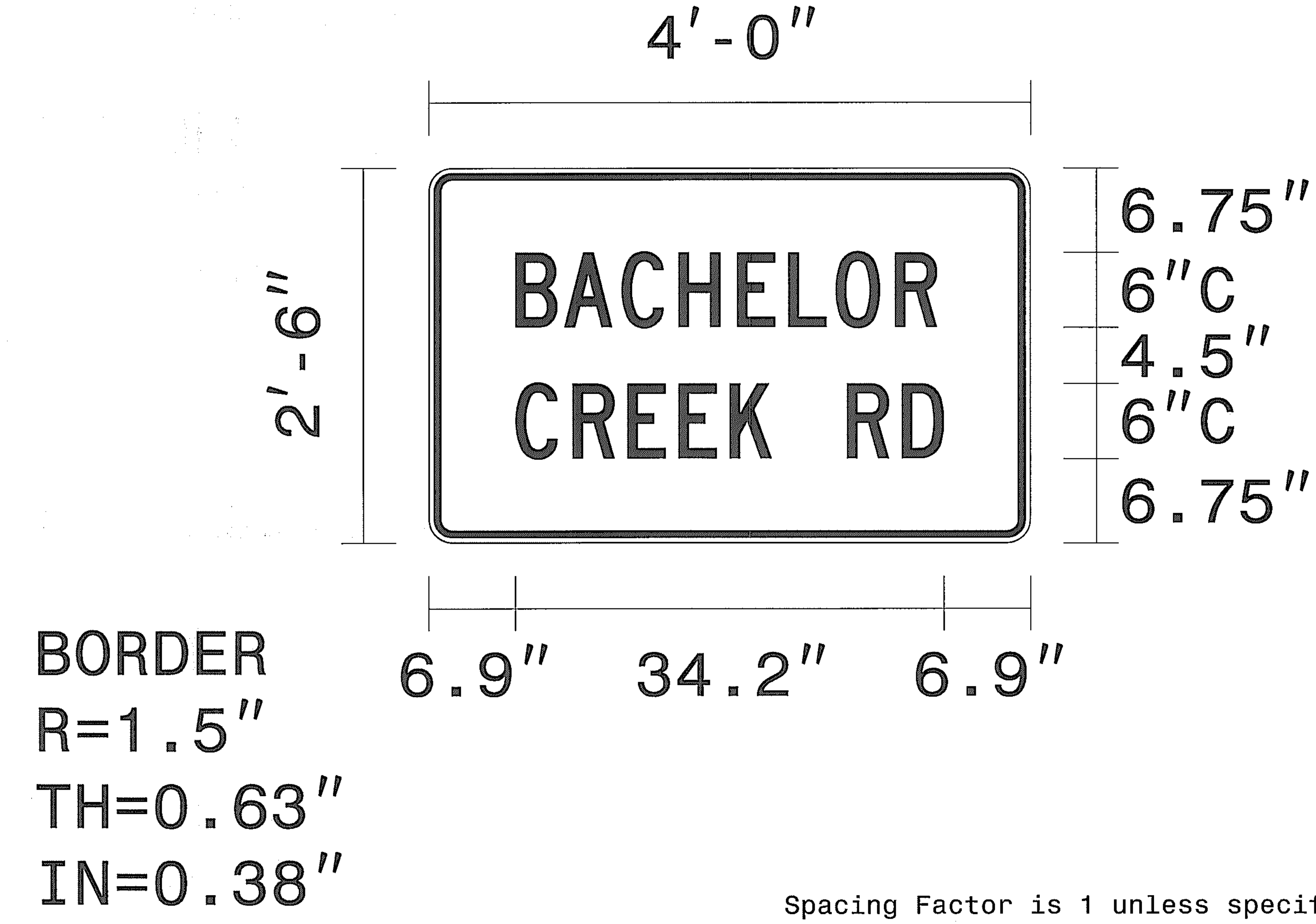

Spacing Factor is 1 unless specified otherwise

USE NOTES

1. Legend and border shall be direct applied black non-reflective sheeting.
2. Background shall be Type VII, VIII, or IX (prismatic) fluorescent orange retroreflective sheeting.

LETTER POSITIONS

Letter locations are panel edge to lower left corner

																												Series/Size Text Length
	B	A	C	H	E	L	O	R																				C 2000
	6.9	10.8	15.4	19.9	24.6	28.7	32.5	37.2																				33.7
	C	R	E	E	K		R	D																				C 2000
	6.9	11.5	15.8	19.9	24	27.4	33.4	37.7																				34.2

FILENAME: Bachelor Creek Rd

SEPI ENGINEERING & CONSTRUCTION SIGN DETAIL

APPROVED: [signature] DATE: 5-8-13

SEAL

NORTH CAROLINA PROFESSIONAL SEAL 037026 ENGINEER STEVEN D. MILLER

DIVISION OF HIGHWAYS STATE OF NORTH CAROLINA DEPARTMENT OF TRANSPORTATION WORK ZONE TRAFFIC CONTROL

SPECIAL SIGN DESIGN

$$$$$$SYSTIME$$$$$
$$$$$$$$$$$DGN$$$$$$$$$$$$$$$$$$$$$
$$$$USERNAME$$$$

RELEASE FOR CONSTRUCTION

STATE	STATE PROJECT REFERENCE NO.	SHEET NO.	TOTAL SHEETS
N.C.	17BP.8.R.13	EC-1	

STATE PROJ. NO.	F. A. PROJ. NO.	DESCRIPTION
17BP.8.R.13		

STATE OF NORTH CAROLINA
DIVISION OF HIGHWAYS

PLAN FOR PROPOSED
HIGHWAY EROSION CONTROL

RANDOLPH COUNTY

LOCATION: BRIDGE NO. 220 ON SR 2849 (BACHELOR CREEK RD) OVER BACHELOR CREEK

TYPE OF WORK: GRADING, DRAINAGE, PAVING, STRUCTURE

PROJECT: 17BP.8.R.13

CONTRACT:

See Sheet 1-C For Survey Control Sheet

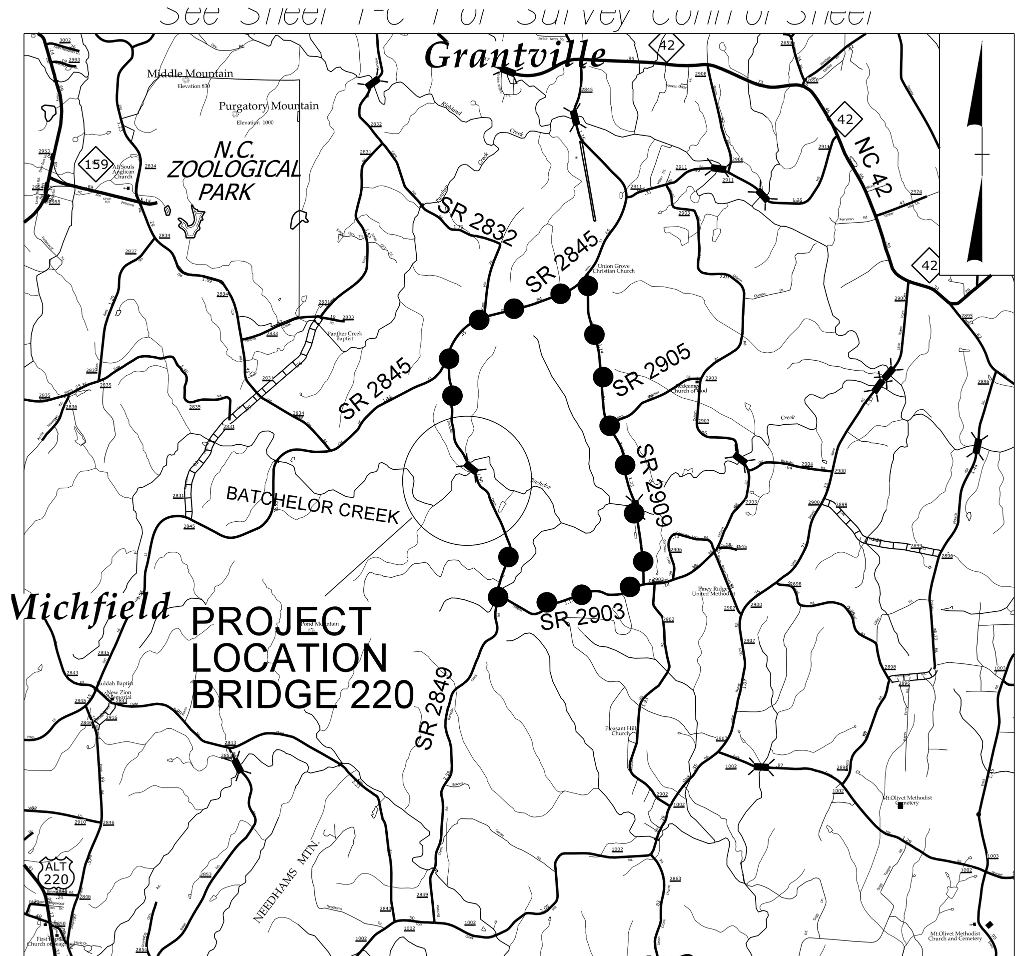

VICINITY MAP

OFF–SITE DETOUR ROUTE

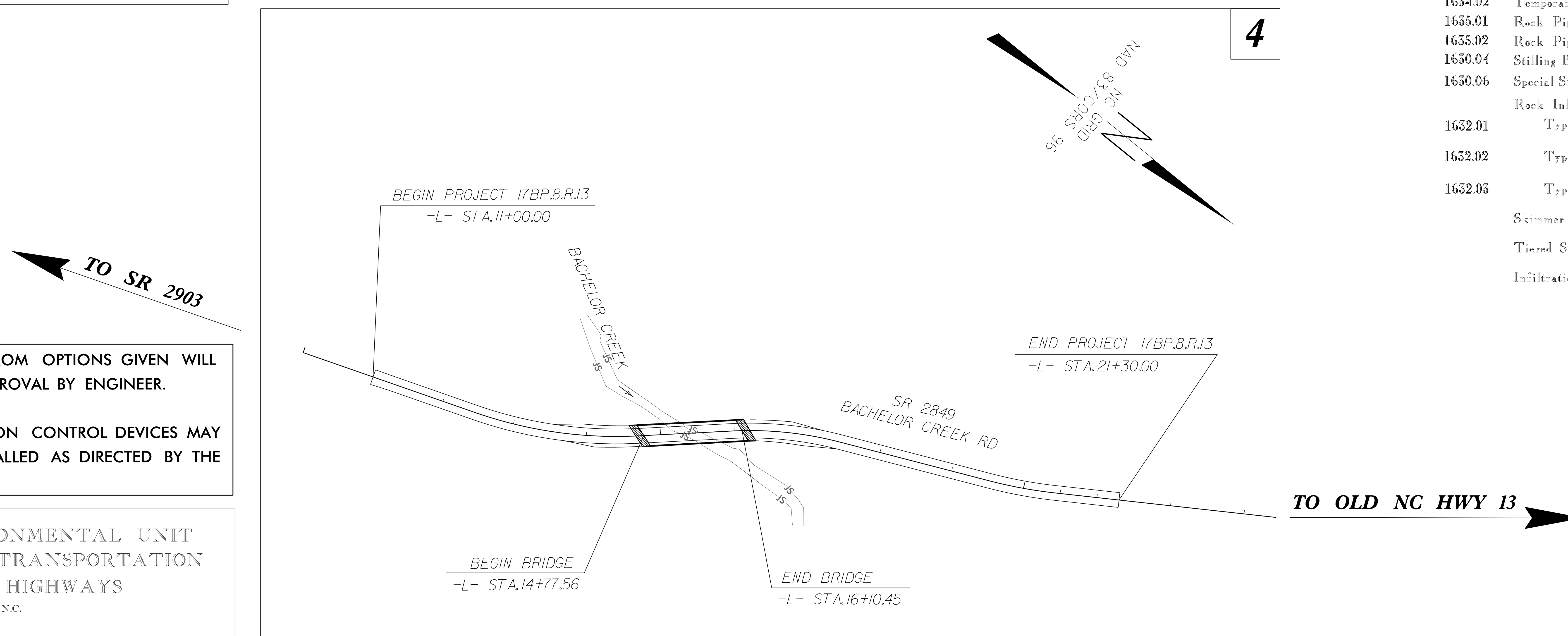

THIS PROJECT IS NOT WITHIN MUNICIPAL BOUNDARIES
CLEARING ON THIS PROJECT SHALL BE PERFORMED TO THE LIMITS ESTABLISHED BY METHOD III.

NOTES: ANY DEVIATION FROM OPTIONS GIVEN WILL REQUIRE PRIOR APPROVAL BY ENGINEER.

ADDITIONAL EROSION CONTROL DEVICES MAY NEED TO BE INSTALLED AS DIRECTED BY THE ENGINEER.

ROADSIDE ENVIRONMENTAL UNIT
DEPARTMENT OF TRANSPORTATION
DIVISION OF HIGHWAYS
RALEIGH, N.C.

2012 STANDARD SPECIFICATIONS

EROSION AND SEDIMENT CONTROL MEASURES

Std. #	Description	Symbol
1630.03	Temporary Silt Ditch	TSD
1630.05	Temporary Diversion	TD
1605.01	Temporary Silt Fence	
1606.01	Special Sediment Control Fence	
1622.01	Temporary Berms and Slope Drains	
1630.02	Silt Basin Type B	
1633.01	Temporary Rock Silt Check Type-A	
	Temporary Rock Silt Check Type-A with Matting and Polyacrylamide (PAM)	
1633.02	Temporary Rock Silt Check Type-B	
	Wattle/Coir Fiber Wattle	EW / CFW
	Wattle/Coir Fiber Wattle with Polyacrylamide (PAM)	
1634.01	Temporary Rock Sediment Dam Type-A	
1634.02	Temporary Rock Sediment Dam Type-B	
1635.01	Rock Pipe Inlet Sediment Trap Type-A	
1635.02	Rock Pipe Inlet Sediment Trap Type-B	
1630.04	Stilling Basin	
1630.06	Special Stilling Basin	
	Rock Inlet Sediment Trap:	
1632.01	Type A	A
1632.02	Type B	B
1632.03	Type C	C
	Skimmer Basin	
	Tiered Skimmer Basin	
	Infiltration Basin	

THIS PROJECT CONTAINS EROSION CONTROL PLANS FOR CLEARING AND GRUBBING PHASE OF CONSTRUCTION.

THIS PROJECT CONTAINS EROSION CONTROL PLANS FOR FINAL GRADE PHASE OF CONSTRUCTION.

GRAPHIC SCALES

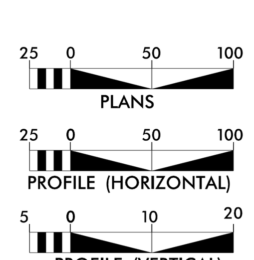

ROADSIDE ENVIRONMENTAL UNIT
DIVISION OF HIGHWAYS
STATE OF NORTH CAROLINA

THESE EROSION AND SEDIMENT CONTROL PLANS COMPLY WITH THE REGULATIONS SET FORTH BY THE NCG–010000 GENERAL CONSTRUCTION PERMIT EFFECTIVE AUGUST 3, 2011 ISSUED BY THE NORTH CAROLINA DEPARTMENT OF ENVIRONMENT AND NATURAL RESOURCES DIVISION OF WATER QUALITY.

STEVEN BONDOR, PE
LEVEL III NAME

3077
LEVEL III CERTIFICATION NO.

GREENHORNE & O'MARA
CONSULTING ENGINEERS
5565 CENTERVIEW DRIVE, SUITE 107
RALEIGH, NC 27606
(919) 851-1919 FAX (919) 851-8393
LICENSE #: F-0148

Roadway Standard Drawings

The following roadway english standards as appear in "Roadway Standard Drawings"– Roadway Design Unit – N. C. Department of Transportation – Raleigh, N. C., dated January 2012 and the latest revison thereto are applicable to this project and by reference hereby are considered a part of these plans.

1604.01	Railroad Erosion Control Detail
1605.01	Temporary Silt Fence
1606.01	Special Sediment Control Fence
1607.01	Gravel Construction Entrance
1622.01	Temporary Berms and Slope Drains
1630.01	Riser Basin
1630.02	Silt Basin Type B
1630.03	Temporary Silt Ditch
1630.04	Stilling Basin
1630.05	Temporary Diversion
1630.06	Special Stilling Basin
1631.01	Matting Installation
1632.01	Rock Inlet Sediment Trap Type A
1632.02	Rock Inlet Sediment Trap Type B
1632.03	Rock Inlet Sediment Trap Type C
1633.01	Temporary Rock Silt Check Type A
1633.02	Temporary Rock Silt Check Type B
1634.01	Temporary Rock Sediment Dam Type A
1634.02	Temporary Rock Sediment Dam Type B
1635.01	Rock Pipe Inlet Sediment Trap Type A
1635.02	Rock Pipe Inlet Sediment Trap Type B
1640.01	Coir Fiber Baffle
1645.01	Temporary Stream Crossing

$$$$SYSTIME$$$$ $$$$DGN$$$$ $$$$USERNAME$$$$

BRIDGE 750220

RELEASE FOR CONSTRUCTION

PROJECT REFERENCE NO.	SHEET NO.
17BP.8.R.13	EC-2
R/W SHEET NO.	
ROADWAY DESIGN ENGINEER	HYDRAULICS ENGINEER

WATTLE WITH POLYACRYLAMIDE (PAM) DETAIL

GREENHORNE & O'MARA
CONSULTING ENGINEERS
5365 CENTERVIEW DRIVE, SUITE 107
RALEIGH, NC 27606
(919) 851-1919 FAX (919) 851-8393
LICENSE #: F-0148

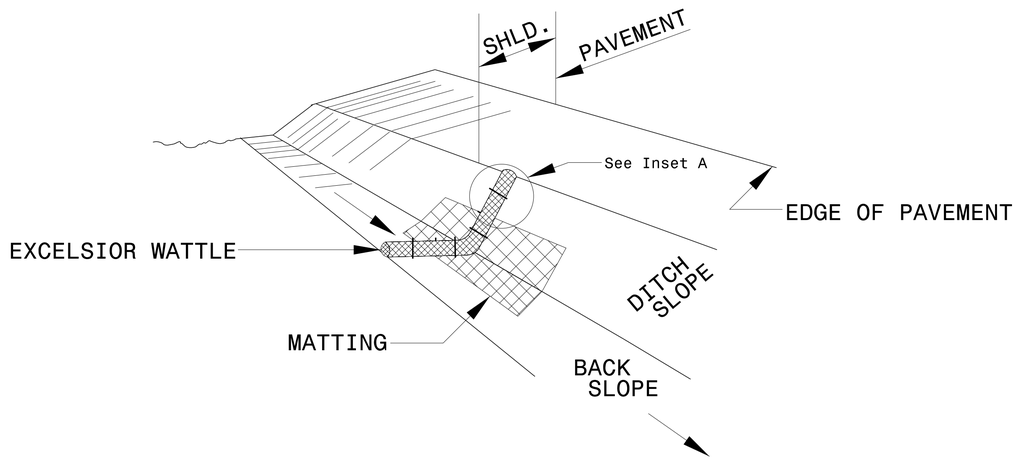

ISOMETRIC VIEW

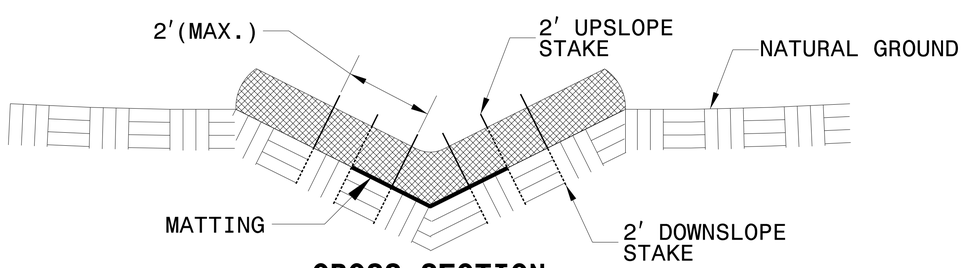

CROSS SECTION VEE DITCH

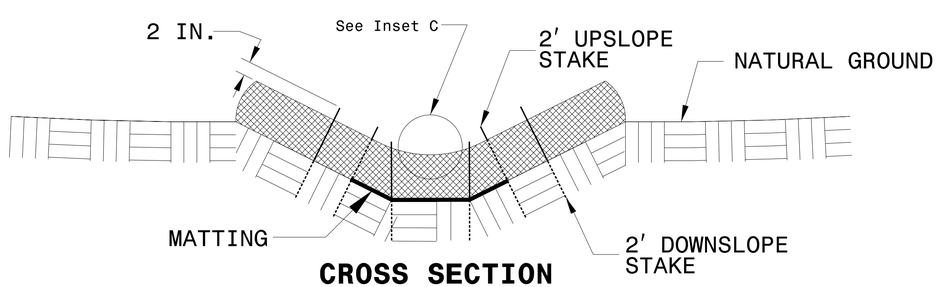

CROSS SECTION TRAPEZOIDAL DITCH

NOTES:

USE MINIMUM 12 IN. DIAMETER EXCELSIOR WATTLE.

USE 2 FT. WOODEN STAKES WITH A 2 IN. BY 2 IN. NOMINAL CROSS SECTION.

ONLY INSTALL WATTLE(S) TO A HEIGHT IN DITCH SO FLOW WILL NOT WASH AROUND WATTLE AND SCOUR DITCH SLOPES AND AS DIRECTED.

INSTALL A MINIMUM OF 2 UPSLOPE STAKES AND 4 DOWNSLOPE STAKES AT AN ANGLE TO WEDGE WATTLE TO BOTTOM OF DITCH.

PROVIDE STAPLES MADE OF 0.125 IN. DIAMETER STEEL WIRE FORMED INTO A U SHAPE NOT LESS THAN 12" IN LENGTH.

INSTALL STAPLES APPROXIMATELY EVERY 1 LINEAR FOOT ON BOTH SIDES OF WATTLE AND AT EACH END TO SECURE IT TO THE SOIL.

INSTALL MATTING IN ACCORDANCE WITH SECTION 1631 OF THE STANDARD SPECIFICATIONS.

PRIOR TO POLYACRYLAMIDE (PAM) APPLICATION, OBTAIN A SOIL SAMPLE FROM PROJECT LOCATION, AND FROM OFFSITE MATERIAL, AND ANALYZE FOR APPROPRIATE PAM FLOCCULANT TO BE APPLIED TO EACH WATTLE.

INITIALLY APPLY 2 OUNCES OF ANIONIC OR NEUTRALLY CHARGED PAM OVER WATTLE WHERE WATER WILL FLOW AND 1 OUNCE OF PAM ON MATTING ON EACH SIDE OF WATTLE. REAPPLY PAM AFTER EVERY RAINFALL EVENT THAT IS EQUAL TO OR EXCEEDS 0.50 IN.

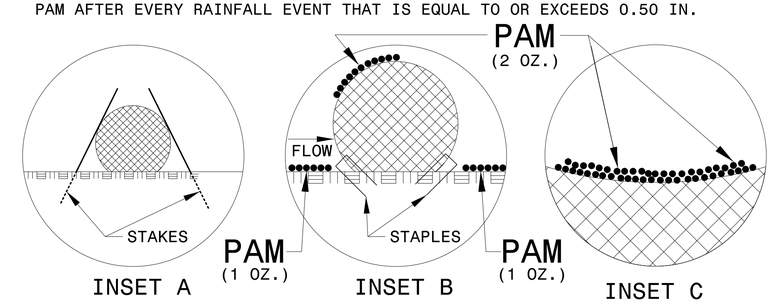

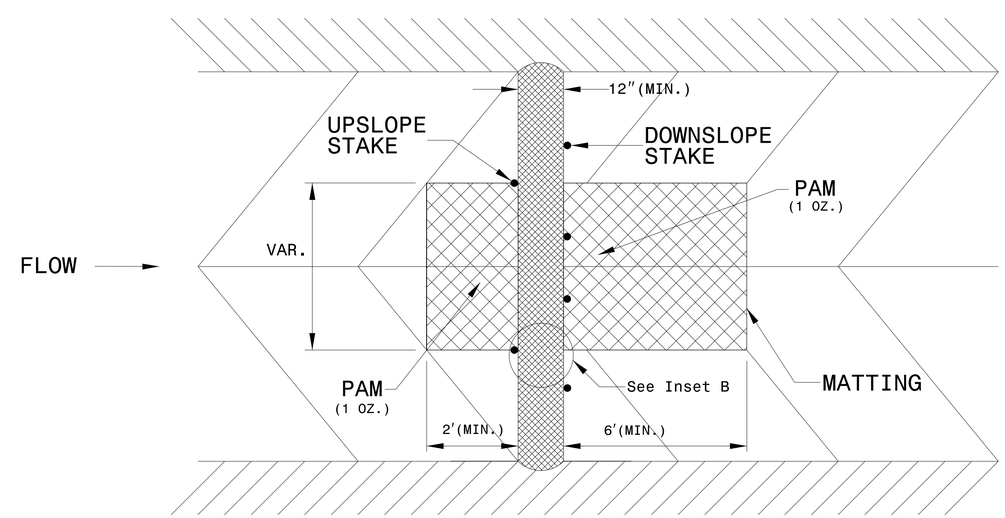

TOP VIEW

BRIDGE 750220

DIVISION OF HIGHWAYS
STATE OF NORTH CAROLINA

GREENHORNE & O'MARA
CONSULTING ENGINEERS
5365 CENTERVIEW DRIVE, SUITE 107
RALEIGH, NC 27606
(919) 851-1959 FAX (919) 851-8393
LICENSE #: F-0148

PROJECT REFERENCE NO.	SHEET NO.
I7BP.8.R.13	EC-3
ROADWAY DESIGN ENGINEER	HYDRAULICS ENGINEER

RELEASE FOR CONSTRUCTION

SOIL STABILIZATION SUMMARY SHEET

MATTING FOR EROSION CONTROL

CONST SHEET NO.	LINE	FROM STATION	TO STATION	SIDE	ESTIMATE (SY)
4	L	16+18	20+50	LT	455
4	L	17+12	20+82	RT	470
4					
				SUBTOTAL	925
MISCELLANEOUS MATTING TO BE INSTALLED AS DIRECTED BY THE ENGINEER					
				TOTAL	925
				SAY	

PERMANENT SOIL REINFORCEMENT MAT

CONST SHEET NO.	LINE	FROM STATION	TO STATION	SIDE	ESTIMATE (SY)
4	L	12+00	14+64	LT	225
				SUBTOTAL	225
		ADDITIONAL PSRM TO BE INSTALLED			
				TOTAL	225
				SAY	225

BRIDGE 750220

DIVISION OF HIGHWAYS
STATE OF NORTH CAROLINA

RELEASE FOR CONSTRUCTION

PROJECT REFERENCE NO.	SHEET NO.
17BP.8.R.13	EC-3A
ROADWAY DESIGN ENGINEER	HYDRAULICS ENGINEER

GREENHORNE & O'MARA
CONSULTING ENGINEERS
5365 CENTERVIEW DRIVE, SUITE 107
RALEIGH, NC 27606
(919) 851-1919 FAX (919) 851-8393
LICENSE #: F-0148

SOIL STABILIZATION TIMEFRAMES

SITE DESCRIPTION	STABILIZATION TIME	TIMEFRAME EXCEPTIONS
PERIMETER DIKES, SWALES, DITCHES AND SLOPES	7 DAYS	NONE
HIGH QUALITY WATER (HQW) ZONES	7 DAYS	NONE
SLOPES STEEPER THAN 3:1	7 DAYS	IF SLOPES ARE 10' OR LESS IN LENGTH AND ARE NOT STEEPER THAN 2:1, 14 DAYS ARE ALLOWED.
SLOPES 3:1 OR FLATTER	14 DAYS	7 DAYS FOR SLOPES GREATER THAN 50' IN LENGTH.
ALL OTHER AREAS WITH SLOPES FLATTER THAN 4:1	14 DAYS	NONE, EXCEPT FOR PERIMETERS AND HQW ZONES.

8/17/99

BRIDGE 750220

EROSION CONTROL PLAN

RELEASE FOR CONSTRUCTION

PROJECT REFERENCE NO.	SHEET NO.
17.BP.8.R.13	EC-4/CONST.4
R/W SHEET NO.	
ROADWAY DESIGN ENGINEER	HYDRAULICS ENGINEER

GREENHORNE & O'MARA
CONSULTING ENGINEERS
5565 CENTERVIEW DRIVE, SUITE 107
RALEIGH, NC 27606
(919) 851-1919 FAX (919) 851-8393
LICENSE #: F-0148

0 50 100

STEVEN BONDOR, PE
LEVEL III NAME

3077
LEVEL III CERTIFICATION NO.

CLEARING AND GRUBBING
EROSION CONTROL FOR
CONSTRUCTION SHEET 4

NOTE:
PLACE TEMPORARY ROCK SEDIMENT DAMS TYPE – B AND TEMPORARY ROCK SILT CHECKS TYPE – A AT DRAINAGE OUTLETS.

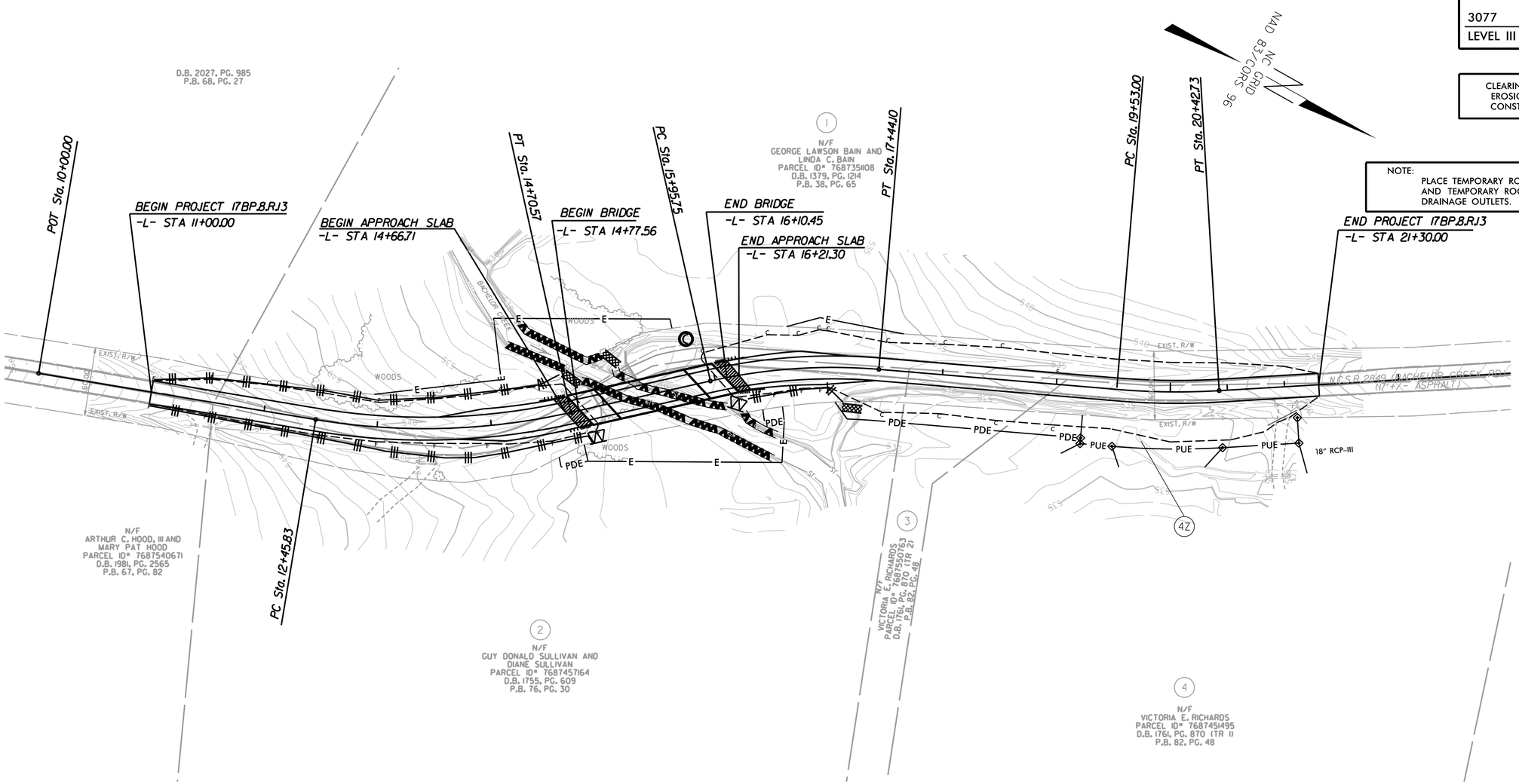

SYSTIME $$$$
DGN $$$$
USERNAME $$$$

750220_hyd_ec_psh4.dgn 9/19/2013 11:21:32 AM

8/17/99

BRIDGE 750220

EROSION CONTROL PLAN

RELEASE FOR CONSTRUCTION

PROJECT REFERENCE NO.	SHEET NO.
17BP.8.R.13	EC-5/CONST.4
R/W SHEET NO.	
ROADWAY DESIGN ENGINEER	HYDRAULICS ENGINEER

GREENHORNE & O'MARA
CONSULTING ENGINEERS
5565 CENTERVIEW DRIVE, SUITE 107
RALEIGH, NC 27606
(919) 851-1919 FAX (919) 851-8393
LICENSE #: F-0148

0 50 100

STEVEN BONDOR, PE
LEVEL III NAME

3077
LEVEL III CERTIFICATION NO.

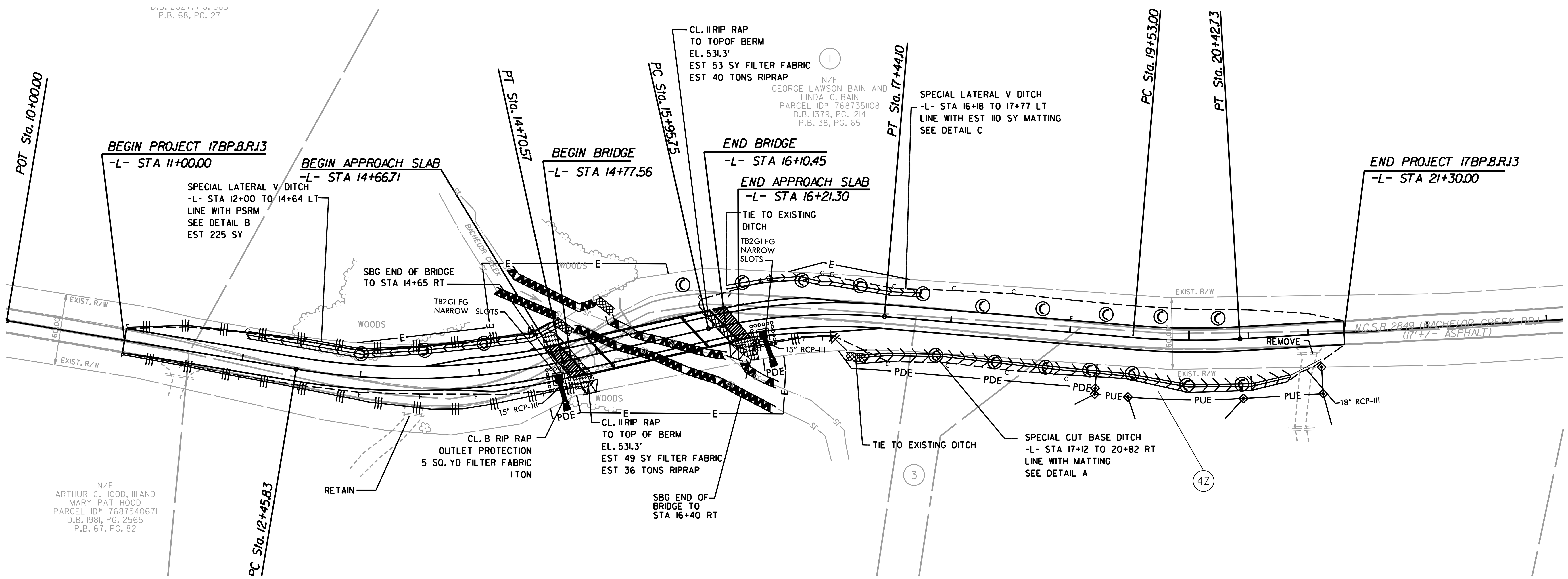

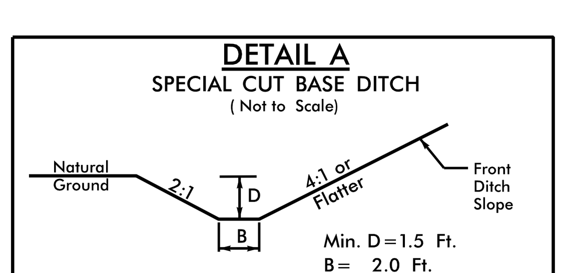

FROM -L- STA. 17+12 TO STA. 20+82 RT

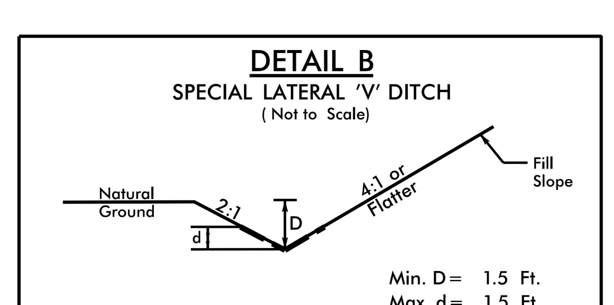

FROM -L- STA. 12+00 TO 14+64 LT

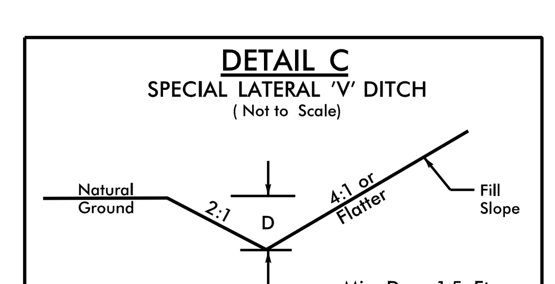

FROM -L- STA. 16+18 TO STA. 17+77 LT

$$$$$$$SYSTIME$$$$$
$$$$$$$$$$DGN$$$$$$$$$$$$$$$
$$$$USERNAME$$$$

750220_hyd_ec_psh5.dgn 9/19/2013 11:23:14 AM

0 2.5 5	PROJ. REFERENCE NO.	SHEET NO.
	17BP.8.R.13	X-1

SEPI ENGINEERING & CONSTRUCTION
1025 Wade Avenue
Raleigh, NC 27605
Tel:919-789-9977
Fax:919-789-9591
License: C-2197

8/23/99
$$$$$$SYSTIME$$$$$
$$$$$$DGN$$$$$$$$$$$$$$$$$$$$$$
$$$$$USERNAME$$$$

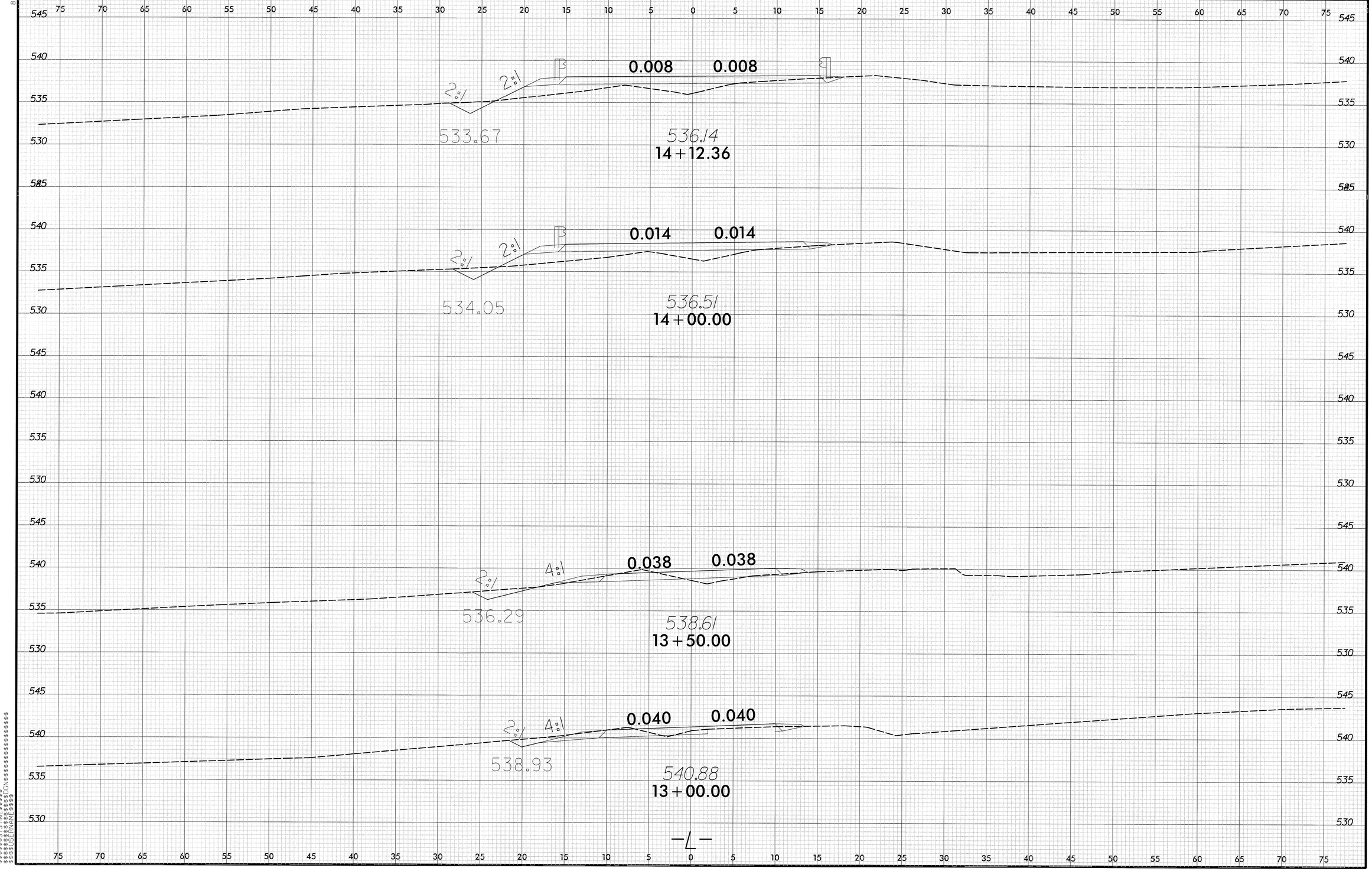

0 2.5 5
PROJ. REFERENCE NO.
17BP.8.R.13
SHEET NO.
X-2
0.008
0.008
2:1
2:1
533.67
536.14
14+12.36
0.014
0.014
2:1
2:1
534.05
536.51
14+00.00
0.038
0.038
2:1
4:1
536.29
538.61
13+50.00
0.040
0.040
2:1
4:1
538.93
540.88
13+00.00
-L-

8/23/99
0 2.5 5
PROJ. REFERENCE NO.
17BP.8.R.13
SHEET NO.
X-3
75 70 65 60 55 50 45 40 35 30 25 20 15 10 5 0 5 10 15 20 25 30 35 40 45 50 55 60 65 70 75
540
535
530
525
520
0.020
0.020
526.95
15+50.00
545
540
535
530
525
0.020
0.020
532.41
15+00.00
540
535
530
525
14+77.56
BEGIN BRIDGE
540
535
530
525
0.010
0.010
2:1
2:1
533.47
536.98
14+50.00
-L-
$$$$$SYSTIME$$$$$
$$$$$$$$$$DGN$$$$$$$$$$$$$$$$$$$$$$$$$
$$$$USERNAME$$$$

8/23/99

0 2.5 5	PROJ. REFERENCE NO.	SHEET NO.
	17BP.8.R.13	X-4

$$$$$$SYSTIME$$$$$$
$$$$$$$$$$$$$$$$DGN$$$$$$$$$$$$$$$$$$$$
$$$$$USERNAME$$$$$

0 2.5 5	PROJ. REFERENCE NO.	SHEET NO.
	17BP.8.R.13	X-5

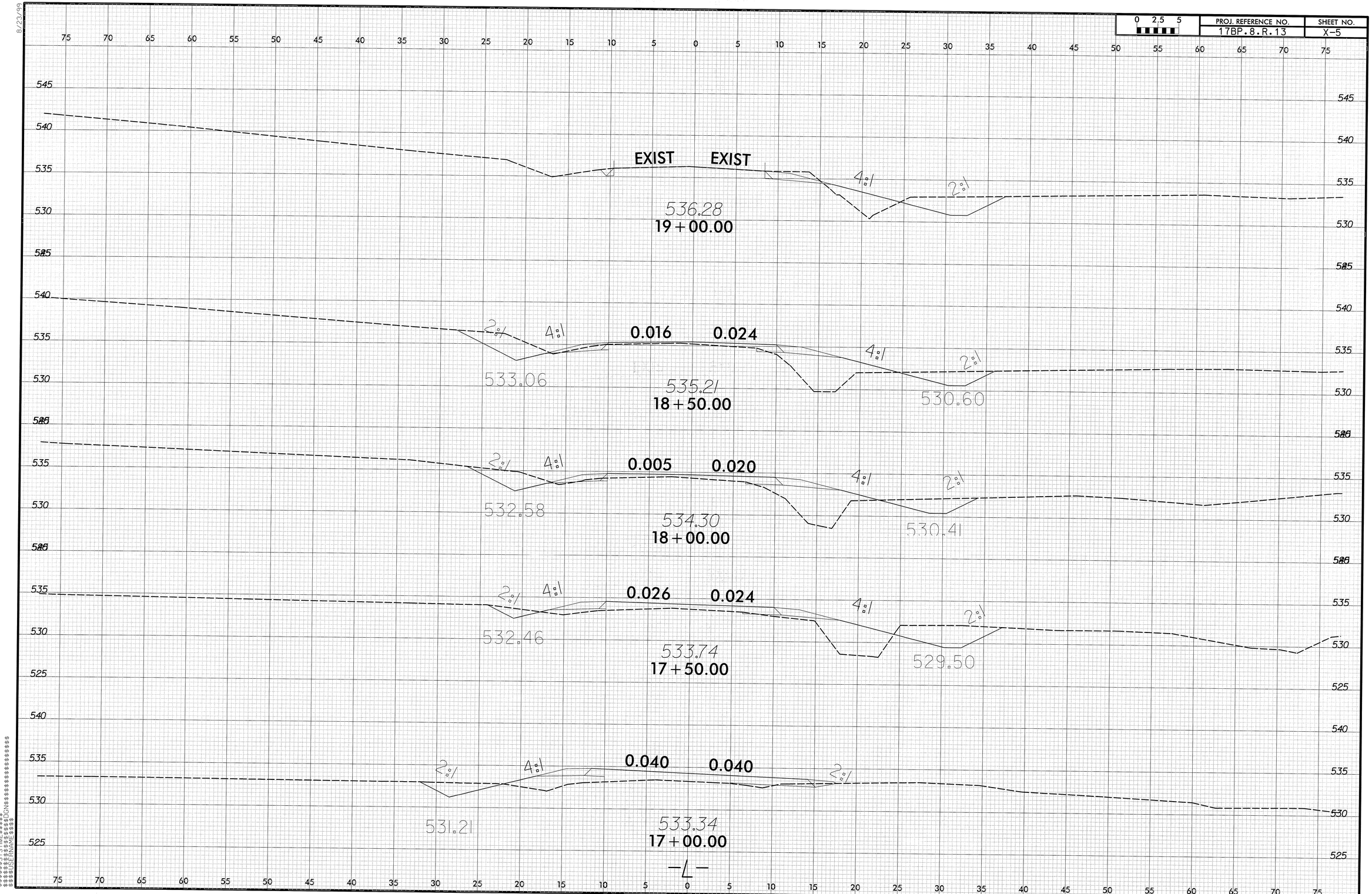

8/23/99

0 2.5 5	PROJ. REFERENCE NO.	SHEET NO.
	17BP.8.R.13	X-6

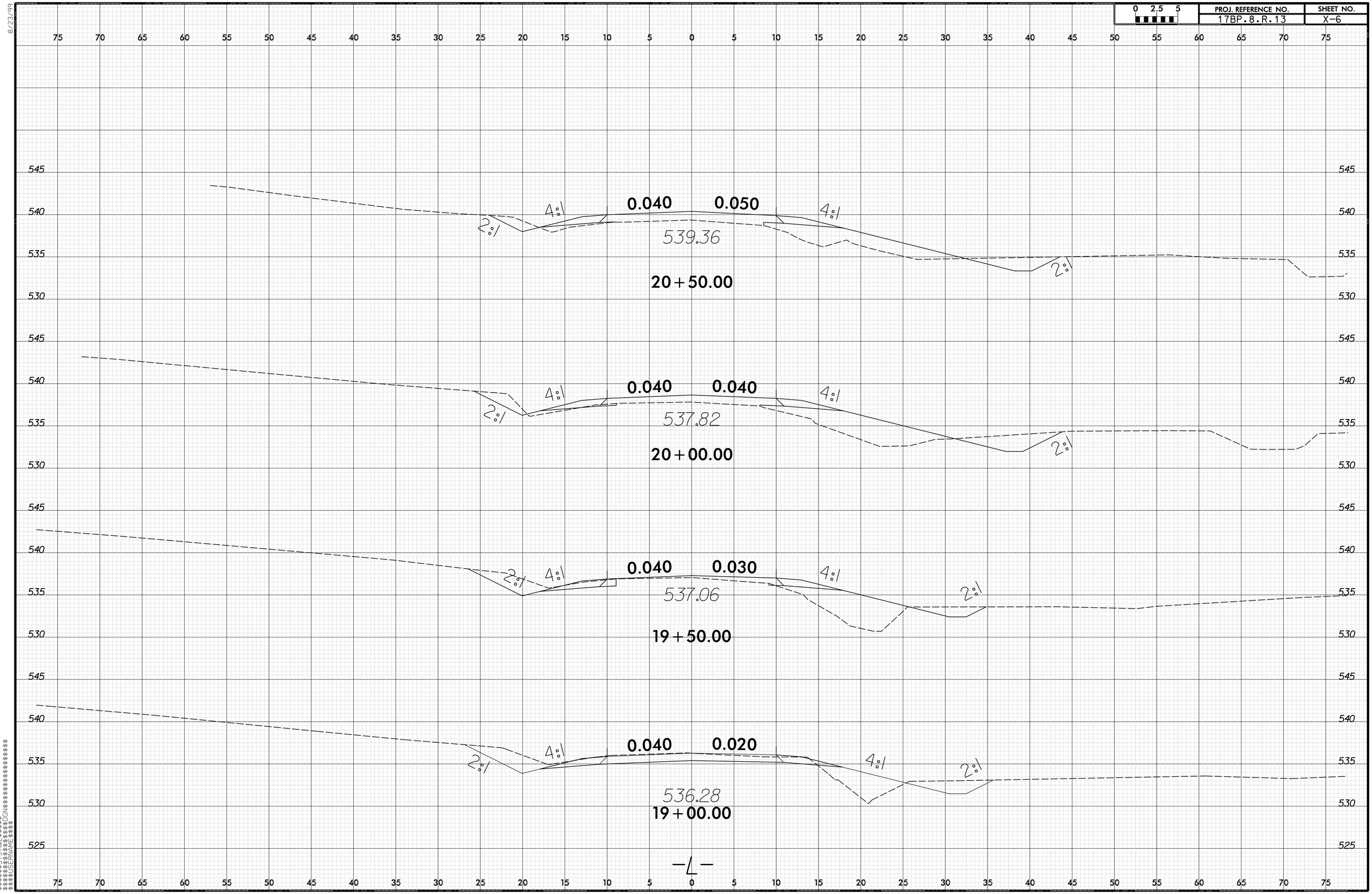

$$$$SYSTIME$$$$
$$$$DGN$$$$
$$$$DGNNAME$$$$

0 2.5 5
PROJ. REFERENCE NO.
17BP.8.R.13
SHEET NO.
X-7
8/23/99
545.15
21+50.00
4:1
0.030
0.060
DRIVEWAY
541.87
21+00.00
-L-

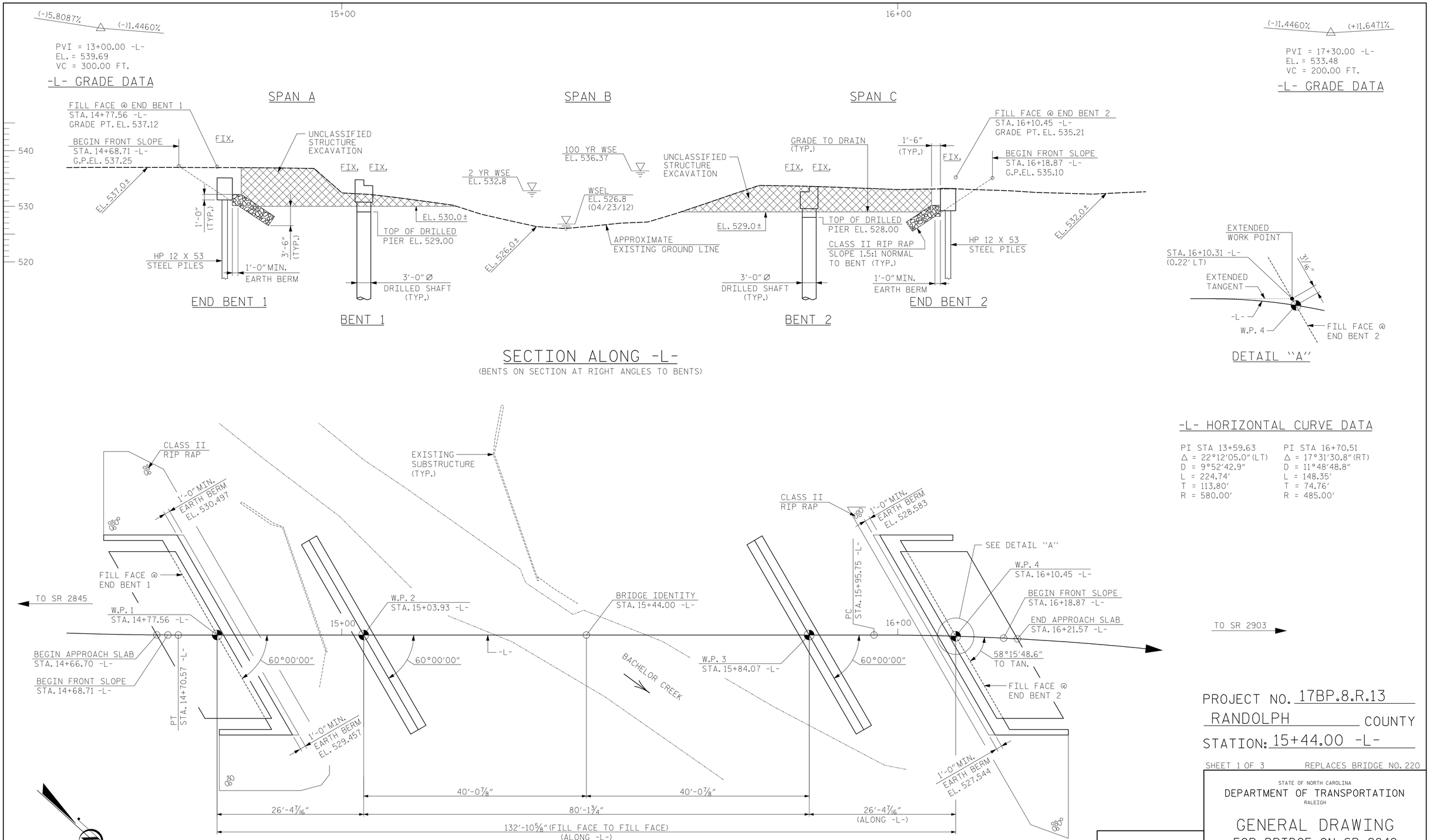

-L- HORIZONTAL CURVE DATA

PI STA 13+59.63	PI STA 16+70.51
Δ = 22°12'05.0" (LT)	Δ = 17°31'30.8" (RT)
D = 9°52'42.9"	D = 11°48'48.8"
L = 224.74'	L = 148.35'
T = 113.80'	T = 74.76'
R = 580.00'	R = 485.00'

PROJECT NO. 17BP.8.R.13
RANDOLPH COUNTY
STATION: 15+44.00 -L-

SHEET 1 OF 3 REPLACES BRIDGE NO. 220

STATE OF NORTH CAROLINA
DEPARTMENT OF TRANSPORTATION
RALEIGH

GENERAL DRAWING
FOR BRIDGE ON SR 2849 OVER BACHELOR CREEK BETWEEN SR 2845 AND SR 2903

KCI ASSOCIATES OF NC, P.A.
9741 SOUTHERN PINE BLVD
SUITE J
CHARLOTTE, NC 28273
704-499-9452
NC LICENSE No. C-0764

NORTH CAROLINA PROFESSIONAL SEAL 032954 ENGINEER JARED C. MEDLIN
6-4-13

REVISIONS						SHEET NO.
NO.	BY:	DATE:	NO.	BY:	DATE:	S-1
1			3			SHEETS
2			4			24

DRAWN BY : D.J.DICK DATE : OCT. 2012
CHECKED BY : J.C.MEDLIN DATE : OCT. 2012

4/29/2013 Y:\Drawings\2011 DWGS\B11-10 NCDOT Division 8\T50220\Structures\FinalPlans\17BP.8.R.13_SD_GD_T50220.dgn
DJD

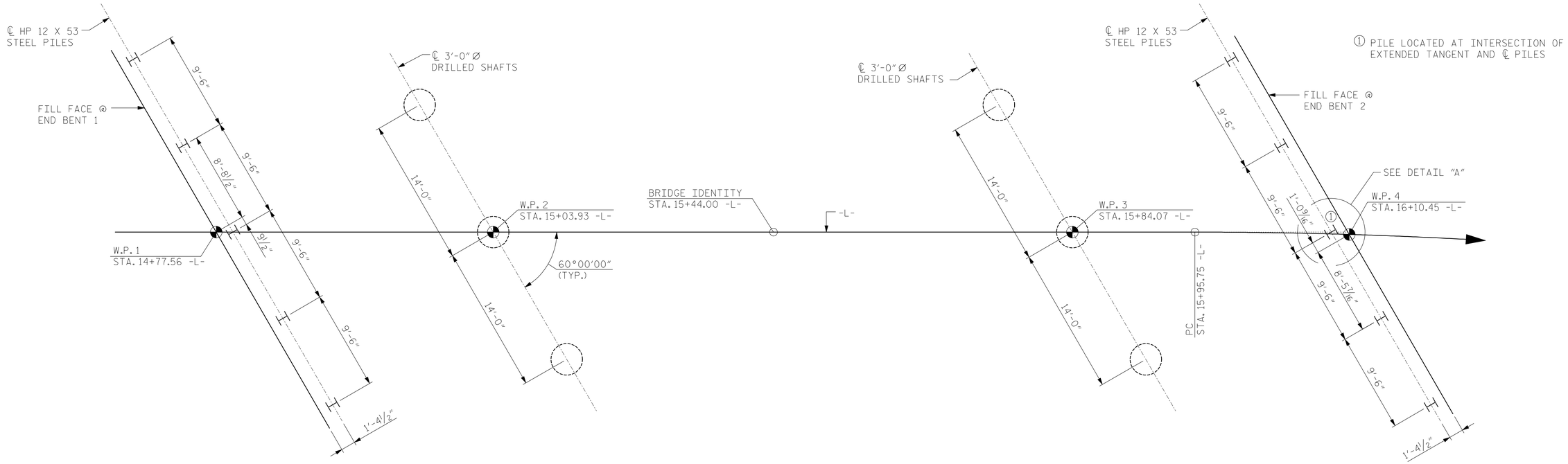

FOUNDATION LAYOUT

(DIMENSIONS LOCATING PILES ARE SHOWN TO CENTERLINE OF PILES)

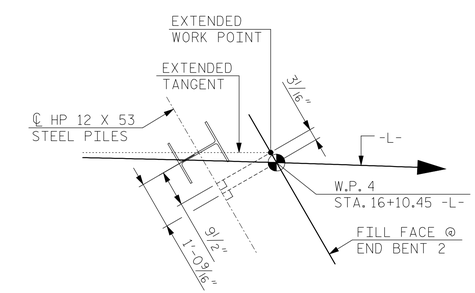

DETAIL "A"

FOUNDATION NOTES:

FOR PILES, SEE SECTION 450 OF THE STANDARD SPECIFICATIONS.

PILES AT END BENT NO.1 ARE DESIGNED FOR A FACTORED RESISTANCE OF 55 TONS PER PILE.

PILE EXCAVATION IS REQUIRED TO INSTALL PILES AT END BENT NO.1. EXCAVATE HOLES AT PILE LOCATIONS TO ELEVATION 524 FT. FOR PILE EXCAVATION, SEE SECTION 450 OF THE STANDARD SPECIFICATIONS.

CONCRETE OR GROUT IS REQUIRED TO FILL HOLES FOR PILE EXCAVATION AT END BENT NO.1.

PILES AT END BENT NO.2 ARE DESIGNED FOR A FACTORED RESISTANCE OF 55 TONS PER PILE.

PILE EXCAVATION IS REQUIRED TO INSTALL PILES AT END BENT NO.2. EXCAVATE HOLES AT PILE LOCATIONS TO ELEVATION 521 FT. FOR PILE EXCAVATION, SEE SECTION 450 OF THE STANDARD SPECIFICATIONS.

CONCRETE OR GROUT IS REQUIRED TO FILL HOLES FOR PILE EXCAVATION AT END BENT NO.2.

FOR DRILLED PIERS, SEE SECTION 411 OF THE STANDARD SPECIFICATIONS.

DRILLED PIERS AT BENT NO.1 ARE DESIGNED FOR A FACTORED RESISTANCE OF 340 TONS PER PIER. CHECK FIELD CONDITIONS FOR THE REQUIRED TIP RESISTANCE OF 30 TSF.

PERMANENT STEEL CASINGS MAY BE REQUIRED FOR DRILLED PIERS AT BENT NO.1. IF REQUIRED, DO NOT EXTEND PERMANENT CASINGS BELOW ELEVATION 525 FT WITHOUT PRIOR APPROVAL FROM THE ENGINEER. THE ENGINEER WILL DETERMINE THE NEED FOR PERMANENT CASINGS.

INSTALL DRILLED PIERS AT BENT NO.1 TO A TIP ELEVATION NO HIGHER THAN 519.1 FT (LEFT) AND 516.6 FT (RIGHT) AND WITH THE REQUIRED TIP RESISTANCE AND PENETRATION OF AT LEAST 6 FT INTO ROCK AS DEFINED BY ARTICLE 411-1 OF THE STANDARD SPECIFICATIONS.

THE SCOUR CRITICAL ELEVATION FOR BENT NO.1 IS ELEVATION 525.1 FT. SCOUR CRITICAL ELEVATIONS ARE USED TO MONITOR POSSIBLE SCOUR PROBLEMS DURNING THE LIFE OF THE STRUCTURE.

DO NOT USE SLURRY CONSTRUCTION FOR DRILLED PIERS AT BENT NO.1.

DRILLED PIERS AT BENT NO.2 ARE DESIGNED FOR A FACTORED RESISTANCE OF 340 TONS PER PIER. CHECK FIELD CONDITIONS FOR THE REQUIRED TIP RESISTANCE OF 30 TSF.

PERMANENT STEEL CASINGS MAY BE REQUIRED FOR DRILLED PIERS AT BENT NO.2. IF REQUIRED, DO NOT EXTEND PERMANENT CASINGS BELOW ELEVATION 526.8 FT WITHOUT PRIOR APPROVAL FROM THE ENGINEER. THE ENGINEER WILL DETERMINE THE NEED FOR PERMANENT CASINGS.

INSTALL DRILLED PIERS AT BENT NO.2 TO A TIP ELEVATION NO HIGHER THAN 520.8 FT (LEFT) AND 519.4 FT (RIGHT) AND WITH THE REQUIRED TIP RESISTANCE AND PENETRATION OF AT LEAST 6 FT INTO ROCK AS DEFINED BY ARTICLE 411-1 OF THE STANDARD SPECIFICATIONS.

THE SCOUR CRITICAL ELEVATION FOR BENT NO.2 IS ELEVATION 527.9 FT. SCOUR CRITICAL ELEVATIONS ARE USED TO MONITOR POSSIBLE SCOUR PROBLEMS DURNING THE LIFE OF THE STRUCTURE.

DO NOT USE SLURRY CONSTRUCTION FOR DRILLED PIERS AT BENT NO.2.

SID INSPECTIONS MAY BE REQUIRED FOR DRILLED PIERS. THE ENGINEER WILL DETERMINE THE NEED FOR SID INSPECTIONS. FOR SID INSPECTIONS, SEE SECTION 411 OF THE STANDARD SPECIFICATIONS.

CSL TUBES ARE REQUIRED AND CSL TESTING MAY BE REQUIRED FOR DRILLED PIERS. THE ENGINEER WILL DETERMINE THE NEED FOR CSL TESTING. FOR CSL TESTING, SEE SECTION 411 OF THE STANDARD SPECIFICATIONS.

PROJECT NO. 17BP.8.R.13
RANDOLPH COUNTY
STATION: 15+44.00 -L-

SHEET 2 OF 3

STATE OF NORTH CAROLINA
DEPARTMENT OF TRANSPORTATION
RALEIGH

GENERAL DRAWING

FOR BRIDGE ON SR 2849
OVER BACHELOR CREEK
BETWEEN SR 2845 AND SR 2903

KCI ASSOCIATES OF NC, P.A.
9741 SOUTHERN PINE BLVD
SUITE J
CHARLOTTE, NC 28273
704-499-9452
NC LICENSE No. C-0764

NORTH CAROLINA PROFESSIONAL SEAL 032954 ENGINEER JARED C. MEDLIN
6-4-13

REVISIONS						SHEET NO.
NO.	BY:	DATE:	NO.	BY:	DATE:	S-2
1			3			SHEETS
2			4			24

DRAWN BY : D.J.DICK DATE : OCT. 2012
CHECKED BY : J.C.MEDLIN DATE : OCT. 2012

DJD 6/6/2013 Y:\Drawings\2011 DWGS\B11-10 NCDOT Division 8\750220\Structures\FinalPlans\17BP.8.R.13_SD_FL_750220.dgn

TOTAL BILL OF MATERIAL

	REMOVAL OF EXISTING STRUCTURE @ STA. 15+44.00 -L-	3'-0" DIA. DRILLED PIERS IN SOIL	3'-0" DIA. DRILLED PIERS NOT IN SOIL	SID INSPECTIONS	CSL TESTING	UNCLASSIFIED STRUCTURE EXCAVATION	CLASS A CONCRETE	BRIDGE APPROACH SLABS	REINFORCING STEEL	SPIRAL COLUMN REINFORCING STEEL	HP12x53 STEEL PILES		PILE EXCAVATION IN SOIL	PILE EXCAVATION NOT IN SOIL	CONCRETE BARRIER RAIL	ELASTOMERIC BEARINGS	PLAIN RIP RAP CLASS II (2'-0" THICK)	GEOTEXTILE FOR DRAINAGE	3'-0" X 1'-9" PRESTRESSED CONCRETE CORED SLABS		3'-0" X 2'-9" PRESTRESSED BOX BEAMS	
	LUMP SUM	LIN.FT.	LIN.FT.	EACH	EACH	LUMP SUM	CU. YDS.	LUMP SUM	LBS.	LBS.	NO.	LIN.FT.	LIN.FT.	LIN.FT.	LIN.FT.	LUMP SUM	TONS	SQ. YDS.	NO.	LIN.FT.	NO.	LIN.FT.
SUPERSTRUCTURE								LUMP SUM							260.58	LUMP SUM			20	500	10	800
END BENT NO. 1							22.4		2736		5	50	35	15			87	97				
BENT NO. 1		11.4	22.0				17.4		6223	686												
BENT NO. 2		0	23.8				17.3		5519	513												
END BENT NO. 2							22.4		2736		5	50	20	30			88	97				
TOTAL	LUMP SUM	11.4	45.8	1	1	LUMP SUM	79.5	LUMP SUM	17,214	1,199	10	100	55	45	260.58	LUMP SUM	175	194	20	500	10	800

GENERAL NOTES:

ASSUMED LIVE LOAD = HL-93 OR ALTERNATE LOADING.

FOR OTHER DESIGN DATA AND GENERAL NOTES, SEE SHEET SN.

FOR EROSION CONTROL MEASURES SEE EROSION CONTROL PLANS.

THIS BRIDGE HAS BEEN DESIGNED IN ACCORDANCE WITH THE AASHTO LRFD BRIDGE DESIGN SPECIFICATIONS.

THIS BRIDGE IS LOCATED IN SEISMIC ZONE 1.

THE SUBSTRUCTURE OF THE EXISTING BRIDGE INDICATED ON THE PLANS IS FROM THE BEST INFORMATION AVAILABLE. SINCE THIS INFORMATION IS SHOWN FOR THE CONVENIENCE OF THE CONTRACTOR, THE CONTRACTOR SHALL HAVE NO CLAIM WHATSOEVER AGAINST THE DEPARTMENT OF TRANSPORTATION FOR ANY DELAYS OR ADDITIONAL COST INCURRED BASED ON DIFFERENCES BETWEEN THE EXISTING BRIDGE SUBSTRUCTURE SHOWN ON THE PLANS AND THE ACTUAL CONDITIONS AT THE PROJECT SITE.

ASPHALT WEARING SURFACE IS INCLUDED IN ROADWAY QUANTITY ON ROADWAY PLANS.

THIS STRUCTURE HAS BEEN DESIGNED IN ACCORDANCE WITH HEC 18, "EVALUATION SCOUR AT BRIDGES", MAY, 2001.

FOR SUBMITTAL OF WORKING DRAWINGS, SEE SPECIAL PROVISIONS.

FOR FALSEWORK AND FORMWORK, SEE SPECIAL PROVISIONS.

FOR CRANE SAFETY, SEE SPECIAL PROVISIONS.

FOR GROUT FOR STRUCTURES, SEE SPECIAL PROVISIONS.

INASMUCH AS THE PAINT SYSTEM ON THE EXISTING STRUCTURAL STEEL CONTAINS LEAD, THE CONTRACTOR'S ATTENSION IS DIRECTED TO ARTICLE 107-1 OF THE STANDARD SPECIFICATIONS. ANY COSTS RESULTING FROM COMPLIANCE WITH APPLICABLE STATE OR FEDERAL REGULATIONS PERTAINING TO HANDLING OF MATERIALS CONTAINING LEAD BASED PAINT SHALL BE INCLUDED IN THE BID PRICE FOR "REMOVAL OF EXISTING STRUCTURE AT STATION 15+44.00 -L-."

THE MATERIAL SHOWN IN THE CROSS-HATCHED AREA SHALL BE EXCAVATED FOR A DISTANCE OF 30 FT LEFT AND 45 FT RIGHT OF CENTERLINE ROADWAY AS DIRECTED BY THE ENGINEER. THIS WORK WILL BE PAID FOR AT THE CONTRACT LUMP SUM PRICE FOR UNCLASSIFIED STRUCTURE EXCAVATION. SEE SECTION 412 OF THE STANDARD SPECIFICATIONS.

THE EXISTING BRIDGE CONSISTING OF ONE SPAN @ 40'-6" WITH A TIMBER FLOOR ON STEEL I-BEAMS SUPERSTRUCTURE WITH A CLEAR ROADWAY WIDTH OF 24'-3" ON A SUBSTRUCTURE CONSISTING OF TIMBER CAPS ON TIMBER PILES AND LOCATED AT THE PROPOSED STRUCTURE SHALL B EREMOVED.

REMOVAL OF THE EXISTING BRIDGE SHALL BE PERFORMED SO AS NO TO ALLOW DEBRIS TO FALL INTO THE WATER. THE CONTRCATOR SHALL REMOVE THE BRIDGE AND SUBMIT PLANS FOR DEMOLITION IN ACCORDANCE WITH ARTICLE 402-2 OF THE STANDARD SPECIFICATIONS.

TEMP. BENCHMARK: R/R SPIKE IN 12" MAPLE TREE, STA. 13+53.39, OFFSET 40.92' RT, ELE. 542.27

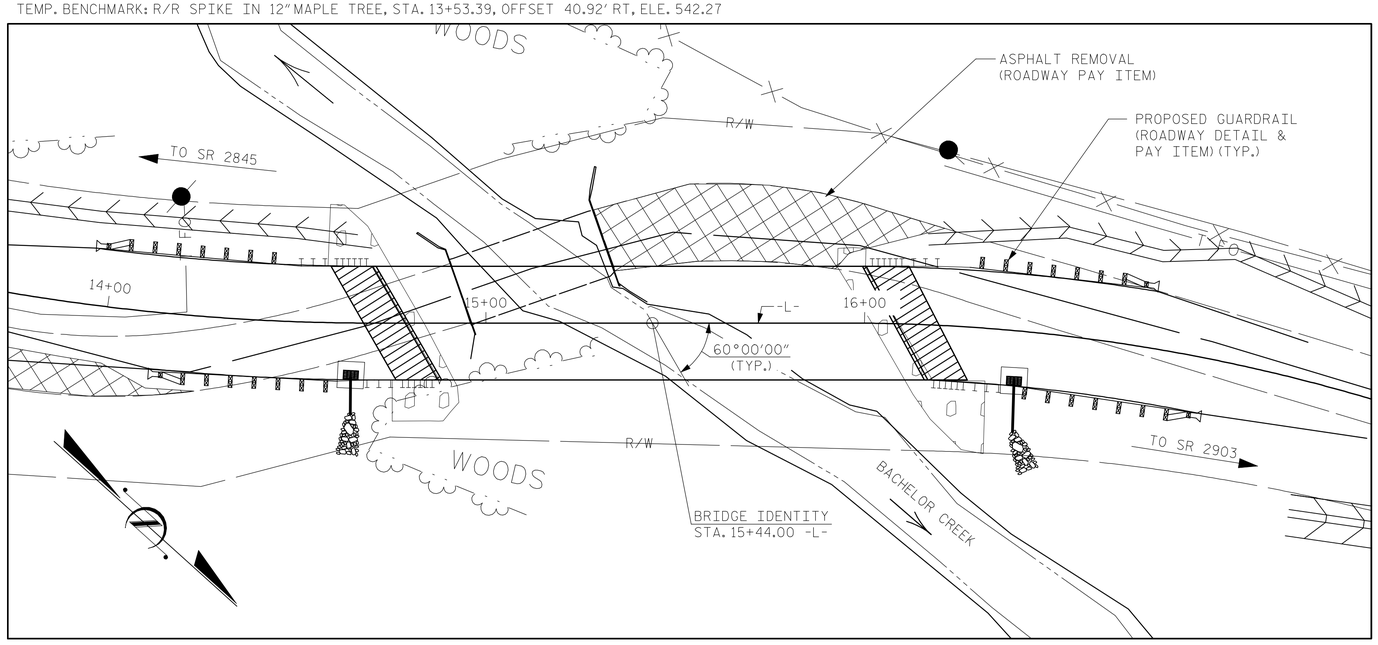

LOCATION SKETCH

NOTE: FOR UTILITY INFORMATION, SEE UTILITY PLANS AND SPECIAL PROVISIONS.

HYDRAULIC DATA

DESIGN DISCHARGE	= 460 CFS
FREQUENCY	= 2 YRS
DESIGN HIGH WATER	= 532.8
DRAINAGE AREA	= 5.7 SQ.MI.
BASE DISCHARGE (Q100)	= 2,201 CFS
BASE HIGH WATER ELEVATION	= 536.37

OVERTOPPING FLOOD DATA

OVERTOPPING DISCHARGE	= 950 CFS
FREQUENCY OF OVERTOPPING FLOOD	= 5+ YRS
OVERTOPPING FLOOD ELEVATION	= 534.5

PROJECT NO. 17BP.8.R.13

RANDOLPH COUNTY

STATION: 15+44.00 -L-

SHEET 3 OF 3

STATE OF NORTH CAROLINA
DEPARTMENT OF TRANSPORTATION
RALEIGH

GENERAL DRAWING
FOR BRIDGE ON SR 2849
OVER BACHELOR CREEK
BETWEEN SR 2845 AND SR 2903

KCI ASSOCIATES OF NC, P.A.
9741 SOUTHERN PINE BLVD
SUITE J
CHARLOTTE, NC 28273
704-499-9452
NC LICENSE No. C-0764

NORTH CAROLINA PROFESSIONAL SEAL 032954 ENGINEER JARED C. MEDLIN
6-4-13

REVISIONS						SHEET NO.
NO.	BY:	DATE:	NO.	BY:	DATE:	S-3
1			3			SHEETS
2			4			24

DRAWN BY : D.J.DICK DATE : OCT. 2012
CHECKED BY : J.C.MEDLIN DATE : OCT. 2012

4/29/2013 Y:\Drawings\2011 DWGS\B11-10 NCDOT Division 8\750220\Structures\FinalPlans\17BP.8.R.13_SD_LOC_750220.dgn
DJD

LOAD AND RESISTANCE FACTOR RATING (LRFD) SUMMARY FOR PRESTRESSED CONCRETE GIRDERS

LEVEL		VEHICLE	WEIGHT (W) (TONS)	CONTROLLING LOAD RATING	MINIMUM RATING FACTORS (RF)	TONS = W X RF	STRENGTH I LIMIT STATE											SERVICE III LIMIT STATE						COMMENT NUMBER
								MOMENT					SHEAR						MOMENT					
							LIVELOAD FACTORS	DISTRIBUTION FACTORS (DF)	RATING FACTOR	SPAN	GIRDER LOCATION	DISTANCE FROM LEFT END OF SPAN (ft)	DISTRIBUTION FACTORS (DF)	RATING FACTOR	SPAN	GIRDER LOCATION	DISTANCE FROM LEFT END OF SPAN (ft)	LIVELOAD FACTORS	DISTRIBUTION FACTORS (DF)	RATING FACTOR	SPAN	GIRDER LOCATION	DISTANCE FROM LEFT END OF SPAN (ft)	
DESIGN LOAD RATING		HL-93(Inv)	N/A	1	1.208	--	1.75	0.257	2.83	25'	EL	11.923	0.659	1.21	25'	EL	1.192	0.80	0.257	2.60	25'	EL	11.923	
		HL-93(Opr)	N/A	--	1.565	--	1.35	0.257	3.66	25'	EL	11.923	0.659	1.57	25'	EL	1.192	N/A	--	--	--	--	--	
		HS-20(Inv)	36.000	2	1.402	50.457	1.75	0.257	4.17	25'	EL	11.923	0.659	1.4	25'	EL	1.192	0.80	0.257	3.85	25'	EL	11.923	
		HS-20(Opr)	36.000	--	1.817	65.407	1.35	0.257	5.41	25'	EL	11.923	0.659	1.82	25'	EL	1.192	N/A	--	--	--	--	--	
LEGAL LOAD RATING	SV	SNSH	13.500	--	3.24	43.746	1.4	0.257	7.59	25'	EL	11.923	0.659	3.24	25'	EL	1.192	0.80	0.257	5.59	25'	EL	11.923	
		SNGARBS2	20.000	--	2.6	51.994	1.4	0.257	7.1	25'	EL	11.923	0.659	2.6	25'	EL	1.192	0.80	0.257	5.24	25'	EL	11.923	
		SNAGRIS2	22.000	--	2.548	56.063	1.4	0.257	7.59	25'	EL	11.923	0.659	2.55	25'	EL	1.192	0.80	0.257	5.59	25'	EL	11.923	
		SNCOTTS3	27.250	--	1.645	44.82	1.4	0.257	3.98	25'	EL	11.923	0.659	1.64	25'	EL	1.192	0.80	0.257	2.93	25'	EL	11.923	
		SNAGGRS4	34.925	--	1.585	55.347	1.4	0.257	3.96	25'	EL	11.923	0.659	1.58	25'	EL	1.192	0.80	0.257	2.92	25'	EL	11.923	
		SNS5A	35.550	--	1.655	58.841	1.4	0.257	3.85	25'	EL	11.923	0.659	1.66	25'	EL	1.192	0.80	0.257	2.82	25'	EL	11.923	
		SNS6A	39.950	--	1.588	63.45	1.4	0.257	3.6	25'	EL	11.923	0.659	1.59	25'	EL	1.192	0.80	0.257	2.66	25'	EL	11.923	
		SNS7B	42.000	--	1.599	67.158	1.4	0.257	3.6	25'	EL	11.923	0.659	1.6	25'	EL	1.192	0.80	0.257	2.64	25'	EL	11.923	
	TTST	TNAGRIT3	33.000	--	1.948	64.275	1.4	0.257	5.09	25'	EL	11.923	0.659	1.95	25'	EL	1.192	0.80	0.257	3.75	25'	EL	11.923	
		TNT4A	33.075	--	1.764	58.347	1.4	0.257	4.4	25'	EL	11.923	0.659	1.76	25'	EL	1.192	0.80	0.257	3.25	25'	EL	11.923	
		TNT6A	41.600	--	1.662	69.142	1.4	0.257	4.13	25'	EL	11.923	0.659	1.66	25'	EL	1.192	0.80	0.257	3.05	25'	EL	11.923	
		TNT7A	42.000	--	1.657	69.603	1.4	0.257	4.28	25'	EL	11.923	0.659	1.66	25'	EL	1.192	0.80	0.257	3.15	25'	EL	11.923	
		TNT7B	42.000	--	1.598	67.097	1.4	0.257	3.85	25'	EL	11.923	0.659	1.6	25'	EL	1.192	0.80	0.257	2.84	25'	EL	11.923	
		TNAGRIT4	43.000	--	1.595	68.603	1.4	0.257	4.14	25'	EL	11.923	0.659	1.6	25'	EL	1.192	0.80	0.257	3.04	25'	EL	11.923	
		TNAGT5A	45.000	--	1.625	73.143	1.4	0.257	4.14	25'	EL	11.923	0.659	1.63	25'	EL	1.192	0.80	0.257	3.04	25'	EL	11.923	
		TNAGT5B	45.000	3	1.476	66.434	1.4	0.257	4.08	25'	EL	9.538	0.659	1.48	25'	EL	1.192	0.80	0.257	3.02	25'	EL	9.538	

LOAD FACTORS:

DESIGN LOAD RATING FACTORS	LIMIT STATE	γ_{DC}	γ_{DW}
	STRENGTH I	1.25	1.50
	SERVICE III	1.00	1.00

NOTES:

MINIMUM RATING FACTORS ARE BASED ON THE STRENGTH I AND SERVICE III LIMIT STATES.

ALLOWABLE STRESSES FOR SERVICE III LIMIT STATE ARE AS REQUIRED FOR DESIGN.

COMMENTS:

1.
2.
3.
4.

(#) CONTROLLING LOAD RATING
(1) DESIGN LOAD RATING (HL-93)
(2) DESIGN LOAD RATING (HS-20)
(3) LEGAL LOAD RATING **
** SEE CHART FOR VEHICLE TYPE

GIRDER LOCATION
I - INTERIOR GIRDER
EL - EXTERIOR LEFT GIRDER
ER - EXTERIOR RIGHT GIRDER

LRFR SUMMARY

FOR SPAN 'A' & 'C'

PROJECT NO. 17BP.8.R.13

RANDOLPH COUNTY

STATION: 15+44.00 -L-

SHEET 1 OF 2

STATE OF NORTH CAROLINA
DEPARTMENT OF TRANSPORTATION
RALEIGH

STANDARD

LRFR SUMMARY FOR 25' CORED SLAB UNIT 60° SKEW

(NON-INTERSTATE TRAFFIC)

REVISIONS						SHEET NO.
NO.	BY:	DATE:	NO.	BY:	DATE:	S-4
1			3			TOTAL SHEETS
2			4			24

KCI ASSOCIATES OF NC, P.A.
9741 SOUTHERN PINE BLVD
SUITE J
CHARLOTTE, NC 28273
704-499-9452
NC LICENSE No. C-0764

NORTH CAROLINA PROFESSIONAL SEAL 032954 ENGINEER JARED C. MEDLIN
6-4-13

ASSEMBLED BY :	JCM	DATE :	9/12
CHECKED BY :	JDF	DATE :	9/12
DRAWN BY :	CVC 6/10		
CHECKED BY :	DNS 6/10		

STD. NO. 21LRFR1_60&120S_25L

LOAD AND RESISTANCE FACTOR RATING (LRFD) SUMMARY FOR PRESTRESSED CONCRETE GIRDERS

LEVEL		VEHICLE	WEIGHT (W) (TONS)	CONTROLLING LOAD RATING	MINIMUM RATING FACTORS (RF)	TONS = W X RF	STRENGTH I LIMIT STATE											SERVICE III LIMIT STATE						COMMENT NUMBER
								MOMENT					SHEAR						MOMENT					
							LIVELOAD FACTORS	DISTRIBUTION FACTORS (DF)	RATING FACTOR	SPAN	GIRDER LOCATION	DISTANCE FROM LEFT END OF SPAN (ft)	DISTRIBUTION FACTORS (DF)	RATING FACTOR	SPAN	GIRDER LOCATION	DISTANCE FROM LEFT END OF SPAN (ft)	LIVELOAD FACTORS	DISTRIBUTION FACTORS (DF)	RATING FACTOR	SPAN	GIRDER LOCATION	DISTANCE FROM LEFT END OF SPAN (ft)	
DESIGN LOAD RATING		HL-93(Inv)	N/A	1	1.162	--	1.75	0.247	1.91	A	EL	39.134	0.623	1.16	A	EL	7.827	0.80	0.247	1.29	A	EL	39.134	
		HL-93(Opr)	N/A	--	1.507	--	1.35	0.247	2.48	A	EL	39.134	0.623	1.51	A	EL	7.827	N/A	--	--	--	--	--	
		HS-20(Inv)	36.000	2	1.469	52.874	1.75	0.247	2.53	A	EL	39.134	0.623	1.47	A	EL	7.827	0.80	0.247	1.71	A	EL	39.134	
		HS-20(Opr)	36.000	--	1.904	68.541	1.35	0.247	3.29	A	EL	39.134	0.623	1.9	A	EL	7.827	N/A	--	--	--	--	--	
LEGAL LOAD RATING	SV	SNSH	13.500	--	3.905	52.721	1.4	0.247	7.25	A	EL	39.134	0.623	4.41	A	EL	7.827	0.80	0.247	3.91	A	EL	39.134	
		SNGARBS2	20.000	--	2.888	57.75	1.4	0.247	5.36	A	EL	39.134	0.623	3.12	A	EL	7.827	0.80	0.247	2.89	A	EL	39.134	
		SNAGRIS2	22.000	--	2.725	59.952	1.4	0.247	5.06	A	EL	39.134	0.623	2.89	A	EL	7.827	0.80	0.247	2.73	A	EL	39.134	
		SNCOTTS3	27.250	--	1.943	52.939	1.4	0.247	3.61	A	EL	39.134	0.623	2.2	A	EL	7.827	0.80	0.247	1.94	A	EL	39.134	
		SNAGGRS4	34.925	--	1.615	56.395	1.4	0.247	3	A	EL	39.134	0.623	1.82	A	EL	7.827	0.80	0.247	1.61	A	EL	39.134	
		SNS5A	35.550	--	1.58	56.157	1.4	0.247	2.93	A	EL	39.134	0.623	1.84	A	EL	7.827	0.80	0.247	1.58	A	EL	39.134	
		SNS6A	39.950	--	1.446	57.756	1.4	0.247	2.68	A	EL	39.134	0.623	1.67	A	EL	7.827	0.80	0.247	1.45	A	EL	39.134	
		SNS7B	42.000	--	1.377	57.818	1.4	0.247	2.56	A	EL	39.134	0.623	1.64	A	EL	7.827	0.80	0.247	1.38	A	EL	39.134	
	TTST	TNAGRIT3	33.000	--	1.762	58.142	1.4	0.247	3.27	A	EL	39.134	0.623	1.99	A	EL	7.827	0.80	0.247	1.76	A	EL	39.134	
		TNT4A	33.075	--	1.769	58.499	1.4	0.247	3.28	A	EL	39.134	0.623	1.95	A	EL	7.827	0.80	0.247	1.77	A	EL	39.134	
		TNT6A	41.600	--	1.443	60.014	1.4	0.247	2.68	A	EL	39.134	0.623	1.74	A	EL	7.827	0.80	0.247	1.44	A	EL	39.134	
		TNT7A	42.000	--	1.448	60.817	1.4	0.247	2.69	A	EL	39.134	0.623	1.7	A	EL	7.827	0.80	0.247	1.45	A	EL	39.134	
		TNT7B	42.000	--	1.493	62.726	1.4	0.247	2.77	A	EL	39.134	0.623	1.6	A	EL	7.827	0.80	0.247	1.49	A	EL	39.134	
		TNAGRIT4	43.000	--	1.424	61.237	1.4	0.247	2.64	A	EL	39.134	0.623	1.55	A	EL	7.827	0.80	0.247	1.42	A	EL	39.134	
		TNAGT5A	45.000	--	1.344	60.496	1.4	0.247	2.5	A	EL	39.134	0.623	1.54	A	EL	7.827	0.80	0.247	1.34	A	EL	39.134	
		TNAGT5B	45.000	3	1.33	59.828	1.4	0.247	2.47	A	EL	39.134	0.623	1.48	A	EL	7.827	0.80	0.247	1.33	A	EL	39.134	

LOAD FACTORS:

DESIGN LOAD RATING FACTORS	LIMIT STATE	γ_{DC}	γ_{DW}
	STRENGTH I	1.25	1.50
	SERVICE III	1.00	1.00

NOTES:

MINIMUM RATING FACTORS ARE BASED ON THE STRENGTH I AND SERVICE III LIMIT STATES.

ALLOWABLE STRESSES FOR SERVICE III LIMIT STATE ARE AS REQUIRED FOR DESIGN.

COMMENTS:

1.
2.
3.
4.

CONTROLLING LOAD RATING
1 DESIGN LOAD RATING (HL-93)
2 DESIGN LOAD RATING (HS-20)
3 LEGAL LOAD RATING **
** SEE CHART FOR VEHICLE TYPE

GIRDER LOCATION
I - INTERIOR GIRDER
EL - EXTERIOR LEFT GIRDER
ER - EXTERIOR RIGHT GIRDER

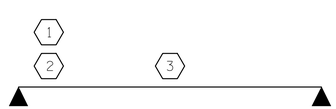

LRFR SUMMARY

FOR SPAN 'B'

PROJECT NO. 17BP.8.R.13

RANDOLPH COUNTY

STATION: 15+44.00 -L-

SHEET 2 OF 2

STATE OF NORTH CAROLINA
DEPARTMENT OF TRANSPORTATION
RALEIGH

STANDARD

LRFR SUMMARY FOR 80' BOX BEAM UNIT 60° SKEW

(NON-INTERSTATE TRAFFIC)

REVISIONS						SHEET NO.
NO.	BY:	DATE:	NO.	BY:	DATE:	S-5
1			3			TOTAL SHEETS
2			4			24

KCI ASSOCIATES OF NC, P.A.
9741 SOUTHERN PINE BLVD
SUITE J
CHARLOTTE, NC 28273
704-499-9452
NC LICENSE No. C-0764

NORTH CAROLINA PROFESSIONAL SEAL 032954 ENGINEER JARED C. MEDLIN
6-4-13

ASSEMBLED BY :	DJD	DATE :	08/12
CHECKED BY :	JCM	DATE :	08/12
DRAWN BY :	CVC 6/10		
CHECKED BY :	DNS 6/10		

STD. NO. 33LRFR1_60&120S_80L

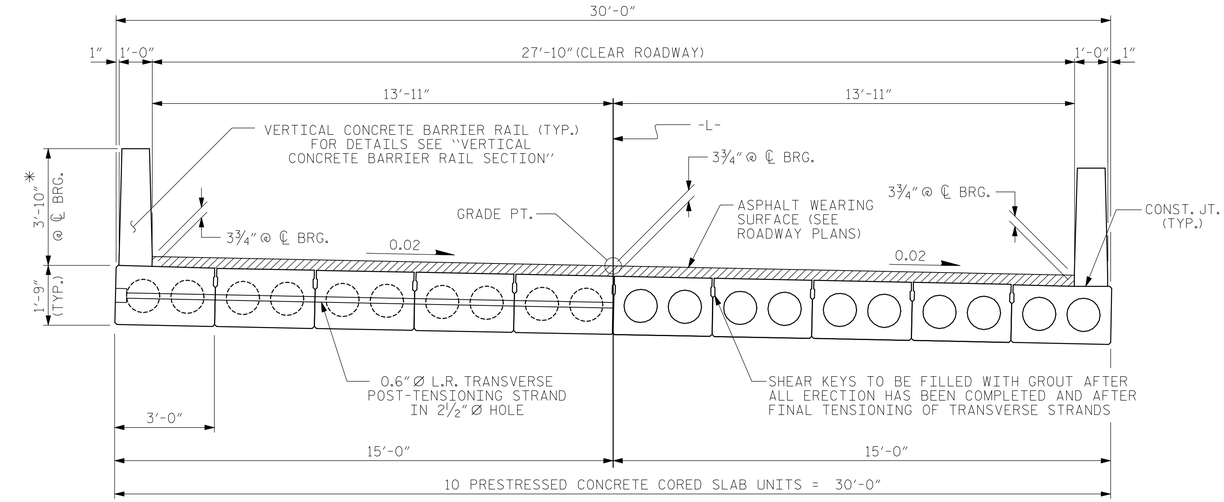

HALF SECTION
AT INTERMEDIATE DIAPHRAGMS

HALF SECTION
THROUGH VOIDS

TYPICAL SECTION

* - THE MAXIMUM BARRIER RAIL HEIGHT AND ASPHALT THICKNESS IS SHOWN. THE HEIGHT OF THE BARRIER RAIL AND ASPHALT THICKNESS VARIES WHILE THE TOP OF THE BARRIER RAIL FOLLOWS THE PROFILE OF THE GUTTERLINE. FOR RAIL HEIGHT DETAILS AND ASPHALT THICKNESS SEE THE "VERTICAL CONCRETE BARRIER RAIL SECTION" DETAIL.

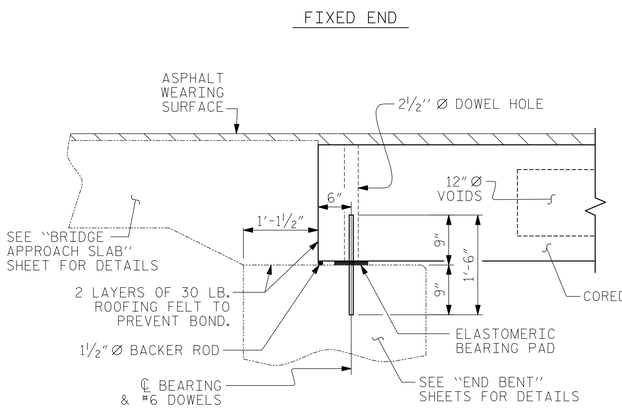

SECTION AT END BENT No.1

(END BENT 2 SIMILAR BY ROTATION)

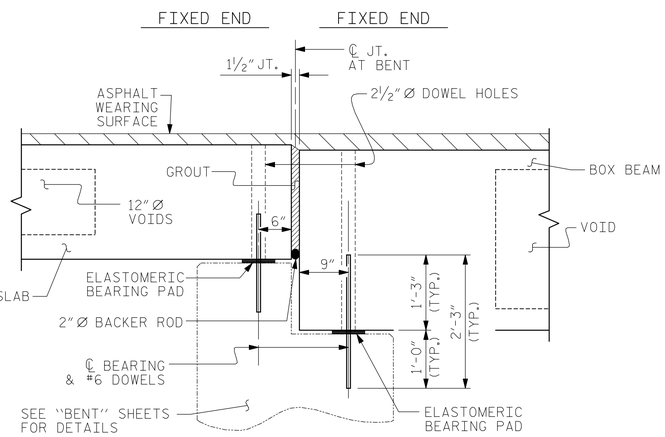

SECTION AT BENT No.1

(BENT 2 SIMILAR BY ROTATION)

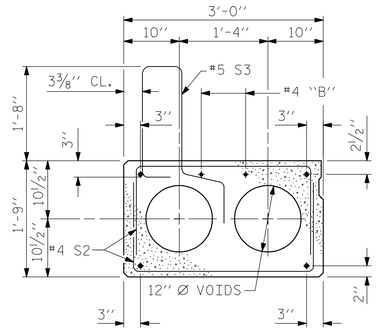

EXT. SLAB SECTION

(FOR PRESTRESSED STRAND LAYOUT, SEE INTERIOR SLAB SECTION.)

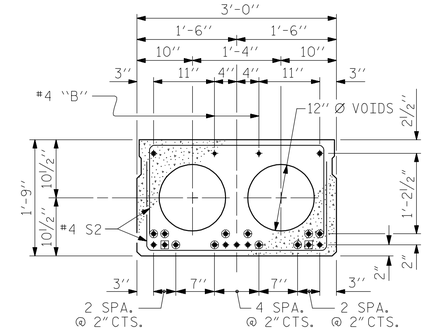

INTERIOR SLAB SECTION (25' UNIT)

(9 STRANDS REQUIRED)

0.6" Ø LOW RELAXATION STRAND LAYOUT

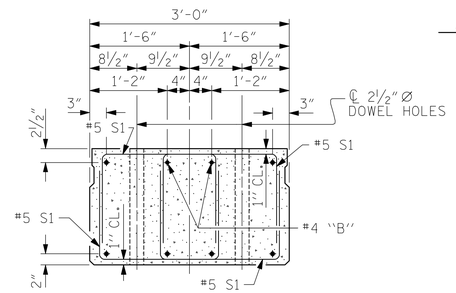

END ELEVATION

SHOWING PLACEMENT OF DOUBLE STIRRUPS AND LOCATION OF DOWEL HOLES. (STRAND LAYOUT NOT SHOWN.) INTERIOR SLAB UNIT SHOWN-EXTERIOR SLAB UNIT SIMILAR EXCEPT SHEAR KEY LOCATION.

◉ BOND SHALL BE BROKEN ON THESE STRANDS FOR A DISTANCE OF 2'-0" FROM END OF CORED SLAB UNIT. SEE STANDARD SPECIFICATIONS, ARTICLE 1078-7.

◉ OPTIONAL FULL LENGTH DEBONDED STRANDS. THESE STRANDS ARE NOT REQUIRED. IF THE FABRICATOR CHOOSES TO INCLUDE THESE STRANDS IN THE CORED SLAB UNIT, THE STRANDS SHALL BE DEBONDED FOR THE FULL LENGTH OF THE UNIT AT NO ADDITIONAL COST. SEE STANDARD SPECIFICATIONS, ARTICLE 1078-7.

DEBONDING LEGEND

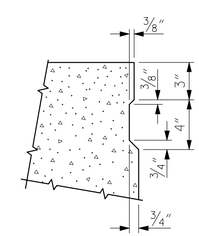

SHEAR KEY DETAIL

NOTE: OMIT SHEAR KEY ON OUTSIDE FACE OF EXTERIOR CORED SLABS.

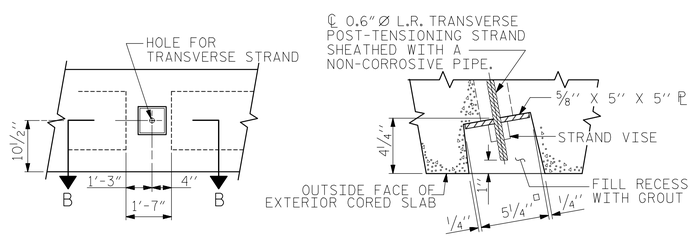

ELEVATION VIEW

SECTION B-B

GROUTED RECESS AT END OF POST-TENSIONED STRAND OF CORED SLABS

PROJECT NO. 17BP.8.R.13
RANDOLPH COUNTY
STATION: 15+44.00 -L-

STATE OF NORTH CAROLINA
DEPARTMENT OF TRANSPORTATION
RALEIGH

3'-0" X 1'-9"
PRESTRESSED CONCRETE
CORED SLAB UNIT
SPANS A & C
60° SKEW

KCI ASSOCIATES OF NC, P.A.
9741 SOUTHERN PINE BLVD
SUITE J
CHARLOTTE, NC 28273
704-499-9452
NC LICENSE No. C-0764

NORTH CAROLINA PROFESSIONAL SEAL 032954 ENGINEER JARED C. MEDLIN
6-4-13

REVISIONS						SHEET NO.
NO.	BY:	DATE:	NO.	BY:	DATE:	S-6
1			3			TOTAL SHEETS
2			4			24

ASSEMBLED BY :	JCM	DATE :	09/12
CHECKED BY :	JDF	DATE :	09/12
DRAWN BY :	DGE 5/09	REV. 12/11	MAA/AAC
CHECKED BY :	BCH 6/09		

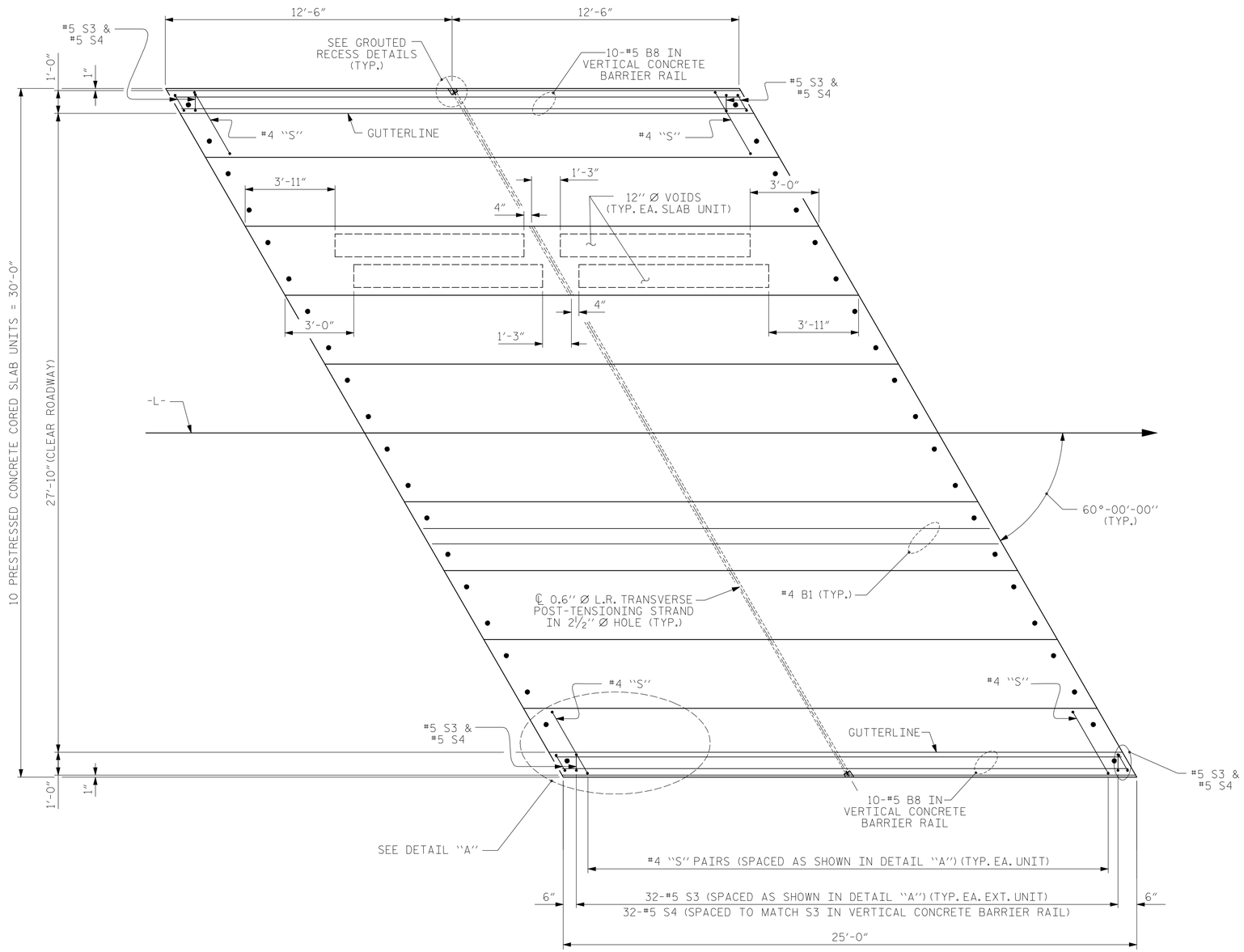

PLAN OF UNIT

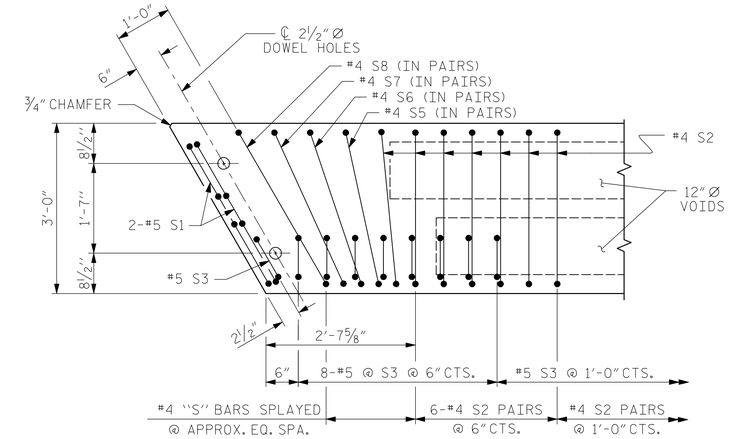

DETAIL "A"

NOTE: EXTERIOR UNIT SHOWN - INTERIOR UNIT SIMILAR EXCEPT OMIT #5 S3 BARS.

PROJECT NO. 17BP.8.R.13

RANDOLPH COUNTY

STATION: 15+44.00 -L-

STATE OF NORTH CAROLINA
DEPARTMENT OF TRANSPORTATION
RALEIGH

PLAN OF 25' UNIT
27'-10" CLEAR ROADWAY
SPANS A & C
60° SKEW

ASSEMBLED BY : JCM		DATE : 09/12	
CHECKED BY : JDF		DATE : 09/12	
DRAWN BY : DGE 3/09	REV. 12/5/11 MAA/AAC		
CHECKED BY : BCH 3/09			

KCI ASSOCIATES OF NC, P.A.
9741 SOUTHERN PINE BLVD
SUITE J
CHARLOTTE, NC 28273
704-499-9452
NC LICENSE No. C-0764

NORTH CAROLINA PROFESSIONAL SEAL 032954 ENGINEER JARED C. MEDLIN
6-4-13

REVISIONS							
NO.	BY:	DATE:	NO.	BY:	DATE:	SHEET NO.	S-7
1			3			TOTAL SHEETS	24
2			4				

STD.NO. 21" PCS_30_60S_25L

GUTTERLINE ASPHALT THICKNESS & RAIL HEIGHT		
27'-10" CLEAR ROADWAY	ASPHALT OVERLAY THICKNESS	RAIL HEIGHT
	@ MID-SPAN	@ MID-SPAN
	SUPERED SECTION	
25' UNITS	3⅜"	3'-9⅝"

GRADE 270 STRANDS	
	0.6" Ø L.R.
AREA (SQUARE INCHES)	0.217
ULTIMATE STRENGTH (LBS. PER STRAND)	58,600
APPLIED PRESTRESS (LBS. PER STRAND)	43,950

CORED SLABS REQUIRED			
	NUMBER	LENGTH	TOTAL LENGTH
25' UNIT			
EXTERIOR C.S.	4	25'-0"	100'-0"
INTERIOR C.S.	16	25'-0"	400'-0"
TOTAL	20		500'-0"

CONCRETE RELEASE STRENGTH	
UNIT	PSI
25'	4000

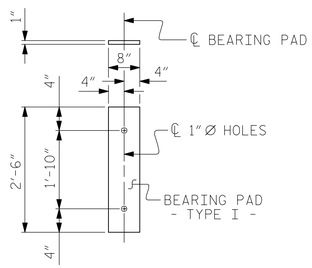

FIXED END
(TYPE I - 40 REQ'D)

ELASTOMERIC BEARING DETAILS

ELASTOMER IN ALL BEARINGS SHALL BE 50 DUROMETER HARDNESS.

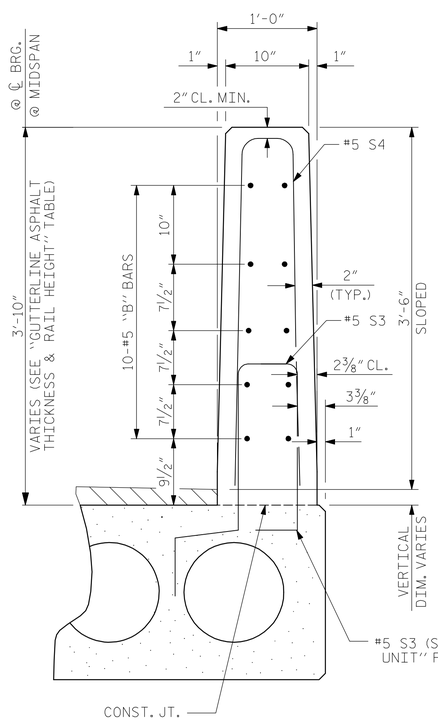

VERTICAL CONCRETE BARRIER RAIL SECTION

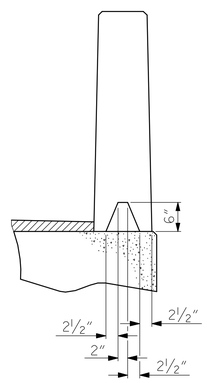

SECTION S-S
AT DAM IN OPEN JOINT
(THIS IS TO BE USED ONLY WHEN SLIP FORM IS USED)

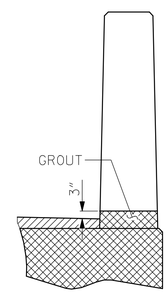

SECTION T-T
AT OPEN JOINT AT BENT
(THIS IS TO BE USED WHERE FOAM JOINT IS NOT USED)

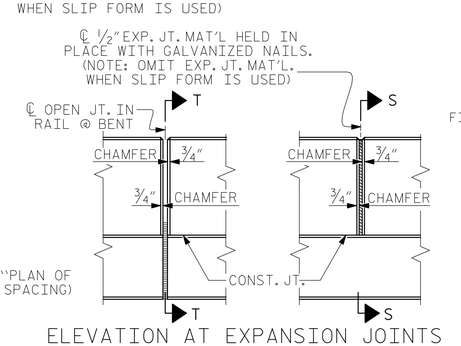

ELEVATION AT EXPANSION JOINTS

BAR TYPES

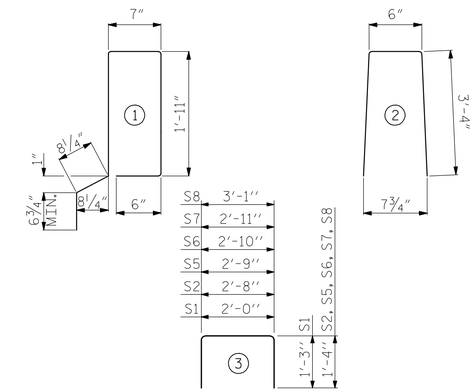

ALL BAR DIMENSIONS ARE OUT TO OUT

BILL OF MATERIAL FOR ONE 25' CORED SLAB UNIT

				EXTERIOR UNIT		INTERIOR UNIT	
BAR	NUMBER	SIZE	TYPE	LENGTH	WEIGHT	LENGTH	WEIGHT
B1	2	#4	STR	24'-7"	33	24'-7"	33
S1	8	#5	3	4'-6"	38	4'-6"	38
S2	52	#4	3	5'-4"	185	5'-4"	185
✳ S3	34	#5	1	6'-2"	219		
S5	4	#4	3	5'-5"	14	5'-5"	14
S6	4	#4	3	5'-6"	15	5'-6"	15
S7	4	#4	3	5'-7"	15	5'-7"	15
S8	4	#4	3	5'-9"	15	5'-9"	15
REINFORCING STEEL			LBS.		315		315
✳ EPOXY COATED REINFORCING STEEL			LBS.		219		
5000 P.S.I. CONCRETE			CU. YDS.		3.8		3.8
0.6" Ø L.R. STRANDS			No.		9		9

NOTES

ALL PRESTRESSING STRANDS SHALL BE 7-WIRE LOW RELAXATION GRADE 270 STRANDS AND SHALL CONFORM TO AASHTO M203 EXCEPT FOR SAMPLING REQUIREMENTS WHICH SHALL BE IN ACCORDANCE WITH THE STANDARD SPECIFICATIONS.

ALL REINFORCING STEEL CAST WITH THE CORED SLAB SECTIONS SHALL BE GRADE 60 AND SHALL BE INCLUDED IN THE UNIT PRICE BID FOR PRESTRESSED CONCRETE CORED SLABS.

RECESSES FOR TRANSVERSE STRANDS SHALL BE GROUTED AFTER THE TENSIONING OF THE STRANDS.

THE 2½" Ø DOWEL HOLES AT FIXED ENDS OF SLAB SECTIONS SHALL BE FILLED WITH NON-SHRINK GROUT.

THE BACKER RODS SHALL CONFORM TO THE REQUIREMENTS OF TYPE M BOND BREAKER. SEE SECTION 1028 OF THE STANDARD SPECIFICATIONS.

WHEN CORED SLABS ARE CAST, AN INTERNAL HOLD-DOWN SYSTEM SHALL BE EMPLOYED TO PREVENT VOIDS FROM RISING OR MOVING SIDEWAYS. AT LEAST SIX WEEKS PRIOR TO CASTING CORED SLABS, THE CONTRACTOR SHALL SUBMIT TO THE ENGINEER FOR REVIEW AND COMMENT, DETAILED DRAWINGS OF THE PROPOSED HOLD-DOWN SYSTEM. IN ADDITION TO STRUCTURAL DETAILS, LOCATION AND SPACING OF THE HOLD-DOWNS SHALL BE INDICATED.

ALL REINFORCING STEEL IN THE VERTICAL CONCRETE BARRIER RAIL SHALL BE EPOXY COATED.

PRESTRESSING STRANDS SHALL BE CUT FLUSH WITH THE CORED SLAB UNIT ENDS.

APPLY EPOXY PROTECTIVE COATING TO CORED SLAB UNIT ENDS.

GROOVED CONTRACTION JOINTS, ½" IN DEPTH, SHALL BE TOOLED IN ALL EXPOSED FACES OF THE BARRIER RAIL AND IN ACCORDANCE WITH ARTICLE 825-10(B) OF THE STANDARD SPECIFICATIONS. A CONTRACTION JOINT SHALL BE LOCATED AT EACH THIRD POINT BETWEEN BARRIER RAIL EXPANSION JOINTS. ONLY ONE CONTRACTION JOINT IS REQUIRED AT MIDPOINT OF BARRIER RAIL SEGMENTS LESS THAN 20 FEET IN LENGTH AND NO CONTRACTION JOINTS ARE REQUIRED FOR THOSE SEGMENTS LESS THAN 10 FEET IN LENGTH.

TRANSVERSE POST TENSIONING OF THE CORED SLAB UNITS SHALL BE DONE IN ACCORDANCE WITH THE STANDARD SPECIFICATIONS.

THE TRANSFER OF LOAD FROM THE ANCHORAGES TO THE CORED SLAB UNIT SHALL BE DONE WHEN THE CONCRETE HAS REACHED A COMPRESSIVE STRENGTH OF NOT LESS THAN THE REQUIRED STRENGTH SHOWN IN THE "CONCRETE RELEASE STRENGTH" TABLE.

FOR GROUT FOR STRUCTURES, SEE SPECIAL PROVISIONS.

BILL OF MATERIAL FOR VERTICAL CONCRETE BARRIER RAIL

BAR	BARS PER PAIR OF EXTERIOR UNITS	TOTAL NO.	SIZE	TYPE	LENGTH	WEIGHT
	25' UNIT					
✳ B8	20	40	#5	STR	24'-6"	1022
✳ S4	68	136	#5	2	7'-2"	1016
✳ EPOXY COATED REINFORCING STEEL				LBS.		2038
CLASS AA CONCRETE				CU.YDS.		13.2
TOTAL VERTICAL CONCRETE BARRIER RAIL				LN. FT.		100.58

DEAD LOAD DEFLECTION AND CAMBER	
	3'-0" x 1'-9"
25' CORED SLAB UNIT	0.6" Ø L.R. STRAND
CAMBER (SLAB ALONE IN PLACE)	½" ↑
DEFLECTION DUE TO SUPERIMPOSED DEAD LOAD✳✳	⅛" ↓
FINAL CAMBER	⅜" ↑

✳✳ INCLUDES FUTURE WEARING SURFACE

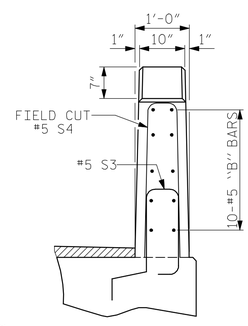

END VIEW

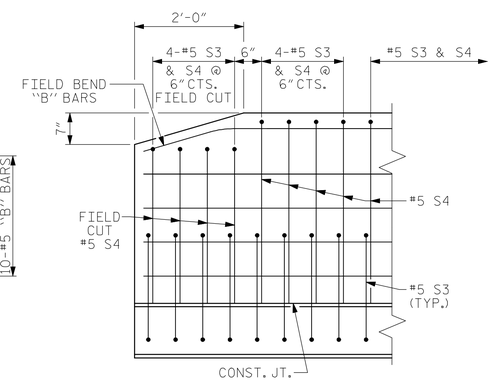

SIDE VIEW

END OF RAIL DETAILS

PROJECT NO. 17BP.8.R.13
RANDOLPH COUNTY
STATION: 15+44.00 -L-

STATE OF NORTH CAROLINA
DEPARTMENT OF TRANSPORTATION
RALEIGH

STANDARD
3'-0" X 1'-9"
PRESTRESSED CONCRETE
CORED SLAB UNIT
SPANS A & C

ASSEMBLED BY :	AMC	DATE :	08/12
CHECKED BY :	JCM	DATE :	08/12
DRAWN BY : MAA	6/10	REV. 12/11	MAA/AAC
CHECKED BY : MKT	7/10		

KCI ASSOCIATES OF NC
KCI ASSOCIATES OF NC, P.A.
9741 SOUTHERN PINE BLVD
SUITE J
CHARLOTTE, NC 28273
704-499-9452
NC LICENSE No. C-0764

NORTH CAROLINA PROFESSIONAL SEAL 032954 ENGINEER JARED C. MEDLIN
6-4-13

REVISIONS						SHEET NO.
NO.	BY:	DATE:	NO.	BY:	DATE:	S-8
1			3			TOTAL SHEETS
2			4			24

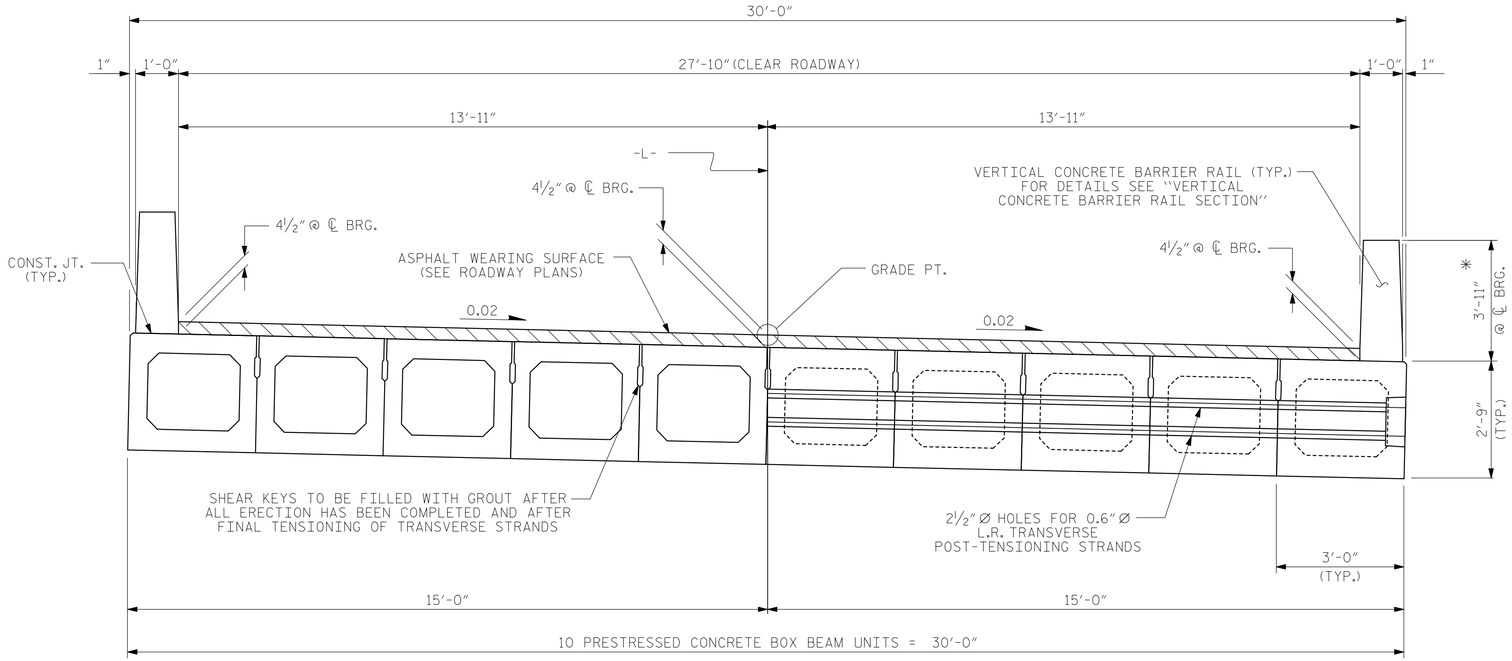

HALF SECTION
THROUGH VOIDS

HALF SECTION
AT INTERMEDIATE DIAPHRAGMS

TYPICAL SECTION

*THE MAXIMUM BARRIER RAIL HEIGHT AND ASPHALT THICKNESS IS SHOWN. THE HEIGHT OF THE BARRIER RAIL AND ASPHALT THICKNESS VARIES WHILE THE TOP OF THE BARRIER RAIL FOLLOWS THE PROFILE OF THE GUTTERLINE. FOR RAIL HEIGHT DETAILS AND ASPHALT THICKNESS, SEE THE "VERTICAL CONCRETE BARRIER RAIL SECTION" DETAIL.

FIXED END FIXED END

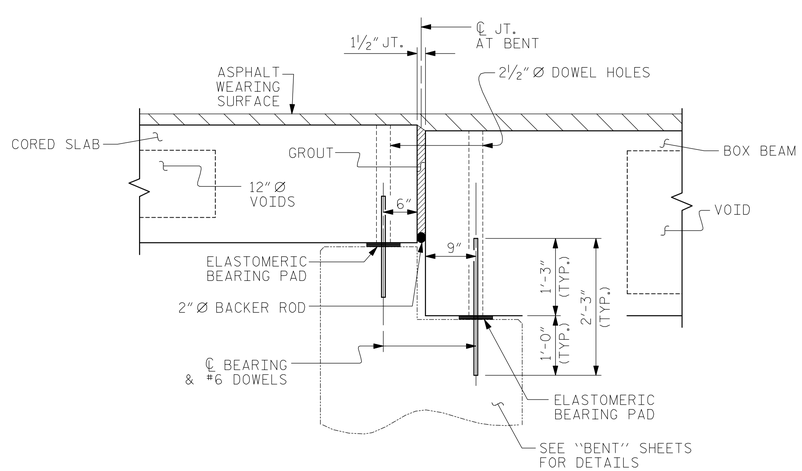

SECTION AT BENT No. 1

(BENT 2 SIMILAR BY ROTATION)

NOTES

ALL PRESTRESSING STRANDS SHALL BE 7-WIRE LOW RELAXATION GRADE 270 STRANDS AND SHALL CONFORM TO AASHTO M203 EXCEPT FOR SAMPLING REQUIREMENTS WHICH SHALL BE IN ACCORDANCE WITH THE STANDARD SPECIFICATIONS.

ALL REINFORCING STEEL CAST WITH THE BOX BEAM SECTIONS SHALL BE GRADE 60 AND SHALL BE INCLUDED IN THE UNIT PRICE BID FOR PRESTRESSED CONCRETE BOX BEAMS.

RECESSES FOR TRANSVERSE STRANDS SHALL BE GROUTED AFTER THE TENSIONING OF THE STRANDS.

THE 2½" Ø DOWEL HOLES AT FIXED ENDS OF BOX BEAM SECTIONS SHALL BE FILLED WITH NON-SHRINK GROUT.

THE BACKER RODS SHALL CONFORM TO THE REQUIREMENTS OF TYPE M BOND BREAKER. SEE SECTION 1028 OF THE STANDARD SPECIFICATIONS.

THE TRANSFER OF LOAD FROM THE ANCHORAGES TO THE BOX BEAM UNIT SHALL BE DONE WHEN THE CONCRETE HAS REACHED A COMPRESSIVE STRENGTH OF NOT LESS THAN 6000 PSI.

ALL REINFORCING STEEL IN VERTICAL CONCRETE BARRIER RAILS SHALL BE EPOXY COATED.

PRESTRESSING STRANDS SHALL BE CUT FLUSH WITH THE BOX BEAM UNIT ENDS.

APPLY EPOXY PROTECTIVE COATING TO BOX BEAM UNIT ENDS.

VERTICAL GROOVED CONTRACTION JOINTS, ½" IN DEPTH, SHALL BE TOOLED IN ALL EXPOSED FACES OF THE BARRIER RAIL AND IN ACCORDANCE WITH ARTICLE 825-10(B) OF THE STANDARD SPECIFICATIONS. A VERTICAL CONTRACTION JOINT SHALL BE LOCATED AT EACH THIRD POINT BETWEEN BARRIER RAIL EXPANSION JOINTS. ONLY ONE CONTRACTION JOINT IS REQUIRED AT MIDPOINT OF BARRIER RAIL SEGMENTS LESS THAN 20 FEET IN LENGTH AND NO CONTRACTION JOINTS ARE REQUIRED FOR THOSE SEGMENTS LESS THAN 10 FEET IN LENGTH.

THE LOCATION OF THE VOID DRAINS MAY BE SHIFTED SLIGHTLY WHERE NECESSARY TO CLEAR PRESTRESSING STRANDS OR TRANSVERSE REINFORCING STEEL.

FOR GROUT FOR STRUCTURES, SEE SPECIAL PROVISIONS.

PROJECT NO. 17BP.8.R.13
RANDOLPH COUNTY
STATION: 15+44.00 -L-

ASSEMBLED BY : DJD	DATE : 1/13		
CHECKED BY : JCM	DATE : 1/13		
DRAWN BY : DGE 8/11			
CHECKED BY : TMG 11/11			

KCI ASSOCIATES OF NC
KCI ASSOCIATES OF NC, P.A.
9741 SOUTHERN PINE BLVD
SUITE J
CHARLOTTE, NC 28273
704-499-9452
NC LICENSE No. C-0764

NORTH CAROLINA PROFESSIONAL SEAL 032954 ENGINEER JARED C. MEDLIN
6-4-13

STATE OF NORTH CAROLINA
DEPARTMENT OF TRANSPORTATION
RALEIGH

STANDARD
3'-0" X 2'-9"
PRESTRESSED CONCRETE
BOX BEAM UNIT
SPAN B

REVISIONS						SHEET NO.
NO.	BY:	DATE:	NO.	BY:	DATE:	S-9
1			3			TOTAL SHEETS
2			4			24

STD. NO. STD.33PCBB1_30

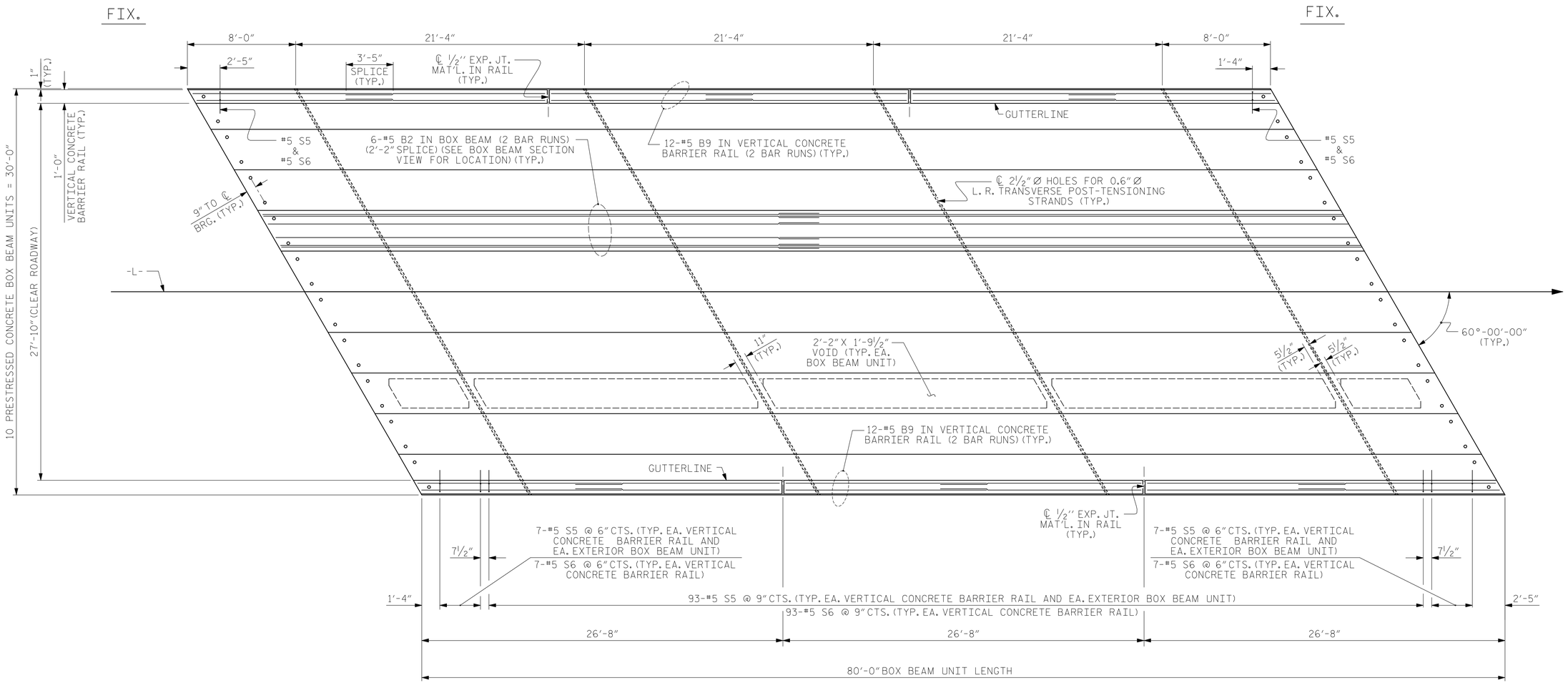

PLAN OF UNIT

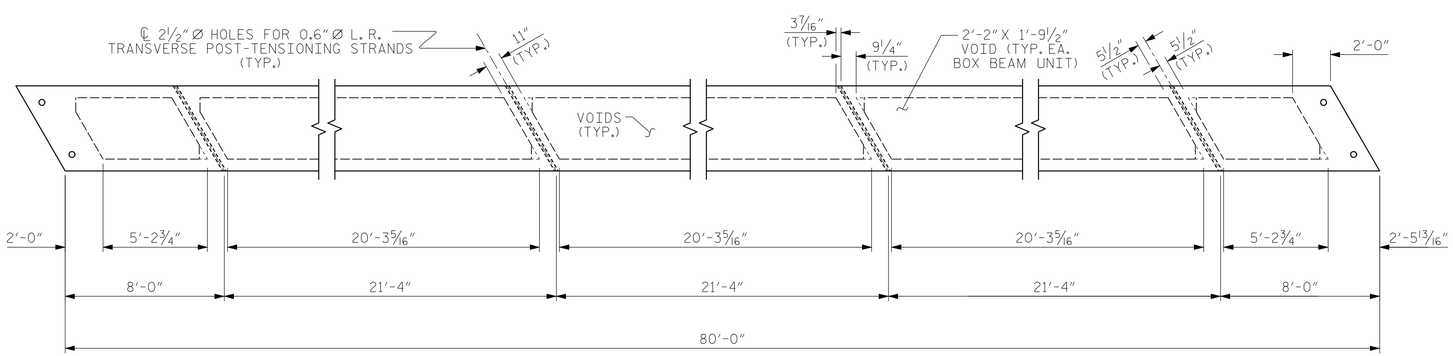

DIAPHRAGM AND VOID LAYOUT

PROJECT NO. 17BP.8.R.13

RANDOLPH COUNTY

STATION: 15+44.00 -L-

STATE OF NORTH CAROLINA
DEPARTMENT OF TRANSPORTATION
RALEIGH

PLAN OF 80' UNIT 27'-10" CLEAR ROADWAY SPAN B 60° SKEW

ASSEMBLED BY :	DJD	DATE :	08/12
CHECKED BY :	JCM	DATE :	08/12
DRAWN BY : MAA 6/10	REV. 12/5/11 MAA/AAC		
CHECKED BY : MKT 7/10			

KCI ASSOCIATES OF NC, P.A.
9741 SOUTHERN PINE BLVD
SUITE J
CHARLOTTE, NC 28273
704-499-9452
NC LICENSE No. C-0764

NORTH CAROLINA PROFESSIONAL SEAL 032954 ENGINEER JARED C. MEDLIN
6-4-13

REVISIONS						SHEET NO.
NO.	BY:	DATE:	NO.	BY:	DATE:	S-10
1			3			TOTAL SHEETS
2			4			24

STD.NO.33PCBB_30_60S_80L

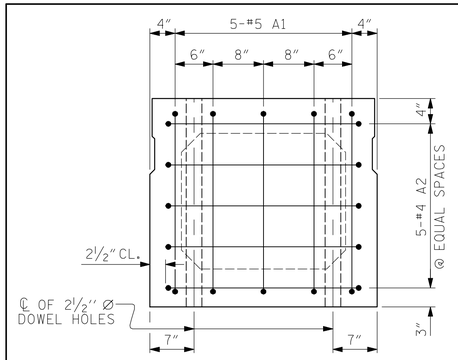

END ELEVATION

SHOWING PLACEMENT OF #5 & #4 "A" BARS AND LOCATION OF DOWEL HOLES. (INTERIOR BOX BEAM SECTION SHOWN-EXTERIOR SECTION SIMILAR EXCEPT SHEAR KEY LOCATION. STRAND LAYOUT NOT SHOWN.)

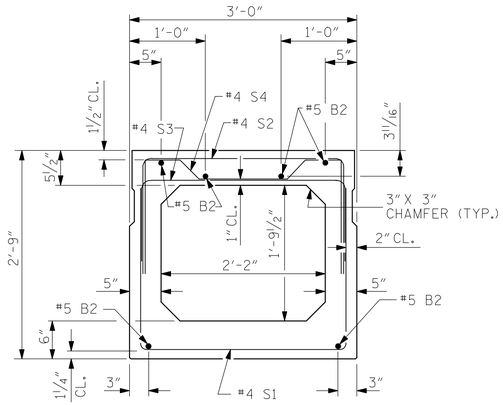

INTERIOR BOX BEAM SECTION

(STRAND LAYOUT NOT SHOWN)

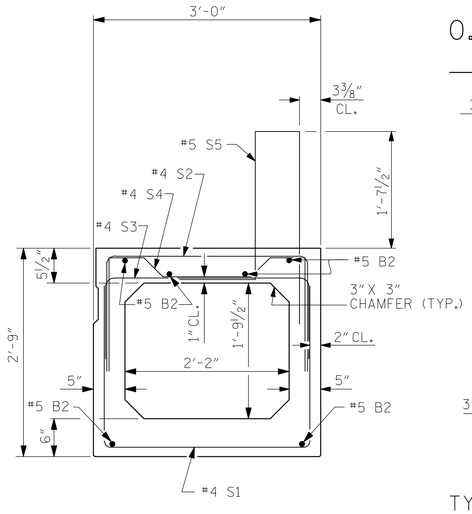

EXTERIOR BOX BEAM SECTION

(STRAND LAYOUT NOT SHOWN)

0.6" Ø LOW RELAXATION STRAND LAYOUT

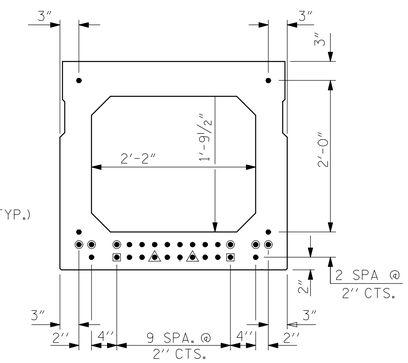

TYPICAL STRAND LOCATION

(24 STRANDS REQUIRED)

BAR TYPES

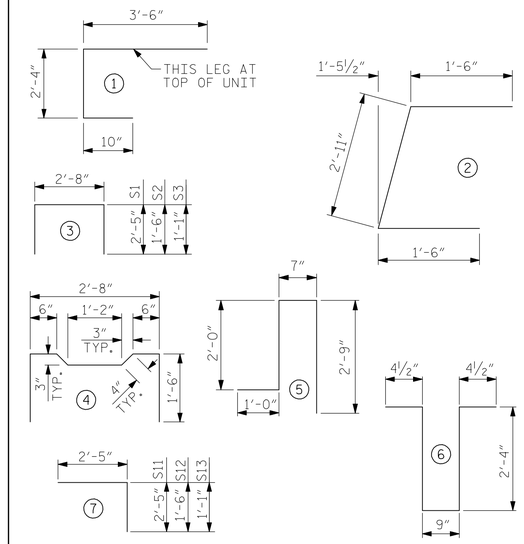

ALL BAR DIMENSIONS ARE OUT TO OUT

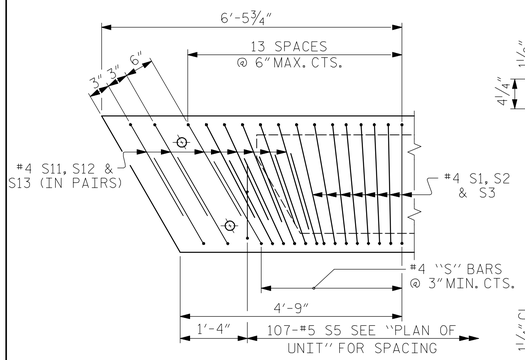

DETAIL "B"

EXTERIOR UNIT SHOWN, INTERIOR UNIT SIMILAR EXCEPT OMIT #5 S5 BARS. "B" BARS AND "A" BARS NOT SHOWN.

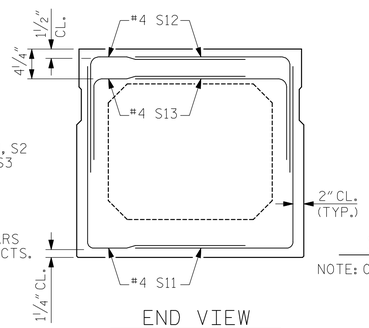

END VIEW

(SHOWING #4 "S" BARS IN END OF BEAM)

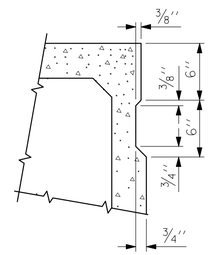

SHEAR KEY DETAIL

NOTE: OMIT SHEAR KEY ON OUTSIDE FACE OF EXTERIOR BOX BEAMS.

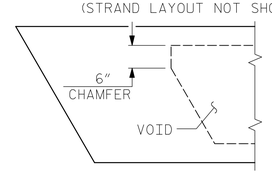

CHAMFER DETAIL

SHOWING 6" VOID CHAMFER

GRADE 270 STRANDS	
	0.6" Ø L.R.
AREA (SQUARE INCHES)	0.217
ULTIMATE STRENGTH (LBS. PER STRAND)	58,600
APPLIED PRESTRESS (LBS. PER STRAND)	43,950

DEBONDING LEGEND

- ● FULLY BONDED STRANDS
- ◉ STRANDS DEBONDED FOR 4'-0" FROM END OF GIRDER
- ◉ STRANDS DEBONDED FOR 10'-0" FROM END OF GIRDER
- ◉ OPTIONAL FULL LENGTH DEBONDED STRANDS. THESE STRANDS ARE NOT REQUIRED. IF THE FABRICATOR CHOOSES TO INCLUDE THESE STRANDS IN THE BOX BEAM UNIT, THE STRANDS SHALL BE DEBONDED FOR THE FULL LENGTH OF THE UNIT AT NO ADDITIONAL COST.

BOND SHALL BE BROKEN ON STRANDS AS SHOWN FOR THE SPECIFIED LENGTH FROM EACH END OF THE BOX BEAM. SEE STANDARD SPECIFICATIONS ARTICLE 1078-7.

BILL OF MATERIAL FOR ONE BOX BEAM SECTION

				EXTERIOR UNIT		INTERIOR UNIT	
BAR	NUMBER	SIZE	TYPE	LENGTH	WEIGHT	LENGTH	WEIGHT
A1	10	#5	1	6'-8"	70	6'-8"	70
A2	34	#4	2	5'-11"	134	5'-11"	134
B2	12	#5	STR	40'-11"	512	40'-11"	512
K1	12	#4	6	6'-2"	49	6'-2"	49
K2	8	#4	STR	2'-10"	15	2'-10"	15
S1	62	#4	3	7'-6"	311	7'-6"	311
S2	62	#4	3	5'-8"	235	5'-8"	235
S3	107	#4	3	4'-10"	345	4'-10"	345
S4	45	#4	4	5'-10"	175	5'-10"	175
S11	32	#4	7	4'-10"	93	4'-10"	93
S12	32	#4	7	3'-11"	84	3'-11"	84
S13	32	#4	7	3'-6"	75	3'-6"	75
✳ S5	107	#5	5	6'-4"	707	--	--
REINFORCING STEEL				2098	LBS.	2098	LBS.
✳ EPOXY COATED REINF. STEEL				707	LBS.		
8000 P.S.I. CONCRETE				14.3	CU. YDS.	14.2	CU. YDS.
0.6" Ø L.R. STRANDS				No. 24		No. 24	

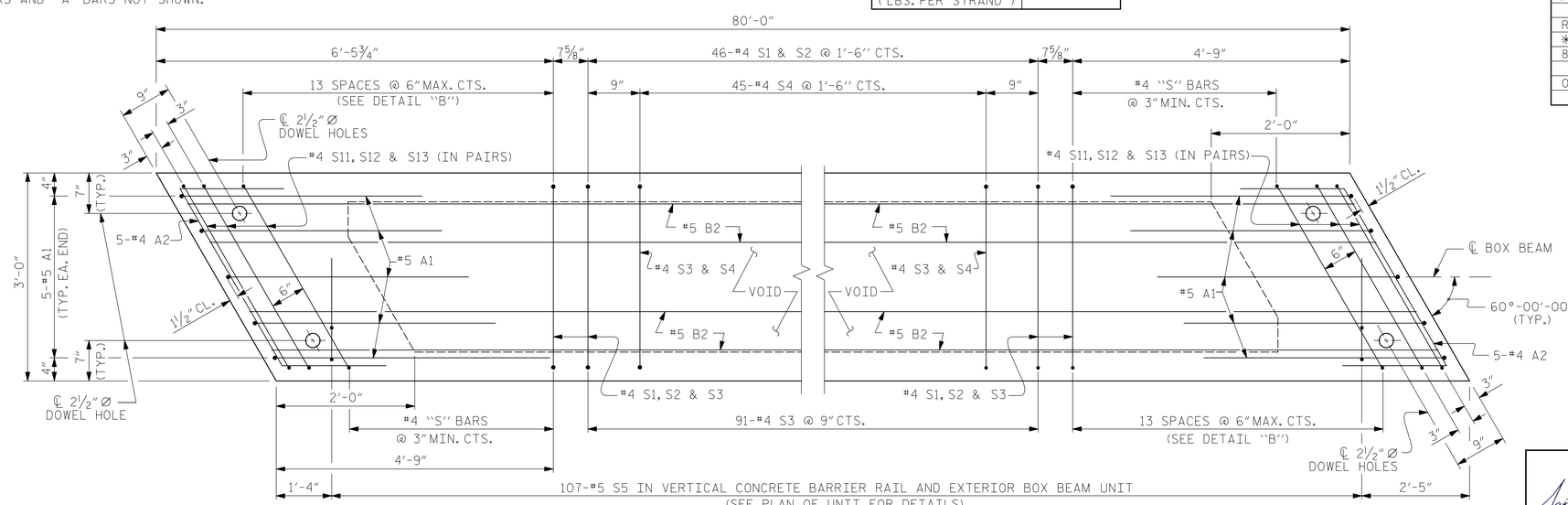

PLAN OF BOX BEAM

EXTERIOR UNIT SHOWN, INTERIOR UNIT SIMILAR EXCEPT OMIT #5 S5 BARS.
FOR LOCATION OF DIAPHRAGMS, SEE PLAN OF UNIT.
FOR REINFORCING STEEL IN DIAPHRAGMS, SEE DIAPHRAGM DETAILS.

PROJECT NO. 17BP.8.R.13
RANDOLPH COUNTY
STATION: 15+44.00 -L-

STATE OF NORTH CAROLINA
DEPARTMENT OF TRANSPORTATION
RALEIGH

STANDARD
3'-0" X 2'-9"
PRESTRESSED CONCRETE
BOX BEAM UNIT
SPAN B

REVISIONS						SHEET NO.
NO.	BY:	DATE:	NO.	BY:	DATE:	S-11
1			3			TOTAL SHEETS
2			4			24

KCI ASSOCIATES OF NC, P.A.
9741 SOUTHERN PINE BLVD
SUITE J
CHARLOTTE, NC 28273
704-499-9452
NC LICENSE No. C-0764

PROFESSIONAL SEAL 032954 ENGINEER JARED C. MEDLIN
6-4-13

ASSEMBLED BY : DJD		DATE : 1/13	
CHECKED BY : JCM		DATE : 1/13	
DRAWN BY : DGE 11/11			
CHECKED BY : TMG 11/11			

STD. NO. 33PCBB4_60S_80L

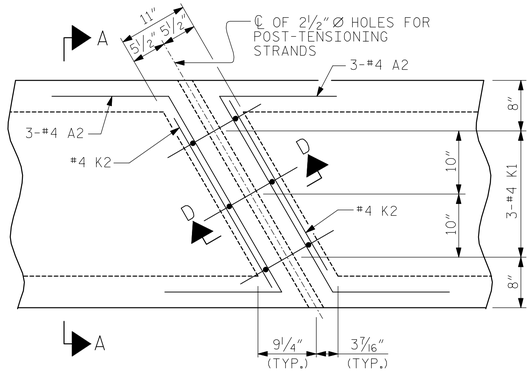

PLAN

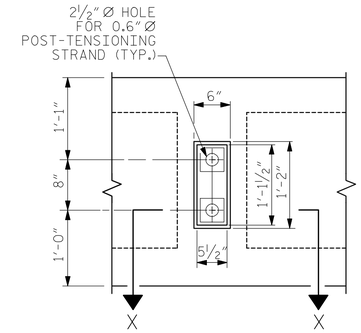

VIEW Y-Y

SHOWING ELEVATION VIEW OF GROUTED RECESS

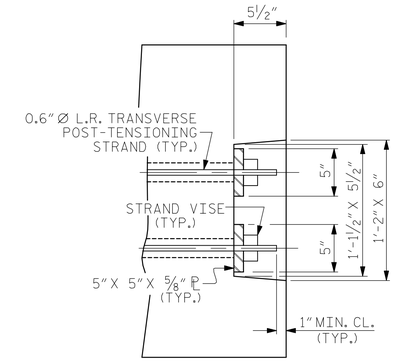

DETAIL "C"

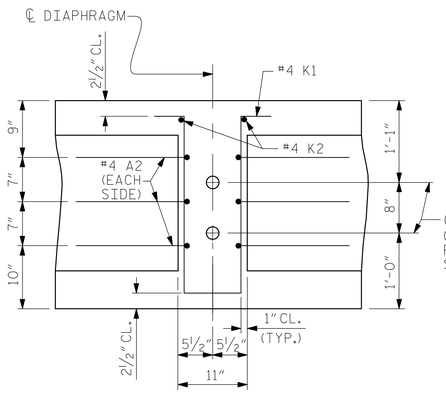

SECTION D-D

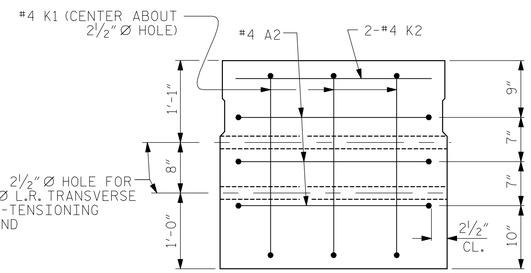

SECTION A-A

VOIDS NOT SHOWN

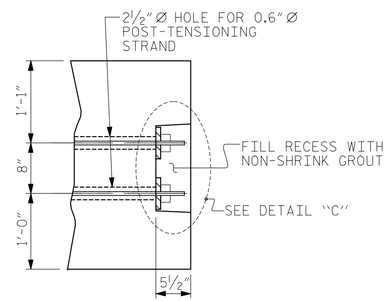

PART SECTION AT RECESS

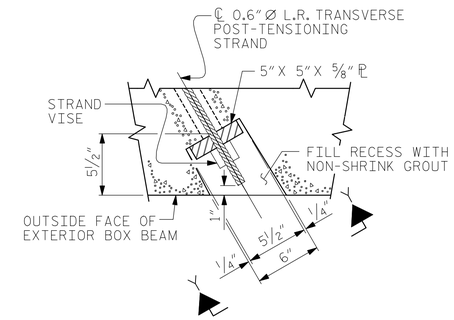

SECTION X-X

SHOWING PLAN VIEW OF GROUTED RECESS

GROUTED RECESS DETAIL AT END OF POST-TENSIONED STRANDS OF EXTERIOR BOX BEAM

DOUBLE DIAPHRAGM DETAILS

#4 "S" BARS NOT SHOWN. #4 "S" BARS MAY BE SHIFTED SLIGHTLY TO CLEAR 2" Ø HOLE.

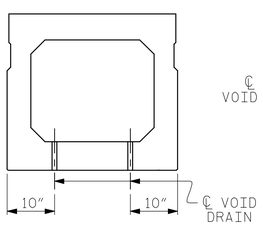

SECTION B-B

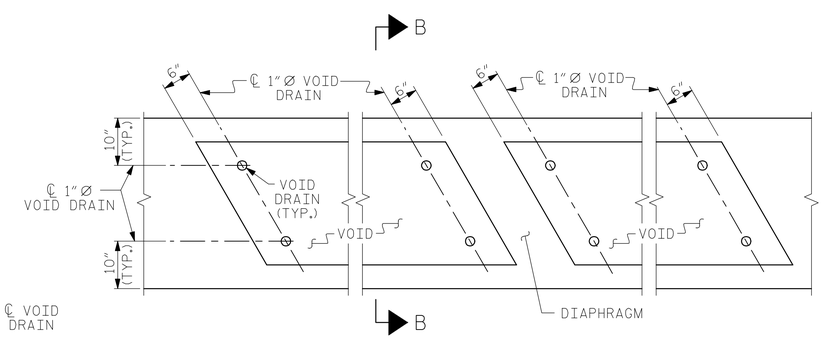

PART PLAN

VOID DRAIN DETAILS

(DIMENSIONS SHOWN ARE TYPICAL FOR EACH VOID)

DEAD LOAD DEFLECTION AND CAMBER	
	3'-0" x 2'-9"
80' BOX BEAM UNIT	0.6"Ø L.R. STRAND
CAMBER (SLAB ALONE IN PLACE)	3" ↑
DEFLECTION DUE TO SUPERIMPOSED DEAD LOAD**	½" ↓
FINAL CAMBER	2½" ↑

** INCLUDES FUTURE WEARING SURFACE

PROJECT NO. 17BP.8.R.13

RANDOLPH COUNTY

STATION: 15+44.00 -L-

STATE OF NORTH CAROLINA
DEPARTMENT OF TRANSPORTATION
RALEIGH

STANDARD
3'-0" X 2'-9"
PRESTRESSED CONCRETE
BOX BEAM UNIT
SPAN B

KCI ASSOCIATES OF NC

KCI ASSOCIATES OF NC, P.A.
9741 SOUTHERN PINE BLVD
SUITE J
CHARLOTTE, NC 28273
704-499-9452
NC LICENSE No. C-0764

NORTH CAROLINA PROFESSIONAL SEAL 032954 ENGINEER JARED C. MEDLIN
6-4-13

REVISIONS						SHEET NO.
NO.	BY:	DATE:	NO.	BY:	DATE:	S-12
1			3			TOTAL SHEETS
2			4			24

ASSEMBLED BY : DJD	DATE : 1/13
CHECKED BY : JCM	DATE : 1/13
DRAWN BY : DGE 11/11	
CHECKED BY : TMG 11/11	

STD.NO.33PCBB5_60S

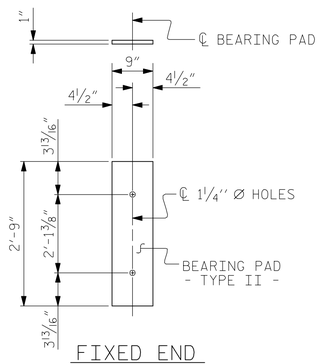

FIXED END
(TYPE II - 20 REQ'D)

ELASTOMERIC BEARING DETAILS

ELASTOMER IN ALL BEARINGS SHALL BE 60 DUROMETER HARDNESS.

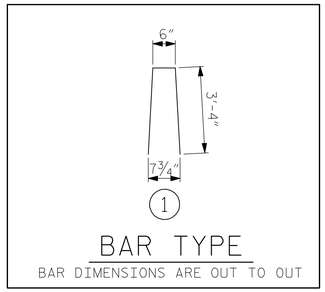

BAR TYPE

BAR DIMENSIONS ARE OUT TO OUT

BOX BEAM UNITS REQUIRED			
	NUMBER	LENGTH	TOTAL LENGTH
EXTERIOR B.B.	2	80'-0"	160'-0"
INTERIOR B.B.	8	80'-0"	640'-0"
TOTAL	10	———	800'-0"

BILL OF MATERIAL FOR VERTICAL CONCRETE BARRIER RAIL					
BAR	BARS PER PAIR OF EXTERIOR UNITS	SIZE	TYPE	LENGTH	WEIGHT
	80' UNIT				
✳ B9	144	#5	STR	15'-1"	2265
✳ S6	214	#5	1	7'-2"	1600
✳ EPOXY COATED REINFORCING STEEL			LBS.		3865
CLASS AA CONCRETE			CU.YDS.		21.5
TOTAL VERTICAL CONCRETE BARRIER RAIL			LN. FT.		160.0

GUTTERLINE ASPHALT THICKNESS & RAIL HEIGHT		
	ASPHALT OVERLAY THICKNESS @ MID-SPAN	RAIL HEIGHT @ MID-SPAN
80' UNITS	2"	3'-8½"

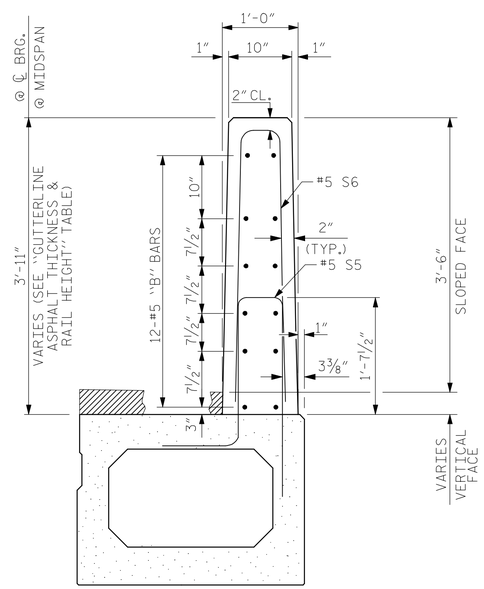

SECTION THRU RAIL

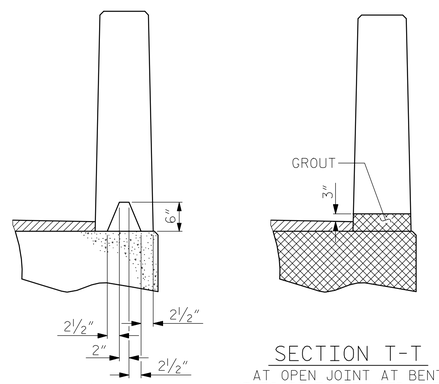

SECTION S-S
AT DAM IN OPEN JOINT
(THIS IS TO BE USED ONLY WHEN SLIP FORM IS USED)

SECTION T-T
AT OPEN JOINT AT BENT
(THIS IS TO BE USED WHERE FOAM JOINT IS NOT USED)

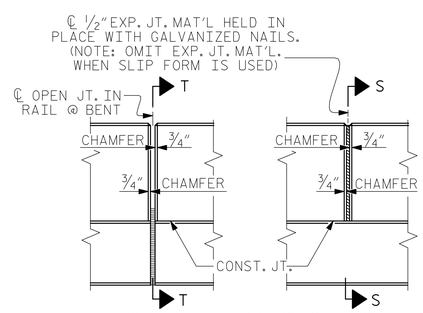

ELEVATION AT EXPANSION JOINTS

VERTICAL CONCRETE BARRIER RAIL DETAILS

PROJECT NO. 17BP.8.R.13
RANDOLPH COUNTY
STATION: 15+44.00 -L-

STATE OF NORTH CAROLINA
DEPARTMENT OF TRANSPORTATION
RALEIGH

3'-0" X 2'-9"
PRESTRESSED CONCRETE
BOX BEAM UNIT
SPAN B

KCI ASSOCIATES OF NC, P.A.
9741 SOUTHERN PINE BLVD
SUITE J
CHARLOTTE, NC 28273
704-499-9452
NC LICENSE No. C-0764

NORTH CAROLINA PROFESSIONAL SEAL 032954 ENGINEER JARED C. MCDUFFIE
6-4-13

REVISIONS						SHEET NO.
NO.	BY:	DATE:	NO.	BY:	DATE:	S-13
1			3			TOTAL SHEETS
2			4			24

ASSEMBLED BY : DJD DATE : 1/13
CHECKED BY : JCM DATE : 1/13
DRAWN BY : DGE 10/11
CHECKED BY : TMG 11/11

STD. NO. 33PCBB8_60&120S

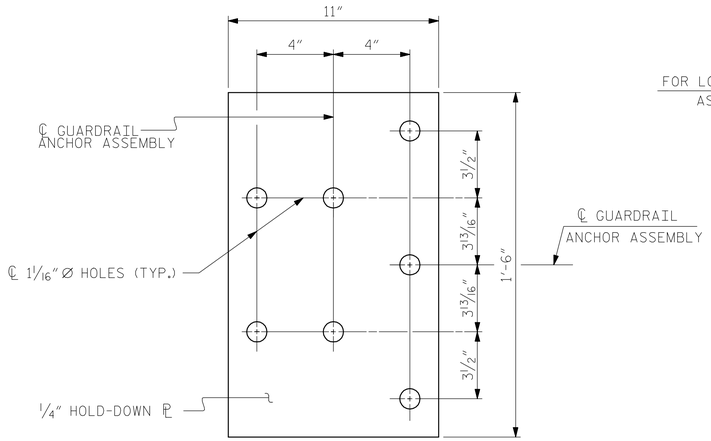

PLAN

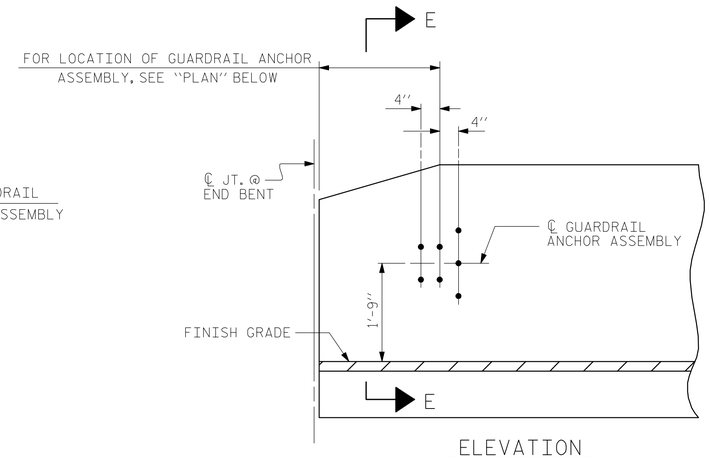

ELEVATION

NOTES

THE GUARDRAIL ANCHOR ASSEMBLY SHALL CONSIST OF A 1/4" HOLD DOWN PLATE AND 7 - 7/8" Ø BOLTS WITH NUTS AND WASHERS.

THE HOLD-DOWN PLATE SHALL CONFORM TO AASHTO M270 GRADE 36. AFTER FABRICATION, THE HOLD-DOWN PLATE SHALL BE HOT-DIP GALVANIZED IN ACCORDANCE WITH AASHTO M111.

BOLTS SHALL CONFORM TO THE REQUIREMENTS OF ASTM A307 AND NUTS SHALL CONFORM TO THE REQUIREMENTS OF AASHTO M291. BOLTS, NUTS AND WASHERS SHALL BE GALVANIZED. (AT THE CONTRACTOR'S OPTION, STAINLESS STEEL BOLTS, NUTS AND WASHERS MAY BE USED AS AN ALTERNATE FOR THE 7/8" Ø GALVANIZED BOLTS, NUTS AND WASHERS. THEY SHALL CONFORM TO OR EXCEED THE MECHANICAL REQUIREMENTS OF ASTM A307. THE USE OF THIS ALTERNATE SHALL BE APPROVED BY THE ENGINEER.)

THE GUARDRAIL ANCHOR ASSEMBLY IS REQUIRED AT ALL POINTS WHERE APPROACH GUARDRAIL IS TO BE ATTACHED TO THE END OF BARRIER RAIL. FOR POINTS OF ATTACHMENT, SEE SKETCH.

AFTER INSTALLATION, THE EXPOSED THREAD OF THE BOLT SHALL BE BURRED WITH A SHARP POINTED TOOL.

THE COST OF THE GUARDRAIL ANCHOR ASSEMBLY SHALL BE INCLUDED IN THE UNIT CONTRACT PRICE BID FOR VERTICAL CONCRETE BARRIER RAIL.

THE VERTICAL REINFORCING BARS MAY BE SHIFTED SLIGHTLY IN THE VERTICAL CONCRETE BARRIER RAIL TO CLEAR ASSEMBLY BOLTS.

THE 1 1/4" Ø HOLES SHALL BE FORMED OR DRILLED WITH A CORE BIT. IMPACT TOOLS WILL NOT BE PERMITTED. ANY CONCRETE DAMAGED BY THIS WORK SHALL BE REPAIRED TO THE SATISFACTION OF THE ENGINEER.

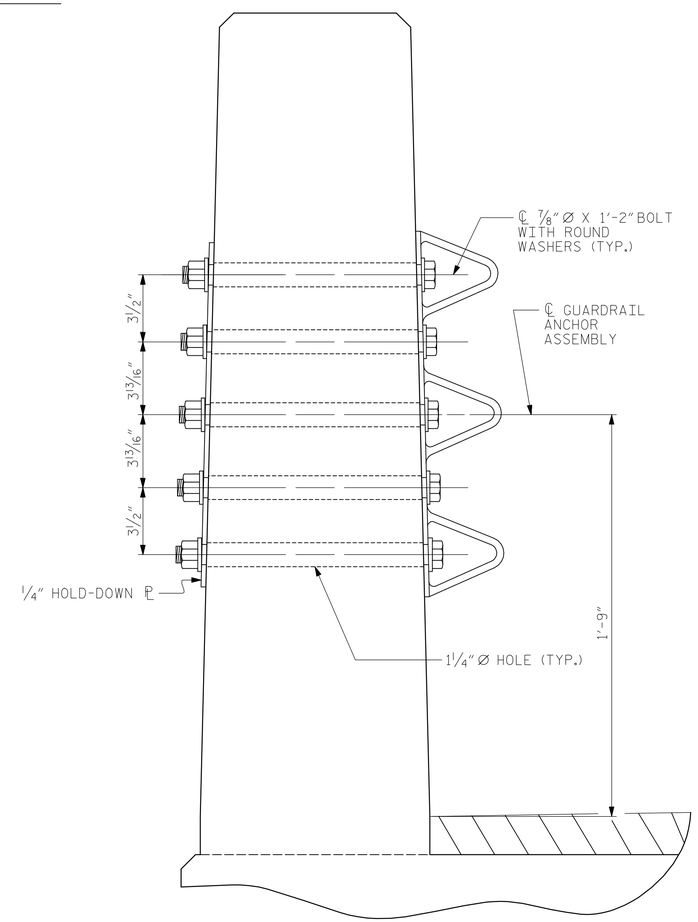

SECTION E-E

GUARDRAIL ANCHOR ASSEMBLY DETAILS

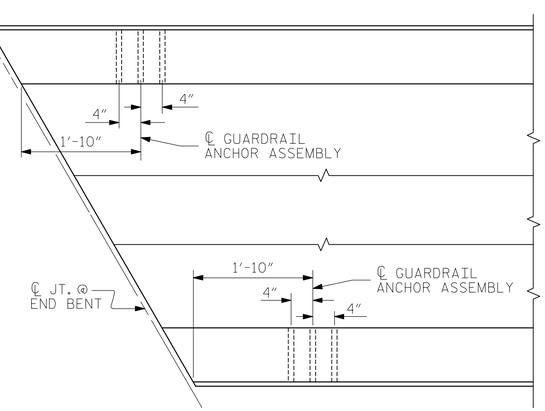

PLAN

LOCATION OF ANCHORS FOR GUARDRAIL

END BENT #1 SHOWN, END BENT #2 SIMILAR.

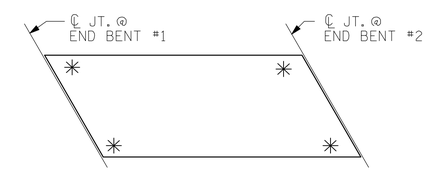

SKETCH SHOWING POINTS OF ATTACHMENT

✳ DENOTES GUARDRAIL ANCHOR ASSEMBLY

PROJECT NO. 17BP.8.R.13

RANDOLPH COUNTY

STATION: 15+44.00 -L-

STATE OF NORTH CAROLINA
DEPARTMENT OF TRANSPORTATION
RALEIGH

STANDARD
GUARDRAIL ANCHORAGE FOR VERTICAL CONCRETE BARRIER RAIL

ASSEMBLED BY :	DJD	DATE :	11/12
CHECKED BY :	JCM	DATE :	11/12
DRAWN BY : MAA 5/10	ADDED 5/6/10		
CHECKED BY : GM 5/10			

KCI ASSOCIATES OF NC, P.A.
9741 SOUTHERN PINE BLVD
SUITE J
CHARLOTTE, NC 28273
704-499-9452
NC LICENSE No. C-0764

NORTH CAROLINA PROFESSIONAL SEAL 032954 ENGINEER JARED C. MEDLIN
6-4-13

REVISIONS						SHEET NO.
NO.	BY:	DATE:	NO.	BY:	DATE:	S-14
1			3			TOTAL SHEETS
2			4			24

STD. NO. GRA3

NOTES

STIRRUPS IN CAP MAY BE SHIFTED AS NECESSARY TO CLEAR DOWELS.

THE CONCRETE IN THE SHADED AREA OF THE WING SHALL BE POURED AFTER THE VERTICAL CONCRETE BARRIER RAIL IS CAST IF SLIP FORMING IS USED.

FOR PILE SPLICE DETAILS, SEE SHEET 4 OF 4.

FOR WING DETAILS, SEE SHEET 3 OF 4.

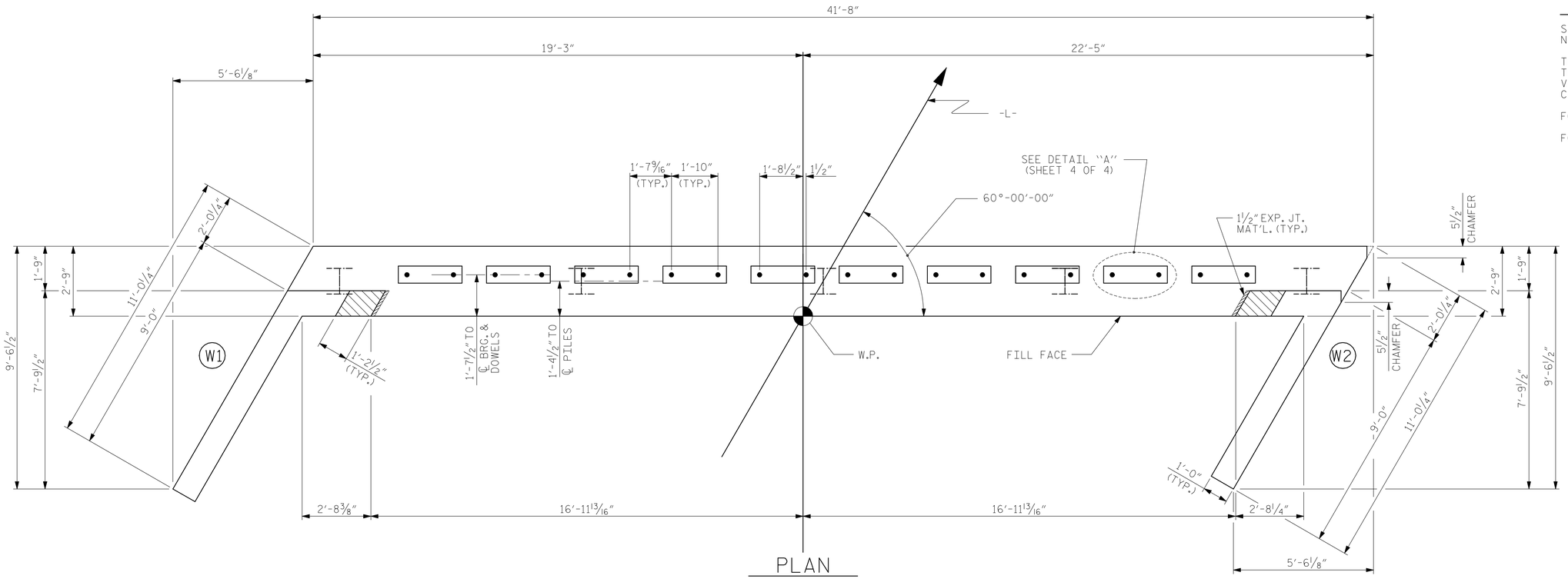

PLAN

TOP OF PILE ELEVATIONS	
1	533.452
2	533.214
3	532.977
4	532.740
5	532.502

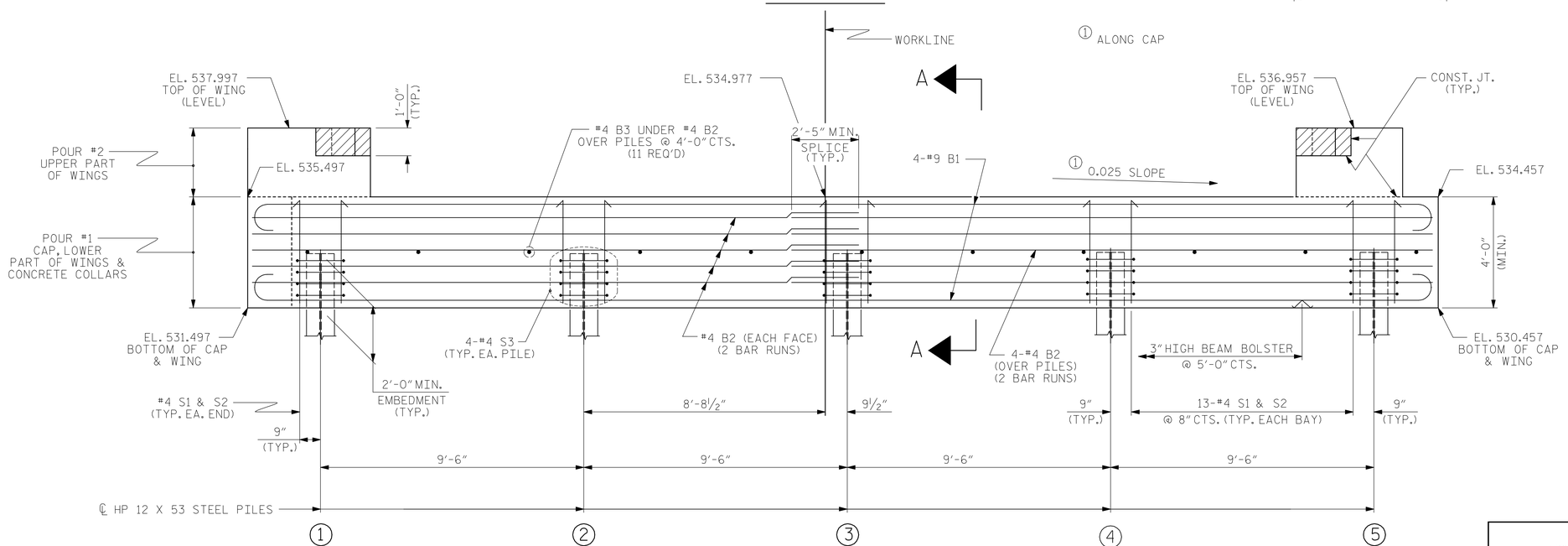

ELEVATION

WINGS NOT SHOWN FOR CLARITY.
FOR SECTION A-A, SEE SHEET 4 OF 4.
CONCRETE COLLARS FOR STEEL PILES NOT SHOWN IN PLAN AND ELEVATION VIEWS FOR CLARITY.
SEE "CORROSION PROTECTION FOR STEEL PILES DETAIL", SHEET 4 OF 4.

PROJECT NO. 17BP.8.R.13
RANDOLPH COUNTY
STATION: 15+44.00 -L-

SHEET 1 OF 4

STATE OF NORTH CAROLINA
DEPARTMENT OF TRANSPORTATION
RALEIGH

SUBSTRUCTURE

END BENT No. 1

ASSEMBLED BY : DJD	DATE : 1/13
CHECKED BY : JCM	DATE : 1/13
DRAWN BY : WJH 12/11	
CHECKED BY : AAC 12/11	

KCI ASSOCIATES OF NC, P.A.
9741 SOUTHERN PINE BLVD
SUITE J
CHARLOTTE, NC 28273
704-499-9452
NC LICENSE No. C-0764

NORTH CAROLINA PROFESSIONAL SEAL 032954 ENGINEER JARED C. MEDLIN
6-4-13

REVISIONS						SHEET NO.
NO.	BY:	DATE:	NO.	BY:	DATE:	S-15
1			3			TOTAL SHEETS
2			4			24

STD. NO. EB_30_60S4

NOTES

STIRRUPS IN CAP MAY BE SHIFTED AS NECESSARY TO CLEAR DOWELS.

THE CONCRETE IN THE SHADED AREA OF THE WING SHALL BE POURED AFTER THE VERTICAL CONCRETE BARRIER RAIL IS CAST IF SLIP FORMING IS USED.

FOR PILE SPLICE DETAILS, SEE SHEET 4 OF 4.

FOR WING DETAILS, SEE SHEET 3 OF 4.

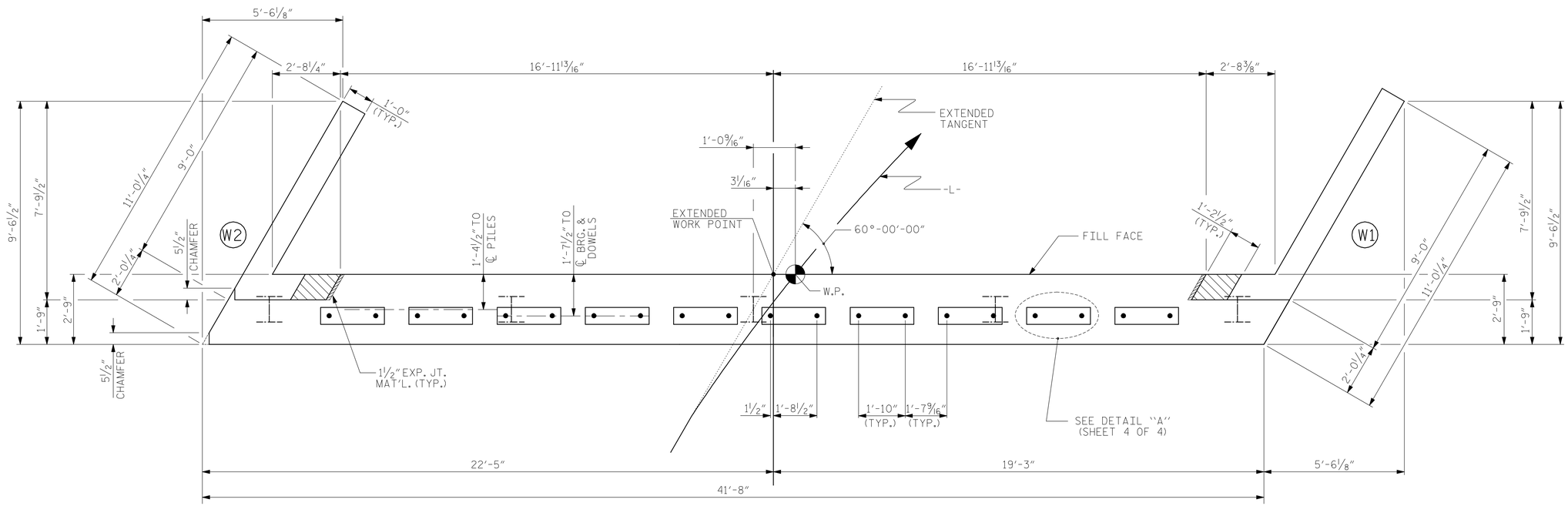

PLAN

TOP OF PILE ELEVATIONS	
1	531.538
2	531.301
3	531.063
4	530.826
5	530.588

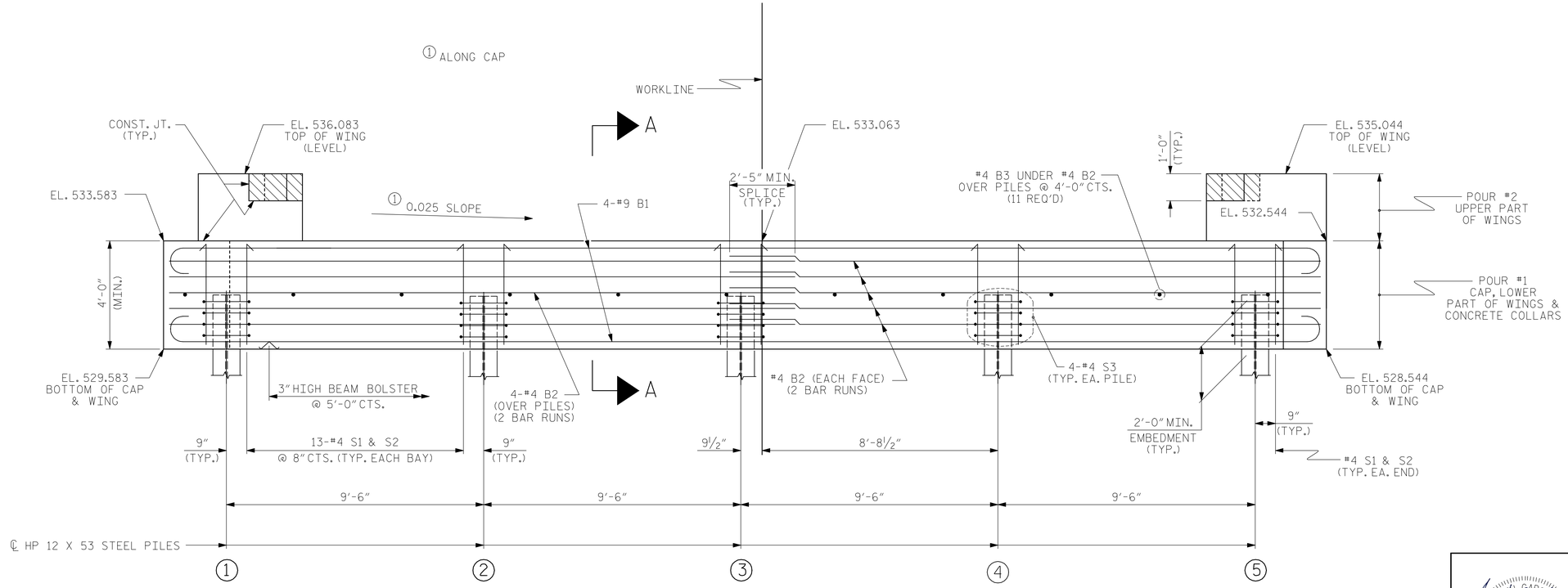

ELEVATION

WINGS NOT SHOWN FOR CLARITY.
FOR SECTION A-A, SEE SHEET 4 OF 4.
CONCRETE COLLARS FOR STEEL PILES NOT SHOWN IN PLAN AND ELEVATION VIEWS FOR CLARITY.
SEE "CORROSION PROTECTION FOR STEEL PILES DETAIL", SHEET 4 OF 4.

PROJECT NO. 17BP.8.R.13
RANDOLPH COUNTY
STATION: 15+44.00 -L-

SHEET 2 OF 4

STATE OF NORTH CAROLINA
DEPARTMENT OF TRANSPORTATION
RALEIGH

SUBSTRUCTURE
END BENT No. 2

KCI ASSOCIATES OF NC, P.A.
9741 SOUTHERN PINE BLVD
SUITE J
CHARLOTTE, NC 28273
704-499-9452
NC LICENSE No. C-0764

NORTH CAROLINA PROFESSIONAL SEAL 032954 ENGINEER JARED C. MEDLIN
6-4-13

REVISIONS						SHEET NO.
NO.	BY:	DATE:	NO.	BY:	DATE:	S-16
1			3			TOTAL SHEETS
2			4			24

ASSEMBLED BY : DJD	DATE : 1/13
CHECKED BY : JCM	DATE : 1/13
DRAWN BY : WJH 12/11	
CHECKED BY : AAC 12/11	

STD. NO. EB_30_60S4

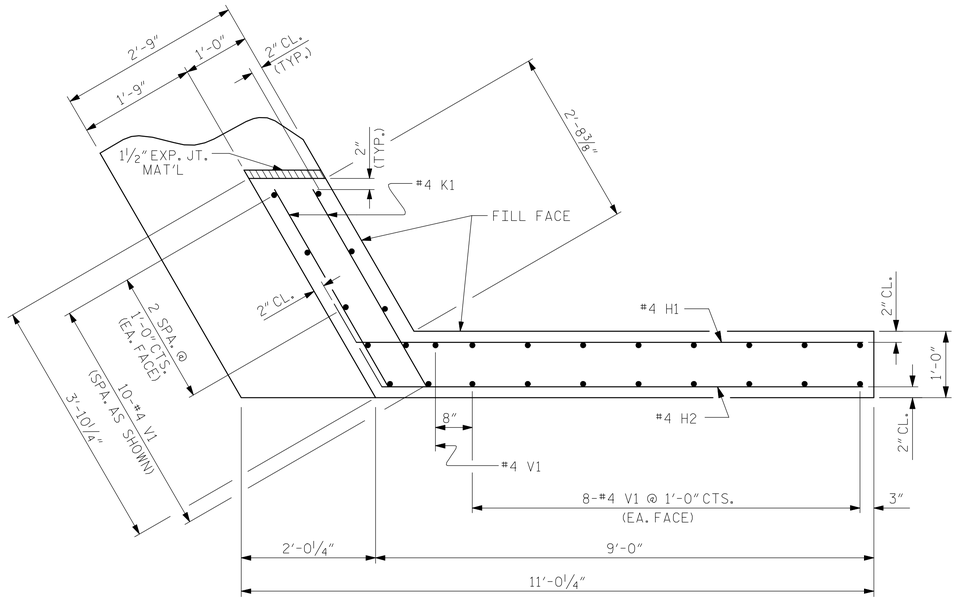

PLAN OF WING (W1)

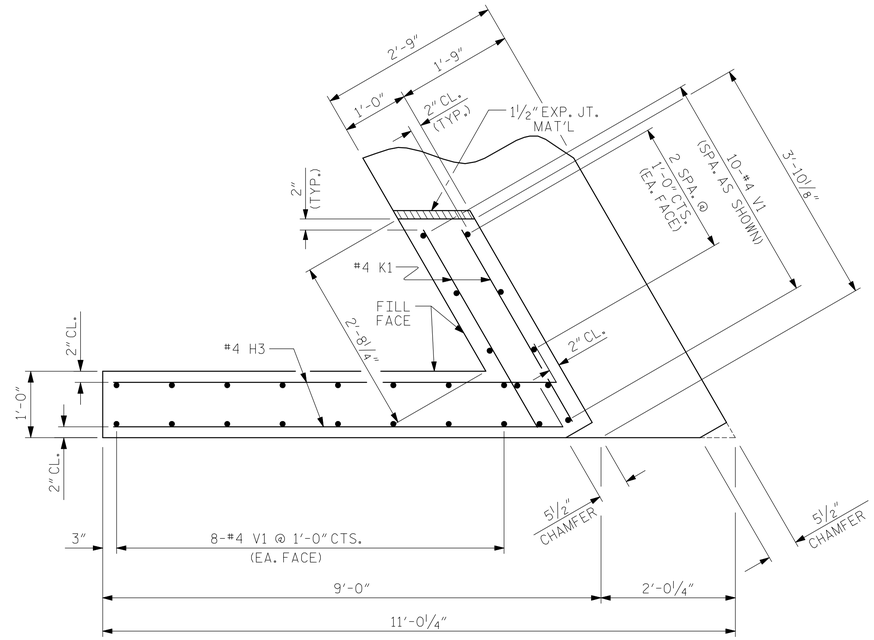

PLAN OF WING (W2)

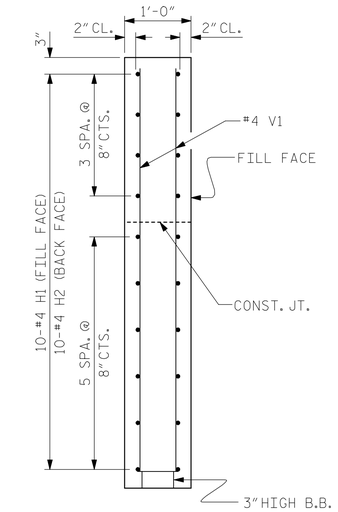

SECTION X-X

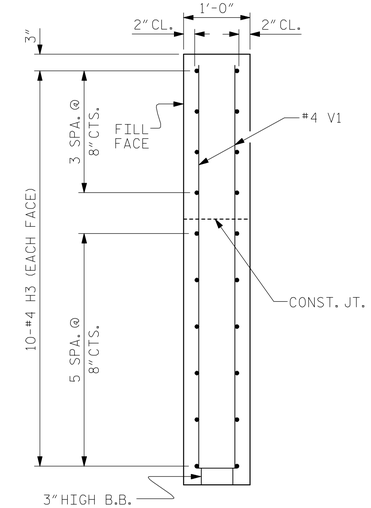

SECTION Y-Y

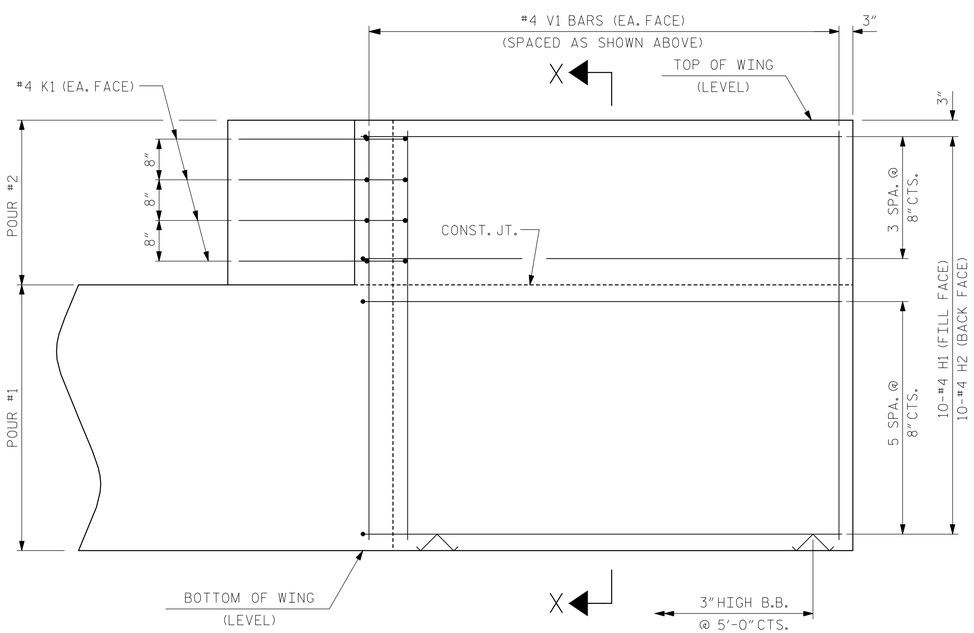

ELEVATION OF WING (W1)

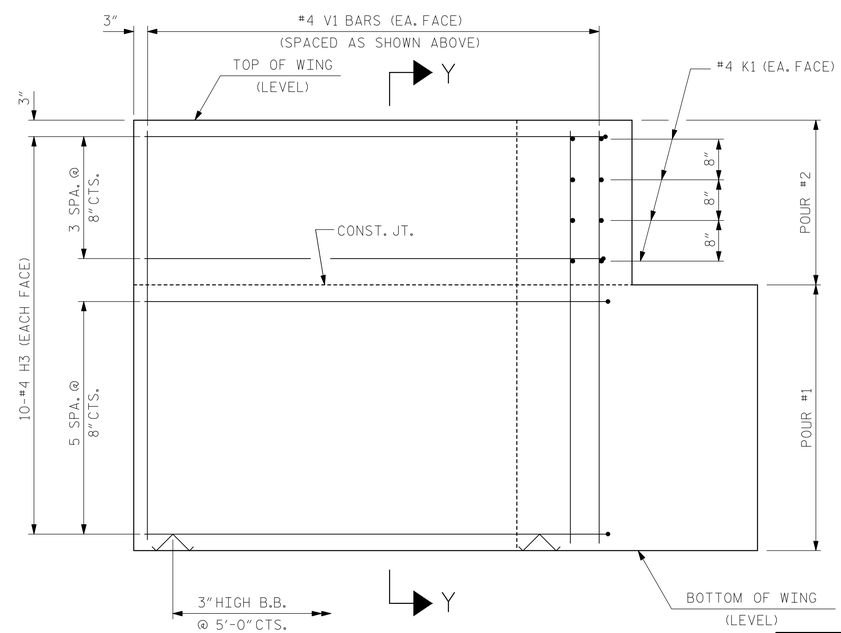

ELEVATION OF WING (W2)

PROJECT NO. 17BP.8.R.13

RANDOLPH COUNTY

STATION: 15+44.00 -L-

SHEET 3 OF 4

STATE OF NORTH CAROLINA
DEPARTMENT OF TRANSPORTATION
RALEIGH

SUBSTRUCTURE
END BENT
WING DETAILS

ASSEMBLED BY :	DJD	DATE :	1/13
CHECKED BY :	JCM	DATE :	1/13
DRAWN BY :	WJH	12/11	
CHECKED BY :	AAC	12/11	

WING DETAILS

KCI ASSOCIATES OF NC, P.A.
9741 SOUTHERN PINE BLVD
SUITE J
CHARLOTTE, NC 28273
704-499-9452
NC LICENSE No. C-0764

NORTH CAROLINA PROFESSIONAL SEAL 032954 ENGINEER JARED C. MEDLIN
6-4-13

REVISIONS							SHEET NO.
NO.	BY:	DATE:	NO.	BY:	DATE:		S-17
1			3				TOTAL SHEETS
2			4				24

STD. NO. EB_30_60S4

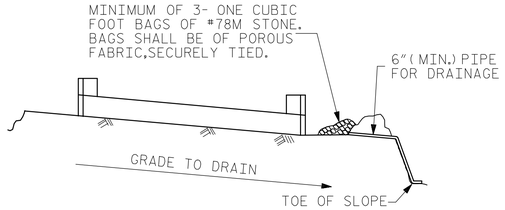

BAGGED STONE AND PIPE SHALL BE PLACED IMMEDIATELY AFTER COMPLETION OF END BENT EXCAVATION. PIPE MAY BE EITHER CONCRETE, CORRUGATED STEEL, CORRUGATED ALUMINUM ALLOY, OR CORRUGATED PLASTIC. PERFORATED PIPE WILL NOT BE ALLOWED.

BAGGED STONE SHALL REMAIN IN PLACE UNTIL THE ENGINEER DIRECTS THAT IT BE REMOVED. THE CONTRACTOR SHALL REMOVE AND DISPOSE OF SILT ACCUMULATIONS AT BAGGED STONE WHEN SO DIRECTED BY THE ENGINEER. BAGS SHALL BE REMOVED AND REPLACED WHENEVER THE ENGINEER DETERMINES THAT THEY HAVE DETERIORATED AND LOST THEIR EFFECTIVENESS.

NO SEPARATE PAYMENT WILL BE MADE FOR THIS WORK AND THE ENTIRE COST OF THIS WORK SHALL BE INCLUDED IN THE UNIT CONTRACT PRICE BID FOR THE SEVERAL PAY ITEMS.

TEMPORARY DRAINAGE AT END BENT

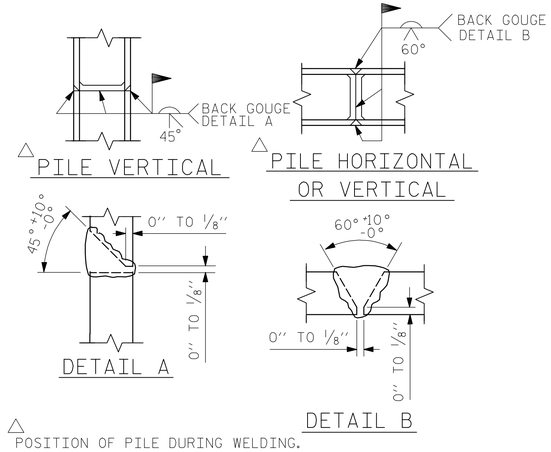

△ POSITION OF PILE DURING WELDING.

PILE SPLICE DETAILS

BAR TYPES

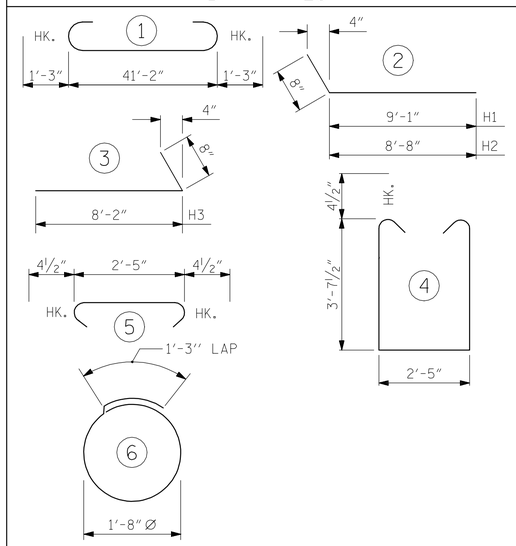

ALL BAR DIMENSIONS ARE OUT TO OUT.

END BENT No. 1	END BENT No. 2
HP 12 X 53 STEEL PILES	HP 12 X 53 STEEL PILES
NO: 5 LIN. FT.= 50	NO: 5 LIN. FT.= 50

BILL OF MATERIAL FOR ONE END BENT

BAR	NO.	SIZE	TYPE	LENGTH	WEIGHT
B1	8	#9	1	43'-8"	1188
B2	28	#4	STR	21'-11"	410
B3	11	#4	STR	2'-5"	18
D1	20	#6	STR	1'-6"	45
H1	10	#4	2	9'-9"	65
H2	10	#4	2	9'-4"	62
H3	20	#4	3	8'-10"	118
K1	16	#4	STR	3'-3"	35
S1	54	#4	4	10'-5"	376
S2	54	#4	5	3'-2"	114
S3	20	#4	6	6'-6"	87
V1	53	#4	STR	6'-2"	218

REINFORCING STEEL (FOR ONE END BENT) 2736 LBS.

CLASS A CONCRETE BREAKDOWN (FOR ONE END BENT)

POUR #1 CAP, LOWER PART OF WINGS & COLLARS 20.2 C.Y.

POUR #2 UPPER PART OF WINGS 2.2 C.Y.

TOTAL CLASS A CONCRETE 22.4 C.Y.

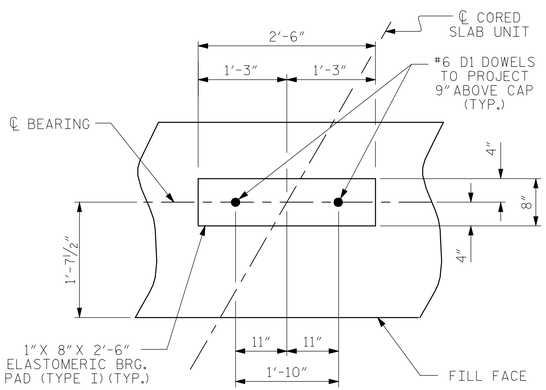

DETAIL "A"

(END BENT No. 1 SHOWN, END BENT No. 2 SIMILAR BY ROTATION)

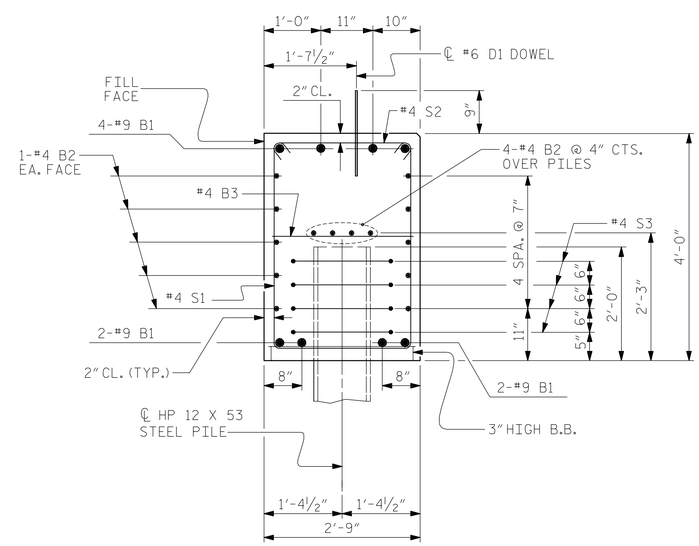

SECTION A-A

(CONCRETE COLLAR NOT SHOWN FOR CLARITY. SEE "CORROSION PROTECTION FOR STEEL PILES DETAIL.")

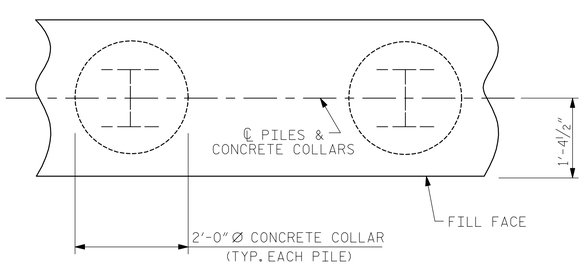

PLAN

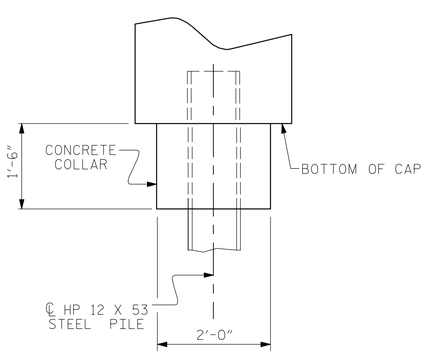

ELEVATION

CORROSION PROTECTION FOR STEEL PILES DETAIL

(END BENT No. 1 SHOWN, END BENT No. 2 SIMILAR BY ROTATION)

PROJECT NO. 17BP.8.R.13

RANDOLPH COUNTY

STATION: 15+44.00 -L-

SHEET 4 OF 4

STATE OF NORTH CAROLINA
DEPARTMENT OF TRANSPORTATION
RALEIGH

SUBSTRUCTURE

END BENT No. 1 & 2 DETAILS

KCI ASSOCIATES OF NC, P.A.
9741 SOUTHERN PINE BLVD
SUITE J
CHARLOTTE, NC 28273
704-499-9452
NC LICENSE No. C-0764

NORTH CAROLINA PROFESSIONAL SEAL 032954 ENGINEER JARED C. MEDLIN
6-4-13

ASSEMBLED BY : DJD	DATE : 1/13		
CHECKED BY : JCM	DATE : 1/13		
DRAWN BY : WJH 12/11			
CHECKED BY : AAC 12/11			

REVISIONS						SHEET NO.
NO.	BY:	DATE:	NO.	BY:	DATE:	S-18
1			3			TOTAL SHEETS
2			4			24

STD. NO. EB_30_60S4

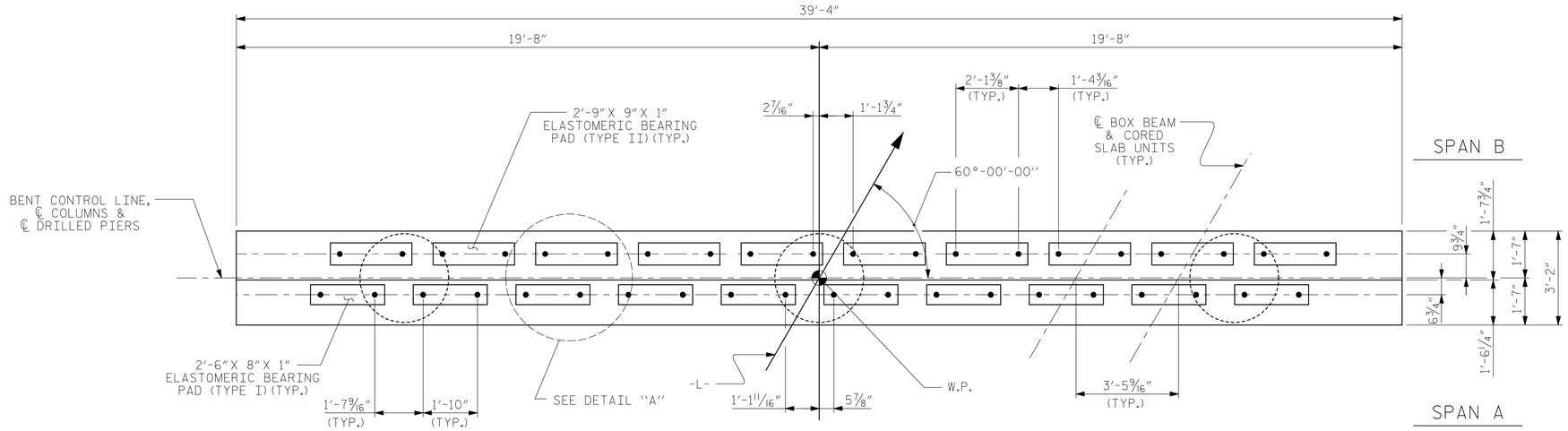

PLAN

① ALONG CAP

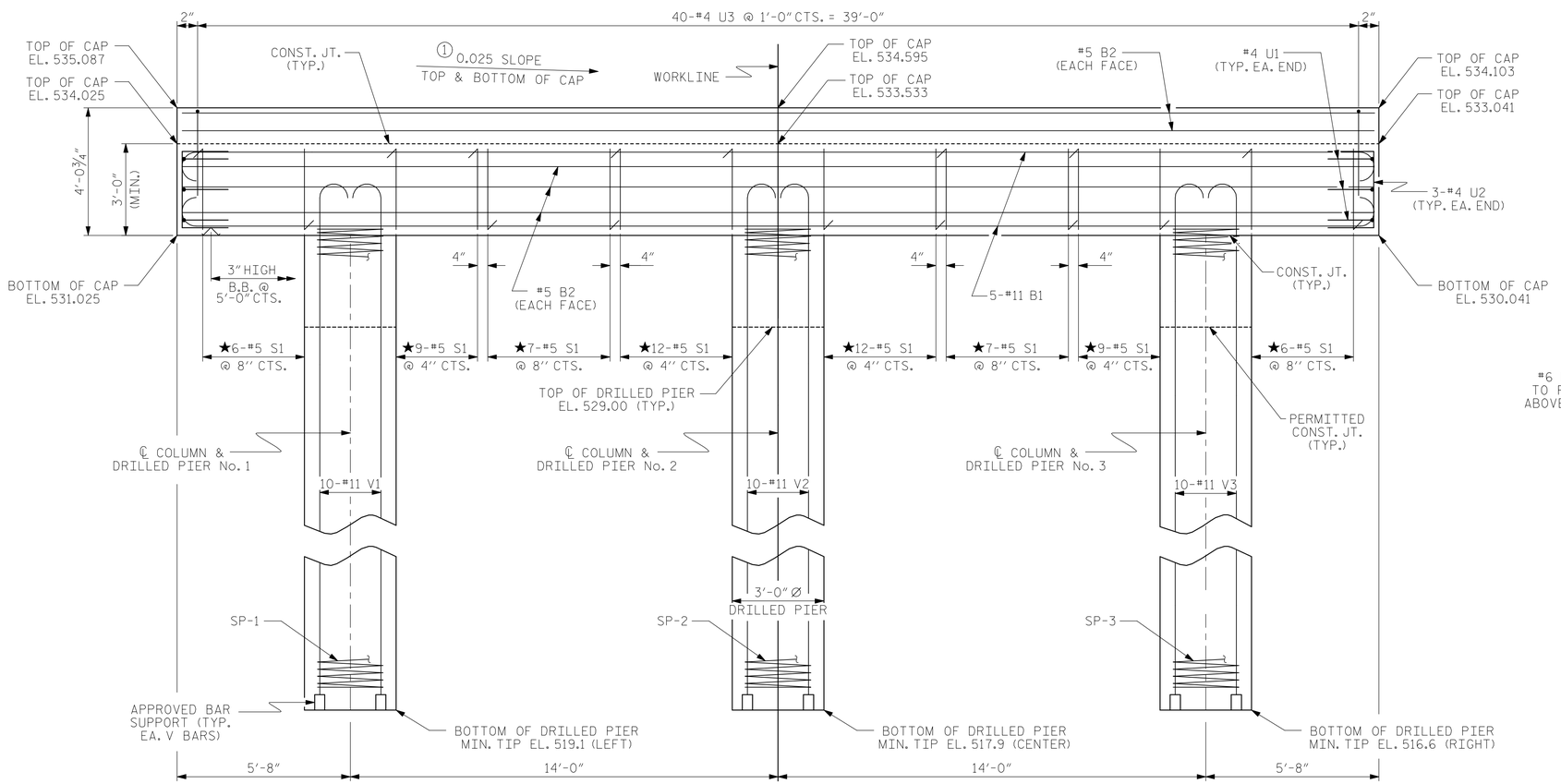

ELEVATION

DIMENSIONS & REINFORCING STEEL ARE TYPICAL FOR EACH COLUMN & DRILLED PIER UNLESS OTHERWISE NOTED.

NOTES

STIRRUPS IN CAP MAY BE SHIFTED AS NECESSARY TO CLEAR DOWELS.

HOOKS ON "V" BARS MAY BE TURNED AS NECESSARY FOR PLACING REINFORCING STEEL.

FOR DRILLED PIERS, SEE SPECIAL PROVISIONS.

ALL STEEL IN THE DRILLED PIERS IS INCLUDED IN THE PAY ITEMS FOR "REINFORCING STEEL" AND "SPIRAL COLUMN REINFORCING STEEL."

★ INVERT ALTERNATE STIRRUPS.

THE LOCATION OF THE CONSTRUCTION JOINT IN THE DRILLED PIERS IS BASED ON AN APPROXIMATE GROUND LINE ELEVATION. IF THE CONSTRUCTION JOINT IS ABOVE THE ACTUAL GROUND LINE ELEVATION, THE CONTRACTOR SHALL PLACE THE CONSTRUCTION JOINT ONE FOOT BELOW THE GROUND LINE.

FOR PERMANENT STEEL CASING, SEE DRILLED PIER SPECIAL PROVISIONS.

SPLICING OF LONGITUDINAL BARS IN THE DRILLED PIER WILL NOT BE PERMITTED.

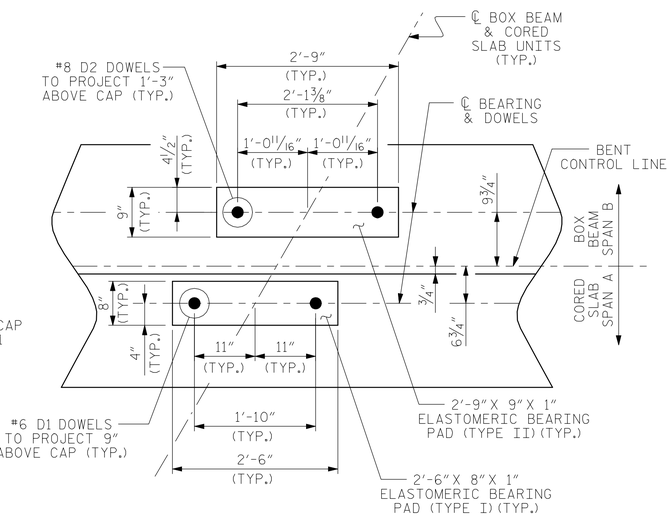

DETAIL "A"

(DIMENSIONS ARE TYPICAL EACH BEARING)

PROJECT NO. 17BP.8.R.13

RANDOLPH COUNTY

STATION: 15+44.00 -L-

SHEET 1 OF 2

STATE OF NORTH CAROLINA
DEPARTMENT OF TRANSPORTATION
RALEIGH

SUBSTRUCTURE

BENT No. 1

ASSEMBLED BY : DJD	DATE : 1/13
CHECKED BY : JCM	DATE : 1/13
DRAWN BY : DGE 03/10	
CHECKED BY : MKT 03/10	

KCI ASSOCIATES OF NC, P.A.
9741 SOUTHERN PINE BLVD
SUITE J
CHARLOTTE, NC 28273
704-499-9452
NC LICENSE No. C-0764

NORTH CAROLINA PROFESSIONAL SEAL 032954 ENGINEER JARED C. MEDLIN
6-4-13

REVISIONS						
NO.	BY:	DATE:	NO.	BY:	DATE:	
1			3			
2			4			

SHEET NO. S-19

TOTAL SHEETS 24

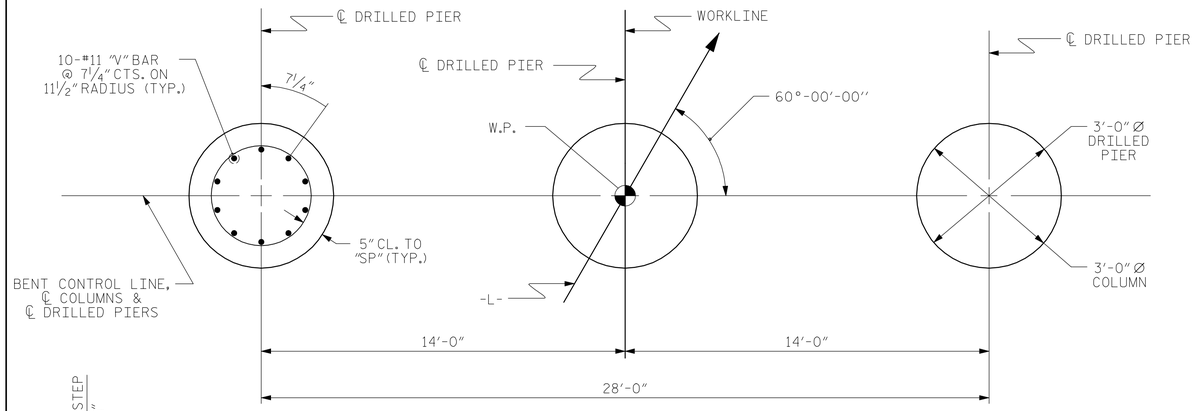

PLAN OF DRILLED PIERS & COLUMNS

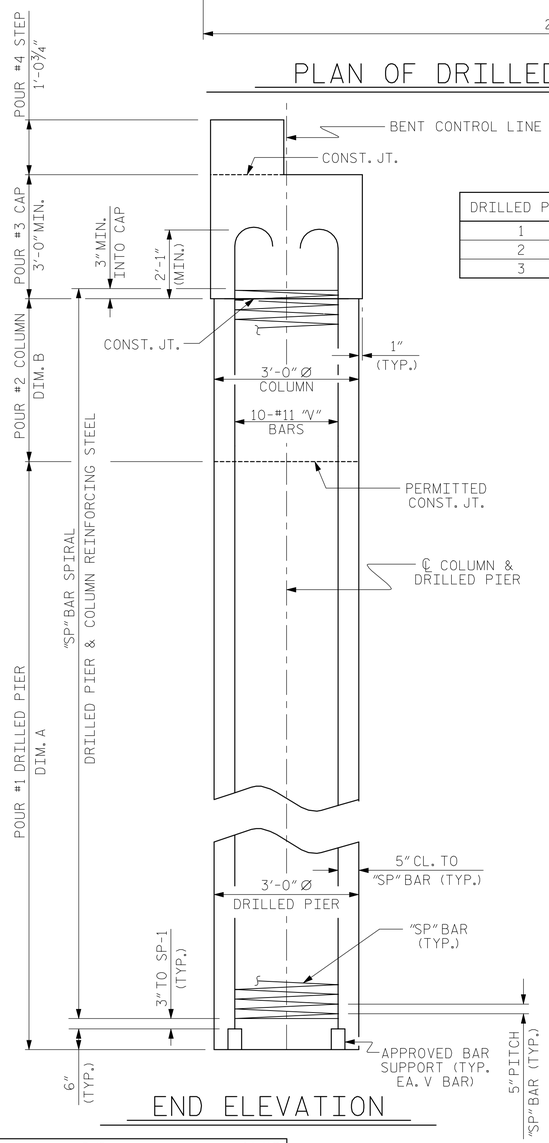

END ELEVATION

DRILLED PIER	DIM. A	DIM. B
1	9'-11"	1'-10"
2	11'-1"	1'-7"
3	12'-5"	1'-2"

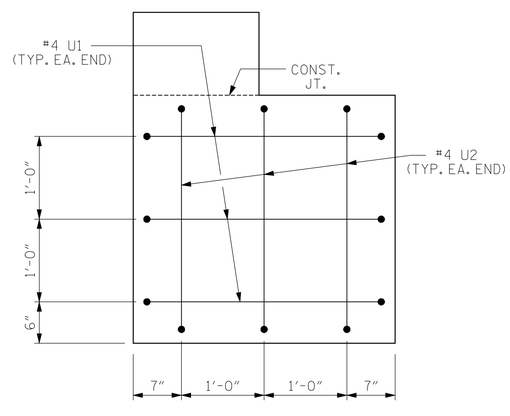

END OF CAP VIEW

(TYPICAL BOTH ENDS)

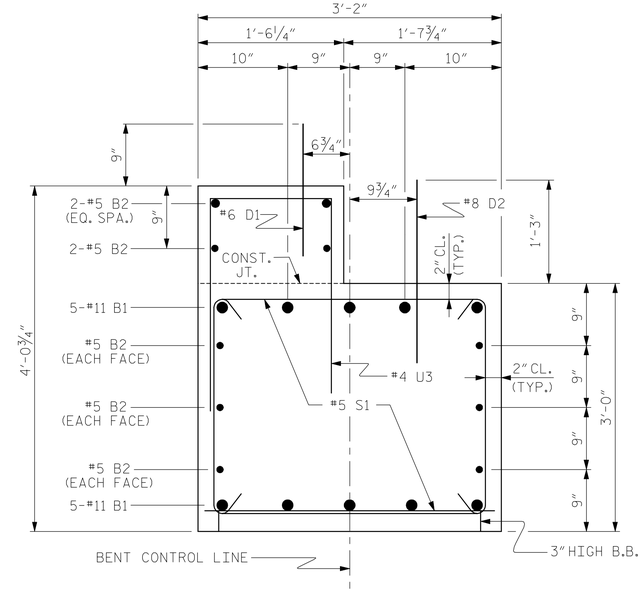

SECTION THRU CAP

BAR TYPES

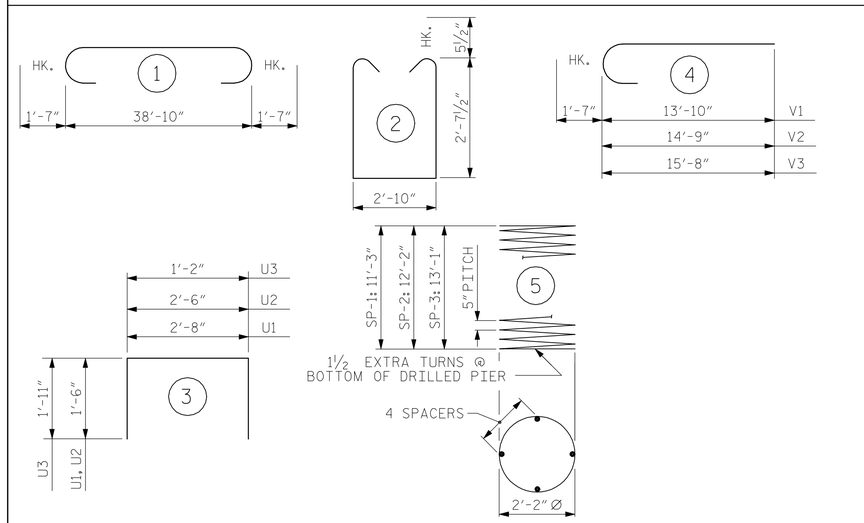

ALL BAR DIMENSIONS ARE OUT TO OUT

BILL OF MATERIAL FOR ONE BENT

BAR	NO.	SIZE	TYPE	LENGTH	WEIGHT
B1	10	#11	1	42'-0"	2231
B2	10	#5	STR	39'-0"	407
D1	20	#6	STR	1'-6"	45
D2	20	#8	STR	2'-3"	120
S1	68	#5	2	9'-0"	638
U1	6	#4	3	5'-8"	23
U2	6	#4	3	5'-6"	22
U3	40	#4	3	5'-0"	134
V1	10	#11	4	15'-5"	819
V2	10	#11	4	16'-4"	868
V3	10	#11	4	17'-3"	916
REINFORCING STEEL (FOR ONE BENT)					6223 LBS.
SP-1	1	✳	5	204'-4"	213
SP-2	1	✳	5	219'-3"	229
SP-3	1	✳	5	234'-3"	244
SPIRAL COLUMN REINFORCING STEEL (FOR ONE BENT)					686 LBS.

✳ THE "SP" SPIRAL REINFORCING STEEL SHALL BE W31 OR D-31 COLD DRAWN WIRE OR #5 PLAIN OR DEFORMED BAR

CLASS A CONCRETE BREAKDOWN (FOR ONE BENT)

POUR #2 (COLUMNS)	1.2 C.Y.
POUR #3 (CAP)	13.8 C.Y.
POUR #4 (STEP)	2.4 C.Y.
TOTAL CLASS A CONCRETE	17.4 C.Y.

DRILLED PIERS: (FOR ONE BENT)

DRILLED PIER CONCRETE
POUR #1 (DRILLED PIERS) 8.7 C.Y.

3'-0" Ø DRILLED PIER NOT IN SOIL 22 LIN. FT.

3'-0" Ø DRILLED PIER IN SOIL 11.4 LIN. FT.

CSL TUBES 133.7 LIN. FT.

PROJECT NO. 17BP.8.R.13
RANDOLPH COUNTY
STATION: 15+44.00 -L-

SHEET 2 OF 2

STATE OF NORTH CAROLINA
DEPARTMENT OF TRANSPORTATION
RALEIGH

SUBSTRUCTURE
BENT NO.1
DETAILS

ASSEMBLED BY : DJD	DATE : 01/13		
CHECKED BY : JCM	DATE : 01/13		
DRAWN BY : DGE 03/10			
CHECKED BY : MKT 03/10			

KCI ASSOCIATES OF NC, P.A.
9741 SOUTHERN PINE BLVD
SUITE J
CHARLOTTE, NC 28273
704-499-9452
NC LICENSE No. C-0764

NORTH CAROLINA PROFESSIONAL SEAL 032954 ENGINEER JARED C. MEDLIN
6-4-13

REVISIONS						SHEET NO.
NO.	BY:	DATE:	NO.	BY:	DATE:	S-20
1			3			TOTAL SHEETS
2			4			24

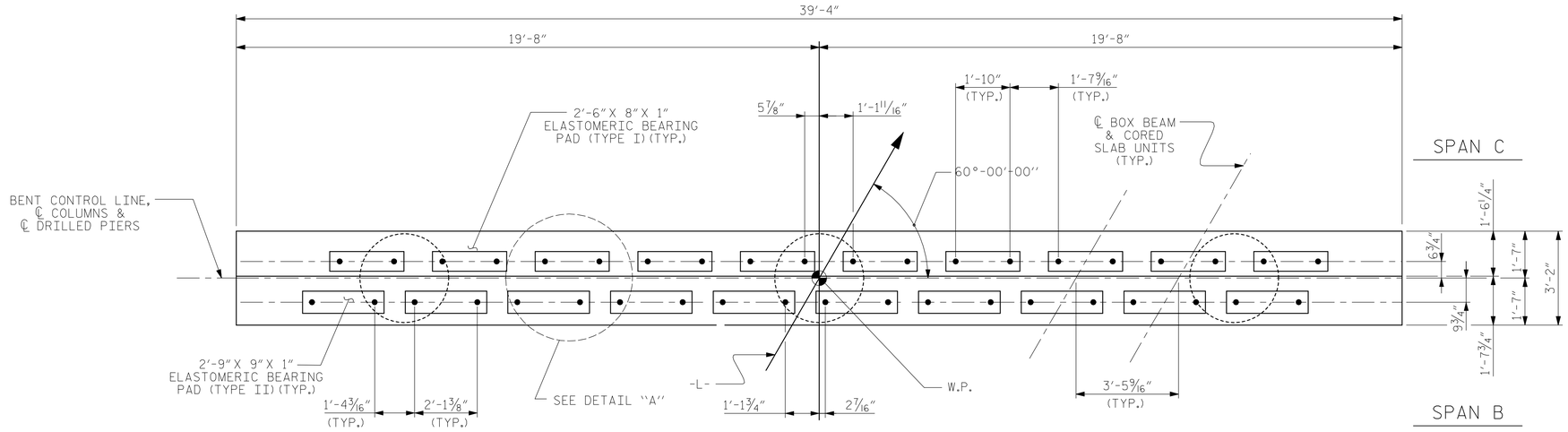

PLAN

① ALONG CAP

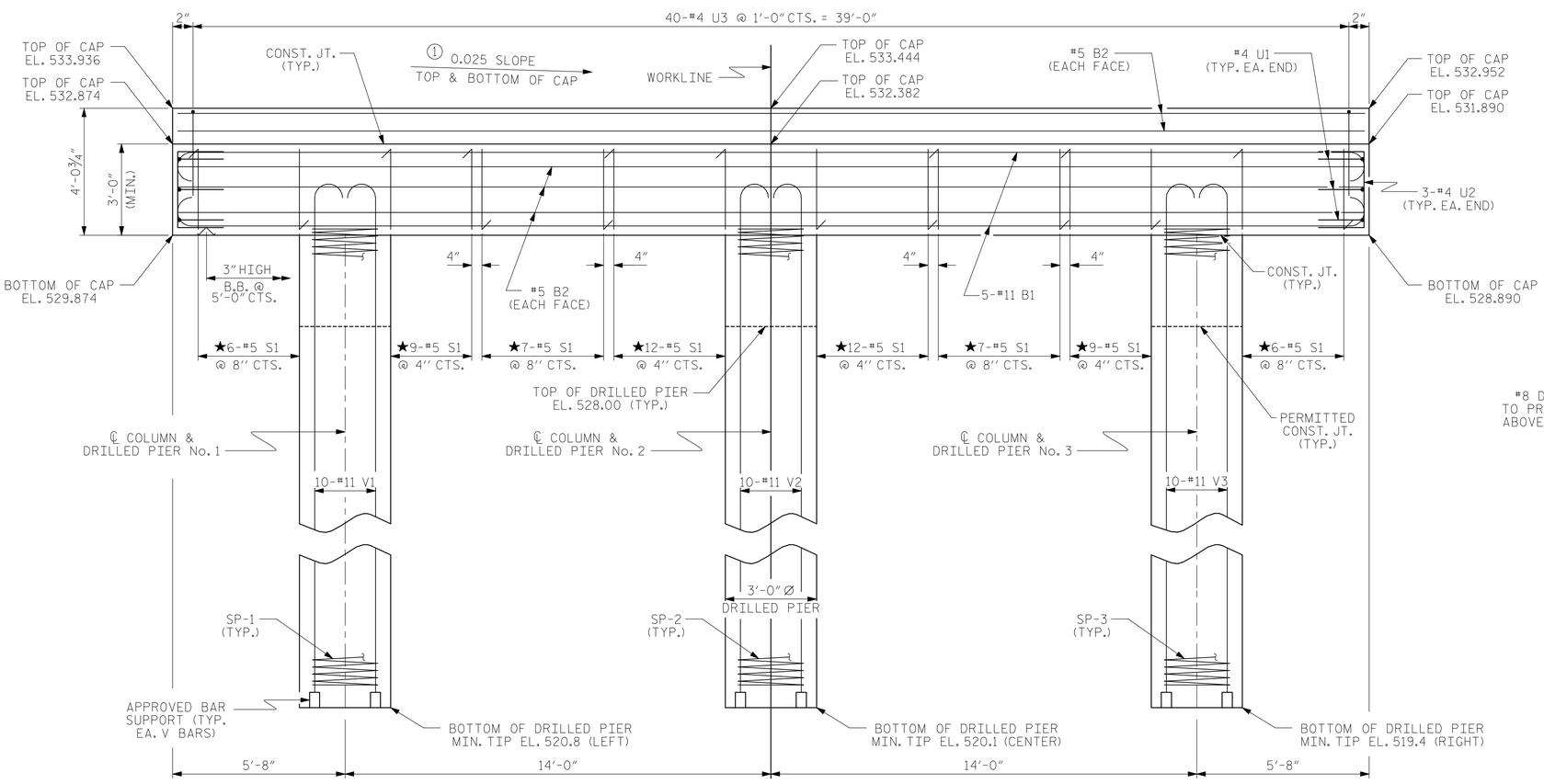

ELEVATION

DIMENSIONS & REINFORCING STEEL ARE TYPICAL FOR EACH COLUMN & DRILLED PIER UNLESS OTHERWISE NOTED.

NOTES

STIRRUPS IN CAP MAY BE SHIFTED AS NECESSARY TO CLEAR DOWELS.

HOOKS ON "V" BARS MAY BE TURNED AS NECESSARY FOR PLACING REINFORCING STEEL.

FOR DRILLED PIERS, SEE SPECIAL PROVISIONS.

ALL STEEL IN THE DRILLED PIERS IS INCLUDED IN THE PAY ITEMS FOR "REINFORCING STEEL" AND "SPIRAL COLUMN REINFORCING STEEL."

★ INVERT ALTERNATE STIRRUPS.

THE LOCATION OF THE CONSTRUCTION JOINT IN THE DRILLED PIERS IS BASED ON AN APPROXIMATE GROUND LINE ELEVATION. IF THE CONSTRUCTION JOINT IS ABOVE THE ACTUAL GROUND LINE ELEVATION, THE CONTRACTOR SHALL PLACE THE CONSTRUCTION JOINT ONE FOOT BELOW THE GROUND LINE.

FOR PERMANENT STEEL CASING, SEE DRILLED PIER SPECIAL PROVISIONS.

SPLICING OF LONGITUDINAL BARS IN THE DRILLED PIER WILL NOT BE PERMITTED.

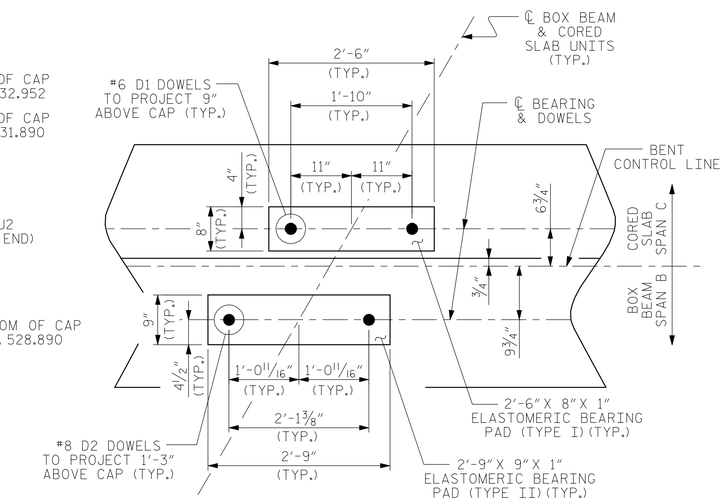

DETAIL "A"

(DIMENSIONS ARE TYPICAL EACH BEARING)

PROJECT NO. 17BP.8.R.13

RANDOLPH COUNTY

STATION: 15+44.00 -L-

SHEET 1 OF 2

STATE OF NORTH CAROLINA
DEPARTMENT OF TRANSPORTATION
RALEIGH

SUBSTRUCTURE

BENT No. 2

ASSEMBLED BY : DJD	DATE : 1/13		
CHECKED BY : JCM	DATE : 1/13		
DRAWN BY : DGE 03/10			
CHECKED BY : MKT 03/10			

KCI ASSOCIATES OF NC
KCI ASSOCIATES OF NC, P.A.
9741 SOUTHERN PINE BLVD
SUITE J
CHARLOTTE, NC 28273
704-499-9452
NC LICENSE No. C-0764

NORTH CAROLINA PROFESSIONAL SEAL 032954 ENGINEER JARED C. MEDLIN
6-4-13

REVISIONS						SHEET NO.
NO.	BY:	DATE:	NO.	BY:	DATE:	S-21
1			3			TOTAL SHEETS
2			4			24

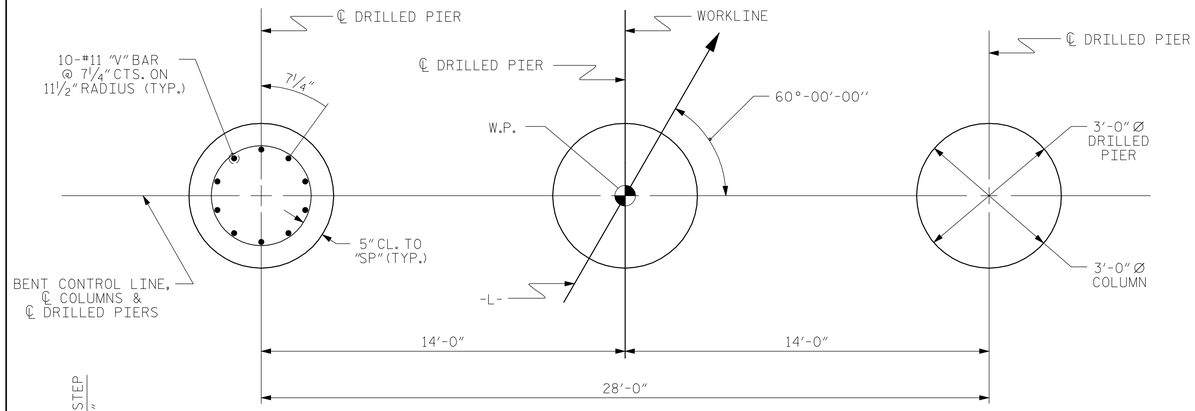

PLAN OF DRILLED PIERS & COLUMNS

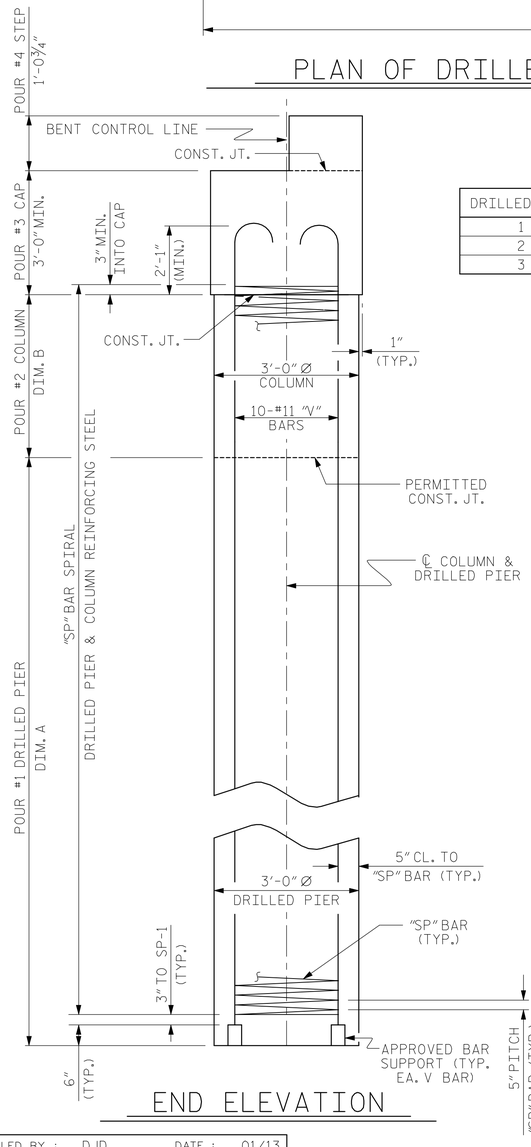

END ELEVATION

DRILLED PIER	DIM. A	DIM. B
1	7'-2"	1'-9"
2	7'-11"	1'-4"
3	8'-8"	1'-0"

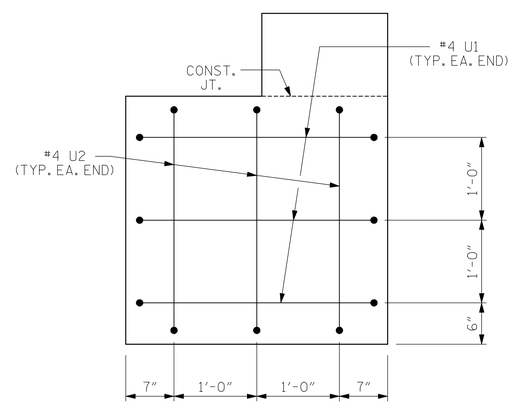

END OF CAP VIEW

(TYPICAL BOTH ENDS)

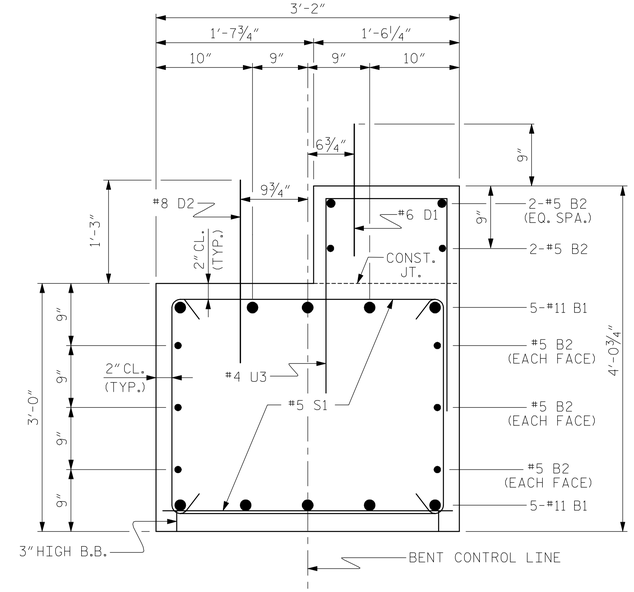

SECTION THRU CAP

BAR TYPES

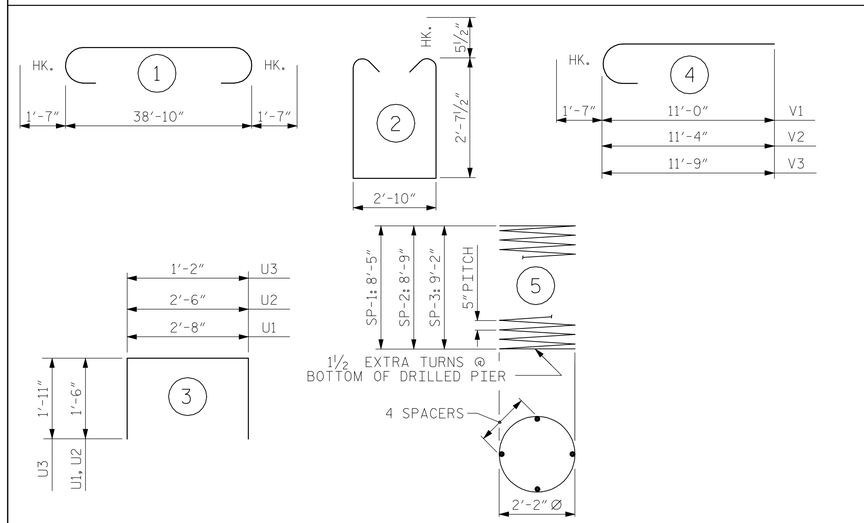

ALL BAR DIMENSIONS ARE OUT TO OUT

BILL OF MATERIAL FOR ONE BENT

BAR	NO.	SIZE	TYPE	LENGTH	WEIGHT
B1	10	#11	1	42'-0"	2231
B2	10	#5	STR	39'-0"	407
D1	20	#6	STR	1'-6"	45
D2	20	#8	STR	2'-3"	120
S1	68	#5	2	9'-0"	638
U1	6	#4	3	5'-8"	23
U2	6	#4	3	5'-6"	22
U3	40	#4	3	5'-0"	134
V1	10	#11	4	12'-7"	668
V2	10	#11	4	12'-11"	686
V3	10	#11	4	13'-4"	708
REINFORCING STEEL (FOR ONE BENT)					5519 LBS.
SP-1	1	✳	5	158'-0"	165
SP-2	1	✳	5	163'-5"	170
SP-3	1	✳	5	170'-3"	178
SPIRAL COLUMN REINFORCING STEEL (FOR ONE BENT)					513 LBS.

✳ THE "SP" SPIRAL REINFORCING STEEL SHALL BE W31 OR D-31 COLD DRAWN WIRE OR #5 PLAIN OR DEFORMED BAR

CLASS A CONCRETE BREAKDOWN (FOR ONE BENT)

POUR #2 (COLUMNS)	1.1 C.Y.
POUR #3 (CAP)	13.8 C.Y.
POUR #4 (STEP)	2.4 C.Y.
TOTAL CLASS A CONCRETE	17.3 C.Y.

DRILLED PIERS: (FOR ONE BENT)

DRILLED PIER CONCRETE
POUR #1 (DRILLED PIERS) 6.2 C.Y.

3'-0" Ø DRILLED PIER NOT IN SOIL 23.8 LIN. FT.

3'-0" Ø DRILLED PIER IN SOIL 0 LIN. FT.

CSL TUBES 95 LIN. FT.

PROJECT NO. 17BP.8.R.13
RANDOLPH COUNTY
STATION: 15+44.00 -L-

SHEET 2 OF 2

STATE OF NORTH CAROLINA
DEPARTMENT OF TRANSPORTATION
RALEIGH

SUBSTRUCTURE
BENT NO.2
DETAILS

ASSEMBLED BY : DJD	DATE : 01/13		
CHECKED BY : JCM	DATE : 01/13		
DRAWN BY : DGE 03/10			
CHECKED BY : MKT 03/10			

KCI ASSOCIATES OF NC, P.A.
9741 SOUTHERN PINE BLVD
SUITE J
CHARLOTTE, NC 28273
704-499-9452
NC LICENSE No. C-0764

SEAL 032954 PROFESSIONAL ENGINEER JARED C. MEDLIN
6-4-13

REVISIONS						
NO.	BY:	DATE:	NO.	BY:	DATE:	SHEET NO. S-22
1			3			TOTAL SHEETS 24
2			4			

NOTES :

FOR BERM WIDTH DIMENSIONS, SEE GENERAL DRAWING.

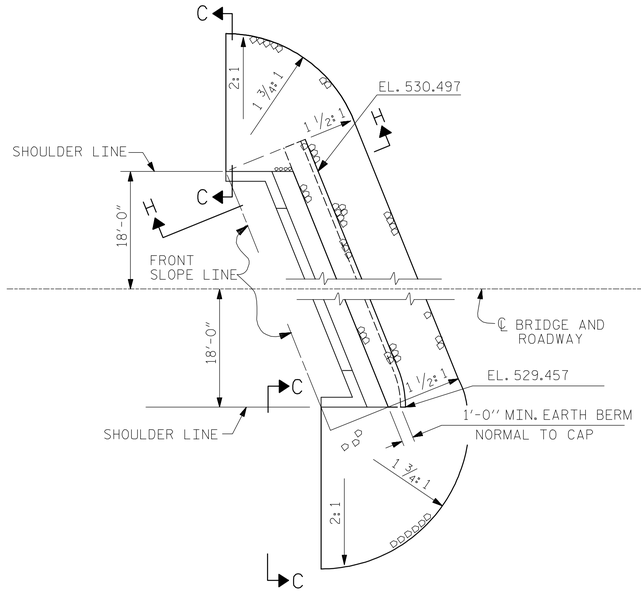

END BENT 1

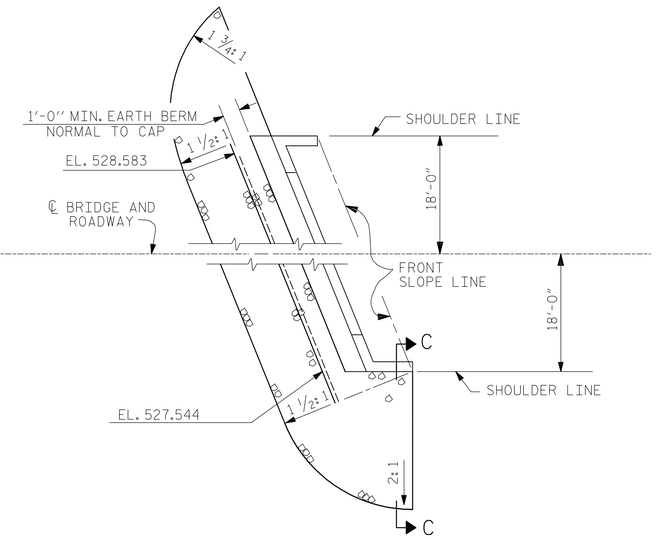

END BENT 2

ESTIMATED QUANTITIES		
BRIDGE @ STA. 15+44.00 -L-	RIP RAP CLASS II (2'-0" THICK)	FILTER FABRIC FOR DRAINAGE
	TONS	SQUARE YARDS
END BENT 1	87	97
END BENT 2	87	97

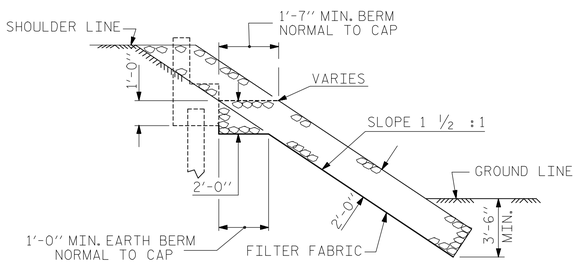

SECTION H-H

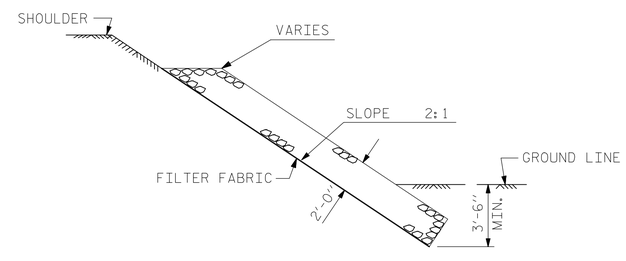

SECTION C-C

PROJECT NO. 17BP.8.R.13

RANDOLPH COUNTY

STATION: 15+44.00 -L-

STATE OF NORTH CAROLINA
DEPARTMENT OF TRANSPORTATION
RALEIGH

STANDARD

RIP RAP DETAILS

ASSEMBLED BY : JCM	DATE : 08/12
CHECKED BY : JDF	DATE : 08/12

DRAWN BY : REK 1/84	REV. 5/1/06R	TLA/GM
CHECKED BY : RDU 1/84	REV. 10/1/11	MAA/GM
	REV. 12/21/11	MAA/GM

KCI ASSOCIATES OF NC

KCI ASSOCIATES OF NC, P.A.
9741 SOUTHERN PINE BLVD
SUITE J
CHARLOTTE, NC 28273
704-499-9452
NC LICENSE No. C-0764

NORTH CAROLINA PROFESSIONAL SEAL 032954 ENGINEER JARED C. MEDLIN
6-4-13

REVISIONS						SHEET NO.
NO.	BY:	DATE:	NO.	BY:	DATE:	S-23
1			3			TOTAL SHEETS
2			4			24

STD. NO. RR2

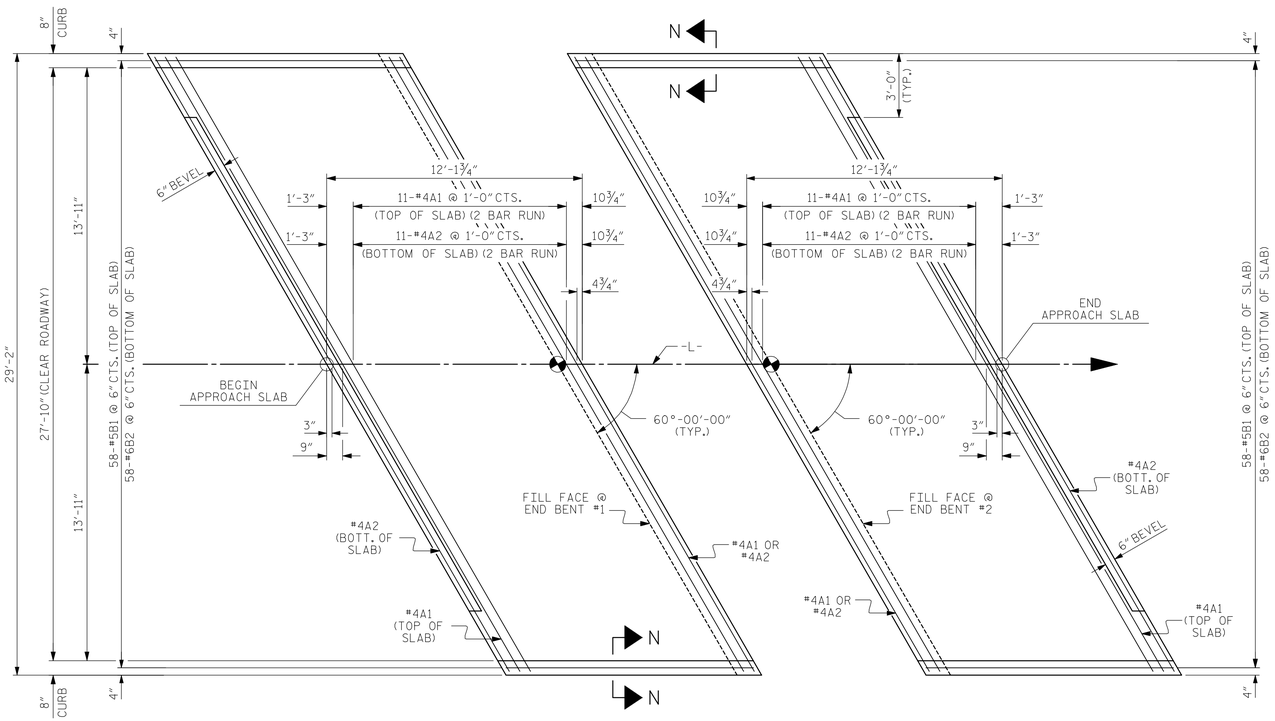

PLAN @ END BENT #1

PLAN @ END BENT #2

DIMENSIONS SHOWN ARE TYPICAL FOR BOTH APPROACH SLABS

NOTES

FOR BRIDGE APPROACH FILL INCLUDING GEOTEXTILE, 4" Ø DRAINAGE PIPE, AND #78M STONE BACKFILL, SEE ROADWAY PLANS.

GEOTEXTILE SHALL BE TYPE 1IN ACCORDANCE WITH THE STANDARD SPECIFICATIONS SECTION 1056.

#78M STONE BACKFILL (CLASS V SELECT MATERIAL) SHALL BE IN ACCORDANCE WITH STANDARD SPECIFICATIONS SECTION 1016.

#78M STONE BACKFILL IS TO BE CONTINUOUS ALONG FILL FACE OF BACKWALL FROM OUTSIDE EDGE TO OUTSIDE EDGE OF APPROACH SLAB.

FOR THE 4" Ø DRAINAGE PIPE OUTLET(S), SEE ROADWAY STANDARD DRAWINGS.

AREA BETWEEN THE WINGWALL AND APPROACH SLAB SHALL BE GRADED TO DRAIN THE WATER AWAY FROM THE FILL FACE OF THE BRIDGE AND SHALL BE PAVED. SEE ROADWAY PLANS.

APPROACH SLAB GROOVING IS NOT REQUIRED.

BILL OF MATERIAL

APPROACH SLAB AT EB #1

BAR	NO.	SIZE	TYPE	LENGTH	WEIGHT
* A1	26	#4	STR	17'-8"	307
A2	26	#4	STR	17'-7"	305
* B1	58	#5	STR	11'-1"	670
B2	58	#6	STR	11'-7"	1009
REINFORCING STEEL				LBS.	1314
* EPOXY COATED REINFORCING STEEL				LBS.	977
CLASS AA CONCRETE				C. Y.	17.1

APPROACH SLAB AT EB #2

BAR	NO.	SIZE	TYPE	LENGTH	WEIGHT
* A1	26	#4	STR	17'-8"	307
A2	26	#4	STR	17'-7"	305
* B1	58	#5	STR	11'-1"	670
B2	58	#6	STR	11'-7"	1009
REINFORCING STEEL				LBS.	1314
* EPOXY COATED REINFORCING STEEL				LBS.	977
CLASS AA CONCRETE				C. Y.	17.1

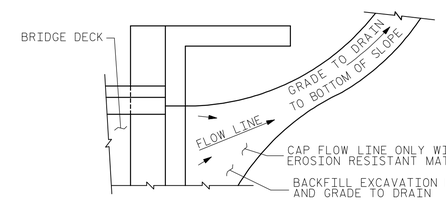

NOTE: IF THE APPROACH SLAB IS NOT CONSTRUCTED IMMEDIATELY AFTER THE BACKFILLING OF THE END BENT EXCAVATION, GRADE TO DRAIN TO THE BOTTOM OF THE SLOPE AND PROVIDE EROSION RESISTANT MATERIAL, SUCH AS FIBERGLASS ROVING OR AS DIRECTED BY THE ENGINEER TO PREVENT SOIL EROSION AND TO PROTECT THE AREA ADJACENT TO THE STRUCTURE. THE CONTRACTOR WILL BE REQUIRED TO REMOVE THESE MATERIALS PRIOR TO CONSTRUCTION OF THE APPROACH SLAB.

TEMPORARY DRAINAGE DETAIL

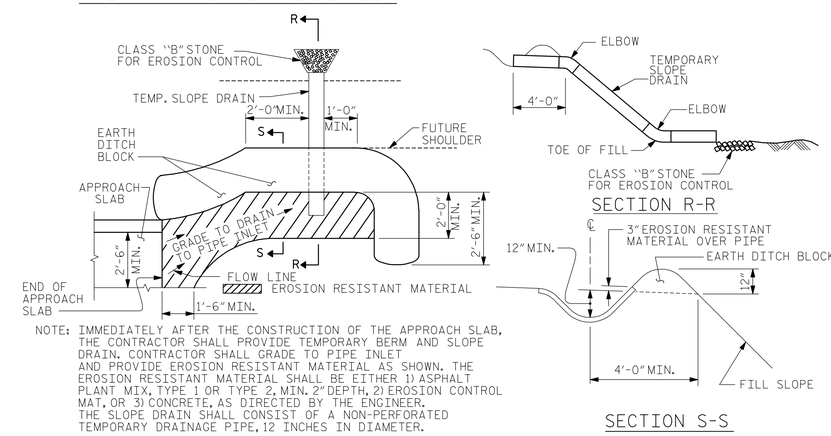

NOTE: IMMEDIATELY AFTER THE CONSTRUCTION OF THE APPROACH SLAB, THE CONTRACTOR SHALL PROVIDE TEMPORARY BERM AND SLOPE DRAIN. CONTRACTOR SHALL GRADE TO PIPE INLET AND PROVIDE EROSION RESISTANT MATERIAL AS SHOWN. THE EROSION RESISTANT MATERIAL SHALL BE EITHER 1) ASPHALT PLANT MIX, TYPE 1 OR TYPE 2, MIN. 2" DEPTH, 2) EROSION CONTROL MAT, OR 3) CONCRETE, AS DIRECTED BY THE ENGINEER. THE SLOPE DRAIN SHALL CONSIST OF A NON-PERFORATED TEMPORARY DRAINAGE PIPE, 12 INCHES IN DIAMETER.

PLAN VIEW

TEMPORARY BERM AND SLOPE DRAIN DETAILS

(TO BE USED WHEN SHOULDER BERM GUTTER IS REQUIRED)

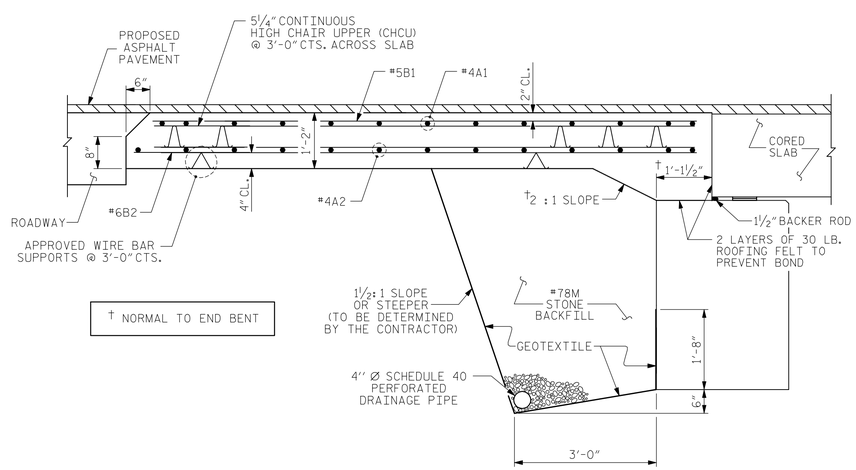

† NORMAL TO END BENT

SECTION THRU SLAB

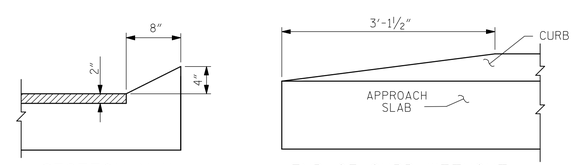

SECTION N-N

END OF CURB WITHOUT SHOULDER BERM GUTTER

CURB DETAILS

PROJECT NO. 17BP.8.R.13

RANDOLPH COUNTY

STATION: 15+44.00 -L-

SPLICE LENGTHS		
BAR SIZE	EPOXY COATED	UNCOATED
#4	2'-0"	1'-9"
#5	2'-6"	2'-2"
#6	3'-10"	2'-7"

KCI ASSOCIATES OF NC, P.A.
9741 SOUTHERN PINE BLVD
SUITE J
CHARLOTTE, NC 28273
704-499-9452
NC LICENSE No. C-0764

NORTH CAROLINA PROFESSIONAL SEAL 032954 ENGINEER JARED C. MEDLIN 6-4-13

STATE OF NORTH CAROLINA
DEPARTMENT OF TRANSPORTATION
RALEIGH

STANDARD
BRIDGE APPROACH SLAB
FOR PRESTRESSED CONCRETE
CORED SLAB UNIT
(SUB-REGIONAL TIER)
60° SKEW

REVISIONS							SHEET NO.
NO.	BY:	DATE:	NO.	BY:	DATE:		S-24
1			3				TOTAL SHEETS
2			4				24

ASSEMBLED BY :	DJD	DATE :	08/12
CHECKED BY :	JCM	DATE :	08/12
DRAWN BY : SHS/MAA 5-09	REV. 12-11	MAA/AAC	
CHECKED BY : BCH 5-09			

STD. NO. BAS_30_60S

STANDARD NOTES

DESIGN DATA:

SPECIFICATIONS	A.A.S.H.T.O. (CURRENT)
LIVE LOAD	SEE PLANS
IMPACT ALLOWANCE	SEE A.A.S.H.T.O.
STRESS IN EXTREME FIBER OF	
STRUCTURAL STEEL - AASHTO M270 GRADE 36	20,000 LBS. PER SQ. IN.
- AASHTO M270 GRADE 50W	27,000 LBS. PER SQ. IN.
- AASHTO M270 GRADE 50	27,000 LBS. PER SQ. IN.
REINFORCING STEEL IN TENSION	
GRADE 60	24,000 LBS. PER SQ. IN.
CONCRETE IN COMPRESSION	1,200 LBS. PER SQ. IN.
CONCRETE IN SHEAR	SEE A.A.S.H.T.O.
STRUCTURAL TIMBER - TREATED OR	
UNTREATED - EXTREME FIBER STRESS	1,800 LBS. PER SQ. IN.
COMPRESSION PERPENDICULAR TO GRAIN OF TIMBER	375 LBS. PER SQ. IN.
EQUIVALENT FLUID PRESSURE OF EARTH	30 LBS. PER CU. FT. (MINIMUM)

MATERIAL AND WORKMANSHIP:

EXCEPT AS MAY OTHERWISE BE SPECIFIED ON PLANS OR IN THE SPECIAL PROVISIONS, ALL MATERIAL AND WORKMANSHIP SHALL BE IN ACCORDANCE WITH THE 2012 "STANDARD SPECIFICATIONS FOR ROADS AND STRUCTURES" OF THE N. C. DEPARTMENT OF TRANSPORTATION.

STEEL SHEET PILING FOR PERMANENT OR TEMPORARY APPLICATIONS SHALL BE HOT ROLLED.

CONCRETE:

UNLESS OTHERWISE REQUIRED ON PLANS, CLASS A CONCRETE SHALL BE USED FOR ALL PORTIONS OF ALL STRUCTURES WITH THE EXCEPTION THAT: CLASS AA CONCRETE SHALL BE USED IN BRIDGE SUPERSTRUCTURES, ABUTMENT BACKWALLS, AND APPROACH SLABS; AND CLASS B CONCRETE SHALL BE USED FOR SLOPE PROTECTION AND RIP RAP.

CONCRETE CHAMFERS:

UNLESS OTHERWISE NOTED ON THE PLANS, ALL EXPOSED CORNERS ON STRUCTURES SHALL BE CHAMFERED 3/4" WITH THE FOLLOWING EXCEPTIONS: TOP CORNERS OF CURBS MAY BE ROUNDED TO 1-1/2" RADIUS WHICH IS BUILT INTO CURB FORMS; CORNERS OF TRANSVERSE FLOOR EXPANSION JOINTS SHALL BE ROUNDED WITH A 1/4" FINISHING TOOL UNLESS OTHERWISE REQUIRED ON PLANS; AND CORNERS OF EXPANSION JOINTS IN THE ROADWAY FACES AND TOPS OF CURBS AND SIDEWALKS SHALL BE ROUNDED TO A 1/4" RADIUS WITH A FINISHING STONE OR TOOL UNLESS OTHERWISE REQUIRED ON PLANS.

DOWELS:

DOWELS WHEN INDICATED ON PLANS AS FOR CULVERT EXTENSIONS, SHALL BE EMBEDDED AT LEAST 12" INTO THE OLD CONCRETE AND GROUTED INTO PLACE WITH 1:2 CEMENT MORTAR.

ALLOWANCE FOR DEAD LOAD DEFLECTION, SETTLEMENT, ETC. IN CASTING SUPERSTRUCTURES:

BRIDGES SHALL BE BUILT ON THE GRADE OR VERTICAL CURVE SHOWN ON PLANS. SLABS, CURBS AND PARAPETS SHALL CONFORM TO THE GRADE OR CURVE.

ALL DIMENSIONS WHICH ARE GIVEN IN SECTION AND ARE AFFECTED BY DEAD LOAD DEFLECTIONS ARE DIMENSIONS AT CENTER LINE OF BEARING UNLESS OTHERWISE NOTED ON PLANS. IN SETTING FORMS FOR STEEL BEAM BRIDGES AND PRESTRESSED CONCRETE GIRDER BRIDGES, ADJUSTMENTS SHALL BE MADE DUE TO THE DEAD LOAD DEFLECTIONS FOR THE ELEVATIONS SHOWN. WHERE BLOCKS ARE SHOWN OVER BEAMS FOR BUILDING UP TO THE SLAB, THE VERTICAL DIMENSIONS OF THE BLOCKS SHALL BE ADJUSTED BETWEEN BEARINGS TO COMPENSATE FOR DEAD LOAD DEFLECTIONS, VERTICAL CURVE ORDINATE, AND ACTUAL BEAM CAMBER. WHERE BOTTOM OF SLAB IS IN LINE WITH BOTTOM OF TOP FLANGES, DEPTH OF SLAB BETWEEN BEARINGS SHALL BE ADJUSTED TO COMPENSATE FOR DEAD LOAD DEFLECTION, VERTICAL CURVE ORDINATE, AND ACTUAL BEAM CAMBER.

IN SETTING FALSEWORK AND FORMS FOR REINFORCED CONCRETE SPANS, AN ALLOWANCE SHALL BE MADE FOR DEAD LOAD DEFLECTIONS, SETTLEMENT OF FALSEWORK, AND PERMANENT CAMBER WHICH SHALL BE PROVIDED FOR IN ADDITION TO THE ELEVATIONS SHOWN. AFTER REMOVAL OF THE FALSEWORK, THE FINISHED STRUCTURES SHALL CONFORM TO THE PROFILE AND ELEVATIONS SHOWN ON THE PLANS AND CONSTRUCTION ELEVATIONS FURNISHED BY THE ENGINEER.

DETAILED DRAWINGS FOR FALSEWORK OR FORMS FOR BRIDGE SUPERSTRUCTURE AND ANY STRUCTURE OR PARTS OF A STRUCTURE AS NOTED ON THE PLANS SHALL BE SUBMITTED TO THE ENGINEER FOR APPROVAL BEFORE CONSTRUCTION OF THE FALSEWORK OR FORMS IS STARTED.

REINFORCING STEEL:

ALL REINFORCING STEEL SHALL BE DEFORMED. DIMENSIONS RELATIVE TO PLACEMENT OF REINFORCING ARE TO CENTERS OF BARS UNLESS OTHERWISE INDICATED IN THE PLANS. DIMENSIONS ON BAR DETAILS ARE TO CENTERS OF BARS OR ARE OUT TO OUT AS INDICATED ON PLANS.

WIRE BAR SUPPORTS SHALL BE PROVIDED FOR REINFORCING STEEL WHERE INDICATED ON THE PLANS. WHEN BAR SUPPORT PIECES ARE PLACED IN CONTINUOUS LINES, THEY SHALL BE SO PLACED THAT THE ENDS OF THE SUPPORTING WIRES SHALL BE LAPPED TO LOCK LEGS ON ADJOINING PIECES.

STRUCTURAL STEEL:

AT THE CONTRACTOR'S OPTION, HE MAY SUBSTITUTE 7/8" Ø SHEAR STUDS FOR THE 3/4" Ø STUDS SPECIFIED ON THE PLANS. THIS SUBSTITUTION SHALL BE MADE AT THE RATE OF 3 - 7/8" Ø STUDS FOR 4 - 3/4" Ø STUDS, AND STUD SPACING CHANGES SHALL BE MADE AS NECESSARY TO PROVIDE THE SAME EQUIVALENT NUMBER OF 7/8" Ø STUDS ALONG THE BEAM AS SHOWN FOR 3/4" Ø STUDS BASED ON THE RATIO OF 3 - 7/8" Ø STUDS FOR 4 - 3/4" Ø STUDS. STUDS OF THE LENGTH SPECIFIED ON THE PLANS MUST BE PROVIDED. THE MAXIMUM SPACING SHALL BE 2'-0".

EXCEPT AT THE INTERIOR SUPPORTS OF CONTINUOUS BEAMS WHERE THE COVER PLATE IS IN CONTACT WITH BEARING PLATE, THE CONTRACTOR MAY, AT HIS OPTION, SUBSTITUTE FOR THE COVER PLATES DESIGNATED ON THE PLANS COVER PLATES OF THE EQUIVALENT AREA PROVIDED THESE PLATES ARE AT LEAST 5/16" IN THICKNESS AND DO NOT EXCEED A WIDTH EQUAL TO THE FLANGE WIDTH LESS 2" OR A THICKNESS EQUAL TO 2 TIMES THE FLANGE THICKNESS. THE SIZE OF FILLET WELDS SHALL CONFORM TO THE REQUIREMENTS OF THE CURRENT ANSI/AASHTO/AWS "BRIDGE WELDING CODE". ELECTROSLAG WELDING WILL NOT BE PERMITTED.

WITH THE SOLE EXCEPTION OF EDGES AT SURFACES WHICH BEAR ON OTHER SURFACES, ALL SHARP EDGES AND ENDS OF SHAPES AND PLATES SHALL BE SLIGHTLY ROUNDED BY SUITABLE MEANS TO A RADIUS OF APPROXIMATELY 1/16 INCH OR EQUIVALENT FLAT SURFACE AT A SUITABLE ANGLE PRIOR TO PAINTING, GALVANIZING, OR METALLIZING.

HANDRAILS AND POSTS:

METAL STANDARDS AND FACES OF THE CONCRETE END POSTS FOR THE METAL RAIL SHALL BE SET NORMAL TO THE GRADE OF THE CURB, UNLESS OTHERWISE SHOWN ON PLANS. THE METAL RAIL AND TOPS OF CONCRETE POSTS USED WITH THE ALUMINUM RAIL SHALL BE BUILT PARALLEL TO THE GRADE OF THE CURB.

METAL HANDRAILS SHALL BE IN ACCORDANCE WITH THE PLANS. RAILS SHALL BE AS MANUFACTURED FOR BRIDGE RAILING. CASTINGS SHALL BE OF A UNIFORM APPEARANCE. FINS AND OTHER DEFORMATIONS RESULTING FROM CASTING OR OTHERWISE SHALL BE REMOVED IN A MANNER SO THAT A UNIFORM COLORING OF THE COMPLETED CASTING SHALL BE OBTAINED. CASTINGS WITH DISCOLORATIONS OR OF NON-UNIFORM COLORING WILL NOT BE ACCEPTED. CERTIFIED MILL REPORTS ARE REQUIRED FOR METAL RAILS AND POSTS.

SPECIAL NOTES:

GENERALLY, IN CASE OF DISCREPANCY, THIS STANDARD SHEET OF NOTES SHALL GOVERN OVER THE SPECIFICATIONS, BUT THE REMAINDER OF THE PLANS SHALL GOVERN OVER NOTES HEREON, AND SPECIAL PROVISIONS SHALL GOVERN OVER ALL. SEE SPECIFICATIONS ARTICLE 105-4.

ENGLISH

JANUARY, 1990