This electronic collection of documents is provided for the convenience of the user and is Not a Certified Document –

The documents contained herein were originally issued and sealed by the individuals whose names and license numbers appear on each page, on the dates appearing with their signature on that page.
This file or an individual page shall not be considered a certified document.

DocuSign Envelope ID: 2B277F33-5EBA-415B-841B-4202B6956356

09/08/99

TIP PROJECT: B–5744

See Sheet 1-A For Index of Sheets

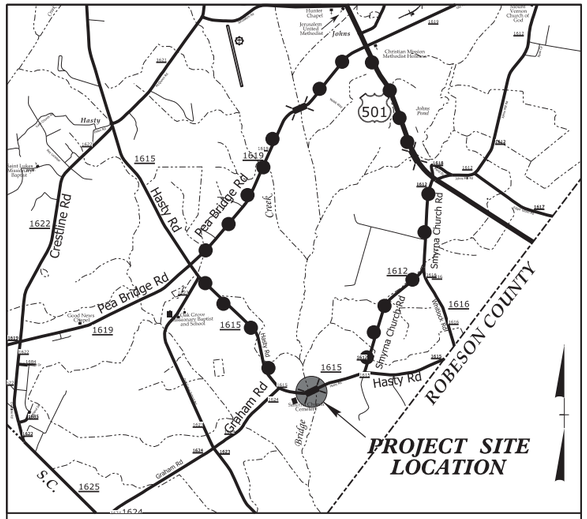

VICINITY MAP

OFF-SITE DETOUR ROUTE

N.T.S.

STATE OF NORTH CAROLINA
DIVISION OF HIGHWAYS

SCOTLAND COUNTY

LOCATION: BRIDGE NO. 820050 ON SR 1615 (HASTY ROAD) OVER BRIDGE CREEK (aka LEITH CREEK)

TYPE OF WORK: GRADING, DRAINAGE, PAVING AND STRUCTURE

STATE	STATE PROJECT REFERENCE NO.	SHEET NO.	TOTAL SHEETS
N.C.	B–5744	1	

STATE PROJ. NO.	F.A. PROJ. NO.	DESCRIPTION
45700.1.1		P.E.
45700.2.1		R/W

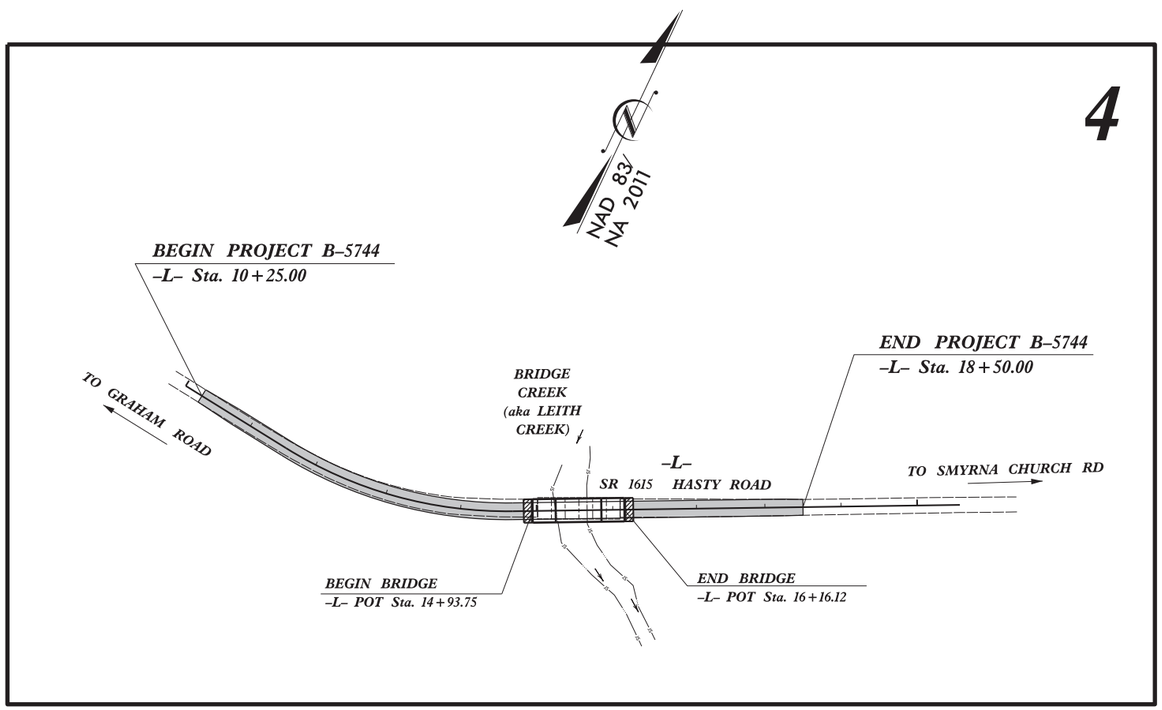

DOCUMENT NOT CONSIDERED FINAL UNLESS ALL SIGNATURES COMPLETED

CONTRACT:

GRAPHIC SCALES

50 25 0 50 100
PLANS

50 25 0 50 100
PROFILE (HORIZONTAL)

10 5 0 10 20
PROFILE (VERTICAL)

DESIGN DATA

ADT 2010 = 1400
ADT =
K = %
D = %
T = 6 % *
V = 60 MPH
* TTST = DUAL
FUNC CLASS =
LOCAL
SUBREGIONAL TIER

PROJECT LENGTH

LENGTH ROADWAY PROJECT B–5744	=	0.133 mi
LENGTH STRUCTURE PROJECT B–5744	=	0.023 mi
TOTAL LENGTH OF PROJECT B–5744	=	0.156 mi

PLANS PREPARED BY:
CH ENGINEERING
3220 GLEN ROYAL RD, RALEIGH, NC 27617
TELE 919.788.0224 FAX 919.788.0232
NC LICENSE #P-0189

2012 STANDARD SPECIFICATIONS

RIGHT OF WAY DATE:
JULY 1, 2016

LETTING DATE:
DECEMBER 2016

PLANS PREPARED FOR:
DIVISION OF HIGHWAYS
DIVISION 8
902 N Sandhills Blvd
Aberdeen, NC 28315

BRIAN A. WILES, PE
PROJECT ENGINEER

TIM WELCH, PE
NCDOT CONTACT
DIV 8 BRIDGE PROGRAM MANAGER

HYDRAULICS ENGINEER
DocuSigned by: Karen Hefner
11/3/2016
P.E.
SIGNATURE:
NORTH CAROLINA PROFESSIONAL SEAL 31025 ENGINEER KAREN HEFNER

ROADWAY DESIGN ENGINEER
11/3/2016
DocuSigned by: Brian A Wiles
P.E.
SIGNATURE:
NORTH CAROLINA PROFESSIONAL SEAL 16689 ENGINEER BRIAN ALLEN WILES

STATE OF NORTH CAROLINA DEPARTMENT OF TRANSPORTATION

11/3/2016
R:\Roadway\Proj\B5744_Rdy_tsh.dgn
USERNAME=

CH ENGINEERING
3220 GLEN ROYAL RD. RALEIGH, NC 27617
TELE 919.788.0224 FAX 919.788.0232
NC LICENSE #P-0189

PROJECT REFERENCE NO.	SHEET NO.
B-5744	1A

ROADWAY DESIGN ENGINEER
11/3/2016
NORTH CAROLINA PROFESSIONAL SEAL 16689 ENGINEER BRIAN ALLEN WILES
DocuSigned by: Brian A Wiles

DOCUMENT NOT CONSIDERED FINAL UNLESS ALL SIGNATURES COMPLETED

INDEX OF SHEETS

SHEET NUMBER	SHEET
1	TITLE SHEET
1A	INDEX OF SHEETS, GENERAL NOTES AND STANDARD DRAWINGS
1B	CONVENTIONAL SYMBOLS
1C-1	SURVEY CONTROL SHEETS
2A-1	PAVEMENT SCHEDULE, TYPICAL SECTIONS AND WEDGING DETAILS
2C-1	DETAIL OF STRUCTURE ANCHOR UNIT, TYPE III
3B-1	SUMMARIES OF EARTHWORK, ASPHALT PAVEMENT REMOVAL, SHOULDER BERM GUTTER AND GUARDRAIL
3D-1	LIST OF PIPES, ENDWALLS, ETC. (for PIPES 48" & UNDER)
4	PLAN SHEET
5	PROFILE SHEET
TMP-1 THRU TMP-2	TRAFFIC MANAGEMENT PLANS
EC-1 THRU EC-5	EROSION CONTROL PLANS
UO-1 THRU UO-2	UTILITIES BY OTHERS PLANS
X-1 THRU X-13	CROSS-SECTIONS
S-1 THRU S-22	STRUCTURE PLANS

GENERAL NOTES:

2012 SPECIFICATIONS
EFFECTIVE: 01-17-2012
REVISED: 10-31-2014

GRADE LINE:
GRADING AND SURFACING:

THE GRADE LINES SHOWN DENOTE THE FINISHED ELEVATION OF THE PROPOSED SURFACING AT GRADE POINTS SHOWN ON THE TYPICAL SECTIONS. GRADE LINES MAY BE ADJUSTED AT THEIR BEGINNING AND ENDING AND AT STRUCTURES AS DIRECTED BY THE ENGINEER IN ORDER TO SECURE A PROPER TIE-IN.

CLEARING:

CLEARING ON THIS PROJECT SHALL BE PERFORMED TO THE LIMITS ESTABLISHED BY METHOD III.

SUPERELEVATION:

ALL CURVES ON THIS PROJECT SHALL BE SUPERELEVATED IN ACCORDANCE WITH STD. NO. 225.04 USING THE RATE OF SUPERELEVATION AND RUNOFF SHOWN ON THE PLANS. SUPERELEVATION IS TO BE REVOLVED ABOUT THE GRADE POINTS SHOWN ON THE TYPICAL SECTIONS.

SHOULDER CONSTRUCTION:

ASPHALT, EARTH, AND CONCRETE SHOULDER CONSTRUCTION ON THE HIGH SIDE OF SUPERELEVATED CURVES SHALL BE IN ACCORDANCE WITH STD. NO. 560.01.

GUARDRAIL:

THE GUARDRAIL LOCATIONS SHOWN ON THE PLANS MAY BE ADJUSTED DURING CONSTRUCTION AS DIRECTED BY THE ENGINEER. THE CONTRACTOR SHOULD CONSULT WITH THE ENGINEER PRIOR TO ORDERING GUARDRAIL MATERIAL.

TEMPORARY SHORING:

SHORING REQUIRED FOR THE MAINTENANCE OF TRAFFIC WILL BE PAID FOR AS "EXTRA WORK" IN ACCORDANCE WITH SECTION 104-7.

SUBSURFACE PLANS:

NO SUBSURFACE PLANS ARE AVAILABLE ON THIS PROJECT. THE CONTRACTOR SHOULD MAKE HIS OWN INVESTIGATION AS TO THE SUBSURFACE CONDITIONS.

END BENTS:

THE ENGINEER SHALL CHECK THE STRUCTURE END BENT PLANS, DETAILS, AND CROSS-SECTION PRIOR TO SETTING OF THE SLOPE STAKES FOR THE EMBANKMENT OR EXCAVATION APPROACHING A BRIDGE.

UTILITIES:

UTILITY OWNERS ON THIS PROJECT ARE Lumbee River EMC - Power.

ANY RELOCATION OF EXISTING UTILITIES WILL BE ACCOMPLISHED BY OTHERS, EXCEPT AS SHOWN ON THE PLANS.

RIGHT-OF-WAY MARKERS:

ALL RIGHT-OF-WAY MARKERS ON THIS PROJECT SHALL BE PLACED BY CONTRACT.

EFF. 01-17-2012
REV. 02-29-2016

2012 ROADWAY ENGLISH STANDARD DRAWINGS

The following Roadway Standards as appear in "Roadway Standard Drawings" Highway Design Branch - N. C. Department of Transportation - Raleigh, N. C., Dated January, 2012 are applicable to this project and by reference hereby are considered a part of these plans:

STD.NO.	TITLE
DIVISION 2 - EARTHWORK	
200.03	Method of Clearing - Method III
225.02	Guide for Grading Subgrade - Secondary and Local
225.04	Method of Obtaining Superelevation - Two Lane Pavement
DIVISION 3 - PIPE CULVERTS	
300.01	Method of Pipe Installation
DIVISION 4 - MAJOR STRUCTURES	
422.11	Bridge Approach Fills - Sub Regional Tier
DIVISION 5 - SUBGRADE, BASES AND SHOULDERS	
560.01	Method of Shoulder Construction - High Side of Superelevated Curve - Method I
DIVISION 6 - ASPHALT BASES AND PAVEMENTS	
654.01	Pavement Repairs
DIVISION 8 - INCIDENTALS	
806.01	Concrete Right-of-Way Marker
806.02	Granite Right-of-Way Marker
840.00	Concrete Base Pad for Drainage Structures
840.18	Concrete Grated Drop Inlet Type 'B' - 12" thru 36" Pipe
840.24	Frames and Narrow Slot Sag Grates
840.25	Anchorage for Frames - Brick or Concrete or Precast
840.27	Brick Grated Drop Inlet Type 'B' - 12" thru 36" Pipe
840.29	Frames and Narrow Slot Flat Grates
840.35	Traffic Bearing Grated Drop Inlet - for Cast Iron Double Frame and Grates
840.45	Precast Drainage Structure
840.46	Traffic Bearing Precast Drainage Structure
840.66	Drainage Structure Steps
846.01	Concrete Curb, Gutter and Curb & Gutter
846.04	Drop Inlet Installation in Shoulder Berm Gutter
862.01	Guardrail Placement
862.02	Guardrail Installation
876.02	Guide for Rip Rap at Pipe Outlets

8/17/99
11/3/2016
R:\Roadway\Proj\B5744_Rdy_tsh_1A.dgn
USERNAME

04/06/15

PROJECT REFERENCE NO.	SHEET NO.
B-5744	1B

CONVENTIONAL PLAN SHEET SYMBOLS

**S.U.E. = Subsurface Utility Engineering*

BOUNDARIES AND PROPERTY:

- State Line
- County Line
- Township Line
- City Line
- Reservation Line
- Property Line
- Existing Iron Pin — EIP
- Property Corner
- Property Monument — ECM
- Parcel/Sequence Number — 123
- Existing Fence Line
- Proposed Woven Wire Fence
- Proposed Chain Link Fence
- Proposed Barbed Wire Fence
- Existing Wetland Boundary — WLB
- Proposed Wetland Boundary — WLB
- Existing Endangered Animal Boundary — EAB
- Existing Endangered Plant Boundary — EPB
- Existing Historic Property Boundary — HPB

BUILDINGS AND OTHER CULTURE:

- Gas Pump Vent or U/G Tank Cap
- Sign — S
- Well — W
- Small Mine
- Foundation
- Area Outline
- Cemetery
- Building
- School
- Church
- Dam

HYDROLOGY:

- Stream or Body of Water
- Hydro, Pool or Reservoir
- Jurisdictional Stream — JS
- Buffer Zone 1 — BZ 1
- Buffer Zone 2 — BZ 2
- Flow Arrow
- Disappearing Stream
- Spring
- Wetland
- Proposed Lateral, Tail, Head Ditch — FLOW
- False Sump

RAILROADS:

- Standard Gauge — CSX TRANSPORTATION
- RR Signal Milepost — MILEPOST 35
- Switch — SWITCH
- RR Abandoned
- RR Dismantled

RIGHT OF WAY:

- Baseline Control Point
- Existing Right of Way Marker
- Existing Right of Way Line
- Proposed Right of Way Line — RW
- Proposed Right of Way Line with Iron Pin and Cap Marker — RW
- Proposed Right of Way Line with Concrete or Granite R/W Marker — RW
- Proposed Control of Access Line with Concrete C/A Marker — CA
- Existing Control of Access — CA
- Proposed Control of Access — CA
- Existing Easement Line — E
- Proposed Temporary Construction Easement — E
- Proposed Temporary Drainage Easement — TDE
- Proposed Permanent Drainage Easement — PDE
- Proposed Permanent Drainage / Utility Easement — DUE
- Proposed Permanent Utility Easement — PUE
- Proposed Temporary Utility Easement — TUE
- Proposed Aerial Utility Easement — AUE
- Proposed Permanent Easement with Iron Pin and Cap Marker

ROADS AND RELATED FEATURES:

- Existing Edge of Pavement
- Existing Curb
- Proposed Slope Stakes Cut — C
- Proposed Slope Stakes Fill — F
- Proposed Curb Ramp — CR
- Existing Metal Guardrail
- Proposed Guardrail
- Existing Cable Guiderail
- Proposed Cable Guiderail
- Equality Symbol
- Pavement Removal

VEGETATION:

- Single Tree
- Single Shrub
- Hedge
- Woods Line
- Orchard
- Vineyard — Vineyard

EXISTING STRUCTURES:

MAJOR:

- Bridge, Tunnel or Box Culvert — CONC
- Bridge Wing Wall, Head Wall and End Wall — CONC WW

MINOR:

- Head and End Wall — CONC HW
- Pipe Culvert
- Footbridge
- Drainage Box: Catch Basin, DI or JB — CB
- Paved Ditch Gutter
- Storm Sewer Manhole — S
- Storm Sewer — S

UTILITIES:

POWER:

- Existing Power Pole
- Proposed Power Pole
- Existing Joint Use Pole
- Proposed Joint Use Pole
- Power Manhole — P
- Power Line Tower
- Power Transformer
- U/G Power Cable Hand Hole
- H-Frame Pole
- U/G Power Line LOS B (S.U.E.*)
- U/G Power Line LOS C (S.U.E.*) — P
- U/G Power Line LOS D (S. — P

TELEPHONE:

- Existing Telephone Pole
- Proposed Telephone Pole
- Telephone Manhole — T
- Telephone Pedestal — T
- Telephone Cell Tower
- U/G Telephone Cable Hand Hole — T — TC — T FO

WATER:

- Water Manhole — W
- Water Meter
- Water Valve
- Water Hydrant
- Above Ground Water Line — W — A/G Water

TV:

- TV Pedestal — C
- TV Tower
- U/G TV Cable Hand Hole — TV — TV FO

GAS:

- Gas Valve
- Gas Meter
- Above Ground Gas Line — G — A/G Gas

SANITARY SEWER:

- Sanitary Sewer Manhole
- Sanitary Sewer Cleanout
- U/G Sanitary Sewer Line — SS
- Above Ground Sanitary Sewer — A/G Sanitary Sewer — FSS

MISCELLANEOUS:

- Utility Pole
- Utility Pole with Base
- Utility Located Object
- Utility Traffic Signal Box — S — ZUTL
- U/G Tank; Water, Gas, Oil
- Underground Storage Tank, Approx. Loc.
- A/G Tank; Water, Gas, Oil
- Geoenvironmental Boring
- Abandoned According to Utility Records — AATUR
- End of Information — E.O.I.

SURVEY CONTROL SHEET B–5744
(PRELIMINARY)

CH ENGINEERING
3220 GLEN ROYAL RD. RALEIGH, NC 27617
TELE 919.788.0224 FAX 919.788.0232
NC LICENSE #P-0189

PROJECT REFERENCE NO.	SHEET NO.
B–5744	1C–1

BL	POINT	DESC.	NORTH	EAST	ELEVATION	L STATION	OFFSET
1		GPS B-5744-1	331531.1724	1863295.3719	165.09	OUTSIDE PROJECT LIMITS	
2		GPS B-5744-2	331382.8630	1863963.0880	151.47	OUTSIDE PROJECT LIMITS	
3		BL-3	331339.5732	1864434.1802	140.90	12+51.96	16.24 LT
4		BL-4	331382.7044	1864606.3922	142.48	14+36.25	19.30 LT
5		BL-5	331671.7277	1865210.3190	142.36	OUTSIDE PROJECT LIMITS	

****
BM1 ELEVATION = 143.92
N 331425 E 1864214
L STATION 10+20.01 84.30' LEFT
RR SPIKE IN 16" POLAR
****

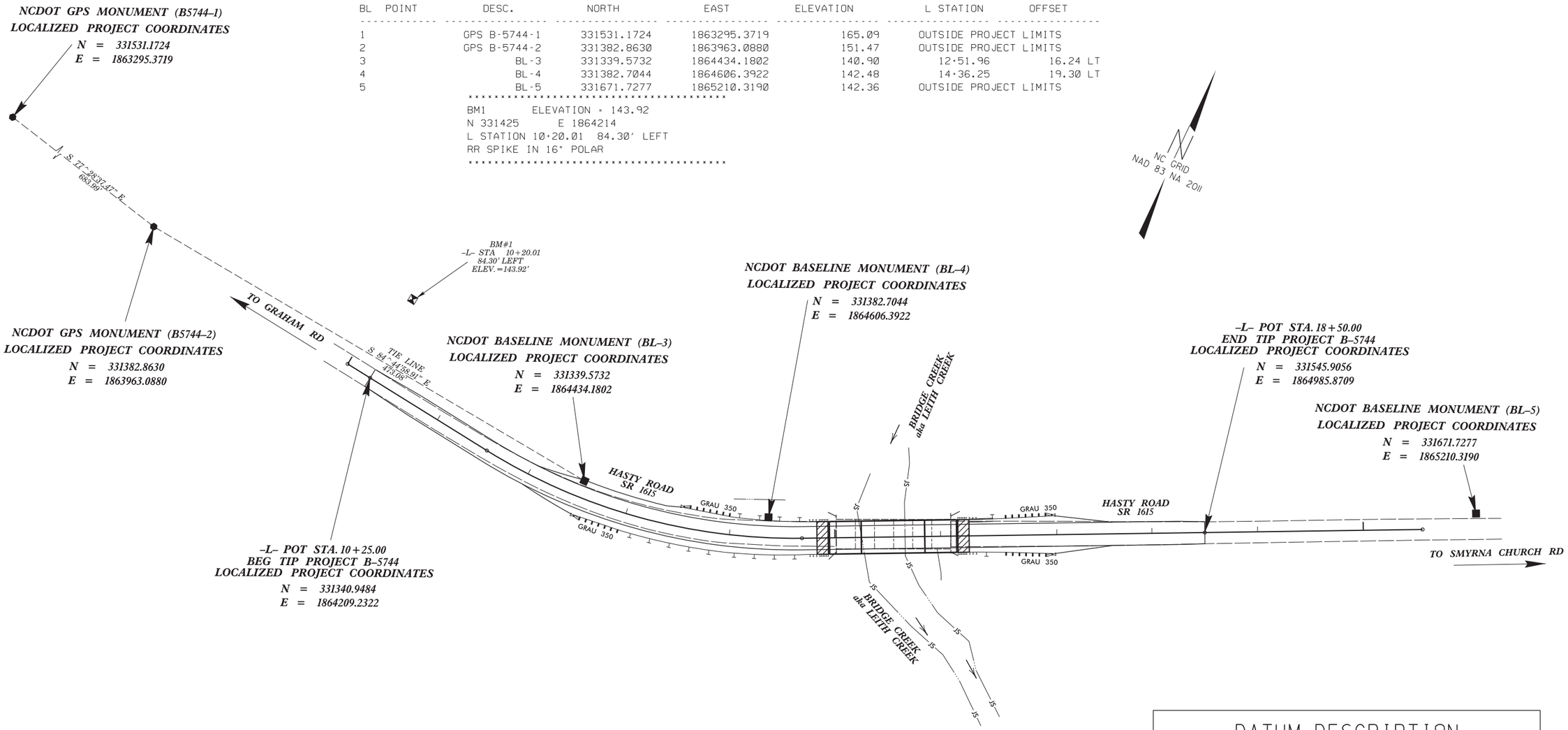

DATUM DESCRIPTION

THE LOCALIZED COORDINATE SYSTEM DEVELOPED FOR THIS PROJECT IS BASED ON THE STATE PLANE COORDINATES ESTABLISHED BY NCDOT FOR MONUMENT "B5744-2"
WITH NAD 83/NA 2011 STATE PLANE GRID COORDINATES OF
NORTHING: 331382.86(ft) EASTING: 1863963.09(ft)
ELEVATION: 151.47(ft)
THE AVERAGE COMBINED GRID FACTOR USED ON THIS PROJECT (GROUND TO GRID) IS: 0.999923465
THE N.C. LAMBERT GRID BEARING AND LOCALIZED HORIZONTAL GROUND DISTANCE FROM "B5744-2" TO -L- STATION 10+25.00 IS
S 80° 20' 09.97" E 249.69'
ALL LINEAR DIMENSIONS ARE LOCALIZED HORIZONTAL DISTANCES
VERTICAL DATUM USED IS NAVD 88

NOTES:

SITE CALIBRATION INFORMATION HAS NOT BEEN PROVIDED FOR THIS PROJECT. IF FURTHER INFORMATION IS NEEDED, PLEASE CONTACT THE LOCATION AND SURVEYS UNIT.

◆ INDICATES CONTROL MONUMENTS USED OR SET FOR HORIZONTAL PROJECT CONTROL BY THE NCDOT LOCATION AND SURVEYS UNIT.

● INDICATES GEODETIC CONTROL MONUMENTS USED OR SET FOR HORIZONTAL PROJECT CONTROL BY THE NCDOT LOCATION AND SURVEYS UNIT.

PROJECT CONTROL ESTABLISHED USING GLOBAL POSITIONING SYSTEM.

NOTE: DRAWING NOT TO SCALE

6/2/99
10/27/2016
R:\Roadway\Proj\B5744_rdy_1C-1.dgn
USER NAME

CH ENGINEERING
3220 GLEN ROYAL RD. RALEIGH, NC 27617
TELE 919.788.0224 FAX 919.788.0232
NC LICENSE #P-0189

PROJECT REFERENCE NO.	SHEET NO.
B-5744	2A-1

ROADWAY DESIGN ENGINEER
11/3/2016
NORTH CAROLINA PROFESSIONAL SEAL 16689 ENGINEER BRIAN ALLEN WILES
Docusigned by: Brian A Wiles
DOCUMENT NOT CONSIDERED FINAL UNLESS ALL SIGNATURES COMPLETED

PAVEMENT DESIGN ENGINEER

PAVEMENT SCHEDULE

C1	PROP. APPROX. 2″ ASPHALT CONCRETE SURFACE COURSE, TYPE SF9.5A, AT AN AVERAGE RATE OF 110 LBS. PER SQ. YD. IN EACH OF TWO LAYERS.
C2	PROP. VAR. DEPTH ASPHALT CONCRETE SURFACE COURSE, TYPE SF9.5A, AT AN AVERAGE RATE OF 110 LBS. PER SQ. YD. PER 1″ DEPTH. TO BE PLACED IN LAYERS NOT TO EXCEED 1½″ IN DEPTH.
D1	PROP. APPROX. 3″ ASPHALT CONCRETE INTERMEDIATE COURSE, TYPE I19.0B, AT AN AVERAGE RATE OF 342 LBS. PER SQ. YD.
D2	PROP. VAR. DEPTH ASPHALT CONCRETE INTERMEDIATE COURSE, TYPE I19.0B, AT AN AVERAGE RATE OF 114 LBS. PER SQ. YD. PER 1″ DEPTH, TO BE PLACED IN LAYERS NOT LESS THAN 2½″ IN DEPTH OR GREATER THAN 4″ IN DEPTH.
E1	PROP. APPROX. 5½″ ASPHALT CONCRETE BASE COURSE, TYPE B25.0B, AT AN AVERAGE RATE OF 627 LBS. PER SQ. YD.
E2	PROP. VAR. DEPTH ASPHALT CONCRETE BASE COURSE, TYPE B25.0B, AT AN AVERAGE RATE OF 114 LBS. PER SQ. YD. PER 1″ DEPTH. TO BE PLACED IN LAYERS NOT LESS THAN 3″ IN DEPTH OR GREATER THAN 5½″ IN DEPTH.
T	EARTH MATERIAL.
U	EXISTING PAVEMENT.
W	VARIABLE DEPTH ASPHALT PAVEMENT (SEE STANDARD WEDGING DETAIL THIS SHEET)

NOTE: PAVEMENT EDGE SLOPES ARE 1:1 UNLESS SHOWN OTHERWISE.

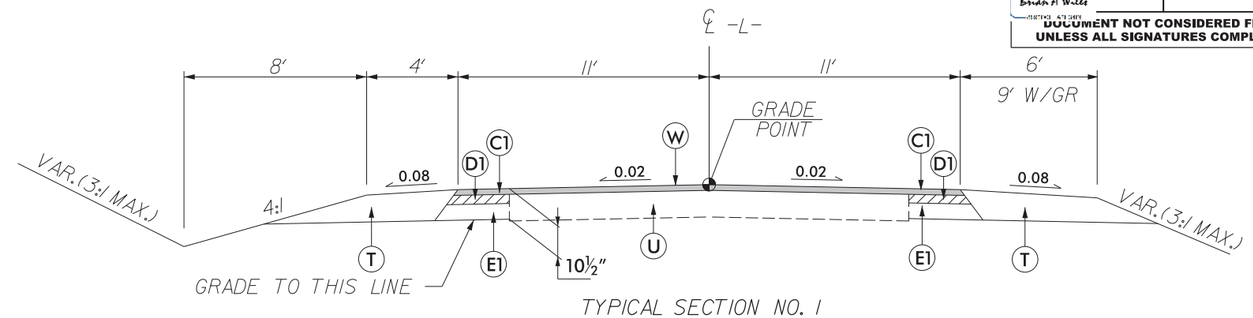

TYPICAL SECTION NO. 1
-L- STA 10+25.00 TO -L- STA 14+40.00
-L- STA 16+60.00 TO -L- STA 18+50.00

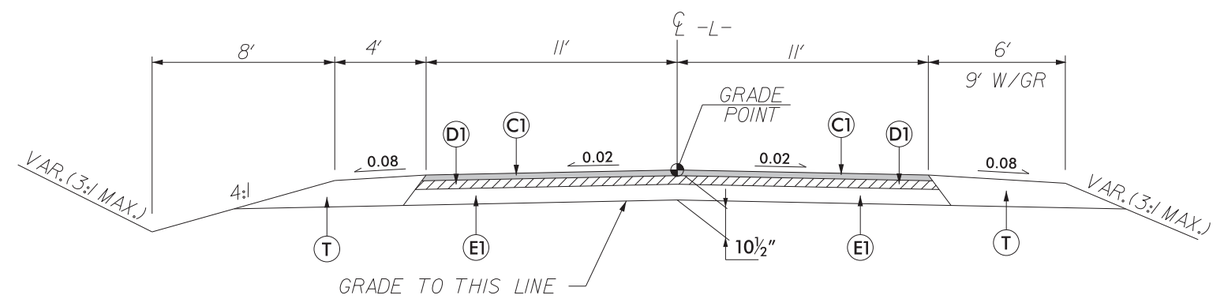

TYPICAL SECTION NO. 2
-L- STA 14+40.00 TO -L- STA 14+93.75 (BEGIN BRIDGE)
-L- STA 16+16.25 (END BRIDGE) TO -L- STA 16+60.00

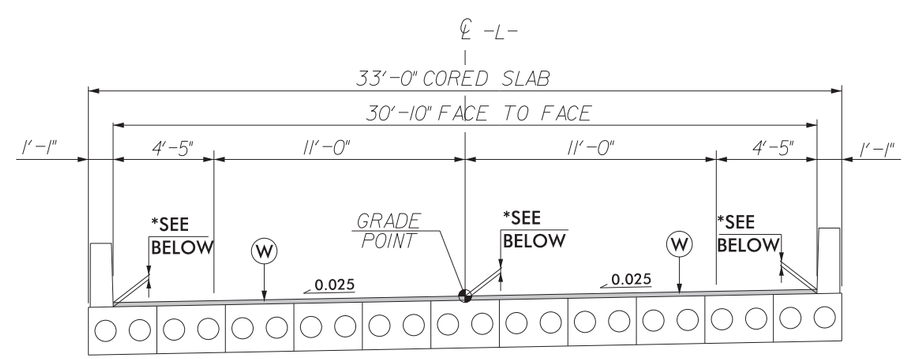

* 2¾″ @ ℄ BRG., SPAN A & C
3½″ @ ℄ BRG., SPAN B

TYPICAL SECTION NO. 3
-L- STA 14+93.75 TO -L- STA 16+16.25

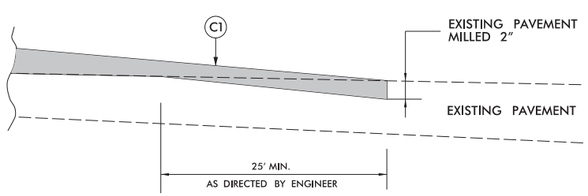

Incidental Milling Existing Pavement

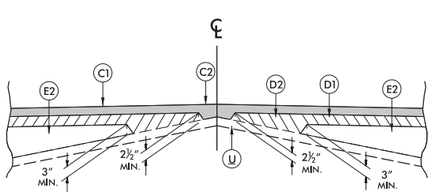

Detail Showing Method of Wedging

6/2/99
11/3/2016
R:\Roadway\Proj\B5744_Rdy_typ.dgn
USERNAME

$$$$$$SYSTIME$$$$$
$$$$$$$$$$$$$$$$DGN$$$$$$$$$$$$$$$$$
$$$$USERNAME$$$$

STATE OF NORTH CAROLINA
DEPT. OF TRANSPORTATION
DIVISION OF HIGHWAYS
RALEIGH, N.C.

ENGLISH DETAIL DRAWING FOR
STRUCTURE ANCHOR UNITS
GUARDRAIL ANCHOR UNIT, TYPE III FOR ATTACHMENT TO RAIL ON BRIDGE - SUB REGIONAL TIER

SHEET 2 OF 7
862d03

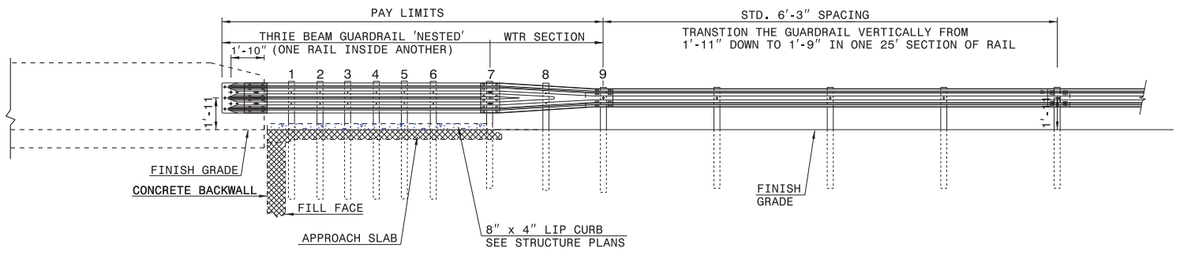

ELEVATION

NOTE:
**POST NOT REQUIRED FOR SKEW ANGLES GREATER THAN 150° OR LESS THAN 30° UNLESS OTHERWISE DIRECTED BY THE ENGINEER.
*THE DISTANCE FROM END OF BRIDGE RAIL TO CENTER LINE OF THE FIRST POST SHOULD BE 11½" IF CONCRETE BACKWALL IS NOT PRESENT.
-SHOULDER BERM GUTTER MUST BE INSTALLED TO THE LIMITS 8" x 4" LIP CURB IS SHOWN IF ANCHOR UNIT IS NOT ADJACENT TO AN APPROACH SLAB.
-MEASURE GUARDRAIL HEIGHT FROM THE TOP OF ADJACENT SURFACE (SHOULDER, BERM, OR GUTTER).
-LAP JOINTS IN THE DIRECTION OF TRAFFIC FLOW.
-SEE SHEET 5 FOR POST SECTIONS 1 THRU 9.

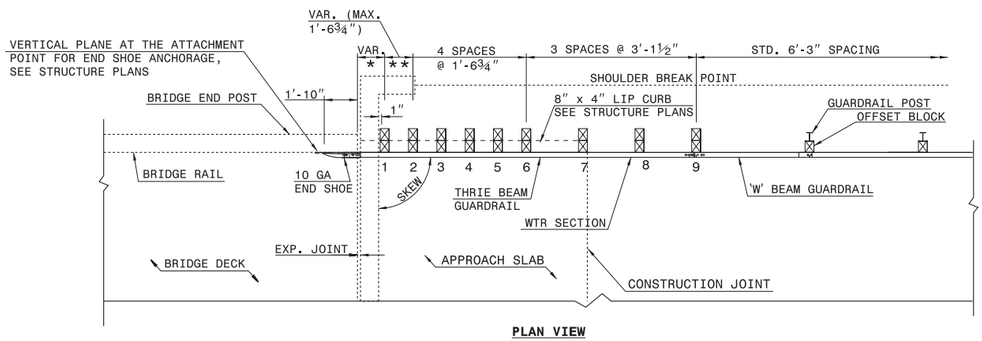

PLAN VIEW

GUARDRAIL ANCHOR UNIT, TYPE III FOR ATTACHMENT TO RAIL ON BRIDGE - SUB REGIONAL TIER

STATE OF NORTH CAROLINA
DEPT. OF TRANSPORTATION
DIVISION OF HIGHWAYS
RALEIGH, N.C.

ENGLISH DETAIL DRAWING FOR
STRUCTURE ANCHOR UNITS
GUARDRAIL ANCHOR UNIT, TYPE III FOR ATTACHMENT TO RAIL ON BRIDGE - SUB REGIONAL TIER

SHEET 2 OF 7
862d03

STATE OF NORTH CAROLINA
DEPT. OF TRANSPORTATION
DIVISION OF HIGHWAYS
RALEIGH, N.C.

ENGLISH DETAIL DRAWING FOR
STRUCTURE ANCHOR UNITS
GUARDRAIL ANCHOR UNIT, TYPE III

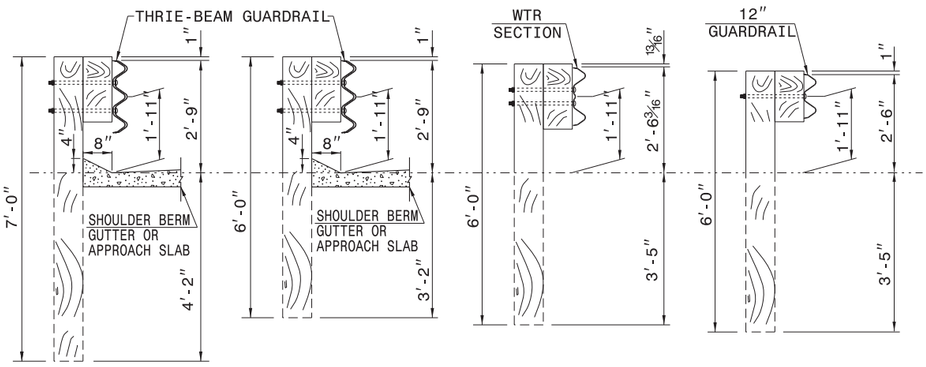

SECTION OF THRIE BEAM POSTS 1 THRU 6 | **SECTION OF THRIE BEAM POST 7** | **SECTION OF WTR BEAM POST 8** | **SECTION OF 'W' BEAM POST 9**

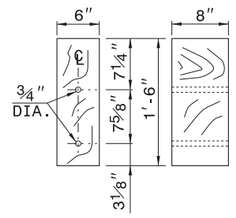

THRIE BEAM OFFSET BLOCK

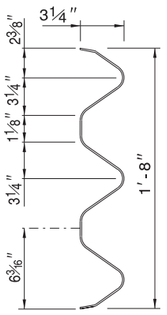

THRIE-BEAM SECTION

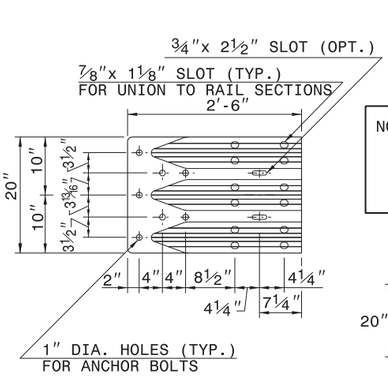

END SHOE

NOTE: THE MID POST AND OFFSET BLOCK OF THE WTR SECTION WILL REQUIRE SPECIAL BOLT HOLE DRILLING IN THE THRIE BEAM OFFSET BLOCK AND LINE POST.

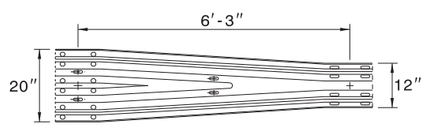

WTR SECTION
ELEVATION VIEW

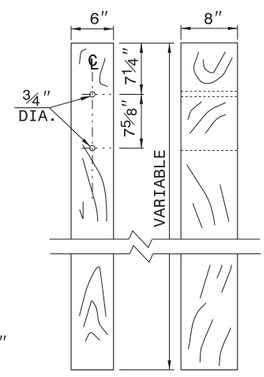

THRIE BEAM LINE POST

ENGLISH DETAIL DRAWING FOR
STRUCTURE ANCHOR UNITS
GUARDRAIL ANCHOR UNIT, TYPE III

SHEET 3 OF 7
862d03

CONTRACT STANDARDS AND DEVELOPMENT UNIT
Office 919-707-6950 FAX 919-250-4119

SEE TITLE BLOCK

ORIGINAL BY: J. HOWERTON DATE: 06-22-12
MODIFIED BY: DATE:
CHECKED BY: DATE:
FILE SPEC.:

PROJECT REFERENCE NO. B-5744
SHEET NO. 2C-1

12/06/07

COMPUTED BY: _____ DATE: _____
CHECKED BY: _____ DATE: _____

STATE OF NORTH CAROLINA
DIVISION OF HIGHWAYS

PROJECT REFERENCE NO.	SHEET NO.
B-5744	3B-1

SUMMARY OF EARTHWORK

IN CUBIC YARDS

STATION	STATION	UNCL. EXCAV.	EMBANK. +%	BORROW	WASTE
–L– 10+25	14+93.75	288	1,304	1,016	
	SUBTOTAL	288	1,304	1,016	
–L– 16+16.25	18+50	72	130	58	
	SUBTOTAL	72	130	58	
	SUBTOTAL	360	1,434	1,074	
TOTAL		360	1,435	1,074	
MATERIAL FOR SHOULDER CONSTRUCTION			253	253	
LOSS DUE TO CLEARING & GRUBBING					
WASTE IN LIEU OF BORROW					
PROJECT TOTAL		360	1,687	1,327	
EST. 5% TO REPLACE TOP SOIL ON BORROW PIT				66	
GRAND TOTALS:		360		1,393	
SAY:		400		1,400	

Earthwork quantities are calculated by the Roadway Design Unit. These earthwork quantities are based in part on subsurface data provided by the Geotechnical Engineering Unit.

SUMMARY OF EXISTING ASPHALT PAVEMENT REMOVAL

SURVEY LINE	STATION	STATION	LOCATION LT/RT/CL	YD³
L	14+40	15+02	CL	165
L	16+10	16+60	CL	133
			TOTAL:	298
			SAY:	300

SHOULDER BERM GUTTER SUMMARY

SURVEY LINE	STATION	STATION	LENGTH
L (RT SIDE)	16+27	16+50	23
		TOTAL:	23
		SAY:	23

"N" = DISTANCE FROM EDGE OF LANE TO FACE OF GUARDRAIL.
TOTAL SHOULDER WIDTH = DISTANCE FROM EDGE OF TRAVEL LANE TO SHOULDER BREAK POINT.
FLARE LENGTH = DISTANCE FROM LAST SECTION OF PARALLEL GUARDRAIL TO END OF GUARDRAIL.
W = TOTAL WIDTH OF FLARE FROM BEGINNING OF TAPER TO END OF GUARDRAIL.
G = GATING IMPACT ATTENUATOR TYPE 350
NG = NON-GATING IMPACT ATTENUATOR TYPE 350

GUARDRAIL SUMMARY

SURVEY LINE	BEG. STA.	END STA.	LOCATION	LENGTH			WARRANT POINT		"N" DIST. FROM E.O.L.	TOTAL SHOUL. WIDTH	FLARE LENGTH		W		ANCHORS									IMPACT ATTENUATOR TYPE 350			SINGLE FACED CONCRETE BARRIER	REMOVE EXISTING GUARDRAIL	REMOVE AND STOCKPILE EXISTING GUARDRAIL	REMARKS
				STRAIGHT	SHOP CURVED	DOUBLE FACED	APPROACH END	TRAILING END			APPROACH END	TRAILING END	APPROACH END	TRAILING END	XI MOD	XI	GRAU 350	M-350	TYPE III	CAT-1	VI MOD	BIC	AT-1	EA	G	NG				
L	13+51.13	14+94.88	LT	143.75				14+50				50		1			1		1											
L	12+51.13	14+94.88	RT	243.75			13+50		6	9	50		1				1		1											
L	16+15.12	17+08.87	LT	93.75			16+15				50		1				1		1											
L	16+15.12	17+08.87	RT	93.75				16+15				50		1			1		1											
		SUBTOTAL		575.00													4		4											
		LESS ANCHOR DEDUCTIONS																												
		GRAU-350 4 @ 50'		-200.00																										
		TYPE III 4 @ 18.75'		-75.00																										
		TOTAL		300.00													4		4											
		SAY		300.00			5 ADDITIONAL GUARDRAIL POSTS										4		4											

10/27/2016
R:\Roadway\Proj\B5744_Rdy_sum.dgn
USERNAME

COMPUTED BY: DATE:
CHECKED BY: BAW DATE: 12/7/15

PROJECT REFERENCE NO.	SHEET NO.
B-5744	3D-1

STATE OF NORTH CAROLINA
DIVISION OF HIGHWAYS

LIST OF PIPES, ENDWALLS, ETC. (FOR PIPES 48" & UNDER)

| STATION / SIZE / THICKNESS OR GAUGE | LOCATION (LT,RT, OR CL) | STRUCTURE NO. FROM | STRUCTURE NO. TO | TOP ELEVATION | INVERT ELEVATION | INVERT ELEVATION | SLOPE CRITICAL | DRAINAGE PIPE (RCP, CSP, CAAP, HDPE, or PVC) 12" | 15" | 18" | 24" | 30" | 36" | 42" | 48" | DO NOT USE RCP | DO NOT USE CSP | DO NOT USE CAAP | DO NOT USE HDPE | C.S. PIPE 12" | 15" | 18" | 24" | 30" | 36" | 42" | 48" | R.C. PIPE CLASS III 12" | 15" | 18" | 24" | 30" | 36" | 42" | 48" | R.C. PIPE CLASS IV 12" | 15" | 18" | 24" | 30" | 36" | 42" | 48" | *** R.C. PIPE (CLASS V) | **** RC PIPE CULVERTS, CONTRACTOR DESIGN | 15" SIDE DRAIN PIPE | 18" SIDE DRAIN PIPE | ENDWALLS STD. 838.01, STD. 838.11 OR STD. 838.80 (UNLESS NOTED OTHERWISE) CU. YDS. R.C.P. | C.S.P. | QUANTITIES FOR DRAINAGE STRUCTURES * TOTAL L.F. FOR PAY QUANTITY SHALL BE COL. "A" + (1.3 X COL."B") LIN. FT. PER EACH (0' THRU 5.0') | A 5.0' THRU 10.0' | B 10.0' AND ABOVE | C.B. STD. 840.01 OR STD. 840.02 | FRAME, GRATES AND HOOD STANDARD 840.03 TYPE OF GRATE E | F | G | | CONCRETE TRANSITIONAL SECTION DROP INLET | CATCH BASIN | | | | G.D.I. TYPE "B" STD. 840.18 OR 840.27 | T.B.D.I. STD. 840.35 | G.D.I. FRAME WITH TWO N.S. SAG GRATES STD. 840.24 | G.D.I. FRAME WITH TWO N.S. FLAT GRATES STD. 840.29 | | | | | | | | | | DRAINAGE PIPE ELBOWS NO. & SIZE | CONC. & BRICK PIPE PLUG, C.Y. STD. 840.71 | CONC. COLLARS CL. "B" C.Y. STD 840.72 | PIPE REMOVAL LIN.FT. | REMARKS |
|---|---|---

DocuSign Envelope ID: 2B277F33-5EBA-415B-841B-4202B6956356

5/14/99

CH ENGINEERING
3220 GLEN ROYAL RD. RALEIGH, NC 27617
TELE 919.788.0224 FAX 919.788.0232
NC LICENSE #P-0189

PROJECT REFERENCE NO.	SHEET NO.
B-5744	4
R/W SHEET NO.	

ROADWAY DESIGN ENGINEER
11/3/2016
NORTH CAROLINA PROFESSIONAL SEAL 16689 ENGINEER BRIAN ALLEN WILES
DocuSigned by: Brian A Wiles
11/3/2016 4:41:24 PM EDT
HYDRAULICS ENGINEER
NORTH CAROLINA PROFESSIONAL SEAL 31025 ENGINEER KAREN HEFNER
DocuSigned by: Karen Hefner
11/3/2016 7:13:07 PM EDT

DOCUMENT NOT CONSIDERED FINAL UNLESS ALL SIGNATURES COMPLETED

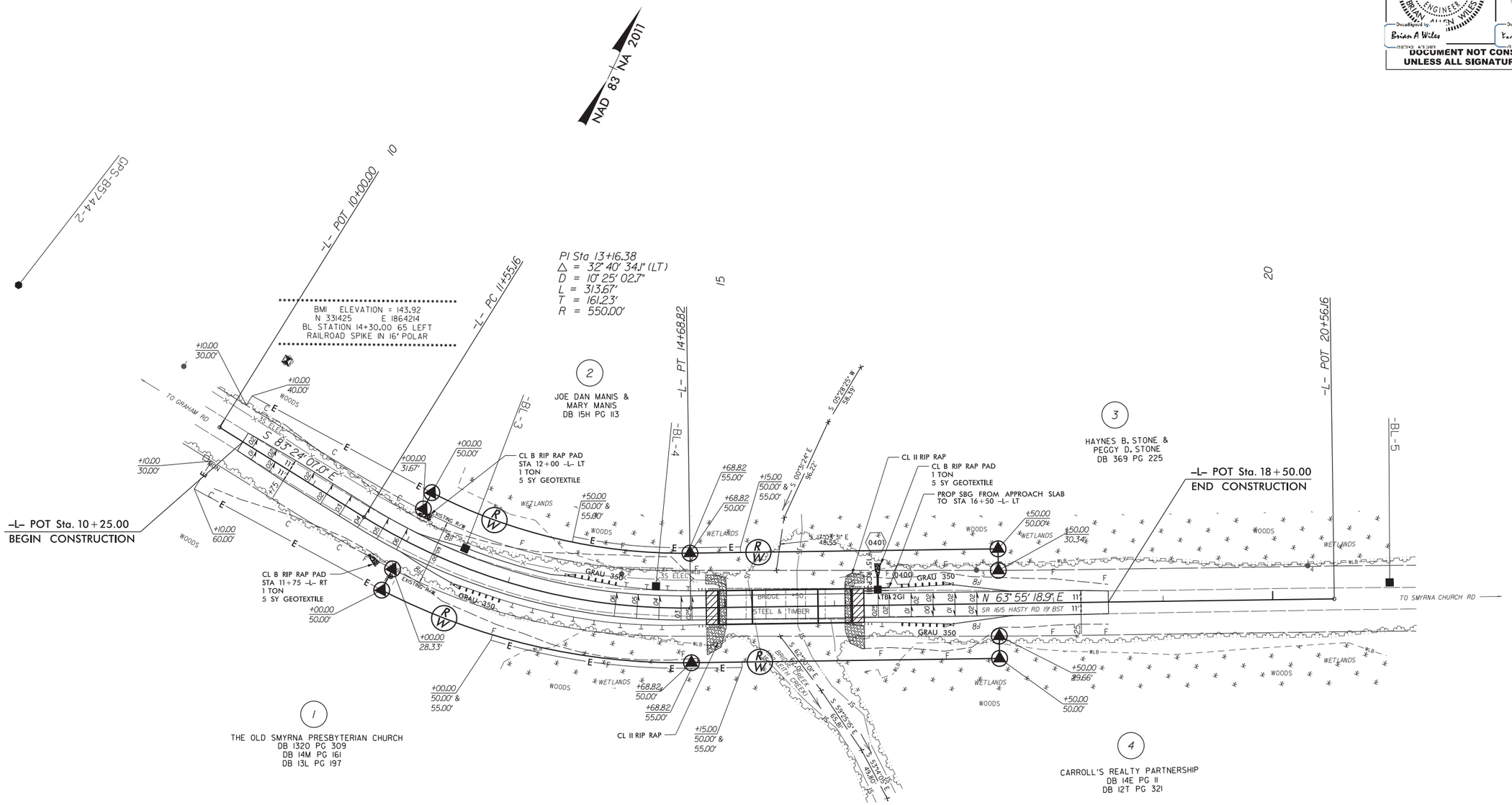

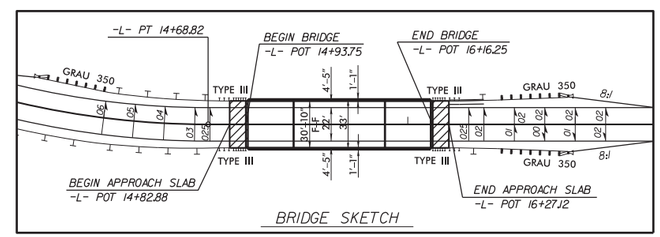

FOR PROFILE, SEE SHEET 5

R:\Roadway\Proj\B5744_Rdy_psh_04.dgn
11/3/2016
USERNAME

DocuSign Envelope ID: 2B277F33-5EBA-415B-841B-4202B6956356

5/14/99

CH ENGINEERING
3220 GLEN ROYAL RD. RALEIGH, NC 27617
TELE 919.788.0224 FAX 919.788.0232
NC LICENSE #P-0189

PROJECT REFERENCE NO.	SHEET NO.
B-5744	5

ROADWAY DESIGN ENGINEER
11/3/2016
NORTH CAROLINA PROFESSIONAL SEAL 16689 ENGINEER BRIAN ALLEN WILES
DocuSigned by: Brian A Wiles
11/3/2016

HYDRAULICS ENGINEER
NORTH CAROLINA PROFESSIONAL SEAL 31025 ENGINEER KAREN HEFNER
DocuSigned by: Karen Hefner
11/3/2016

DOCUMENT NOT CONSIDERED FINAL UNLESS ALL SIGNATURES COMPLETED

BRIDGE HYDRAULIC DATA

DESIGN DISCHARGE	=	2700	CFS
DESIGN FREQUENCY	=	25	YRS
DESIGN HW ELEVATION	=	141.5	FT
BASE DISCHARGE	=	4000	CFS
BASE FREQUENCY	=	100	YRS
BASE HW ELEVATION	=	142.58	FT
OVERTOPPING DISCHARGE	=	4825	CFS
OVERTOPPING FREQUENCY	=	100+	YRS
OVERTOPPING ELEVATION	=	142.9	FT
DATE OF SURVEY	=	135.8	
W.S. ELEVATION AT DATE OF SURVEY	=	2/2/2016	FT

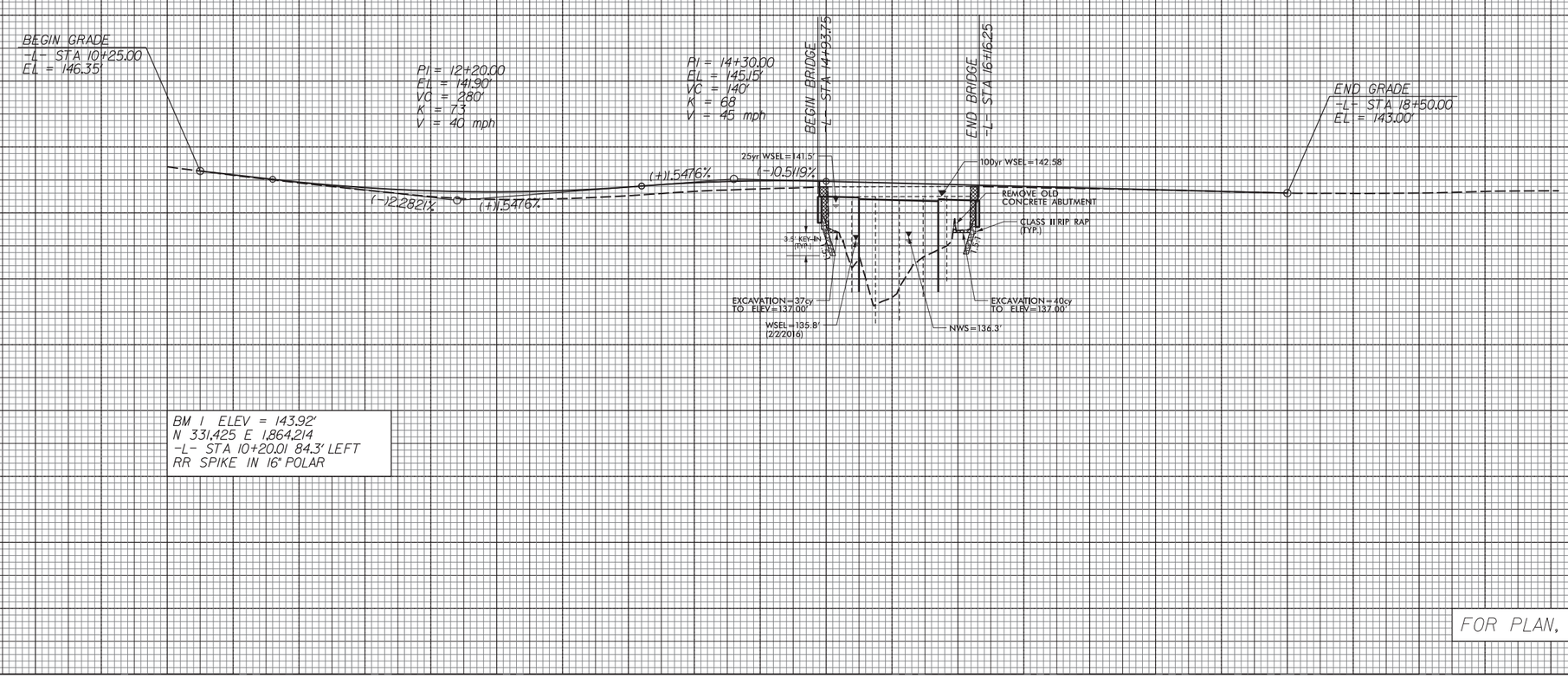

BM 1 ELEV = 143.92'
N 331,425 E 1,864,214
-L- STA 10+20.01 84.3' LEFT
RR SPIKE IN 16" POLAR

FOR PLAN, SEE SHEET 4

11/3/2016
R:\Roadway\Proj\B5744_Rdy_pf1_05.dgn
USERNAME

PROJ. REFERENCE NO.	SHEET NO.
B-5744	TMP-1

THE FOLLOWING ROADWAY STANDARDS AS APPEAR IN "ROADWAY STANDARD DRAWINGS" - PROJECT SERVICES UNIT - N.C. DEPARTMENT OF TRANSPORTATION - RALEIGH, N.C., DATED JANUARY 2012 ARE APPLICABLE TO THIS PROJECT AND BY REFERENCE HEREBY ARE CONSIDERED A PART OF THESE PLANS:

STD.	TITLE
1101.03	TEMPORARY ROAD CLOSURES
1110.01	STATIONARY WORK ZONE SIGNS
1145.01	BARRICADES
1205.01	PAVEMENT MARKINGS - LINE TYPES AND OFFSETS
1205.12	PAVEMENT MARKINGS - BRIDGES
1250.01	RAISED PAVEMENT MARKERS - INSTALLATION SPACING
1251.01	RAISED PAVEMENT MARKERS - TYPES AND MOUNTING
1261.01	GUARDRAIL AND BARRIER DELINEATORS - INSTALLATION SPACING
1261.02	GUARDRAIL AND BARRIER DELINEATORS - TYPES AND MOUNTING
1262.01	GUARDRAIL END DELINEATION

GENERAL NOTES

CHANGES MAY BE REQUIRED WHEN PHYSICAL DIMENSIONS IN THE DETAIL DRAWINGS, STANDARD DETAILS, AND ROADWAY DETAILS ARE NOT ATTAINABLE TO MEET FIELD CONDITIONS OR RESULT IN DUPLICATE OR UNDESIRED OVERLAPPING OF DEVICES. MODIFICATION MAY INCLUDE: MOVING, SUPPLEMENTING, COVERING, OR REMOVAL OF DEVICES AS DIRECTED BY THE ENGINEER.

THE FOLLOWING GENERAL NOTES APPLY AT ALL TIMES FOR THE DURATION OF THE CONSTRUCTION PROJECT EXCEPT WHEN OTHERWISE NOTED IN THE PLAN OR DIRECTED BY THE ENGINEER.

TRAFFIC PATTERN ALTERATIONS

A) NOTIFY THE ENGINEER TWENTY ONE (21) CALENDAR DAYS PRIOR TO ANY TRAFFIC PATTEN ALTERATION.

SIGNING

B) PROVIDE SIGNING AND DEVICES REQUIRED TO CLOSE THE ROAD ACCORDING TO THE ROADWAY STANDARD DRAWINGS AND TRAFFIC CONTROL PLANS.

PROVIDE SIGNING REQUIRED FOR THE OFF-SITE DETOUR ROUTE AS SHOWN IN THE TRAFFIC CONTROL PLANS.

C) COVER OR REMOVE ALL SIGNS AND DEVICES REQUIRED TO CLOSE THE ROAD WHEN ROAD CLOSURE IS NOT IN OPERATION.

COVER OR REMOVE ALL SIGNS REQUIRED FOR THE OFF-SITE DETOUR WHEN THE DETOUR IS NOT IN OPERATION.

D) ENSURE ALL NECESSARY SIGNING IS IN PLACE PRIOR TO ALTERING ANY TRAFFIC PATTERN.

TRAFFIC CONTROL DEVICES

E) PLACE TYPE III BARRICADES, WITH "ROAD CLOSED" SIGN R11-2 ATTACHED, OF SUFFICIENT LENGTH TO CLOSE ENTIRE ROADWAY.

PAVEMENT MARKINGS AND MARKERS

F) INSTALL PAVEMENT MARKINGS ON THE FINAL SURFACE.

PHASING

STEP 1: USING ROADWAY STANDARD DRAWING NUMBER 1101.03, SHEET 1 OF 9, AND TMP-2, PERFORM THE FOLLOWING:
- INSTALL ALL ROAD CLOSURE AND DETOUR SIGNING INCLUDING BARRICADES
- CLOSE SR 1615 (HASTY ROAD)
- PLACE TRAFFIC ONTO OFF-SITE DETOUR

STEP 2: REMOVE EXISTING BRIDGE #050 AND CONSTRUCT THE PROPOSED BRIDGE AND APPROACHES AS SHOWN IN THE CONSTRUCTION PLANS.

STEP 3: INSTALL FINAL PAVEMENT MARKINGS.

STEP 4: REMOVE ALL TRAFFIC CONTROL SIGNING AND DEVICES AND RE-OPEN SR 1615 (HASTY ROAD) TO THE FINAL TRAFFIC PATTERN.

PAVEMENT MARKING

THERMOPLASTIC PAVEMENT MARKING LINES (4", 90 MILS)	1650 LF
THERMOPLASTIC PAVEMENT MARKING LINES (4", 120 MILS)	1650 LF
PERMANENT RAISED PAVEMENT MARKERS	20 EACH

APPROVED: DocuSigned by: Brian A Wilks 11/3/2016 12:07:12 PM EDT

DATE: 11/3/2016

SEAL

NORTH CAROLINA PROFESSIONAL SEAL 16689 ENGINEER BRIAN ALLEN WILKS

DOCUMENT NOT CONSIDERED FINAL UNLESS ALL SIGNATURES COMPLETED

DIVISION OF HIGHWAYS · STATE OF NORTH CAROLINA · DEPARTMENT OF TRANSPORTATION · WORK ZONE TRAFFIC CONTROL

TRANSPORTATION OPERATIONS PLAN

11/3/2016
R:\Traffic\TrafficControl\TCP\B5744_TC_TMP.dgn
USERNAME=

PROJ. REFERENCE NO.	SHEET NO.
B-5744	TMP-2

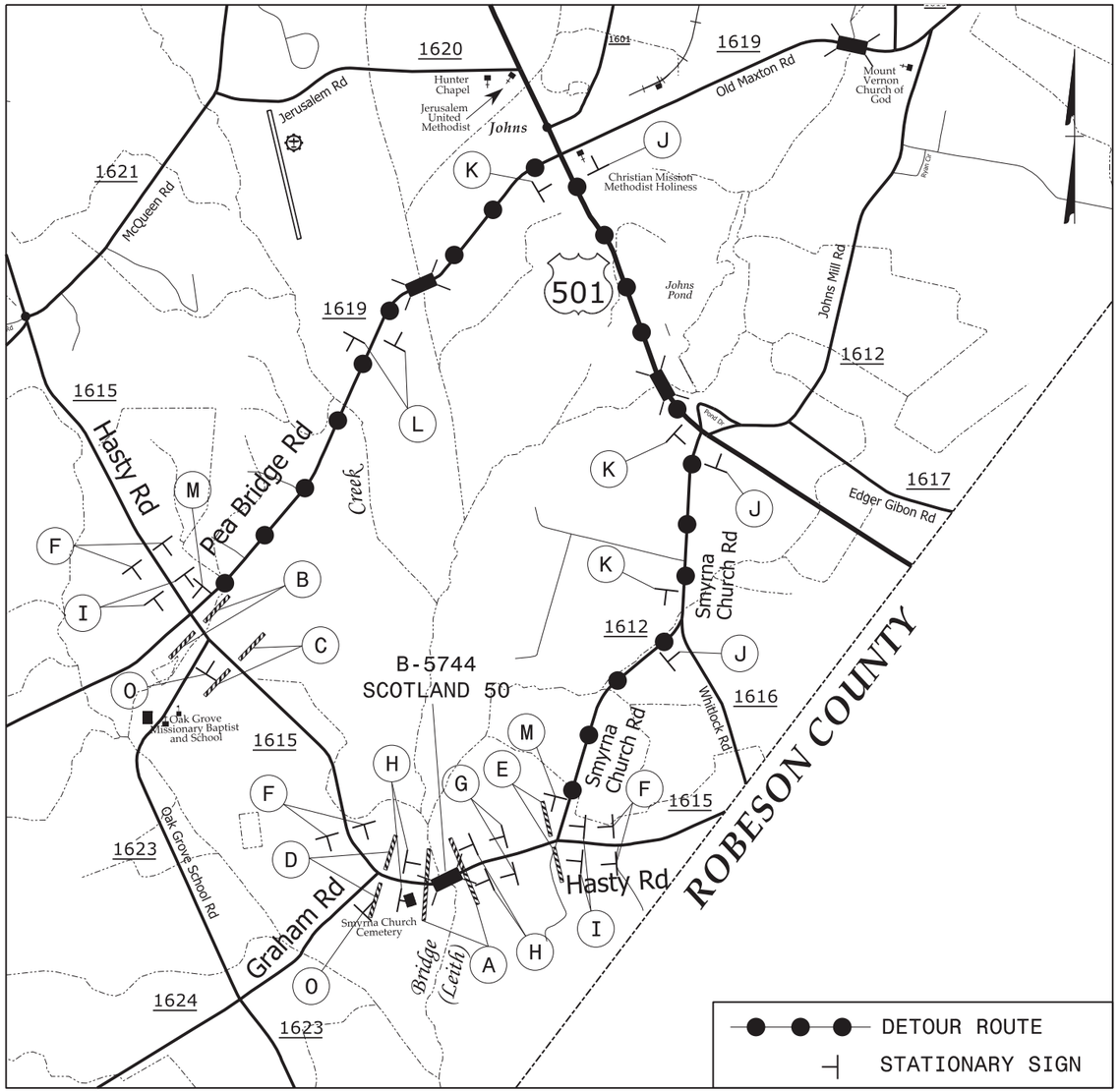

TYPE III BARRICADE

D

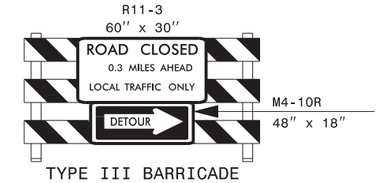

TYPE III BARRICADE

E

F

G

H

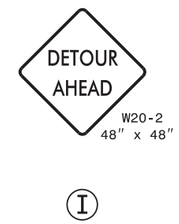

I

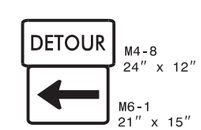

J

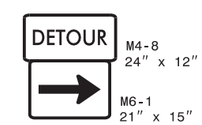

K

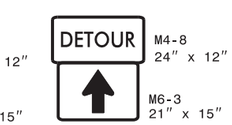

L

M

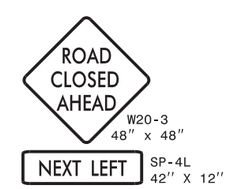

N

O

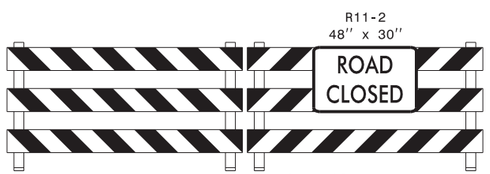

TYPE III BARRICADE(S)

A

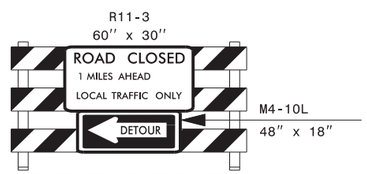

TYPE III BARRICADE

B

TYPE III BARRICADE

C

APPROVED: Brian A Wiles (DocuSigned by: 3E8D3A3 47F3BB)

DATE: 11/3/2016

SEAL

NORTH CAROLINA PROFESSIONAL SEAL 16689 ENGINEER BRIAN ALLEN WILES

DIVISION OF HIGHWAYS · STATE OF NORTH CAROLINA · DEPARTMENT OF TRANSPORTATION · WORK ZONE TRAFFIC CONTROL

DOCUMENT NOT CONSIDERED FINAL UNLESS ALL SIGNATURES COMPLETED

DETOUR ROUTE AND SIGNS

11/3/2016
R:\Traffic\TrafficControl\TCP\B5744_TC_TMP.dgn
USERNAME:

TIP PROJECT: B-5744

STATE	STATE PROJECT REFERENCE NO.	SHEET NO.	TOTAL SHEETS
N.C.	B-5744	EC-1	

STATE PROJ. NO.	F. A. PROJ. NO.	DESCRIPTION
45700.1.1		PE
45700.2.1		RW

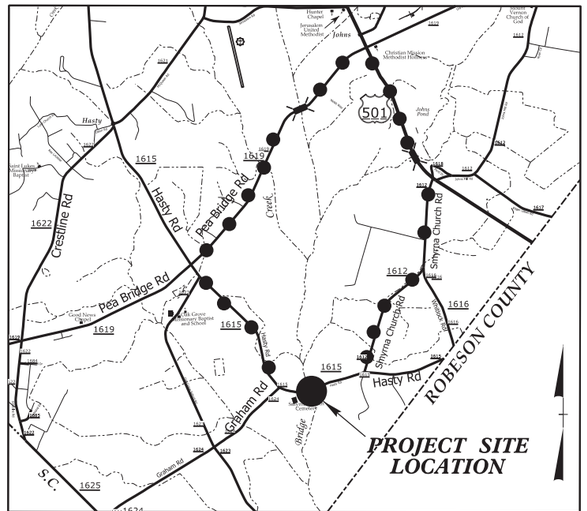

VICINITY MAP

OFF-SITE DETOUR ROUTE

N.T.S.

RW Plans 07/01/2016

STATE OF NORTH CAROLINA
DIVISION OF HIGHWAYS

PLAN FOR PROPOSED
HIGHWAY EROSION CONTROL

SCOTLAND COUNTY

LOCATION: BRIDGE NO. 820050 ON SR 1615 (HASTY ROAD) OVER BRIDGE CREEK (aka LEITH CREEK)

TYPE OF WORK: GRADING, DRAINAGE, PAVING AND STRUCTURE

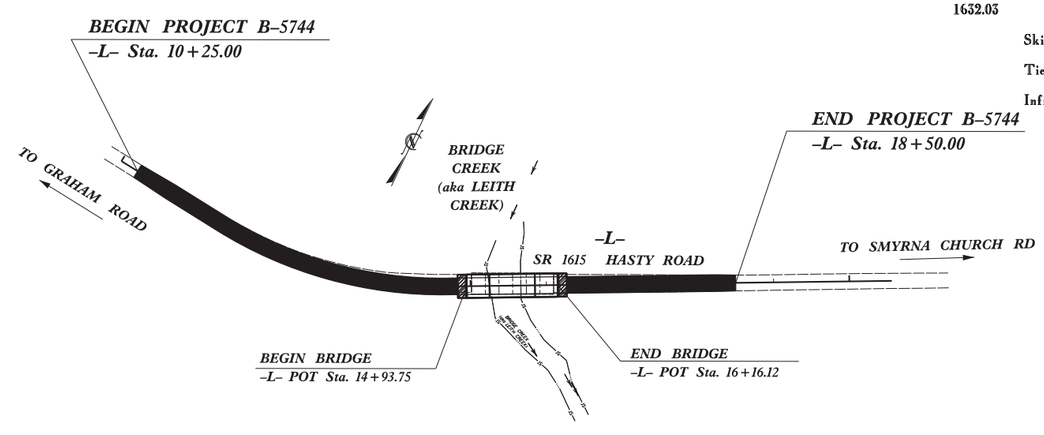

EROSION AND SEDIMENT CONTROL MEASURES

Std. #	Description	Symbol
1630.03	Temporary Silt Ditch	TSD
1630.05	Temporary Diversion	TD
1605.01	Temporary Silt Fence	
1606.01	Special Sediment Control Fence	
1622.01	Temporary Berms and Slope Drains	
1630.02	Silt Basin Type B	
1633.01	Temporary Rock Silt Check Type-A	
	Temporary Rock Silt Check Type-A with Matting and Polyacrylamide (PAM)	
1633.02	Temporary Rock Silt Check Type-B	
	Wattle / Coir Fiber Wattle	EW CFW
	Wattle / Coir Fiber Wattle with Polyacrylamide (PAM)	
1634.01	Temporary Rock Sediment Dam Type-A	
1634.02	Temporary Rock Sediment Dam Type-B	
1635.01	Rock Pipe Inlet Sediment Trap Type-A	
1635.02	Rock Pipe Inlet Sediment Trap Type-B	
1630.04	Stilling Basin	
1630.06	Special Stilling Basin	
	Rock Inlet Sediment Trap:	
1632.01	Type A	A
1632.02	Type B	B
1632.03	Type C	C
	Skimmer Basin	
	Tiered Skimmer Basin	
	Infiltration Basin	

THIS PROJECT CONTAINS EROSION CONTROL PLANS FOR CLEARING AND GRUBBING PHASE OF CONSTRUCTION.

GRAPHIC SCALE

50 0 100
PLANS

50 0 100
PROFILE (HORIZONTAL)

10 0 20
PROFILE (VERTICAL)

THESE EROSION AND SEDIMENT CONTROL PLANS COMPLY WITH THE REGULATIONS SET FORTH BY THE NCG-010000 GENERAL CONSTRUCTION PERMIT EFFECTIVE AUGUST 3, 2011 AND ISSUED BY THE NORTH CAROLINA DEPARTMENT OF ENVIRONMENT AND NATURAL RESOURCES DIVISION OF WATER RESOURCES.

Prepared in the Office of:

MI ENGINEERING
1011 SCHAUB DRIVE, SUITE 100
RALEIGH, NC 27606

Designed by:

KAREN HEFNER, PE — NAME
3824 — LEVEL III CERTIFICATION NO.

Reviewed in the Office of:

ROADSIDE ENVIRONMENTAL UNIT
1 South Wilmington St.
Raleigh, NC 27611

2012 STANDARD SPECIFICATIONS

Reviewed by:

NOELLE RING

Roadway Standard Drawings

The following roadway english standards as appear in "Roadway Standard Drawings"– Roadway Design Unit – N. C. Department of Transportation – Raleigh, N. C., dated January 2012 and the latest revison thereto are applicable to this project and by reference hereby are considered a part of these plans.

1604.01	Railroad Erosion Control Detail	1632.01	Rock Inlet Sediment Trap Type A
1605.01	Temporary Silt Fence	1632.02	Rock Inlet Sediment Trap Type B
1606.01	Special Sediment Control Fence	1632.03	Rock Inlet Sediment Trap Type C
1607.01	Gravel Construction Entrance	1633.01	Temporary Rock Silt Check Type A
1622.01	Temporary Berms and Slope Drains	1633.02	Temporary Rock Silt Check Type B
1630.01	Riser Basin	1634.01	Temporary Rock Sediment Dam Type A
1630.02	Silt Basin Type B	1634.02	Temporary Rock Sediment Dam Type B
1630.03	Temporary Silt Ditch	1635.01	Rock Pipe Inlet Sediment Trap Type A
1630.04	Stilling Basin	1635.02	Rock Pipe Inlet Sediment Trap Type B
1630.05	Temporary Diversion	1640.01	Coir Fiber Baffle
1630.06	Special Stilling Basin	1645.01	Temporary Stream Crossing
1631.01	Matting Installation		

$$$$$$$$SYSTIME$$$$$$$$
$$$$$$$$USERNAME$$$$$$$$

PROJECT REFERENCE NO.	SHEET NO.
B-5744	EC-2
R/W SHEET NO.	___
ROADWAY DESIGN ENGINEER	HYDRAULICS ENGINEER

COIR FIBER WATTLE WITH POLYACRYLAMIDE (PAM) DETAIL

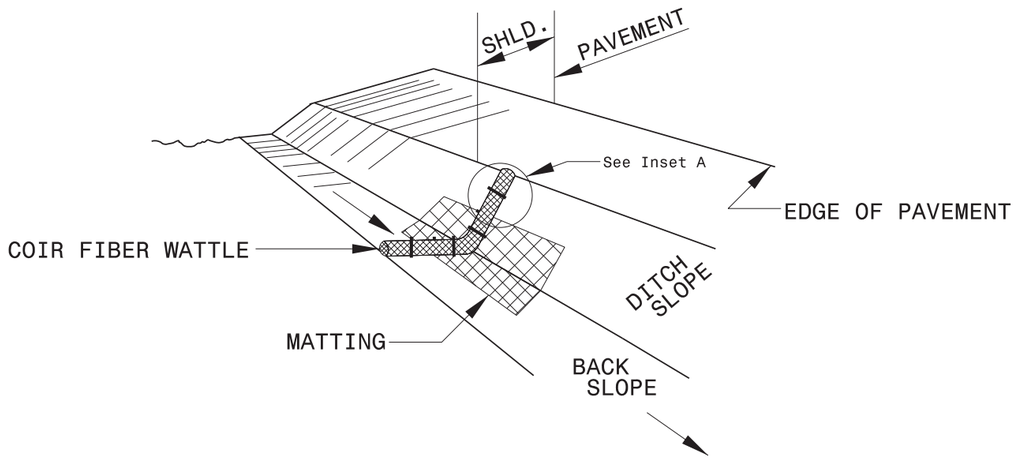

ISOMETRIC VIEW

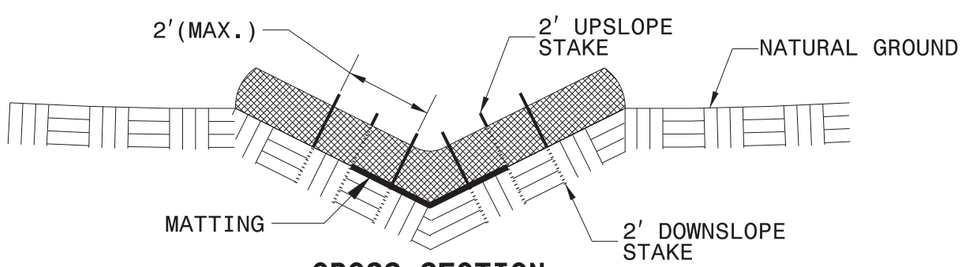

CROSS SECTION VEE DITCH

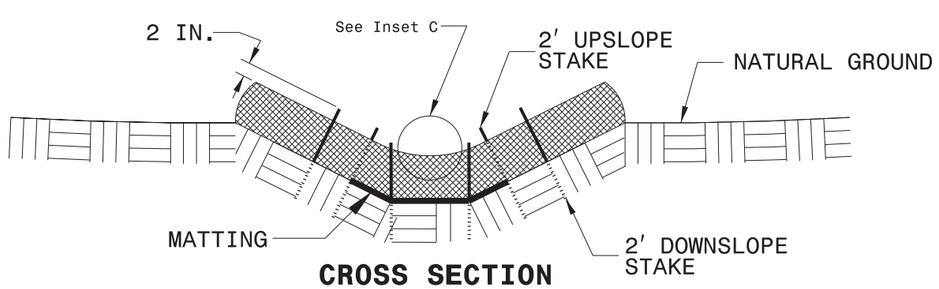

CROSS SECTION TRAPEZOIDAL DITCH

NOTES;

USE MINIMUM 12 IN. DIAMETER COIR FIBER (COCONUT FIBER) WATTLE.

USE 2 FT. WOODEN STAKES WITH A 2 IN. BY 2 IN. NOMINAL CROSS SECTION.

ONLY INSTALL WATTLE(S) TO A HEIGHT IN DITCH SO FLOW WILL NOT WASH AROUND WATTLE AND SCOUR DITCH SLOPES AND AS DIRECTED.

INSTALL A MINIMUM OF 2 UPSLOPE STAKES AND 4 DOWNSLOPE STAKES AT AN ANGLE TO WEDGE WATTLE TO BOTTOM OF DITCH.

PROVIDE STAPLES MADE OF 0.125 IN. DIAMETER STEEL WIRE FORMED INTO A U SHAPE NOT LESS THAN 12″ IN LENGTH.

INSTALL STAPLES APPROXIMATELY EVERY 1 LINEAR FOOT ON BOTH SIDES OF WATTLE AND AT EACH END TO SECURE IT TO THE SOIL.

INSTALL MATTING IN ACCORDANCE WITH SECTION 1631 OF THE STANDARD SPECIFICATIONS.

PRIOR TO POLYACRYLAMIDE (PAM) APPLICATION, OBTAIN A SOIL SAMPLE FROM PROJECT LOCATION, AND FROM OFFSITE MATERIAL, AND ANALYZE FOR APPROPRIATE PAM FLOCCULANT TO BE APPLIED TO EACH WATTLE.

INITIALLY APPLY 2 OUNCES OF ANIONIC OR NEUTRALLY CHARGED PAM OVER WATTLE WHERE WATER WILL FLOW AND 1 OUNCE OF PAM ON MATTING ON EACH SIDE OF WATTLE. REAPPLY PAM AFTER EVERY RAINFALL EVENT THAT IS EQUAL TO OR EXCEEDS 0.50 IN.

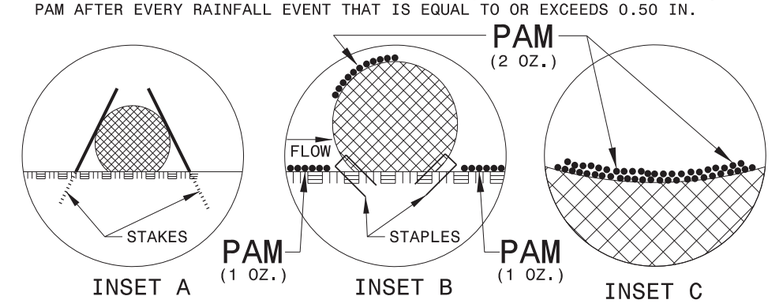

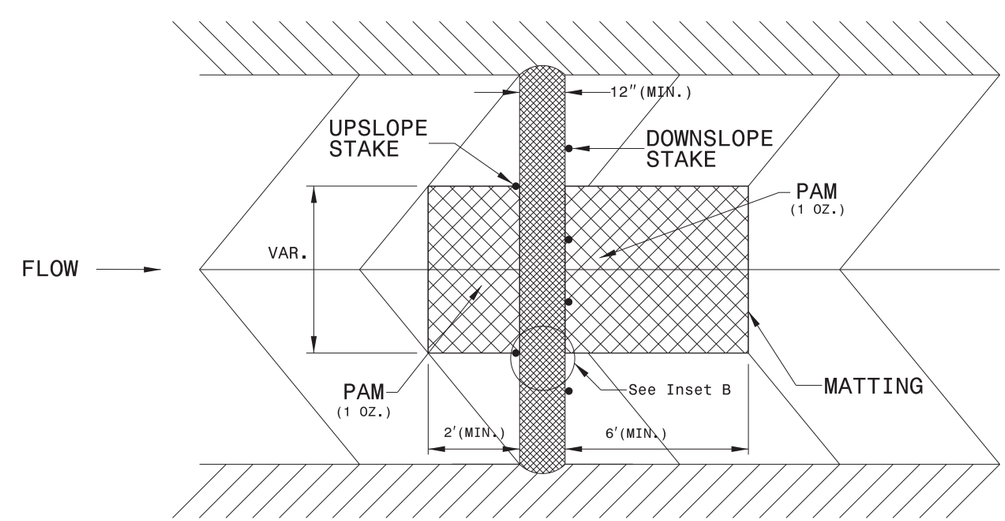

TOP VIEW

PROJECT REFERENCE NO.	SHEET NO.
B-5744	EC-2G
R/W SHEET NO.	4
ROADWAY DESIGN ENGINEER	HYDRAULICS ENGINEER

MATTING INSTALLATION DETAIL

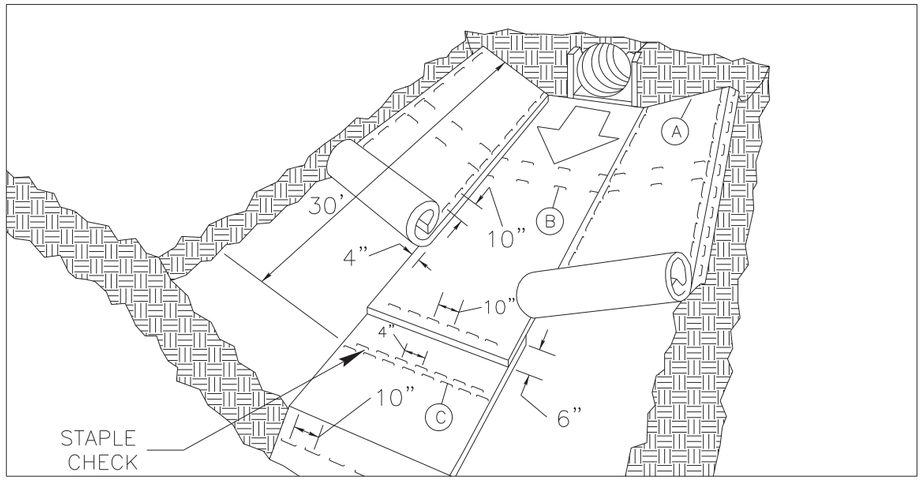

MATTING IN DITCHES

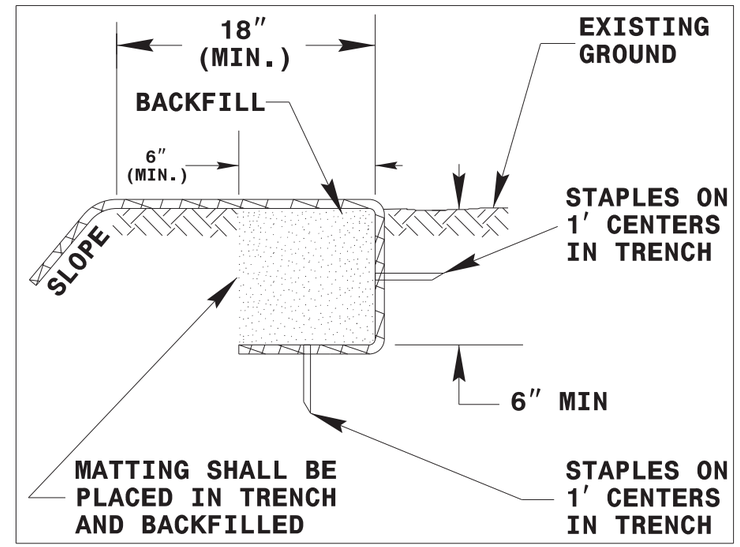

DIAGRAM A

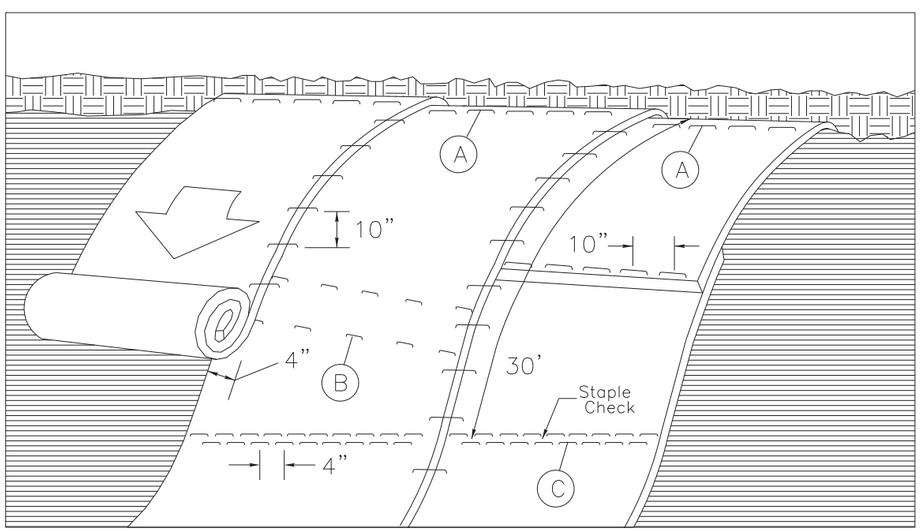

MATTING ON SLOPES

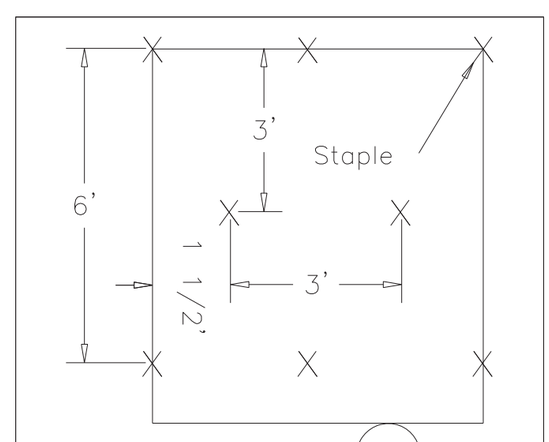

DIAGRAM B

Staple Check Pattern

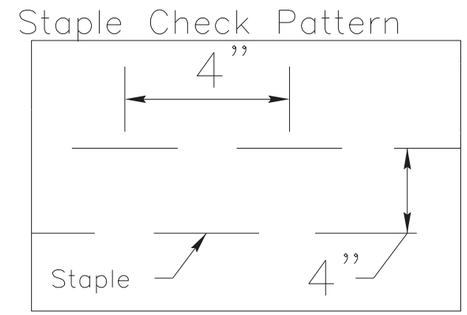

DIAGRAM C

NOTES:

THIS DETAIL APPLIES TO STRAW, EXCELSIOR, AND PERMANENT SOIL REINFORCEMENT MAT (PSRM) INSTALLATION.

STAPLES SHALL BE NO. 11 GAUGE STEEL WIRE FORMED INTO A "U" SHAPE WITH A MINIMUM THROAT WIDTH OF 1 INCH AND NOT LESS THAN 6 INCHES IN LENGTH.

NOT TO SCALE

PROJECT REFERENCE NO.	SHEET NO.
B-5744	EC-3
ROADWAY DESIGN ENGINEER	HYDRAULICS ENGINEER

DIVISION OF HIGHWAYS
STATE OF NORTH CAROLINA

SOIL STABILIZATION TIMEFRAMES

SITE DESCRIPTION	STABILIZATION TIME	TIMEFRAME EXCEPTIONS
PERIMETER DIKES, SWALES, DITCHES AND SLOPES	7 DAYS	NONE
HIGH QUALITY WATER (HQW) ZONES	7 DAYS	NONE
SLOPES STEEPER THAN 3:1	7 DAYS	IF SLOPES ARE 10' OR LESS IN LENGTH AND ARE NOT STEEPER THAN 2:1, 14 DAYS ARE ALLOWED.
SLOPES 3:1 OR FLATTER	14 DAYS	7 DAYS FOR SLOPES GREATER THAN 50' IN LENGTH.
ALL OTHER AREAS WITH SLOPES FLATTER THAN 4:1	14 DAYS	NONE, EXCEPT FOR PERIMETERS AND HQW ZONES.

PROJECT REFERENCE NO.	SHEET NO.
B-5744	EC-3A
ROADWAY DESIGN ENGINEER	HYDRAULICS ENGINEER

DIVISION OF HIGHWAYS
STATE OF NORTH CAROLINA

SOIL STABILIZATION SUMMARY SHEET

MATTING FOR EROSION CONTROL

CONST SHEET NO.	LINE	FROM STATION	TO STATION	SIDE	ESTIMATE (SY)
4	-L-	10+25	11+75	LT	210
4	-L-	10+25	11+50	LT	210
				SUBTOTAL	420
MISCELLANEOUS MATTING TO BE INSTALLED AS DIRECTED BY THE ENGINEER					6265
				TOTAL	6685
				SAY	6685

MATTING FOR EROSION CONTROL

CONST SHEET NO.	LINE	FROM STATION	TO STATION	SIDE	ESTIMATE (SY)

5/14/99

PROJECT REFERENCE NO.	SHEET NO.
B-5744	EC-04/CONST.04
R/W SHEET NO.	
ROADWAY DESIGN ENGINEER	HYDRAULICS ENGINEER

CLEARING AND GRUBBING
EROSION CONTROL FOR
CONSTRUCTION SHEET _4_

NOTE:
PLACE TEMPORARY ROCK SEDIMENT DAMS TYPE – B AND TEMPORARY ROCK SILT CHECKS TYPE – A AT DRAINAGE OUTLETS.

NOTE:
PERIMETER EROSION CONTROL MEASURES SHALL BE INSTALLED DURING CLEARING AND GRUBBING PHASE.

NOTE:
UTILIZE TEMPORARY SEDIMENT BASIN OR SPECIAL STILLING BASIN(S) AS STILLING BASIN WHERE APPLICABLE.

CLEARING & GRUBBING PLAN

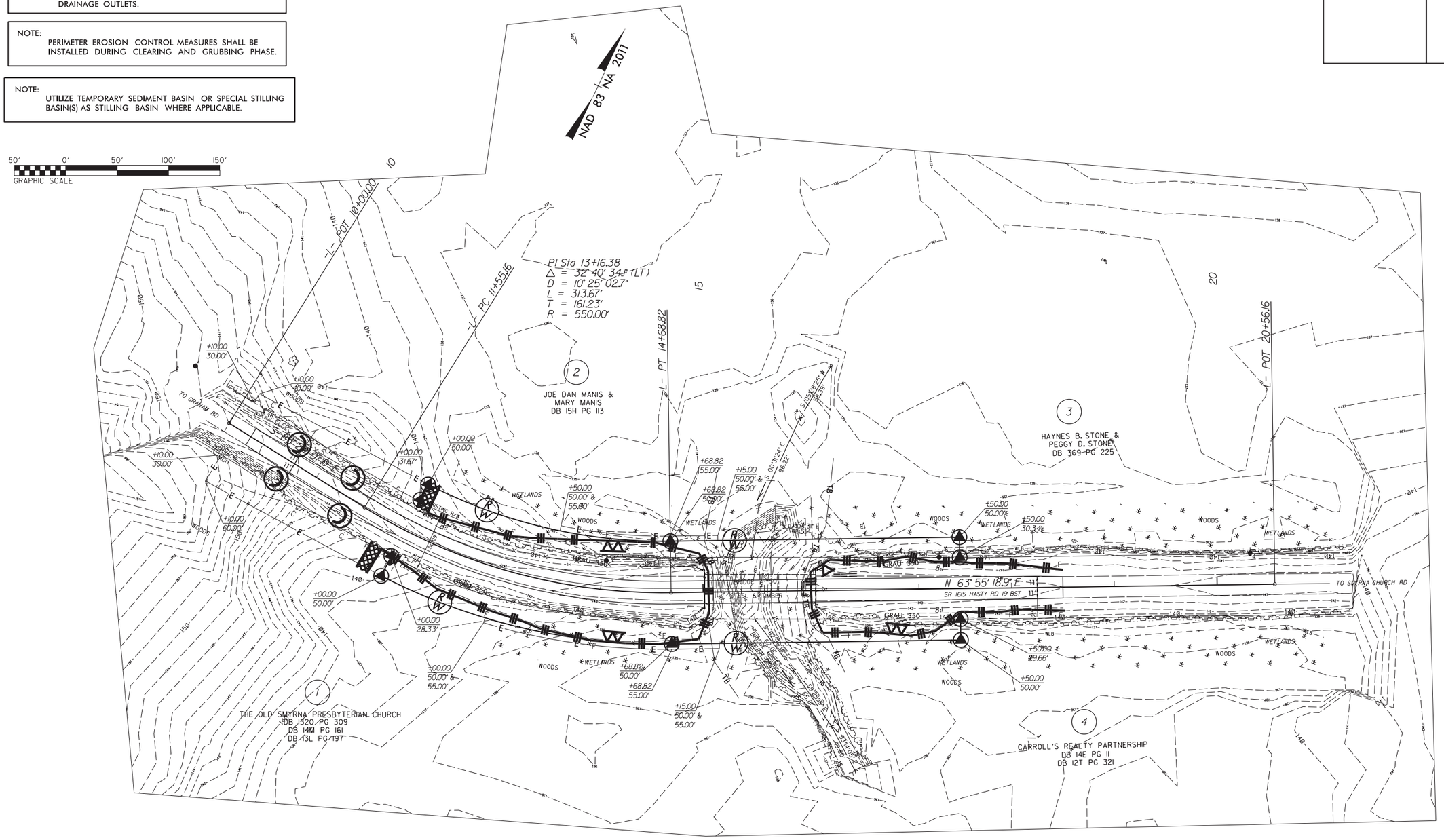

$$$$$$SYSTIME$$$$$
$$$$$$FILENAME$$$$DGN$$$$$$$$$$$$$$$$$$$$

PROJECT REFERENCE NO.	SHEET NO.
B-5744	EC-05/CONST.04
R/W SHEET NO.	4
ROADWAY DESIGN ENGINEER	HYDRAULICS ENGINEER

NOTES: ANY DEVIATION FROM OPTIONS GIVEN WILL REQUIRE PRIOR APPROVAL BY ENGINEER.

ADDITIONAL EROSION CONTROL DEVICES MAY NEED TO BE INSTALLED AS DIRECTED BY THE ENGINEER.

FINAL GRADE PLAN

NOTE:
PLACE TEMPORARY ROCK SEDIMENT DAMS TYPE – B AND TEMPORARY ROCK SILT CHECKS TYPE – A AT DRAINAGE OUTLETS.

NOTE:
UTILIZE TEMPORARY SEDIMENT BASIN OR SPECIAL STILLING BASIN(S) AS STILLING BASIN WHERE APPLICABLE.

INSTALL FILTRATION GEOTEXTILE UNDER TEMPORARY ROCK SILT CHECK(S) TYPE A IN PERMITTED WETLANDS.

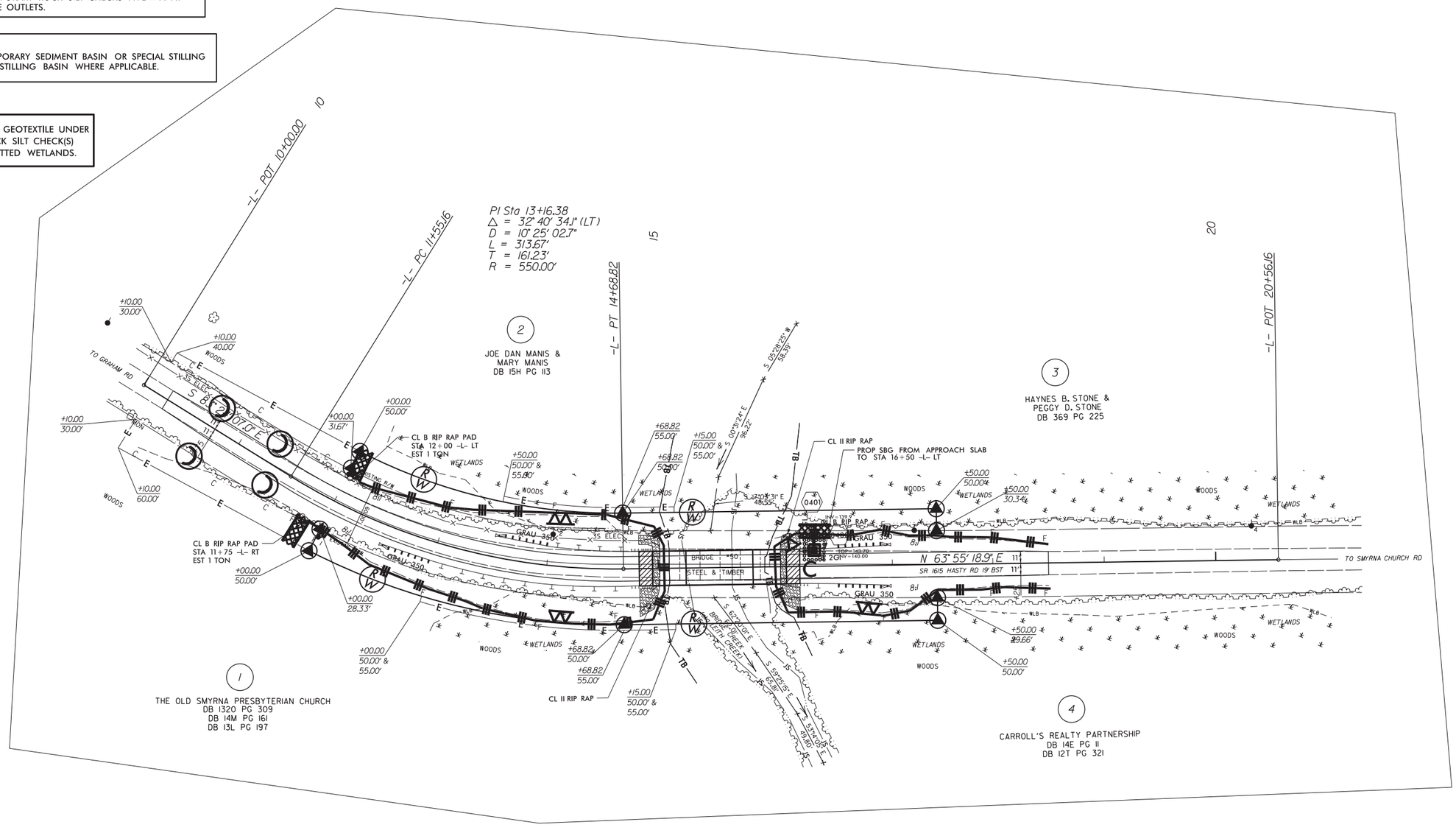

50' 0' 50' 100' 150'
GRAPHIC SCALE

09/08/99

TIP PROJECT: B-5744

T.I.P. NO.	SHEET NO.
B-5744	UO-01

NOTE:
ALL UTILITY WORK SHOWN ON THIS SHEET IS DONE BY OTHERS.
NO PAYMENT WILL BE MADE TO THE CONTRACTOR FOR UTILITY WORK SHOWN ON THIS SHEET.

STATE OF NORTH CAROLINA
DIVISION OF HIGHWAYS

UTILITIES BY OTHERS PLANS
SCOTLAND COUNTY

LOCATION: BRIDGE No. 820050 ON SR 1615 (HASTY ROAD) OVER BRIDGE CREEK (aka LEITH CREEK)

TYPE OF WORK: AERIAL & BURIED UTILITIES

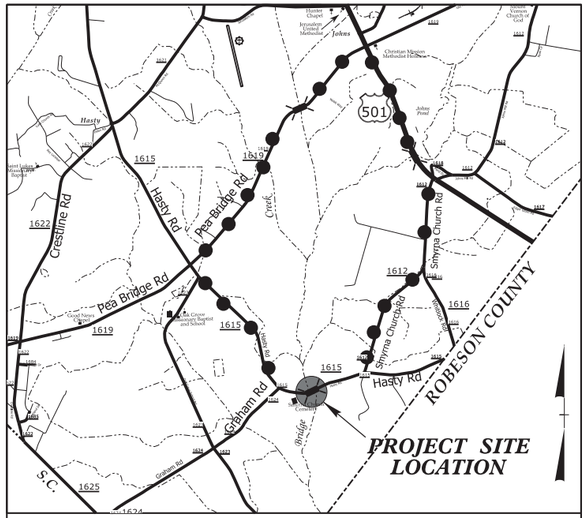

VICINITY MAP
OFF-SITE DETOUR ROUTE
N.T.S.

UO-02

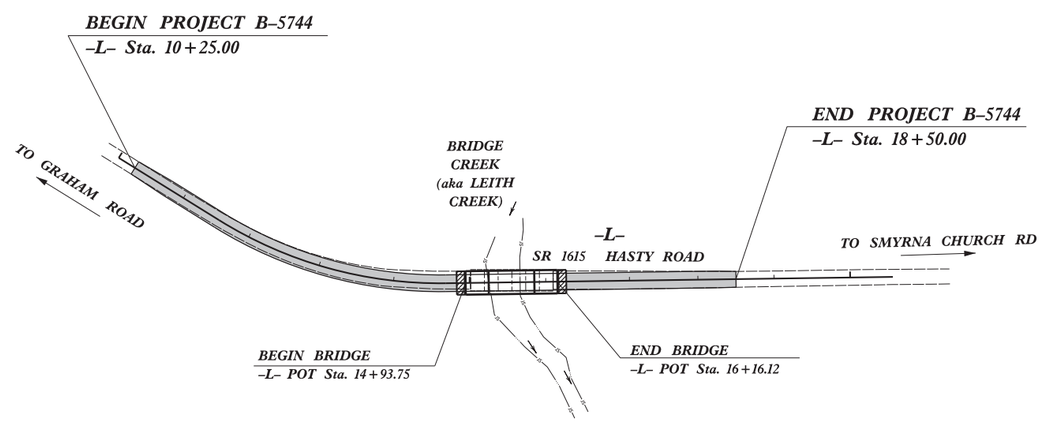

NAD 83/NA 2011

GRAPHIC SCALES

50 25 0 50 100
PLANS

50 25 0 50 100
PROFILE (HORIZONTAL)

10 5 0 10 20
PROFILE (VERTICAL)

INDEX OF SHEETS

SHEET NO.:	DESCRIPTION:
UO-01	TITLE SHEET
UO-02	UBO PLAN SHEET

UTILITY OWNERS ON PROJECT

(A) LUMBEE RIVER EMC - POWER

PLANS PREPARED BY:
CH ENGINEERING
3220 GLEN ROYAL RD. RALEIGH, NC 27617
TELE 919.788.0224 FAX 919.788.0232
NC LICENSE #P-0189

UTILITIES PROJECT ENGINEER
Mary Jo Lee, P.E.

DIVISION OF HIGHWAYS
UTILITIES UNIT
1555 MAIL SERVICES CENTER
RALEIGH NC 27699-1555
PHONE (919) 707-6690
FAX (919) 250-4151

	UTILITIES REGIONAL ENGINEER
	UTILITIES ENGINEER
JAMIE YOW	UTILITIES AREA COORDINATOR
	UTILITIES COORDINATOR

10/27/2016
R:\Utilities\Engineering\UBO\Proj\B5744_ut_tsh_UO01_psh.dgn
USERNAME=

PROJECT REFERENCE NO.	SHEET NO.
B-5744	U0-02

UTILITIES BY OTHERS

NOTE:
ALL PROPOSED UTILITY WORK SHOWN ON THIS SHEET WILL BE DONE BY OTHERS. NO PAYMENT WILL BE MADE TO THE CONTRACTOR FOR PROPOSED UTILITY WORK SHOWN ON THIS SHEET.

CH ENGINEERING
3220 GLEN ROYAL RD. RALEIGH, NC 27617
TELE 919.788.0224 FAX 919.788.0232
NC LICENSE #P-0189

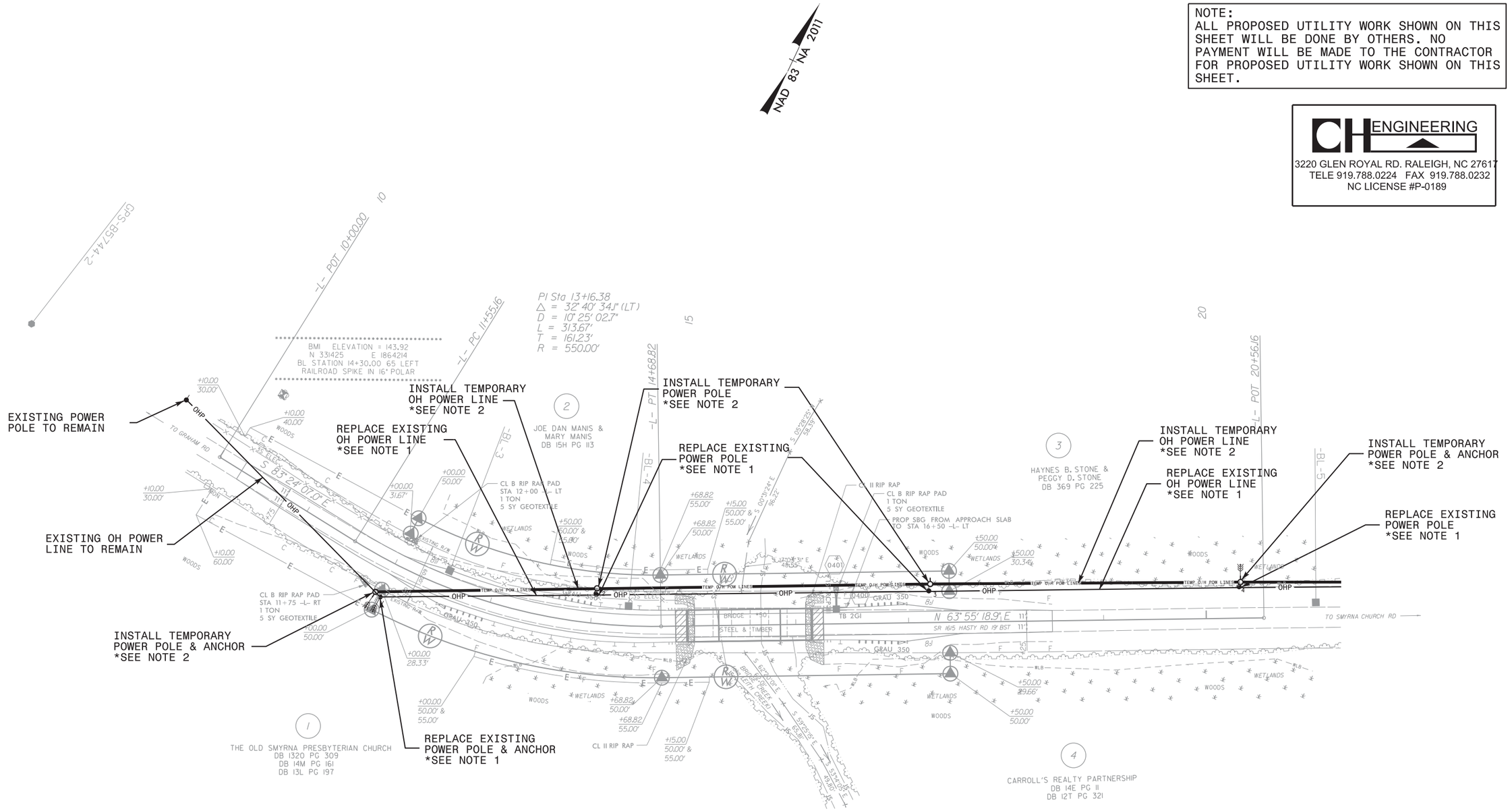

NOTES:
1. LUMBEE RIVER EMC TO REMOVE EXISTING POWER POLES AND OH LINES DURING PRECONSTRUCTION THEN PERMANENTLY INSTALL REPLACEMENT POLES & OH LINES AT PREVIOUS EXISTING LOCATIONS AFTER CONSTRUCTION
2. LUMBEE RIVER EMC TO INSTALL TEMPORARY POLES AND ANCHORS PRIOR TO CONSTRUCTION AND WILL REMOVE AFTER CONSTRUCTION

5/14/99
10/27/2016
USERNAME
ities\Engineering\UBO\Proj\B5744_ut_rdy4_U002_psh.dgn

8/23/99

0 2.5 5	PROJ. REFERENCE NO.	SHEET NO.
	B-5744	X-1

DOCUMENT NOT CONSIDERED FINAL UNLESS ALL SIGNATURES COMPLETED

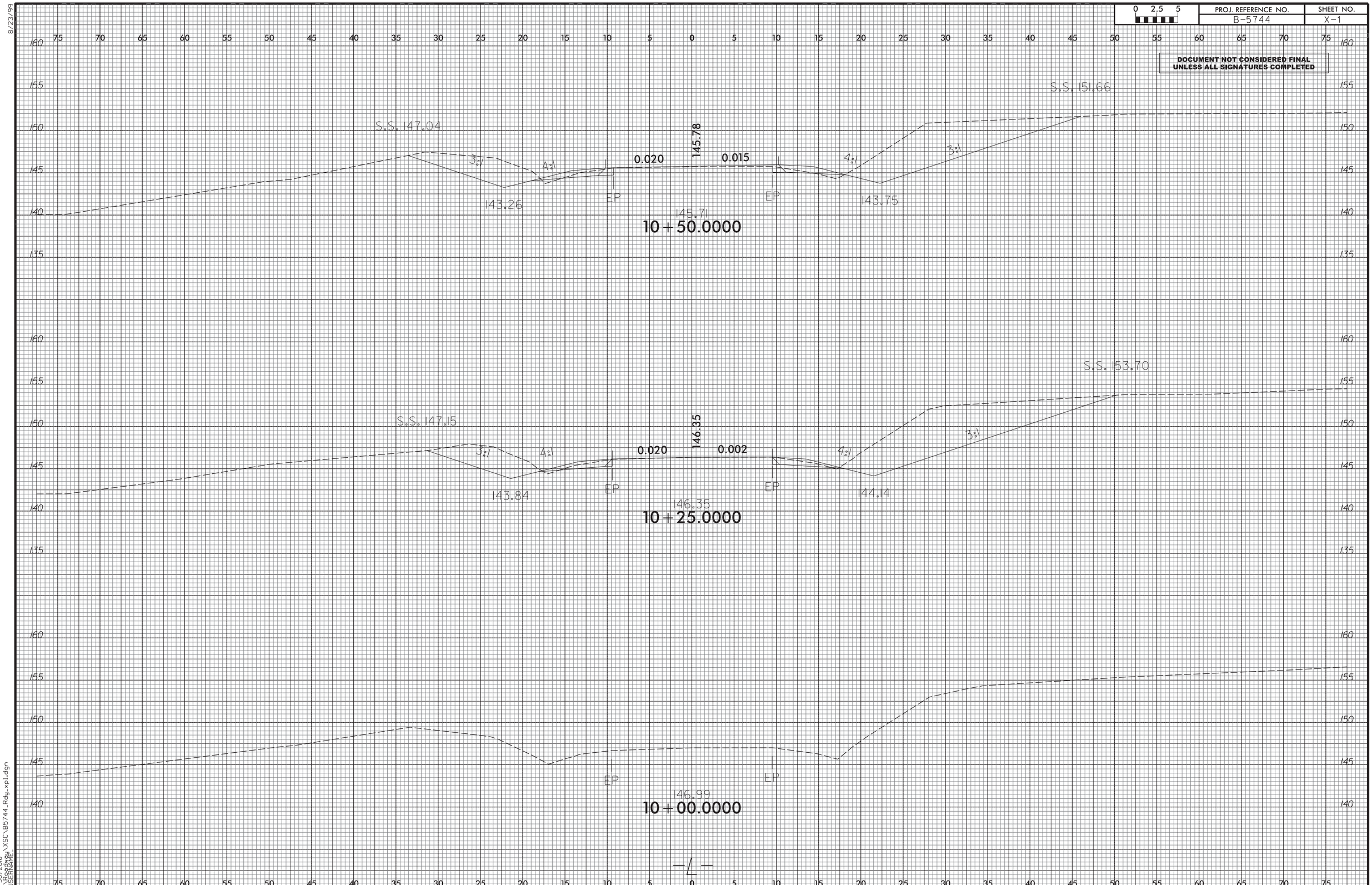

6/30/2016
R:\Roadway\XSC\B5744_Rdy_xpl.dgn
USERNAME=

8/23/99

0 2.5 5	PROJ. REFERENCE NO.	SHEET NO.
	B-5744	X-2

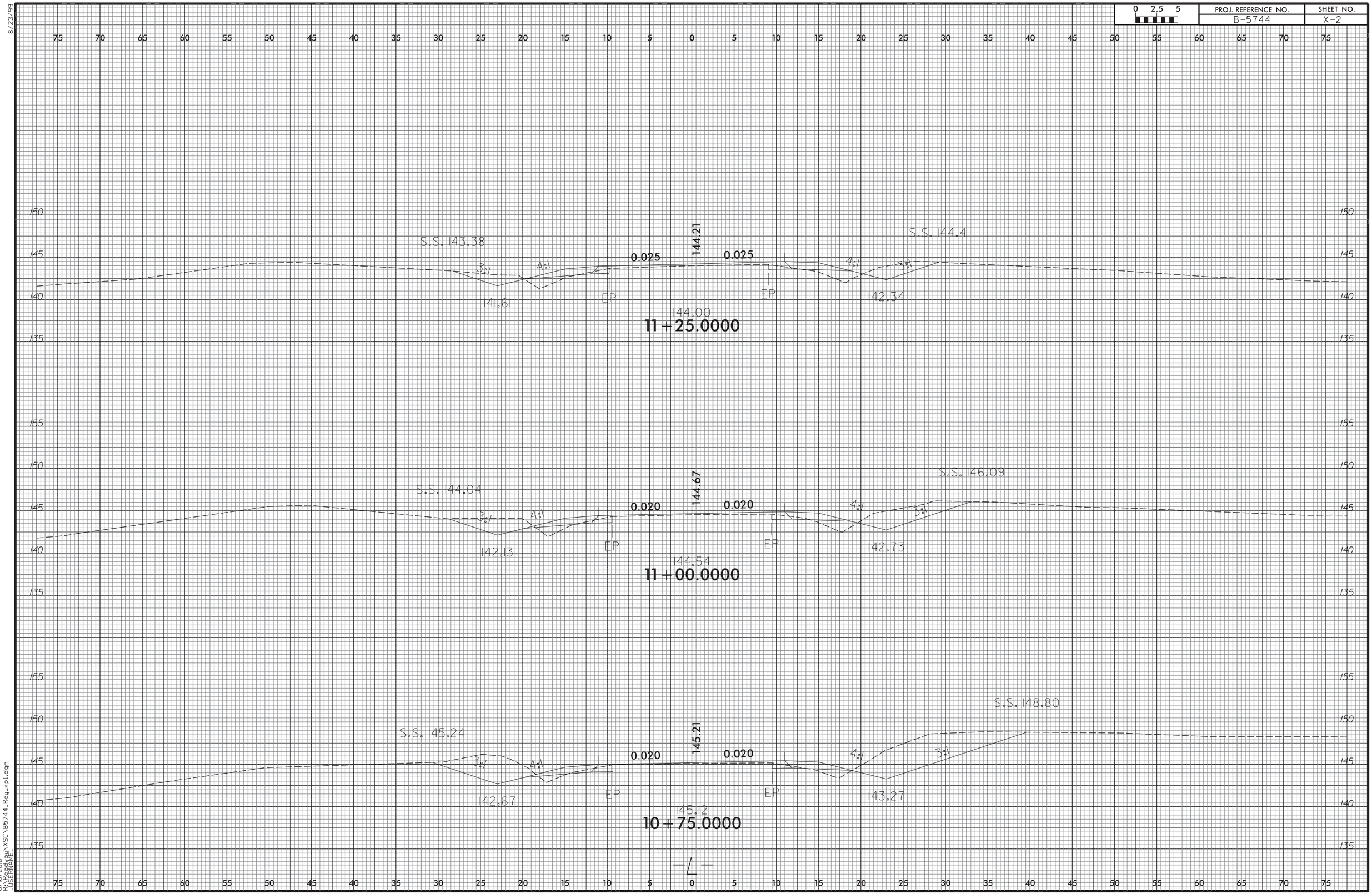

6/16/2016
R:\Roadway\XSC\B5744_Rdy_xpl.dgn
USERNAME=

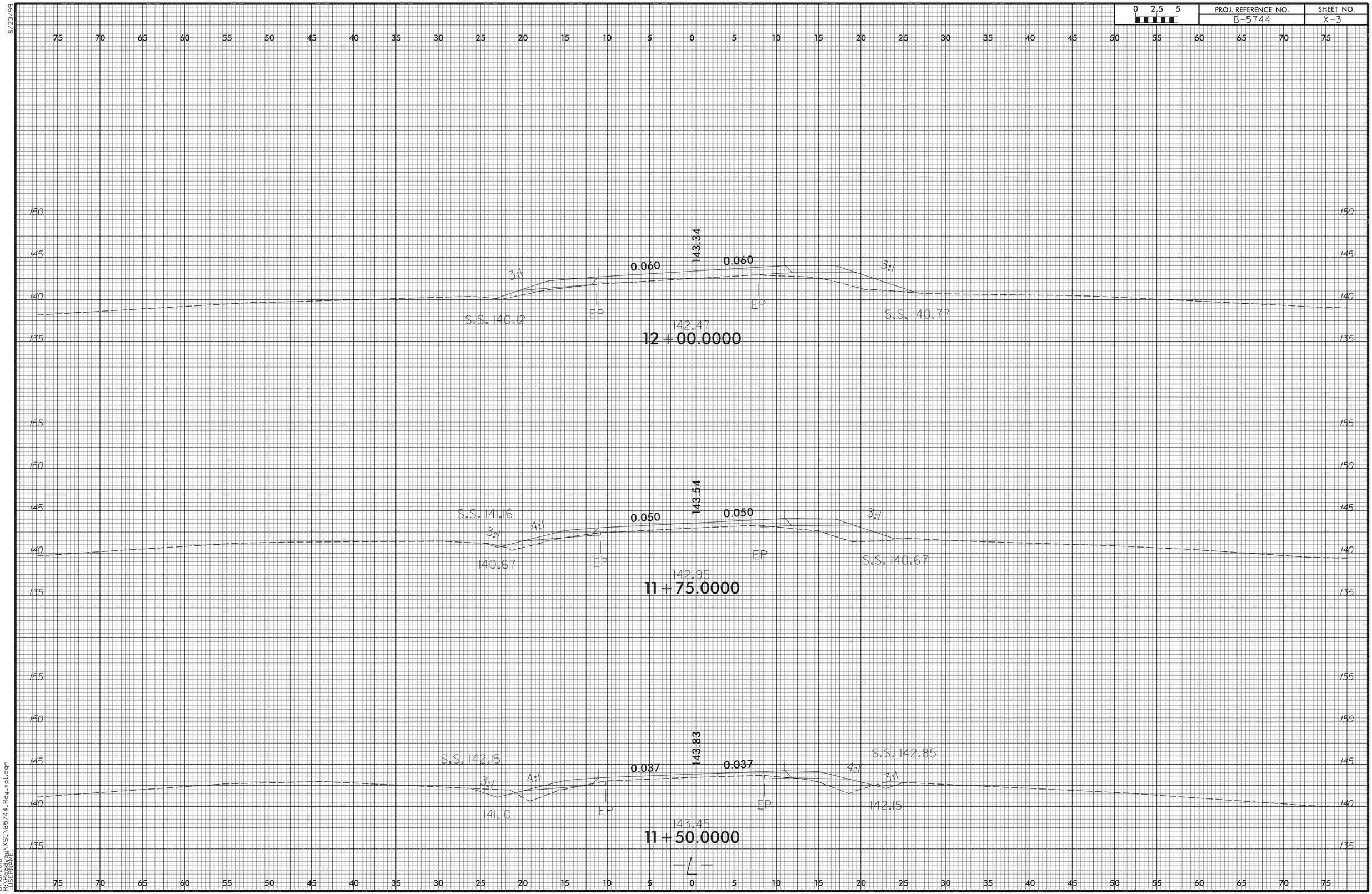

8/23/99
6/16/2016
R:\Roadway\XSC\B5744_Rdy_xpl.dgn
USERNAME=

8/23/99

0 2.5 5	PROJ. REFERENCE NO.	SHEET NO.
	B-5744	X-4

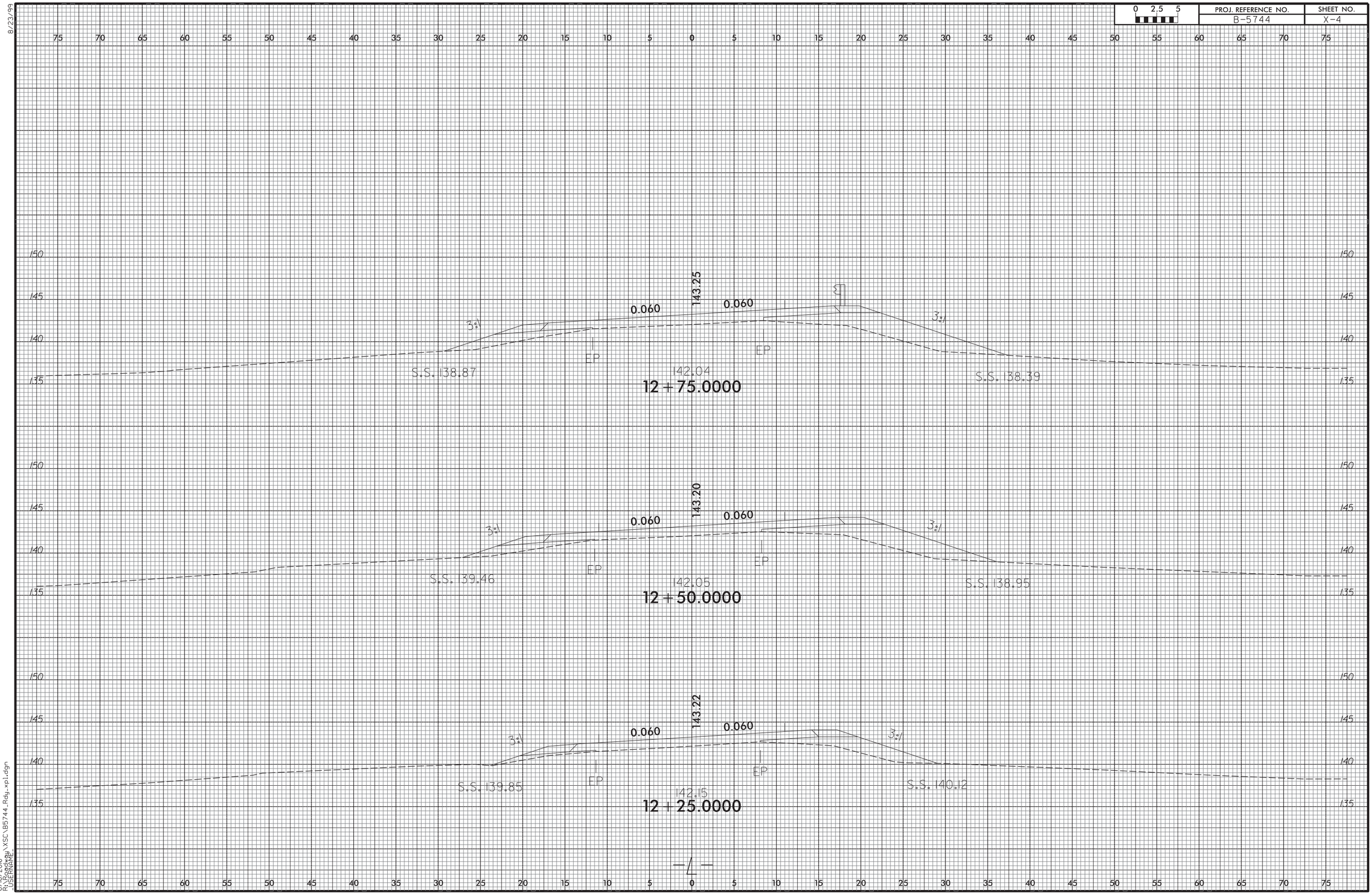

—4—

6/16/2016
R:\Roadway\XSC\B5744_Rdy_xpl.dgn
USERNAME=

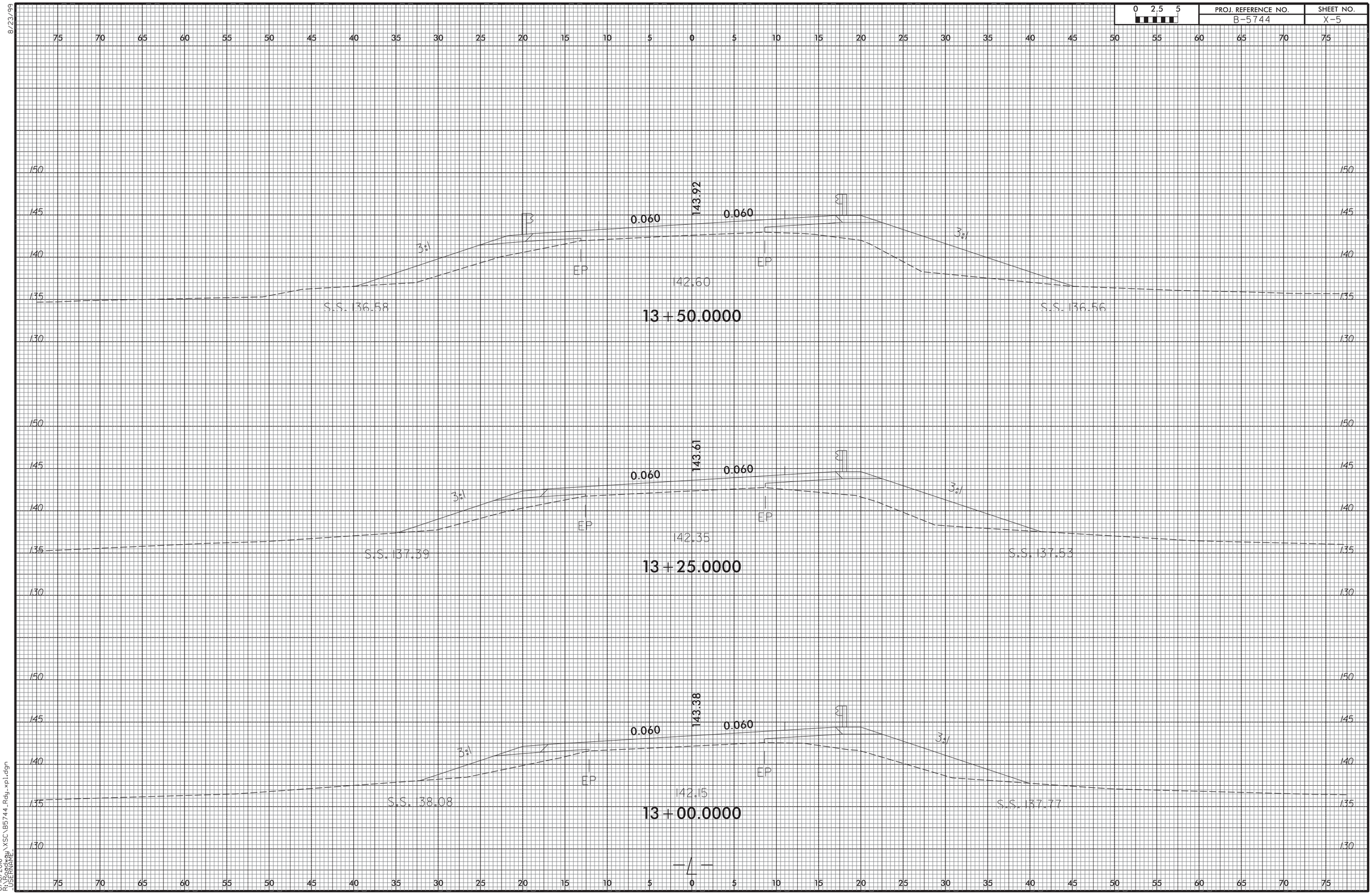
143.92
0.060
0.060
3:1
3:1
EP
EP
142.60
S.S. 136.58
S.S. 136.56
13+50.0000
143.61
0.060
0.060
3:1
3:1
EP
EP
142.35
S.S. 137.39
S.S. 137.53
13+25.0000
143.38
0.060
0.060
3:1
3:1
EP
EP
142.15
S.S. 38.08
S.S. 137.77
13+00.0000
-L-

8/23/99

0 2.5 5	PROJ. REFERENCE NO.	SHEET NO.
	B-5744	X-6

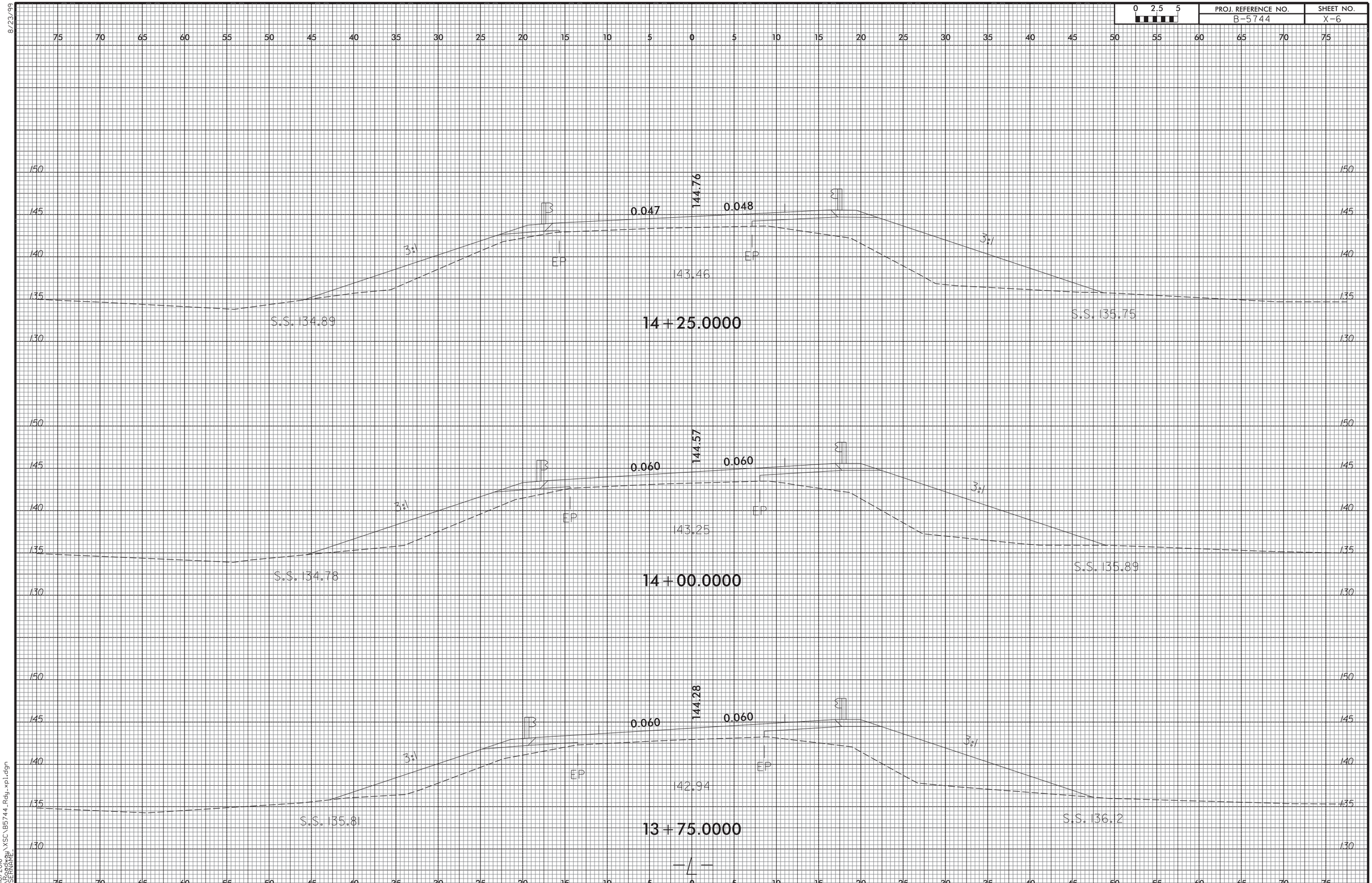

6/16/2016
R:\Roadway\XSC\B5744_Rdy_xpl.dgn
USERNAME=

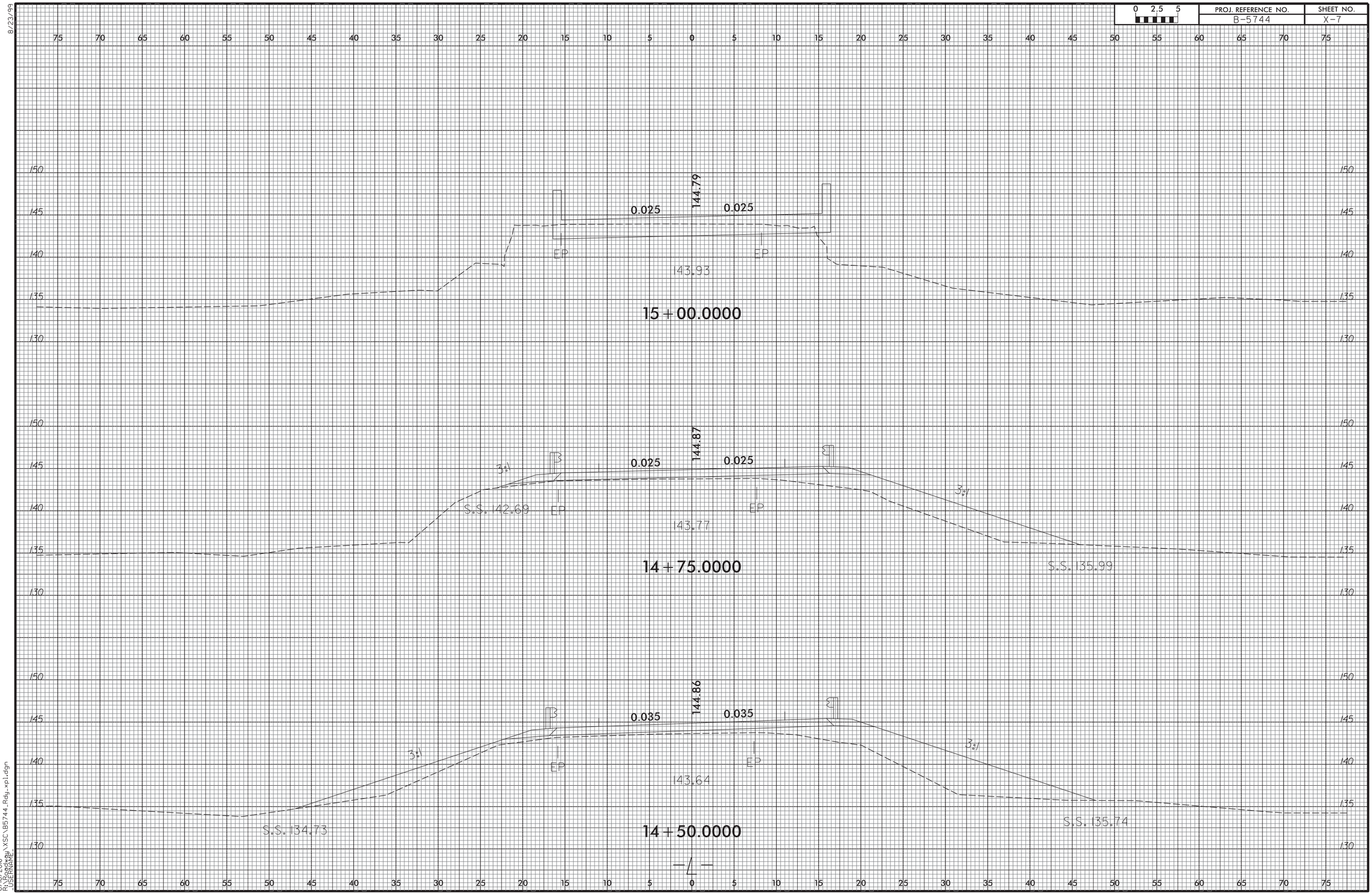

8/23/99
6/16/2016
R:\Roadway\XSC\B5744_Rdy_xpl.dgn
USERNAME=

8/23/99

0 2.5 5	PROJ. REFERENCE NO.	SHEET NO.
	B-5744	X-8

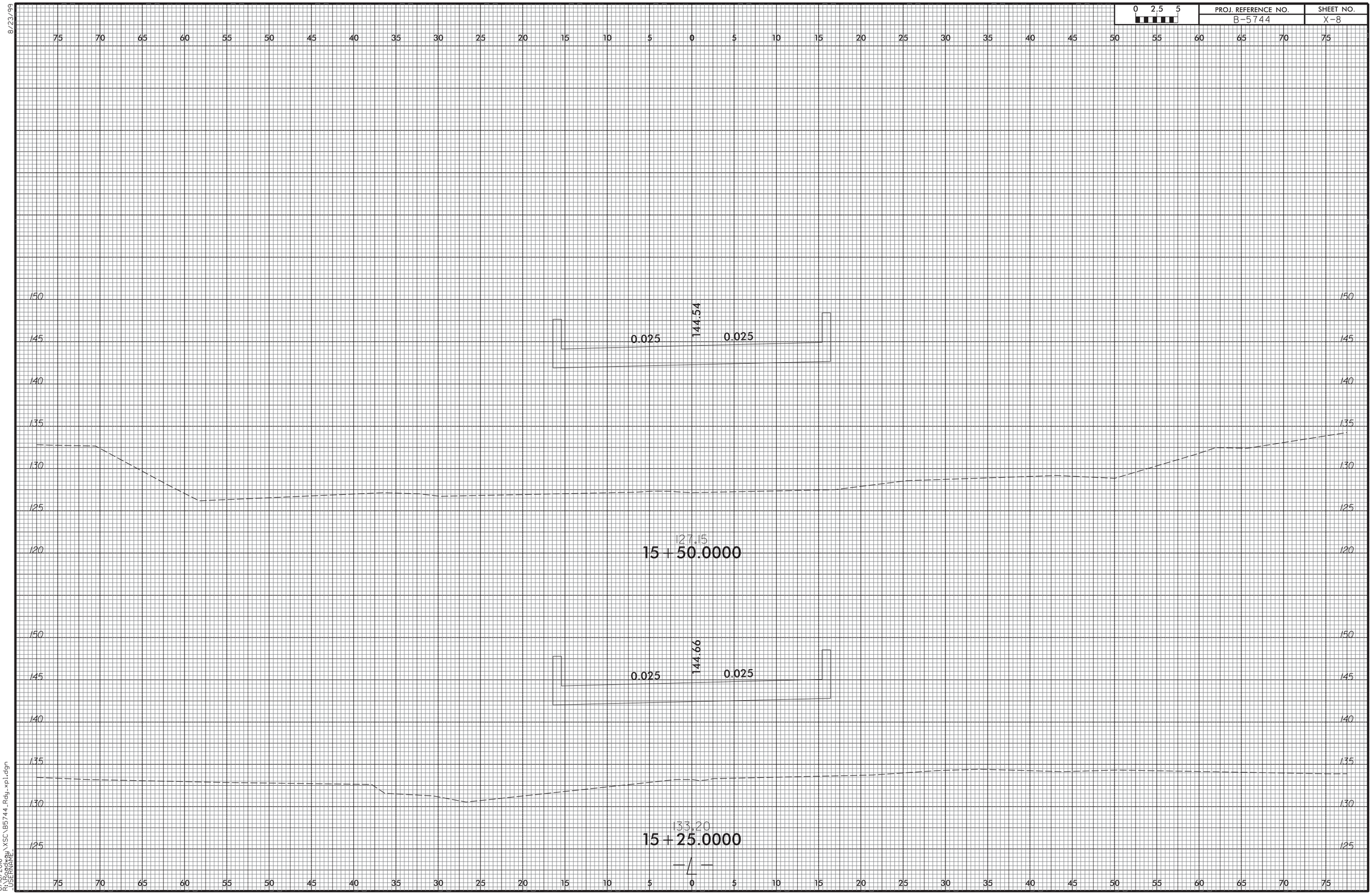

6/16/2016
R:\Roadway\XSC\B5744_Rdy_xpl.dgn
USERNAME=

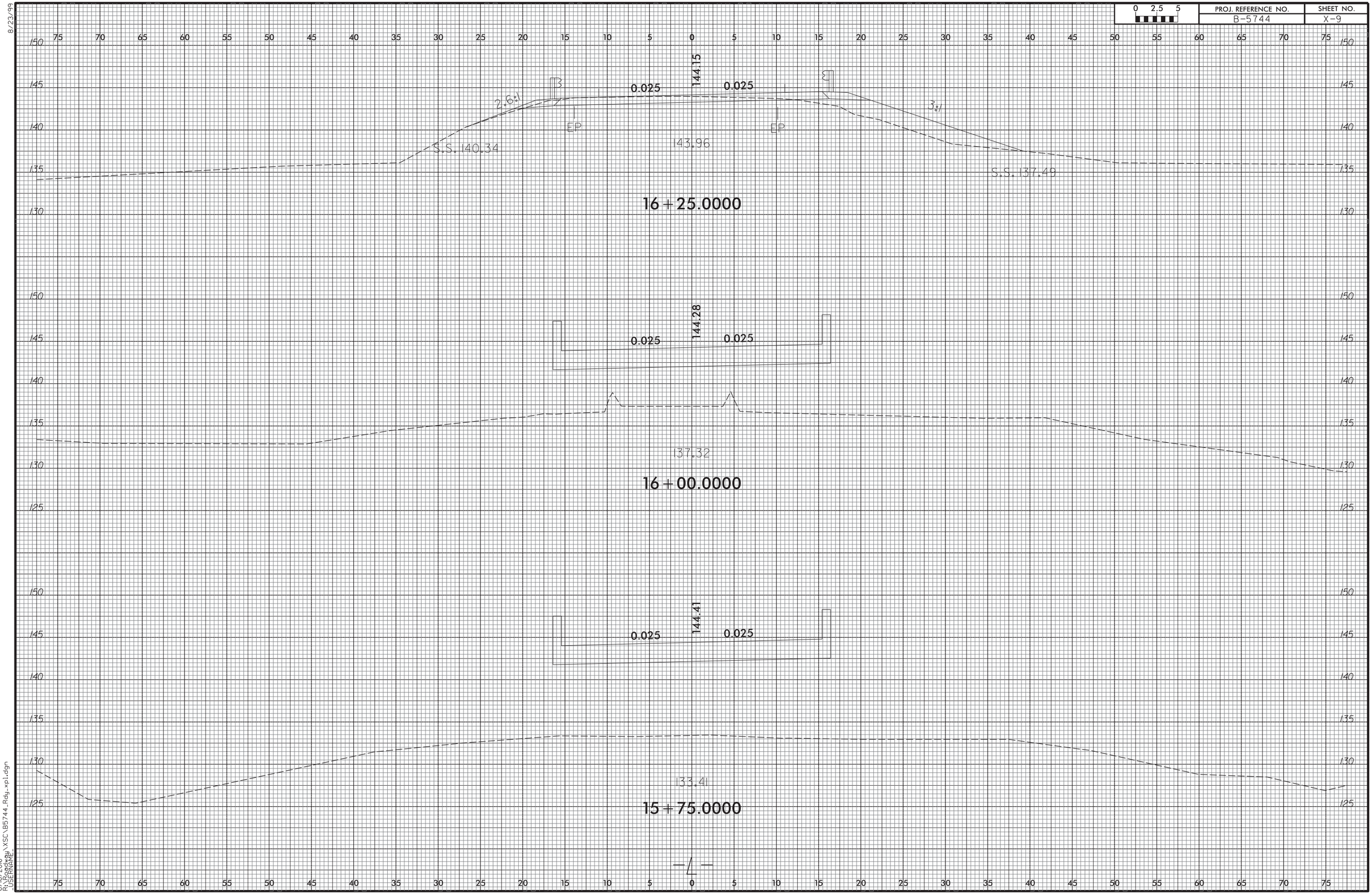

8/23/99
6/16/2016
R:\Roadway\XSC\B5744_Rdy_xpl.dgn
USERNAME=

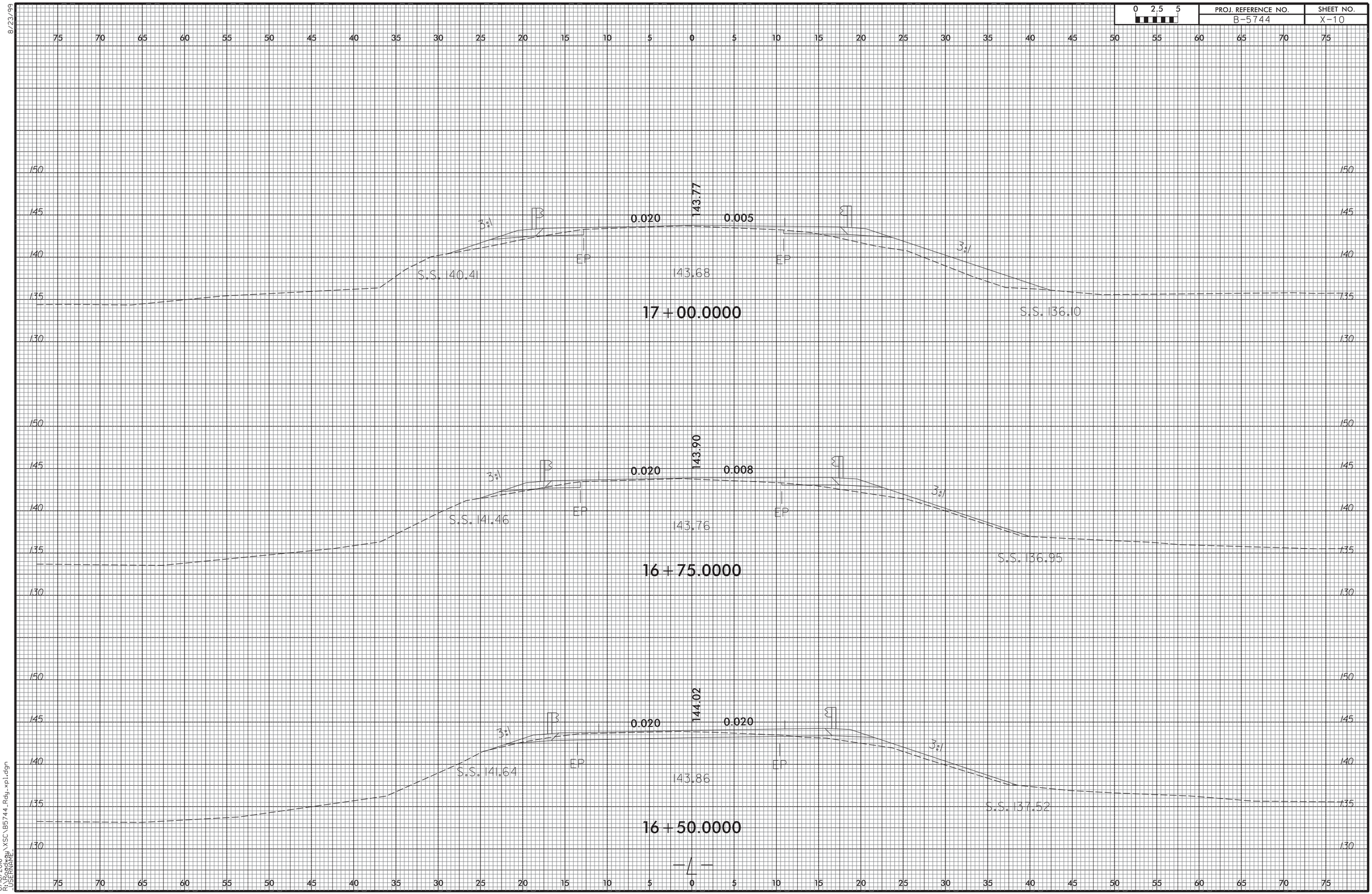

8/23/99
6/16/2016
R:\Roadway\XSC\B5744_Rdy_xpl.dgn
USERNAME=

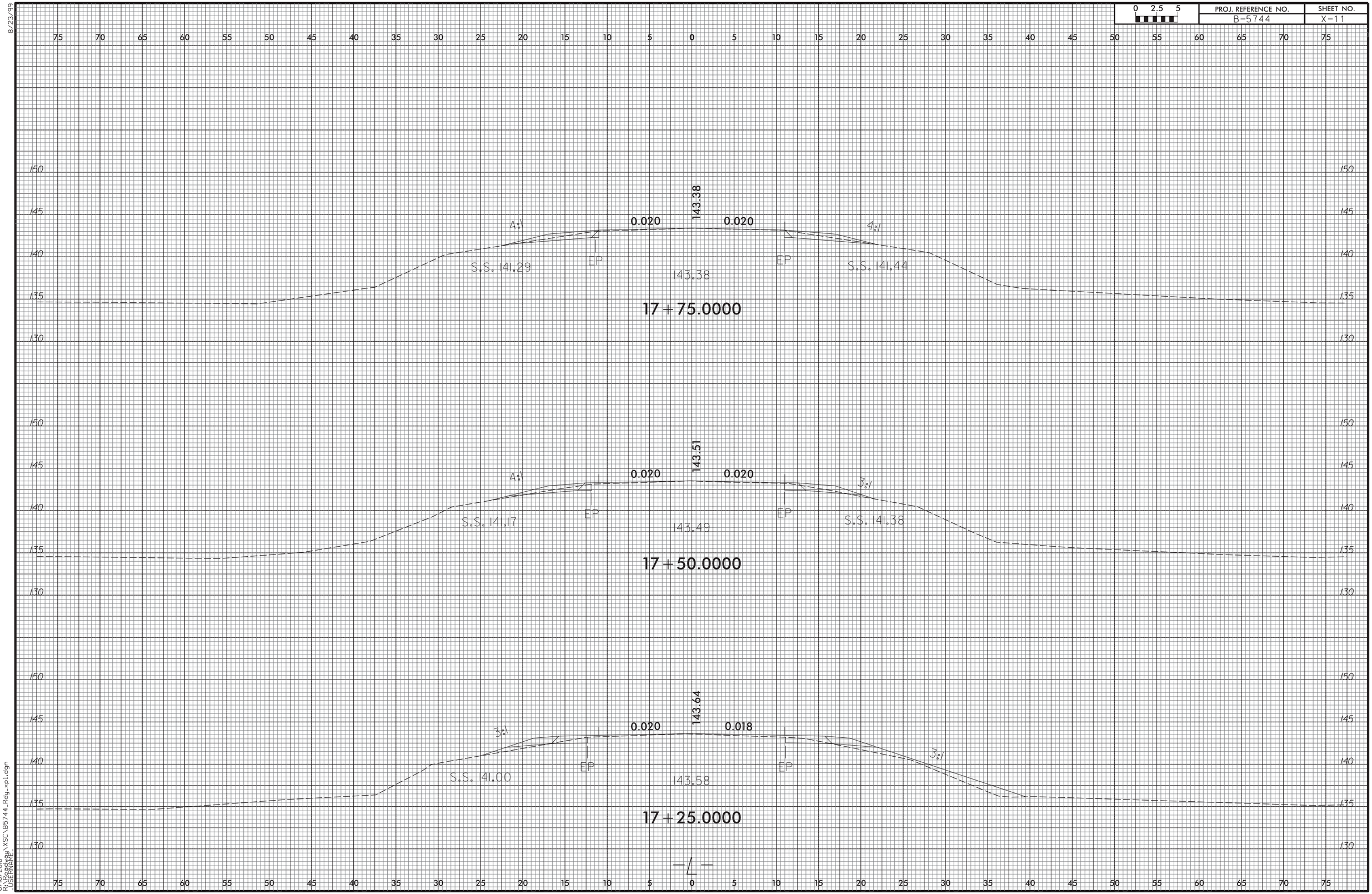
75 70 65 60 55 50 45 40 35 30 25 20 15 10 5 0 5 10 15 20 25 30 35 40 45 50 55 60 65 70 75
150
145
140
135
130
143.38
0.020
0.020
4:1
4:1
EP
EP
S.S. 141.29
143.38
S.S. 141.44
17+75.0000
143.51
0.020
0.020
4:1
3:1
EP
EP
S.S. 141.17
143.49
S.S. 141.38
17+50.0000
143.64
0.020
0.018
3:1
3:1
EP
EP
S.S. 141.00
143.58
17+25.0000
-L-

8/23/99

0 2.5 5	PROJ. REFERENCE NO.	SHEET NO.
	B-5744	X-12

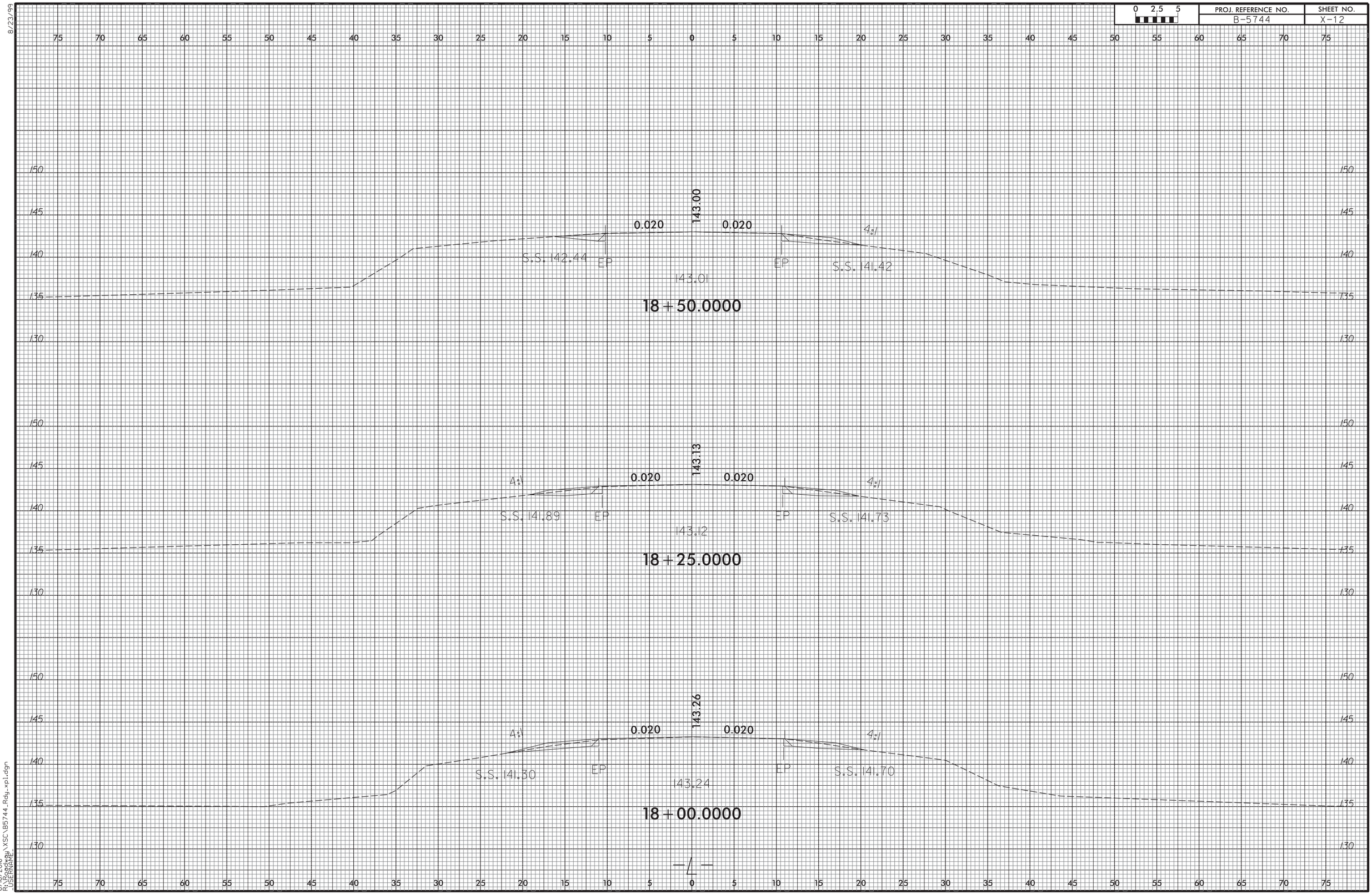

6/16/2016
R:\Roadway\XSC\B5744_Rdy_xpl.dgn
USERNAME=

8/23/99

0 2.5 5	PROJ. REFERENCE NO.	SHEET NO.
	B-5744	X-13

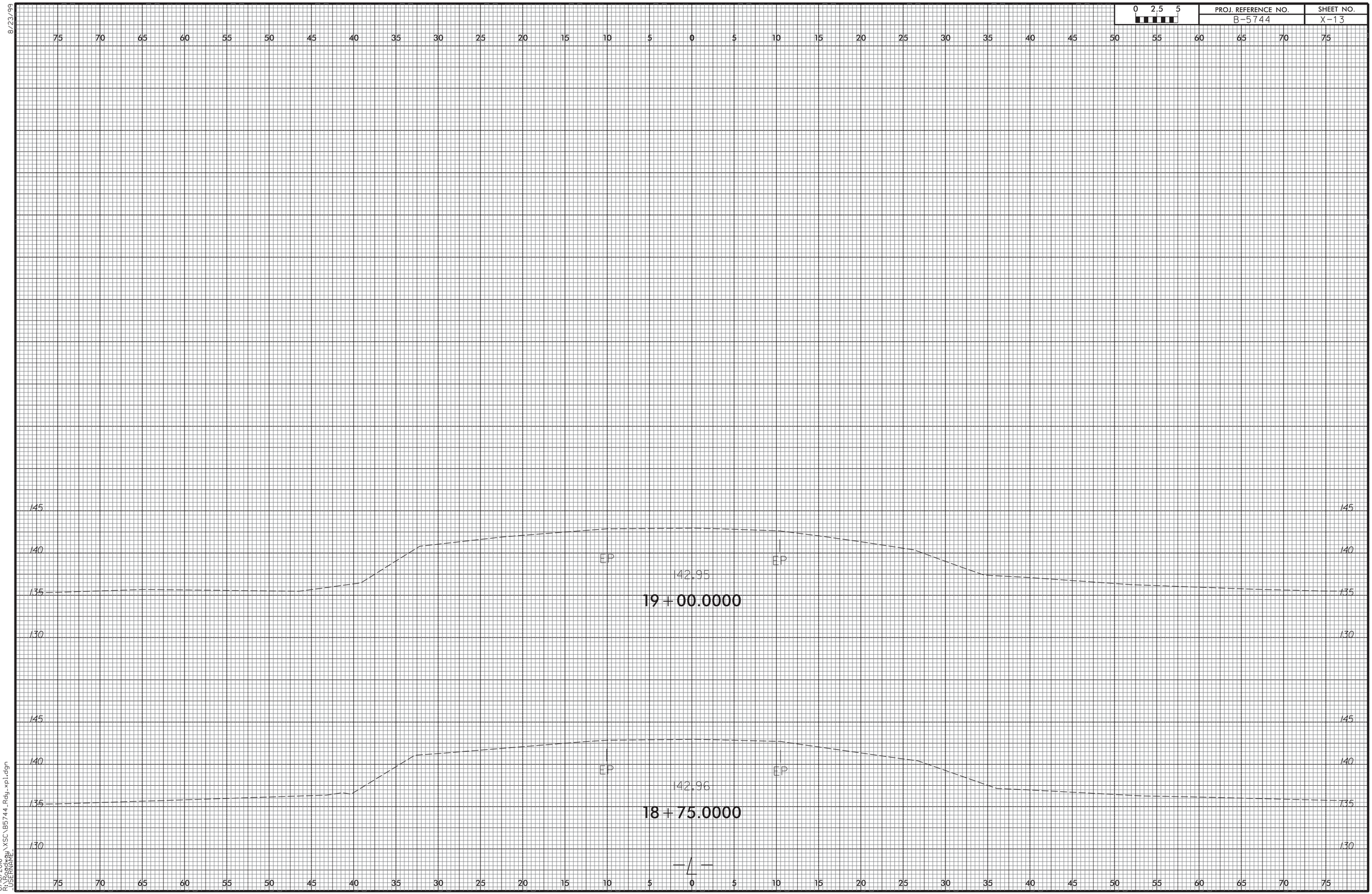

6/16/2016
R:\Roadway\XSC\B5744_Rdy_xpl.dgn
USERNAME=

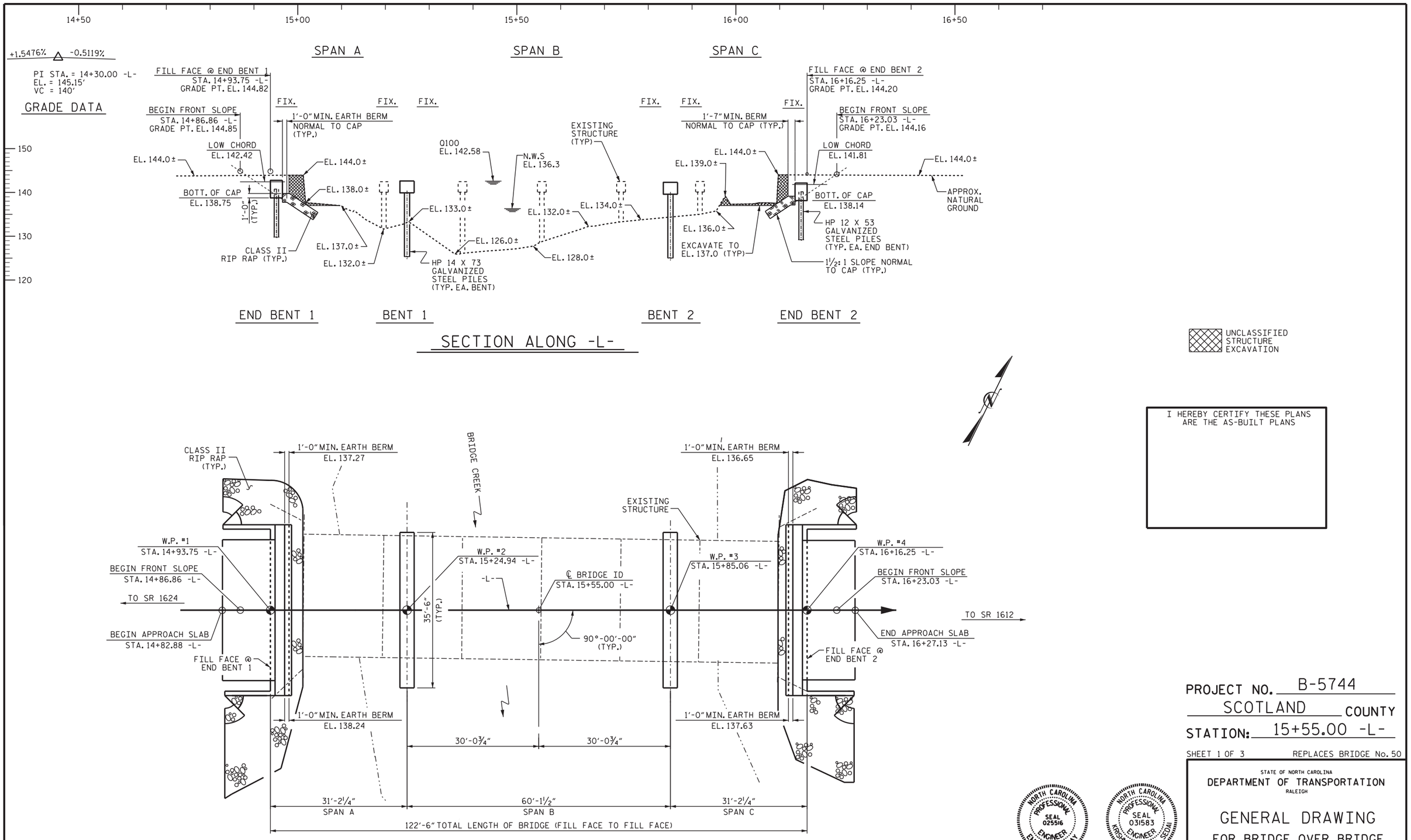

I HEREBY CERTIFY THESE PLANS ARE THE AS-BUILT PLANS

PROJECT NO. B-5744

SCOTLAND COUNTY

STATION: 15+55.00 -L-

SHEET 1 OF 3 REPLACES BRIDGE No. 50

STATE OF NORTH CAROLINA
DEPARTMENT OF TRANSPORTATION
RALEIGH

GENERAL DRAWING

FOR BRIDGE OVER BRIDGE CREEK ON SR 1615 BETWEEN SR 1612 AND SR 1624

NORTH CAROLINA PROFESSIONAL SEAL 025516 ENGINEER EMILY E. MURRAY

Emily E. Murray
8/29/2016

NORTH CAROLINA PROFESSIONAL SEAL 031583 ENGINEER KRISHNA PRASAD SEDAI

Krishna P. Sedai
8/29/2016

DOCUMENT NOT CONSIDERED FINAL UNLESS ALL SIGNATURES COMPLETED

REVISIONS						SHEET NO.
NO.	BY:	DATE:	NO.	BY:	DATE:	S-1
1			3			TOTAL SHEETS
2			4			22

DRAWN BY :	H. B. DESAI	DATE :	5/4/16
CHECKED BY :	D. A. DAVENPORT	DATE :	5/23/16
DESIGN ENGINEER OF RECORD:	K. P. SEDAI	DATE :	8/15/16

29-AUG-2016 13:28
R:\Structures\Plans\B5744_SMU_GD.dgn
ksedai

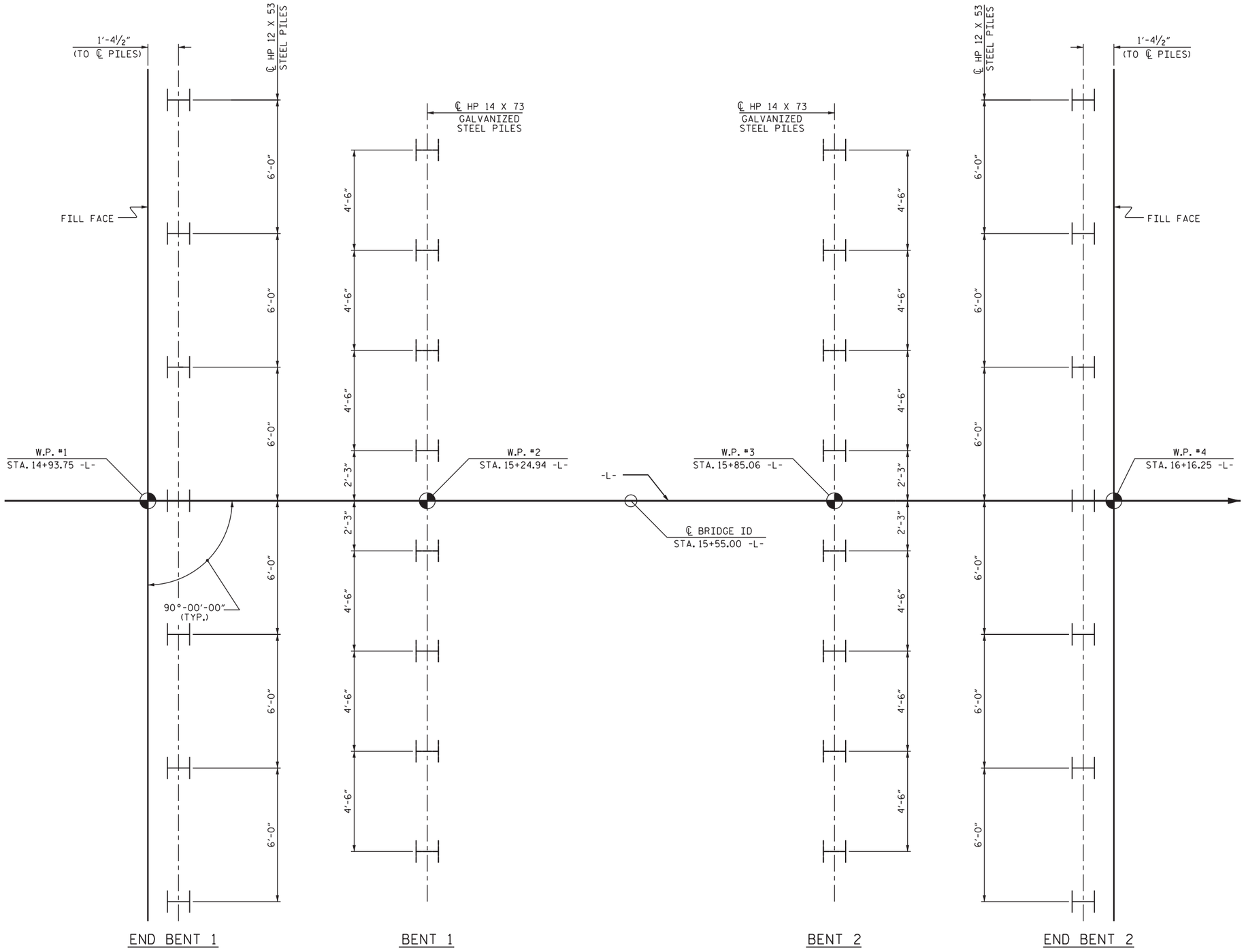

FOUNDATION LAYOUT

DIMENSIONS LOCATING PILES ARE SHOWN TO PILE CENTERLINE.

NOTES

FOR PILES, SEE GEOTECHNICAL SPECIAL PROVISIONS AND SECTION 450 OF THE STANDARD SPECIFICATIONS.

PILES AT END BENT 1 AND END BENT 2 ARE DESIGNED FOR A FACTORED RESISTANCE OF 55 TONS PER PILE.

PILES AT BENT 1 AND BENT 2 ARE DESIGNED FOR A FACTORED RESISTANCE OF 95 TONS PER PILE.

DRIVE PILES AT END BENT 1 AND END BENT 2 TO A REQUIRED DRIVING RESISTANCE OF 95 TONS PER PILE.

DRIVE PILES AT BENT 1 TO A REQUIRED DRIVING RESISTANCE OF 160 TONS PER PILE. THIS REQUIRED DRIVING RESISTANCE INCLUDES ADDITIONAL RESISTANCE FOR SCOUR.

DRIVE PILES AT BENT 2 TO A REQUIRED DRIVING RESISTANCE OF 165 TONS PER PILE. THIS REQUIRED DRIVING RESISTANCE INCLUDES ADDITIONAL RESISTANCE FOR SCOUR.

INSTALL PILES AT BENT 1 TO A TIP ELEVATION NO HIGHER THAN 90 FEET.

INSTALL PILES AT BENT 2 TO A TIP ELEVATION NO HIGHER THAN 103 FEET.

THE SCOUR CRITICAL ELEVATION FOR BENT 1 IS ELEVATION 114 FEET. SCOUR CRITICAL ELEVATIONS ARE USED TO MONITOR POSSIBLE SCOUR PROBLEMS DURING THE LIFE OF THE STRUCTURE.

THE SCOUR CRITICAL ELEVATION FOR BENT 2 IS ELEVATION 127 FEET. SCOUR CRITICAL ELEVATIONS ARE USED TO MONITOR POSSIBLE SCOUR PROBLEMS DURING THE LIFE OF THE STRUCTURE.

IT HAS BEEN ESTIMATED THAT A HAMMER WITH AN EQUIVALENT RATED ENERGY IN THE RANGE OF 10,000 TO 20,000 FT.-LBS PER BLOW WILL BE REQUIRED TO DRIVE PILES AT END BENT 1 AND END BENT 2. THIS ESTIMATED ENERGY RANGE DOES NOT RELEASE THE CONTRACTOR FROM PROVIDING EQUIPMENT IN ACCORDANCE WITH SUBARTICLE 450-3(D)(2) OF THE STANDARD SPECIFICATIONS.

IT HAS BEEN ESTIMATED THAT A HAMMER WITH AN EQUIVALENT RATED ENERGY IN THE RANGE OF 10,000 TO 30,000 FT.-LBS PER BLOW WILL BE REQUIRED TO DRIVE PILES AT BENT 1 AND BENT 2. THIS ESTIMATED ENERGY RANGE DOES NOT RELEASE THE CONTRACTOR FROM PROVIDING EQUIPMENT IN ACCORDANCE WITH SUBARTICLE 450-3(D)(2) OF THE STANDARD SPECIFICATIONS.

TESTING THE FIRST PRODUCTION PILE WITH THE PDA DURING DRIVING, RESTRIKING OR REDRIVING MAY BE REQUIRED AT EACH BENT. FOR PDA TESTING, SEE SECTION 450 OF THE STANDARD SPECIFICAITONS.

PROJECT NO. B-5744
SCOTLAND COUNTY
STATION: 15+55.00 -L-

SHEET 2 OF 3

STATE OF NORTH CAROLINA
DEPARTMENT OF TRANSPORTATION
RALEIGH

GENERAL DRAWING
FOR BRIDGE OVER BRIDGE
CREEK ON SR 1615 BETWEEN
SR 1612 AND SR 1624

NORTH CAROLINA PROFESSIONAL SEAL 031583 ENGINEER KRISHNA PRASAD SEDAI

DocuSigned by:
Krishna P. Sedai
A61C9A7E3E4B4F...
8/25/2016

DOCUMENT NOT CONSIDERED FINAL UNLESS ALL SIGNATURES COMPLETED

REVISIONS						SHEET NO.
NO.	BY:	DATE:	NO.	BY:	DATE:	S-2
1			3			TOTAL SHEETS
2			4			22

DRAWN BY : H. B. DESAI DATE : 5/4/16
CHECKED BY : D. A. DAVENPORT DATE : 5/23/16
DESIGN ENGINEER OF RECORD: K. P. SEDAI DATE : 8/15/16

17-AUG-2016 14:00
R:\Structures\Plans\B5744_SMU_GD.dgn
jdhawk

BM #1: RR SPIKE IN 16" Ø POPLAR, 84.3' LEFT OF STA. 10+20.01 -L-, EL. 143.92'

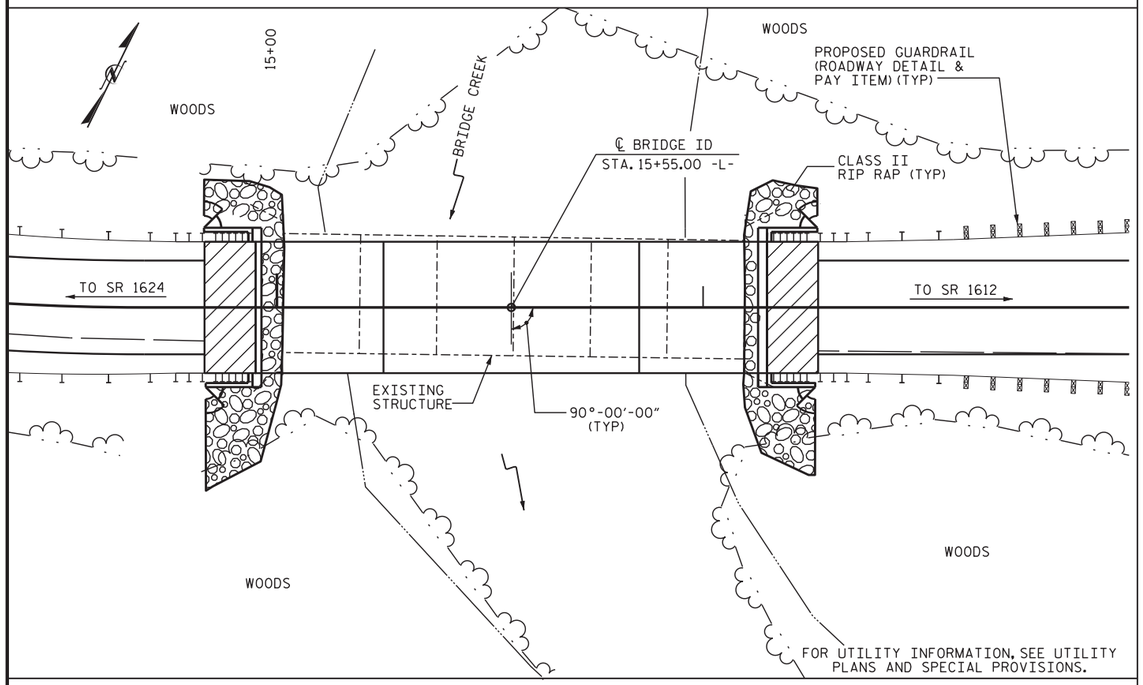

LOCATION SKETCH

HYDRAULIC DATA

DESIGN DISCHARGE	= 2,700 CFS
FREQUENCY OF DESIGN DISCHARGE	= 25 YR.
DESIGN HIGH WATER ELEVATION	= 141.50
DRAINAGE AREA	= 51.8 SQ.MI.
BASE DISCHARGE (Q100)	= 4,000 CFS
BASE HIGH WATER ELEVATION	= 142.58

OVERTOPPING DATA

OVERTOPPING DISCHARGE	= 4,825 CFS
FREQUENCY OF OVERTOPPING	= 100+ YR.
OVERTOPPING ELEVATION	= 142.90

NOTES

ASSUMED LIVE LOAD = HL 93 OR ALTERNATE LOADING.

THIS BRIDGE HAS BEEN DESIGNED IN ACCORDANCE WITH THE AASHTO LRFD BRIDGE DESIGN SPECIFICATIONS.

THIS BRIDGE IS LOCATED IN SEISMIC ZONE 2.

FOR OTHER DESIGN DATA AND GENERAL NOTES, SEE SHEET SN.

FOR SUBMITTAL OF WORKING DRAWINGS, SEE SPECIAL PROVISIONS.

FOR FALSEWORK & FORMWORK, SEE SPECIAL PROVISIONS.

FOR CRANE SAFETY, SEE SPECIAL PROVISIONS.

FOR GROUT FOR STRUCTURES, SEE SPECIAL PROVISIONS.

INASMUCH AS THE PAINT SYSTEM ON THE EXISTING STRUCTURAL STEEL CONTAINS LEAD, THE CONTRACTOR'S ATTENTION IS DIRECTED TO ARTICLE 107-1 OF THE STANDARD SPECIFICATIONS. ANY COSTS RESULTING FROM COMPLIANCE WITH APPLICABLE STATE OR FEDERAL REGULATIONS PERTAINING TO HANDLING OF MATERIALS CONTAINING LEAD BASED PAINT SHALL BE INCLUDED IN THE BID PRICE FOR "REMOVAL OF EXISTING STRUCTURE AT STATION 15+55.00 -L-".

THE MATERIAL SHOWN IN THE CROSS-HATCHED AREA ON SHEET S-1 SHALL BE EXCAVATED FOR A DISTANCE OF 20 FT. EACH SIDE OF CENTERLINE ROADWAY AS DIRECTED BY THE ENGINEER. THIS WORK WILL BE PAID FOR AT THE CONTRACT LUMP SUM PRICE FOR UNCLASSIFIED STRUCTURE EXCAVATION.

THE EXISTING STRUCTURE CONSISTING OF 1 SPAN @ 18'-5", 1 SPAN @ 18'-2", 3 SPANS @ 18'-0" AND 1 SPAN 18'-5" WITH A STEEL PLANK DECK AND AN 2" ASPHALT WEARING SURFACE ON STEEL I-BEAMS ON TIMBER CAPS AND PILES, TIMBER BULKHEADS AT END BENTS AND INTERIOR BENTS AND STEEL CRUTCH @ BENT 2 WITH A CLEAR ROADWAY WIDTH OF 27'-9" LOCATED AT THE PROPOSED STRUCTURE, SHALL BE REMOVED. THE EXISTING BRIDGE IS PRESENTLY NOT POSTED FOR THE LEGAL LOAD LIMIT. SHOULD THE STRUCTURAL INTEGRITY OF THE BRIDGE FURTHER DETERIORATE, THIS LOAD LIMITATION MAY BE REDUCED AS FOUND NECESSARY DURING THE LIFE OF THE PROJECT. FOR REMOVAL OF EXISTING STRUCTURE, SEE SPECIAL PROVISIONS.

REMOVAL OF EXISTING STRUCTURE SHALL INCLUDE REMOVAL OF ANY REMNANTS OF PRIOR STRUCTURES.

THE SUBSTRUCTURE OF THE EXISTING BRIDGE INDICATED ON THE PLANS IS FROM THE BEST INFORMATION AVAILABLE. SINCE THIS INFORMATION IS SHOWN FOR THE CONVENIENCE OF THE CONTRACTOR, THE CONTRACTOR SHALL HAVE NO CLAIM WHATSOEVER AGAINST THE DEPARTMENT OF TRANSPORTATION FOR ANY DELAYS OR ADDITIONAL COST INCURRED BASED ON DIFFERENCES BETWEEN THE EXISTING BRIDGE SUBSTRUCTURE SHOWN ON THE PLANS AND THE ACTUAL CONDITIONS AT THE PROJECT SITE.

REMOVAL OF THE EXISTING BRIDGE SHALL BE PERFORMED SO AS NOT TO ALLOW DEBRIS TO FALL INTO THE WATER. THE CONTRACTOR SHALL REMOVE THE BRIDGE AND SUBMIT PLANS FOR DEMOLITION IN ACCORDANCE WITH ARTICLE 402-2 OF THE STANDARD SPECIFICATIONS.

THIS STRUCTURE HAS BEEN DESIGNED IN ACCORDANCE WITH HEC 18, "EVALUATING SCOUR AT BRIDGES", MAY, 2001.

FOR EROSION CONTROL MEASURES, SEE EROSION CONTROL PLANS.

ASPHALT WEARING SURFACE IS INCLUDED IN ROADWAY QUANTITY ON ROADWAY PLANS.

FOR INTERIOR BENTS 1 AND 2, ONLY PARTIAL GALVANIZING OF THE PILES IS REQUIRED. SEE INTERIOR BENT SHEETS FOR REQUIRED GALVANIZED LENGTHS. PAYMENT FOR PARTIALLY GALVANIZED PILES WILL BE MADE UNDER THE CONTRACT UNIT PRICE FOR GALVANIZED STEEL PILES.

FOR ASBESTOS ASSESSMENT FOR BRIDGE DEMOLITION AND RENOVATION ACTIVITIES, SEE SPECIAL PROVISIONS.

AT THE CONTRACTOR'S OPTION, PRESTRESSED CONCRETE END BENT AND BENT CAPS MAY BE SUBSTITUTED IN PLACE OF THE CAST-IN-PLACE CAPS. THE CONTRACTOR SHALL COORDINATE WITH THE RESIDENT ENGINEER TO RECEIVE REVISED PLANS AND DETAILS FROM THE STRUCTURE MANAGEMENT UNIT. THE REDESIGN AND ANY ADDITIONAL MATERIALS NEEDED WILL BE AT NO ADDITIONAL COST TO THE CONTRACTOR.

TOTAL BILL OF MATERIAL

	REMOVAL OF EXISTING STRUCTURE	PDA TESTING	UNCLASSIFIED STRUCTURE EXCAVATION	CLASS A CONCRETE	BRIDGE APPROACH SLABS	REINFORCING STEEL	HP 12X53 STEEL PILES		HP 14X73 GALVANIZED STEEL PILES		PILE REDRIVES	VERTICAL CONCRETE BARRIER RAIL	RIP RAP CLASS II (2'-0" THICK)	GEOTEXTILE FOR DRAINAGE	ELASTOMERIC BEARINGS	3'-0" X 1'-9" PRESTRESSED CONCRETE CORRED SLABS		3'-0" X 2'-0" PRESTRESSED CONCRETE CORRED SLABS		ASBESTOS ASSESSMENT
	LUMP SUM	EACH	LUMP SUM	CU. YDS.	LUMP SUM	LBS.	NO.	LIN.FT.	NO.	LIN.FT.	EA.	LIN.FT.	TONS	SQ. YDS.	LUMP SUM	NO.	LIN.FT.	NO.	LIN.FT.	LUMP SUM
SUPERSTRUCTURE												240.50				22	660.00	11	660.00	
END BENT NO. 1				21.6		2,636	7	350			7		135	150						
BENT NO. 1				11.3		2,283			8	520	8									
BENT NO. 2				11.3		2,283			8	480	8									
END BENT NO. 2				21.6		2,636	7	315			7		120	135						
TOTAL	LUMP SUM	4	LUMP SUM	65.8	LUMP SUM	9,838	14	665	16	1,000	30	240.50	255	285	LUMP SUM	22	660.00	11	660.00	LUMP SUM

PROJECT NO. B-5744
SCOTLAND COUNTY
STATION: 15+55.00 -L-

SHEET 3 OF 3

NORTH CAROLINA PROFESSIONAL SEAL 031583 ENGINEER KRISHNA PRASAD SEDAI

Krishna P. Sedai
8/29/2016

STATE OF NORTH CAROLINA
DEPARTMENT OF TRANSPORTATION
RALEIGH

GENERAL DRAWING
FOR BRIDGE OVER BRIDGE CREEK ON SR 1615 BETWEEN SR 1612 AND SR 1624

DOCUMENT NOT CONSIDERED FINAL UNLESS ALL SIGNATURES COMPLETED

REVISIONS						SHEET NO.
NO.	BY:	DATE:	NO.	BY:	DATE:	S-3
1			3			TOTAL SHEETS
2			4			22

DRAWN BY : H. B. DESAI DATE : 5/4/16
CHECKED BY : D. A. DAVENPORT DATE : 5/23/16
DESIGN ENGINEER OF RECORD: K. P. SEDAI DATE : 8/16/16

29-AUG-2016 13:26
R:\Structures\Plans\B5744_SMU_GD.dgn
ksedai

LOAD AND RESISTANCE FACTOR RATING (LRFD) SUMMARY FOR PRESTRESSED CONCRETE GIRDERS

LEVEL		VEHICLE	WEIGHT (W) (TONS)	CONTROLLING LOAD RATING	MINIMUM RATING FACTORS (RF)	TONS = W X RF	STRENGTH I LIMIT STATE											SERVICE III LIMIT STATE						COMMENT NUMBER
							LIVELOAD FACTORS	MOMENT					SHEAR					LIVELOAD FACTORS	MOMENT					
								DISTRIBUTION FACTORS (DF)	RATING FACTOR	SPAN	GIRDER LOCATION	DISTANCE FROM LEFT END OF SPAN (ft)	DISTRIBUTION FACTORS (DF)	RATING FACTOR	SPAN	GIRDER LOCATION	DISTANCE FROM LEFT END OF SPAN (ft)		DISTRIBUTION FACTORS (DF)	RATING FACTOR	SPAN	GIRDER LOCATION	DISTANCE FROM LEFT END OF SPAN (ft)	
DESIGN LOAD RATING		HL-93(Inv)	N/A	1	1.037	--	1.75	0.283	1.83	30'	EL	14.5	0.574	**1.04**	30'	EL	**1.45**	0.80	0.283	1.58	30'	EL	14.5	
		HL-93(Opr)	N/A	--	1.344	--	1.35	0.283	2.38	30'	EL	14.5	0.574	1.34	30'	EL	1.45	N/A	--	--	--	--	--	
		HS-20(Inv)	36.000	2	1.183	42.587	1.75	0.283	2.53	30'	EL	11.6	0.574	**1.18**	30'	EL	**1.45**	0.80	0.283	2.20	30'	EL	11.6	
		HS-20(Opr)	36.000	--	1.533	55.205	1.35	0.283	3.28	30'	EL	11.6	0.574	1.53	30'	EL	1.45	N/A	--	--	--	--	--	
LEGAL LOAD RATING	SV	SNSH	13.500	--	2.895	39.081	1.40	0.283	5.18	30'	EL	14.5	0.574	2.89	30'	EL	1.45	0.80	0.283	3.56	30'	EL	14.5	
		SNGARBS2	20.000	--	2.240	44.792	1.40	0.283	4.53	30'	EL	11.6	0.574	2.24	30'	EL	1.45	0.80	0.283	3.15	30'	EL	11.6	
		SNAGRIS2	22.000	--	2.157	47.463	1.40	0.283	4.6	30'	EL	11.6	0.574	2.16	30'	EL	1.45	0.80	0.283	3.20	30'	EL	11.6	
		SNCOTTS3	27.250	--	1.462	39.849	1.40	0.283	2.6	30'	EL	14.5	0.574	1.46	30'	EL	1.45	0.80	0.283	1.79	30'	EL	14.5	
		SNAGGRS4	34.925	--	1.346	46.999	1.40	0.283	2.5	30'	EL	14.5	0.574	1.35	30'	EL	1.45	0.80	0.283	1.72	30'	EL	14.5	
		SNS5A	35.550	--	1.427	50.733	1.40	0.283	2.42	30'	EL	14.5	0.574	1.43	30'	EL	1.45	0.80	0.283	1.67	30'	EL	14.5	
		SNS6A	39.950	--	1.341	53.590	1.40	0.283	2.29	30'	EL	14.5	0.574	1.34	30'	EL	1.45	0.80	0.283	1.58	30'	EL	14.5	
		SNS7B	42.000	--	1.369	57.505	1.40	0.283	2.23	30'	EL	14.5	0.574	1.37	30'	EL	1.45	0.80	0.283	1.53	30'	EL	14.5	
	TTST	TNAGRIT3	33.000	--	1.593	52.580	1.40	0.283	2.97	30'	EL	14.5	0.574	1.59	30'	EL	1.45	0.80	0.283	2.04	30'	EL	14.5	
		TNT4A	33.075	--	1.483	49.043	1.40	0.283	2.82	30'	EL	14.5	0.574	1.48	30'	EL	1.45	0.80	0.283	1.94	30'	EL	14.5	
		TNT6A	41.600	--	1.433	59.622	1.40	0.283	2.56	30'	EL	14.5	0.574	1.43	30'	EL	1.45	0.80	0.283	1.76	30'	EL	14.5	
		TNT7A	42.000	--	1.363	57.264	1.40	0.283	2.64	30'	EL	14.5	0.574	1.36	30'	EL	1.45	0.80	0.283	1.82	30'	EL	14.5	
		TNT7B	42.000	--	1.331	55.915	1.40	0.283	2.49	30'	EL	14.5	0.574	1.33	30'	EL	1.45	0.80	0.283	1.72	30'	EL	14.5	
		TNAGRIT4	43.000	--	1.287	55.356	1.40	0.283	2.58	30'	EL	14.5	0.574	1.29	30'	EL	1.45	0.80	0.283	1.78	30'	EL	14.5	
		TNAGT5A	45.000	--	1.381	62.151	1.40	0.283	2.5	30'	EL	14.5	0.574	1.38	30'	EL	1.45	0.80	0.283	1.72	30'	EL	14.5	
		TNAGT5B	45.000	3	1.212	54.540	1.40	0.283	2.41	30'	EL	11.6	0.574	**1.21**	30'	EL	**1.45**	0.80	0.283	1.66	30'	EL	11.6	

LOAD FACTORS:

DESIGN LOAD RATING FACTORS	LIMIT STATE	γ_{DC}	γ_{DW}
	STRENGTH I	1.25	1.50
	SERVICE III	1.00	1.00

NOTES:

MINIMUM RATING FACTORS ARE BASED ON THE STRENGTH I AND SERVICE III LIMIT STATES.

ALLOWABLE STRESSES FOR SERVICE III LIMIT STATE ARE AS REQUIRED FOR DESIGN.

COMMENTS:

1.
2.
3.
4.

 # CONTROLLING LOAD RATING

1 DESIGN LOAD RATING (HL-93)
2 DESIGN LOAD RATING (HS-20)
3 LEGAL LOAD RATING **
** SEE CHART FOR VEHICLE TYPE

GIRDER LOCATION

I - INTERIOR GIRDER
EL - EXTERIOR LEFT GIRDER
ER - EXTERIOR RIGHT GIRDER

LRFR SUMMARY

FOR SPANS 'A' & 'C'

PROJECT NO. B-5744
SCOTLAND COUNTY
STATION: 15+55.00 -L-

SHEET 1 OF 2

NORTH CAROLINA PROFESSIONAL SEAL 031583 ENGINEER KRISHNA PRASAD DESAI

Docusigned by: Krishna P. Desai
Aug 29, 2016

STATE OF NORTH CAROLINA
DEPARTMENT OF TRANSPORTATION
RALEIGH

STANDARD
LRFR SUMMARY FOR 30' CORED SLAB UNIT 90° SKEW
(NON-INTERSTATE TRAFFIC)

REVISIONS						SHEET NO.
NO.	BY:	DATE:	NO.	BY:	DATE:	S-4
1			3			TOTAL SHEETS
2			4			22

DOCUMENT NOT CONSIDERED FINAL UNLESS ALL SIGNATURES COMPLETED

ASSEMBLED BY : D.A. DAVENPORT DATE : 5/13/16
CHECKED BY : H. B. DESAI DATE : 8/3/16
DRAWN BY : CVC 6/10
CHECKED BY : DNS 6/10

17-AUG-2016 14:00
R:\Structures\Plans\B5744_SMU_LR.dgn
jdhawk

STD. NO. 21LRFR1_90S_30L

LOAD AND RESISTANCE FACTOR RATING (LRFD) SUMMARY FOR PRESTRESSED CONCRETE GIRDERS

LEVEL		VEHICLE	WEIGHT (W) (TONS)	CONTROLLING LOAD RATING	MINIMUM RATING FACTORS (RF)	TONS = W X RF	STRENGTH I LIMIT STATE											SERVICE III LIMIT STATE						COMMENT NUMBER
								MOMENT					SHEAR						MOMENT					
							LIVELOAD FACTORS	DISTRIBUTION FACTORS (DF)	RATING FACTOR	SPAN	GIRDER LOCATION	DISTANCE FROM LEFT END OF SPAN (ft)	DISTRIBUTION FACTORS (DF)	RATING FACTOR	SPAN	GIRDER LOCATION	DISTANCE FROM LEFT END OF SPAN (ft)	LIVELOAD FACTORS	DISTRIBUTION FACTORS (DF)	RATING FACTOR	SPAN	GIRDER LOCATION	DISTANCE FROM LEFT END OF SPAN (ft)	
DESIGN LOAD RATING		HL-93(Inv)	N/A	(1)	1.33	--	1.75	0.275	1.33	60'	EL	29.5	0.52	**1.33**	60'	EL	**5.9**	0.80	0.275	1.37	60'	EL	29.5	
		HL-93(Opr)	N/A	--	1.725	--	1.35	0.275	1.73	60'	EL	29.5	0.52	1.72	60'	EL	5.9	N/A	--	--	--	--	--	
		HS-20(Inv)	36.000	(2)	1.601	57.643	1.75	0.275	1.69	60'	EL	29.5	0.52	**1.6**	60'	EL	**5.9**	0.80	0.275	1.74	60'	EL	29.5	
		HS-20(Opr)	36.000	--	2.076	74.723	1.35	0.275	2.19	60'	EL	29.5	0.52	2.08	60'	EL	5.9	N/A	--	--	--	--	--	
LEGAL LOAD RATING	SV	SNSH	13.500	--	3.745	50.557	1.40	0.275	4.55	60'	EL	29.5	0.52	4.63	60'	EL	5.9	0.80	0.275	3.74	60'	EL	29.5	
		SNGARBS2	20.000	--	2.867	57.338	1.40	0.275	3.48	60'	EL	29.5	0.52	3.33	60'	EL	5.9	0.80	0.275	2.87	60'	EL	29.5	
		SNAGRIS2	22.000	--	2.748	60.460	1.40	0.275	3.34	60'	EL	29.5	0.52	3.11	60'	EL	5.9	0.80	0.275	2.75	60'	EL	29.5	
		SNCOTTS3	27.250	--	1.866	50.841	1.40	0.275	2.27	60'	EL	29.5	0.52	2.31	60'	EL	5.9	0.80	0.275	1.87	60'	EL	29.5	
		SNAGGRS4	34.925	--	1.588	55.465	1.40	0.275	1.93	60'	EL	29.5	0.52	1.95	60'	EL	5.9	0.80	0.275	1.59	60'	EL	29.5	
		SNS5A	35.550	--	1.551	55.139	1.40	0.275	1.89	60'	EL	29.5	0.52	1.99	60'	EL	5.9	0.80	0.275	1.55	60'	EL	29.5	
		SNS6A	39.950	--	1.435	57.347	1.40	0.275	1.74	60'	EL	29.5	0.52	1.83	60'	EL	5.9	0.80	0.275	1.44	60'	EL	29.5	
		SNS7B	42.000	--	1.367	57.434	1.40	0.275	1.66	60'	EL	29.5	0.52	1.81	60'	EL	5.9	0.80	0.275	1.37	60'	EL	29.5	
	TTST	TNAGRIT3	33.000	--	1.754	57.887	1.40	0.275	2.13	60'	EL	29.5	0.52	2.17	60'	EL	5.9	0.80	0.275	1.75	60'	EL	29.5	
		TNT4A	33.075	--	1.765	58.389	1.40	0.275	2.15	60'	EL	29.5	0.52	2.1	60'	EL	5.9	0.80	0.275	1.77	60'	EL	29.5	
		TNT6A	41.600	--	1.456	60.551	1.40	0.275	1.77	60'	EL	29.5	0.52	1.96	60'	EL	5.9	0.80	0.275	1.46	60'	EL	29.5	
		TNT7A	42.000	--	1.469	61.714	1.40	0.275	1.79	60'	EL	29.5	0.52	1.88	60'	EL	5.9	0.80	0.275	1.47	60'	EL	29.5	
		TNT7B	42.000	--	1.535	64.463	1.40	0.275	1.87	60'	EL	29.5	0.52	1.76	60'	EL	5.9	0.80	0.275	1.53	60'	EL	29.5	
		TNAGRIT4	43.000	--	1.450	62.329	1.40	0.275	1.76	60'	EL	29.5	0.52	1.7	60'	EL	5.9	0.80	0.275	1.45	60'	EL	29.5	
		TNAGT5A	45.000	--	1.361	61.247	1.40	0.275	1.65	60'	EL	29.5	0.52	1.71	60'	EL	5.9	0.80	0.275	1.36	60'	EL	29.5	
		TNAGT5B	45.000	(3)	1.340	60.282	1.40	0.275	1.63	60'	EL	29.5	0.52	1.61	60'	EL	5.9	0.80	0.275	**1.34**	60'	EL	**29.5**	

LOAD FACTORS:

DESIGN LOAD RATING FACTORS	LIMIT STATE	γ_{DC}	γ_{DW}
	STRENGTH I	1.25	1.50
	SERVICE III	1.00	1.00

NOTES:

MINIMUM RATING FACTORS ARE BASED ON THE STRENGTH I AND SERVICE III LIMIT STATES.

ALLOWABLE STRESSES FOR SERVICE III LIMIT STATE ARE AS REQUIRED FOR DESIGN.

COMMENTS:

1.
2.
3.
4.

(#) CONTROLLING LOAD RATING

(1) DESIGN LOAD RATING (HL-93)

(2) DESIGN LOAD RATING (HS-20)

(3) LEGAL LOAD RATING **

** SEE CHART FOR VEHICLE TYPE

GIRDER LOCATION

I - INTERIOR GIRDER
EL - EXTERIOR LEFT GIRDER
ER - EXTERIOR RIGHT GIRDER

LRFR SUMMARY

FOR SPAN 'B'

PROJECT NO. B-5744

SCOTLAND COUNTY

STATION: 15+55.00 -L-

SHEET 2 OF 2

NORTH CAROLINA PROFESSIONAL SEAL 031583 ENGINEER KRISHNA PRASAD SODAI

Krishna P. Sodai
8/29/2016

STATE OF NORTH CAROLINA
DEPARTMENT OF TRANSPORTATION
RALEIGH

STANDARD
LRFR SUMMARY FOR 60' CORED SLAB UNIT 90° SKEW
(NON-INTERSTATE TRAFFIC)

REVISIONS						SHEET NO.
NO.	BY:	DATE:	NO.	BY:	DATE:	S-5
1			3			TOTAL SHEETS
2			4			22

DOCUMENT NOT CONSIDERED FINAL UNLESS ALL SIGNATURES COMPLETED

ASSEMBLED BY : D.A. DAVENPORT DATE : 5/13/16
CHECKED BY : H.B. DESAI DATE : 8/3/16
DRAWN BY : CVC 6/10
CHECKED BY : DNS 6/10

17-AUG-2016 14:00
R:\Structures\Plans\B5744_SMU_LR.dgn
jdhawk

STD. NO. 24LRFR1_90S_60L

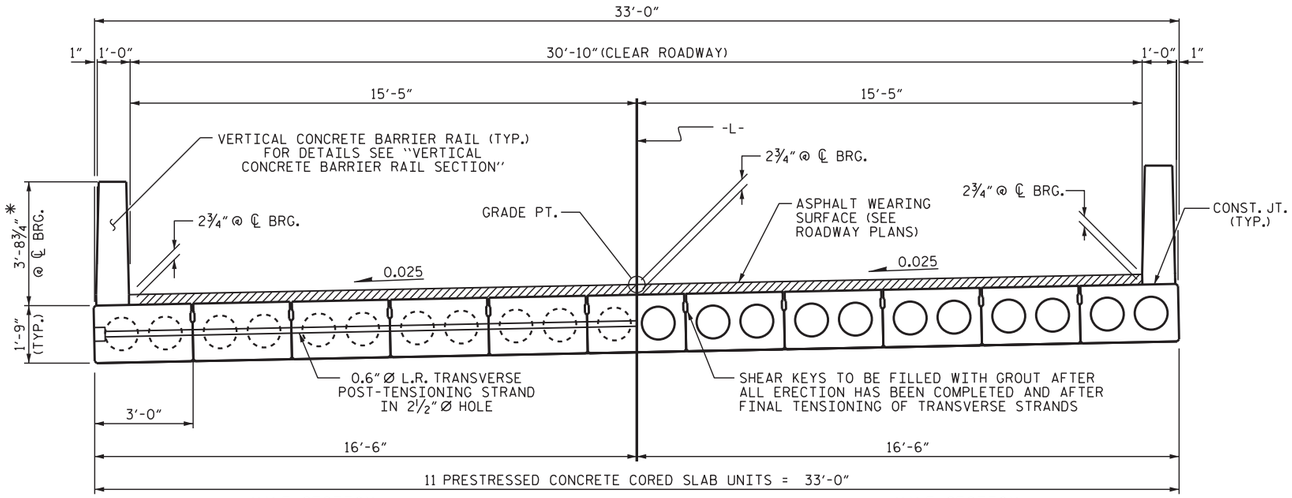

HALF SECTION
AT INTERMEDIATE DIAPHRAGMS

HALF SECTION
THROUGH VOIDS

TYPICAL SECTION

* - THE MAXIMUM BARRIER RAIL HEIGHT AND ASPHALT THICKNESS IS SHOWN. THE HEIGHT OF THE BARRIER RAIL AND ASPHALT THICKNESS VARIES WHILE THE TOP OF THE BARRIER RAIL FOLLOWS THE PROFILE OF THE GUTTERLINE. FOR RAIL HEIGHT DETAILS AND ASPHALT THICKNESS SEE THE "VERTICAL CONCRETE BARRIER RAIL SECTION" DETAIL.

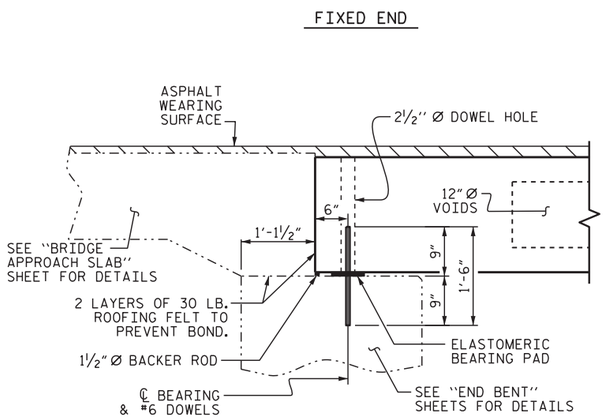

SECTION AT END BENT

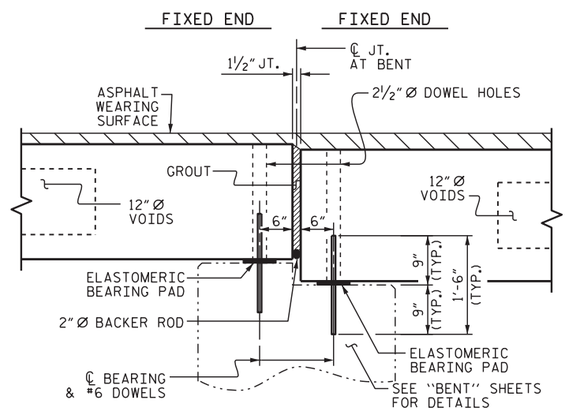

SECTION AT BENT No. 1

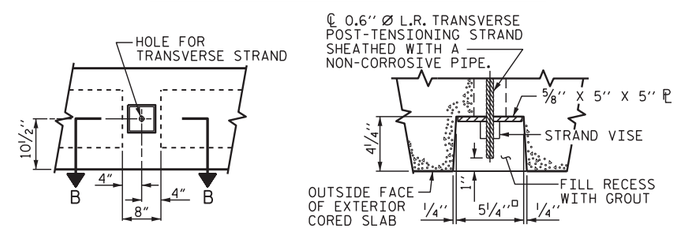

ELEVATION VIEW

SECTION B-B

GROUTED RECESS AT END OF POST-TENSIONED STRAND OF CORED SLABS

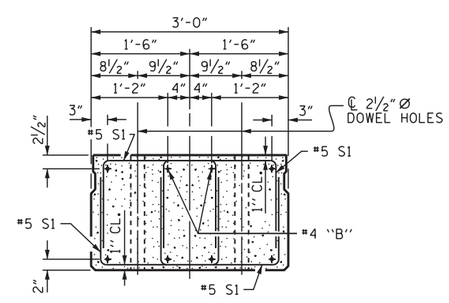

END ELEVATION

SHOWING PLACEMENT OF DOUBLE STIRRUPS AND LOCATION OF DOWEL HOLES. (STRAND LAYOUT NOT SHOWN.) INTERIOR SLAB UNIT SHOWN-EXTERIOR SLAB UNIT SIMILAR EXCEPT SHEAR KEY LOCATION.

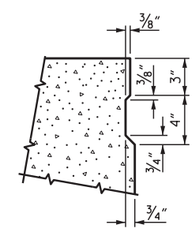

SHEAR KEY DETAIL

NOTE: OMIT SHEAR KEY ON OUTSIDE FACE OF EXTERIOR CORED SLABS.

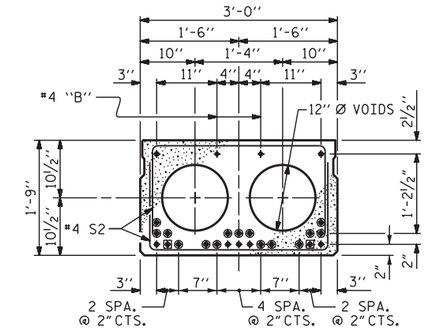

INTERIOR SLAB SECTION
(30' UNIT)
(9 STRANDS REQUIRED)

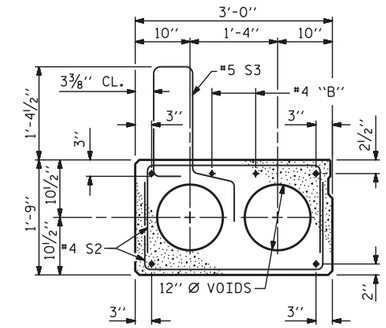

EXT. SLAB SECTION
(FOR PRESTRESSED STRAND LAYOUT, SEE INTERIOR SLAB SECTION.)

0.6" Ø LOW RELAXATION STRAND LAYOUT

◉ BOND SHALL BE BROKEN ON THESE STRANDS FOR A DISTANCE OF 2'-0" FROM END OF CORED SLAB UNIT. SEE STANDARD SPECIFICATIONS, ARTICLE 1078-7.

◉ OPTIONAL FULL LENGTH DEBONDED STRANDS. THESE STRANDS ARE NOT REQUIRED. IF THE FABRICATOR CHOOSES TO INCLUDE THESE STRANDS IN THE CORED SLAB UNIT, THE STRANDS SHALL BE DEBONDED FOR THE FULL LENGTH OF THE UNIT AT NO ADDITIONAL COST. SEE STANDARD SPECIFICATIONS, ARTICLE 1078-7.

DEBONDING LEGEND

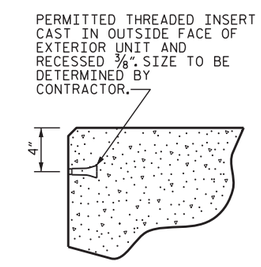

THREADED INSERT DETAIL

PROJECT NO. B-5744
SCOTLAND COUNTY
STATION: 15+55.00-L-

SHEET 1 OF 2

STATE OF NORTH CAROLINA
DEPARTMENT OF TRANSPORTATION
RALEIGH

STANDARD
3'-0" X 1'-9"
PRESTRESSED CONCRETE CORED SLAB UNIT
90° SKEW

NORTH CAROLINA PROFESSIONAL SEAL 031583 ENGINEER KRISHNA PRASAD SODAI

Docusigned by: Krishna P. Sodai
Aug 24, 2016 08:47 PDT
8/23/2016

ASSEMBLED BY : D.A. DAVENPORT	DATE : 5/12/16
CHECKED BY : H. B. DESAI	DATE : 8/3/16
DRAWN BY : DGE 5/09	REV. 9/14 MAA/TMG
CHECKED BY : BCH 6/09	

DOCUMENT NOT CONSIDERED FINAL UNLESS ALL SIGNATURES COMPLETED

REVISIONS								SHEET NO.
NO.	BY:	DATE:	NO.	BY:	DATE:			S-6
1			3					TOTAL SHEETS
2			4					22

STD. NO. 21" PCS2_33_90S

17-AUG-2016 14:01
R:\Structures\Plans\B5744_SMU_TS.dgn
jdhawk

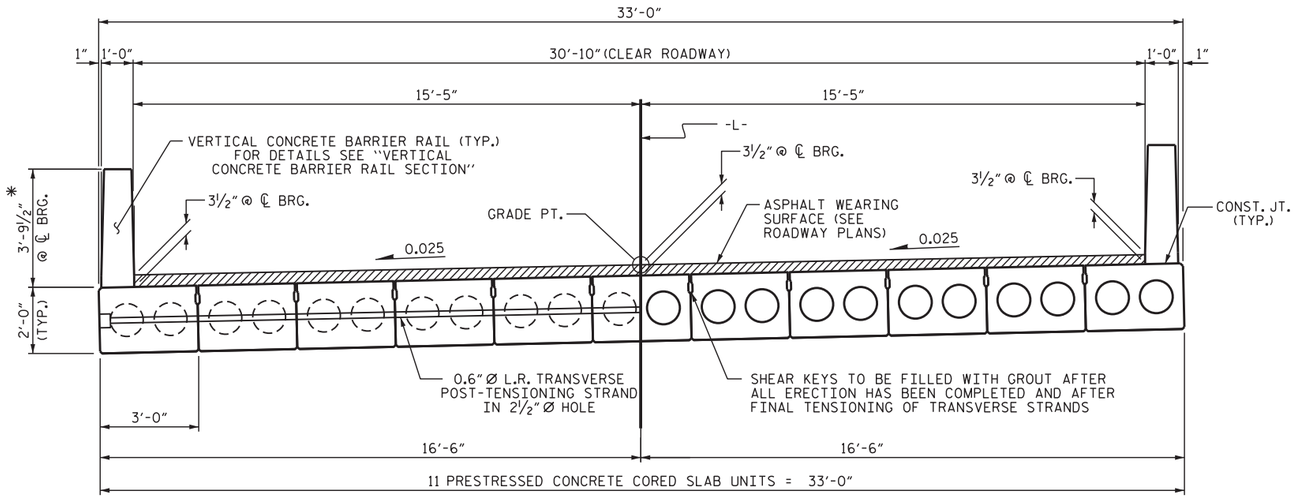

HALF SECTION
AT INTERMEDIATE DIAPHRAGMS

TYPICAL SECTION

HALF SECTION
THROUGH VOIDS

* - THE MAXIMUM BARRIER RAIL HEIGHT AND ASPHALT THICKNESS IS SHOWN. THE HEIGHT OF THE BARRIER RAIL AND ASPHALT THICKNESS VARIES WHILE THE TOP OF THE BARRIER RAIL FOLLOWS THE PROFILE OF THE GUTTERLINE. FOR RAIL HEIGHT DETAILS AND ASPHALT THICKNESS, SEE THE "VERTICAL CONCRETE BARRIER RAIL SECTION" DETAIL.

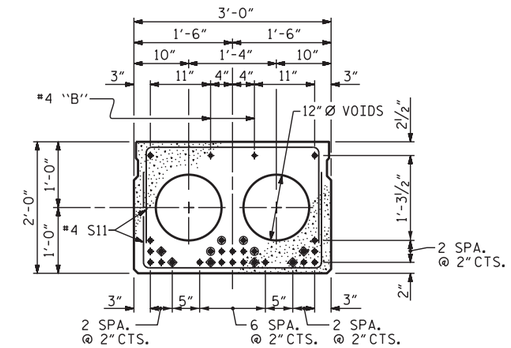

INTERIOR SLAB SECTION (60' UNIT)
(24 STRANDS REQUIRED)

0.6" Ø LOW RELAXATION STRAND LAYOUT

◈ BOND SHALL BE BROKEN ON THESE STRANDS FOR A DISTANCE OF 12'-0" FROM END OF CORED SLAB UNIT. SEE STANDARD SPECIFICATIONS, ARTICLE 1078-7.

◉ OPTIONAL FULL LENGTH DEBONDED STRANDS. THESE STRANDS ARE NOT REQUIRED. IF THE FABRICATOR CHOOSES TO INCLUDE THESE STRANDS IN THE CORED SLAB UNIT, THE STRANDS SHALL BE DEBONDED FOR THE FULL LENGTH OF THE UNIT AT NO ADDITIONAL COST. SEE STANDARD SPECIFICATIONS, ARTICLE 1078-7.

DEBONDING LEGEND

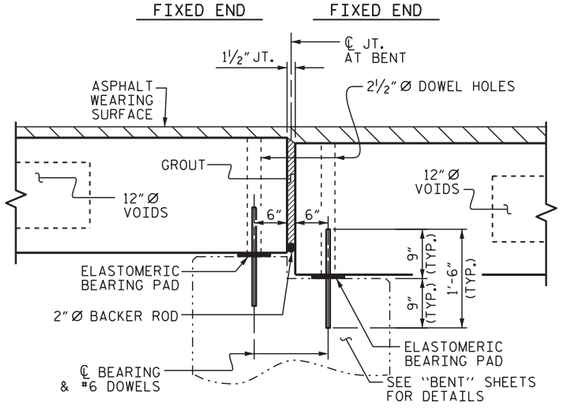

SECTION AT BENT No. 1

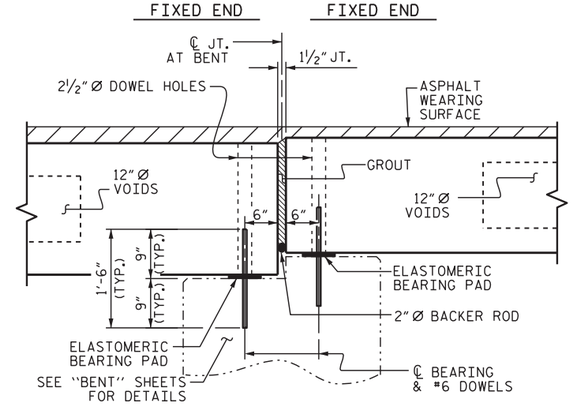

SECTION AT BENT No. 2

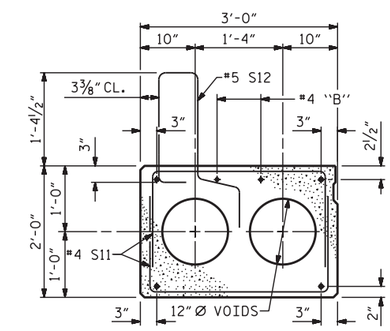

EXTERIOR SLAB SECTION

(FOR PRESTRESSED STRAND LAYOUT, SEE INTERIOR SLAB SECTION.)

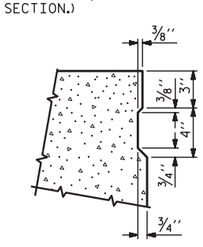

SHEAR KEY DETAIL

NOTE: OMIT SHEAR KEY ON OUTSIDE FACE OF EXTERIOR CORED SLABS.

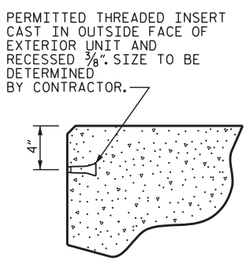

THREADED INSERT DETAIL

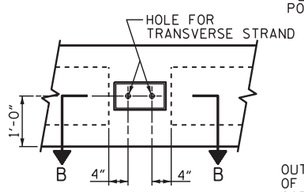

ELEVATION VIEW

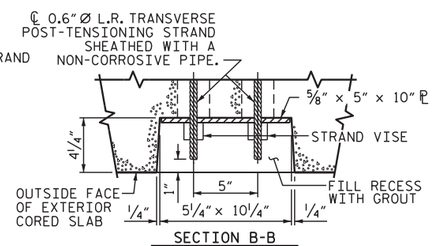

SECTION B-B

GROUTED RECESS AT END OF POST-TENSIONED STRAND • CORED SLABS

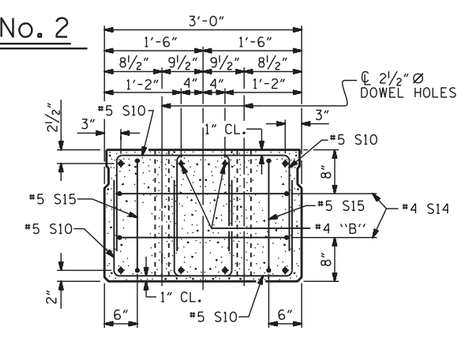

END ELEVATION

SHOWING PLACEMENT OF DOUBLE STIRRUPS AND LOCATION OF DOWEL HOLES. (STRAND LAYOUT NOT SHOWN.) INTERIOR SLAB UNIT SHOWN-EXTERIOR SLAB UNIT SIMILAR EXCEPT SHEAR KEY LOCATION.

PROJECT NO. B-5744
SCOTLAND COUNTY
STATION: 15+55.00-L-

SHEET 2 OF 2

STATE OF NORTH CAROLINA
DEPARTMENT OF TRANSPORTATION
RALEIGH

STANDARD

3'-0" X 2'-0" PRESTRESSED CONCRETE CORED SLAB UNIT

NORTH CAROLINA PROFESSIONAL SEAL 031583 ENGINEER KRISHNA PRASAD SEDAI

Digitally signed by Krishna P. Sedai
Date: 2016.08.29 08:47:00 -04'00'
8/29/2016

DOCUMENT NOT CONSIDERED FINAL UNLESS ALL SIGNATURES COMPLETED

REVISIONS							
NO.	BY:	DATE:	NO.	BY:	DATE:	SHEET NO.	S-7
1			3			TOTAL SHEETS	22
2			4				

ASSEMBLED BY : D.A. DAVENPORT		DATE : 5/12/16	
CHECKED BY : H. B. DESAI		DATE : 8/3/16	
DRAWN BY : MAA	6/10	REV. 9/14	MAA/TMG
CHECKED BY : MKT	7/10		

17-AUG-2016 14:01
R:\Structures\Plans\B5744_SMU_TS.dgn
jdhawk

STD. NO. 24PCS4_33_90S

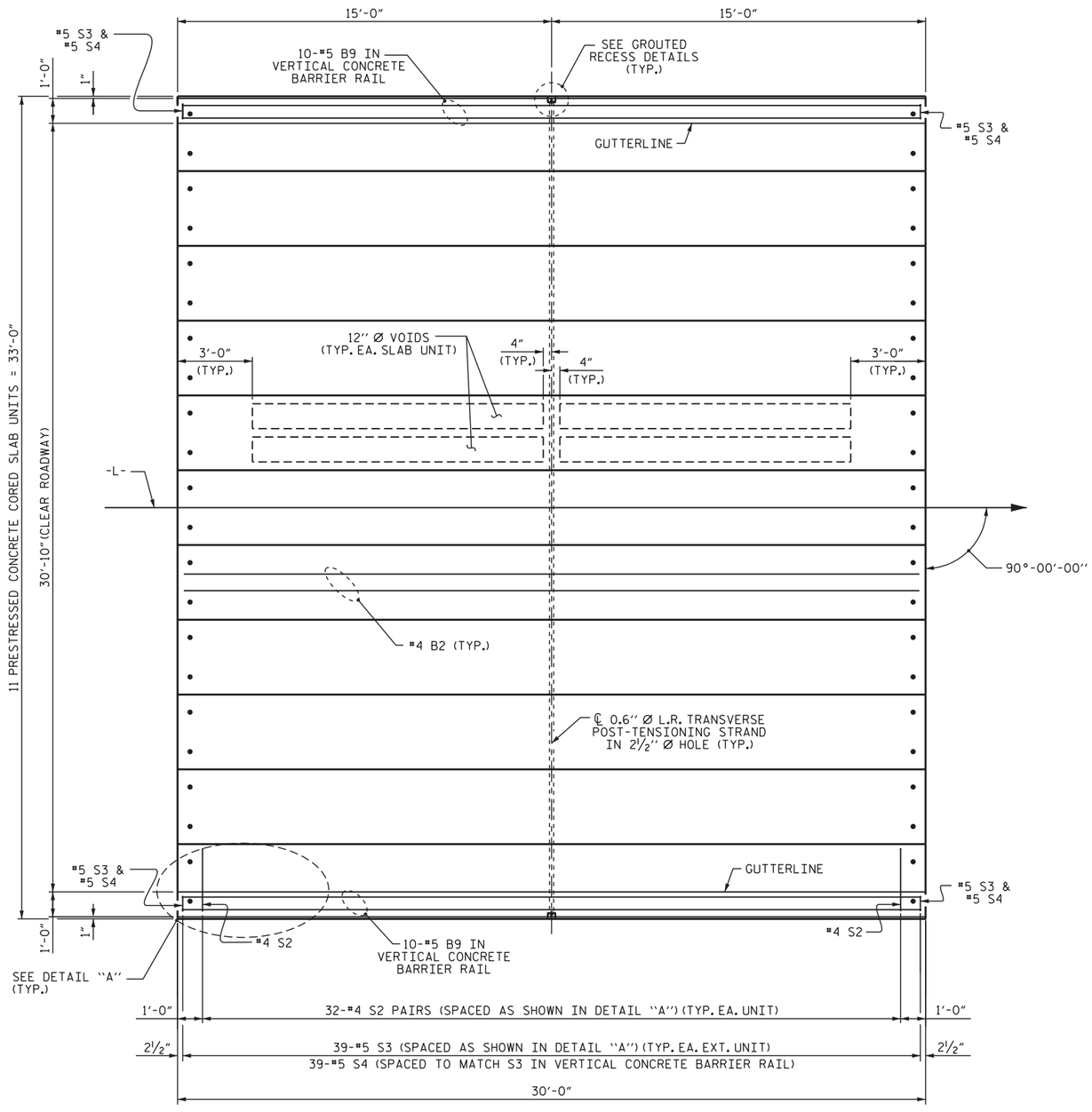

PLAN OF UNIT

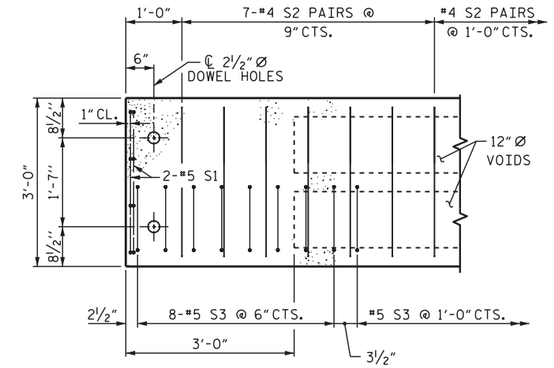

DETAIL "A"

(TYPICAL EACH END OF UNIT)
NOTE: EXTERIOR UNIT SHOWN - INTERIOR UNIT SIMILAR EXCEPT OMIT #5 S3 BARS.

PROJECT NO. B-5744
SCOTLAND COUNTY
STATION: 15+55.00 -L-

SHEET 3 OF 6

STATE OF NORTH CAROLINA
DEPARTMENT OF TRANSPORTATION
RALEIGH

PLAN OF 30' UNIT
30'-10" CLEAR ROADWAY
90° SKEW

NORTH CAROLINA PROFESSIONAL SEAL 031583 ENGINEER KRISHNA PRASAD SODAI

Digitally signed by Krishna P. Sodai
Date: 2016.08.29 08:29:00 -04'00'
8/29/2016

DOCUMENT NOT CONSIDERED FINAL UNLESS ALL SIGNATURES COMPLETED

REVISIONS						
NO.	BY:	DATE:	NO.	BY:	DATE:	
1			3			
2			4			

SHEET NO. S-8
TOTAL SHEETS 22

ASSEMBLED BY : D.A. DAVENPORT		DATE : 5/13/16	
CHECKED BY : H. B. DESAI		DATE : 8/3/16	
DRAWN BY : DGE 3/09	REV. 12/5/11	MAA/AAC	
CHECKED BY : BCH 3/09	REV. 8/14	MAA/TMG	

17-AUG-2016 14:00
R:\Structures\Plans\B5744_SMU_PS.dgn
jdhawk

STD. NO. 21" PCS_33_90S_30L

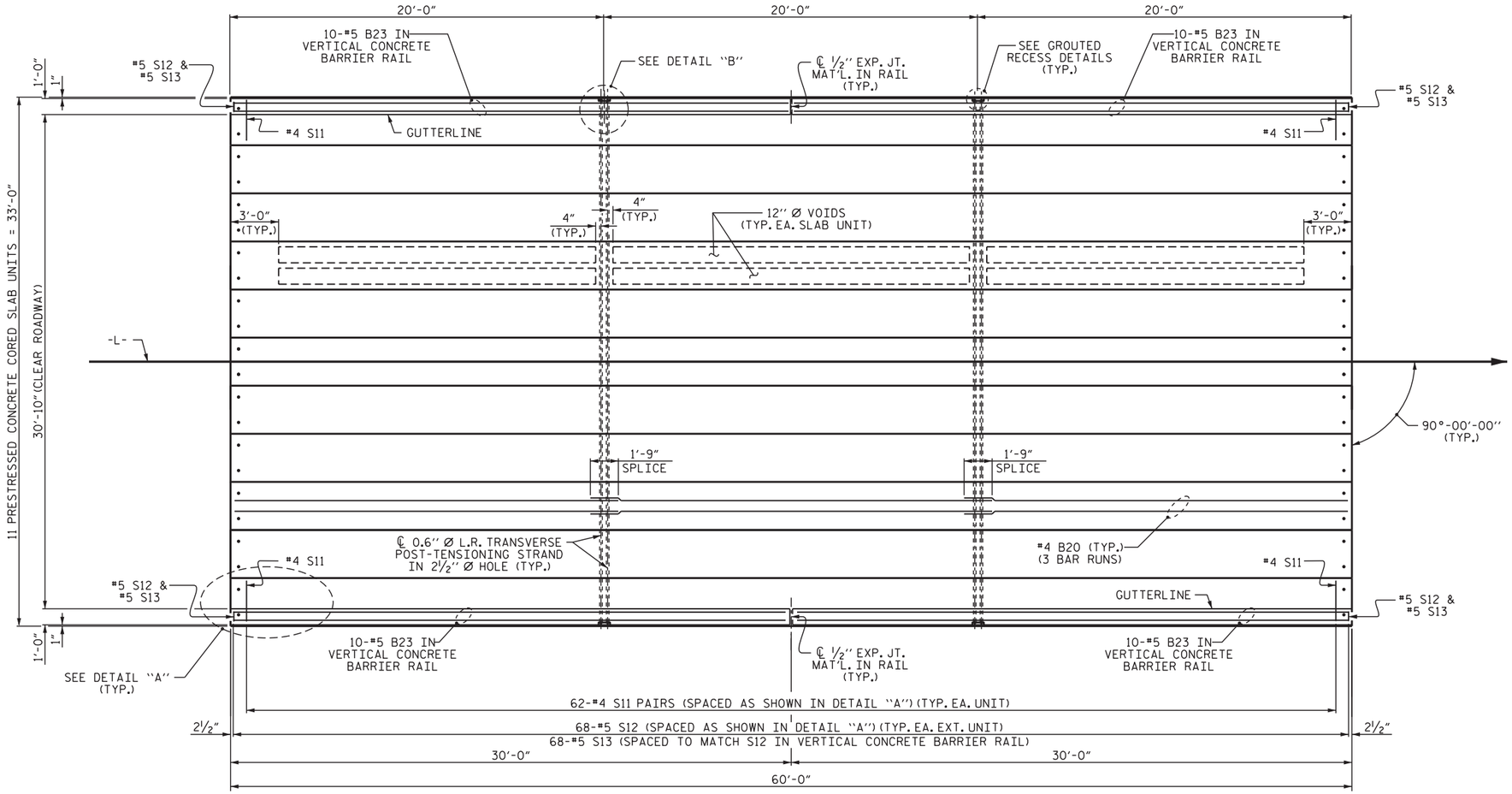

PLAN OF UNIT

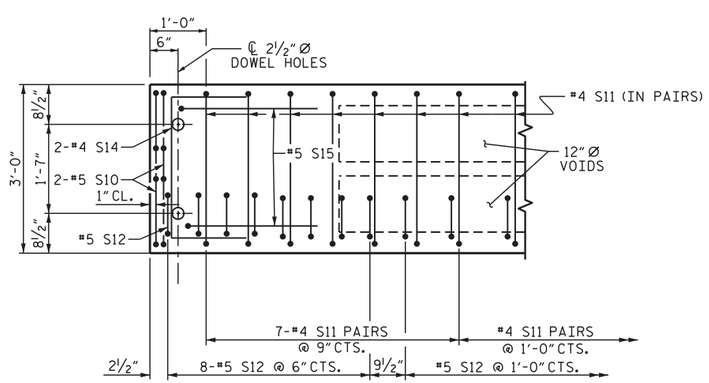

DETAIL "A"

(TYPICAL EACH END OF UNIT)
NOTE: EXTERIOR UNIT SHOWN - INTERIOR UNIT SIMILAR EXCEPT OMIT #5 S12 BARS.

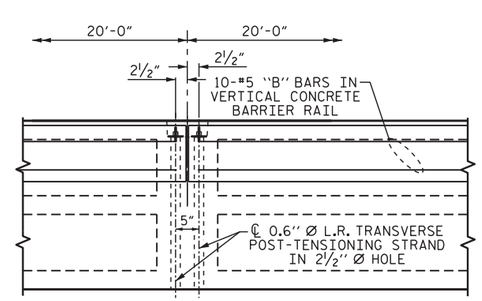

DETAIL "B"

#4 S11 BARS MAY BE SHIFTED AS NECESSARY TO MAINTAIN 1" CLEAR TO GROUTED RECESS AND 2 1/2" Ø TRANSVERSE POST-TENSIONING STRAND HOLES

PROJECT NO. B-5744
SCOTLAND COUNTY
STATION: 15+55.00 -L-

SHEET 4 OF 6

STATE OF NORTH CAROLINA
DEPARTMENT OF TRANSPORTATION
RALEIGH

PLAN OF 60' UNIT 30'-10" CLEAR ROADWAY 90° SKEW

NORTH CAROLINA PROFESSIONAL SEAL 031583 ENGINEER KRISHNA PRASAD SODAI

Documented by: Krishna P. Sodai
Act/24EN2EL4/ 8/29/2016

ASSEMBLED BY : D.A. DAVENPORT	DATE : 5/13/16
CHECKED BY : H. B. DESAI	DATE : 8/3/16

DRAWN BY : MAA	6/10	REV. 12/5/11	MAA/AAC
CHECKED BY : MKT	7/10	REV. 8/14	MAA/TMG

17-AUG-2016 14:00
R:\Structures\Plans\B5744_SMU_PS.dgn
jdhawk

DOCUMENT NOT CONSIDERED FINAL UNLESS ALL SIGNATURES COMPLETED

REVISIONS						SHEET NO.
NO.	BY:	DATE:	NO.	BY:	DATE:	S-9
1			3			TOTAL SHEETS
2			4			22

STD. NO. 24PCS_33_90S_60L

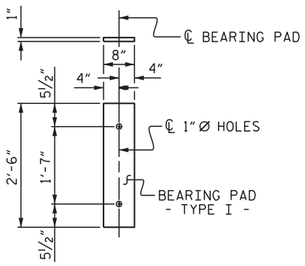

FIXED END
(TYPE I - 44 REQ'D.)

ELASTOMERIC BEARING DETAILS

ELASTOMER IN ALL BEARINGS SHALL BE 60 DUROMETER HARDNESS.

DEAD LOAD DEFLECTION AND CAMBER

	3'-0" x 1'-9"
30' CORED SLAB UNIT	0.6" Ø L.R. STRAND
CAMBER (SLAB ALONE IN PLACE)	¼" ↑
DEFLECTION DUE TO SUPERIMPOSED DEAD LOAD ✱✱	⅛" ↓
FINAL CAMBER	⅛" ↑

✱✱ INCLUDES FUTURE WEARING SURFACE

BILL OF MATERIAL FOR ONE 30' CORED SLAB UNIT

				EXTERIOR UNIT		INTERIOR UNIT	
BAR	NUMBER	SIZE	TYPE	LENGTH	WEIGHT	LENGTH	WEIGHT
B2	2	#4	STR	29'-8"	40	29'-8"	40
S1	8	#5	3	4'-3"	35	4'-3"	35
S2	64	#4	3	5'-4"	228	5'-4"	228
✱ S3	39	#5	1	5'-7"	227		
REINFORCING STEEL			LBS.		303		303
✱ EPOXY COATED REINFORCING STEEL			LBS.		227		
5000 P.S.I. CONCRETE			CU. YDS.		4.4		4.4
0.6" Ø L.R. STRANDS			No.		9		9

BAR TYPES

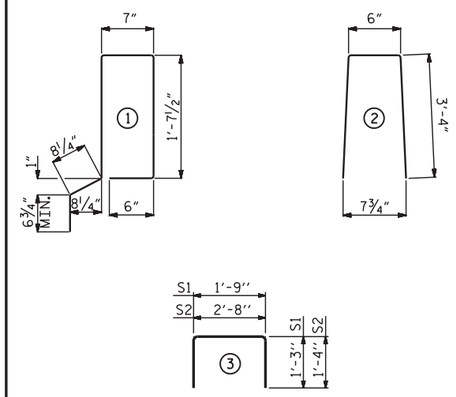

ALL BAR DIMENSIONS ARE OUT TO OUT

CORED SLABS REQUIRED

	NUMBER	LENGTH	TOTAL LENGTH
30' UNIT			
EXTERIOR C.S.	4	30'-0"	120'-0"
INTERIOR C.S.	18	30'-0"	540'-0"
TOTAL	22	-	660'-0"

BILL OF MATERIAL FOR VERTICAL CONCRETE BARRIER RAIL

BAR	BARS PER PAIR OF EXTERIOR UNITS	TOTAL NO.	SIZE	TYPE	LENGTH	WEIGHT
	30' UNIT					
✱ B9	20	40	#5	STR	29'-7"	1234
✱ S4	78	156	#5	2	7'-2"	1166
✱ EPOXY COATED REINFORCING STEEL				LBS.		2400
CLASS AA CONCRETE				CU.YDS.		15.4
TOTAL VERTICAL CONCRETE BARRIER RAIL				LN. FT.		120.25

GUTTERLINE ASPHALT THICKNESS & RAIL HEIGHT

	ASPHALT OVERLAY THICKNESS	RAIL HEIGHT
	@ MID-SPAN	@ MID-SPAN
30' UNITS	2⅝"	3'-8⅝"

NOTES

ALL PRESTRESSING STRANDS SHALL BE 7-WIRE LOW RELAXATION GRADE 270 STRANDS AND SHALL CONFORM TO AASHTO M203 EXCEPT FOR SAMPLING REQUIREMENTS WHICH SHALL BE IN ACCORDANCE WITH THE STANDARD SPECIFICATIONS.

ALL REINFORCING STEEL CAST WITH THE CORED SLAB SECTIONS SHALL BE GRADE 60 AND SHALL BE INCLUDED IN THE UNIT PRICE BID FOR PRESTRESSED CONCRETE CORED SLABS.

RECESSES FOR TRANSVERSE STRANDS SHALL BE GROUTED AFTER THE TENSIONING OF THE STRANDS.

THE 2½" Ø DOWEL HOLES AT FIXED ENDS OF SLAB SECTIONS SHALL BE FILLED WITH NON-SHRINK GROUT.

THE BACKER RODS SHALL CONFORM TO THE REQUIREMENTS OF TYPE M BOND BREAKER. SEE SECTION 1028 OF THE STANDARD SPECIFICATIONS.

WHEN CORED SLABS ARE CAST, AN INTERNAL HOLD-DOWN SYSTEM SHALL BE EMPLOYED TO PREVENT VOIDS FROM RISING OR MOVING SIDEWAYS. AT LEAST SIX WEEKS PRIOR TO CASTING CORED SLABS, THE CONTRACTOR SHALL SUBMIT TO THE ENGINEER FOR REVIEW AND COMMENT, DETAILED DRAWINGS OF THE PROPOSED HOLD-DOWN SYSTEM. IN ADDITION TO STRUCTURAL DETAILS, LOCATION AND SPACING OF THE HOLD-DOWNS SHALL BE INDICATED.

ALL REINFORCING STEEL IN THE VERTICAL CONCRETE BARRIER RAIL SHALL BE EPOXY COATED.

PRESTRESSING STRANDS SHALL BE CUT FLUSH WITH THE CORED SLAB UNIT ENDS.

APPLY EPOXY PROTECTIVE COATING TO CORED SLAB UNIT ENDS.

GROOVED CONTRACTION JOINTS, ½" IN DEPTH, SHALL BE TOOLED IN ALL EXPOSED FACES OF THE BARRIER RAIL AND IN ACCORDANCE WITH ARTICLE 825-10(B) OF THE STANDARD SPECIFICATIONS. A CONTRACTION JOINT SHALL BE LOCATED AT EACH THIRD POINT BETWEEN BARRIER RAIL EXPANSION JOINTS. ONLY ONE CONTRACTION JOINT IS REQUIRED AT MIDPOINT OF BARRIER RAIL SEGMENTS LESS THAN 20 FEET IN LENGTH AND NO CONTRACTION JOINTS ARE REQUIRED FOR THOSE SEGMENTS LESS THAN 10 FEET IN LENGTH.

FLAME CUTTING OF THE TRANSVERSE POST-TENSIONING STRAND IS NOT ALLOWED.

THE TRANSFER OF LOAD FROM THE ANCHORAGES TO THE CORED SLAB UNIT SHALL BE DONE WHEN THE CONCRETE HAS REACHED A COMPRESSIVE STRENGTH OF NOT LESS THAN THE REQUIRED STRENGTH SHOWN IN THE "CONCRETE RELEASE STRENGTH" TABLE.

FOR GROUT FOR STRUCTURES, SEE SPECIAL PROVISIONS.

THE PERMITTED THREADED INSERTS ARE DETAILED AS AN OPTION FOR THE CONTRACTOR TO ATTACH FALSEWORK AND FORMWORK DURING CONSTRUCTION.

THE PERMITTED THREADED INSERTS IN THE EXTERIOR UNITS SHALL BE SIZED BY THE CONTRACTOR, SPACED AT 4'-0" CENTERS AND GALVANIZED IN ACCORDANCE WITH SECTION 1076 OF THE STANDARD SPECIFICATIONS. STAINLESS STEEL THREADED INSERTS MAY BE USED AS AN ALTERNATE.

THE PERMITTED THREADED INSERTS SHALL BE GROUTED BY THE CONTRACTOR IMMEDIATELY FOLLOWING REMOVAL OF THE FALSEWORK.

THE COST OF THE PERMITTED THREADED INSERTS SHALL BE INCLUDED IN THE PRICE BID FOR THE PRECAST UNITS.

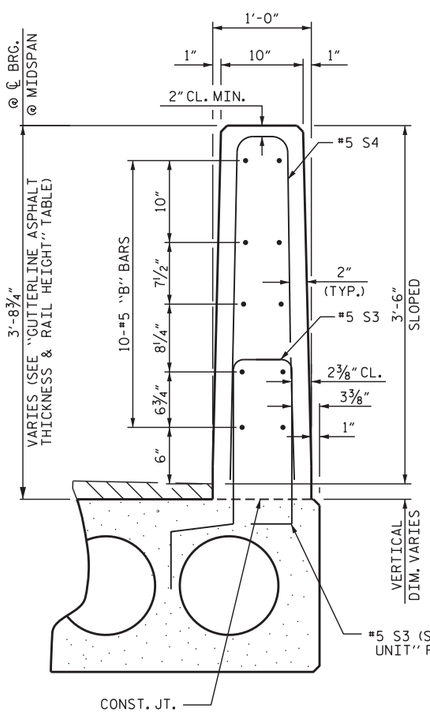

VERTICAL CONCRETE BARRIER RAIL SECTION

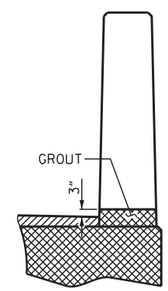

SECTION T-T
AT OPEN JOINT AT BENT
(THIS IS TO BE USED WHERE FOAM JOINT IS NOT USED)

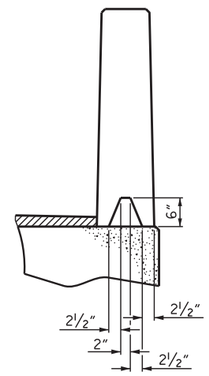

SECTION S-S
AT DAM IN OPEN JOINT
(THIS IS TO BE USED ONLY WHEN SLIP FORM IS USED)

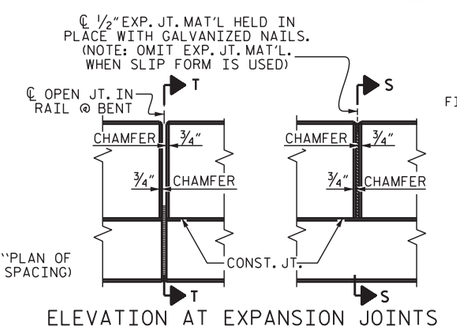

ELEVATION AT EXPANSION JOINTS

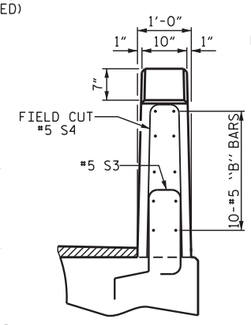

END VIEW

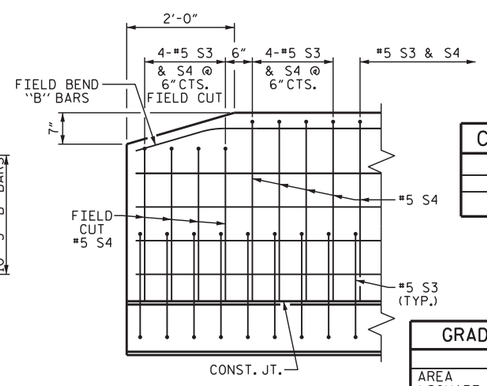

SIDE VIEW

END OF RAIL DETAILS

CONCRETE RELEASE STRENGTH

UNIT	PSI
30' UNITS	4000

GRADE 270 STRANDS

	0.6" Ø L.R.
AREA (SQUARE INCHES)	0.217
ULTIMATE STRENGTH (LBS. PER STRAND)	58,600
APPLIED PRESTRESS (LBS. PER STRAND)	43,950

NORTH CAROLINA PROFESSIONAL SEAL 031583 ENGINEER KRISHNA PRASAD SEDAI

Digitally signed by Krishna P. Sedai
Date: 2016.08.29 11:45:21 -04'00'
8/29/2016

PROJECT NO. B-5744
SCOTLAND COUNTY
STATION: 15+55.00 -L-

SHEET 5 OF 6

STATE OF NORTH CAROLINA
DEPARTMENT OF TRANSPORTATION
RALEIGH

STANDARD
3'-0" X 1'-9"
PRESTRESSED CONCRETE
CORED SLAB UNIT
90° SKEW
SPANS A & C

ASSEMBLED BY : K. P. SEDAI	DATE : 8/15/16
CHECKED BY : H. B. DESAI	DATE : 8/16/16
DRAWN BY : DGE 5/09	REV. 11/14 MAA/TMG
CHECKED BY : BCH 6/09	

DOCUMENT NOT CONSIDERED FINAL UNLESS ALL SIGNATURES COMPLETED

REVISIONS						SHEET NO.
NO.	BY:	DATE:	NO.	BY:	DATE:	S-10
1			3			TOTAL SHEETS
2			4			22

17-AUG-2016 14:00
R:\Structures\Plans\B5744_SMU_CS.dgn
jdhawk

STD. NO. 21" PCS3_33_90S

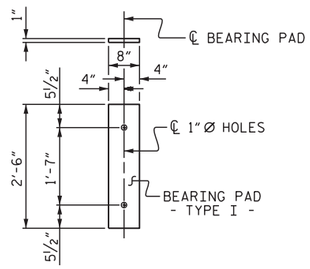

FIXED END
(TYPE I - 22 REQ'D.)

ELASTOMERIC BEARING DETAILS

ELASTOMER IN ALL BEARINGS SHALL BE 60 DUROMETER HARDNESS.

DEAD LOAD DEFLECTION AND CAMBER	
	3'-0" x 2'-0"
60' CORED SLAB UNIT	0.6" Ø L.R. STRAND
CAMBER (SLAB ALONE IN PLACE)	1⅞" ↑
DEFLECTION DUE TO SUPERIMPOSED DEAD LOAD**	½" ↑
FINAL CAMBER	1⅜" ↑

** INCLUDES FUTURE WEARING SURFACE

BILL OF MATERIAL FOR ONE 60' CORED SLAB UNIT

				EXTERIOR UNIT		INTERIOR UNIT	
BAR	NUMBER	SIZE	TYPE	LENGTH	WEIGHT	LENGTH	WEIGHT
B20	6	#4	STR	21'-2"	85	21'-2"	85
S10	8	#5	3	4'-9"	40	4'-9"	40
S11	124	#4	3	5'-10"	483	5'-10"	483
*S12	68	#5	1	5'-7"	396		
S14	4	#4	3	5'-7"	15	5'-7"	15
S15	4	#5	3	7'-1"	30	7'-1"	30
REINFORCING STEEL			LBS.		653		653
* EPOXY COATED REINFORCING STEEL			LBS.		396		
6000 P.S.I. CONCRETE			CU. YDS.		10.2		10.2
0.6" Ø L.R. STRANDS			No.		24		24

BAR TYPES

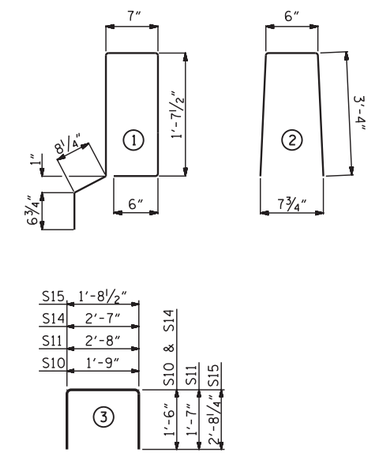

ALL BAR DIMENSIONS ARE OUT TO OUT

CORED SLABS REQUIRED

	NUMBER	LENGTH	TOTAL LENGTH
60' UNIT			
EXTERIOR C.S.	2	60'-0"	120'-0"
INTERIOR C.S.	9	60'-0"	540'-0"
TOTAL	11	-	660'-0"

NOTES

ALL PRESTRESSING STRANDS SHALL BE 7-WIRE LOW RELAXATION GRADE 270 STRANDS AND SHALL CONFORM TO AASHTO M203 EXCEPT FOR SAMPLING REQUIREMENTS WHICH SHALL BE IN ACCORDANCE WITH THE STANDARD SPECIFICATIONS.

ALL REINFORCING STEEL CAST WITH THE CORED SLAB SECTIONS SHALL BE GRADE 60 AND SHALL BE INCLUDED IN THE UNIT PRICE BID FOR PRESTRESSED CONCRETE CORED SLABS.

RECESSES FOR TRANSVERSE STRANDS SHALL BE GROUTED AFTER THE TENSIONING OF THE STRANDS.

THE 2½" Ø DOWEL HOLES AT FIXED ENDS OF SLAB SECTIONS SHALL BE FILLED WITH NON-SHRINK GROUT.

THE BACKER RODS SHALL CONFORM TO THE REQUIREMENTS OF TYPE M BOND BREAKER. SEE SECTION 1028 OF THE STANDARD SPECIFICATIONS.

WHEN CORED SLABS ARE CAST, AN INTERNAL HOLD-DOWN SYSTEM SHALL BE EMPLOYED TO PREVENT VOIDS FROM RISING OR MOVING SIDEWAYS. AT LEAST SIX WEEKS PRIOR TO CASTING CORED SLABS, THE CONTRACTOR SHALL SUBMIT TO THE ENGINEER FOR REVIEW AND COMMENT, DETAILED DRAWINGS OF THE PROPOSED HOLD-DOWN SYSTEM. IN ADDITION TO STRUCTURAL DETAILS, LOCATION AND SPACING OF THE HOLD-DOWNS SHALL BE INDICATED.

THE TRANSFER OF LOAD FROM THE ANCHORAGES TO THE CORED SLAB UNIT SHALL BE DONE WHEN THE CONCRETE HAS REACHED A COMPRESSIVE STRENGTH OF NOT LESS THAN THE REQUIRED STRENGTH SHOWN IN THE "CONCRETE RELEASE STRENGTH" TABLE.

ALL REINFORCING STEEL IN VERTICAL CONCRETE BARRIER RAILS SHALL BE EPOXY COATED.

PRESTRESSING STRANDS SHALL BE CUT FLUSH WITH THE CORED SLAB UNIT ENDS.

APPLY EPOXY PROTECTIVE COATING TO CORED SLAB UNIT ENDS.

GROOVED CONTRACTION JOINTS, ½" IN DEPTH, SHALL BE TOOLED IN ALL EXPOSED FACES OF THE BARRIER RAIL AND IN ACCORDANCE WITH ARTICLE 825-10(B) OF THE STANDARD SPECIFICATIONS. A CONTRACTION JOINT SHALL BE LOCATED AT EACH THIRD POINT BETWEEN BARRIER RAIL EXPANSION JOINTS. ONLY ONE CONTRACTION JOINT IS REQUIRED AT MIDPOINT OF BARRIER RAIL SEGMENTS LESS THAN 20 FEET IN LENGTH AND NO CONTRACTION JOINTS ARE REQUIRED FOR THOSE SEGMENTS LESS THAN 10 FEET IN LENGTH.

FLAME CUTTING OF THE TRANSVERSE POST-TENSIONING STRAND IS NOT ALLOWED.

MAINTAIN A SYMMETRIC TENSION FORCE BETWEEN EACH PAIR OF TRANSVERSE POST TENSIONING STRANDS IN THE DIAPHRAGM.

THE #4 S11 STIRRUPS MAY BE SHIFTED AS NECESSARY TO MAINTAIN 1" CLEAR TO THE GROUTED RECESS.

FOR GROUT FOR STRUCTURES, SEE SPECIAL PROVISIONS.

THE PERMITTED THREADED INSERTS ARE DETAILED AS AN OPTION FOR THE CONTRACTOR TO ATTACH FALSEWORK AND FORMWORK DURING CONSTRUCTION.

THE PERMITTED THREADED INSERTS IN THE EXTERIOR UNITS SHALL BE SIZED BY THE CONTRACTOR, SPACED AT 4'-0" CENTERS AND GALVANIZED IN ACCORDANCE WITH SECTION 1076 OF THE STANDARD SPECIFICATIONS. STAINLESS STEEL THREADED INSERTS MAY BE USED AS AN ALTERNATE.

THE PERMITTED THREADED INSERTS SHALL BE GROUTED BY THE CONTRACTOR IMMEDIATELY FOLLOWING REMOVAL OF THE FALSEWORK.

THE COST OF THE PERMITTED THREADED INSERTS SHALL BE INCLUDED IN THE PRICE BID FOR THE PRECAST UNITS.

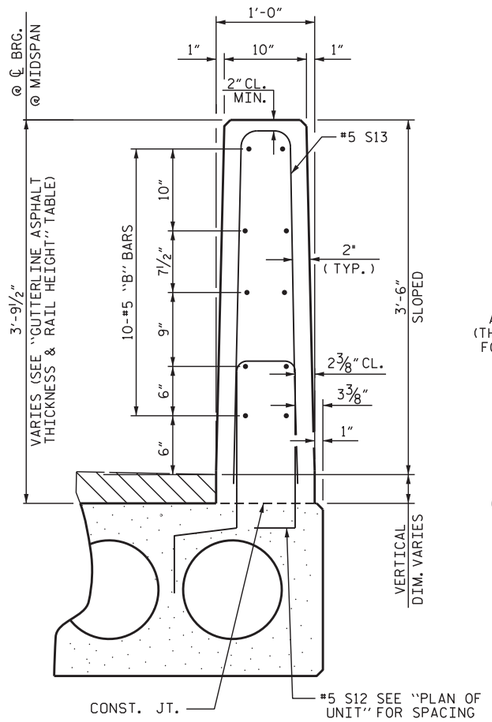

SECTION THRU RAIL

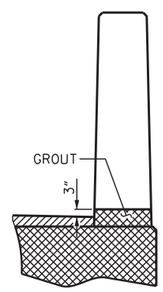

SECTION T-T
AT OPEN JOINT AT BENT
(THIS IS TO BE USED WHERE FOAM JOINT IS NOT USED)

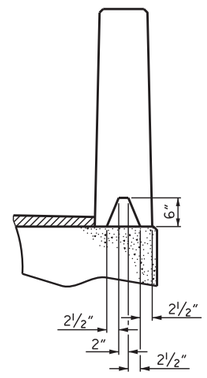

SECTION S-S
AT DAM IN OPEN JOINT
(THIS IS TO BE USED ONLY WHEN SLIP FORM IS USED)

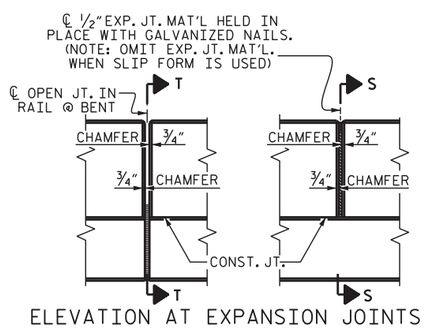

ELEVATION AT EXPANSION JOINTS

BILL OF MATERIAL FOR VERTICAL CONCRETE BARRIER RAIL

BAR	BARS PER PAIR OF EXTERIOR UNITS	TOTAL NO.	SIZE	TYPE	LENGTH	WEIGHT
	60' UNIT					
*B23	40	40	#5	STR	29'-7"	1234
*S13	136	136	#5	2	7'-2"	1017
* EPOXY COATED REINFORCING STEEL				LBS.		2251
CLASS AA CONCRETE				CU.YDS.		15.5
TOTAL VERTICAL CONCRETE BARRIER RAIL				LN. FT.		120.25

GUTTERLINE ASPHALT THICKNESS & RAIL HEIGHT

	ASPHALT OVERLAY THICKNESS @ MID-SPAN	RAIL HEIGHT @ MID-SPAN
60' UNITS	2⅛"	3'-8⅛"

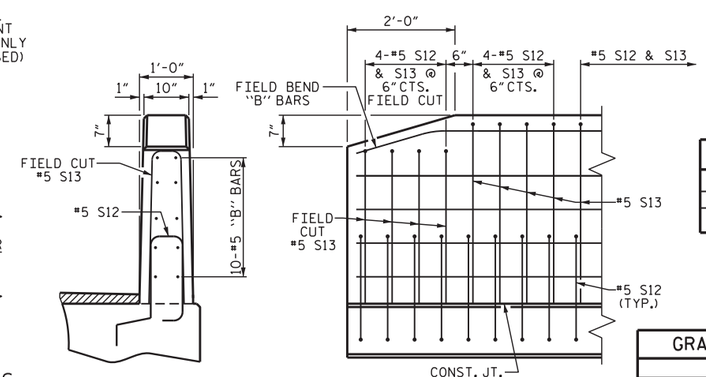

END VIEW

SIDE VIEW

END OF RAIL DETAILS

VERTICAL CONCRETE BARRIER RAIL DETAILS

CONCRETE RELEASE STRENGTH

UNIT	PSI
60' UNITS	4800

GRADE 270 STRANDS

	0.6" Ø L.R.
AREA (SQUARE INCHES)	0.217
ULTIMATE STRENGTH (LBS. PER STRAND)	58,600
APPLIED PRESTRESS (LBS. PER STRAND)	43,950

NORTH CAROLINA PROFESSIONAL SEAL 031583 ENGINEER KRISHNA PRASAD SEDAI

Documents by: Krishna P. Sedai
Acct: 24 ENGINEERS 8/29/2016

DOCUMENT NOT CONSIDERED FINAL UNLESS ALL SIGNATURES COMPLETED

PROJECT NO. B-5744
SCOTLAND COUNTY
STATION: 15+55.00 -L-

SHEET 6 OF 6

STATE OF NORTH CAROLINA
DEPARTMENT OF TRANSPORTATION
RALEIGH

STANDARD
3'-0" X 2'-0"
PRESTRESSED CONCRETE CORED SLAB UNIT
SPAN B

REVISIONS						SHEET NO.
NO.	BY:	DATE:	NO.	BY:	DATE:	S-11
1			3			TOTAL SHEETS
2			4			22

ASSEMBLED BY : K. P. SEDAI	DATE : 8/15/16		
CHECKED BY : H. B. DESAI	DATE : 8/16/16		
DRAWN BY : MAA	6/10	REV. 11/14	MAA/TMG
CHECKED BY : MKT	7/10		

17-AUG-2016 14:00
R:\Structures\Plans\B5744_SMU_CS.dgn
jdhowk

STD. NO. 24PCS3_33_90S

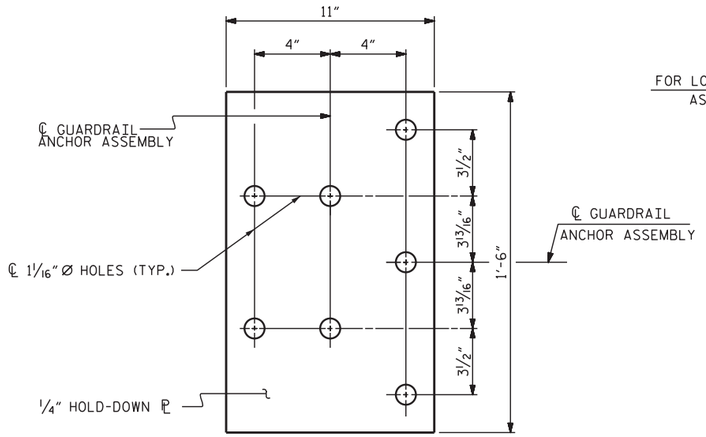

PLAN

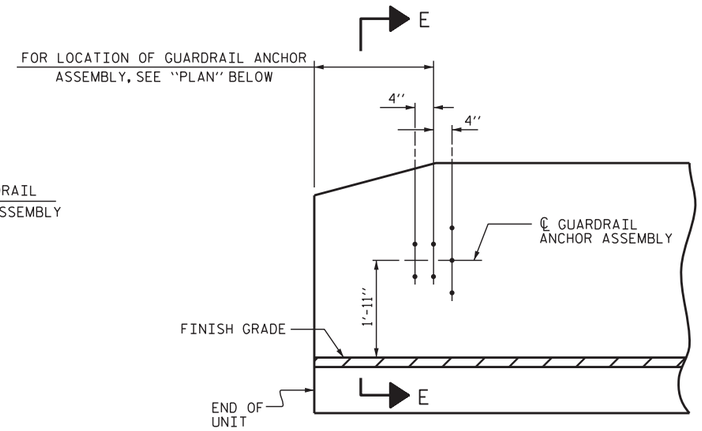

ELEVATION

NOTES

THE GUARDRAIL ANCHOR ASSEMBLY SHALL CONSIST OF A 1/4" HOLD DOWN PLATE AND 7 - 7/8" Ø BOLTS WITH NUTS AND WASHERS.

THE HOLD-DOWN PLATE SHALL CONFORM TO AASHTO M270 GRADE 36. AFTER FABRICATION, THE HOLD-DOWN PLATE SHALL BE HOT-DIP GALVANIZED IN ACCORDANCE WITH AASHTO M111.

BOLTS SHALL CONFORM TO THE REQUIREMENTS OF ASTM A307 AND NUTS SHALL CONFORM TO THE REQUIREMENTS OF AASHTO M291. BOLTS, NUTS AND WASHERS SHALL BE GALVANIZED. (AT THE CONTRACTOR'S OPTION, STAINLESS STEEL BOLTS, NUTS AND WASHERS MAY BE USED AS AN ALTERNATE FOR THE 7/8" Ø GALVANIZED BOLTS, NUTS AND WASHERS. THEY SHALL CONFORM TO OR EXCEED THE MECHANICAL REQUIREMENTS OF ASTM A307. THE USE OF THIS ALTERNATE SHALL BE APPROVED BY THE ENGINEER.)

THE GUARDRAIL ANCHOR ASSEMBLY IS REQUIRED AT ALL POINTS WHERE APPROACH GUARDRAIL IS TO BE ATTACHED TO THE END OF BARRIER RAIL. FOR POINTS OF ATTACHMENT, SEE SKETCH.

AFTER INSTALLATION, THE EXPOSED THREAD OF THE BOLT SHALL BE BURRED WITH A SHARP POINTED TOOL.

THE COST OF THE GUARDRAIL ANCHOR ASSEMBLY SHALL BE INCLUDED IN THE UNIT CONTRACT PRICE BID FOR VERTICAL CONCRETE BARRIER RAIL.

THE VERTICAL REINFORCING BARS MAY BE SHIFTED SLIGHTLY IN THE VERTICAL CONCRETE BARRIER RAIL TO CLEAR ASSEMBLY BOLTS.

THE 1 1/4" Ø HOLES SHALL BE FORMED OR DRILLED WITH A CORE BIT. IMPACT TOOLS WILL NOT BE PERMITTED. ANY CONCRETE DAMAGED BY THIS WORK SHALL BE REPAIRED TO THE SATISFACTION OF THE ENGINEER.

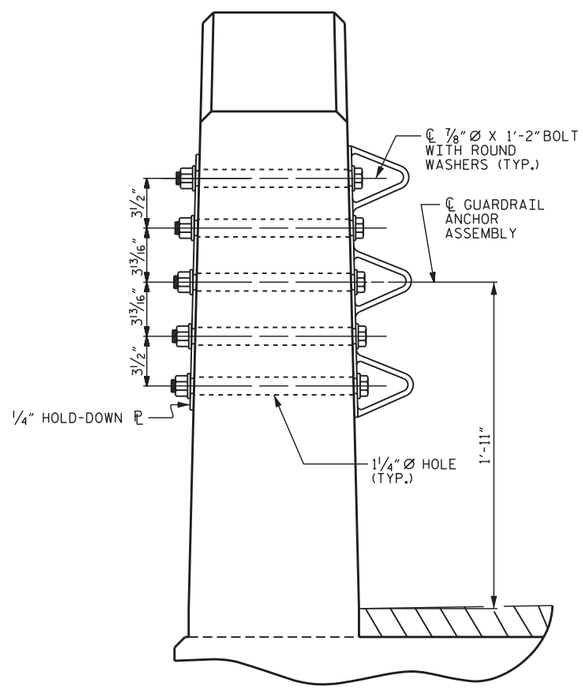

SECTION E-E

GUARDRAIL ANCHOR ASSEMBLY DETAILS

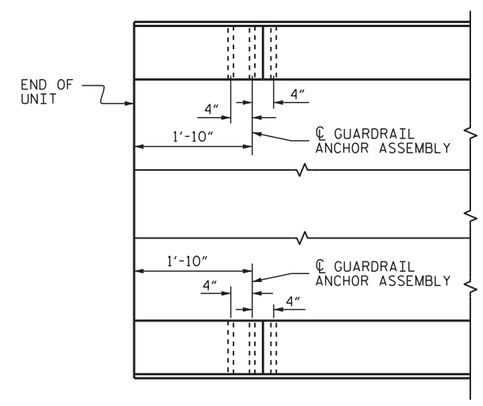

PLAN

LOCATION OF ANCHORS FOR GUARDRAIL

END BENT #1 SHOWN, END BENT #2 SIMILAR.

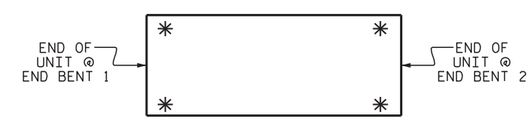

SKETCH SHOWING POINTS OF ATTACHMENT

✳ DENOTES GUARDRAIL ANCHOR ASSEMBLY

PROJECT NO. B-5744

SCOTLAND COUNTY

STATION: 15+55.00 -L-

NORTH CAROLINA PROFESSIONAL SEAL 031583 ENGINEER KRISHNA PRASAD SODAI

Docusigned by: Krishna P. Sodai
Act: DAEN2E1A0 / 8/23/2016

STATE OF NORTH CAROLINA
DEPARTMENT OF TRANSPORTATION
RALEIGH

STANDARD
GUARDRAIL ANCHORAGE DETAILS
FOR VERTICAL CONCRETE BARRIER RAIL

REVISIONS						SHEET NO.
NO.	BY:	DATE:	NO.	BY:	DATE:	S-12
1			3			TOTAL SHEETS
2			4			22

DOCUMENT NOT CONSIDERED FINAL UNLESS ALL SIGNATURES COMPLETED

ASSEMBLED BY : D.A. DAVENPORT	DATE : 5/13/16
CHECKED BY : H. B. DESAI	DATE : 8/3/16
DRAWN BY : MAA 5/10	REV. 12/5/11 MAA/GM
CHECKED BY : GM 5/10	REV. 6/13 MAA/GM
	REV. 1/15 MAA/TMG

17-AUG-2016 14:00
R:\Structures\Plans\B5744_SMU_GR.dgn
jdhawk

(SHT 1) STD. NO. GRA3

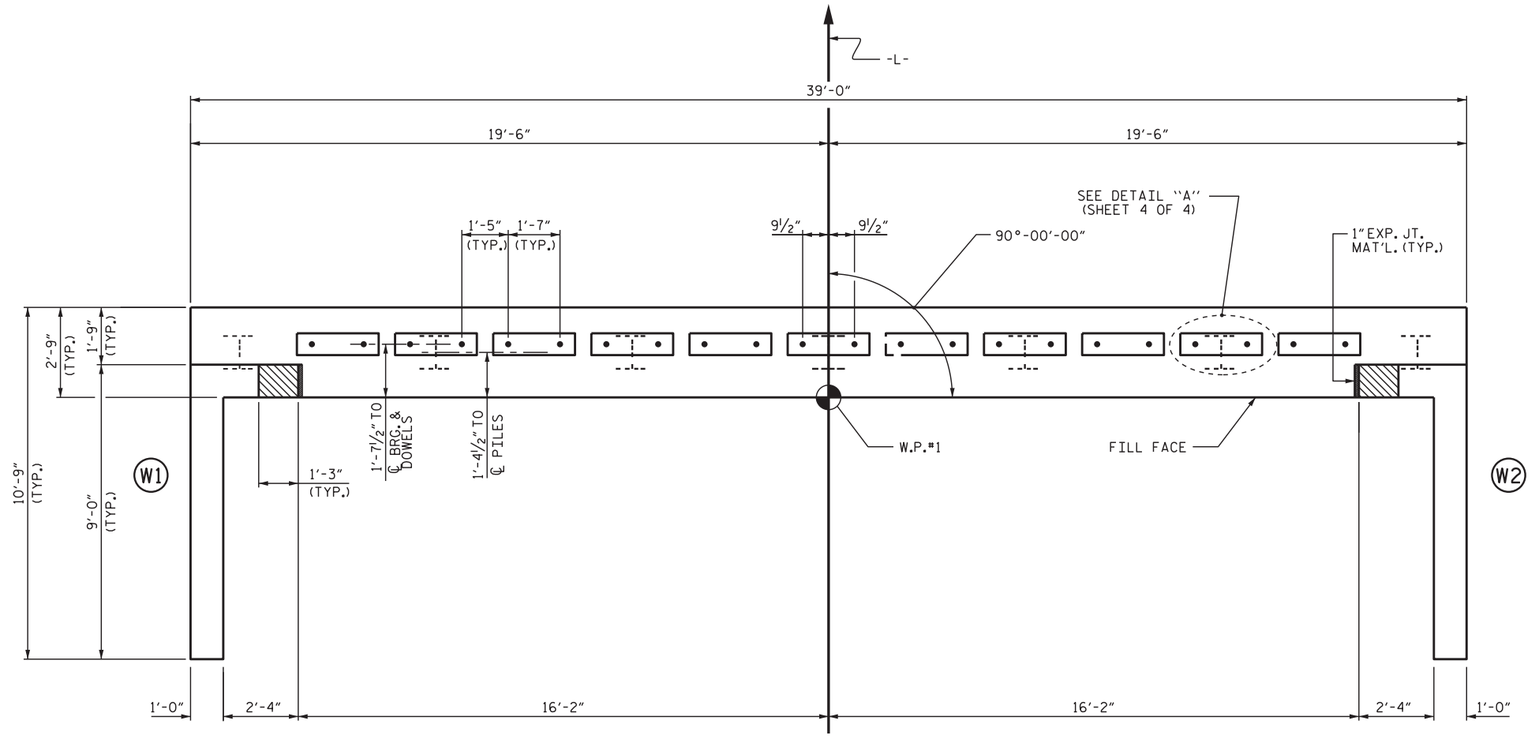

PLAN

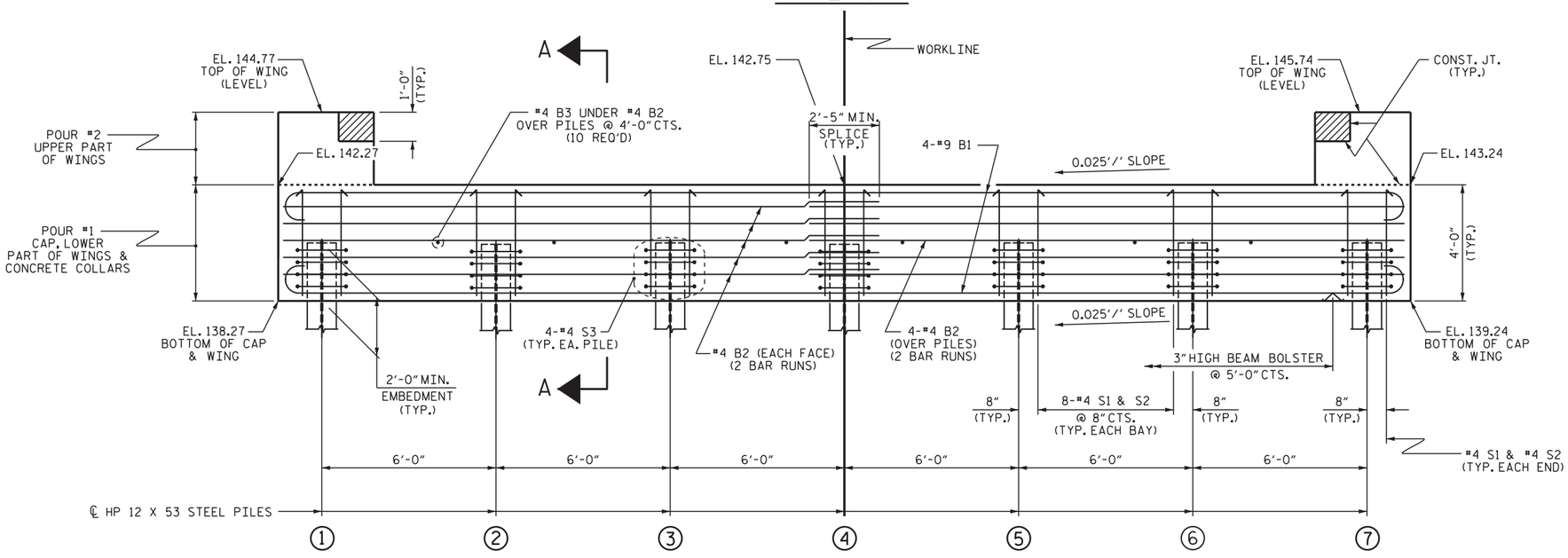

ELEVATION

WINGS NOT SHOWN FOR CLARITY.
FOR SECTION A-A, SEE SHEET 4 OF 4.
CONCRETE COLLARS FOR STEEL PILES NOT SHOWN IN PLAN AND ELEVATION VIEWS FOR CLARITY.
SEE "CORROSION PROTECTION FOR STEEL PILES DETAIL", SHEET 4 OF 4.

NOTES

STIRRUPS IN CAP MAY BE SHIFTED AS NECESSARY TO CLEAR DOWELS.

THE CONCRETE IN THE SHADED AREA OF THE WING SHALL BE POURED AFTER THE VERTICAL CONCRETE BARRIER RAIL IS CAST IF SLIP FORMING IS USED.

FOR PILE SPLICE DETAILS, SEE SHEET 4 OF 4.

FOR WING DETAILS, SEE SHEET 3 OF 4.

INSTALL THE 4" DIA. DRAIN PIPE THROUGH THE WING WALL AS REQUIRED FOR REINFORCED BRIDGE APPROACH FILLS, SEE THE ROADWAY PLANS. REINFORCING STEEL IN THE WING WALL MAY BE SHIFTED AS NECESSARY TO CLEAR THE DRAIN PIPE.

TOP OF PILE ELEVATIONS	
1	140.31
2	140.46
3	140.61
4	140.76
5	140.91
6	141.06
7	141.21

PROJECT NO. B-5744
SCOTLAND COUNTY
STATION: 15+55.00 -L-

SHEET 1 OF 4

STATE OF NORTH CAROLINA
DEPARTMENT OF TRANSPORTATION
RALEIGH

SUBSTRUCTURE

END BENT No. 1

NORTH CAROLINA PROFESSIONAL SEAL 031583 ENGINEER KRISHNA PRASAD DESAI

Digitally signed by Krishna P. Desai
Date: 2016.08.29 08:45:45 -04'00'
8/29/2016

ASSEMBLED BY : D.A. DAVENPORT	DATE : 5/13/16
CHECKED BY : H. B. DESAI	DATE : 8/3/16
DRAWN BY : WJH 12/11	REV. 4/15 MAA/TMG
CHECKED BY : AAC 12/11	

DOCUMENT NOT CONSIDERED FINAL UNLESS ALL SIGNATURES COMPLETED

REVISIONS						SHEET NO.
NO.	BY:	DATE:	NO.	BY:	DATE:	S-13
1			3			TOTAL SHEETS
2			4			22

17-AUG-2016 14:00
R:\Structures\Plans\B5744_SMU_EBT.dgn
jdhawk

STD. NO. EB_33_90S4

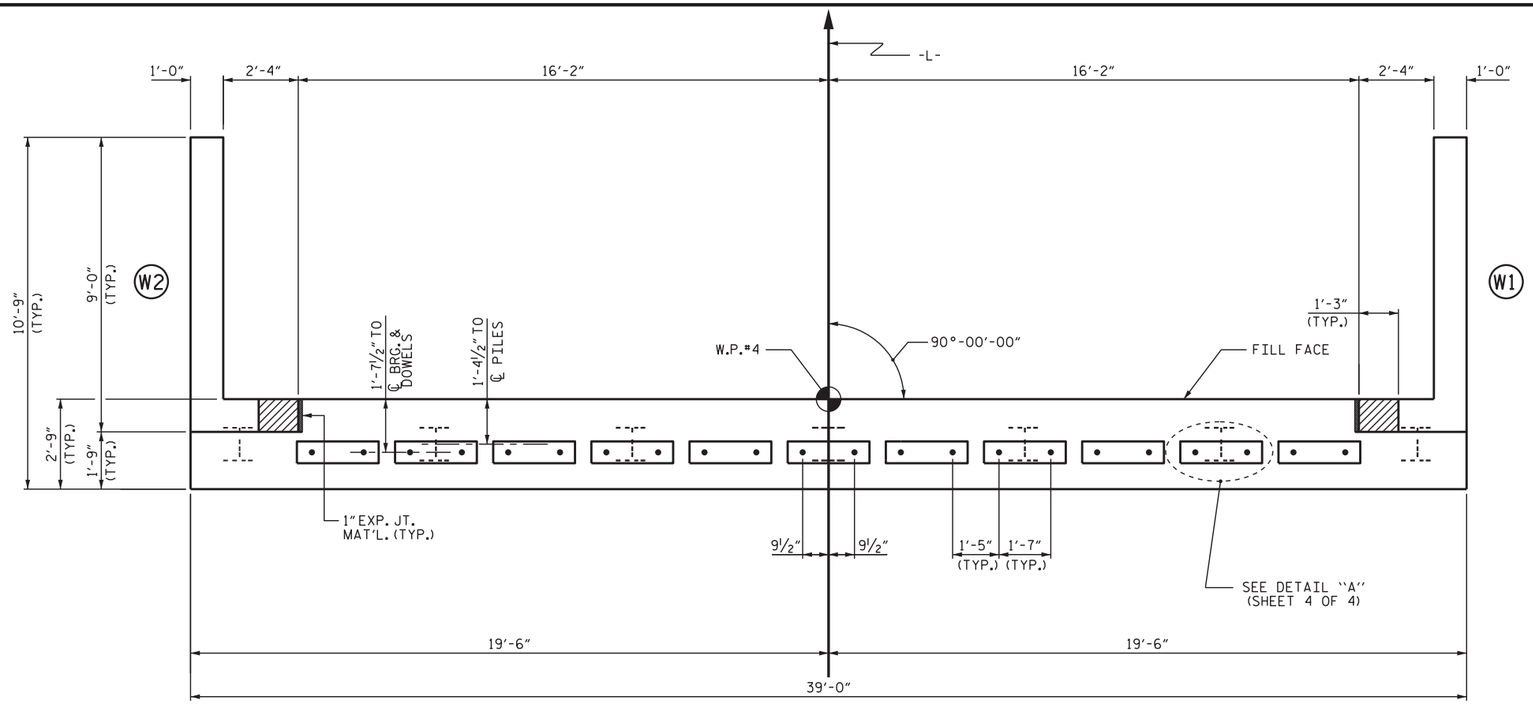

PLAN

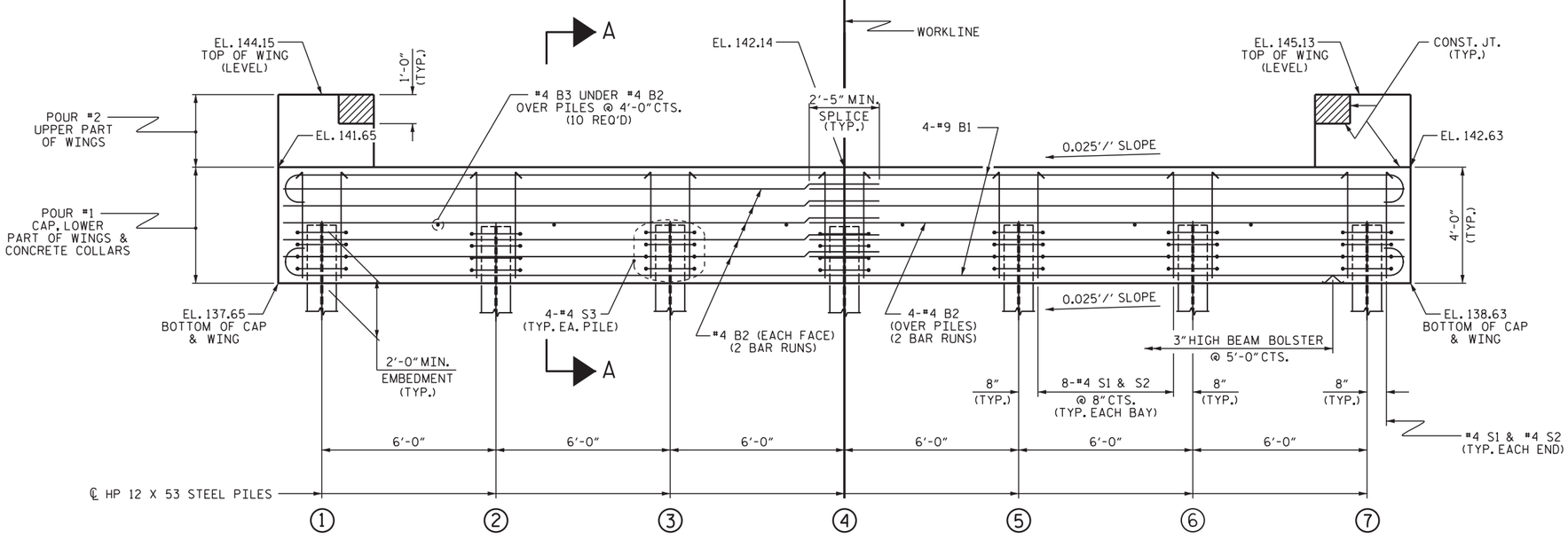

ELEVATION

WINGS NOT SHOWN FOR CLARITY.
FOR SECTION A-A, SEE SHEET 4 OF 4.
CONCRETE COLLARS FOR STEEL PILES NOT SHOWN IN PLAN AND ELEVATION VIEWS FOR CLARITY.
SEE "CORROSION PROTECTION FOR STEEL PILES DETAIL", SHEET 4 OF 4.

NOTES

STIRRUPS IN CAP MAY BE SHIFTED AS NECESSARY TO CLEAR DOWELS.

THE CONCRETE IN THE SHADED AREA OF THE WING SHALL BE POURED AFTER THE VERTICAL CONCRETE BARRIER RAIL IS CAST IF SLIP FORMING IS USED.

FOR PILE SPLICE DETAILS, SEE SHEET 4 OF 4.

FOR WING DETAILS, SEE SHEET 3 OF 4.

INSTALL THE 4" DIA. DRAIN PIPE THROUGH THE WING WALL AS REQUIRED FOR REINFORCED BRIDGE APPROACH FILLS, SEE THE ROADWAY PLANS. REINFORCING STEEL IN THE WING WALL MAY BE SHIFTED AS NECESSARY TO CLEAR THE DRAIN PIPE.

TOP OF PILE ELEVATIONS	
1	139.70
2	139.85
3	140.00
4	140.15
5	140.30
6	140.45
7	140.60

PROJECT NO. B-5744
SCOTLAND COUNTY
STATION: 15+55.00 -L-

SHEET 2 OF 4

STATE OF NORTH CAROLINA
DEPARTMENT OF TRANSPORTATION
RALEIGH

SUBSTRUCTURE

END BENT No. 2

NORTH CAROLINA PROFESSIONAL SEAL 031583 ENGINEER KRISHNA PRASAD SEDAI

Documents not to be signed by: Krishna P. Sedai
Act/24 NCAC 36 H .0810 8/29/2016

DOCUMENT NOT CONSIDERED FINAL UNLESS ALL SIGNATURES COMPLETED

REVISIONS						SHEET NO.
NO.	BY:	DATE:	NO.	BY:	DATE:	S-14
1			3			TOTAL SHEETS
2			4			22

ASSEMBLED BY : D.A. DAVENPORT DATE : 5/13/16
CHECKED BY : H. B. DESAI DATE : 8/3/16

DRAWN BY : WJH 12/11
CHECKED BY : AAC 12/11
REV. 4/15 MAA/TMG

17-AUG-2016 14:00
R:\Structures\Plans\B5744_SMU_EBT.dgn
jdhawk

STD. NO. EB_33_90S4

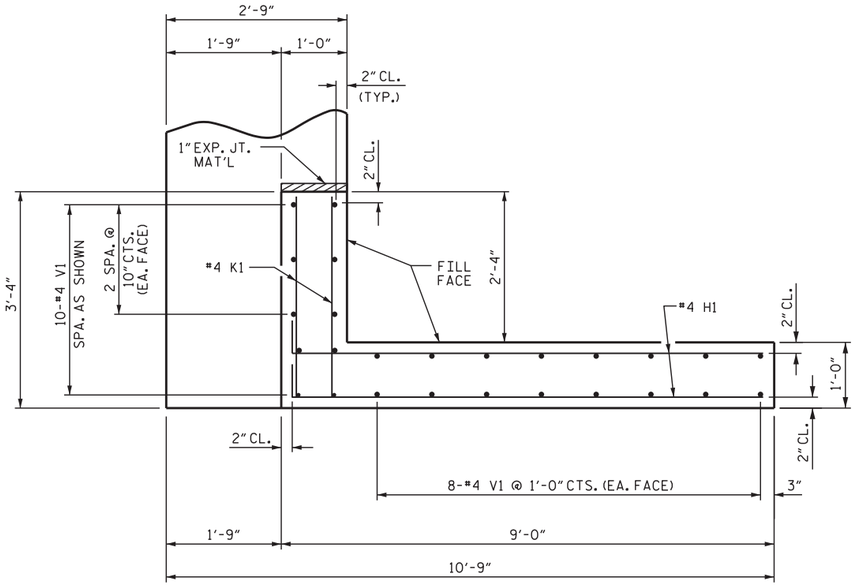

PLAN OF WING (W1)

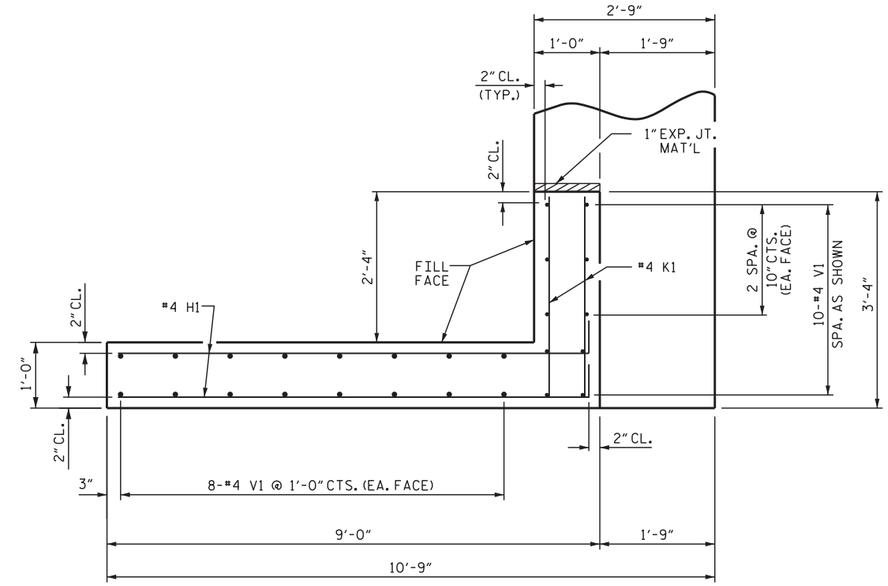

PLAN OF WING (W2)

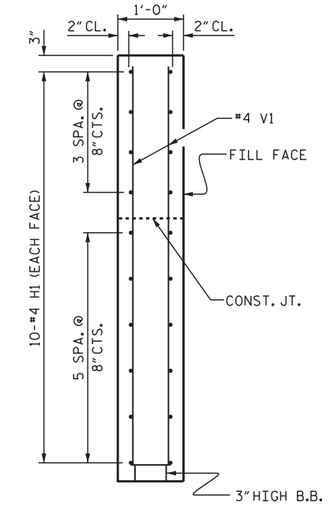

SECTION X-X

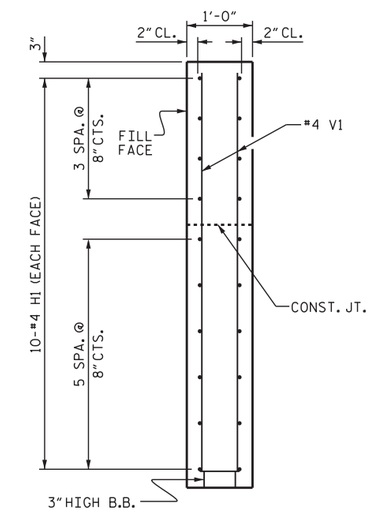

SECTION Y-Y

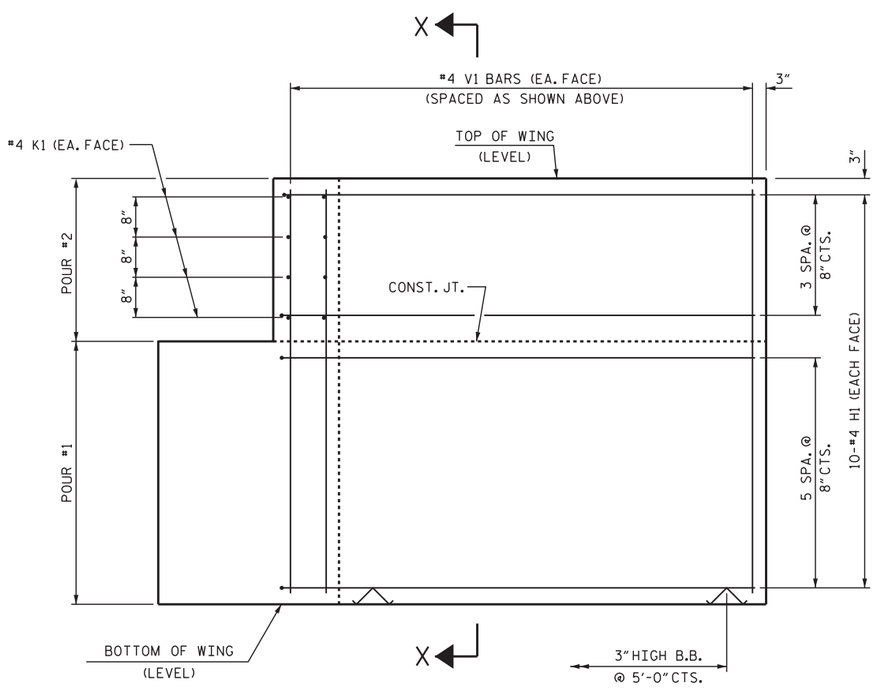

ELEVATION OF WING (W1)

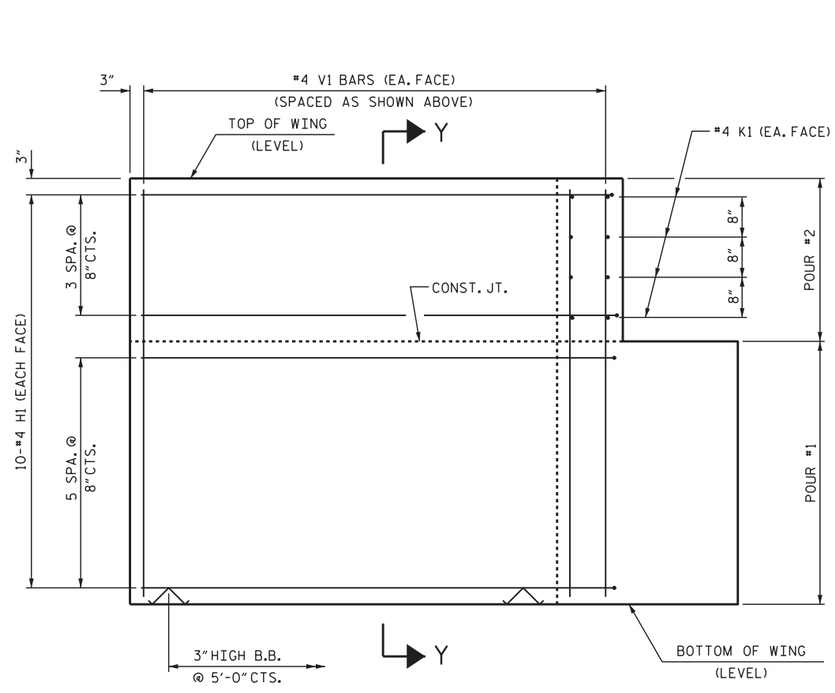

ELEVATION OF WING (W2)

WING DETAILS

PROJECT NO. B-5744

SCOTLAND COUNTY

STATION: 15+55.00 -L-

SHEET 3 OF 4

STATE OF NORTH CAROLINA
DEPARTMENT OF TRANSPORTATION
RALEIGH

SUBSTRUCTURE

END BENT
WING DETAILS

NORTH CAROLINA PROFESSIONAL SEAL 031583 ENGINEER KRISHNA PRASAD DESAI

Documents not to be signed by: Krishna P. Desai
Act: 34 Hr 28 Min 41 Sec 8/29/2016

DOCUMENT NOT CONSIDERED FINAL UNLESS ALL SIGNATURES COMPLETED

REVISIONS							
NO.	BY:	DATE:	NO.	BY:	DATE:	SHEET NO.	S-15
1			3			TOTAL SHEETS	22
2			4				

ASSEMBLED BY : D.A. DAVENPORT	DATE : 5/13/16
CHECKED BY : H. B. DESAI	DATE : 8/3/16
DRAWN BY : WJH 12/11	REV. 4/15 MAA/TMG
CHECKED BY : AAC 12/11	

17-AUG-2016 14:00
R:\Structures\Plans\B5744_SMU_EBT.dgn
jchawk

STD. NO. EB_33_90S4

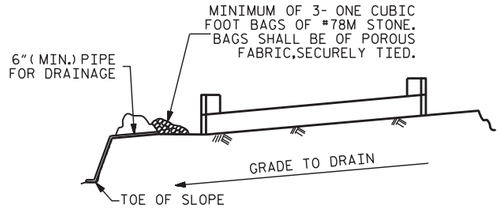

BAGGED STONE AND PIPE SHALL BE PLACED IMMEDIATELY AFTER COMPLETION OF END BENT EXCAVATION. PIPE MAY BE EITHER CONCRETE, CORRUGATED STEEL, CORRUGATED ALUMINUM ALLOY, OR CORRUGATED PLASTIC. PERFORATED PIPE WILL NOT BE ALLOWED.

BAGGED STONE SHALL REMAIN IN PLACE UNTIL THE ENGINEER DIRECTS THAT IT BE REMOVED. THE CONTRACTOR SHALL REMOVE AND DISPOSE OF SILT ACCUMULATIONS AT BAGGED STONE WHEN SO DIRECTED BY THE ENGINEER. BAGS SHALL BE REMOVED AND REPLACED WHENEVER THE ENGINEER DETERMINES THAT THEY HAVE DETERIORATED AND LOST THEIR EFFECTIVENESS.

NO SEPARATE PAYMENT WILL BE MADE FOR THIS WORK AND THE ENTIRE COST OF THIS WORK SHALL BE INCLUDED IN THE UNIT CONTRACT PRICE BID FOR THE SEVERAL PAY ITEMS.

TEMPORARY DRAINAGE AT END BENT

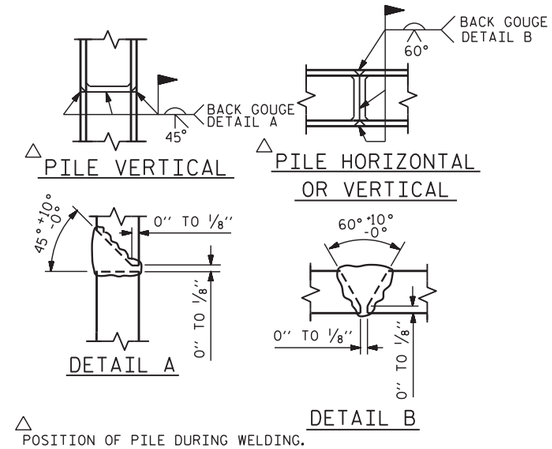

△ POSITION OF PILE DURING WELDING.

PILE SPLICE DETAILS

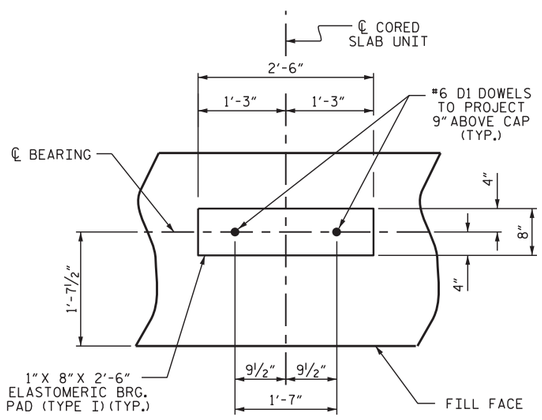

DETAIL "A"

(END BENT No. 1 SHOWN, END BENT No. 2 SIMILAR BY ROTATION)

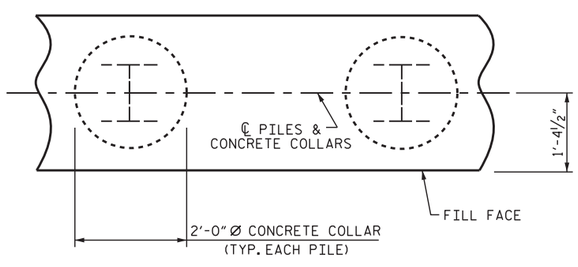

PLAN

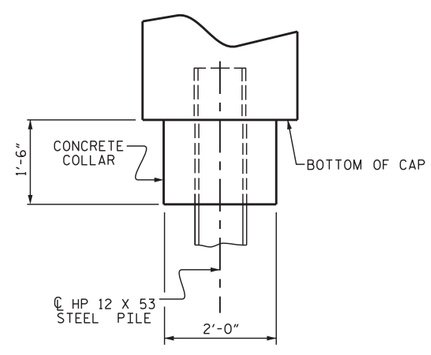

ELEVATION

CORROSION PROTECTION FOR STEEL PILES DETAIL

(END BENT No. 1 SHOWN, END BENT No. 2 SIMILAR BY ROTATION)

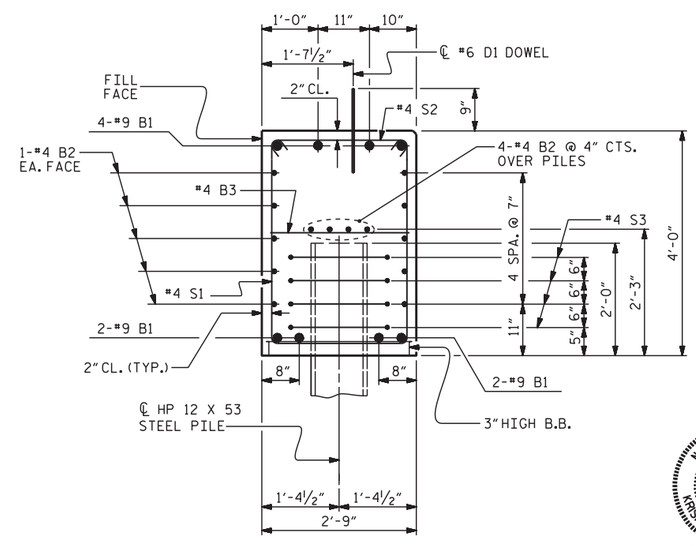

SECTION A-A

(CONCRETE COLLAR NOT SHOWN FOR CLARITY. SEE "CORROSION PROTECTION FOR STEEL PILES DETAIL.")

BAR TYPES

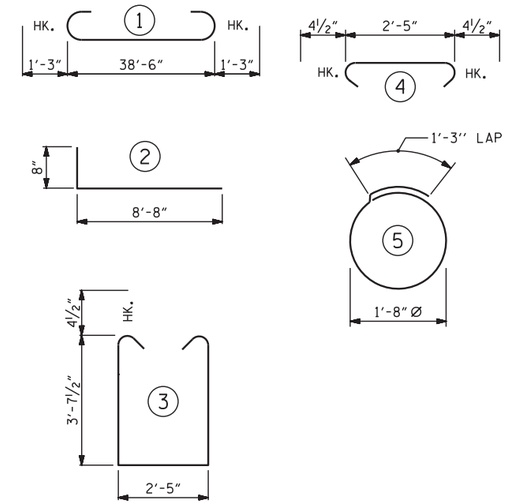

ALL BAR DIMENSIONS ARE OUT TO OUT.

END BENT No. 1	END BENT No. 2
HP 12 X 53 STEEL PILES	HP 12 X 53 STEEL PILES
NO: 7 LIN. FT.= 350	NO: 7 LIN. FT.= 315
PILE REDRIVES EA. 7	PILE REDRIVES EA. 7

BILL OF MATERIAL FOR ONE END BENT

BAR	NO.	SIZE	TYPE	LENGTH	WEIGHT
B1	8	#9	1	41'-0"	1115
B2	28	#4	STR	20'-7"	385
B3	10	#4	STR	2'-5"	16
D1	22	#6	STR	1'-6"	50
H1	40	#4	2	9'-4"	249
K1	16	#4	STR	2'-11"	31
S1	50	#4	3	10'-5"	348
S2	50	#4	4	3'-2"	106
S3	28	#4	5	6'-6"	122
V1	52	#4	STR	6'-2"	214

REINFORCING STEEL (FOR ONE END BENT) 2636 LBS.

CLASS A CONCRETE BREAKDOWN (FOR ONE END BENT)

POUR #1 CAP, LOWER PART OF WINGS & COLLARS 19.5 C.Y.

POUR #2 UPPER PART OF WINGS 2.1 C.Y.

TOTAL CLASS A CONCRETE 21.6 C.Y.

PROJECT NO. B-5744
SCOTLAND COUNTY
STATION: 15+55.00 -L-

SHEET 4 OF 4

STATE OF NORTH CAROLINA
DEPARTMENT OF TRANSPORTATION
RALEIGH

SUBSTRUCTURE

END BENT No. 1 & 2 DETAILS

NORTH CAROLINA PROFESSIONAL SEAL 031583 ENGINEER KRISHNA PRASAD SEDAI

Docusigned by: Krishna P. Sedai
Act/24EN2E1B1... 8/29/2016

DOCUMENT NOT CONSIDERED FINAL UNLESS ALL SIGNATURES COMPLETED

REVISIONS						
NO.	BY:	DATE:	NO.	BY:	DATE:	
1			3			
2			4			

SHEET NO. S-16
TOTAL SHEETS 22

ASSEMBLED BY : D.A. DAVENPORT	DATE : 5/25/16
CHECKED BY : H. B. DESAI	DATE : 8/3/16
DRAWN BY : WJH 12/11	
CHECKED BY : AAC 12/11	

17-AUG-2016 14:00
R:\Structures\Plans\B5744_SMU_EBT.dgn
jdhawk

STD. NO. EB_33_90S4

NOTES

STIRRUPS IN CAP MAY BE SHIFTED AS NECESSARY TO CLEAR DOWELS.

★ INVERT ALTERNATE STIRRUPS.

GALVANIZE THE TOP OF EACH INTERIOR BENT PILE A MINIMUM OF 27 FEET. GALVANIZE IN ACCORDANCE WITH SECTION 1076 OF THE STANDARD SPECIFICATIONS.

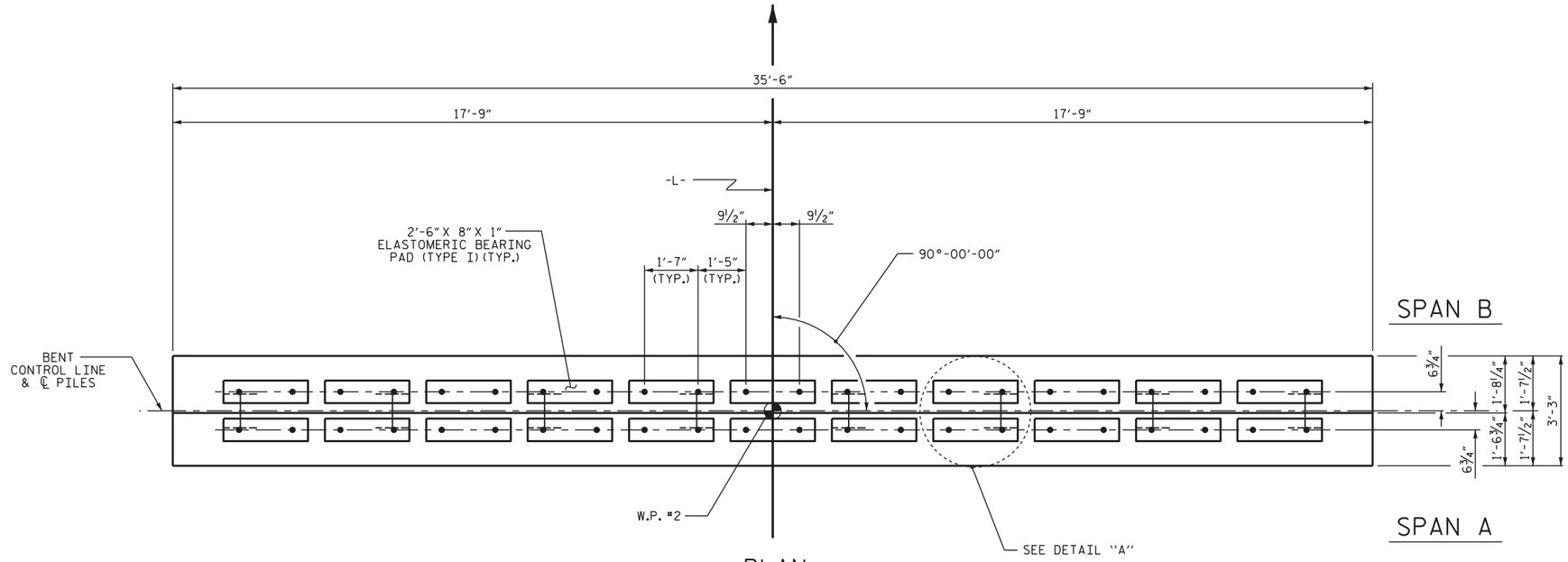

PLAN

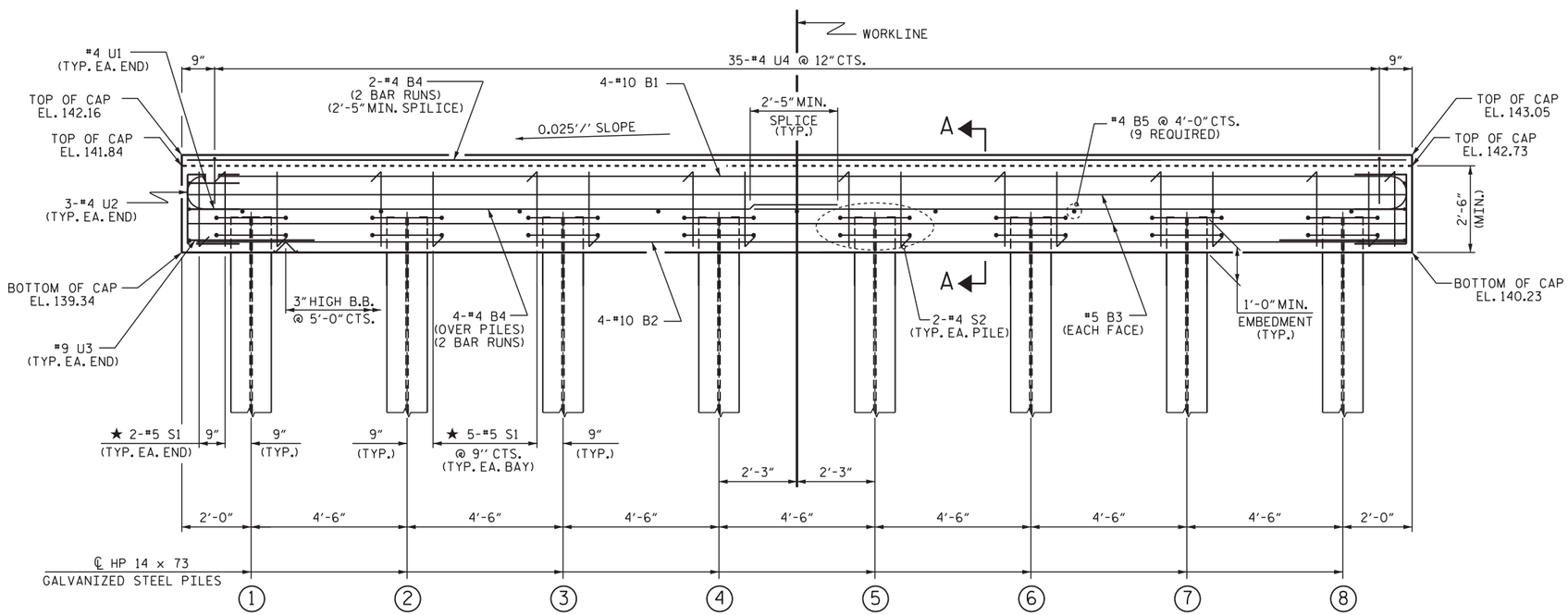

ELEVATION

FOR SECTION A-A, SEE SHEET 2 OF 2

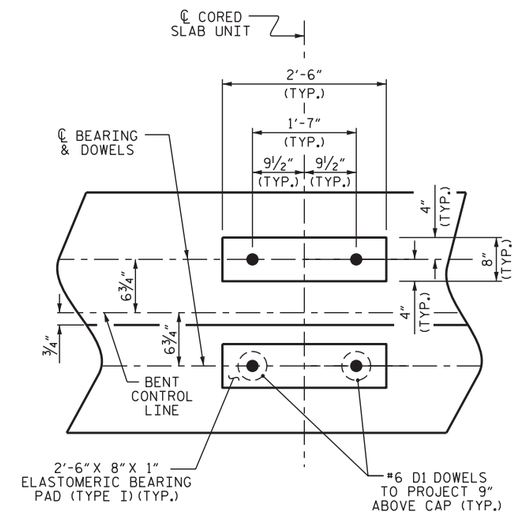

DETAIL "A"

(DIMENSIONS ARE TYPICAL EACH BEARING)

TOP OF PILE ELEVATIONS	
1	140.41
2	140.52
3	140.63
4	140.74
5	140.86
6	140.97
7	141.08
8	141.19

PROJECT NO. B-5744

SCOTLAND COUNTY

STATION: 15+55.00-L-

SHEET 1 OF 2

STATE OF NORTH CAROLINA
DEPARTMENT OF TRANSPORTATION
RALEIGH

SUBSTRUCTURE

BENT No. 1

NORTH CAROLINA PROFESSIONAL SEAL 031583 ENGINEER KRISHNA PRASAD SEDAI

Docusigned by: Krishna P. Sedai
8/29/2016

DOCUMENT NOT CONSIDERED FINAL UNLESS ALL SIGNATURES COMPLETED

REVISIONS								SHEET NO.
NO.	BY:	DATE:	NO.	BY:	DATE:			S-17
1			3					TOTAL SHEETS
2			4					22

ASSEMBLED BY : D.A. DAVENPORT	DATE : 6/3/16
CHECKED BY : H. B. DESAI	DATE : 8/3/16
DRAWN BY : DGE 05/10	REV. 11/14 MAA/TMG
CHECKED BY : MKT 05/10	

17-AUG-2016 14:00
R:\Structures\Plans\B5744_SMU_BT.dgn
jdhawk

STD. NO. 14" HP_BT_33_90S_<60'

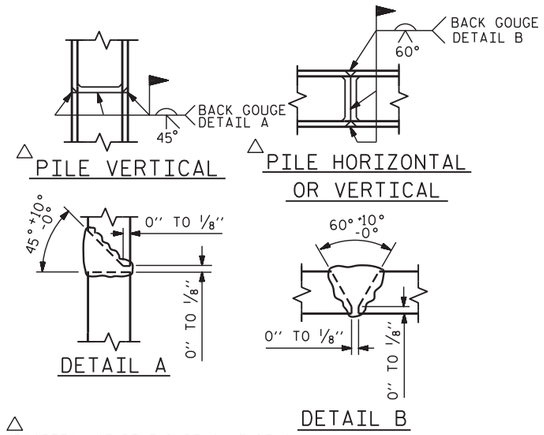

△ POSITION OF PILE DURING WELDING.

PILE SPLICE DETAILS

BAR TYPES

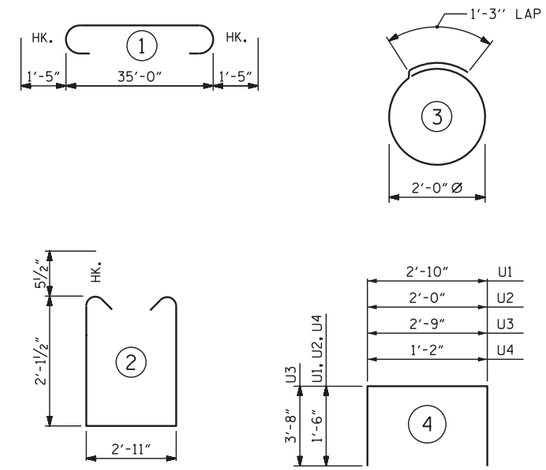

ALL BAR DIMENSIONS ARE OUT TO OUT.

BILL OF MATERIAL
FOR ONE BENT

BAR	NO.	SIZE	TYPE	LENGTH	WEIGHT
B1	4	#10	1	37'-10"	651
B2	4	#10	STR	35'-2"	605
B3	4	#5	STR	35'-2"	147
B4	12	#4	STR	18'-10"	151
B5	9	#4	STR	2'-11"	18
D1	44	#6	STR	1'-6"	99
S1	39	#5	2	8'-1"	329
S2	16	#4	3	7'-7"	81
U1	4	#4	4	5'-10"	16
U2	6	#4	4	5'-0"	20
U3	2	#9	4	10'-1"	69
U4	35	#4	4	4'-2"	97

REINFORCING STEEL (FOR ONE BENT) 2,283 LBS

CLASS A CONCRETE BREAKDOWN (FOR ONE BENT)

TOTAL CLASS A CONCRETE 11.3 C.Y.

HP 14 X 73 GALVANIZED STEEL PILES (FOR ONE BENT)

No. 8 LIN. FT. 520

PILE REDRIVES EA. 8

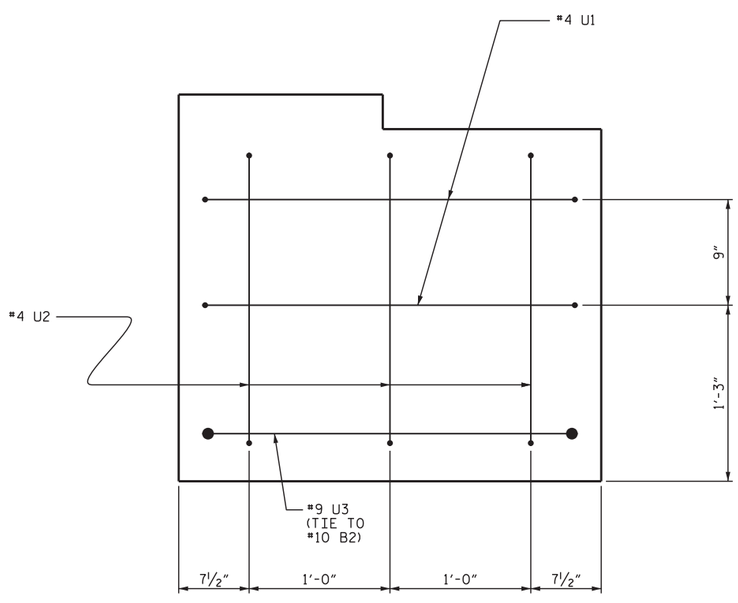

END OF CAP VIEW
(SIMILAR BOTH ENDS)

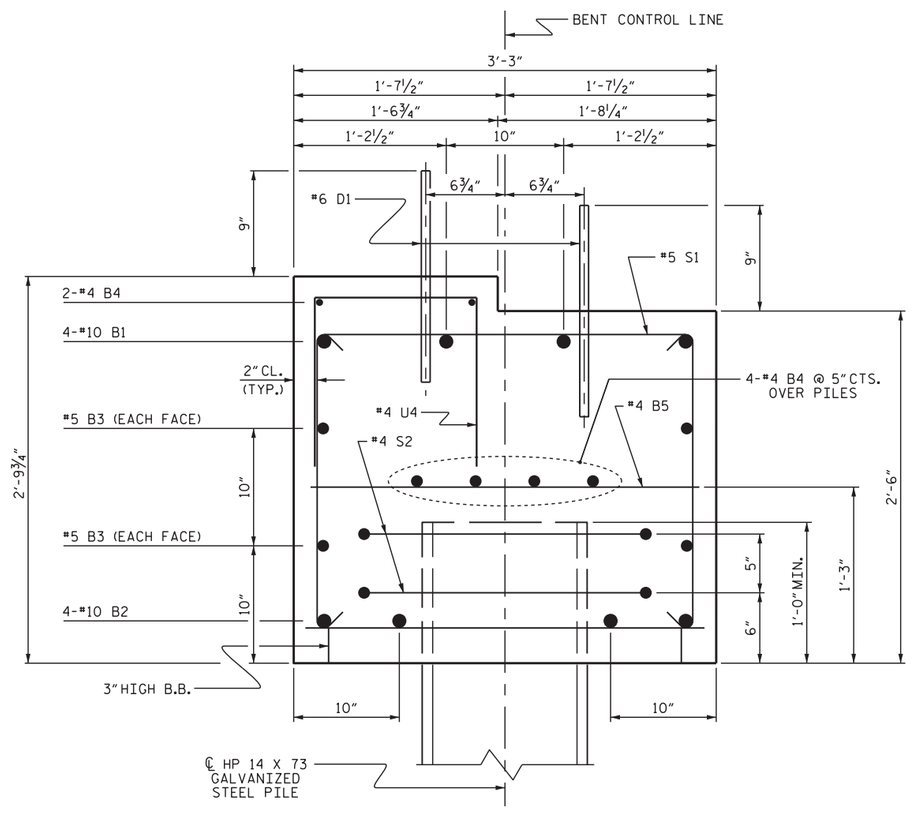

SECTION A-A

PROJECT NO. B-5744
SCOTLAND COUNTY
STATION: 15+55.00-L-

SHEET 2 OF 2

STATE OF NORTH CAROLINA
DEPARTMENT OF TRANSPORTATION
RALEIGH

SUBSTRUCTURE

BENT No. 1

NORTH CAROLINA PROFESSIONAL SEAL 031583 ENGINEER KRISHNA PRASAD SEDAI

Digitally signed by Krishna P. Sedai
Date: 2016.08.29 08:49:15 -04'00'
8/29/2016

DOCUMENT NOT CONSIDERED FINAL UNLESS ALL SIGNATURES COMPLETED

REVISIONS							
NO.	BY:	DATE:	NO.	BY:	DATE:	SHEET NO.	S-18
1			3			TOTAL SHEETS	22
2			4				

DRAWN BY :	D.A. DAVENPORT	DATE :	6/3/16
CHECKED BY :	H. B. DESAI	DATE :	8/3/16
DRAWN BY :	DGE 05/10	REV. 11/14	MAA/TMG
CHECKED BY :	MKT 05/10		

17-AUG-2016 14:00
R:\Structures\Plans\B5744_SMU_BT.dgn
jdnawk

STD. NO. 14" HP_BT_33_90S_<60'

NOTES

STIRRUPS IN CAP MAY BE SHIFTED AS NECESSARY TO CLEAR DOWELS.

★ INVERT ALTERNATE STIRRUPS.

GALVANIZE THE TOP OF EACH INTERIOR BENT PILE A MINIMUM OF 25 FEET. GALVANIZE IN ACCORDANCE WITH SECTION 1076 OF THE STANDARD SPECIFICATIONS.

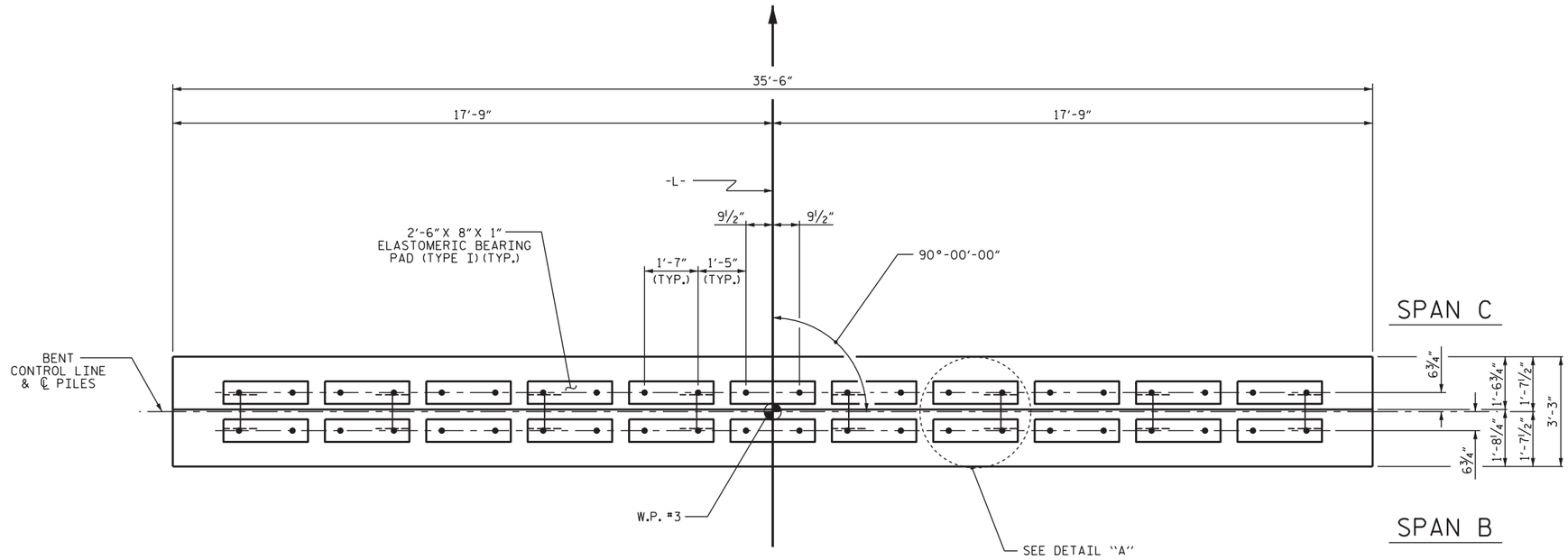

PLAN

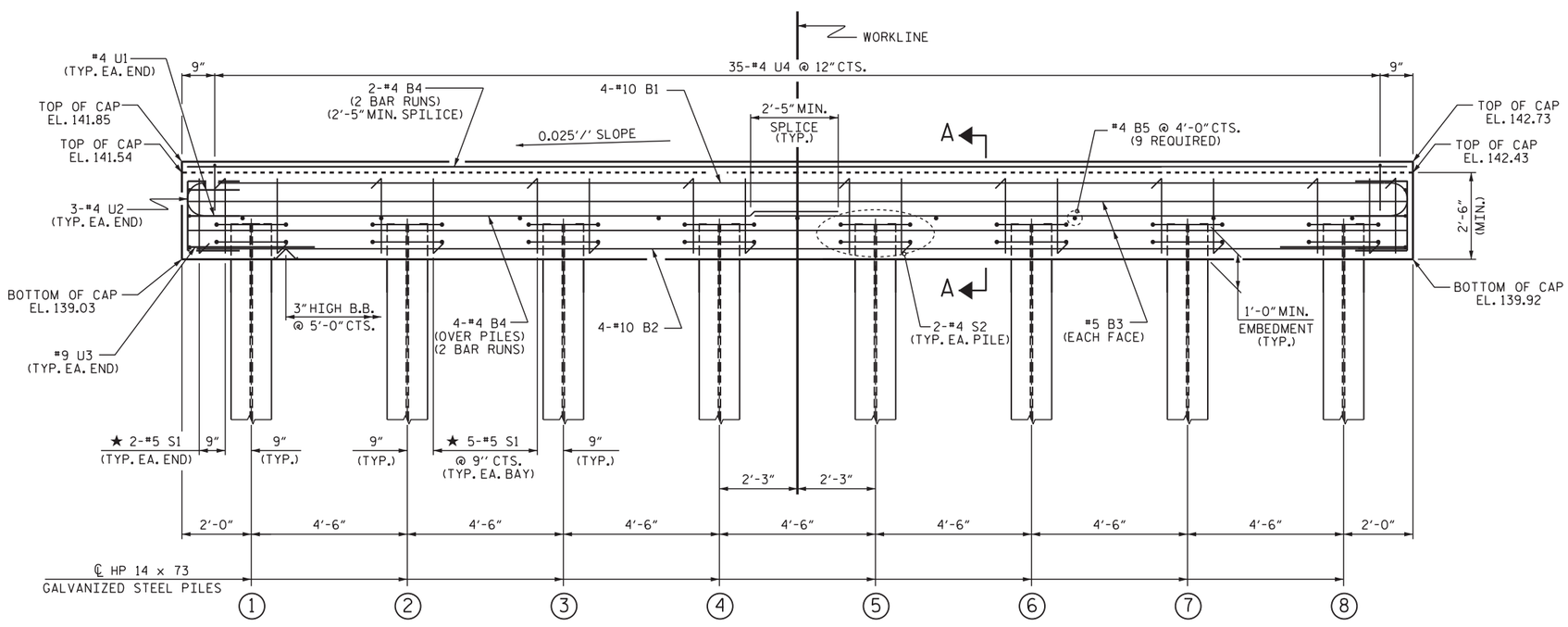

ELEVATION

FOR SECTION A-A, SEE SHEET 2 OF 2

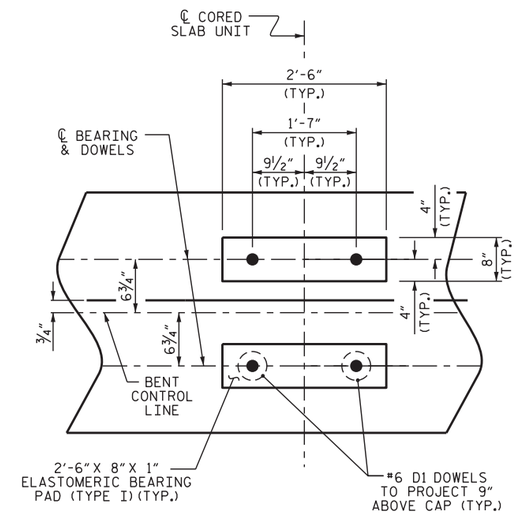

DETAIL "A"

(DIMENSIONS ARE TYPICAL EACH BEARING)

TOP OF PILE ELEVATIONS	
1	140.10
2	140.21
3	140.32
4	140.44
5	140.55
6	140.66
7	140.77
8	140.89

PROJECT NO. B-5744

SCOTLAND COUNTY

STATION: 15+55.00-L-

SHEET 1 OF 2

NORTH CAROLINA PROFESSIONAL SEAL 031583 ENGINEER KRISHNA PRASAD SEDAI

DocuSigned by: Krishna P. Sedai
8/29/2016

STATE OF NORTH CAROLINA
DEPARTMENT OF TRANSPORTATION
RALEIGH

SUBSTRUCTURE

BENT No. 2

DOCUMENT NOT CONSIDERED FINAL UNLESS ALL SIGNATURES COMPLETED

REVISIONS								SHEET NO.
NO.	BY:	DATE:	NO.	BY:	DATE:			S-19
1			3					TOTAL SHEETS
2			4					22

ASSEMBLED BY : D.A. DAVENPORT	DATE : 6/3/16
CHECKED BY : H. B. DESAI	DATE : 8/3/16
DRAWN BY : DGE 05/10	REV. 11/14 MAA/TMG
CHECKED BY : MKT 05/10	

17-AUG-2016 14:00
R:\Structures\Plans\B5744_SMU_BT.dgn
jdhawk

STD. NO. 14" HP_BT_33_90S_<60'

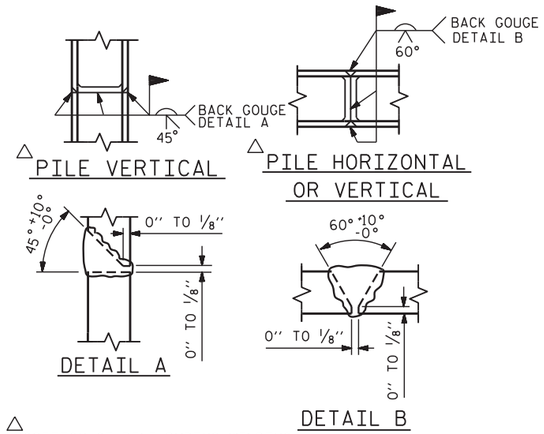

△ POSITION OF PILE DURING WELDING.

PILE SPLICE DETAILS

BAR TYPES

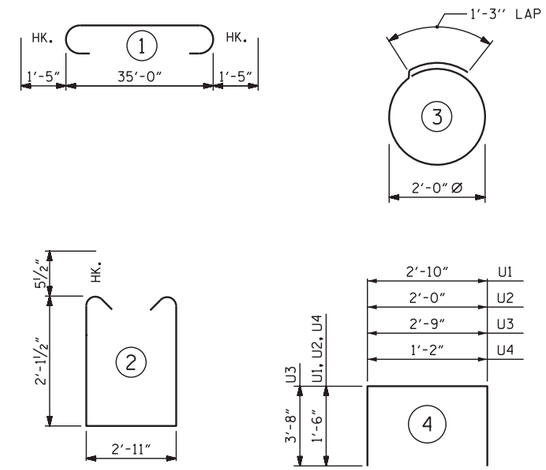

ALL BAR DIMENSIONS ARE OUT TO OUT.

BILL OF MATERIAL
FOR ONE BENT

BAR	NO.	SIZE	TYPE	LENGTH	WEIGHT
B1	4	#10	1	37'-10"	651
B2	4	#10	STR	35'-2"	605
B3	4	#5	STR	35'-2"	147
B4	12	#4	STR	18'-10"	151
B5	9	#4	STR	2'-11"	18
D1	44	#6	STR	1'-6"	99
S1	39	#5	2	8'-1"	329
S2	16	#4	3	7'-7"	81
U1	4	#4	4	5'-10"	16
U2	6	#4	4	5'-0"	20
U3	2	#9	4	10'-1"	69
U4	35	#4	4	4'-2"	97

REINFORCING STEEL (FOR ONE BENT) 2,283 LBS

CLASS A CONCRETE BREAKDOWN (FOR ONE BENT)

TOTAL CLASS A CONCRETE 11.3 C.Y.

HP 14 X 73 GALVANIZED STEEL PILES (FOR ONE BENT)

No. 8 LIN. FT. 480

PILE REDRIVES EA. 8

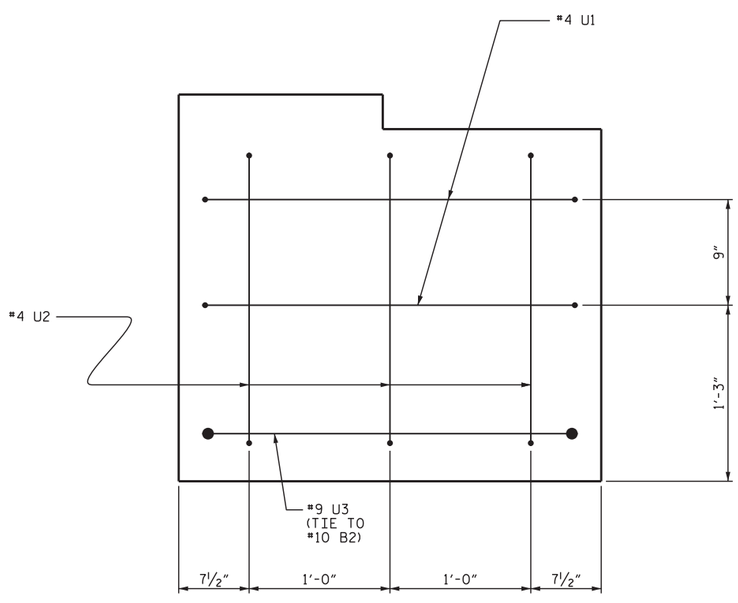

END OF CAP VIEW
(SIMILAR BOTH ENDS)

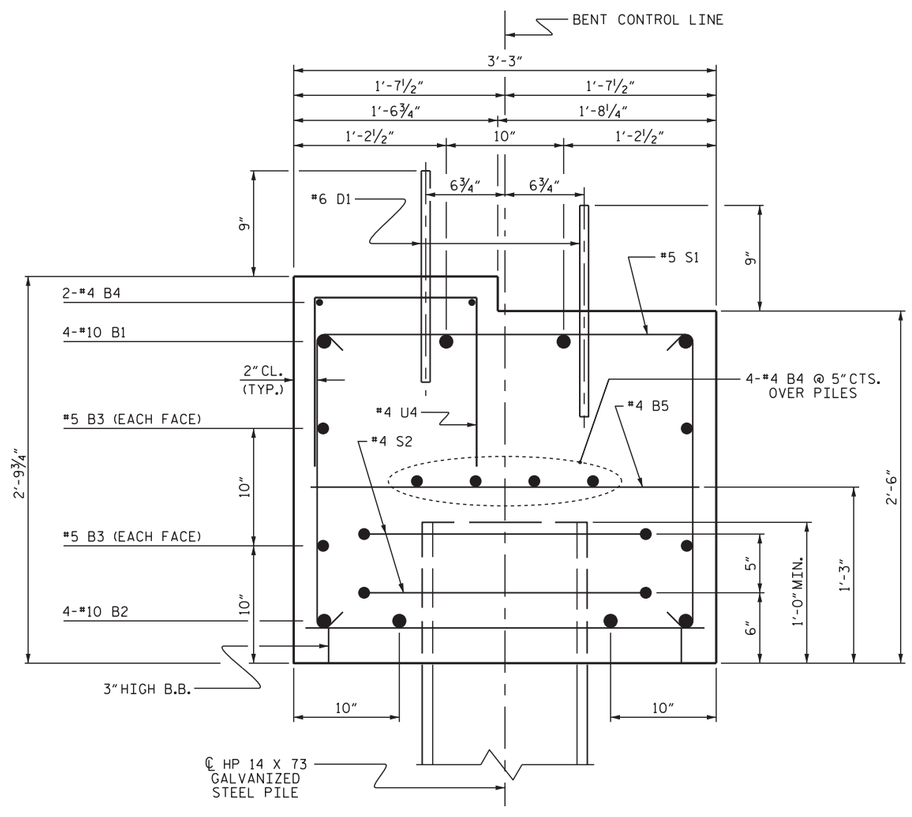

SECTION A-A

PROJECT NO. B-5744
SCOTLAND COUNTY
STATION: 15+55.00-L-

SHEET 2 OF 2

STATE OF NORTH CAROLINA
DEPARTMENT OF TRANSPORTATION
RALEIGH

SUBSTRUCTURE

BENT No. 2

NORTH CAROLINA PROFESSIONAL SEAL 031583 ENGINEER KRISHNA PRASAD SEDAI

Digitally signed by Krishna P. Sedai
Date: 2016.08.19 11:08:41 -04'00'
8/29/2016

DOCUMENT NOT CONSIDERED FINAL UNLESS ALL SIGNATURES COMPLETED

REVISIONS							
NO.	BY:	DATE:	NO.	BY:	DATE:	SHEET NO.	S-20
1			3			TOTAL SHEETS	22
2			4				

DRAWN BY :	D.A. DAVENPORT	DATE :	6/3/16
CHECKED BY :	H. B. DESAI	DATE :	8/3/16
DRAWN BY :	DGE 05/10	REV. 11/14	MAA/TMG
CHECKED BY :	MKT 05/10		

17-AUG-2016 14:00
R:\Structures\Plans\B5744_SMU_BT.dgn
jdnawk

STD. NO. 14" HP_BT_33_90S_<60'

NOTES :

FOR BERM WIDTH DIMENSIONS, SEE GENERAL DRAWING.

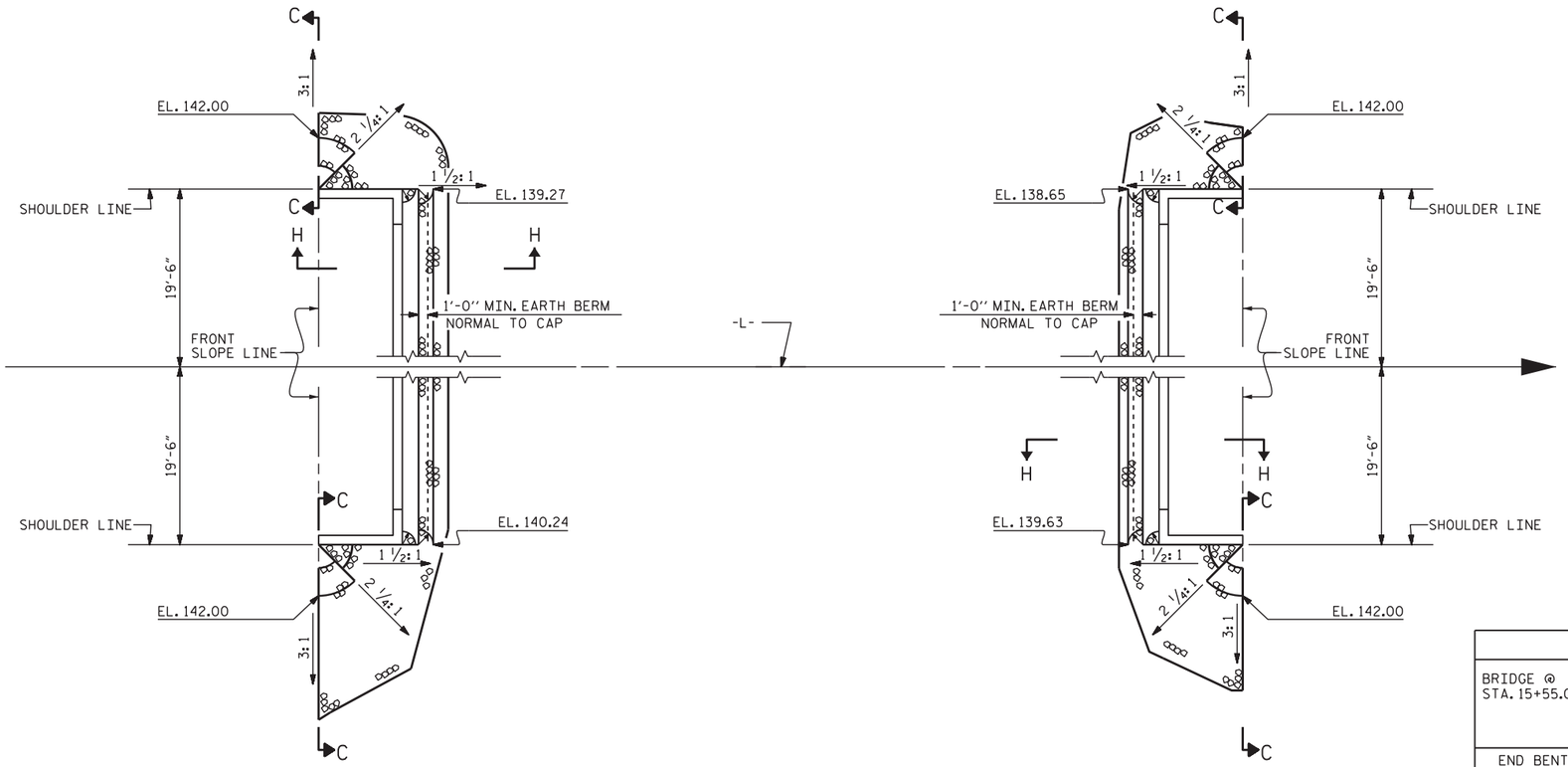

END BENT 1

END BENT 2

PLAN

ESTIMATED QUANTITIES		
BRIDGE @ STA. 15+55.00 -L-	RIP RAP CLASS II (2'-0" THICK)	GEOTEXTILE FOR DRAINAGE
	TONS	SQUARE YARDS
END BENT 1	135	150
END BENT 2	120	135

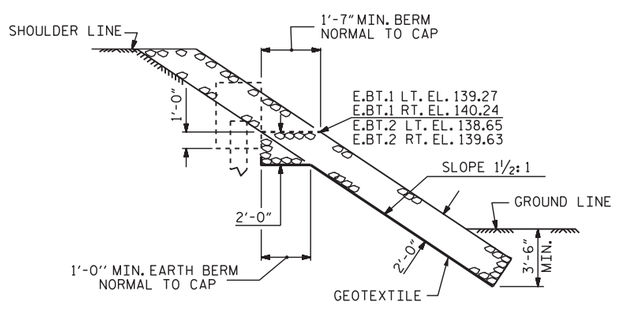

SECTION H-H

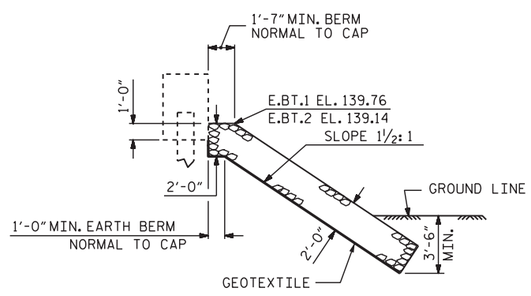

℄ SECTION

BERM RIP RAPPED

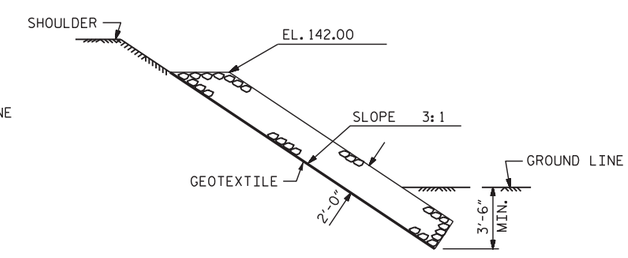

SECTION C-C

PROJECT NO. B-5744

SCOTLAND COUNTY

STATION: 15+55.00 -L-

STATE OF NORTH CAROLINA
DEPARTMENT OF TRANSPORTATION
RALEIGH

STANDARD

RIP RAP DETAILS

NORTH CAROLINA PROFESSIONAL SEAL 031583 ENGINEER KRISHNA PRASAD SODAI

Docusigned by: Krishna P. Sodai
8/29/2016

DOCUMENT NOT CONSIDERED FINAL UNLESS ALL SIGNATURES COMPLETED

REVISIONS						SHEET NO.
NO.	BY:	DATE:	NO.	BY:	DATE:	S-21
1			3			TOTAL SHEETS
2			4			22

ASSEMBLED BY : D.A. DAVENPORT DATE : 5/13/16
CHECKED BY : H. B. DESAI DATE : 8/3/16

DRAWN BY : REK 1/84
CHECKED BY : RDU 1/84

REV. 5/1/06R TLA/GM
REV. 10/1/11 MAA/GM
REV. 12/21/11 MAA/GM

17-AUG-2016 14:00
R:\Structures\Plans\B5744_SMU_RR.dgn
jdhawk

STD. NO. RR1 (Sht 2)

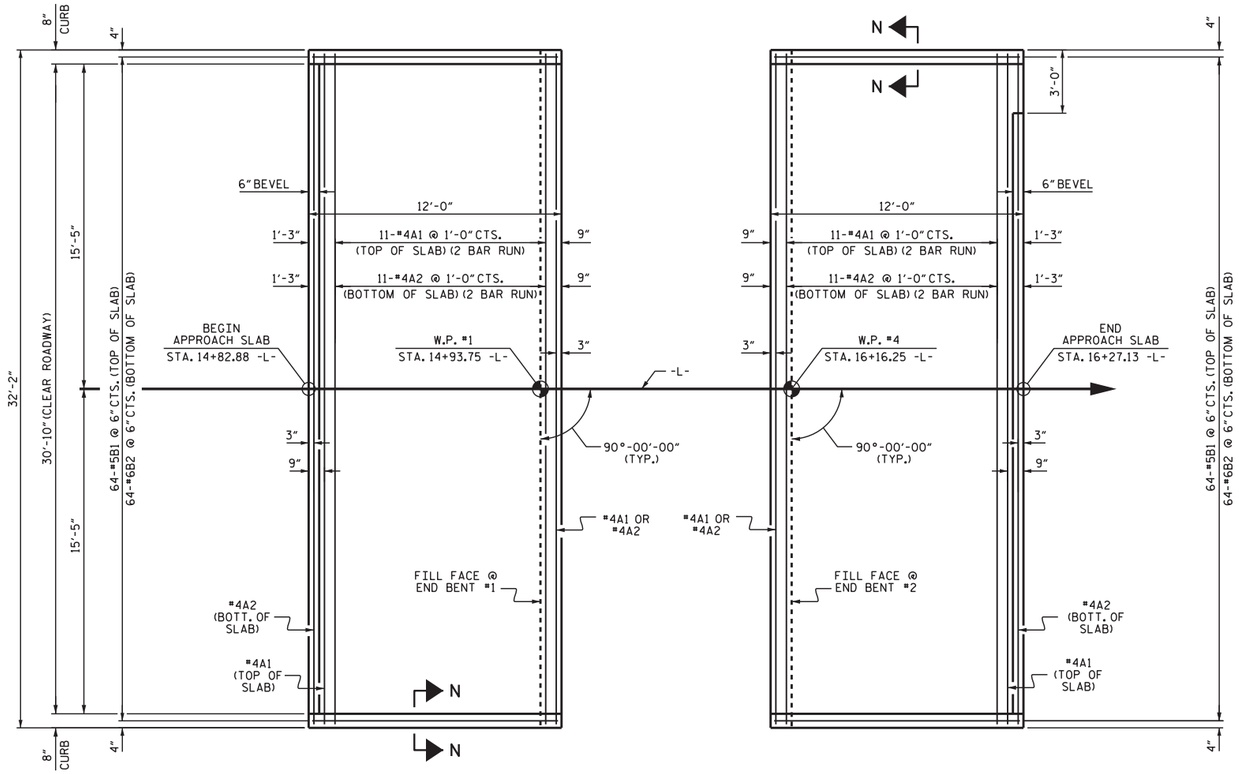

PLAN @ END BENT #1

PLAN @ END BENT #2

DIMENSIONS SHOWN ARE TYPICAL FOR BOTH APPROACH SLABS

NOTES

FOR REINFORCED BRIDGE APPROACH FILL INCLUDING GEOTEXTILE, IMPERMEABLE GEOMEMBRANE, 4" Ø DRAINAGE PIPE, #78M STONE, AND SELECT MATERIAL, SEE ROADWAY PLANS.

AREA BETWEEN THE WINGWALL AND APPROACH SLAB SHALL BE GRADED TO DRAIN THE WATER AWAY FROM THE FILL FACE OF THE BRIDGE AND SHALL BE PAVED. SEE ROADWAY PLANS.

APPROACH SLAB GROOVING IS NOT REQUIRED.

BILL OF MATERIAL

APPROACH SLAB AT EB #1

BAR	NO.	SIZE	TYPE	LENGTH	WEIGHT
* A1	26	#4	STR	16'-11"	294
A2	26	#4	STR	16'-9"	291
* B1	64	#5	STR	11'-2"	745
B2	64	#6	STR	11'-8"	1121
REINFORCING STEEL				LBS.	1412
* EPOXY COATED REINFORCING STEEL				LBS.	1039
CLASS AA CONCRETE				C. Y.	18.4

APPROACH SLAB AT EB #2

BAR	NO.	SIZE	TYPE	LENGTH	WEIGHT
* A1	26	#4	STR	16'-11"	294
A2	26	#4	STR	16'-9"	291
* B1	64	#5	STR	11'-2"	745
B2	64	#6	STR	11'-8"	1121
REINFORCING STEEL				LBS.	1412
* EPOXY COATED REINFORCING STEEL				LBS.	1039
CLASS AA CONCRETE				C. Y.	18.4

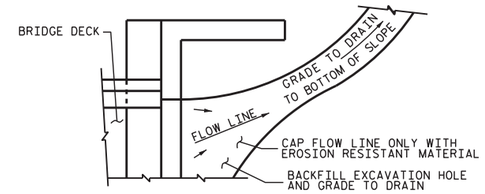

NOTE: IF THE APPROACH SLAB IS NOT CONSTRUCTED IMMEDIATELY AFTER THE BACKFILLING OF THE END BENT EXCAVATION, GRADE TO DRAIN TO THE BOTTOM OF THE SLOPE AND PROVIDE EROSION RESISTANT MATERIAL, SUCH AS FIBERGLASS ROVING OR AS DIRECTED BY THE ENGINEER TO PREVENT SOIL EROSION AND TO PROTECT THE AREA ADJACENT TO THE STRUCTURE. THE CONTRACTOR WILL BE REQUIRED TO REMOVE THESE MATERIALS PRIOR TO CONSTRUCTION OF THE APPROACH SLAB.

TEMPORARY DRAINAGE DETAIL

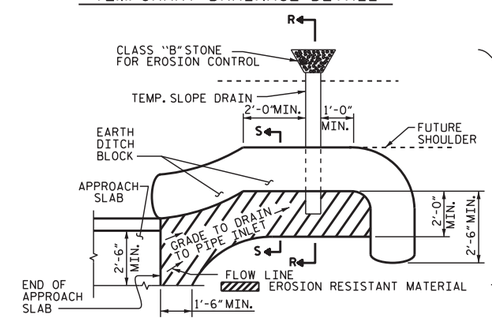

NOTE: IMMEDIATELY AFTER THE CONSTRUCTION OF THE APPROACH SLAB, THE CONTRACTOR SHALL PROVIDE TEMPORARY BERM AND SLOPE DRAIN. CONTRACTOR SHALL GRADE TO PIPE INLET AND PROVIDE EROSION RESISTANT MATERIAL AS SHOWN. THE EROSION RESISTANT MATERIAL SHALL BE EITHER 1) ASPHALT PLANT MIX, TYPE 1 OR TYPE 2, MIN. 2" DEPTH, 2) EROSION CONTROL MAT, OR 3) CONCRETE, AS DIRECTED BY THE ENGINEER. THE SLOPE DRAIN SHALL CONSIST OF A NON-PERFORATED TEMPORARY DRAINAGE PIPE, 12 INCHES IN DIAMETER.

PLAN VIEW

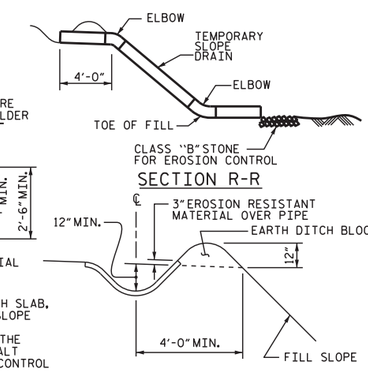

SECTION S-S

TEMPORARY BERM AND SLOPE DRAIN DETAILS

(TO BE USED WHEN SHOULDER BERM GUTTER IS REQUIRED)

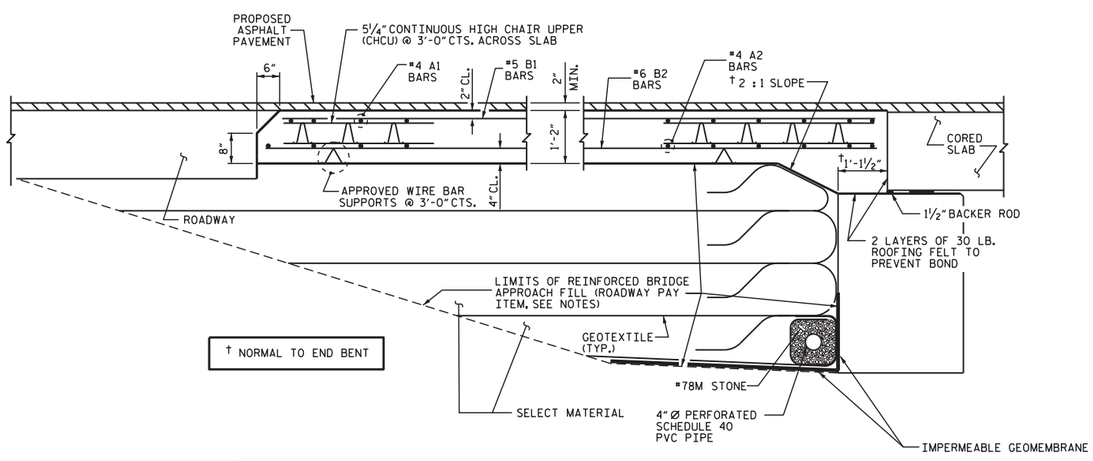

SECTION THRU SLAB

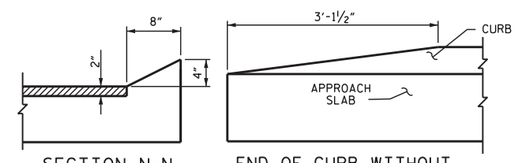

SECTION N-N

END OF CURB WITHOUT SHOULDER BERM GUTTER

CURB DETAILS

PROJECT NO. B-5744

SCOTLAND COUNTY

STATION: 15+55.00 -L-

SPLICE LENGTHS		
BAR SIZE	EPOXY COATED	UNCOATED
#4	2'-0"	1'-9"
#5	2'-6"	2'-2"
#6	3'-10"	2'-7"

NORTH CAROLINA PROFESSIONAL SEAL 031583 ENGINEER KRISHNA PRASAD SEDAI

Digitally signed by Krishna P. Sedai
Date: 2016.08.29 08:47:28 -04'00'
8/29/2016

DOCUMENT NOT CONSIDERED FINAL UNLESS ALL SIGNATURES COMPLETED

STATE OF NORTH CAROLINA
DEPARTMENT OF TRANSPORTATION
RALEIGH

STANDARD
BRIDGE APPROACH SLAB
FOR PRESTRESSED CONCRETE
CORED SLAB UNIT

90° SKEW

REVISIONS								SHEET NO.
NO.	BY:	DATE:	NO.	BY:	DATE:			S-22
1			3					TOTAL SHEETS
2			4					22

ASSEMBLED BY : D.A. DAVENPORT	DATE : 5/13/16
CHECKED BY : H. B. DESAI	DATE : 8/3/16
DRAWN BY : SHS/MAA 5-09	REV. 9-15 MAA/TMG
CHECKED BY : BCH 5-09	

29-AUG-2016 14:15
R:\Structures\Plans\B5744_SMU_AS.dgn
ksedai

STD. NO. BAS_33_90S

STANDARD NOTES

DESIGN DATA:

SPECIFICATIONS	A.A.S.H.T.O. (CURRENT)
LIVE LOAD	SEE PLANS
IMPACT ALLOWANCE	SEE A.A.S.H.T.O.
STRESS IN EXTREME FIBER OF	
STRUCTURAL STEEL - AASHTO M270 GRADE 36	20,000 LBS. PER SQ. IN.
- AASHTO M270 GRADE 50W	27,000 LBS. PER SQ. IN.
- AASHTO M270 GRADE 50	27,000 LBS. PER SQ. IN.
REINFORCING STEEL IN TENSION	
GRADE 60	24,000 LBS. PER SQ. IN.
CONCRETE IN COMPRESSION	1,200 LBS. PER SQ. IN.
CONCRETE IN SHEAR	SEE A.A.S.H.T.O.
STRUCTURAL TIMBER - TREATED OR	
UNTREATED - EXTREME FIBER STRESS	1,800 LBS. PER SQ. IN.
COMPRESSION PERPENDICULAR TO GRAIN OF TIMBER	375 LBS. PER SQ. IN.
EQUIVALENT FLUID PRESSURE OF EARTH	30 LBS. PER CU. FT. (MINIMUM)

MATERIAL AND WORKMANSHIP:

EXCEPT AS MAY OTHERWISE BE SPECIFIED ON PLANS OR IN THE SPECIAL PROVISIONS, ALL MATERIAL AND WORKMANSHIP SHALL BE IN ACCORDANCE WITH THE 2012 "STANDARD SPECIFICATIONS FOR ROADS AND STRUCTURES" OF THE N.C. DEPARTMENT OF TRANSPORTATION.

STEEL SHEET PILING FOR PERMANENT OR TEMPORARY APPLICATIONS SHALL BE HOT ROLLED.

CONCRETE:

UNLESS OTHERWISE REQUIRED ON PLANS, CLASS A CONCRETE SHALL BE USED FOR ALL PORTIONS OF ALL STRUCTURES WITH THE EXCEPTION THAT: CLASS AA CONCRETE SHALL BE USED IN BRIDGE SUPERSTRUCTURES, ABUTMENT BACKWALLS, AND APPROACH SLABS; AND CLASS B CONCRETE SHALL BE USED FOR SLOPE PROTECTION AND RIP RAP.

CONCRETE CHAMFERS:

UNLESS OTHERWISE NOTED ON THE PLANS, ALL EXPOSED CORNERS ON STRUCTURES SHALL BE CHAMFERED 3/4" WITH THE FOLLOWING EXCEPTIONS: TOP CORNERS OF CURBS MAY BE ROUNDED TO 1-1/2" RADIUS WHICH IS BUILT INTO CURB FORMS; CORNERS OF TRANSVERSE FLOOR EXPANSION JOINTS SHALL BE ROUNDED WITH A 1/4" FINISHING TOOL UNLESS OTHERWISE REQUIRED ON PLANS; AND CORNERS OF EXPANSION JOINTS IN THE ROADWAY FACES AND TOPS OF CURBS AND SIDEWALKS SHALL BE ROUNDED TO A 1/4" RADIUS WITH A FINISHING STONE OR TOOL UNLESS OTHERWISE REQUIRED ON PLANS.

DOWELS:

DOWELS WHEN INDICATED ON PLANS AS FOR CULVERT EXTENSIONS, SHALL BE EMBEDDED AT LEAST 12" INTO THE OLD CONCRETE AND GROUTED INTO PLACE WITH 1:2 CEMENT MORTAR.

ALLOWANCE FOR DEAD LOAD DEFLECTION, SETTLEMENT, ETC. IN CASTING SUPERSTRUCTURES:

BRIDGES SHALL BE BUILT ON THE GRADE OR VERTICAL CURVE SHOWN ON PLANS. SLABS, CURBS AND PARAPETS SHALL CONFORM TO THE GRADE OR CURVE.

ALL DIMENSIONS WHICH ARE GIVEN IN SECTION AND ARE AFFECTED BY DEAD LOAD DEFLECTIONS ARE DIMENSIONS AT CENTER LINE OF BEARING UNLESS OTHERWISE NOTED ON PLANS. IN SETTING FORMS FOR STEEL BEAM BRIDGES AND PRESTRESSED CONCRETE GIRDER BRIDGES, ADJUSTMENTS SHALL BE MADE DUE TO THE DEAD LOAD DEFLECTIONS FOR THE ELEVATIONS SHOWN. WHERE BLOCKS ARE SHOWN OVER BEAMS FOR BUILDING UP TO THE SLAB, THE VERTICAL DIMENSIONS OF THE BLOCKS SHALL BE ADJUSTED BETWEEN BEARINGS TO COMPENSATE FOR DEAD LOAD DEFLECTIONS, VERTICAL CURVE ORDINATE, AND ACTUAL BEAM CAMBER. WHERE BOTTOM OF SLAB IS IN LINE WITH BOTTOM OF TOP FLANGES, DEPTH OF SLAB BETWEEN BEARINGS SHALL BE ADJUSTED TO COMPENSATE FOR DEAD LOAD DEFLECTION, VERTICAL CURVE ORDINATE, AND ACTUAL BEAM CAMBER.

IN SETTING FALSEWORK AND FORMS FOR REINFORCED CONCRETE SPANS, AN ALLOWANCE SHALL BE MADE FOR DEAD LOAD DEFLECTIONS, SETTLEMENT OF FALSEWORK, AND PERMANENT CAMBER WHICH SHALL BE PROVIDED FOR IN ADDITION TO THE ELEVATIONS SHOWN. AFTER REMOVAL OF THE FALSEWORK, THE FINISHED STRUCTURES SHALL CONFORM TO THE PROFILE AND ELEVATIONS SHOWN ON THE PLANS AND CONSTRUCTION ELEVATIONS FURNISHED BY THE ENGINEER.

DETAILED DRAWINGS FOR FALSEWORK OR FORMS FOR BRIDGE SUPERSTRUCTURE AND ANY STRUCTURE OR PARTS OF A STRUCTURE AS NOTED ON THE PLANS SHALL BE SUBMITTED TO THE ENGINEER FOR APPROVAL BEFORE CONSTRUCTION OF THE FALSEWORK OR FORMS IS STARTED.

REINFORCING STEEL:

ALL REINFORCING STEEL SHALL BE DEFORMED. DIMENSIONS RELATIVE TO PLACEMENT OF REINFORCING ARE TO CENTERS OF BARS UNLESS OTHERWISE INDICATED IN THE PLANS. DIMENSIONS ON BAR DETAILS ARE TO CENTERS OF BARS OR ARE OUT TO OUT AS INDICATED ON PLANS.

WIRE BAR SUPPORTS SHALL BE PROVIDED FOR REINFORCING STEEL WHERE INDICATED ON THE PLANS. WHEN BAR SUPPORT PIECES ARE PLACED IN CONTINUOUS LINES, THEY SHALL BE SO PLACED THAT THE ENDS OF THE SUPPORTING WIRES SHALL BE LAPPED TO LOCK LEGS ON ADJOINING PIECES.

STRUCTURAL STEEL:

AT THE CONTRACTOR'S OPTION, HE MAY SUBSTITUTE 7/8" Ø SHEAR STUDS FOR THE ¾" Ø STUDS SPECIFIED ON THE PLANS. THIS SUBSTITUTION SHALL BE MADE AT THE RATE OF 3 - 7/8" Ø STUDS FOR 4 - 3/4" Ø STUDS, AND STUD SPACING CHANGES SHALL BE MADE AS NECESSARY TO PROVIDE THE SAME EQUIVALENT NUMBER OF 7/8" Ø STUDS ALONG THE BEAM AS SHOWN FOR 3/4" Ø STUDS BASED ON THE RATIO OF 3 - 7/8" Ø STUDS FOR 4 - 3/4" Ø STUDS. STUDS OF THE LENGTH SPECIFIED ON THE PLANS MUST BE PROVIDED. THE MAXIMUM SPACING SHALL BE 2'-0".

EXCEPT AT THE INTERIOR SUPPORTS OF CONTINUOUS BEAMS WHERE THE COVER PLATE IS IN CONTACT WITH BEARING PLATE, THE CONTRACTOR MAY, AT HIS OPTION, SUBSTITUTE FOR THE COVER PLATES DESIGNATED ON THE PLANS COVER PLATES OF THE EQUIVALENT AREA PROVIDED THESE PLATES ARE AT LEAST 5/16" IN THICKNESS AND DO NOT EXCEED A WIDTH EQUAL TO THE FLANGE WIDTH LESS 2" OR A THICKNESS EQUAL TO 2 TIMES THE FLANGE THICKNESS. THE SIZE OF FILLET WELDS SHALL CONFORM TO THE REQUIREMENTS OF THE CURRENT ANSI/AASHTO/AWS "BRIDGE WELDING CODE". ELECTROSLAG WELDING WILL NOT BE PERMITTED.

WITH THE SOLE EXCEPTION OF EDGES AT SURFACES WHICH BEAR ON OTHER SURFACES, ALL SHARP EDGES AND ENDS OF SHAPES AND PLATES SHALL BE SLIGHTLY ROUNDED BY SUITABLE MEANS TO A RADIUS OF APPROXIMATELY 1/16 INCH OR EQUIVALENT FLAT SURFACE AT A SUITABLE ANGLE PRIOR TO PAINTING, GALVANIZING, OR METALLIZING.

HANDRAILS AND POSTS:

METAL STANDARDS AND FACES OF THE CONCRETE END POSTS FOR THE METAL RAIL SHALL BE SET NORMAL TO THE GRADE OF THE CURB, UNLESS OTHERWISE SHOWN ON PLANS. THE METAL RAIL AND TOPS OF CONCRETE POSTS USED WITH THE ALUMINUM RAIL SHALL BE BUILT PARALLEL TO THE GRADE OF THE CURB.

METAL HANDRAILS SHALL BE IN ACCORDANCE WITH THE PLANS. RAILS SHALL BE AS MANUFACTURED FOR BRIDGE RAILING. CASTINGS SHALL BE OF A UNIFORM APPEARANCE. FINS AND OTHER DEFORMATIONS RESULTING FROM CASTING OR OTHERWISE SHALL BE REMOVED IN A MANNER SO THAT A UNIFORM COLORING OF THE COMPLETED CASTING SHALL BE OBTAINED. CASTINGS WITH DISCOLORATIONS OR OF NON-UNIFORM COLORING WILL NOT BE ACCEPTED. CERTIFIED MILL REPORTS ARE REQUIRED FOR METAL RAILS AND POSTS.

SPECIAL NOTES:

GENERALLY, IN CASE OF DISCREPANCY, THIS STANDARD SHEET OF NOTES SHALL GOVERN OVER THE SPECIFICATIONS, BUT THE REMAINDER OF THE PLANS SHALL GOVERN OVER NOTES HEREON, AND SPECIAL PROVISIONS SHALL GOVERN OVER ALL. SEE SPECIFICATIONS ARTICLE 105-4.

ENGLISH

JANUARY, 1990