This electronic collection of documents is provided for the convenience of the user and is Not a Certified Document –

The documents contained herein were originally issued and sealed by the individuals whose names and license numbers appear on each page, on the dates appearing with their signature on that page.
This file or an individual page shall not be considered a certified document.

DocuSign Envelope ID: 2CDFDB12-5201-45A1-AF97-162A6D4D4CD1

09/08/99

TIP PROJECT: B–5749

CONTRACT:

See Sheet 1-A For Index of Sheets

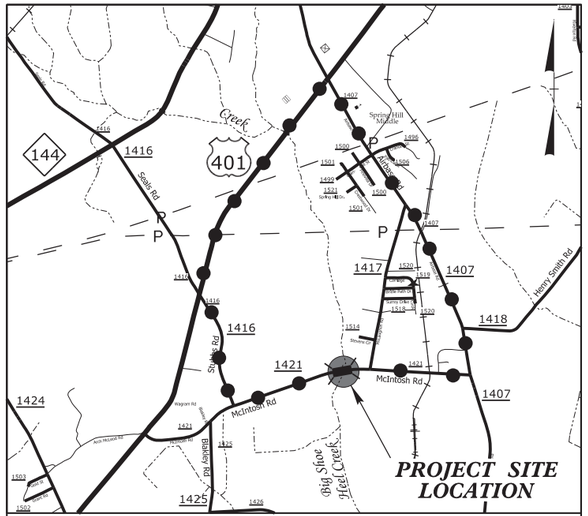

VICINITY MAP

OFF-SITE DETOUR ROUTE

N.T.S.

STATE OF NORTH CAROLINA
DIVISION OF HIGHWAYS

SCOTLAND COUNTY

STATE	STATE PROJECT REFERENCE NO.	SHEET NO.	TOTAL SHEETS
N.C.	B–5749	1	

STATE PROJ. NO.	F. A. PROJ. NO.	DESCRIPTION
45705.1.1		P.E.
45705.2.1		R/W

LOCATION: BRIDGE NO. 820036 ON SR 1421 (MCINTOSH ROAD) OVER BIG SHOE HEEL CREEK

TYPE OF WORK: GRADING, DRAINAGE, PAVING AND STRUCTURE

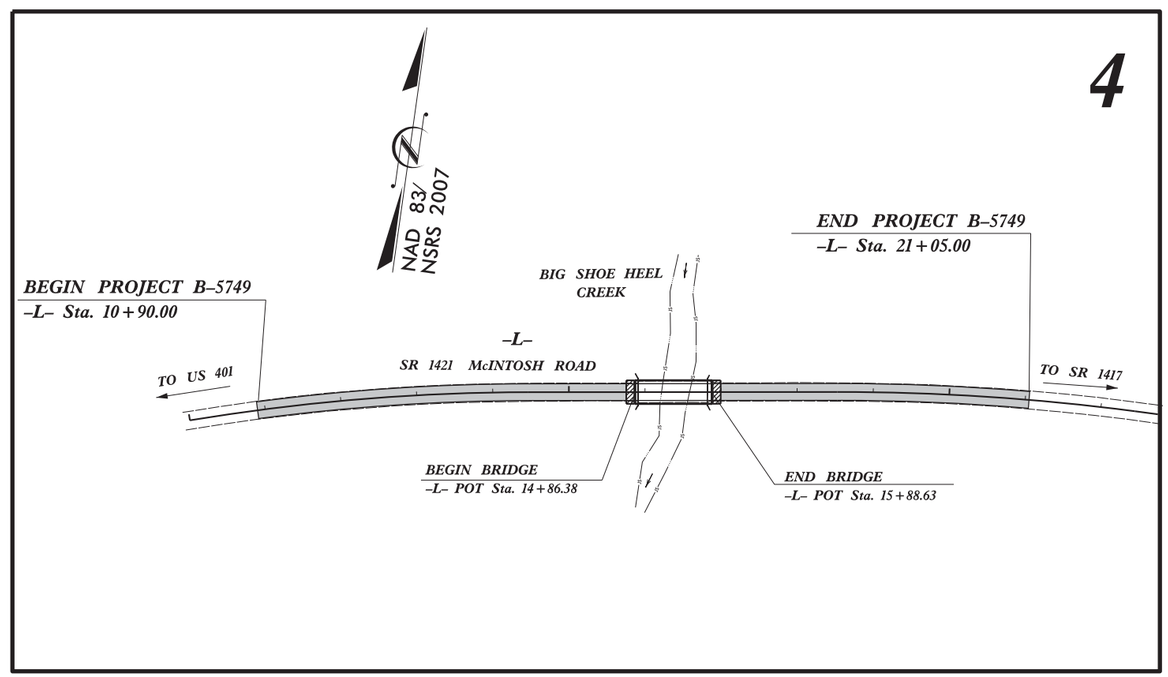

DOCUMENT NOT CONSIDERED FINAL UNLESS ALL SIGNATURES COMPLETED

GRAPHIC SCALES

50 25 0 50 100 — PLANS

50 25 0 50 100 — PROFILE (HORIZONTAL)

10 5 0 10 20 — PROFILE (VERTICAL)

DESIGN DATA

ADT 2010 = 640
ADT =
K = %
D = %
T = 6 % *
V = 60 MPH
* TTST = DUAL
FUNC CLASS =
LOCAL
SUBREGIONAL

PROJECT LENGTH

LENGTH ROADWAY PROJECT B–5749	=	0.173 mi
LENGTH STRUCTURE PROJECT B–5749	=	0.019 mi
TOTAL LENGTH OF PROJECT B–5749	=	0.192 mi

PLANS PREPARED BY:
CH ENGINEERING
3220 GLEN ROYAL RD, RALEIGH, NC 27617
TELE 919.788.0224 FAX 919.788.0232
NC LICENSE #P-0189

2012 STANDARD SPECIFICATIONS

RIGHT OF WAY DATE:
JULY 1, 2016

LETTING DATE:
DECEMBER 2016

PLANS PREPARED FOR:
DIVISION OF HIGHWAYS
DIVISION 8
902 N Sandhills Blvd
Aberdeen, NC 28315

BRIAN A. WILES, PE
PROJECT ENGINEER

TIM WELCH, PE
NCDOT CONTACT
DIV 8 BRIDGE PROGRAM MANAGER

HYDRAULICS ENGINEER
DocuSigned by: Karen Hefner
11/3/2016
SIGNATURE: P.E.
NORTH CAROLINA PROFESSIONAL SEAL 31025 ENGINEER KAREN HEFNER

ROADWAY DESIGN ENGINEER
11/3/2016
DocuSigned by: Brian A Wiles
SIGNATURE: P.E.
NORTH CAROLINA PROFESSIONAL SEAL 16689 ENGINEER BRIAN ALLEN WILES

STATE OF NORTH CAROLINA DEPARTMENT OF TRANSPORTATION

11/3/2016
R:\Roadway\Proj\B5749_Rdy_tsh.dgn
$USERNAME$

CH ENGINEERING
3220 GLEN ROYAL RD. RALEIGH, NC 27617
TELE 919.788.0224 FAX 919.788.0232
NC LICENSE #P-0189

PROJECT REFERENCE NO.	SHEET NO.
B-5749	1A

ROADWAY DESIGN ENGINEER
11/3/2016
NORTH CAROLINA PROFESSIONAL SEAL 16689 ENGINEER BRIAN A. WILES
DocuSigned by: Brian A Wiles
DOCUSIGN ATTACHED

DOCUMENT NOT CONSIDERED FINAL UNLESS ALL SIGNATURES COMPLETED

INDEX OF SHEETS

SHEET NUMBER	SHEET
1	TITLE SHEET
1A	INDEX OF SHEETS, GENERAL NOTES AND STANDARD DRAWINGS
1B	CONVENTIONAL SYMBOLS
1C-1	SURVEY CONTROL SHEETS
2A-1	PAVEMENT SCHEDULE, TYPICAL SECTIONS AND WEDGING DETAILS
2C-1	DETAIL OF STRUCTURE ANCHOR UNIT, TYPE III
3B-1	SUMMARIES OF EARTHWORK, ASPHALT PAVEMENT REMOVAL, SHOULDER BERM GUTTERR AND GUARDRAIL
3D-1	LIST OF PIPES, ENDWALLS, ETC. (for PIPES 48" & UNDER)
4	PLAN SHEET
5	PROFILE SHEET
TMP-1 THRU TMP-2	TRAFFIC MANAGEMENT PLANS
EC-1 THRU EC-5	EROSION CONTROL PLANS
UO-1 THRU UO-2	UTILITIES BY OTHERS PLANS
X-1 THRU X-14	CROSS-SECTIONS
S-1 THRU S-16	STRUCTURE PLANS

GENERAL NOTES:

2012 SPECIFICATIONS
EFFECTIVE: 01-17-2012
REVISED: 10-31-2014

GRADE LINE:
GRADING AND SURFACING:

THE GRADE LINES SHOWN DENOTE THE FINISHED ELEVATION OF THE PROPOSED SURFACING AT GRADE POINTS SHOWN ON THE TYPICAL SECTIONS. GRADE LINES MAY BE ADJUSTED AT THEIR BEGINNING AND ENDING AND AT STRUCTURES AS DIRECTED BY THE ENGINEER IN ORDER TO SECURE A PROPER TIE-IN.

CLEARING:

CLEARING ON THIS PROJECT SHALL BE PERFORMED TO THE LIMITS ESTABLISHED BY METHOD II.

SUPERELEVATION:

ALL CURVES ON THIS PROJECT SHALL BE SUPERELEVATED IN ACCORDANCE WITH STD. NO. 225.04 USING THE RATE OF SUPERELEVATION AND RUNOFF SHOWN ON THE PLANS. SUPERELEVATION IS TO BE REVOLVED ABOUT THE GRADE POINTS SHOWN ON THE TYPICAL SECTIONS.

SHOULDER CONSTRUCTION:

ASPHALT, EARTH, AND CONCRETE SHOULDER CONSTRUCTION ON THE HIGH SIDE OF SUPERELEVATED CURVES SHALL BE IN ACCORDANCE WITH STD. NO. 560.01

GUARDRAIL:

THE GUARDRAIL LOCATIONS SHOWN ON THE PLANS MAY BE ADJUSTED DURING CONSTRUCTION AS DIRECTED BY THE ENGINEER. THE CONTRACTOR SHOULD CONSULT WITH THE ENGINEER PRIOR TO ORDERING GUARDRAIL MATERIAL.

TEMPORARY SHORING:

SHORING REQUIRED FOR THE MAINTENANCE OF TRAFFIC WILL BE PAID FOR AS "EXTRA WORK" IN ACCORDANCE WITH SECTION 104-7.

SUBSURFACE PLANS:

NO SUBSURFACE PLANS ARE AVAILABLE ON THIS PROJECT. THE CONTRACTOR SHOULD MAKE HIS OWN INVESTIGATION AS TO THE SUBSURFACE CONDITIONS.

END BENTS:

THE ENGINEER SHALL CHECK THE STRUCTURE END BENT PLANS, DETAILS, AND CROSS-SECTION PRIOR TO SETTING OF THE SLOPE STAKES FOR THE EMBANKMENT OR EXCAVATION APPROACHING A BRIDGE.

UTILITIES:

UTILITY OWNERS ON THIS PROJECT ARE Duke Energy Progress - Power, Windstream - Telephone and City of Laurinburg - Water.

ANY RELOCATION OF EXISTING UTILITIES WILL BE ACCOMPLISHED BY OTHERS, EXCEPT AS SHOWN ON THE PLANS.

EFF. 01-17-2012
REV. 02-29-2016

2012 ROADWAY ENGLISH STANDARD DRAWINGS

The following Roadway Standards as appear in "Roadway Standard Drawings" Highway Design Branch - N. C. Department of Transportation - Raleigh, N. C., Dated January, 2012 are applicable to this project and by reference hereby are considered a part of these plans:

STD.NO.	TITLE
DIVISION 2 - EARTHWORK	
200.02	Method of Clearing - Method II
225.02	Guide for Grading Subgrade - Secondary and Local
225.04	Method of Obtaining Superelevation - Two Lane Pavement
DIVISION 3 - PIPE CULVERTS	
300.01	Method of Pipe Installation
DIVISION 4 - MAJOR STRUCTURES	
422.11	Bridge Approach Fills - Sub Regional Tier
DIVISION 5 - SUBGRADE, BASES AND SHOULDERS	
560.01	Method of Shoulder Construction - High Side of Superelevated Curve - Method I
DIVISION 6 - ASPHALT BASES AND PAVEMENTS	
654.01	Pavement Repairs
DIVISION 8 - INCIDENTALS	
840.00	Concrete Base Pad for Drainage Structures
840.18	Concrete Grated Drop Inlet Type 'B' - 12" thru 36" Pipe
840.24	Frames and Narrow Slot Sag Grates
840.25	Anchorage for Frames - Brick or Concrete or Precast
840.27	Brick Grated Drop Inlet Type 'B' - 12" thru 36" Pipe
840.29	Frames and Narrow Slot Flat Grates
840.35	Traffic Bearing Grated Drop Inlet - for Cast Iron Double Frame and Grates
840.45	Precast Drainage Structure
840.46	Traffic Bearing Precast Drainage Structure
840.66	Drainage Structure Steps
846.01	Concrete Curb, Gutter and Curb & Gutter
846.04	Drop Inlet Installation in Shoulder Berm Gutter
862.01	Guardrail Placement
862.02	Guardrail Installation
876.02	Guide for Rip Rap at Pipe Outlets

8/17/99
11/3/2016
R:\Roadway\Proj\B5749_Rdy_tsh_1A.dgn
USERNAME

04/06/15

PROJECT REFERENCE NO.	SHEET NO.
B-5749	1B

STATE OF NORTH CAROLINA, DIVISION OF HIGHWAYS

CONVENTIONAL PLAN SHEET SYMBOLS

Note: Not to Scale **S.U.E. = Subsurface Utility Engineering*

BOUNDARIES AND PROPERTY:

- State Line
- County Line
- Township Line
- City Line
- Reservation Line
- Property Line
- Existing Iron Pin — EIP
- Property Corner
- Property Monument — ECM
- Parcel/Sequence Number — 123
- Existing Fence Line
- Proposed Woven Wire Fence
- Proposed Chain Link Fence
- Proposed Barbed Wire Fence
- Existing Wetland Boundary — WLB
- Proposed Wetland Boundary — WLB
- Existing Endangered Animal Boundary — EAB
- Existing Endangered Plant Boundary — EPB
- Existing Historic Property Boundary — HPB
- Known Contamination Area: Soil
- Potential Contamination Area: Soil
- Known Contamination Area: Water
- Potential Contamination Area: Water
- Contaminated Site: Known or Potential

BUILDINGS AND OTHER CULTURE:

- Gas Pump Vent or U/G Tank Cap
- Sign — S
- Well — W
- Small Mine
- Foundation
- Area Outline
- Cemetery
- Building
- School
- Church
- Dam

HYDROLOGY:

- Stream or Body of Water
- Hydro, Pool or Reservoir
- Jurisdictional Stream — JS
- Buffer Zone 1 — BZ 1
- Buffer Zone 2 — BZ 2
- Flow Arrow
- Disappearing Stream
- Spring
- Wetland
- Proposed Lateral, Tail, Head Ditch — FLOW
- False Sump

RAILROADS:

- Standard Gauge — CSX TRANSPORTATION
- RR Signal Milepost — MILEPOST 35
- Switch — SWITCH
- RR Abandoned
- RR Dismantled

RIGHT OF WAY:

- Baseline Control Point
- Existing Right of Way Marker
- Existing Right of Way Line
- Proposed Right of Way Line — RW
- Proposed Right of Way Line with Iron Pin and Cap Marker — RW
- Proposed Right of Way Line with Concrete or Granite R/W Marker — RW
- Proposed Control of Access Line with Concrete C/A Marker — CA
- Existing Control of Access — CA
- Proposed Control of Access — CA
- Existing Easement Line — E
- Proposed Temporary Construction Easement — E
- Proposed Temporary Drainage Easement — TDE
- Proposed Permanent Drainage Easement — PDE
- Proposed Permanent Drainage / Utility Easement — DUE
- Proposed Permanent Utility Easement — PUE
- Proposed Temporary Utility Easement — TUE
- Proposed Aerial Utility Easement — AUE
- Proposed Permanent Easement with Iron Pin and Cap Marker

ROADS AND RELATED FEATURES:

- Existing Edge of Pavement
- Existing Curb
- Proposed Slope Stakes Cut — C
- Proposed Slope Stakes Fill — F
- Proposed Curb Ramp — CR
- Existing Metal Guardrail
- Proposed Guardrail
- Existing Cable Guiderail
- Proposed Cable Guiderail
- Equality Symbol
- Pavement Removal

VEGETATION:

- Single Tree
- Single Shrub
- Hedge
- Woods Line
- Orchard
- Vineyard — Vineyard

EXISTING STRUCTURES:

MAJOR:

- Bridge, Tunnel or Box Culvert — CONC
- Bridge Wing Wall, Head Wall and End Wall — CONC WW

MINOR:

- Head and End Wall — CONC HW
- Pipe Culvert
- Footbridge
- Drainage Box: Catch Basin, DI or JB — CB
- Paved Ditch Gutter
- Storm Sewer Manhole — S
- Storm Sewer — S

UTILITIES:

POWER:

- Existing Power Pole
- Proposed Power Pole
- Existing Joint Use Pole
- Proposed Joint Use Pole
- Power Manhole — P
- Power Line Tower
- Power Transformer
- U/G Power Cable Hand Hole
- H-Frame Pole
- U/G Power Line LOS B (S.U.E.*) — P
- U/G Power Line LOS C (S.U.E.*) — P
- U/G Power Line LOS D (S.U.E.*) — P

TELEPHONE:

- Existing Telephone Pole
- Proposed Telephone Pole
- Telephone Manhole — T
- Telephone Pedestal — T
- Telephone Cell Tower
- U/G Telephone Cable Hand Hole — HH
- U/G Telephone Cable LOS B (S.U.E.*) — T
- U/G Telephone Cable LOS C (S.U.E.*) — T
- U/G Telephone Cable LOS D (S.U.E.*) — T
- U/G Telephone Conduit LOS B (S.U.E.*) — TC
- U/G Telephone Conduit LOS C (S.U.E.*) — TC
- U/G Telephone Conduit LOS D (S.U.E.*) — TC
- U/G Fiber Optics Cable LOS B (S.U.E.*) — T FO
- U/G Fiber Optics Cable LOS C (S.U.E.*) — T FO
- U/G Fiber Optics Cable LOS D (S.U.E.*) — T FO

WATER:

- Water Manhole — W
- Water Meter
- Water Valve
- Water Hydrant
- U/G Water Line LOS B (S.U.E*) — W
- U/G Water Line LOS C (S.U.E*) — W
- U/G Water Line LOS D (S.U.E*) — W
- Above Ground Water Line — A/G Water

TV:

- TV Pedestal — C
- TV Tower
- U/G TV Cable Hand Hole — HH
- U/G TV Cable LOS B (S.U.E.*) — TV
- U/G TV Cable LOS C (S.U.E.*) — TV
- U/G TV Cable LOS D (S.U.E.*) — TV
- U/G Fiber Optic Cable LOS B (S.U.E.*) — TV FO
- U/G Fiber Optic Cable LOS C (S.U.E.*) — TV FO
- U/G Fiber Optic Cable LOS D (S.U.E.*) — TV FO

GAS:

- Gas Valve
- Gas Meter
- U/G Gas Line LOS B (S.U.E.*) — G
- U/G Gas Line LOS C (S.U.E.*) — G
- U/G Gas Line LOS D (S.U.E.*) — G
- Above Ground Gas Line — A/G Gas

SANITARY SEWER:

- Sanitary Sewer Manhole
- Sanitary Sewer Cleanout
- U/G Sanitary Sewer Line — SS
- Above Ground Sanitary Sewer — A/G Sanitary Sewer
- SS Forced Main Line LOS B (S.U.E.*) — FSS
- SS Forced Main Line LOS C (S.U.E.*) — FSS
- SS Forced Main Line LOS D (S.U.E.*) — FSS

MISCELLANEOUS:

- Utility Pole
- Utility Pole with Base
- Utility Located Object
- Utility Traffic Signal Box — S
- Utility Unknown U/G Line LOS B (S.U.E.*) — ?UTL
- U/G Tank; Water, Gas, Oil
- Underground Storage Tank, Approx. Loc. — UST
- A/G Tank; Water, Gas, Oil
- Geoenvironmental Boring
- U/G Test Hole LOS A (S.U.E.*)
- Abandoned According to Utility Records — AATUR
- End of Information — E.O.I.

6/2/99

SURVEY CONTROL SHEET B–5749
(PRELIMINARY)

CH ENGINEERING
3220 GLEN ROYAL RD. RALEIGH, NC 27617
TELE 919.788.0224 FAX 919.788.0232
NC LICENSE #P-0189

PROJECT REFERENCE NO.	SHEET NO.
B–5749	1C–1

BL	POINT	DESC.	NORTH	EAST	ELEVATION	L STATION	OFFSET
	1	GPS B-5749-1	399116.030	1885570.207	209.32	11+26.66	20.83 LT
	101	BL-101	399194.161	1886020.372	209.51	15+81.62	15.95 LT
	2	GPS B-5749-2	399276.267	1886910.630	219.97	OUTSIDE PROJECT LIMITS	

****
BM1 ELEVATION = 217.48
N 399108 E 1886762
L STATION 10+00.00
N 87° 55'11" E 1309.46
BENCH TIE NAIL SET IN 12" PINE TREE
****

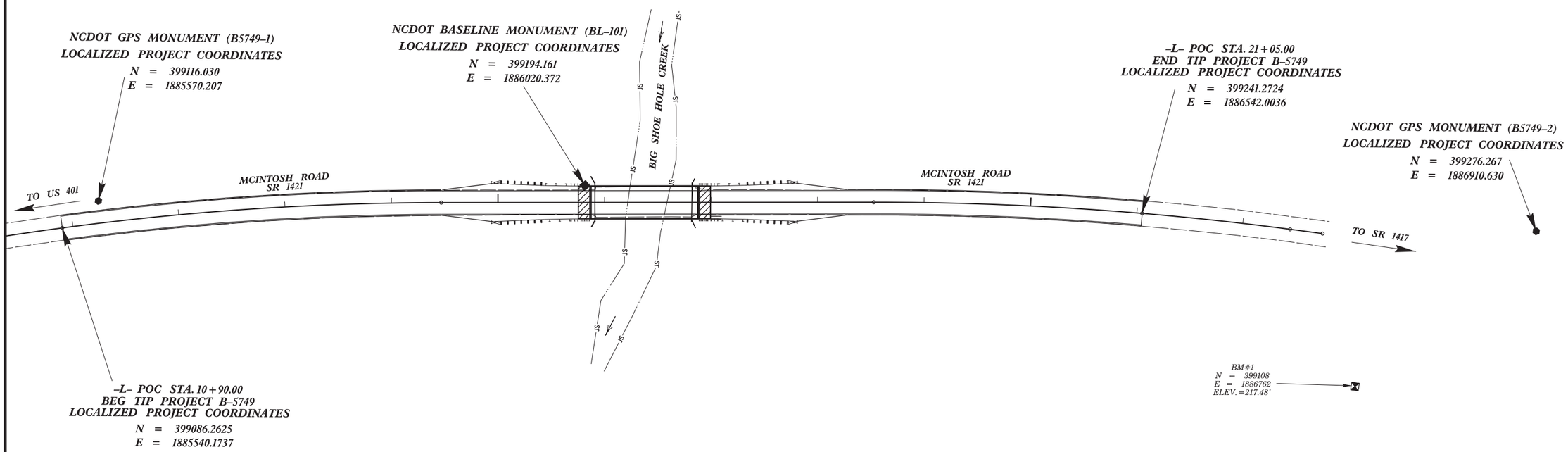

DATUM DESCRIPTION

THE LOCALIZED COORDINATE SYSTEM DEVELOPED FOR THIS PROJECT IS BASED ON THE STATE PLANE COORDINATES ESTABLISHED BY CH ENGINEERING FOR MONUMENT "B5749-1"
WITH NAD 83/NSRS 2007 STATE PLANE GRID COORDINATES OF
NORTHING: 399116.030(ft) EASTING: 1885570.207(ft)
ELEVATION: 209.32(ft)
THE AVERAGE COMBINED GRID FACTOR USED ON THIS PROJECT (GROUND TO GRID) IS: 0.999892596
THE N.C. LAMBERT GRID BEARING AND LOCALIZED HORIZONTAL GROUND DISTANCE FROM "B5749-1" TO -L- STATION 10+90.00 IS
S 45° 15' 16.70" W 42.29'
ALL LINEAR DIMENSIONS ARE LOCALIZED HORIZONTAL DISTANCES
VERTICAL DATUM USED IS NAVD 88

NOTES:

SITE CALIBRATION INFORMATION HAS NOT BEEN PROVIDED FOR THIS PROJECT. IF FURTHER INFORMATION IS NEEDED, PLEASE CONTACT THE LOCATION AND SURVEYS UNIT.

◆ INDICATES CONTROL MONUMENTS USED OR SET FOR HORIZONTAL PROJECT CONTROL BY THE NCDOT LOCATION AND SURVEYS UNIT.

● INDICATES GEODETIC CONTROL MONUMENTS USED OR SET FOR HORIZONTAL PROJECT CONTROL BY THE NCDOT LOCATION AND SURVEYS UNIT.

PROJECT CONTROL ESTABLISHED USING GLOBAL POSITIONING SYSTEM.

NOTE: DRAWING NOT TO SCALE

10/27/2006
R:\Roadway\Proj\B5749_rdy_1C-1.dgn
USERNAME

CH ENGINEERING
3220 GLEN ROYAL RD. RALEIGH, NC 27617
TELE 919.788.0224 FAX 919.788.0232
NC LICENSE #P-0189

PROJECT REFERENCE NO.	SHEET NO.
B-5749	2A-1

ROADWAY DESIGN ENGINEER
11/3/2016
NORTH CAROLINA PROFESSIONAL SEAL 16689 ENGINEER BRIAN A. WILES
DocuSigned by: Brian A Wiles
EN

PAVEMENT DESIGN ENGINEER

DOCUMENT NOT CONSIDERED FINAL UNLESS ALL SIGNATURES COMPLETED

PAVEMENT SCHEDULE

C1	PROP. APPROX. 2″ ASPHALT CONCRETE SURFACE COURSE, TYPE SF9.5A, AT AN AVERAGE RATE OF 110 LBS. PER SQ. YD. IN EACH OF TWO LAYERS.
C2	PROP. VAR. DEPTH ASPHALT CONCRETE SURFACE COURSE, TYPE SF9.5A, AT AN AVERAGE RATE OF 110 LBS. PER SQ. YD. PER 1″ DEPTH. TO BE PLACED IN LAYERS NOT TO EXCEED 1½″ IN DEPTH.
D1	PROP. APPROX. 3″ ASPHALT CONCRETE INTERMEDIATE COURSE, TYPE I19.0B, AT AN AVERAGE RATE OF 342 LBS. PER SQ. YD.
D2	PROP. VAR. DEPTH ASPHALT CONCRETE INTERMEDIATE COURSE, TYPE I19.0B, AT AN AVERAGE RATE OF 114 LBS. PER SQ. YD. PER 1″ DEPTH, TO BE PLACED IN LAYERS NOT LESS THAN 2½″ IN DEPTH OR GREATER THAN 4″ IN DEPTH.
E1	PROP. APPROX. 5½″ ASPHALT CONCRETE BASE COURSE, TYPE B25.0B, AT AN AVERAGE RATE OF 627 LBS. PER SQ. YD.
E2	PROP. VAR. DEPTH ASPHALT CONCRETE BASE COURSE, TYPE B25.0B, AT AN AVERAGE RATE OF 114 LBS. PER SQ. YD. PER 1″ DEPTH. TO BE PLACED IN LAYERS NOT LESS THAN 3″ IN DEPTH OR GREATER THAN 5½″ IN DEPTH.
T	EARTH MATERIAL.
U	EXISTING PAVEMENT.
W	VARIABLE DEPTH ASPHALT PAVEMENT (SEE STANDARD WEDGING DETAIL THIS SHEET)

NOTE: PAVEMENT EDGE SLOPES ARE 1:1 UNLESS SHOWN OTHERWISE.

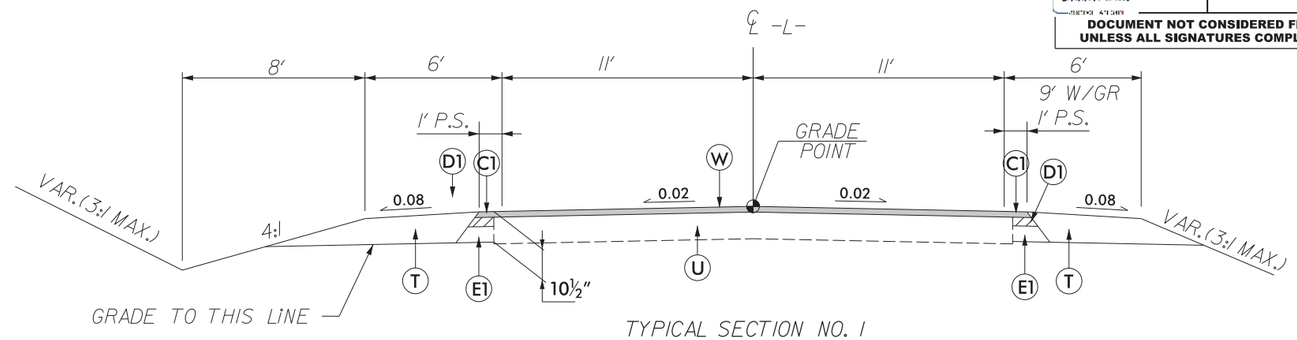

TYPICAL SECTION NO. 1
-L- STA 10+90.00 TO -L- STA 14+00.00
-L- STA 17+50.00 TO -L- STA 21+05.00

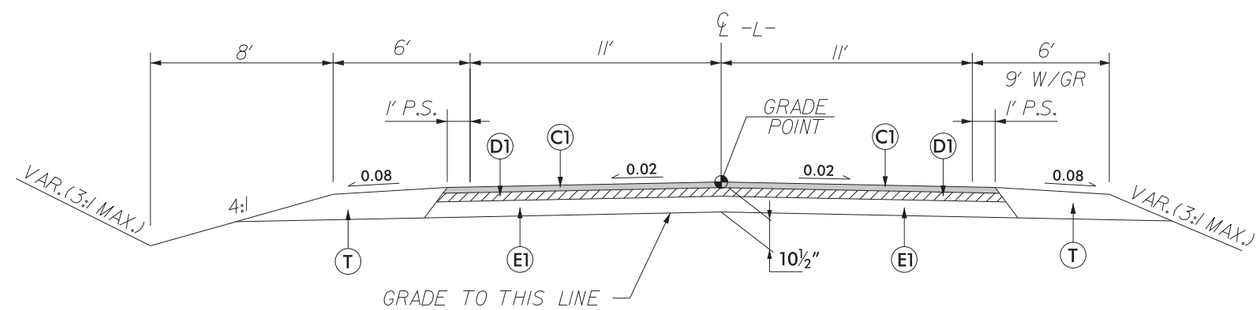

TYPICAL SECTION NO. 2
-L- STA 14+00.00 TO -L- STA 15+86.38 (BEGIN BRIDGE)
-L- STA 16+88.63 (END BRIDGE) TO -L- STA 17+50.00

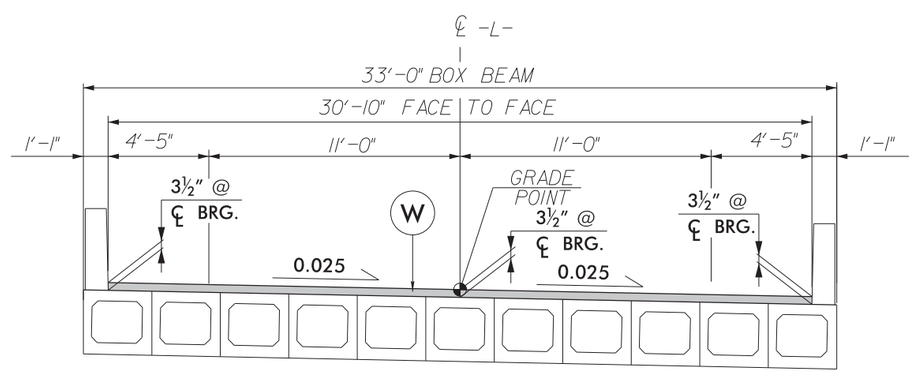

TYPICAL SECTION NO. 3
-L- STA 15+86.38 TO -L- STA 16+88.63

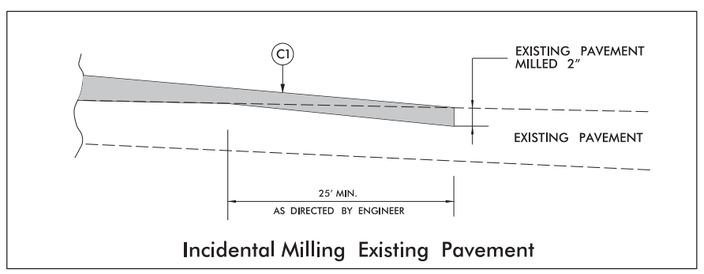

Incidental Milling Existing Pavement

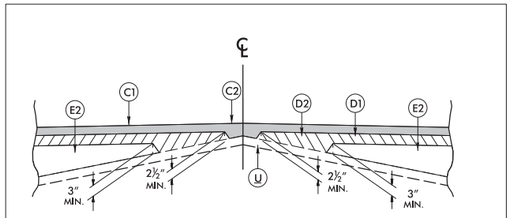

Detail Showing Method of Wedging

6/2/99
11/3/2016
R:\Roadway\Proj\B5749_Rdy_typ.dgn
USERNAME

$$$$$$SYSTIME$$$$$
$$$$$$$$$$$$$$$DGN$$$$$$$$$$$$$$$$$
$$$$USERNAME$$$$

STATE OF NORTH CAROLINA
DEPT. OF TRANSPORTATION
DIVISION OF HIGHWAYS
RALEIGH, N.C.

ENGLISH DETAIL DRAWING FOR
STRUCTURE ANCHOR UNITS
GUARDRAIL ANCHOR UNIT, TYPE III FOR ATTACHMENT TO RAIL ON BRIDGE - SUB REGIONAL TIER

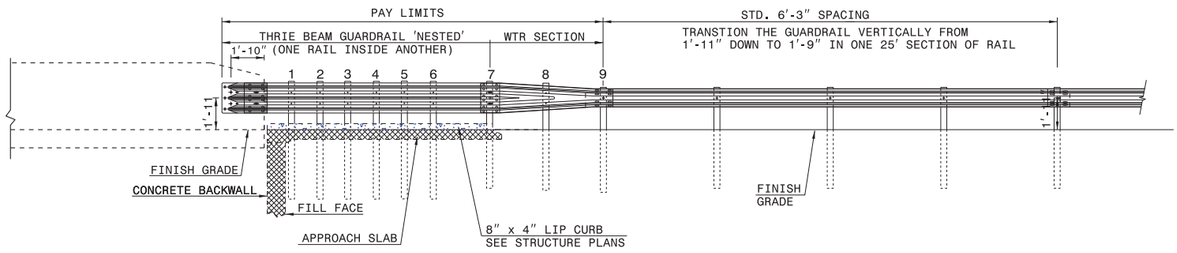

ELEVATION

NOTE:
**POST NOT REQUIRED FOR SKEW ANGLES GREATER THAN 150° OR LESS THAN 30° UNLESS OTHERWISE DIRECTED BY THE ENGINEER.
*THE DISTANCE FROM END OF BRIDGE RAIL TO CENTER LINE OF THE FIRST POST SHOULD BE 11½" IF CONCRETE BACKWALL IS NOT PRESENT.
-SHOULDER BERM GUTTER MUST BE INSTALLED TO THE LIMITS 8" x 4" LIP CURB IS SHOWN IF ANCHOR UNIT IS NOT ADJACENT TO AN APPROACH SLAB.
-MEASURE GUARDRAIL HEIGHT FROM THE TOP OF ADJACENT SURFACE (SHOULDER, BERM, OR GUTTER).
-LAP JOINTS IN THE DIRECTION OF TRAFFIC FLOW.
-SEE SHEET 5 FOR POST SECTIONS 1 THRU 9.

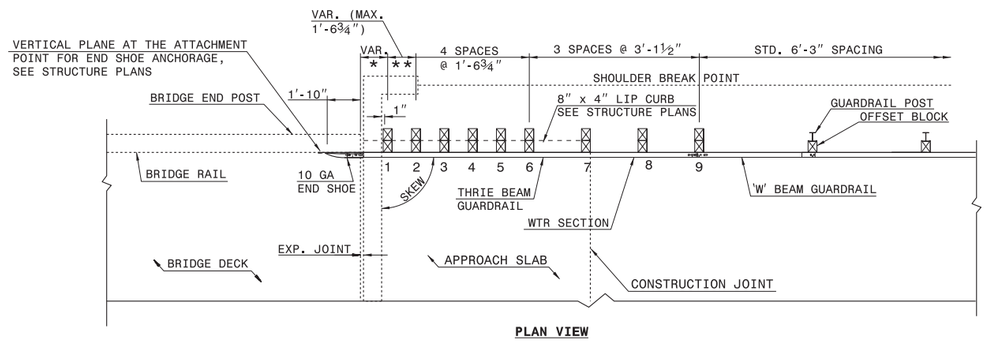

PLAN VIEW

GUARDRAIL ANCHOR UNIT, TYPE III FOR ATTACHMENT TO RAIL ON BRIDGE - SUB REGIONAL TIER

SHEET 2 OF 7
862d03

STATE OF NORTH CAROLINA
DEPT. OF TRANSPORTATION
DIVISION OF HIGHWAYS
RALEIGH, N.C.

ENGLISH DETAIL DRAWING FOR
STRUCTURE ANCHOR UNITS
GUARDRAIL ANCHOR UNIT, TYPE III FOR ATTACHMENT TO RAIL ON BRIDGE - SUB REGIONAL TIER

SHEET 2 OF 7
862d03

STATE OF NORTH CAROLINA
DEPT. OF TRANSPORTATION
DIVISION OF HIGHWAYS
RALEIGH, N.C.

ENGLISH DETAIL DRAWING FOR
STRUCTURE ANCHOR UNITS
GUARDRAIL ANCHOR UNIT, TYPE III

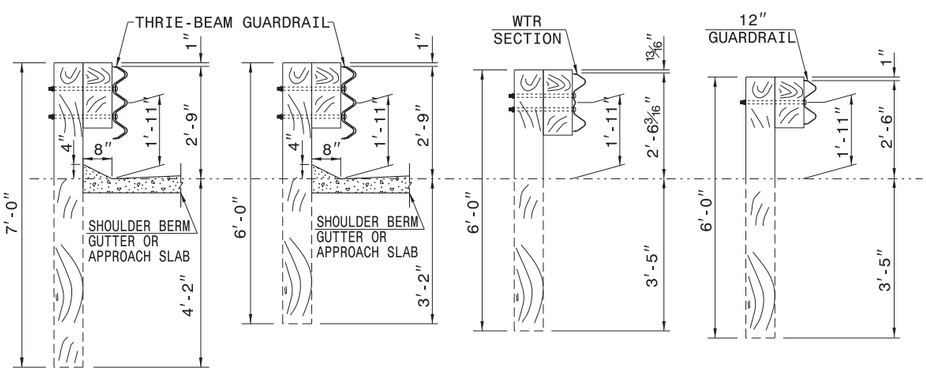

SECTION OF THRIE BEAM POSTS 1 THRU 6

SECTION OF THRIE BEAM POST 7

SECTION OF WTR BEAM POST 8

SECTION OF 'W' BEAM POST 9

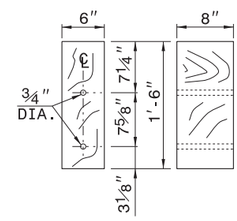

THRIE BEAM OFFSET BLOCK

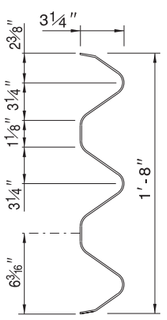

THRIE-BEAM SECTION

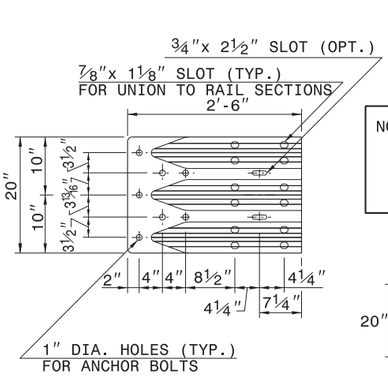

END SHOE

NOTE: THE MID POST AND OFFSET BLOCK OF THE WTR SECTION WILL REQUIRE SPECIAL BOLT HOLE DRILLING IN THE THRIE BEAM OFFSET BLOCK AND LINE POST.

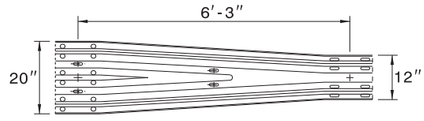

WTR SECTION
ELEVATION VIEW

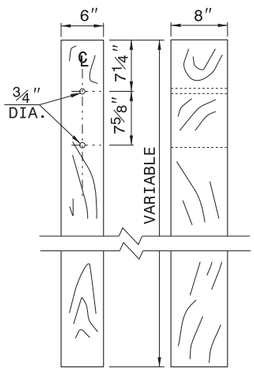

THRIE BEAM LINE POST

SHEET 3 OF 7
862d03

STATE OF NORTH CAROLINA
DEPT. OF TRANSPORTATION
DIVISION OF HIGHWAYS
RALEIGH, N.C.

ENGLISH DETAIL DRAWING FOR
STRUCTURE ANCHOR UNITS
GUARDRAIL ANCHOR UNIT, TYPE III

SHEET 3 OF 7
862d03

CONTRACT STANDARDS AND DEVELOPMENT UNIT
Office 919-707-6950 FAX 919-250-4119

SEE TITLE BLOCK

ORIGINAL BY: J. HOMERTON DATE: 06-22-12
MODIFIED BY: DATE:
CHECKED BY: DATE:
FILE SPEC.:

PROJECT REFERENCE NO. B-5749
SHEET NO. 2C-1

12/06/07

COMPUTED BY:	DATE:
CHECKED BY:	DATE:

STATE OF NORTH CAROLINA
DIVISION OF HIGHWAYS

PROJECT REFERENCE NO.	SHEET NO.
B-5749	3B-1

SUMMARY OF EARTHWORK

IN CUBIC YARDS

STATION	STATION	UNCL. EXCAV.	EMBANK. +%	BORROW	WASTE
-L- 10+90	15+86.38	47	1,121	1,074	
	SUBTOTAL	47	1,121	1,074	
-L- 16+88.63	21+05	41	347	306	
	SUBTOTAL	41	347	306	
	SUBTOTAL	88	1,468	1,380	
TOTAL		88	1,468	1,380	
MATERIAL FOR SHOULDER CONSTRUCTION			352	352	
LOSS DUE TO CLEARING & GRUBBING					
WASTE IN LIEU OF BORROW					
PROJECT TOTAL		88	1,820	1,732	
EST. 5% TO REPLACE TOP SOIL ON BORROW PIT				87	
GRAND TOTALS:		88		1,819	
SAY:		100		1,950	

Earthwork quantities are calculated by the Roadway Design Unit. These earthwork quantities are based in part on subsurface data provided by the Geotechnical Engineering Unit.

SUMMARY OF EXISTING ASPHALT PAVEMENT REMOVAL

SURVEY LINE	STATION	STATION	LOCATION LT/RT/CL	YD³
L	14+00	15+90	CL	507
L	16+82	17+50	CL	181
			TOTAL:	688
			SAY:	690

SHOULDER BERM GUTTER SUMMARY

SURVEY LINE	STATION	STATION	LENGTH
L (RT SIDE)	16+99.50	17+10	10.5
			TOTAL:	10.5
			SAY:	11

"N" = DISTANCE FROM EDGE OF LANE TO FACE OF GUARDRAIL.
TOTAL SHOULDER WIDTH = DISTANCE FROM EDGE OF TRAVEL LANE TO SHOULDER BREAK POINT.
FLARE LENGTH = DISTANCE FROM LAST SECTION OF PARALLEL GUARDRAIL TO END OF GUARDRAIL.
W = TOTAL WIDTH OF FLARE FROM BEGINNING OF TAPER TO END OF GUARDRAIL.
G = GATING IMPACT ATTENUATOR TYPE 350
NG = NON-GATING IMPACT ATTENUATOR TYPE 350

GUARDRAIL SUMMARY

SURVEY LINE	BEG. STA.	END STA.	LOCATION	LENGTH			WARRANT POINT		"N" DIST. FROM E.O.L.	TOTAL SHOUL. WIDTH	FLARE LENGTH		W		ANCHORS									IMPACT ATTENUATOR TYPE 350			SINGLE FACED CONCRETE BARRIER	REMOVE EXISTING GUARDRAIL	REMOVE AND STOCKPILE EXISTING GUARDRAIL	REMARKS
				STRAIGHT	SHOP CURVED	DOUBLE FACED	APPROACH END	TRAILING END			APPROACH END	TRAILING END	APPROACH END	TRAILING END	XI MOD	XI	GRAU 350	M-350	TYPE III	CAT-1	VI MOD	BIC	AT-1	EA	G	NG				
L	14+93.75	15+87.50	LT	93.75				15+87.50				50		1			1		1											
L	14+93.75	15+87.50	RT	93.75			15+87.50				50		1				1		1											
L	16+87.50	17+81.25	LT	93.75			16+87.50				50		1				1		1											
L	16+87.50	17+81.25	RT	93.75				16+87.50				50		1			1		1											
		SUBTOTAL		375.00													4		4											
		LESS ANCHOR DEDUCTIONS																												
		GRAU-350 4 @ 50'		-200.00																										
		TYPE **III** 4 @ 18.75'		-75.00																										
		TOTAL		100.00													4		4											
		SAY		100.00			**5 ADDITIONAL GUARDRAIL POSTS**										4		4											

10/27/2016
R:\Roadway\Proj\B5749_Rdy_sum.dgn
USER:NWF

COMPUTED BY: _____ DATE: _____
CHECKED BY: BAW DATE: 12/7/15

PROJECT REFERENCE NO.	SHEET NO.
B-5749	3D-1

STATE OF NORTH CAROLINA
DIVISION OF HIGHWAYS

LIST OF PIPES, ENDWALLS, ETC. (FOR PIPES 48" & UNDER)

STATION / SIZE / THICKNESS OR GAUGE	LOCATION (LT,RT, OR CL)	STRUCTURE NO. FROM	STRUCTURE NO. TO	TOP ELEVATION	INVERT ELEVATION	INVERT ELEVATION	SLOPE CRITICAL	DRAINAGE PIPE (RCP, CSP, CAAP, HDPE, or PVC) 12"	15"	18"	24"	30"	36"	42"	48"	DO NOT USE RCP	DO NOT USE CSP	DO NOT USE CAAP	DO NOT USE HDPE	C.S. PIPE 12"	15"	18"	24"	30"	36"	42"	48"	R.C. PIPE CLASS III 12"	15"	18"	24"	30"	36"	42"	48"	R.C. PIPE CLASS IV 12"	15"	18"	24"	30"	36"	42"	48"
																				.064	.064	.064	.064	.079	.079	.109	.109																
17+02	RT	0400		210.6	208.4																																						
		0400	0401		208.4	202.7															28																						
17+02	RT	0401			202.7																																						
TOTALS																					28																						

STATION / SIZE / THICKNESS OR GAUGE	*** R.C. PIPE (CLASS V)	**** RC PIPE CULVERTS, CONTRACTOR DESIGN	15" SIDE DRAIN PIPE	18" SIDE DRAIN PIPE	ENDWALLS STD. 838.01, STD. 838.11 OR STD. 838.80 (UNLESS NOTED OTHERWISE) CU. YDS. R.C.P.	CU. YDS. C.S.P.	QUANTITIES FOR DRAINAGE STRUCTURES * TOTAL L.F. FOR PAY QUANTITY SHALL BE COL. 'A' + (1.3 X COL.'B') LIN. FT. PER EACH (0' THRU 5.0')	LIN. FT. A 5.0' THRU 10.0'	LIN. FT. B 10.0' AND ABOVE	C.B. STD. 840.01 OR STD. 840.02	FRAME, GRATES AND HOOD STANDARD 840.03 TYPE OF GRATE E	F	G		CONCRETE TRANSITIONAL SECTION DROP INLET	CATCH BASIN			G.D.I. TYPE "B" STD. 840.18 OR 840.27	T.B.D.I. STD. 840.35	G.D.I. FRAME WITH TWO N.S. SAG GRATES STD. 840.24	G.D.I. FRAME WITH TWO N.S. FLAT GRATES STD. 840.29									DRAINAGE PIPE ELBOWS NO. & SIZE	CONC. & BRICK PIPE PLUG, C.Y. STD. 840.71	CONC. COLLARS CL. "B" C.Y. STD 840.72	PIPE REMOVAL LIN.FT.	REMARKS
17+02							1										1		1																								
TOTALS							1										1		1																								

ABBREVIATIONS

C.B.	CATCH BASIN
N.D.I.	NARROW DROP INLET
D.I.	DROP INLET
G.D.I.	GRATED DROP INLET
G.D.I. (N.S.)	GRATED DROP INLET (NARROW SLOT)
J.B.	JUNCTION BOX
M.H.	MANHOLE
T.B.D.I.	TRAFFIC BEARING DROP INLET
T.B.J.B.	TRAFFIC BEARING JUNCTION BOX

10/27/2016
R:\Roadway\Proj\B5749_Rdy_sum.dgn
LISTFNAME

4/04/06

DocuSign Envelope ID: 2CDFDB12-5201-45A1-AF97-162A6D4D4CD1

CH ENGINEERING
3220 GLEN ROYAL RD. RALEIGH, NC 27617
TELE 919.788.0224 FAX 919.788.0232
NC LICENSE #P-0189

PROJECT REFERENCE NO.	SHEET NO.
B-5749	4
R/W SHEET NO.	

ROADWAY DESIGN ENGINEER
11/3/2016
NORTH CAROLINA PROFESSIONAL SEAL 16689 ENGINEER BRIAN A. WILES
DocuSigned by: Brian A Wiles
CERTIFIED AS OF DATE

HYDRAULICS ENGINEER
NORTH CAROLINA PROFESSIONAL SEAL 31025 ENGINEER KAREN HEFNER
DocuSigned by: Karen Hefner
11/3/2016
CERTIFIED AS OF DATE

DOCUMENT NOT CONSIDERED FINAL UNLESS ALL SIGNATURES COMPLETED

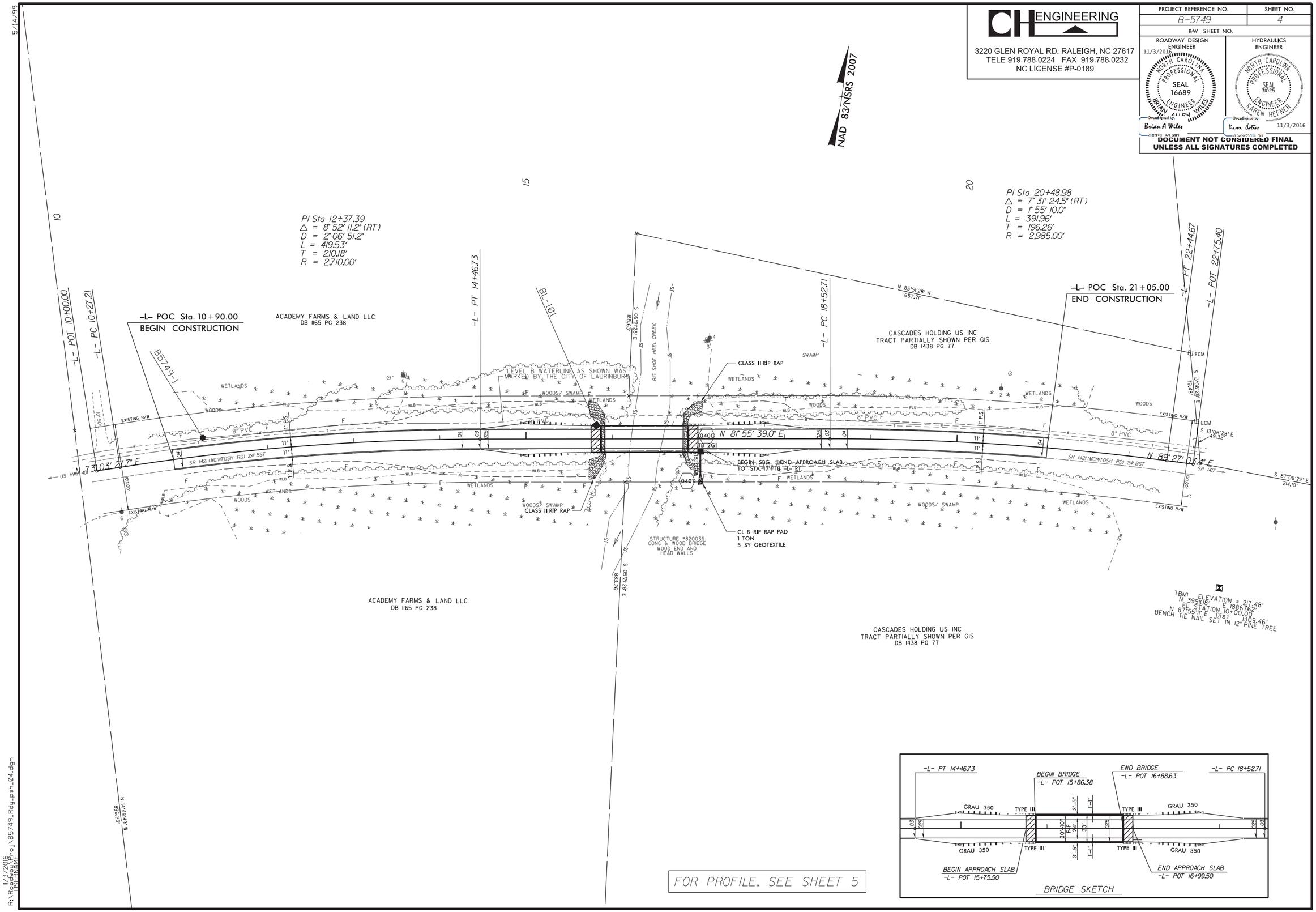

FOR PROFILE, SEE SHEET 5

R:\Roadway\Proj\B5749_Rdy_psh_04.dgn
11/3/2016
11:58:19 AM

DocuSign Envelope ID: 2CDFDB12-5201-45A1-AF97-162A6D4D4CD1

5/14/99

CH ENGINEERING
3220 GLEN ROYAL RD. RALEIGH, NC 27617
TELE 919.788.0224 FAX 919.788.0232
NC LICENSE #P-0189

PROJECT REFERENCE NO.	SHEET NO.
B-5749	5

ROADWAY DESIGN ENGINEER
11/3/2016
NORTH CAROLINA PROFESSIONAL SEAL 16689 ENGINEER BRIAN ALLEN WILES
DocuSigned by: Brian A Wiles
11/3/2016

HYDRAULICS ENGINEER
NORTH CAROLINA PROFESSIONAL SEAL 31025 ENGINEER KAREN HEFNER
DocuSigned by: Karen Hefner
11/3/2016

DOCUMENT NOT CONSIDERED FINAL UNLESS ALL SIGNATURES COMPLETED

BRIDGE HYDRAULIC DATA

DESIGN DISCHARGE	=	1200	CFS
DESIGN FREQUENCY	=	25	YRS
DESIGN HW ELEVATION	=	205.1	FT
BASE DISCHARGE	=	1700	CFS
BASE FREQUENCY	=	100	YRS
BASE HW ELEVATION	=	205.91	FT
OVERTOPPING DISCHARGE	=	4195	CFS
OVERTOPPING FREQUENCY	=	500+	YRS
OVERTOPPING ELEVATION	=	209.51	FT
DATE OF SURVEY	=	2-2-16	
W.S. ELEVATION AT DATE OF SURVEY	=	202.84	FT

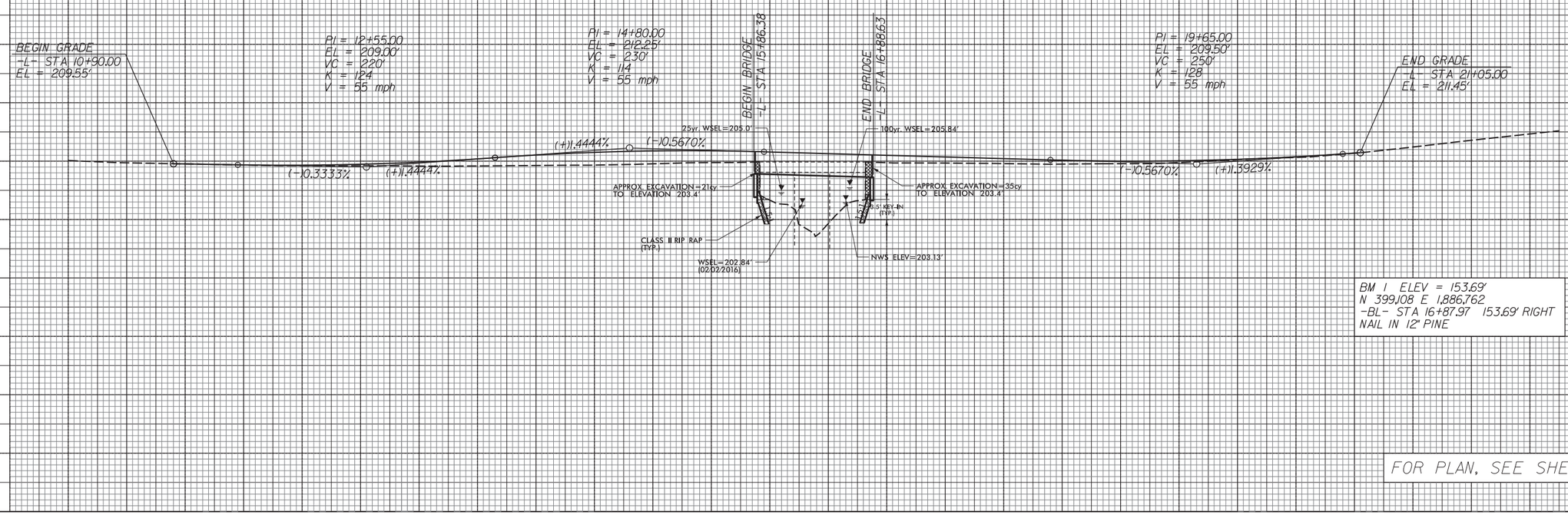

BM 1 ELEV = 153.69'
N 399,108 E 1,886,762
-BL- STA 16+87.97 153.69' RIGHT
NAIL IN 12" PINE

FOR PLAN, SEE SHEET 4

11/3/2016
R:\Roadway\Proj\B5749_Rdy_pf1_05.dgn
USERNAME

PROJ. REFERENCE NO.	SHEET NO.
B-5749	TMP-1

THE FOLLOWING ROADWAY STANDARDS AS APPEAR IN "ROADWAY STANDARD DRAWINGS" - PROJECT SERVICES UNIT - N.C. DEPARTMENT OF TRANSPORTATION - RALEIGH, N.C., DATED JANUARY 2012 ARE APPLICABLE TO THIS PROJECT AND BY REFERENCE HEREBY ARE CONSIDERED A PART OF THESE PLANS:

STD.	TITLE
1101.03	TEMPORARY ROAD CLOSURES
1110.01	STATIONARY WORK ZONE SIGNS
1145.01	BARRICADES
1205.01	PAVEMENT MARKINGS - LINE TYPES AND OFFSETS
1205.12	PAVEMENT MARKINGS - BRIDGES
1250.01	RAISED PAVEMENT MARKERS - INSTALLATION SPACING
1251.01	RAISED PAVEMENT MARKERS - TYPES AND MOUNTING
1261.01	GUARDRAIL AND BARRIER DELINEATORS - INSTALLATION SPACING
1261.02	GUARDRAIL AND BARRIER DELINEATORS - TYPES AND MOUNTING
1262.01	GUARDRAIL END DELINEATION

GENERAL NOTES

CHANGES MAY BE REQUIRED WHEN PHYSICAL DIMENSIONS IN THE DETAIL DRAWINGS, STANDARD DETAILS, AND ROADWAY DETAILS ARE NOT ATTAINABLE TO MEET FIELD CONDITIONS OR RESULT IN DUPLICATE OR UNDESIRED OVERLAPPING OF DEVICES. MODIFICATION MAY INCLUDE: MOVING, SUPPLEMENTING, COVERING, OR REMOVAL OF DEVICES AS DIRECTED BY THE ENGINEER.

THE FOLLOWING GENERAL NOTES APPLY AT ALL TIMES FOR THE DURATION OF THE CONSTRUCTION PROJECT EXCEPT WHEN OTHERWISE NOTED IN THE PLAN OR DIRECTED BY THE ENGINEER.

TRAFFIC PATTERN ALTERATIONS

A) NOTIFY THE ENGINEER TWENTY ONE (21) CALENDAR DAYS PRIOR TO ANY TRAFFIC PATTEN ALTERATION.

SIGNING

B) PROVIDE SIGNING AND DEVICES REQUIRED TO CLOSE THE ROAD ACCORDING TO THE ROADWAY STANDARD DRAWINGS AND TRAFFIC CONTROL PLANS.

PROVIDE SIGNING REQUIRED FOR THE OFF-SITE DETOUR ROUTE AS SHOWN IN THE TRAFFIC CONTROL PLANS.

C) COVER OR REMOVE ALL SIGNS AND DEVICES REQUIRED TO CLOSE THE ROAD WHEN ROAD CLOSURE IS NOT IN OPERATION.

COVER OR REMOVE ALL SIGNS REQUIRED FOR THE OFF-SITE DETOUR WHEN THE DETOUR IS NOT IN OPERATION.

D) ENSURE ALL NECESSARY SIGNING IS IN PLACE PRIOR TO ALTERING ANY TRAFFIC PATTERN.

TRAFFIC CONTROL DEVICES

E) PLACE TYPE III BARRICADES, WITH "ROAD CLOSED" SIGN R11-2 ATTACHED, OF SUFFICIENT LENGTH TO CLOSE ENTIRE ROADWAY.

PAVEMENT MARKINGS AND MARKERS

F) INSTALL PAVEMENT MARKINGS ON THE FINAL SURFACE.

PHASING

STEP 1: USING ROADWAY STANDARD DRAWING NUMBER 1101.03, SHEET 1 OF 9, AND TMP-2, PERFORM THE FOLLOWING:
- INSTALL ALL ROAD CLOSURE AND DETOUR SIGNING INCLUDING BARRICADES
- CLOSE SR 1421 (McINTOSH ROAD)
- PLACE TRAFFIC ONTO OFF-SITE DETOUR

STEP 2: REMOVE EXISTING BRIDGE #036 AND CONSTRUCT THE PROPOSED BRIDGE AND APPROACHES AS SHOWN IN THE CONSTRUCTION PLANS.

STEP 3: INSTALL FINAL PAVEMENT MARKINGS.

STEP 4: REMOVE ALL TRAFFIC CONTROL SIGNING AND DEVICES AND RE-OPEN SR 1421 (McINTOSH ROAD) TO THE FINAL TRAFFIC PATTERN.

PAVEMENT MARKING

THERMOPLASTIC PAVEMENT MARKING LINES (4", 90 MILS)	1500 LF
THERMOPLASTIC PAVEMENT MARKING LINES (4", 120 MILS)	1500 LF
PERMANENT RAISED PAVEMENT MARKERS	10 EACH

APPROVED: Brian A Wiles
DATE: 11/3/2016
SEAL

NORTH CAROLINA PROFESSIONAL SEAL 16689 ENGINEER BRIAN ALLEN WILES

DOCUMENT NOT CONSIDERED FINAL UNLESS ALL SIGNATURES COMPLETED

DIVISION OF HIGHWAYS • STATE OF NORTH CAROLINA • DEPARTMENT OF TRANSPORTATION • WORK ZONE TRAFFIC CONTROL

TRANSPORTATION OPERATIONS PLAN

11/3/2016
R:\Traffic\TrafficControl\TCP\B5749_TC_TMP.dgn
USERNAME:

PROJ. REFERENCE NO.	SHEET NO.
B-5749	TMP-2

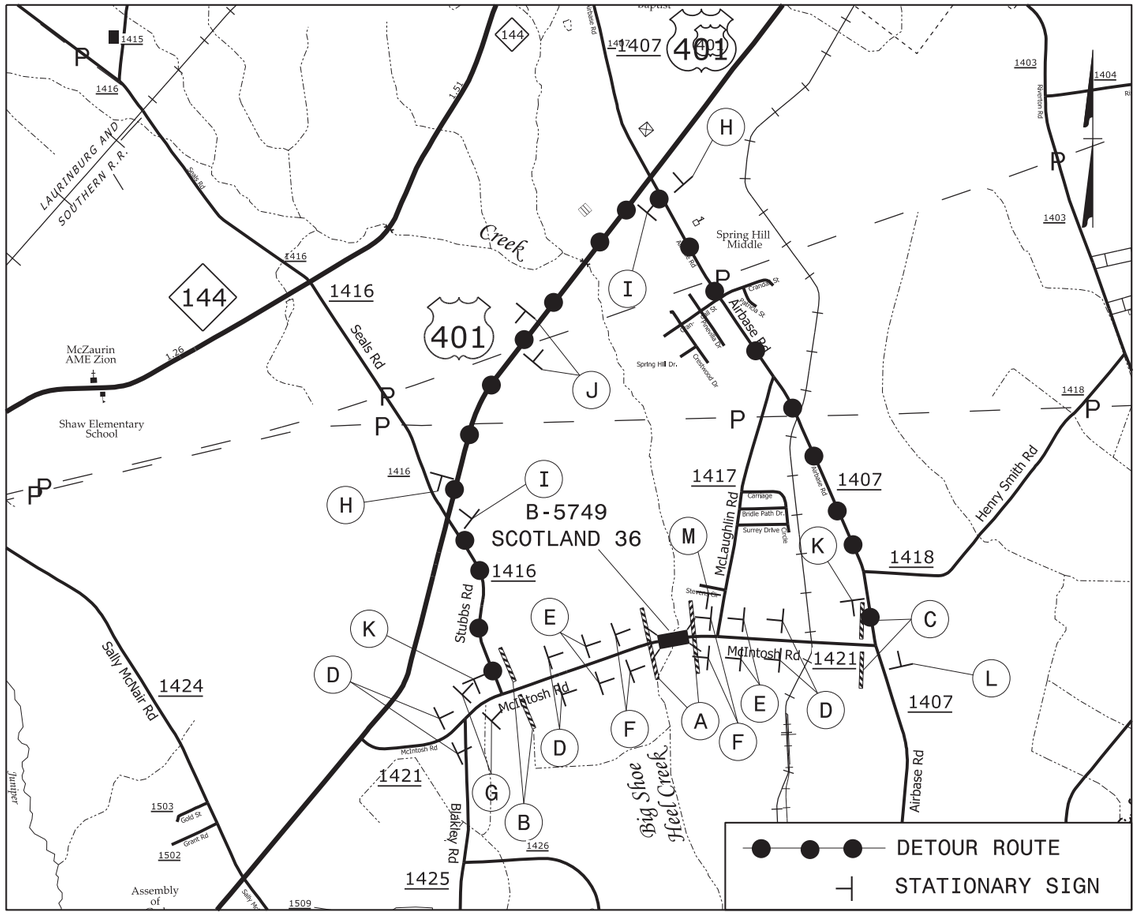

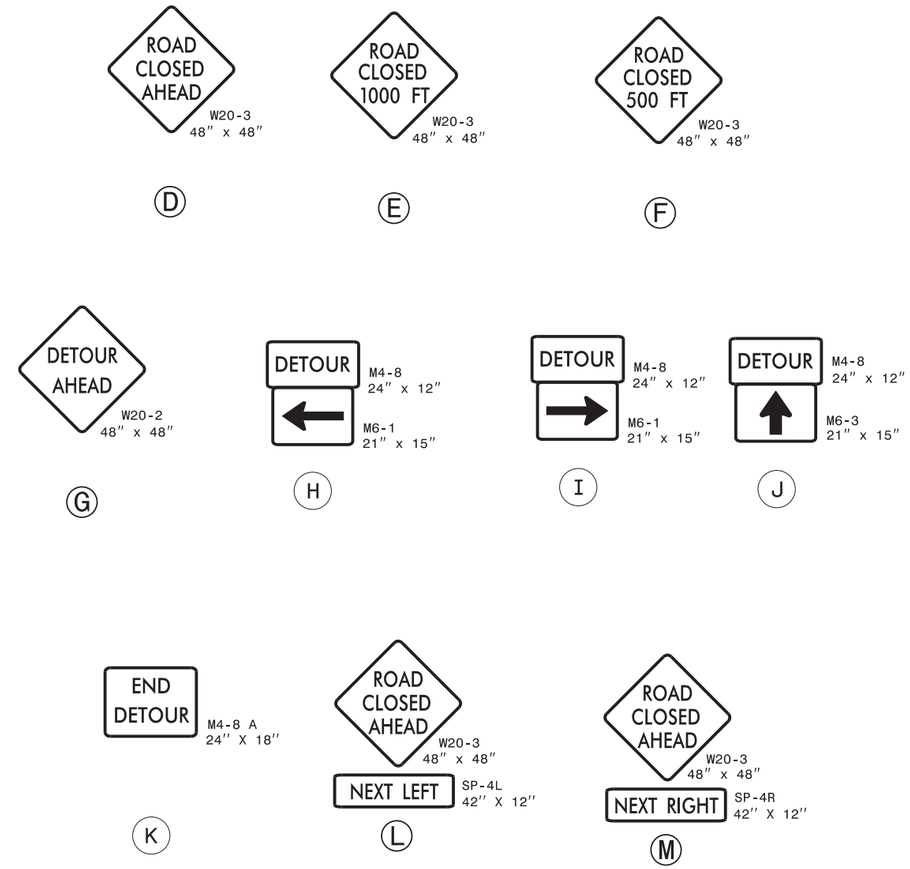

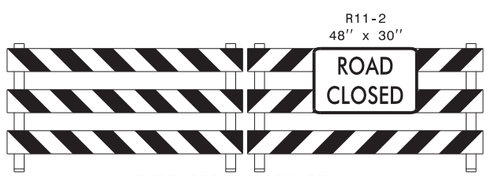

TYPE III BARRICADE(S)

A

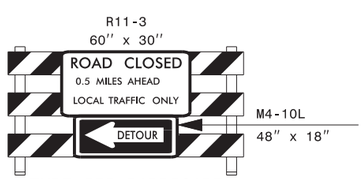

TYPE III BARRICADE

B

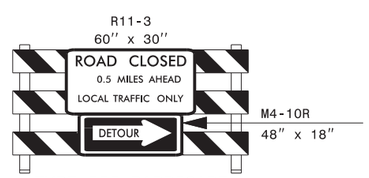

TYPE III BARRICADE

C

APPROVED: Brian A Wiles

DATE: 11/3/2016

SEAL

NORTH CAROLINA PROFESSIONAL SEAL 16689 ENGINEER BRIAN ALLEN WILES

DOCUMENT NOT CONSIDERED FINAL UNLESS ALL SIGNATURES COMPLETED

DIVISION OF HIGHWAYS · STATE OF NORTH CAROLINA · DEPARTMENT OF TRANSPORTATION · WORK ZONE TRAFFIC CONTROL

DETOUR ROUTE AND SIGNS

11/3/2016
R:\Traffic\TrafficControl\TCP\B5749_TC_TMP.dgn
USERNAME

TIP PROJECT: B–5749

STATE	STATE PROJECT REFERENCE NO.	SHEET NO.	TOTAL SHEETS
N.C.	B-5749	EC-1	

STATE PROJ. NO.	F. A. PROJ. NO.	DESCRIPTION

STATE OF NORTH CAROLINA
DIVISION OF HIGHWAYS

PLAN FOR PROPOSED
HIGHWAY EROSION CONTROL

SCOTLAND COUNTY

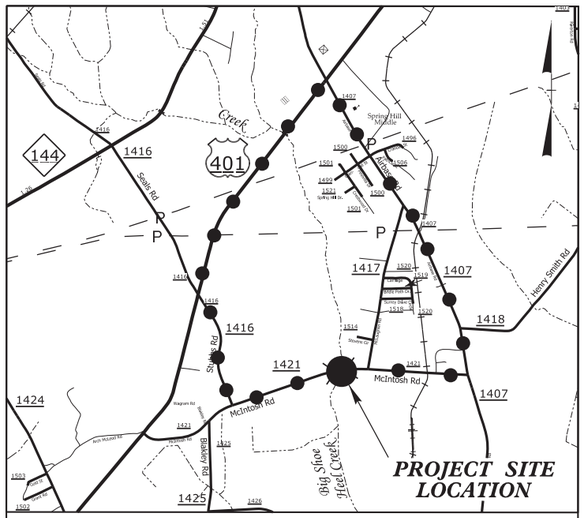

VICINITY MAP

OFF-SITE DETOUR ROUTE

N.T.S.

RW Plans 07/01/2016

LOCATION: BRIDGE NO. 820036 ON SR 1421 (MCINTOSH ROAD) OVER BIG SHOE HEEL CREEK

TYPE OF WORK: GRADING, DRAINAGE, PAVING AND STRUCTURE

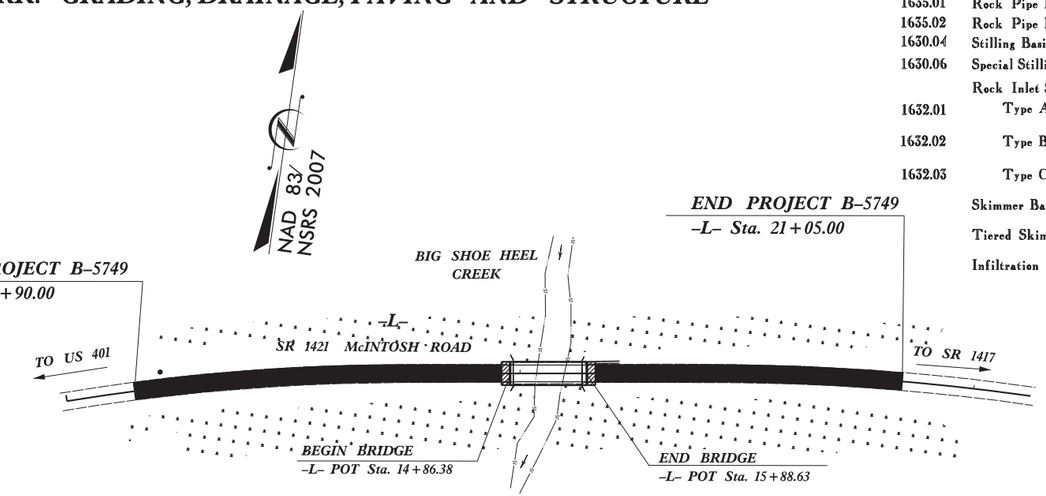

EROSION AND SEDIMENT CONTROL MEASURES

Std. #	Description	Symbol
1630.03	Temporary Silt Ditch	TSD
1630.05	Temporary Diversion	TD
1605.01	Temporary Silt Fence	
1606.01	Special Sediment Control Fence	
1622.01	Temporary Berms and Slope Drains	
1630.02	Silt Basin Type B	
1633.01	Temporary Rock Silt Check Type-A	
	Temporary Rock Silt Check Type-A with Matting and Polyacrylamide (PAM)	
1633.02	Temporary Rock Silt Check Type-B	
	Wattle / Coir Fiber Wattle	EW CFW
	Wattle / Coir Fiber Wattle with Polyacrylamide (PAM)	
1634.01	Temporary Rock Sediment Dam Type-A	
1634.02	Temporary Rock Sediment Dam Type-B	
1635.01	Rock Pipe Inlet Sediment Trap Type-A	
1635.02	Rock Pipe Inlet Sediment Trap Type-B	
1630.04	Stilling Basin	
1630.06	Special Stilling Basin	
	Rock Inlet Sediment Trap:	
1632.01	Type A	A
1632.02	Type B	B
1632.03	Type C	C
	Skimmer Basin	
	Tiered Skimmer Basin	
	Infiltration Basin	

THIS PROJECT CONTAINS EROSION CONTROL PLANS FOR CLEARING AND GRUBBING PHASE OF CONSTRUCTION.

GRAPHIC SCALE

50 0 100
PLANS

50 0 100
PROFILE (HORIZONTAL)

10 0 20
PROFILE (VERTICAL)

THESE EROSION AND SEDIMENT CONTROL PLANS COMPLY WITH THE REGULATIONS SET FORTH BY THE NCG–010000 GENERAL CONSTRUCTION PERMIT EFFECTIVE AUGUST 3, 2011 AND ISSUED BY THE NORTH CAROLINA DEPARTMENT OF ENVIRONMENT AND NATURAL RESOURCES DIVISION OF WATER RESOURCES.

Prepared in the Office of:

MI ENGINEERING

1011 SCHAUB DRIVE, SUITE 100
RALEIGH, NC 27606

Designed by:

KAREN HEFNER, PE ***3824***
NAME *LEVEL III CERTIFICATION NO.*

Reviewed in the Office of:

ROADSIDE ENVIRONMENTAL UNIT

1 South Wilmington St.
Raleigh, NC 27611

2012 STANDARD SPECIFICATIONS

Reviewed by:

NOELLE RING

Roadway Standard Drawings

The following roadway english standards as appear in "Roadway Standard Drawings"– Roadway Design Unit – N. C. Department of Transportation – Raleigh, N. C., dated January 2012 and the latest revison thereto are applicable to this project and by reference hereby are considered a part of these plans.

1604.01	Railroad Erosion Control Detail	1632.01	Rock Inlet Sediment Trap Type A
1605.01	Temporary Silt Fence	1632.02	Rock Inlet Sediment Trap Type B
1606.01	Special Sediment Control Fence	1632.03	Rock Inlet Sediment Trap Type C
1607.01	Gravel Construction Entrance	1633.01	Temporary Rock Silt Check Type A
1622.01	Temporary Berms and Slope Drains	1633.02	Temporary Rock Silt Check Type B
1630.01	Riser Basin	1634.01	Temporary Rock Sediment Dam Type A
1630.02	Silt Basin Type B	1634.02	Temporary Rock Sediment Dam Type B
1630.03	Temporary Silt Ditch	1635.01	Rock Pipe Inlet Sediment Trap Type A
1630.04	Stilling Basin	1635.02	Rock Pipe Inlet Sediment Trap Type B
1630.05	Temporary Diversion	1640.01	Coir Fiber Baffle
1630.06	Special Stilling Basin	1645.01	Temporary Stream Crossing
1631.01	Matting Installation		

$$$$$$SYSTIME$$$$$$
$$$$$$USERID$$$$$$
$$$$$$USERNAME$$$$$$

PROJECT REFERENCE NO.	SHEET NO.
B-5749	EC-2
R/W SHEET NO.	4
ROADWAY DESIGN ENGINEER	HYDRAULICS ENGINEER

WATTLE BARRIER DETAIL

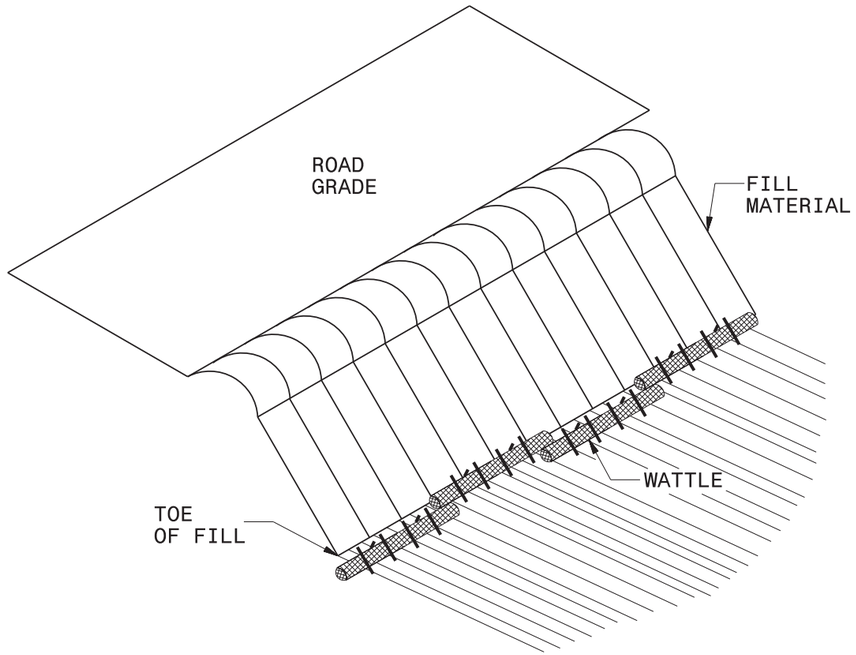

ISOMETRIC VIEW

NOTES:

USE MINIMUM 18 IN. NOMINAL DIAMETER EXCELSIOR WATTLE AND LENGTH OF 10 FT.

EXCAVATE A 2 TO 3 INCH TRENCH FOR WATTLE TO BE PLACED.

DO NOT PLACE WATTLES ON TOE OF SLOPE.

USE 2 FT. WOODEN STAKES WITH A 2 IN. BY 2 IN. NOMINAL CROSS SECTION.

INSTALL A MINIMUM OF 2 UPSLOPE STAKES AND 4 DOWNSLOPE STAKES AT AN ANGLE TO WEDGE WATTLE TO GROUND.

PROVIDE STAPLES MADE OF 0.125 IN. DIAMETER STEEL WIRE FORMED INTO A U SHAPE NOT LESS THAN 12″ IN LENGTH.

INSTALL STAPLES APPROXIMATELY EVERY 1 LINEAR FOOT ON BOTH SIDES OF WATTLE AND AT EACH END TO SECURE IT TO THE SOIL.

FOR BREAKS ALONG LARGE SLOPES, USE MAXIMUM SPACING OF 25 FT.

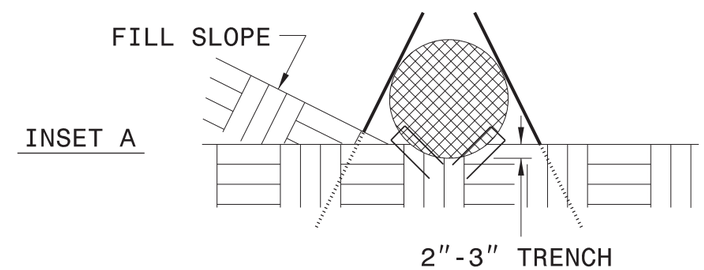

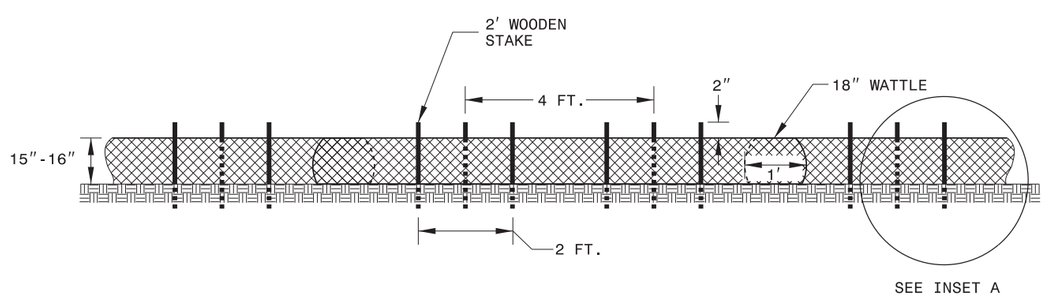

FRONT VIEW

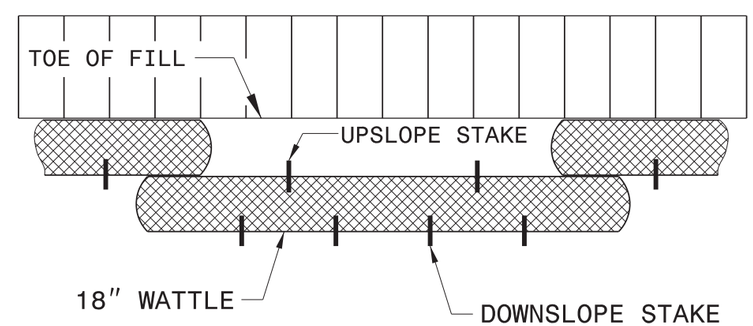

TOP VIEW

PROJECT REFERENCE NO.	SHEET NO.
B-5749	EC-3
ROADWAY DESIGN ENGINEER	HYDRAULICS ENGINEER

DIVISION OF HIGHWAYS
STATE OF NORTH CAROLINA

SOIL STABILIZATION TIMEFRAMES

SITE DESCRIPTION	STABILIZATION TIME	TIMEFRAME EXCEPTIONS
PERIMETER DIKES, SWALES, DITCHES AND SLOPES	7 DAYS	NONE
HIGH QUALITY WATER (HQW) ZONES	7 DAYS	NONE
SLOPES STEEPER THAN 3:1	7 DAYS	IF SLOPES ARE 10' OR LESS IN LENGTH AND ARE NOT STEEPER THAN 2:1, 14 DAYS ARE ALLOWED.
SLOPES 3:1 OR FLATTER	14 DAYS	7 DAYS FOR SLOPES GREATER THAN 50' IN LENGTH.
ALL OTHER AREAS WITH SLOPES FLATTER THAN 4:1	14 DAYS	NONE, EXCEPT FOR PERIMETERS AND HQW ZONES.

CLEARING & GRUBBING PLAN

PROJECT REFERENCE NO.	SHEET NO.
B-5749	EC-04/CONST.4
R/W SHEET NO.	4
ROADWAY DESIGN ENGINEER	HYDRAULICS ENGINEER

CLEARING AND GRUBBING
EROSION CONTROL FOR
CONSTRUCTION SHEET _4_

NOTE:
PLACE TEMPORARY ROCK SEDIMENT DAMS TYPE – B AND TEMPORARY ROCK SILT CHECKS TYPE – A AT DRAINAGE OUTLETS.

NOTE:
PERIMETER EROSION CONTROL MEASURES SHALL BE INSTALLED DURING CLEARING AND GRUBBING PHASE.

NOTE:
UTILIZE TEMPORARY SEDIMENT BASIN OR SPECIAL STILLING BASIN(S) AS STILLING BASIN WHERE APPLICABLE.

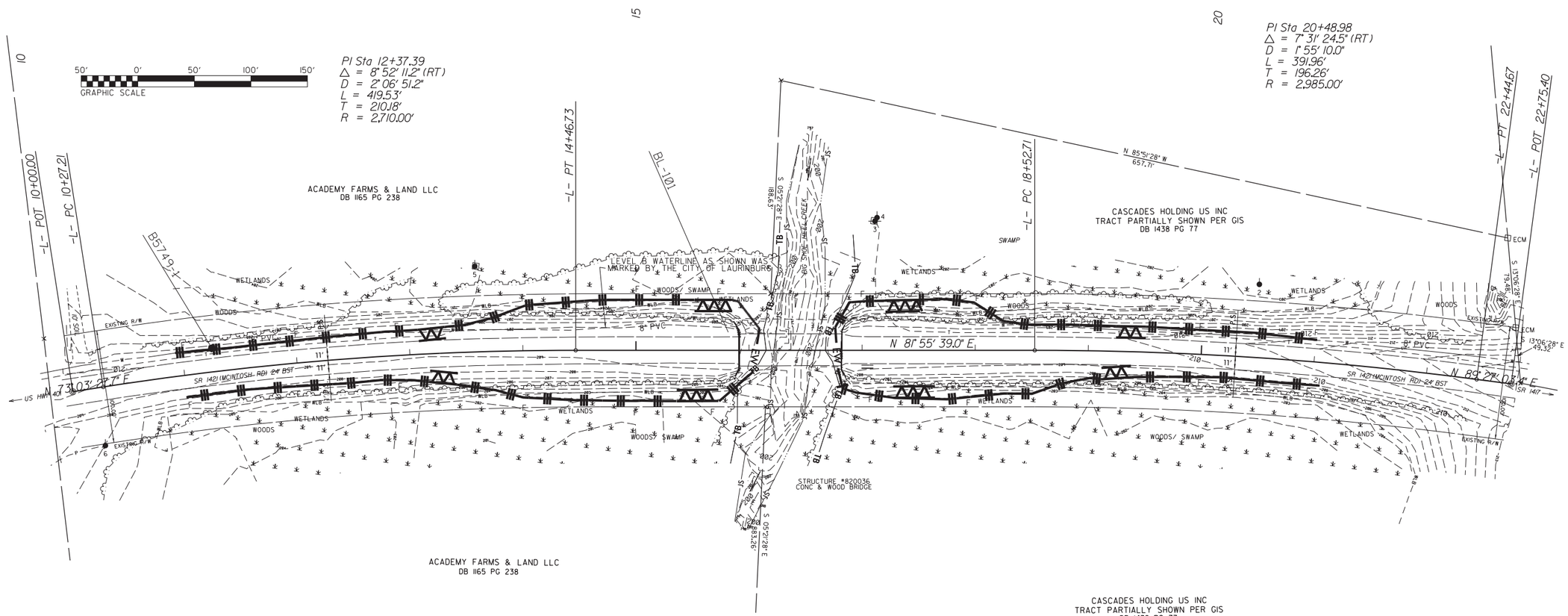

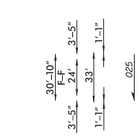

BRIDGE SKETCH

FOR PROFILE, SEE SHEET 5

5/14/99

$$$$$$$SYSTIME$$$$
$$$$$$$USERNAME$$$$DGN$$$$$$$$$$$$$$$$$$

FINAL GRADE PLAN

PROJECT REFERENCE NO.	SHEET NO.
B-5749	EC-05/CONST.04
R/W SHEET NO.	4
ROADWAY DESIGN ENGINEER	HYDRAULICS ENGINEER

NOTES: ANY DEVIATION FROM OPTIONS GIVEN WILL REQUIRE PRIOR APPROVAL BY ENGINEER.

ADDITIONAL EROSION CONTROL DEVICES MAY NEED TO BE INSTALLED AS DIRECTED BY THE ENGINEER.

NOTE:
PLACE TEMPORARY ROCK SEDIMENT DAMS TYPE – B AND TEMPORARY ROCK SILT CHECKS TYPE – A AT DRAINAGE OUTLETS.

INSTALL FILTRATION GEOTEXTILE UNDER TEMPORARY ROCK SILT CHECK(S) TYPE A IN PERMITTED WETLANDS.

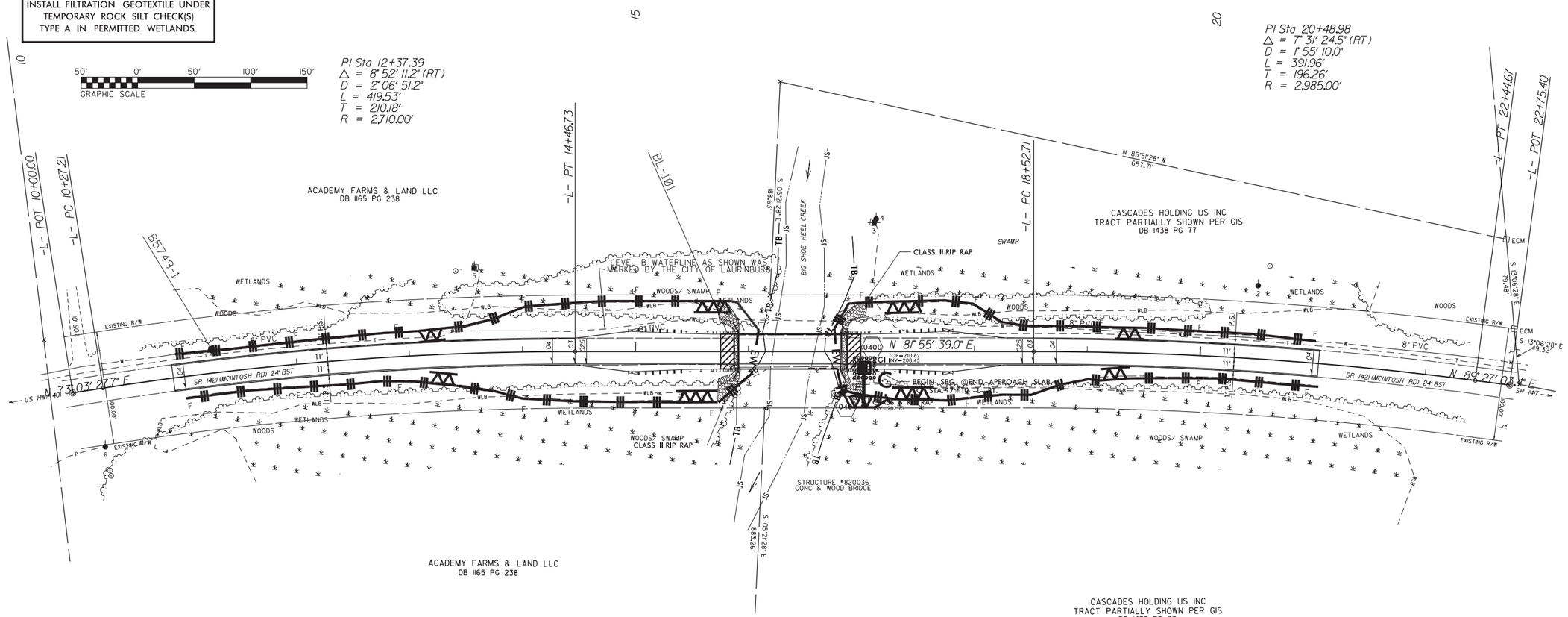

09/08/99

TIP PROJECT: B–5749

T.I.P. NO.	SHEET NO.
B–5749	UO–01

NOTE:
ALL UTILITY WORK SHOWN ON THIS SHEET IS DONE BY OTHERS.
NO PAYMENT WILL BE MADE TO THE CONTRACTOR FOR UTILITY WORK SHOWN ON THIS SHEET.

STATE OF NORTH CAROLINA
DIVISION OF HIGHWAYS

UTILITIES BY OTHERS PLANS
SCOTLAND COUNTY

LOCATION: BRIDGE NO. 820036 ON SR 1421 (MCINTOSH ROAD) OVER BIG SHOE HEEL CREEK

TYPE OF WORK: AERIAL & BURIED UTILITIES

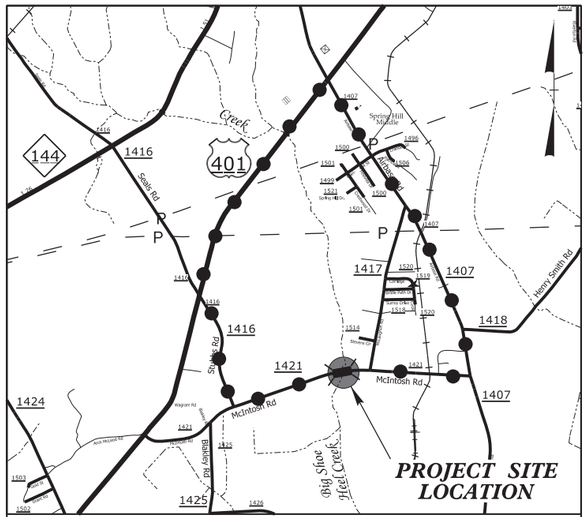

VICINITY MAP
OFF-SITE DETOUR ROUTE
N.T.S.

UO–02

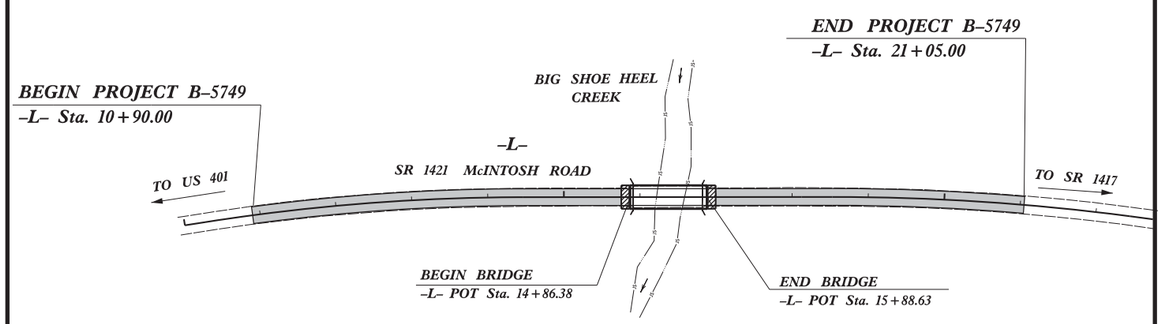

NAD 83/ NSRS 2007

GRAPHIC SCALES

50 25 0 50 100
PLANS

50 25 0 50 100
PROFILE (HORIZONTAL)

10 5 0 10 20
PROFILE (VERTICAL)

INDEX OF SHEETS

SHEET NO.:	DESCRIPTION:
UO–01	TITLE SHEET
UO–02	UBO PLAN SHEET

UTILITY OWNERS ON PROJECT

(A) DUKE ENERGY PROGRESS – POWER
(B) CITY OF LAURINBURG – WATER
(C) WINDSTREAM – TELEPHONE

PLANS PREPARED BY:
CH ENGINEERING
3220 GLEN ROYAL RD. RALEIGH, NC 27617
TELE 919.788.0224 FAX 919.788.0232
NC LICENSE #P-0189

UTILITIES PROJECT ENGINEER
Mary Jo Lee, P.E.

DIVISION OF HIGHWAYS
UTILITIES UNIT
1555 MAIL SERVICES CENTER
RALEIGH NC 27699–1555
PHONE (919) 707–6690
FAX (919) 250–4151

UTILITIES REGIONAL ENGINEER
UTILITIES ENGINEER
JAMIE YOW — UTILITIES AREA COORDINATOR
UTILITIES COORDINATOR

10/27/2016
R:\Utilities\Engineering\UBO\Proj\B5749_ut_tsh_U001_psh.dgn
USERNAME=

PROJECT REFERENCE NO.	SHEET NO.
B-5749	U0-02

UTILITIES BY OTHERS

NOTE:
ALL PROPOSED UTILITY WORK SHOWN ON THIS SHEET WILL BE DONE BY OTHERS. NO PAYMENT WILL BE MADE TO THE CONTRACTOR FOR PROPOSED UTILITY WORK SHOWN ON THIS SHEET.

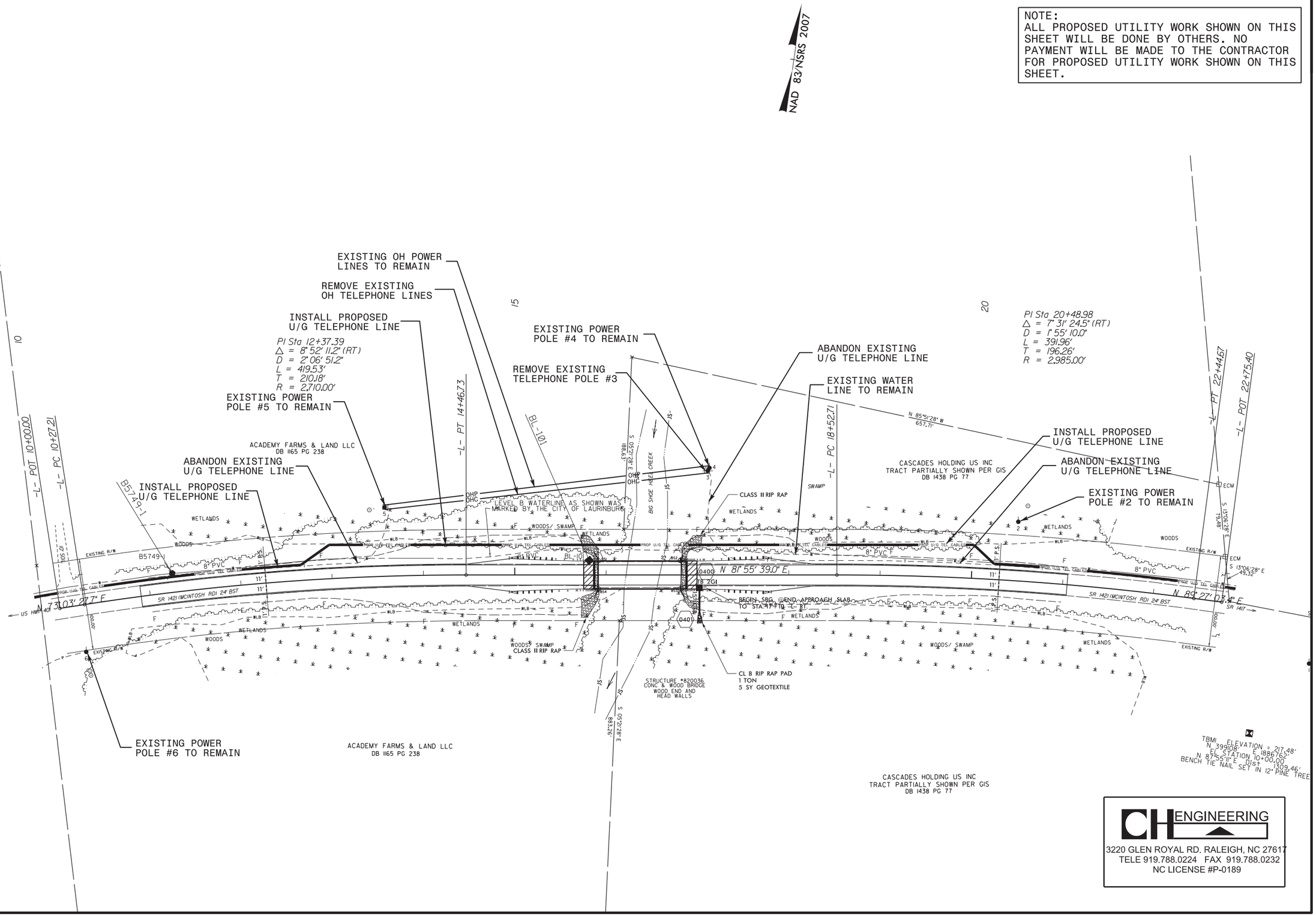

CH ENGINEERING
3220 GLEN ROYAL RD. RALEIGH, NC 27617
TELE 919.788.0224 FAX 919.788.0232
NC LICENSE #P-0189

5/14/99
10/27/2016
ities\Engineering\UBO\Proj\B5749_ut_rdy4_U002_psh.dgn
USERNAME

8/23/99

0 2.5 5	PROJ. REFERENCE NO.	SHEET NO.
	B-5749	X-1

DOCUMENT NOT CONSIDERED FINAL UNLESS ALL SIGNATURES COMPLETED

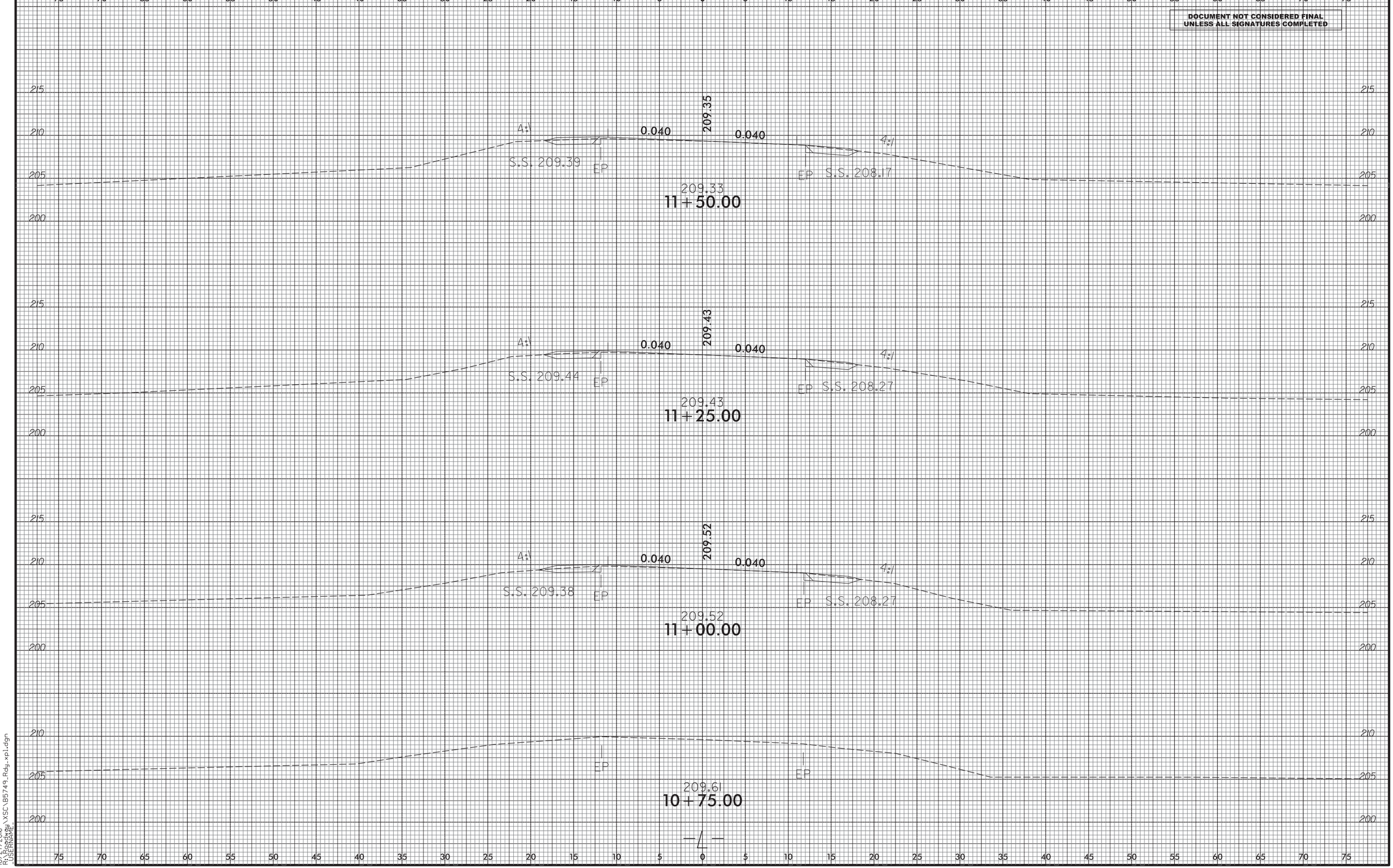

10/27/2016
R:\Roadway\XSC\B5749_Rdy_xpl.dgn
USERNAME=

8/23/99

0 2.5 5	PROJ. REFERENCE NO.	SHEET NO.
	B-5749	X-2

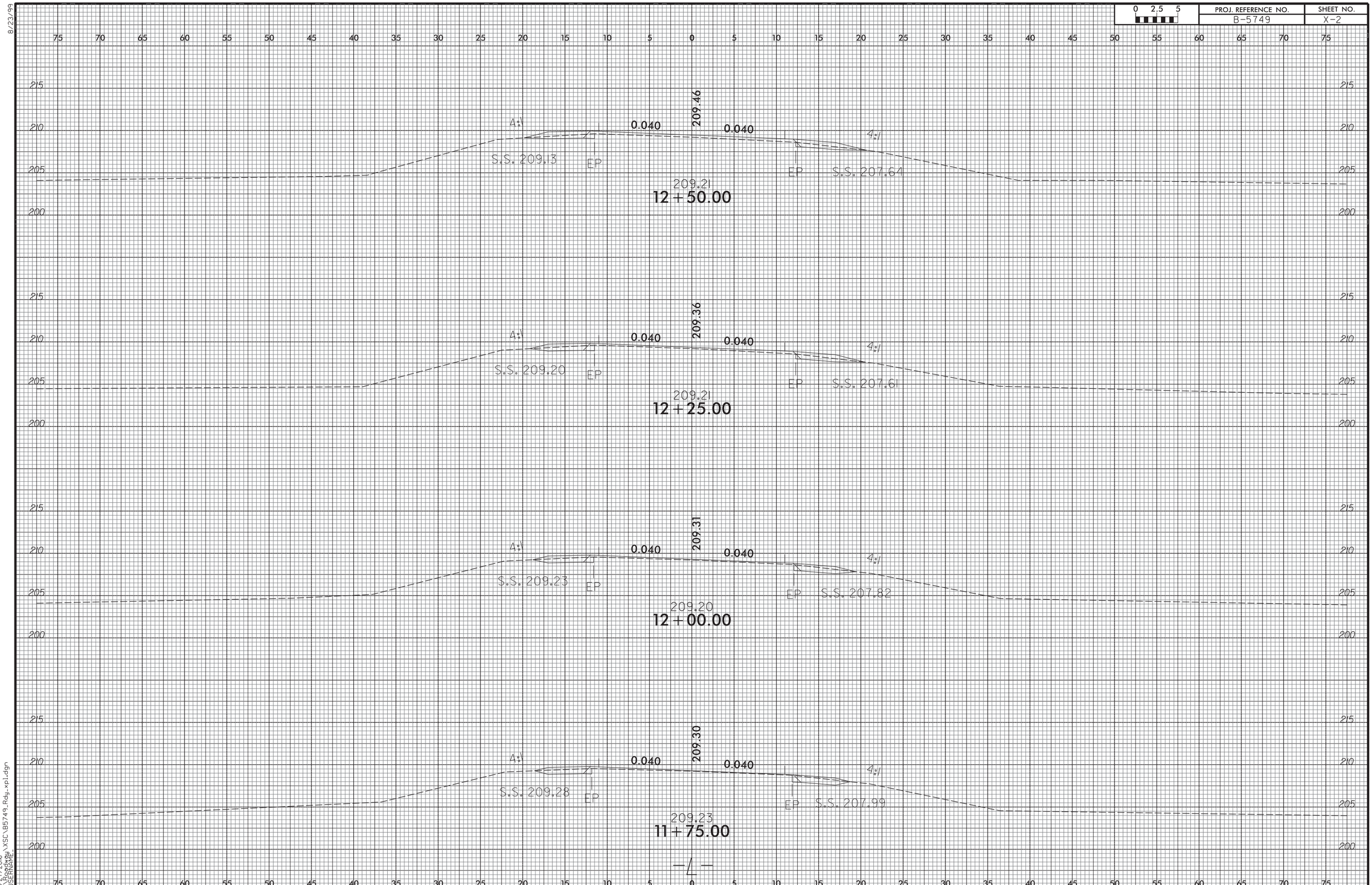

10/27/2016
R:\Roadway\XSC\B5749_Rdy_xpl.dgn
USERNAME=

0 2.5 5	PROJ. REFERENCE NO.	SHEET NO.
	B-5749	X-3

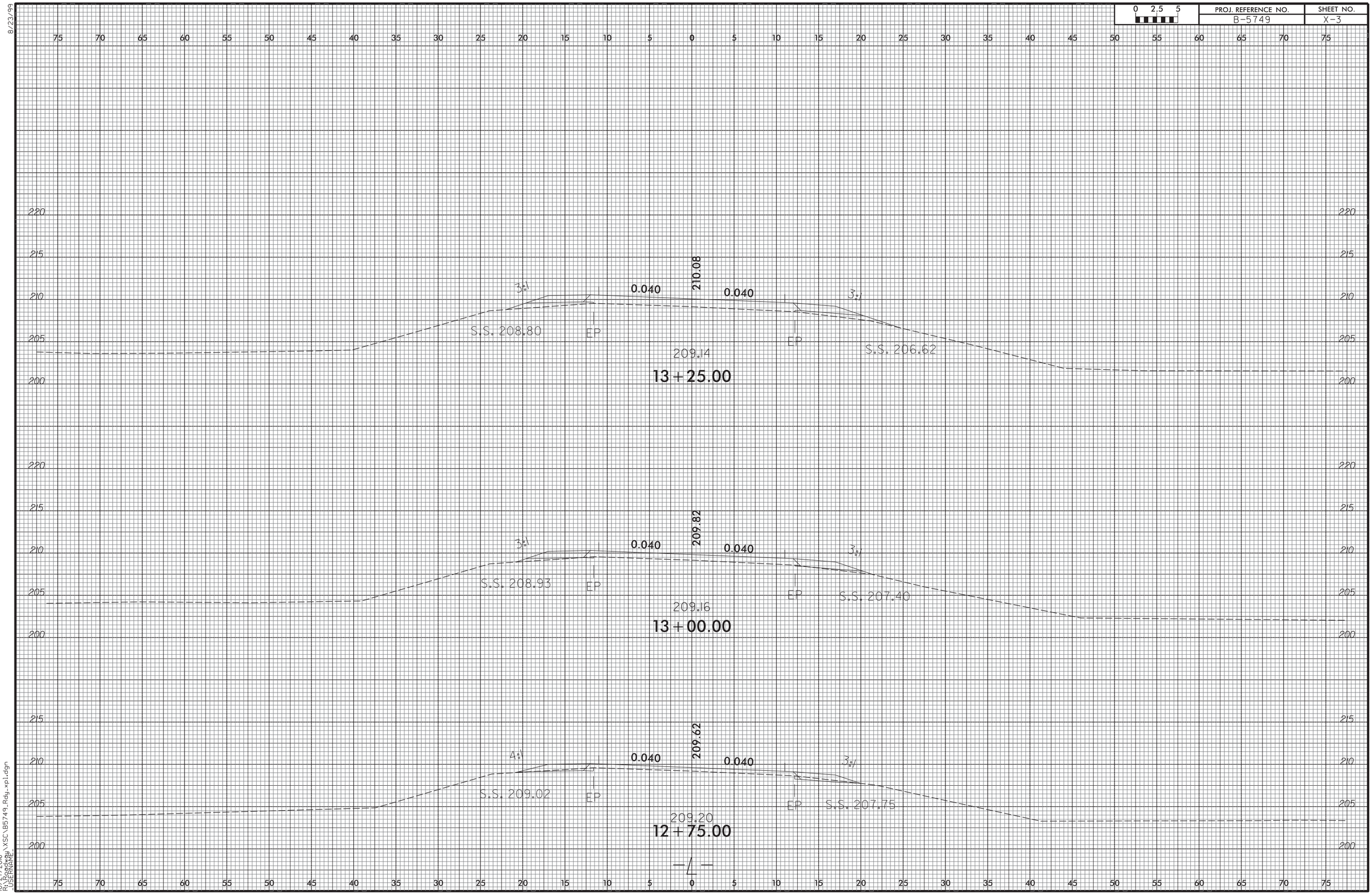

8/23/99

10/27/2016
R:\Roadway\XSC\B5749_Rdy_xpl.dgn
USERNAME=

8/23/99

0 2.5 5	PROJ. REFERENCE NO.	SHEET NO.
	B-5749	X-4

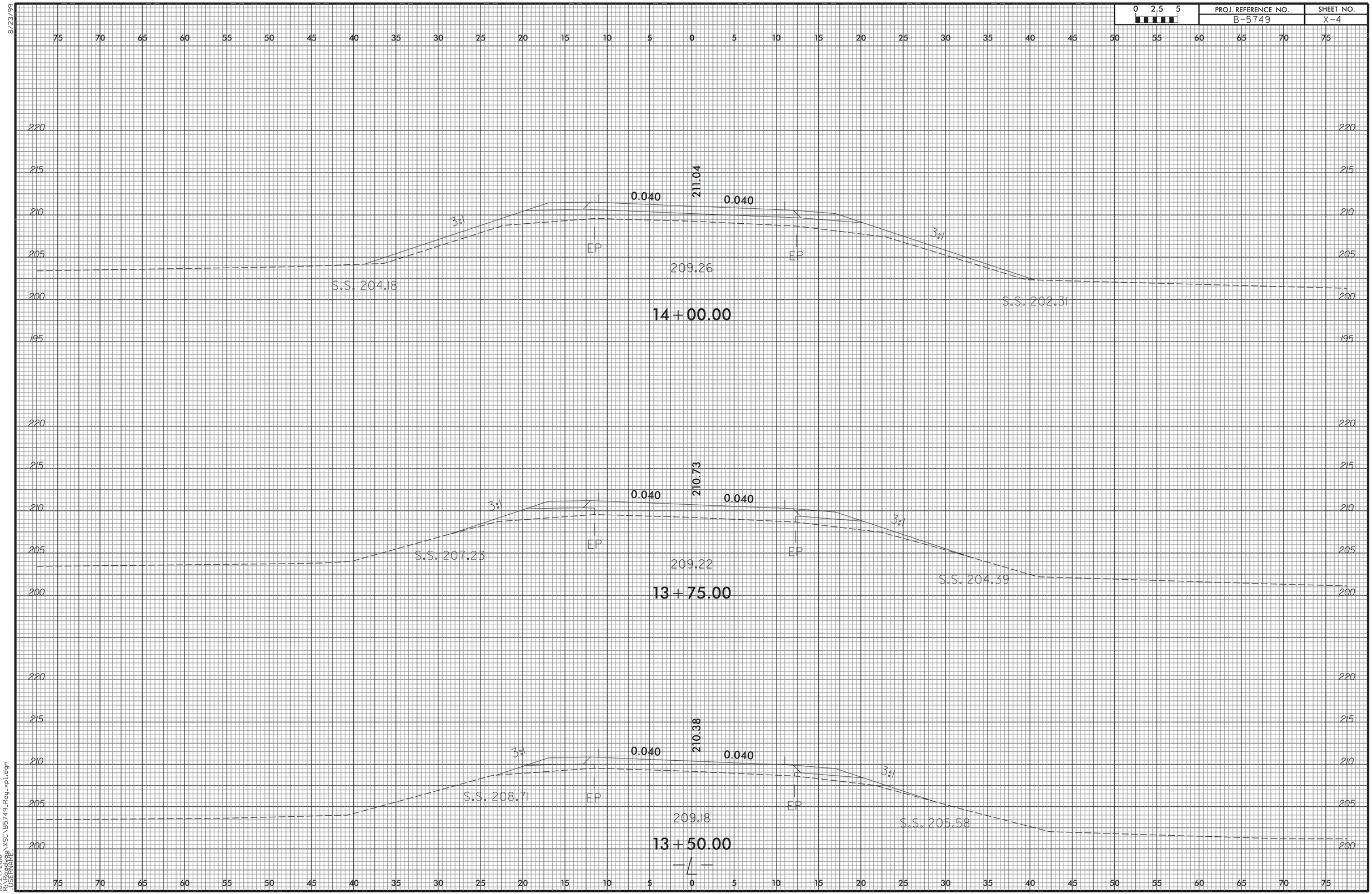

10/27/2016
R:\Roadway\XSC\B5749_Rdy_xpl.dgn
USERNAME=

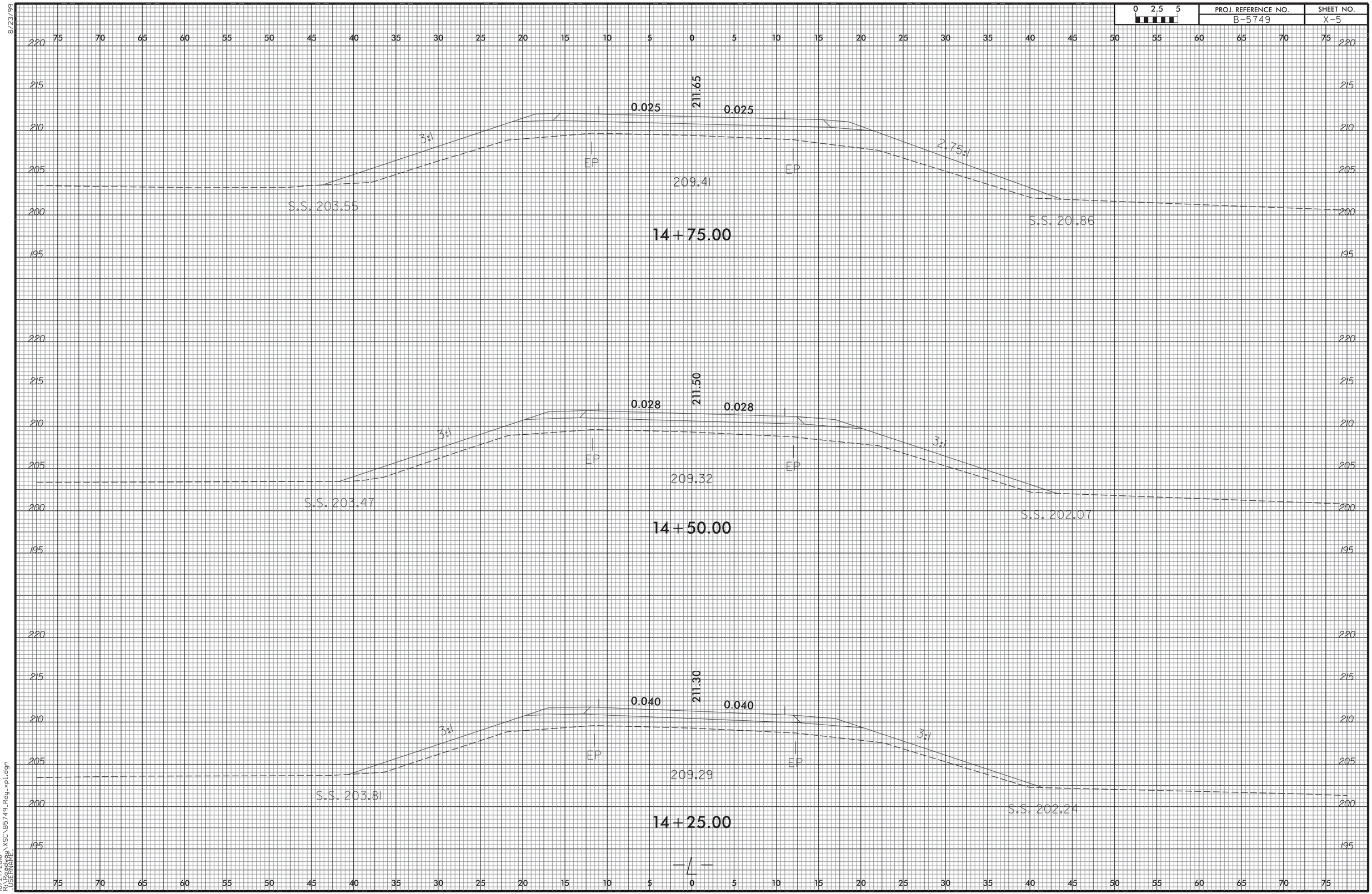

8/23/99
10/27/2016
R:\Roadway\XSC\B5749_Rdy_xpl.dgn
USERNAME=

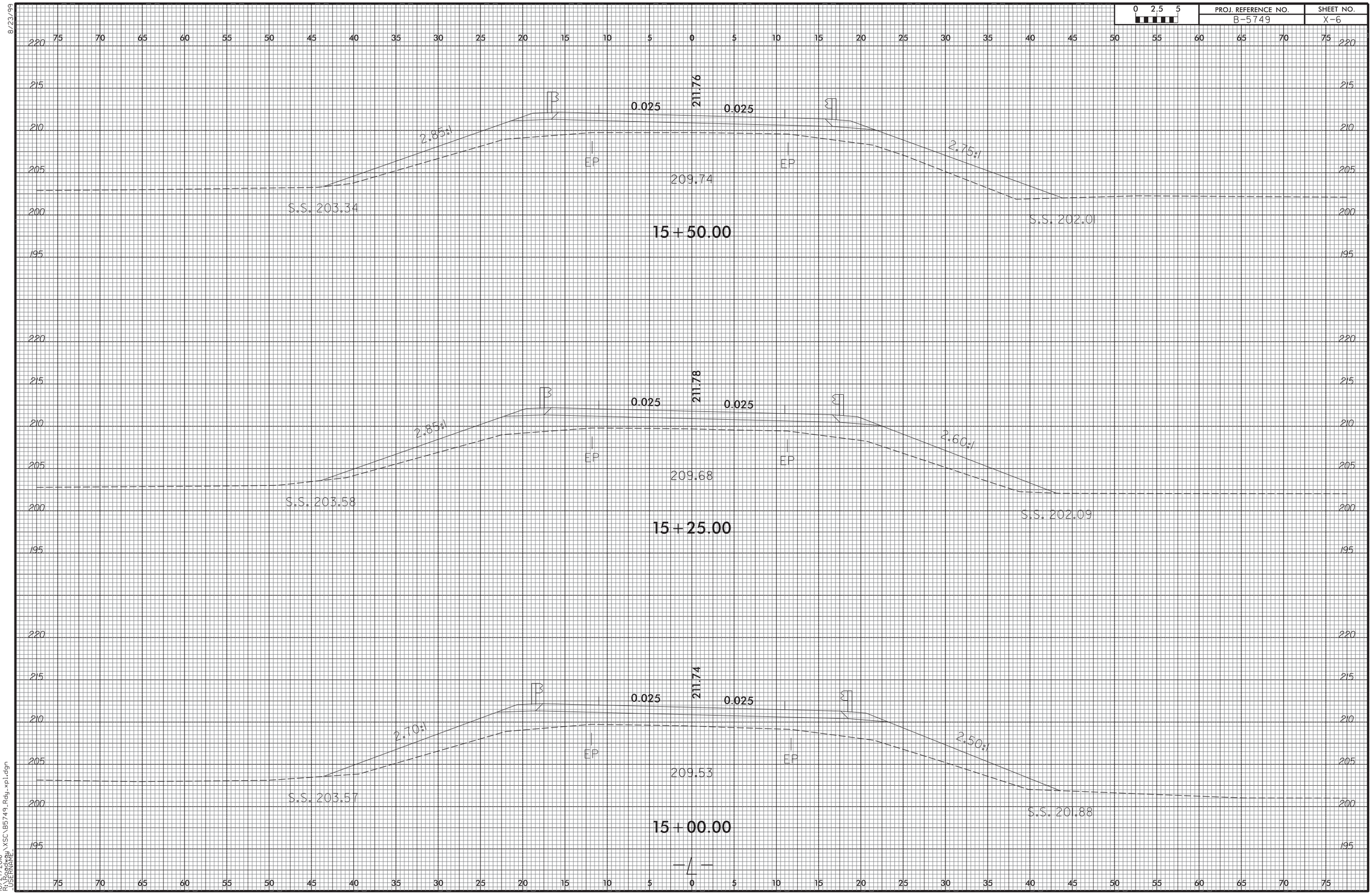

8/23/99
10/27/2016
R:\Roadway\XSC\B5749_Rdy_xpl.dgn
USERNAME=

8/23/99

0 2.5 5	PROJ. REFERENCE NO.	SHEET NO.
	B-5749	X-7

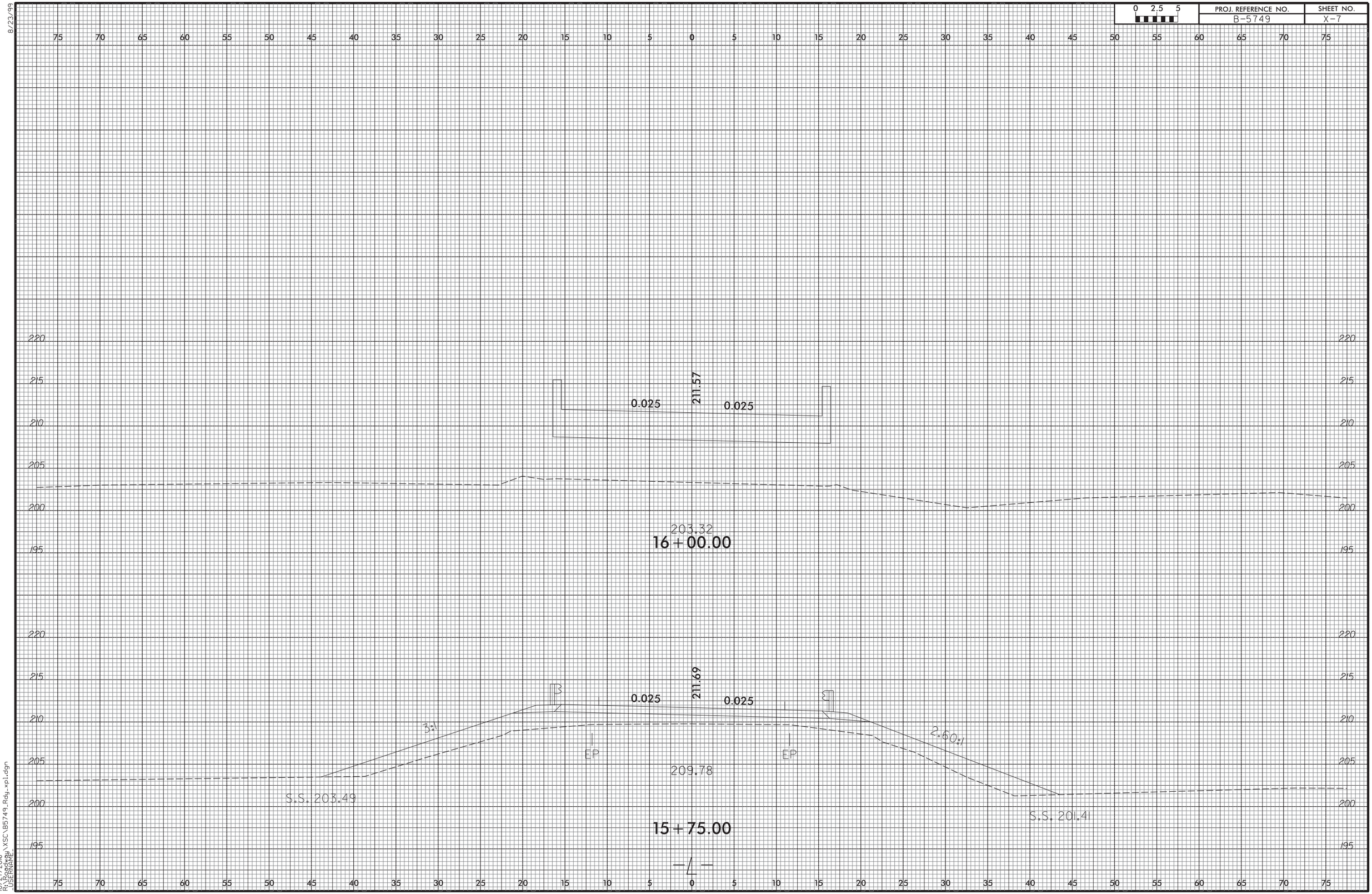

10/27/2016
R:\Roadway\XSC\B5749_Rdy_xpl.dgn
USERNAME=

8/23/99

0 2.5 5	PROJ. REFERENCE NO.	SHEET NO.
	B-5749	X-8

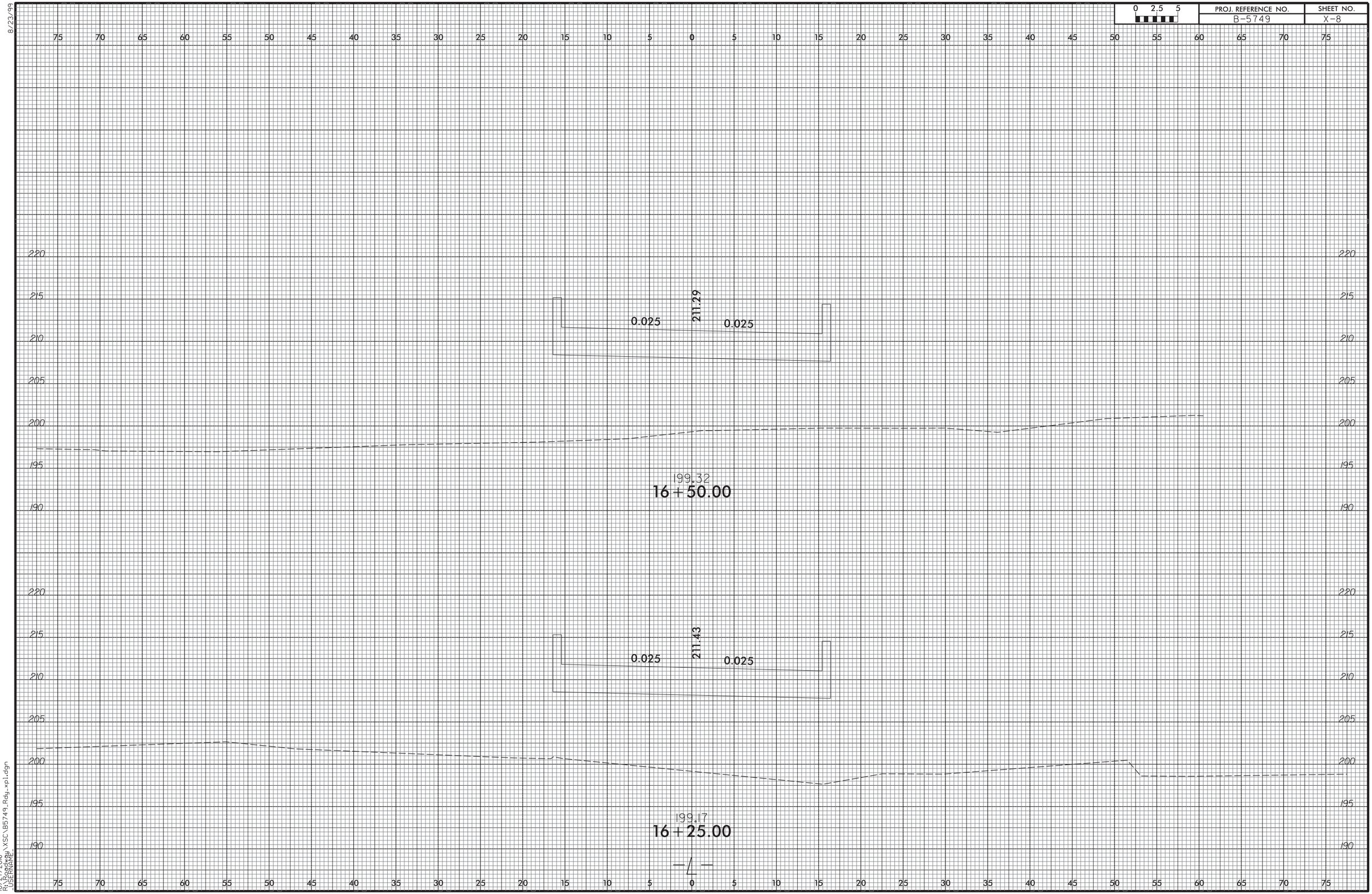

10/27/2016
R:\Roadway\XSC\B5749_Rdy_xpl.dgn
USERNAME=

0 2.5 5	PROJ. REFERENCE NO.	SHEET NO.
	B-5749	X-9

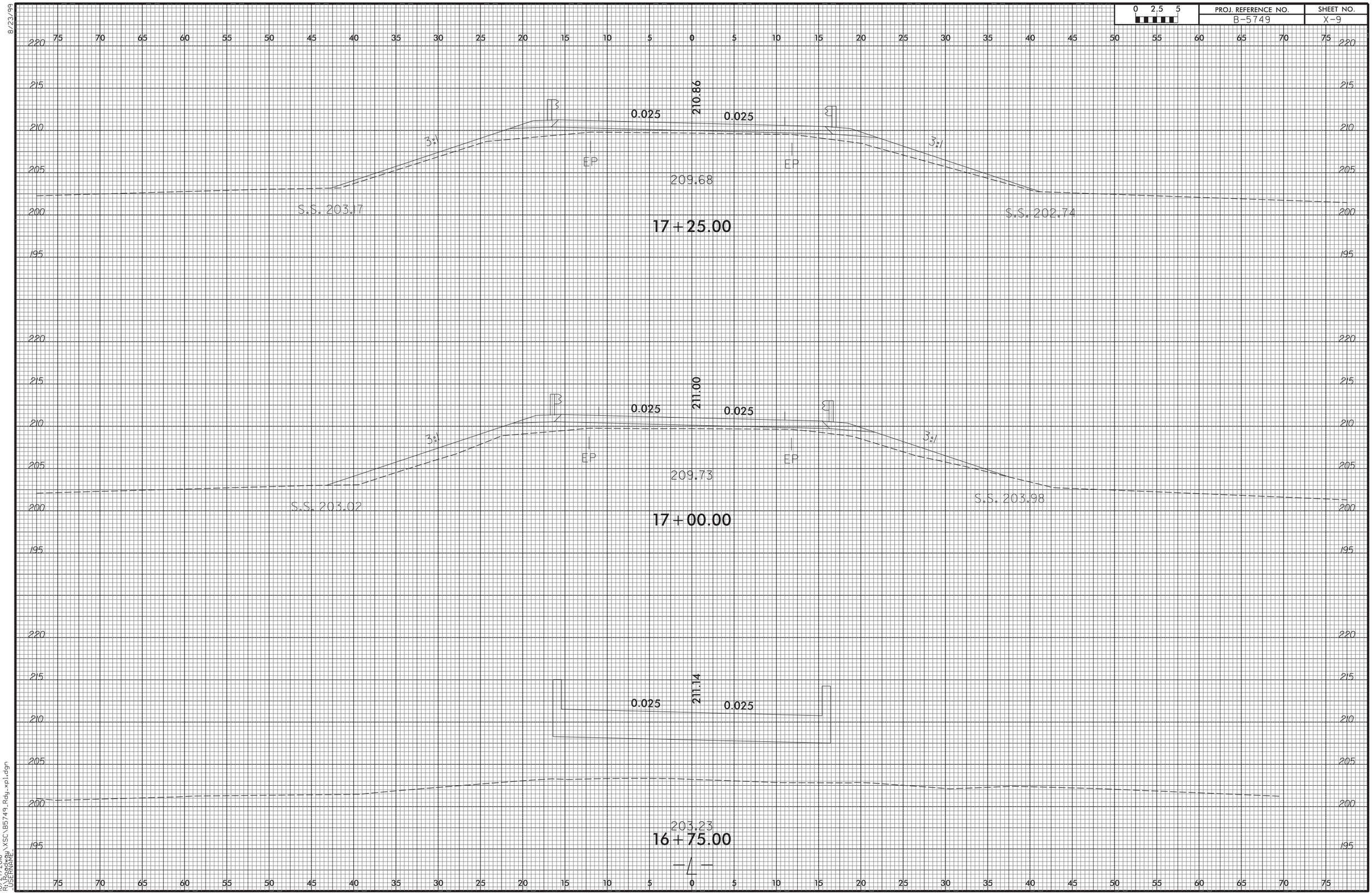

8/23/99
10/27/2016
R:\Roadway\XSC\B5749_Rdy_xpl.dgn
USERNAME=

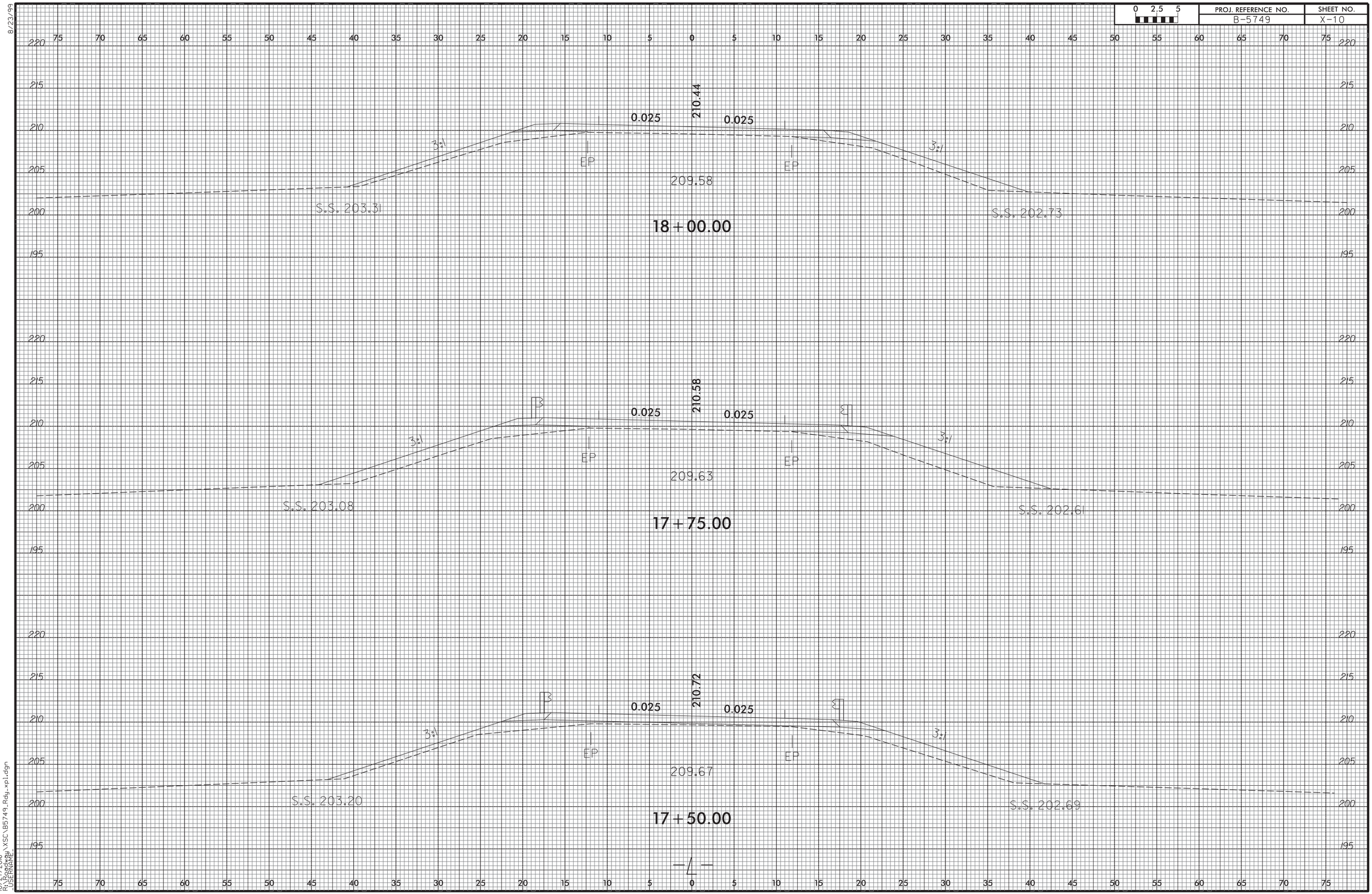
210.44
0.025
0.025
3:1
3:1
EP
EP
209.58
S.S. 203.31
S.S. 202.73
18+00.00
210.58
0.025
0.025
3:1
3:1
EP
EP
209.63
S.S. 203.08
S.S. 202.61
17+75.00
210.72
0.025
0.025
3:1
3:1
EP
EP
209.67
S.S. 203.20
S.S. 202.69
17+50.00
℄

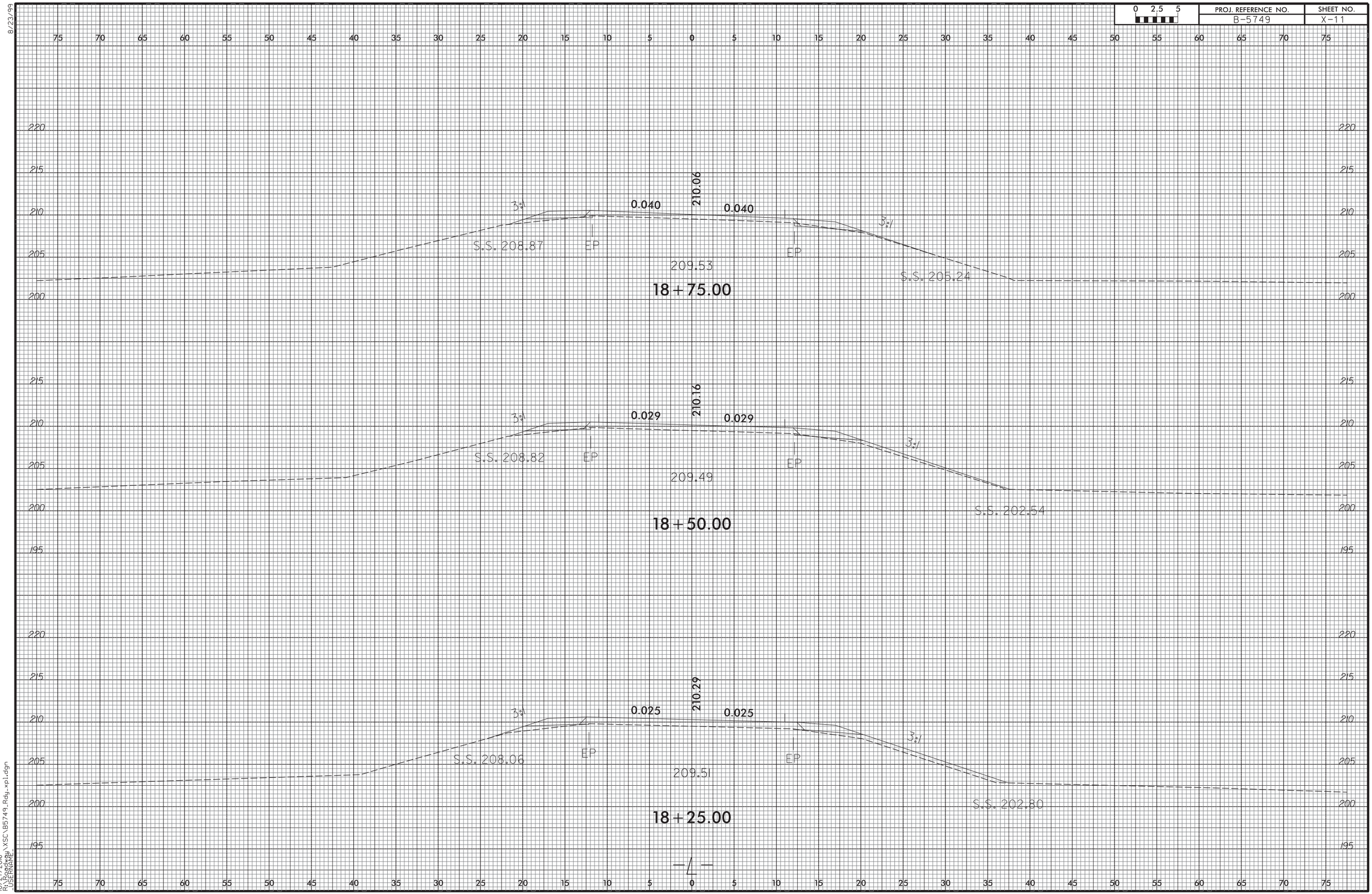

8/23/99
10/27/2016
R:\Roadway\XSC\B5749_Rdy_xpl.dgn
USERNAME=

0 2.5 5	PROJ. REFERENCE NO.	SHEET NO.
	B-5749	X-12

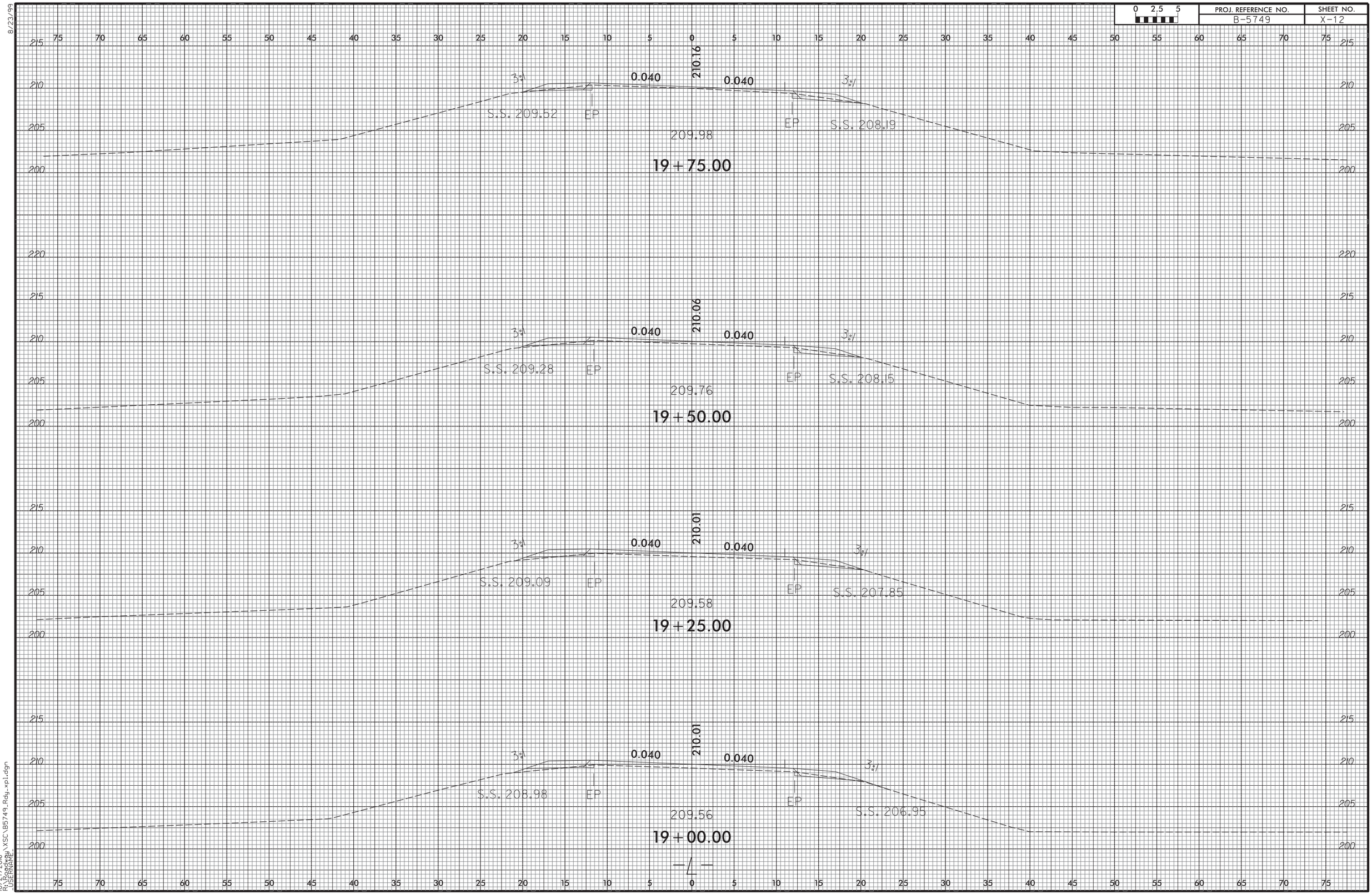

8/23/99

10/27/2016
R:\Roadway\XSC\B5749_Rdy_xpl.dgn
USERNAME =

8/23/99

0 2.5 5	PROJ. REFERENCE NO.	SHEET NO.
	B-5749	X-13

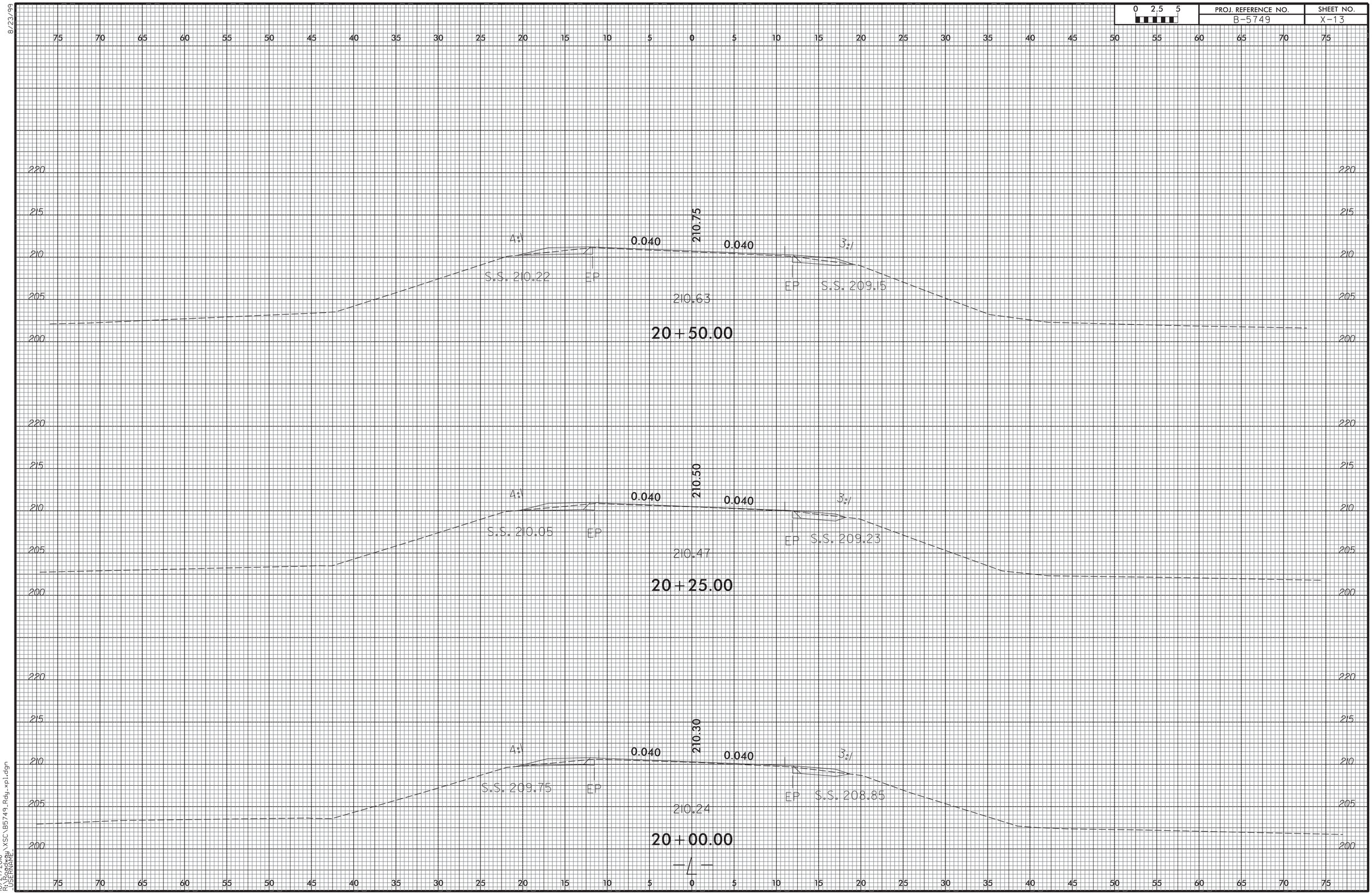

10/27/2016
R:\Roadway\XSC\B5749_Rdy_xpl.dgn
USERNAME=

8/23/99

0 2.5 5	PROJ. REFERENCE NO.	SHEET NO.
	B-5749	X-14

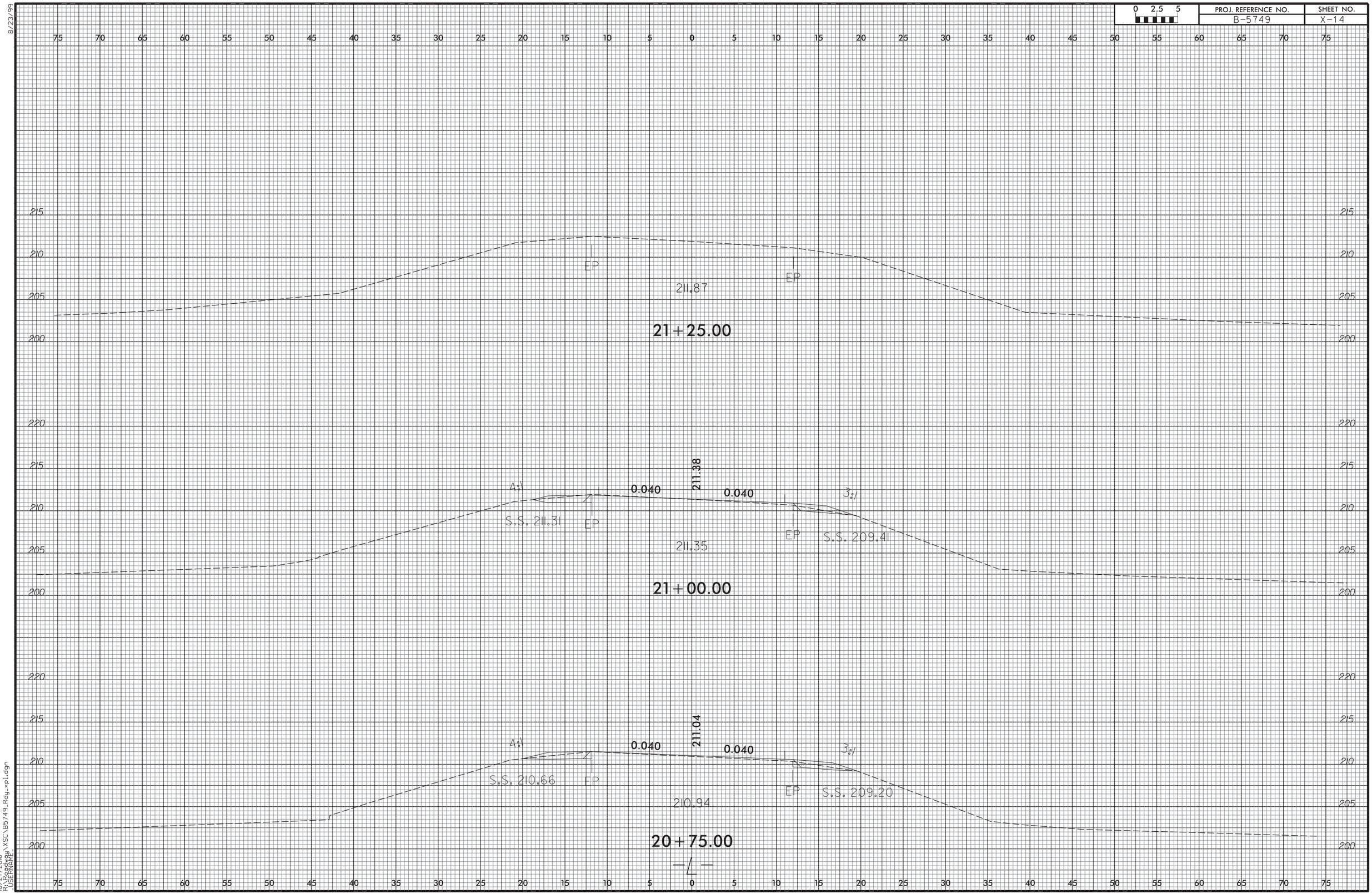

10/27/2016
R:\Roadway\XSC\B5749_Rdy_xpl.dgn
USERNAME=

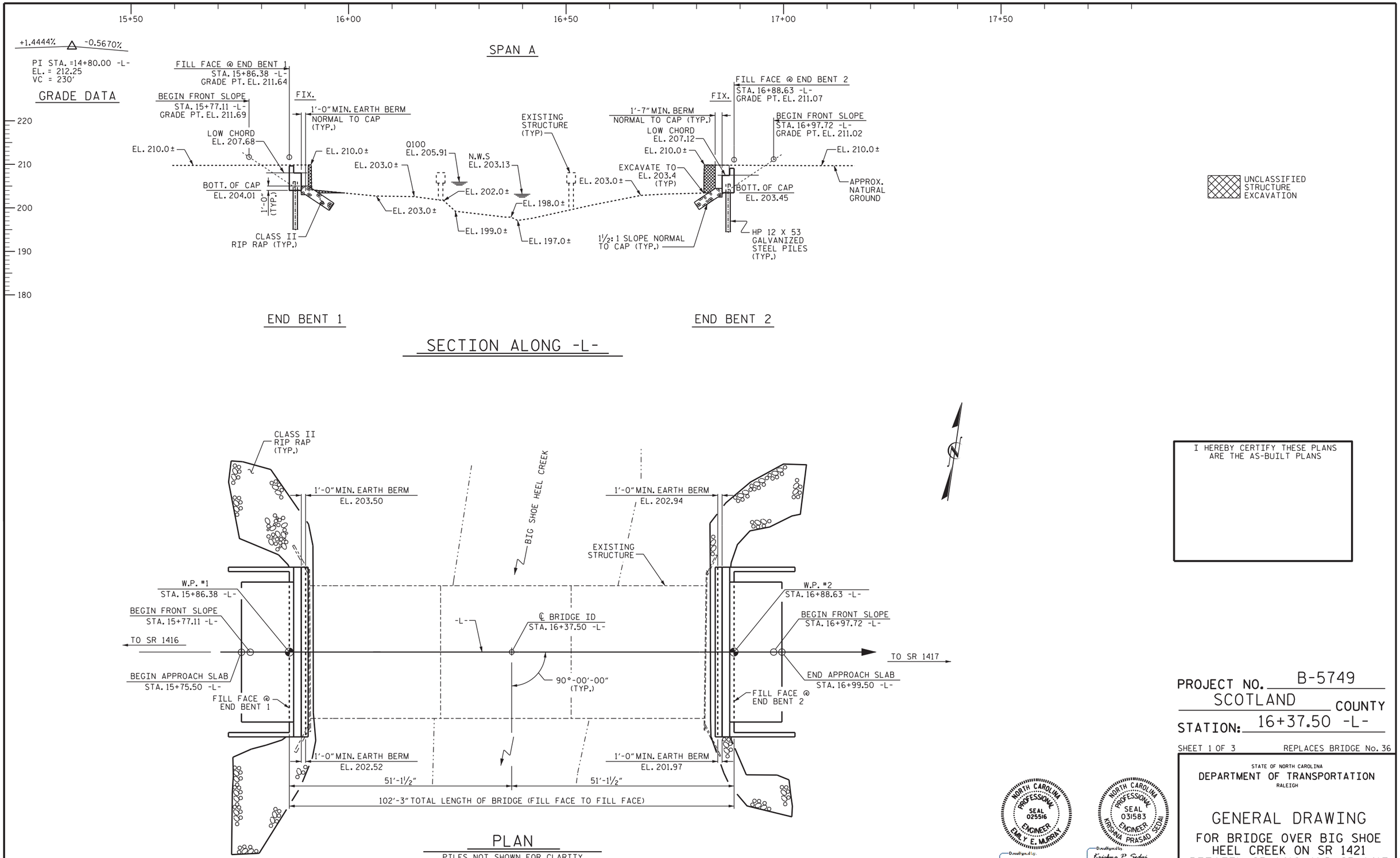

I HEREBY CERTIFY THESE PLANS ARE THE AS-BUILT PLANS

PROJECT NO. B-5749
SCOTLAND COUNTY
STATION: 16+37.50 -L-

SHEET 1 OF 3 REPLACES BRIDGE No. 36

STATE OF NORTH CAROLINA
DEPARTMENT OF TRANSPORTATION
RALEIGH

GENERAL DRAWING

FOR BRIDGE OVER BIG SHOE HEEL CREEK ON SR 1421 BETWEEN SR 1416 AND SR 1417

NORTH CAROLINA PROFESSIONAL SEAL 025516 ENGINEER EMILY E. MURRAY

Digitally signed by: Emily E. Murray
(CAEE.TAE:025516)
8/5/2016

NORTH CAROLINA PROFESSIONAL SEAL 031583 ENGINEER KRISHNA PRASAD SEDAI

Digitally signed by Krishna P. Sedai
EMAIL=kpsedai@ncdot.gov
8/5/2016

DOCUMENT NOT CONSIDERED FINAL UNLESS ALL SIGNATURES COMPLETED

REVISIONS						
NO.	BY:	DATE:	NO.	BY:	DATE:	
1			3			
2			4			

SHEET NO. S-1
TOTAL SHEETS 16

DRAWN BY : H. B. DESAI DATE : 4-22-16
CHECKED BY : K. P. SEDAI DATE : 4-29-16
DESIGN ENGINEER OF RECORD: K. P. SEDAI DATE : 8/3/16

05-AUG-2016 09:34
R:\Structures\Plans\B5749_SMU_GD.dgn
hbdesai

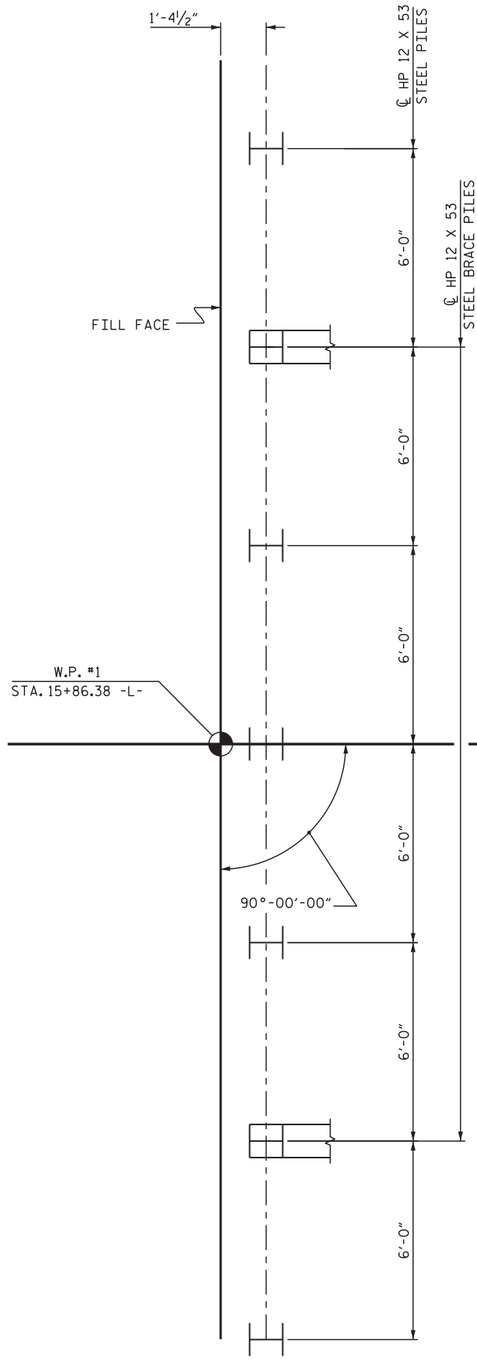

END BENT 1

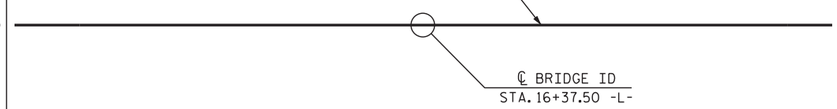

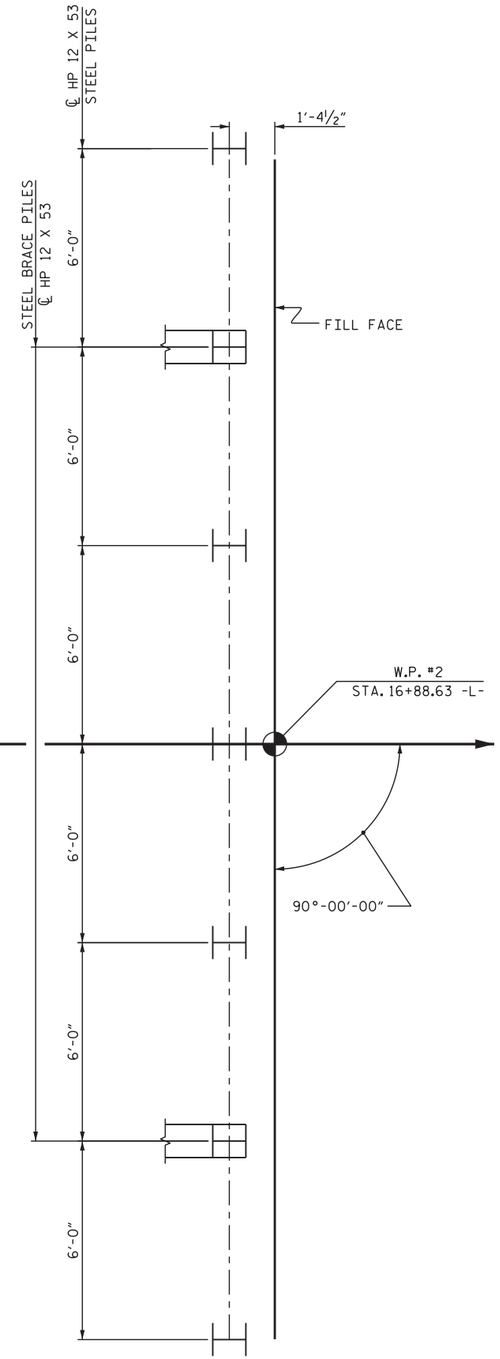

END BENT 2

NOTES

FOR PILES, SEE GEOTECHNICAL SPECIAL PROVISIONS AND SECTION 450 OF THE STANDARD SPECIFICATIONS.

PILES AT END BENT 1 AND END BENT 2 ARE DESIGNED FOR A FACTORED RESISTANCE OF 115 TONS PER PILE.

DRIVE PILES AT END BENT 1 AND END BENT 2 TO A REQUIRED DRIVING RESISTANCE OF 195 TONS PER PILE.

IT HAS BEEN ESTIMATED THAT A HAMMER WITH AN EQUIVALENT RATED ENERGY IN THE RANGE OF 20,000 TO 35,000 FT.-LBS PER BLOW WILL BE REQUIRED TO DRIVE PILES AT END BENT 1 AND END BENT 2. THIS ESTIMATED ENERGY RANGE DOES NOT RELEASE THE CONTRACTOR FROM PROVIDING DRIVING EQUIPMENT IN ACCORDANCE WITH SUBARTICLE 450-3(D)(2) OF THE STANDARD SPECIFICATIONS.

TESTING THE FIRST PRODUCTION PILE WITH THE PDA DURING DRIVING, RESTRIKING OR REDRIVING MAY BE REQUIRED AT END BENT 1 AND END BENT 2. FOR PDA TESTING, SEE SECTION 450 OF THE STANDARD SPECIFICATIONS.

FOUNDATION LAYOUT

DIMENSIONS LOCATING PILES ARE SHOWN TO PILE CENTERLINE.
BATTERED PILES ARE SLOPED 3:12.

PROJECT NO. B-5749
SCOTLAND COUNTY
STATION: 16+37.50-L-

SHEET 2 OF 3

STATE OF NORTH CAROLINA
DEPARTMENT OF TRANSPORTATION
RALEIGH

GENERAL DRAWING
FOR BRIDGE OVER BIG SHOE HEEL CREEK ON SR 1421 BETWEEN SR 1416 AND SR 1417

NORTH CAROLINA PROFESSIONAL SEAL 031583 ENGINEER KRISHNA PRASAD SEDAI

Digitally signed by Krishna P. Sedai
EXPT:<-1087+87
8/5/2016

DOCUMENT NOT CONSIDERED FINAL UNLESS ALL SIGNATURES COMPLETED

REVISIONS						SHEET NO.
NO.	BY:	DATE:	NO.	BY:	DATE:	S-2
1			3			TOTAL SHEETS
2			4			16

DRAWN BY :	D.A. DAVENPORT	DATE :	5/13/16
CHECKED BY :	K.P. SEDAI	DATE :	7/7/16
DESIGN ENGINEER OF RECORD:	K. P. SEDAI	DATE :	8/3/16

05-AUG-2016 09:34
R:\Structures\Plans\B5749_SMU_GD.dgn
hbdesai

BM #1: NAIL IN 12"Ø PINE TREE, 153.69' RIGHT OF STA. 16+87.97 -BL-, EL. 153.69'

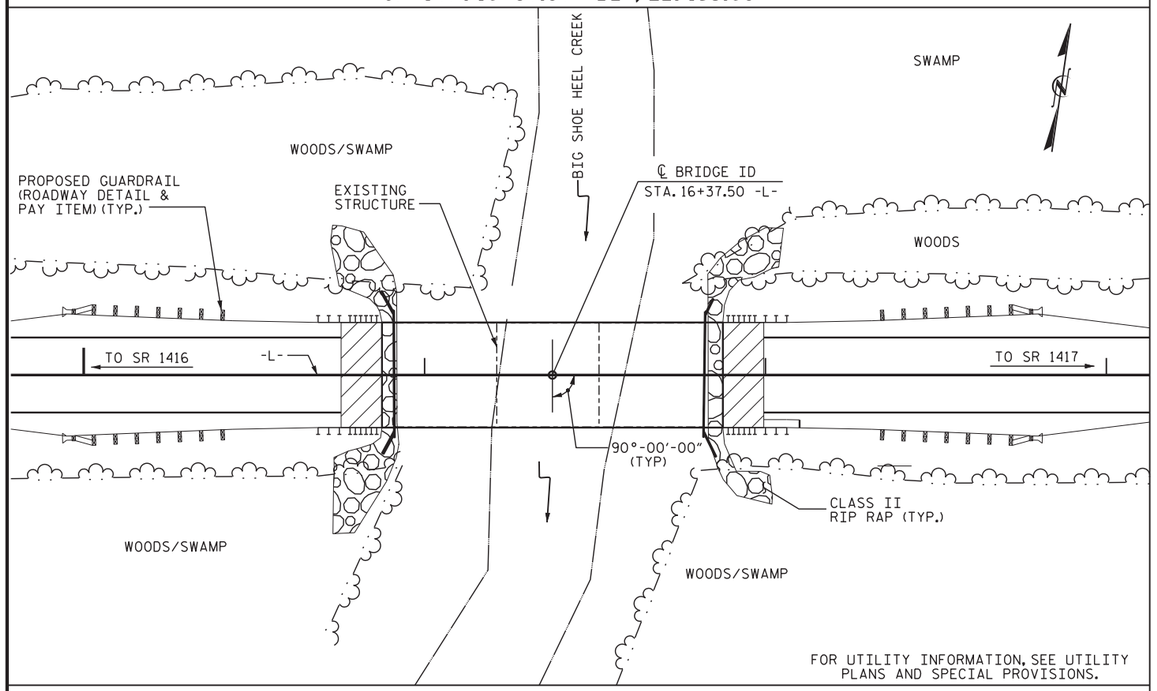

LOCATION SKETCH

HYDRAULIC DATA

DESIGN DISCHARGE	= 1,200 CFS
FREQUENCY OF DESIGN DISCHARGE	= 25 YR.
DESIGN HIGH WATER ELEVATION	= 205.10
DRAINAGE AREA	= 18 SQ.MI.
BASE DISCHARGE (Q100)	= 1,700 CFS
BASE HIGH WATER ELEVATION	= 205.91

OVERTOPPING DATA

OVERTOPPING DISCHARGE	= 4,195 CFS
FREQUENCY OF OVERTOPPING	= 500+ YR.
OVERTOPPING ELEVATION	= 209.51

NOTES

ASSUMED LIVE LOAD = HL 93 OR ALTERNATE LOADING.

THIS BRIDGE HAS BEEN DESIGNED IN ACCORDANCE WITH THE AASHTO LRFD BRIDGE DESIGN SPECIFICATIONS.

THIS BRIDGE IS LOCATED IN SEISMIC ZONE 2.

FOR OTHER DESIGN DATA AND GENERAL NOTES, SEE SHEET SN.

FOR SUBMITTAL OF WORKING DRAWINGS, SEE SPECIAL PROVISIONS.

FOR FALSEWORK & FORMWORK, SEE SPECIAL PROVISIONS.

FOR CRANE SAFETY, SEE SPECIAL PROVISIONS.

FOR GROUT FOR STRUCTURES, SEE SPECIAL PROVISIONS.

THE MATERIAL SHOWN IN THE CROSS-HATCHED AREA ON SHEET S-1 SHALL BE EXCAVATED FOR A DISTANCE OF 20 FT. EACH SIDE OF CENTERLINE ROADWAY AS DIRECTED BY THE ENGINEER. THIS WORK WILL BE PAID FOR AT THE CONTRACT LUMP SUM PRICE FOR UNCLASSIFIED STRUCTURE EXCAVATION. SEE SECTION 412 OF THE STANDARD SPECIFICATIONS.

THE EXISTING STRUCTURE CONSISTING OF 1 SPAN @ 30'-8", 1 SPAN @ 30'-0" AND 1 SPAN @ 30'-10" WITH A CLEAR ROADWAY WIDTH OF 29'-0" AND A 4" ASPHALT WEARING SURFACE ON PRECAST PRESTRESSED CONCRETE CHANNELS, ON PRECAST PRESTRESTED CONCRETE CAPS AND TIMBER PILES AND TIMBER BULKHEADS, LOCATED AT THE PROPOSED STRUCTURE, SHALL BE REMOVED. THE EXISTING BRIDGE IS PRESENTLY POSTED BELOW THE LEGAL LOAD LIMIT. FOR REMOVAL OF EXISTING STRUCTURE, SEE SPECIAL PROVISIONS.

THE SUBSTRUCTURE OF THE EXISTING BRIDGE INDICATED ON THE PLANS IS FROM THE BEST INFORMATION AVAILABLE. SINCE THIS INFORMATION IS SHOWN FOR THE CONVENIENCE OF THE CONTRACTOR, THE CONTRACTOR SHALL HAVE NO CLAIM WHATSOEVER AGAINST THE DEPARTMENT OF TRANSPORTATION FOR ANY DELAYS OR ADDITIONAL COST INCURRED BASED ON DIFFERENCES BETWEEN THE EXISTING BRIDGE SUBSTRUCTURE SHOWN ON THE PLANS AND THE ACTUAL CONDITIONS AT THE PROJECT SITE.

REMOVAL OF THE EXISTING BRIDGE SHALL BE PERFORMED SO AS NOT TO ALLOW DEBRIS TO FALL INTO THE WATER. THE CONTRACTOR SHALL REMOVE THE BRIDGE AND SUBMIT PLANS FOR DEMOLITION IN ACCORDANCE WITH ARTICLE 402-2 OF THE STANDARD SPECIFICATIONS.

THIS STRUCTURE HAS BEEN DESIGNED IN ACCORDANCE WITH HEC 18, "EVALUATING SCOUR AT BRIDGES".

FOR EROSION CONTROL MEASURES, SEE EROSION CONTROL PLANS.

ASPHALT WEARING SURFACE IS INCLUDED IN ROADWAY QUANTITY ON ROADWAY PLANS.

FOR ASBESTOS ASSESSMENT FOR BRIDGE DEMOLITION AND RENOVATION ACTIVITIES, SEE SPECIAL PROVISIONS.

AT THE CONTRACTOR'S OPTION, PRESTRESSED CONCRETE END BENT CAPS MAY BE SUBSTITUTED IN PLACE OF THE CAST-IN-PLACE CAPS. THE CONTRACTOR SHALL COORDINATE WITH THE RESIDENT ENGINEER TO RECEIVE REVISED PLANS AND DETAILS FROM THE STRUCTURE MANAGEMENT UNIT. THE REDESIGN AND ANY ADDITIONAL MATERIALS NEEDED WILL BE AT NO ADDITIONAL COST TO THE CONTRACTOR.

TOTAL BILL OF MATERIAL

	REMOVAL OF EXISTING STRUCTURE	PDA TESTING	UNCLASSIFIED STRUCTURE EXCAVATION	CLASS A CONCRETE	BRIDGE APPROACH SLABS	REINFORCING STEEL	HP 12X53 STEEL PILES		PILE REDRIVES	VERTICAL CONCRETE BARRIER RAIL	RIP RAP CLASS II (2'-0" THICK)	GEOTEXTILE FOR DRAINAGE	ELASTOMERIC BEARINGS	3'-0" X 3'-3" PRESTRESSED CONCRETE BOX BEAM		ASBESTOS ASSESSMENT
	LUMP SUM	EACH	LUMP SUM	CU. YDS.	LUMP SUM	LBS.	NO.	LIN.FT.	EACH	LIN.FT.	TONS	SQ. YDS.	LUMP SUM	NO.	LIN.FT.	LUMP SUM
SUPERSTRUCTURE										200.00				11	1,100.00	
END BENT NO. 1				29.0		4,610	7	490	7		110	120				
END BENT NO. 2				29.0		4,610	7	560	7		100	110				
TOTAL	LUMP SUM	2	LUMP SUM	58.0	LUMP SUM	9,220	14	1,050	14	200.00	210	230	LUMP SUM	11	1,100.00	LUMP SUM

PROJECT NO. B-5749
SCOTLAND COUNTY
STATION: 16+37.50 -L-

SHEET 3 OF 3

NORTH CAROLINA PROFESSIONAL SEAL 031583 ENGINEER KRISHNA PRASAD SEDAI

DocuSigned by: Krishna P. Sedai
8/5/2016

STATE OF NORTH CAROLINA
DEPARTMENT OF TRANSPORTATION
RALEIGH

GENERAL DRAWING
FOR BRIDGE OVER BIG SHOE HEEL CREEK ON SR 1421 BETWEEN SR 1416 AND SR 1417

DOCUMENT NOT CONSIDERED FINAL UNLESS ALL SIGNATURES COMPLETED

REVISIONS								SHEET NO.
NO.	BY:	DATE:	NO.	BY:	DATE:			S-3
1			3					TOTAL SHEETS
2			4					16

DRAWN BY : D.A. DAVENPORT DATE : 5/13/16
CHECKED BY : K.P. SEDAI DATE : 7/7/16
DESIGN ENGINEER OF RECORD: K. P. SEDAI DATE : 8/3/16

05-AUG-2016 09:34
R:\Structures\Plans\B5749_SMU_GD.dgn
hbdesai

LOAD AND RESISTANCE FACTOR RATING (LRFR) SUMMARY FOR PRESTRESSED CONCRETE GIRDERS

LEVEL		VEHICLE	WEIGHT (W) (TONS)	CONTROLLING LOAD RATING	MINIMUM RATING FACTORS (RF)	TONS = W X RF	STRENGTH I LIMIT STATE											SERVICE III LIMIT STATE						COMMENT NUMBER
							LIVELOAD FACTORS	MOMENT					SHEAR					LIVELOAD FACTORS	MOMENT					
								DISTRIBUTION FACTORS (DF)	RATING FACTOR	SPAN	GIRDER LOCATION	DISTANCE FROM LEFT END OF SPAN (ft)	DISTRIBUTION FACTORS (DF)	RATING FACTOR	SPAN	GIRDER LOCATION	DISTANCE FROM LEFT END OF SPAN (ft)		DISTRIBUTION FACTORS (DF)	RATING FACTOR	SPAN	GIRDER LOCATION	DISTANCE FROM LEFT END OF SPAN (ft)	
DESIGN LOAD RATING		HL-93(Inv)	N/A	1	1.035	--	1.75	0.272	1.26	A	EL	49.25	0.489	1.34	A	EL	4.925	0.80	0.272	**1.04**	A	EL	**49.25**	
		HL-93(Opr)	N/A	--	1.633	--	1.35	0.272	1.63	A	EL	49.25	0.489	1.73	A	EL	4.925	N/A	--	--	--	--	--	
		HS-20(Inv)	36.000	2	1.44	51.84	1.75	0.272	1.75	A	EL	49.25	0.489	1.81	A	EL	4.925	0.80	0.272	**1.44**	A	EL	**49.25**	
		HS-20(Opr)	36.000	--	2.271	81.756	1.35	0.272	2.27	A	EL	49.25	0.489	2.35	A	EL	4.925	N/A	--	--	--	--	--	
LEGAL LOAD RATING	SV	SNSH	13.500	--	3.413	46.079	1.4	0.272	5.19	A	EL	49.25	0.489	5.59	A	EL	4.925	0.80	0.272	3.41	A	EL	49.25	
		SNGARBS2	20.000	--	2.473	49.452	1.4	0.272	3.76	A	EL	49.25	0.489	3.91	A	EL	4.925	0.80	0.272	2.47	A	EL	49.25	
		SNAGRIS2	22.000	--	2.313	50.885	1.4	0.272	3.52	A	EL	49.25	0.489	3.6	A	EL	4.925	0.80	0.272	2.31	A	EL	49.25	
		SNCOTTS3	27.250	--	1.696	46.228	1.4	0.272	2.58	A	EL	49.25	0.489	2.78	A	EL	4.925	0.80	0.272	1.70	A	EL	49.25	
		SNAGGRS4	34.925	--	1.39	48.556	1.4	0.272	2.11	A	EL	49.25	0.489	2.26	A	EL	4.925	0.80	0.272	1.39	A	EL	49.25	
		SNS5A	35.550	--	1.361	48.398	1.4	0.272	2.07	A	EL	49.25	0.489	2.27	A	EL	4.925	0.80	0.272	1.36	A	EL	49.25	
		SNS6A	39.950	--	1.238	49.456	1.4	0.272	1.88	A	EL	49.25	0.489	2.05	A	EL	4.925	0.80	0.272	1.24	A	EL	49.25	
		SNS7B	42.000	--	1.178	49.496	1.4	0.272	1.79	A	EL	49.25	0.489	2	A	EL	4.925	0.80	0.272	1.18	A	EL	49.25	
	TTST	TNAGRIT3	33.000	--	1.506	49.709	1.4	0.272	2.29	A	EL	49.25	0.489	2.46	A	EL	4.925	0.80	0.272	1.51	A	EL	49.25	
		TNT4A	33.075	--	1.51	49.942	1.4	0.272	2.3	A	EL	49.25	0.489	2.41	A	EL	4.925	0.80	0.272	1.51	A	EL	49.25	
		TNT6A	41.600	--	1.224	50.926	1.4	0.272	1.86	A	EL	49.25	0.489	2.09	A	EL	4.925	0.80	0.272	1.22	A	EL	49.25	
		TNT7A	42.000	--	1.225	51.442	1.4	0.272	1.86	A	EL	49.25	0.489	2.05	A	EL	4.925	0.80	0.272	1.22	A	EL	49.25	
		TNT7B	42.000	--	1.254	52.657	1.4	0.272	1.91	A	EL	49.25	0.489	1.96	A	EL	4.925	0.80	0.272	1.25	A	EL	49.25	
		TNAGRIT4	43.000	--	1.203	51.711	1.4	0.272	1.83	A	EL	49.25	0.489	1.91	A	EL	4.925	0.80	0.272	1.20	A	EL	49.25	
		TNAGT5A	45.000	--	1.139	51.236	1.4	0.272	1.73	A	EL	49.25	0.489	1.87	A	EL	4.925	0.80	0.272	1.14	A	EL	49.25	
		TNAGT5B	45.000	3	1.129	50.805	1.4	0.272	1.72	A	EL	49.25	0.489	1.82	A	EL	4.925	0.80	0.272	**1.13**	A	EL	**49.25**	

LOAD FACTORS:

DESIGN LOAD RATING FACTORS	LIMIT STATE	γ_{DC}	γ_{DW}
	STRENGTH I	1.25	1.50
	SERVICE III	1.00	1.00

NOTES:

MINIMUM RATING FACTORS ARE BASED ON THE STRENGTH I AND SERVICE III LIMIT STATES.

ALLOWABLE STRESSES FOR SERVICE III LIMIT STATE ARE AS REQUIRED FOR DESIGN.

COMMENTS:

1.
2.
3.
4.

(#) CONTROLLING LOAD RATING

(1) DESIGN LOAD RATING (HL-93)

(2) DESIGN LOAD RATING (HS-20)

(3) LEGAL LOAD RATING **

** SEE CHART FOR VEHICLE TYPE

GIRDER LOCATION

I - INTERIOR GIRDER
EL - EXTERIOR LEFT GIRDER
ER - EXTERIOR RIGHT GIRDER

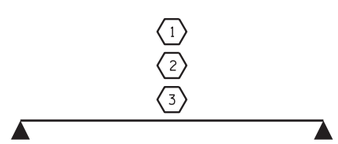

LRFR SUMMARY

PROJECT NO. B-5749
SCOTLAND COUNTY
STATION: 16+37.50-L-

NORTH CAROLINA PROFESSIONAL SEAL 031583 ENGINEER KRISHNA PRASAD SEDAI

DocuSigned by: Krishna P. Sedai
8/5/2016

STATE OF NORTH CAROLINA
DEPARTMENT OF TRANSPORTATION
RALEIGH

STANDARD
LRFR SUMMARY FOR 100' BOX BEAM UNIT 90° SKEW
(NON-INTERSTATE TRAFFIC)

REVISIONS						SHEET NO.
NO.	BY:	DATE:	NO.	BY:	DATE:	S-4
1			3			TOTAL SHEETS
2			4			16

DOCUMENT NOT CONSIDERED FINAL UNLESS ALL SIGNATURES COMPLETED

ASSEMBLED BY : D.A. DAVENPORT DATE : 5/5/16
CHECKED BY : K.P. SEDAI DATE : 5/9/16
DRAWN BY : TMG 11/11
CHECKED BY : AAC 11/11

05-AUG-2016 09:34
R:\Structures\Plans\B5749_SMU_LR.dgn
hbdesai

STD. NO. 39LRFR1_90S_100L

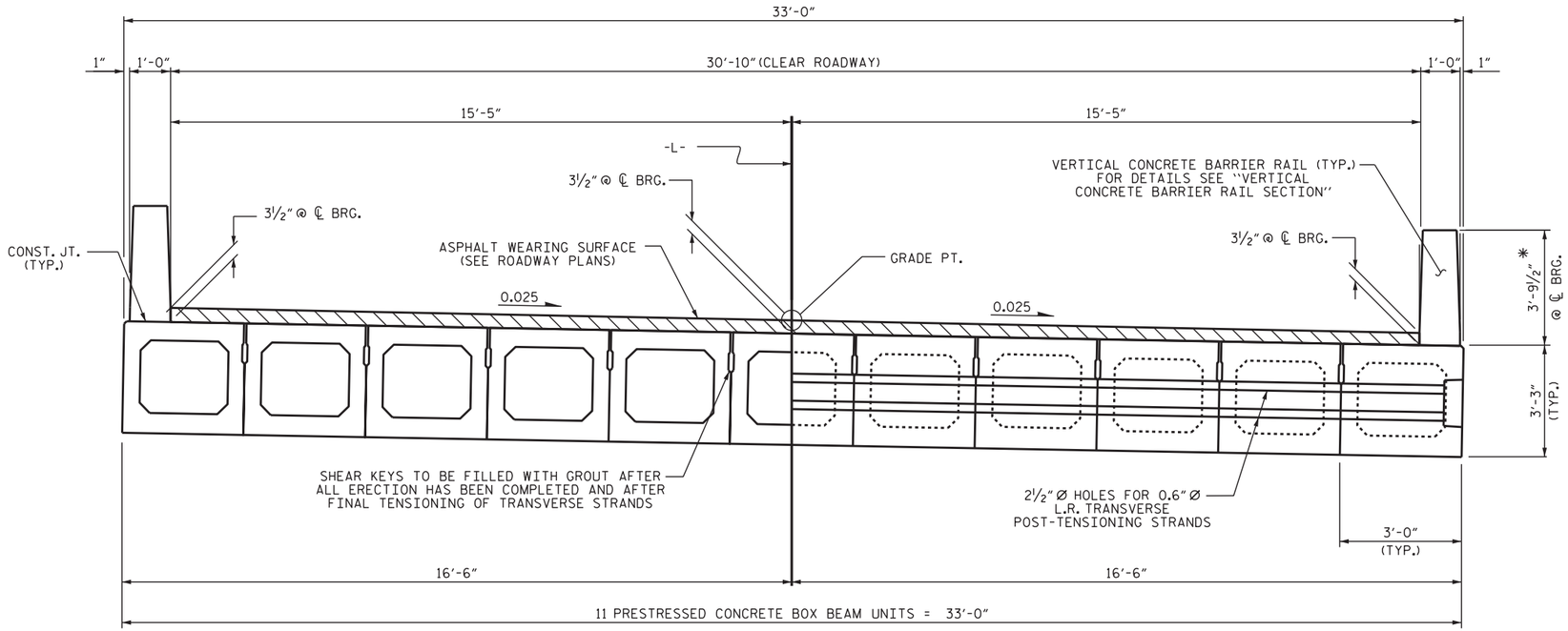

HALF SECTION
THROUGH VOIDS

HALF SECTION
AT INTERMEDIATE DIAPHRAGMS

TYPICAL SECTION

* THE MAXIMUM BARRIER RAIL HEIGHT AND ASPHALT THICKNESS IS SHOWN. THE HEIGHT OF THE BARRIER RAIL AND ASPHALT THICKNESS VARIES WHILE THE TOP OF THE BARRIER RAIL FOLLOWS THE PROFILE OF THE GUTTERLINE. FOR RAIL HEIGHT DETAILS AND ASPHALT THICKNESS, SEE THE "VERTICAL CONCRETE BARRIER RAIL SECTION" DETAIL.

FIXED END

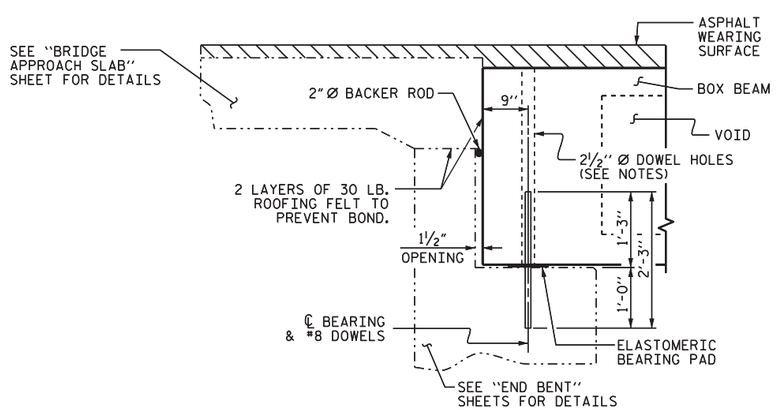

SECTION AT END BENT

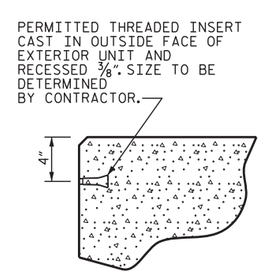

THREADED INSERT DETAIL

NOTES

ALL PRESTRESSING STRANDS SHALL BE 7-WIRE LOW RELAXATION GRADE 270 STRANDS AND SHALL CONFORM TO AASHTO M203 EXCEPT FOR SAMPLING REQUIREMENTS WHICH SHALL BE IN ACCORDANCE WITH THE STANDARD SPECIFICATIONS.

ALL REINFORCING STEEL CAST WITH THE BOX BEAM SECTIONS SHALL BE GRADE 60 AND SHALL BE INCLUDED IN THE UNIT PRICE BID FOR PRESTRESSED CONCRETE BOX BEAMS.

FLAME CUTTING OF THE TRANSVERSE POST-TENSIONING STRAND IS NOT ALLOWED.

RECESSES FOR TRANSVERSE STRANDS SHALL BE GROUTED AFTER THE TENSIONING OF THE STRANDS.

THE 2½" Ø DOWEL HOLES AT FIXED ENDS OF BOX BEAM SECTIONS SHALL BE FILLED WITH NON-SHRINK GROUT.

THE BACKER RODS SHALL CONFORM TO THE REQUIREMENTS OF TYPE M BOND BREAKER. SEE SECTION 1028 OF THE STANDARD SPECIFICATIONS.

THE TRANSFER OF LOAD FROM THE ANCHORAGES TO THE BOX BEAM UNIT SHALL BE DONE WHEN THE CONCRETE HAS REACHED A COMPRESSIVE STRENGTH OF NOT LESS THAN 5,500 PSI.

ALL REINFORCING STEEL IN VERTICAL CONCRETE BARRIER RAILS SHALL BE EPOXY COATED.

PRESTRESSING STRANDS SHALL BE CUT FLUSH WITH THE BOX BEAM UNIT ENDS.

APPLY EPOXY PROTECTIVE COATING TO BOX BEAM UNIT ENDS.

VERTICAL GROOVED CONTRACTION JOINTS, ½" IN DEPTH, SHALL BE TOOLED IN ALL EXPOSED FACES OF THE BARRIER RAIL AND IN ACCORDANCE WITH ARTICLE 825-10(B) OF THE STANDARD SPECIFICATIONS. A VERTICAL CONTRACTION JOINT SHALL BE LOCATED AT EACH THIRD POINT BETWEEN BARRIER RAIL EXPANSION JOINTS. ONLY ONE CONTRACTION JOINT IS REQUIRED AT MIDPOINT OF BARRIER RAIL SEGMENTS LESS THAN 20 FEET IN LENGTH AND NO CONTRACTION JOINTS ARE REQUIRED FOR THOSE SEGMENTS LESS THAN 10 FEET IN LENGTH.

THE LOCATION OF THE VOID DRAINS MAY BE SHIFTED SLIGHTLY WHERE NECESSARY TO CLEAR PRESTRESSING STRANDS OR TRANSVERSE REINFORCING STEEL.

FOR GROUT FOR STRUCTURES, SEE SPECIAL PROVISIONS.

THE PERMITTED THREADED INSERTS ARE DETAILED AS AN OPTION FOR THE CONTRACTOR TO ATTACH FALSEWORK AND FORMWORK DURING CONSTRUCTION.

THE PERMITTED THREADED INSERTS IN THE EXTERIOR UNITS SHALL BE SIZED BY THE CONTRACTOR, SPACED AT 4'-0" CENTERS AND GALVANIZED IN ACCORDANCE WITH SECTION 1076 OF THE STANDARD SPECIFICATIONS. STAINLESS STEEL THREADED INSERTS MAY BE USED AS AN ALTERNATE.

THE PERMITTED THREADED INSERTS SHALL BE GROUTED BY THE CONTRACTOR IMMEDIATELY FOLLOWING REMOVAL OF THE FALSEWORK.

THE COST OF THE PERMITTED THREADED INSERTS SHALL BE INCLUDED IN THE PRICE BID FOR THE PRECAST UNITS.

PROJECT NO. B-5749
SCOTLAND COUNTY
STATION: 16+37.50-L-

SHEET 1 OF 5

NORTH CAROLINA PROFESSIONAL SEAL 031583 ENGINEER KRISHNA PRASAD SEDAI

DocuSigned by: Krishna P. Sedai
E2A7F7C4C5B5402...
8/5/2016

STATE OF NORTH CAROLINA
DEPARTMENT OF TRANSPORTATION
RALEIGH

STANDARD

3'-0" X 3'-3"
PRESTRESSED CONCRETE
BOX BEAM UNIT

REVISIONS						SHEET NO.
NO.	BY:	DATE:	NO.	BY:	DATE:	S-5
1			3			TOTAL SHEETS
2			4			16

DOCUMENT NOT CONSIDERED FINAL UNLESS ALL SIGNATURES COMPLETED

ASSEMBLED BY : D.A. DAVENPORT	DATE : 5/5/16
CHECKED BY : K.P. SEDAI	DATE : 5/9/16
DRAWN BY : DGE 8/11	REV. 10/15 MAA/TMG
CHECKED BY : TMG 11/11	

05-AUG-2016 09:34
R:\Structures\Plans\B5749_SMU_TS.dgn
hbdesai

STD. NO. 39PCBB1_33

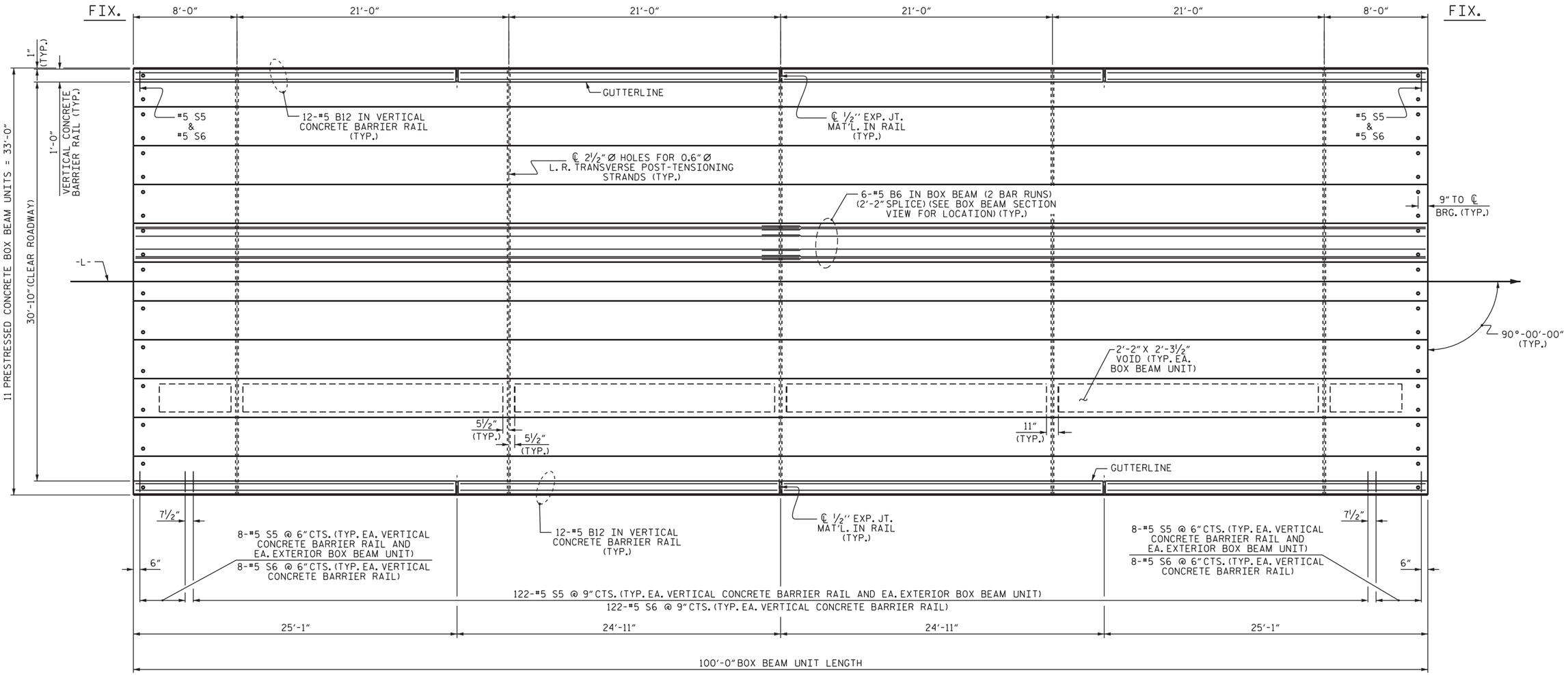

PLAN OF UNIT

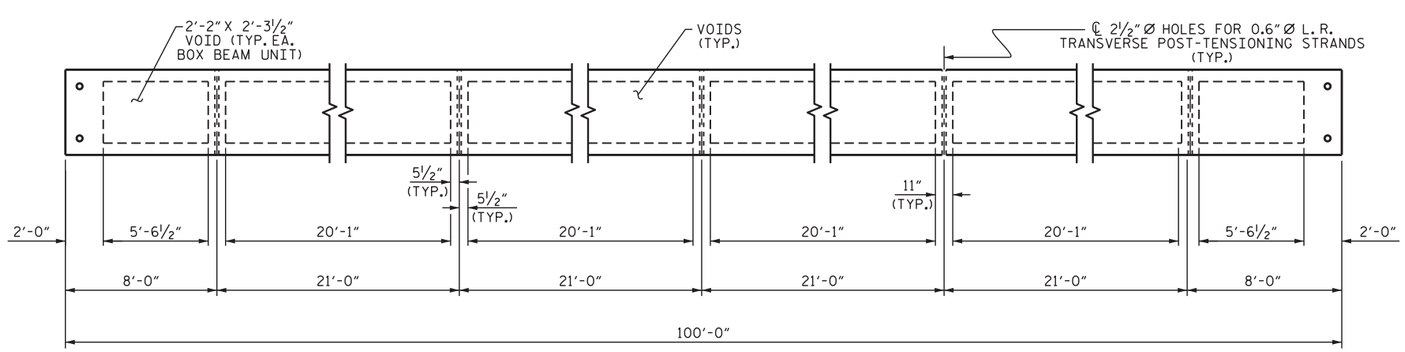

DIAPHRAGM AND VOID LAYOUT

PROJECT NO. B-5749

SCOTLAND COUNTY

STATION: 16+37.50-L-

SHEET 2 OF 5

STATE OF NORTH CAROLINA
DEPARTMENT OF TRANSPORTATION
RALEIGH

PLAN OF 100' UNIT
30'-10" CLEAR ROADWAY
90° SKEW

NORTH CAROLINA PROFESSIONAL SEAL 031583 ENGINEER KRISHNA PRASAD SEDAI

Digitally signed by Krishna P. Sedai
Exp. 2016-08-04 07:00:00 Z
8/5/2016

REVISIONS						SHEET NO.
NO.	BY:	DATE:	NO.	BY:	DATE:	S-6
1			3			TOTAL SHEETS
2			4			16

DOCUMENT NOT CONSIDERED FINAL UNLESS ALL SIGNATURES COMPLETED

ASSEMBLED BY : D.A. DAVENPORT	DATE : 5/5/16		
CHECKED BY : K.P. SEDAI	DATE : 5/9/16		
DRAWN BY : DGE 8/10	REV. 8/14	MAA/TMG	
CHECKED BY : TMG 11/11			

05-AUG-2016 09:34
R:\Structures\Plans\B5749_SMU_PS.dgn
hbdesai

STD.NO.39PCBB_33_90S_100L

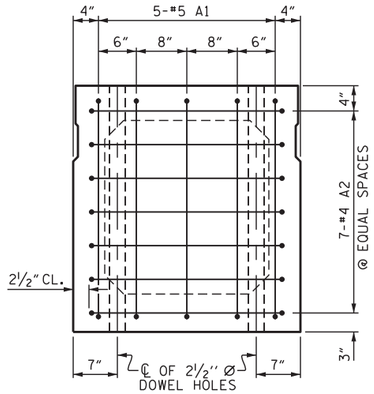

END ELEVATION

SHOWING PLACEMENT OF #5 & #4 "A" BARS AND LOCATION OF DOWEL HOLES. (INTERIOR BOX BEAM SECTION SHOWN-EXTERIOR SECTION SIMILAR EXCEPT SHEAR KEY LOCATION. STRAND LAYOUT NOT SHOWN.)

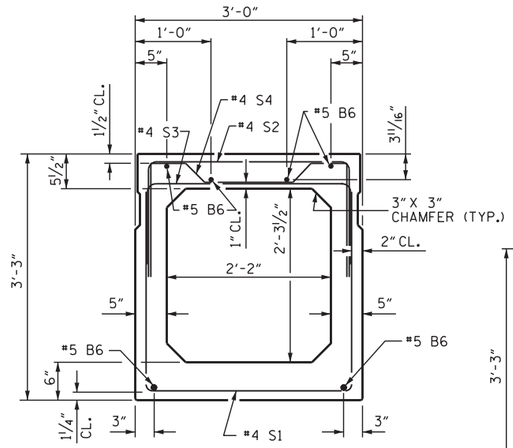

INTERIOR BOX BEAM SECTION

(STRAND LAYOUT NOT SHOWN)

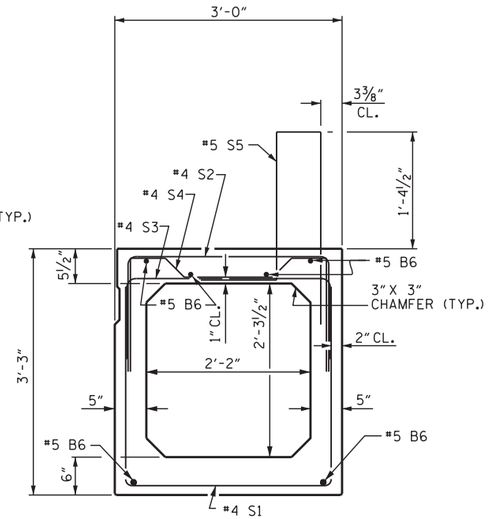

EXTERIOR BOX BEAM SECTION

(STRAND LAYOUT NOT SHOWN)

0.6" Ø LOW RELAXATION STRAND LAYOUT

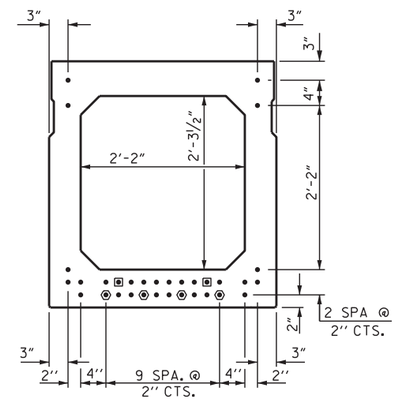

TYPICAL STRAND LOCATION

(32 STRANDS REQUIRED)

DEBONDING LEGEND

- ● FULLY BONDED STRANDS
- ◉ STRANDS DEBONDED FOR 4'-0" FROM END OF GIRDER
- ⬢ STRANDS DEBONDED FOR 12'-0" FROM END OF GIRDER

BOND SHALL BE BROKEN ON STRANDS AS SHOWN FOR THE SPECIFIED LENGTH FROM EACH END OF THE BOX BEAM. SEE STANDARD SPECIFICATIONS ARTICLE 1078-7.

BAR TYPES

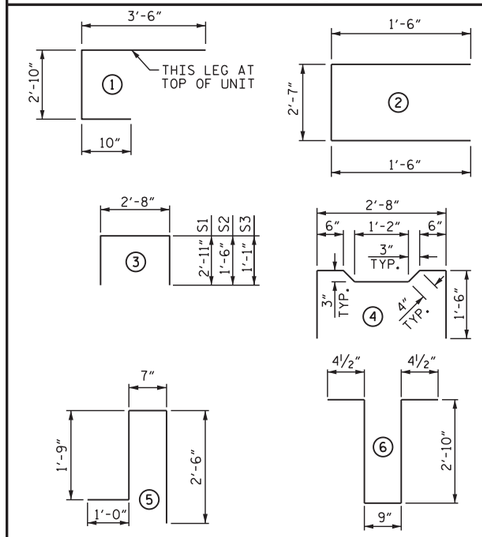

ALL BAR DIMENSIONS ARE OUT TO OUT

BILL OF MATERIAL FOR ONE BOX BEAM SECTION

				EXTERIOR UNIT		INTERIOR UNIT	
BAR	NUMBER	SIZE	TYPE	LENGTH	WEIGHT	LENGTH	WEIGHT
A1	10	#5	1	7'-2"	75	7'-2"	75
A2	44	#4	2	5'-7"	164	5'-7"	164
B6	12	#5	STR	50'-11"	637	50'-11"	637
K1	15	#4	6	7'-2"	72	7'-2"	72
K2	10	#4	STR	2'-7"	17	2'-7"	17
S1	81	#4	3	8'-6"	460	8'-6"	460
S2	81	#4	3	5'-8"	307	5'-8"	307
S3	141	#4	3	4'-10"	455	4'-10"	455
S4	60	#4	4	5'-10"	234	5'-10"	234
✱ S5	138	#5	5	5'-10"	840	--	--
REINFORCING STEEL					2421 LBS.		2421 LBS.
✱ EPOXY COATED REINF. STEEL					840 LBS.		
7500 P.S.I. CONCRETE					19.6 CU. YDS.		19.4 CU. YDS.
0.6" Ø L.R. STRANDS					No. 32		No. 32

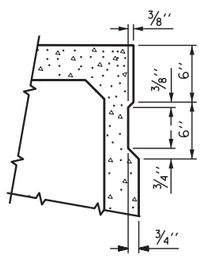

SHEAR KEY DETAIL

NOTE: OMIT SHEAR KEY ON OUTSIDE FACE OF EXTERIOR BOX BEAMS.

GRADE 270 STRANDS	
	0.6" Ø L.R.
AREA (SQUARE INCHES)	0.217
ULTIMATE STRENGTH (LBS. PER STRAND)	58,600
APPLIED PRESTRESS (LBS. PER STRAND)	43,950

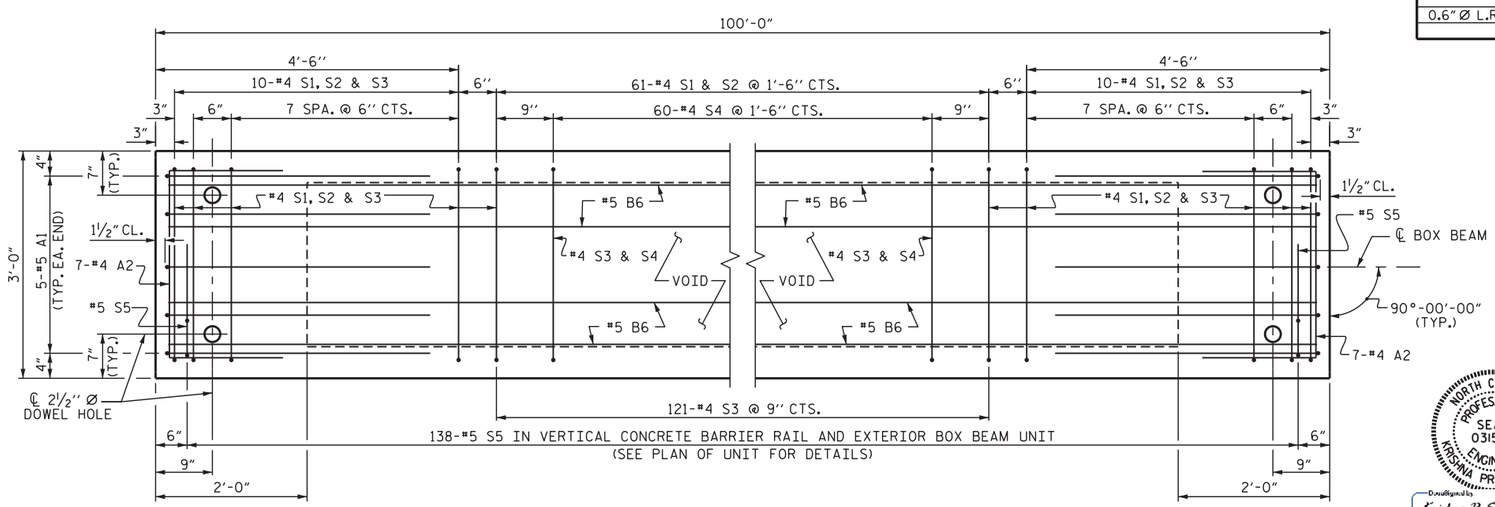

PLAN OF BOX BEAM

EXTERIOR UNIT SHOWN, INTERIOR UNIT SIMILAR EXCEPT OMIT #5 S5 BARS.
FOR LOCATION OF DIAPHRAGMS, SEE "PLAN OF UNIT".
FOR THREADED INSERTS, SEE "THREADED INSERT DETAIL".
FOR REINFORCING STEEL IN DIAPHRAGMS, SEE "DOUBLE DIAPHRAGM DETAILS".

PROJECT NO. B-5749
SCOTLAND COUNTY
STATION: 16+37.50-L-

SHEET 3 OF 5

STATE OF NORTH CAROLINA
DEPARTMENT OF TRANSPORTATION
RALEIGH
STANDARD

3'-0" X 3'-3" PRESTRESSED CONCRETE BOX BEAM UNIT

NORTH CAROLINA PROFESSIONAL SEAL 031583 ENGINEER KRISHNA PRASAD SEDAI

Digitally signed by Krishna P. Sedai
EMAIL=ksedai@ncdot.gov
8/5/2016

DOCUMENT NOT CONSIDERED FINAL UNLESS ALL SIGNATURES COMPLETED

REVISIONS								SHEET NO.
NO.	BY:	DATE:	NO.	BY:	DATE:			S-7
1			3					TOTAL SHEETS
2			4					16

ASSEMBLED BY : D.A. DAVENPORT DATE : 5/5/16
CHECKED BY : K.P. SEDAI DATE : 5/9/16
DRAWN BY : DGE 11/11 REV. 9/14 MAA/TMG
CHECKED BY : TMG 11/11

05-AUG-2016 09:34
R:\Structures\Plans\B5749_SMU_BB.dgn
hbdesal

STD. NO. 39PCBB6_90S_100L

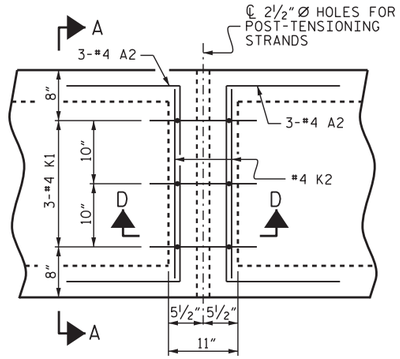

PLAN

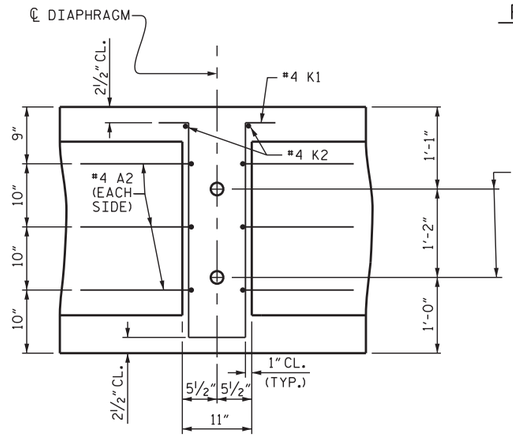

SECTION D-D

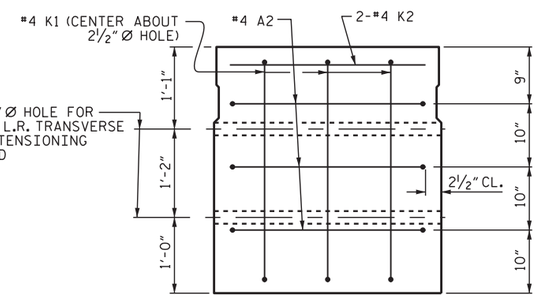

SECTION A-A

VOIDS NOT SHOWN

DOUBLE DIAPHRAGM DETAILS

#4 "S" BARS NOT SHOWN. #4 "S" BARS MAY BE SHIFTED SLIGHTLY TO CLEAR 2½" Ø HOLE.

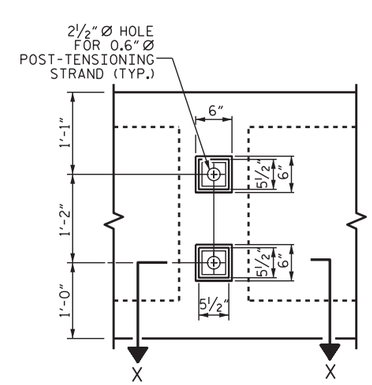

VIEW Y-Y

SHOWING ELEVATION VIEW OF GROUTED RECESS

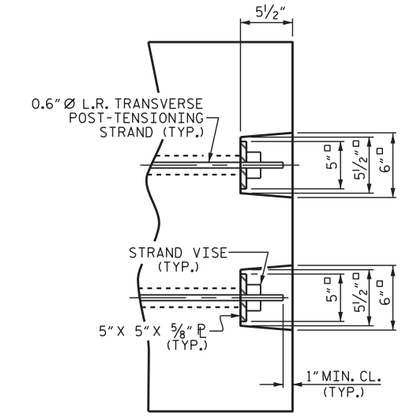

DETAIL "C"

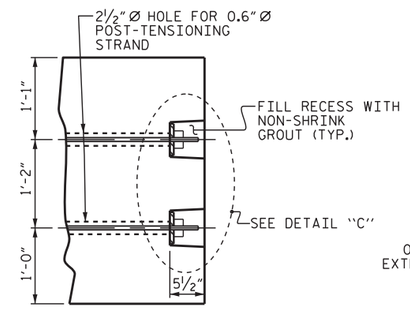

PART SECTION AT RECESS

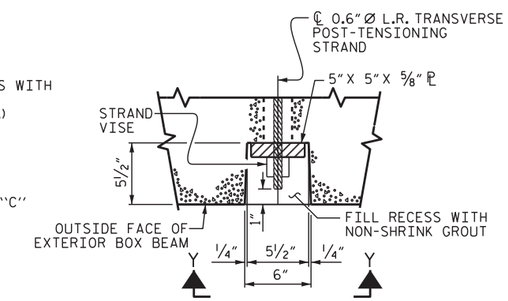

SECTION X-X

SHOWING PLAN VIEW OF GROUTED RECESS

GROUTED RECESS DETAIL AT END OF POST-TENSIONED STRANDS OF EXTERIOR BOX BEAM

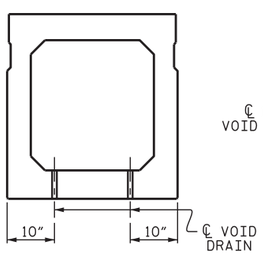

SECTION B-B

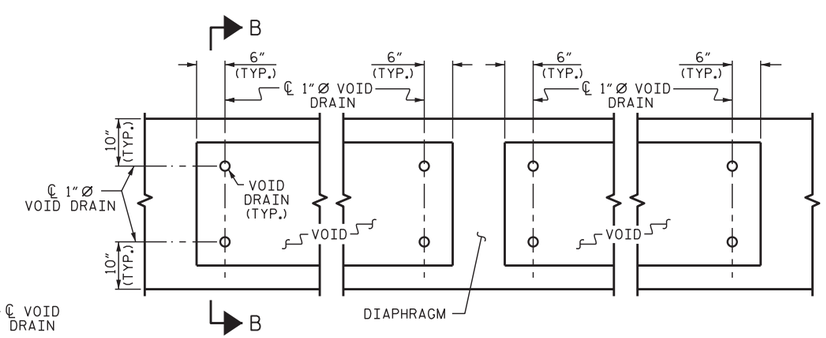

PART PLAN

VOID DRAIN DETAILS

(DIMENSIONS SHOWN ARE TYPICAL FOR EACH VOID)

DEAD LOAD DEFLECTION AND CAMBER	
	3'-0" x 3'-3"
100' BOX BEAM UNIT	0.6"Ø L.R. STRAND
CAMBER (SLAB ALONE IN PLACE)	2" ↑
DEFLECTION DUE TO SUPERIMPOSED DEAD LOAD**	⅞" ↓
FINAL CAMBER	1⅛" ↑

** INCLUDES FUTURE WEARING SURFACE

PROJECT NO. B-5749

SCOTLAND COUNTY

STATION: 16+37.50-L-

SHEET 4 OF 5

STATE OF NORTH CAROLINA
DEPARTMENT OF TRANSPORTATION
RALEIGH

STANDARD

3'-0" X 3'-3"
PRESTRESSED CONCRETE
BOX BEAM UNIT

NORTH CAROLINA PROFESSIONAL SEAL 031583 ENGINEER KRISHNA PRASAD SEDAI

Krishna P. Sedai
8/5/2016

DOCUMENT NOT CONSIDERED FINAL UNLESS ALL SIGNATURES COMPLETED

REVISIONS						SHEET NO.
NO.	BY:	DATE:	NO.	BY:	DATE:	S-8
1			3			TOTAL SHEETS
2			4			16

ASSEMBLED BY : D.A. DAVENPORT DATE : 5/5/16
CHECKED BY : K.P. SEDAI DATE : 5/9/16
DRAWN BY : DGE II/II
CHECKED BY : TMG II/II
REV. 8/14 MAA/TMG

05-AUG-2016 09:34
R:\Structures\Plans\B5749_SMU_BB.dgn
hbdesai

STD.NO.39PCBB7_90S

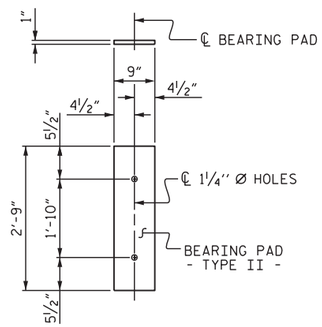

FIXED END

(TYPE II - 22 REQ'D)

ELASTOMERIC BEARING DETAILS

ELASTOMER IN ALL BEARINGS SHALL BE 60 DUROMETER HARDNESS.

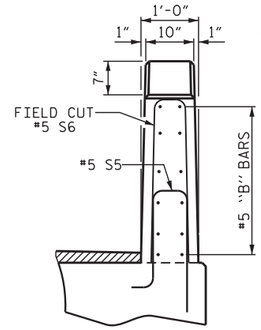

END VIEW

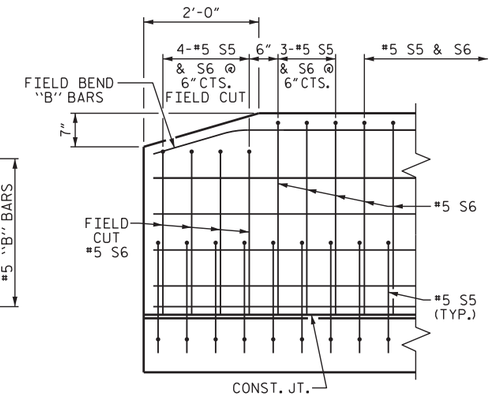

SIDE VIEW

END OF RAIL DETAILS

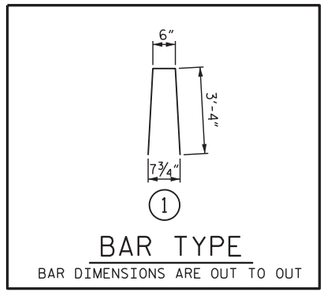

BAR TYPE

BAR DIMENSIONS ARE OUT TO OUT

BOX BEAM UNITS REQUIRED			
	NUMBER	LENGTH	TOTAL LENGTH
EXTERIOR B.B.	2	100'-0"	200'-0"
INTERIOR B.B.	9	100'-0"	900'-0"
TOTAL	11	———	1100'-0"

GUTTERLINE ASPHALT THICKNESS & RAIL HEIGHT		
	ASPHALT OVERLAY THICKNESS @ MID-SPAN	RAIL HEIGHT @ MID-SPAN
100' UNITS	2⅜"	3'-8⅜"

BILL OF MATERIAL FOR VERTICAL CONCRETE BARRIER RAIL					
BAR	BARS PER PAIR OF EXTERIOR UNITS	SIZE	TYPE	LENGTH	WEIGHT
	100' UNIT				
✱B12	96	#5	STR	24'-7"	2461
✱ S6	276	#5	1	7'-2"	2063
✱EPOXY COATED REINFORCING STEEL			LBS.		4524
CLASS AA CONCRETE			CU.YDS.		25.9
TOTAL VERTICAL CONCRETE BARRIER RAIL			LN. FT.		200.0

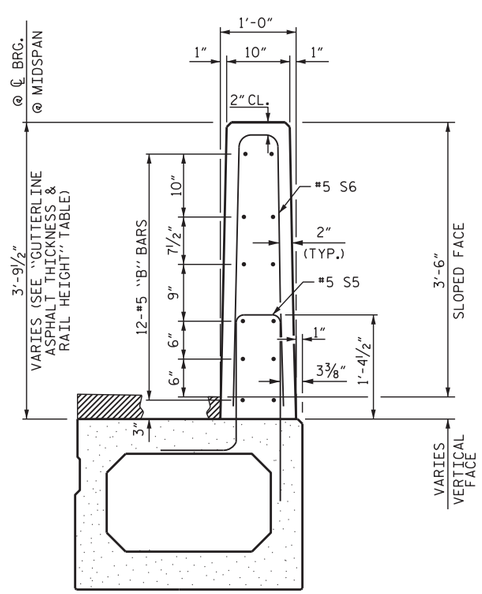

SECTION THRU RAIL

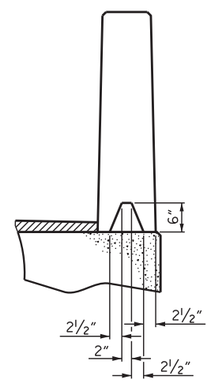

SECTION S-S

AT DAM IN OPEN JOINT
(THIS IS TO BE USED ONLY
WHEN SLIP FORM IS USED)

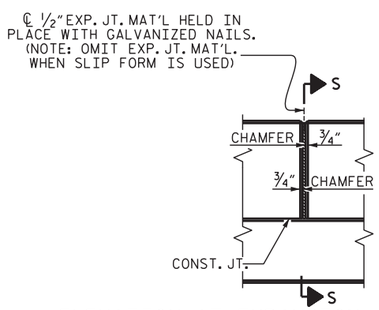

ELEVATION AT EXPANSION JOINTS

VERTICAL CONCRETE BARRIER RAIL DETAILS

PROJECT NO. B-5749

SCOTLAND COUNTY

STATION: 16+37.50-L-

SHEET 5 OF 5

STATE OF NORTH CAROLINA
DEPARTMENT OF TRANSPORTATION
RALEIGH

STANDARD

3'-0" X 3'-3"
PRESTRESSED CONCRETE
BOX BEAM UNIT

NORTH CAROLINA PROFESSIONAL SEAL 031583 ENGINEER KRISHNA PRASAD SEDAI

Digitally signed by Krishna P. Sedai
DN: cn=CN=1087432, 8/5/2016

DOCUMENT NOT CONSIDERED FINAL UNLESS ALL SIGNATURES COMPLETED

REVISIONS							
NO.	BY:	DATE:	NO.	BY:	DATE:	SHEET NO.	
1			3			S-9	
2			4			TOTAL SHEETS	
						16	

ASSEMBLED BY : D.A. DAVENPORT DATE : 5/5/16
CHECKED BY : K.P. SEDAI DATE : 5/12/16

DRAWN BY : DGE 10/11
CHECKED BY : TMG 11/11

REV. 4/15 MAA/TMG

05-AUG-2016 09:34
R:\Structures\Plans\B5749_SMU_BB.dgn
hbdesai

STD. NO. 39PCBB8_90S

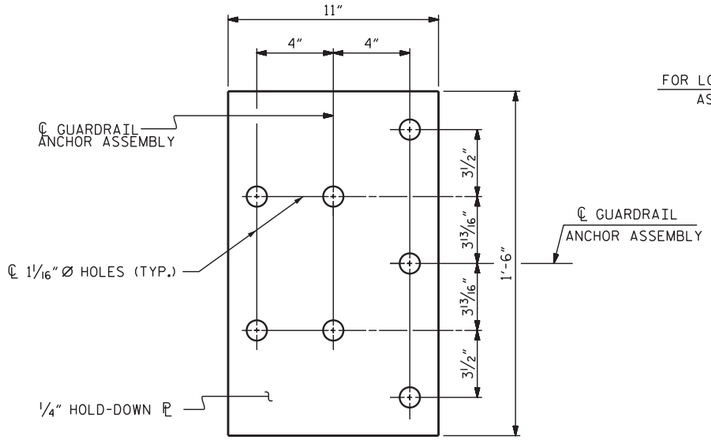

PLAN

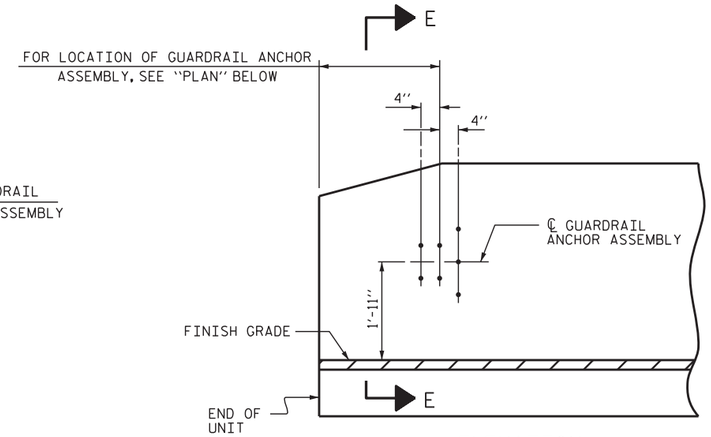

ELEVATION

NOTES

THE GUARDRAIL ANCHOR ASSEMBLY SHALL CONSIST OF A 1/4" HOLD DOWN PLATE AND 7 - 7/8" Ø BOLTS WITH NUTS AND WASHERS.

THE HOLD-DOWN PLATE SHALL CONFORM TO AASHTO M270 GRADE 36. AFTER FABRICATION, THE HOLD-DOWN PLATE SHALL BE HOT-DIP GALVANIZED IN ACCORDANCE WITH AASHTO M111.

BOLTS SHALL CONFORM TO THE REQUIREMENTS OF ASTM A307 AND NUTS SHALL CONFORM TO THE REQUIREMENTS OF AASHTO M291. BOLTS, NUTS AND WASHERS SHALL BE GALVANIZED. (AT THE CONTRACTOR'S OPTION, STAINLESS STEEL BOLTS, NUTS AND WASHERS MAY BE USED AS AN ALTERNATE FOR THE 7/8" Ø GALVANIZED BOLTS, NUTS AND WASHERS. THEY SHALL CONFORM TO OR EXCEED THE MECHANICAL REQUIREMENTS OF ASTM A307. THE USE OF THIS ALTERNATE SHALL BE APPROVED BY THE ENGINEER.)

THE GUARDRAIL ANCHOR ASSEMBLY IS REQUIRED AT ALL POINTS WHERE APPROACH GUARDRAIL IS TO BE ATTACHED TO THE END OF BARRIER RAIL. FOR POINTS OF ATTACHMENT, SEE SKETCH.

AFTER INSTALLATION, THE EXPOSED THREAD OF THE BOLT SHALL BE BURRED WITH A SHARP POINTED TOOL.

THE COST OF THE GUARDRAIL ANCHOR ASSEMBLY SHALL BE INCLUDED IN THE UNIT CONTRACT PRICE BID FOR VERTICAL CONCRETE BARRIER RAIL.

THE VERTICAL REINFORCING BARS MAY BE SHIFTED SLIGHTLY IN THE VERTICAL CONCRETE BARRIER RAIL TO CLEAR ASSEMBLY BOLTS.

THE 1 1/4" Ø HOLES SHALL BE FORMED OR DRILLED WITH A CORE BIT. IMPACT TOOLS WILL NOT BE PERMITTED. ANY CONCRETE DAMAGED BY THIS WORK SHALL BE REPAIRED TO THE SATISFACTION OF THE ENGINEER.

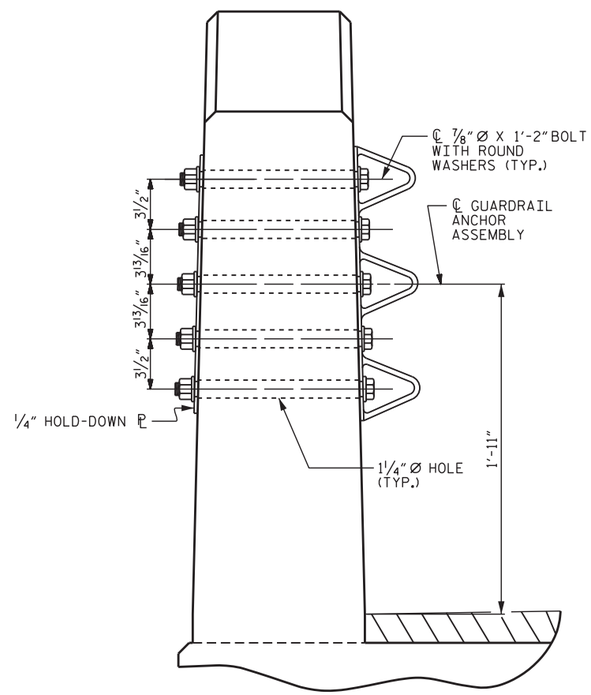

SECTION E-E

GUARDRAIL ANCHOR ASSEMBLY DETAILS

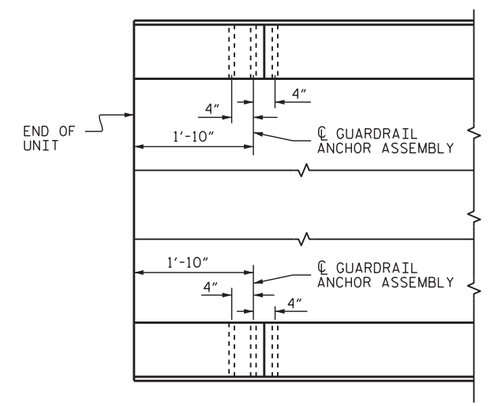

PLAN

LOCATION OF ANCHORS FOR GUARDRAIL

END BENT #1 SHOWN, END BENT #2 SIMILAR.

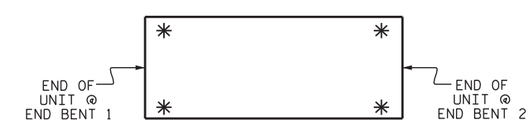

SKETCH SHOWING POINTS OF ATTACHMENT

✳ DENOTES GUARDRAIL ANCHOR ASSEMBLY

PROJECT NO. B-5749
SCOTLAND COUNTY
STATION: 16+37.50-L-

NORTH CAROLINA PROFESSIONAL SEAL 031583 ENGINEER KRISHNA PRASAD SEDAI

Docusigned by: Krishna P. Sedai
8/5/2016

STATE OF NORTH CAROLINA
DEPARTMENT OF TRANSPORTATION
RALEIGH

STANDARD
GUARDRAIL ANCHORAGE DETAILS
FOR VERTICAL CONCRETE BARRIER RAIL

REVISIONS								SHEET NO.
NO.	BY:	DATE:		NO.	BY:	DATE:		S-10
1				3				TOTAL SHEETS
2				4				16

DOCUMENT NOT CONSIDERED FINAL UNLESS ALL SIGNATURES COMPLETED

ASSEMBLED BY : D.A. DAVENPORT	DATE : 5/5/16		
CHECKED BY : K.P. SEDAI	DATE : 5/12/16		
DRAWN BY : MAA 5/10	REV. 12/5/11	MAA/GM	
CHECKED BY : GM 5/10	REV. 6/13	MAA/GM	
	REV. 1/15	MAA/TMG	

05-AUG-2016 09:34
R:\Structures\Plans\B5749_SMU_GR.dgn
hbdesai

(SHT 1) STD. NO. GRA3

NOTES

STIRRUPS IN CAP MAY BE SHIFTED AS NECESSARY TO CLEAR DOWELS.

THE CONCRETE IN THE SHADED AREA OF THE WING SHALL BE POURED AFTER THE VERTICAL CONCRETE BARRIER RAIL IS CAST IF SLIP FORMING IS USED.

FOR PILE SPLICE DETAILS, SEE SHEET 4 OF 4.

FOR WING DETAILS, SEE SHEET 3 OF 4.

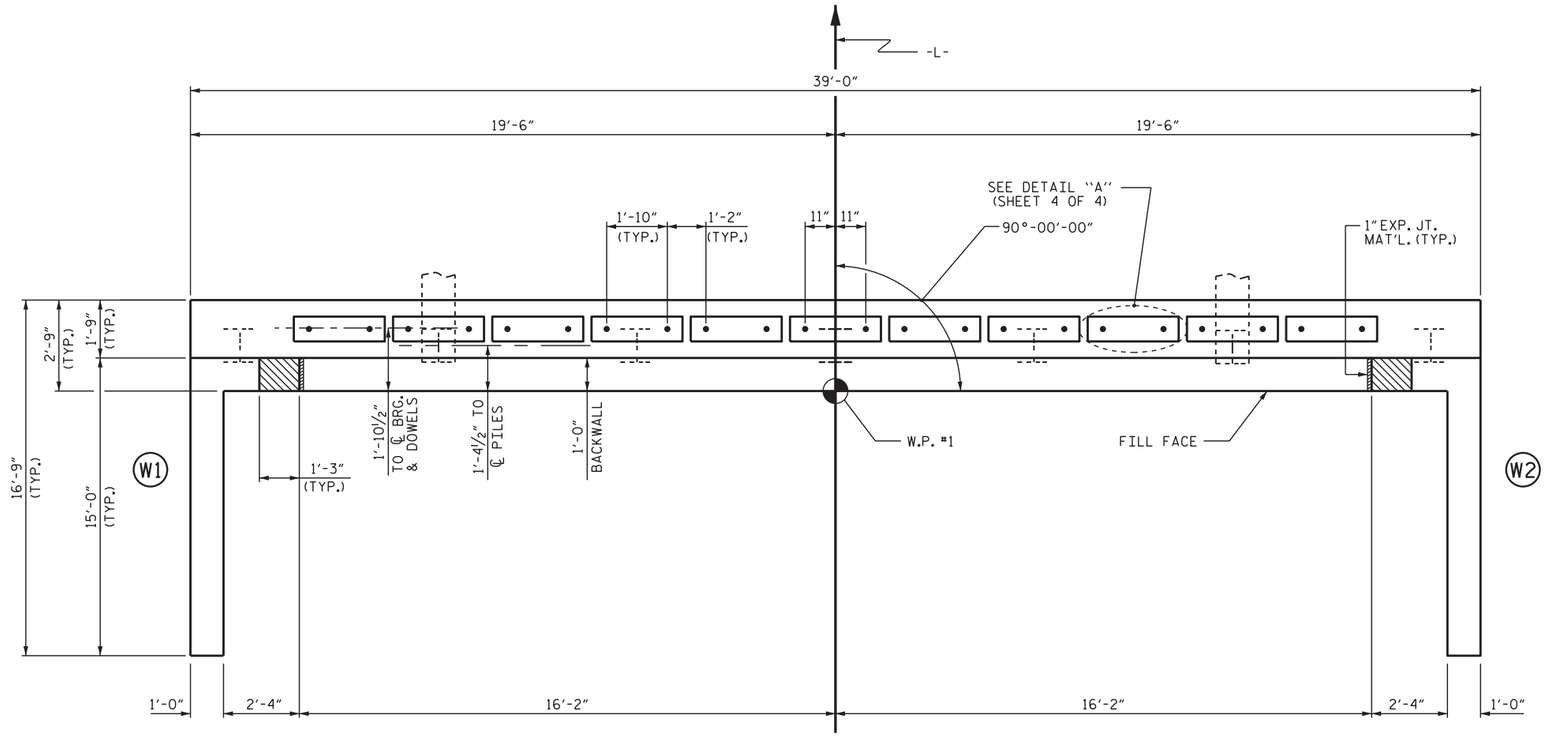

PLAN

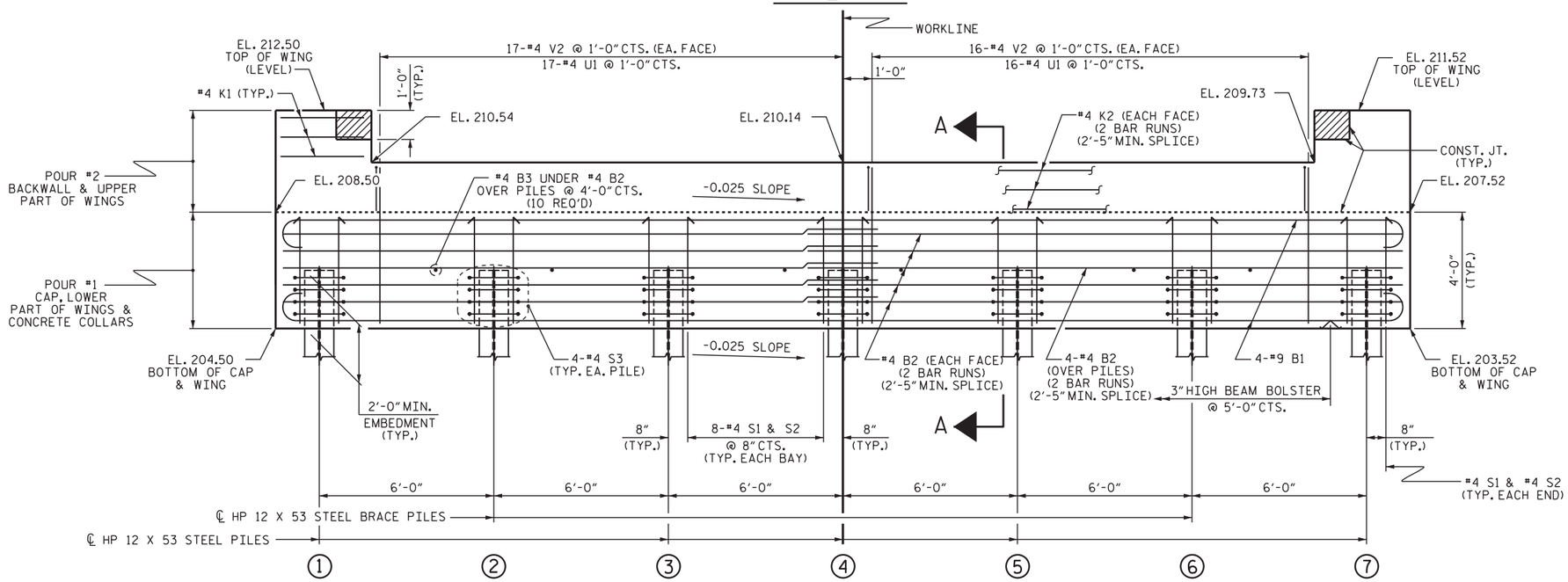

ELEVATION

WINGS NOT SHOWN FOR CLARITY.
FOR SECTION A-A, SEE SHEET 4 OF 4.
CONCRETE COLLARS FOR STEEL PILES NOT SHOWN IN PLAN AND ELEVATION VIEWS FOR CLARITY.
SEE "CORROSION PROTECTION FOR STEEL PILES DETAIL", SHEET 4 OF 4.

TOP OF PILE ELEVATIONS	
1	206.48
2	206.33
3	206.18
4	206.03
5	205.88
6	205.73
7	205.58

PROJECT NO. B-5749
SCOTLAND COUNTY
STATION: 16+37.50-L-

SHEET 1 OF 4

STATE OF NORTH CAROLINA
DEPARTMENT OF TRANSPORTATION
RALEIGH

SUBSTRUCTURE

END BENT No. 1

NORTH CAROLINA PROFESSIONAL SEAL 031583 ENGINEER KRISHNA PRASAD SEDAI

DocuSigned by: Krishna P. Sedai
E2B7F7C4-F0B54B7...
8/5/2016

ASSEMBLED BY : D.A. DAVENPORT	DATE : 5/5/16
CHECKED BY : K.P. SEDAI	DATE : 5/12/16
DRAWN BY : WJH 12/11	REV. 4/15 MAA/TMG
CHECKED BY : AAC 12/11	

DOCUMENT NOT CONSIDERED FINAL UNLESS ALL SIGNATURES COMPLETED

REVISIONS						SHEET NO.
NO.	BY:	DATE:	NO.	BY:	DATE:	S-11
1			3			TOTAL SHEETS
2			4			16

05-AUG-2016 09:34
R:\Structures\Plans\B5749_SMU_E1.dgn
hbdesai

STD. NO. EB_33_90S4_39BB

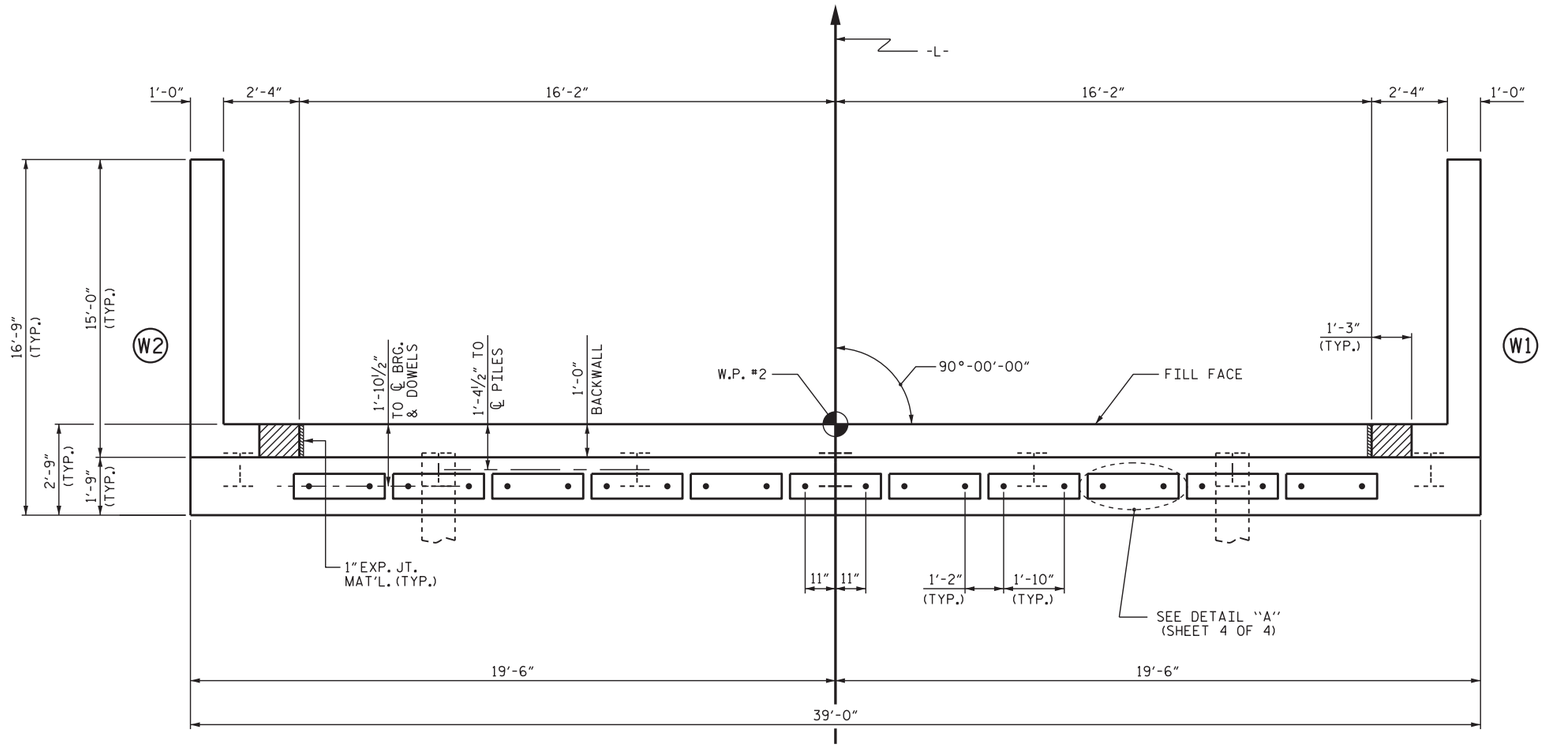

PLAN

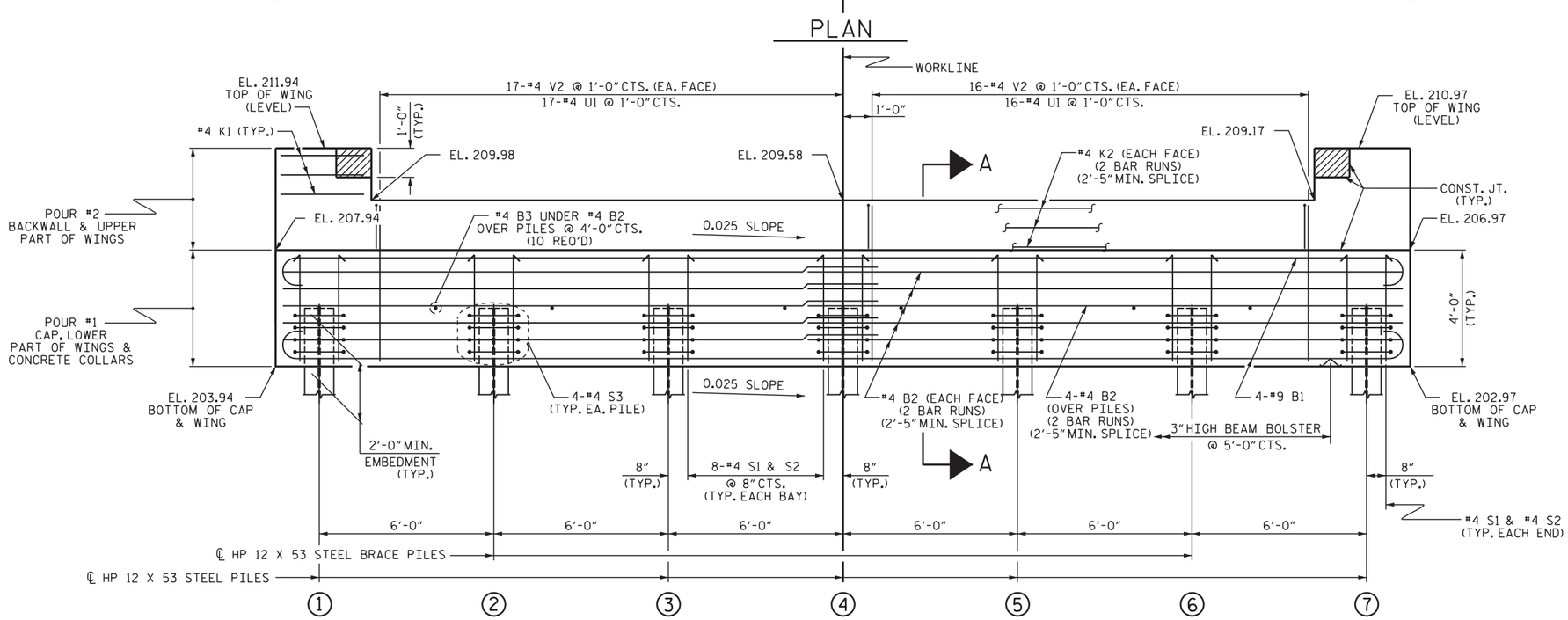

ELEVATION

WINGS NOT SHOWN FOR CLARITY.
FOR SECTION A-A, SEE SHEET 4 OF 4.
CONCRETE COLLARS FOR STEEL PILES NOT SHOWN IN PLAN AND ELEVATION VIEWS FOR CLARITY.
SEE "CORROSION PROTECTION FOR STEEL PILES DETAIL", SHEET 4 OF 4.

NOTES

STIRRUPS IN CAP MAY BE SHIFTED AS NECESSARY TO CLEAR DOWELS.

THE CONCRETE IN THE SHADED AREA OF THE WING SHALL BE POURED AFTER THE VERTICAL CONCRETE BARRIER RAIL IS CAST IF SLIP FORMING IS USED.

FOR PILE SPLICE DETAILS, SEE SHEET 4 OF 4.

FOR WING DETAILS, SEE SHEET 3 OF 4.

TOP OF PILE ELEVATIONS	
1	205.92
2	205.77
3	205.62
4	205.47
5	205.32
6	205.17
7	205.02

PROJECT NO. B-5749
SCOTLAND COUNTY
STATION: 16+37.50-L-

SHEET 2 OF 4

STATE OF NORTH CAROLINA
DEPARTMENT OF TRANSPORTATION
RALEIGH

SUBSTRUCTURE

END BENT No. 2

NORTH CAROLINA PROFESSIONAL SEAL 031583 ENGINEER KRISHNA PRASAD SEDAI

DocuSigned by: Krishna P. Sedai
E2B7F7C4-F0B54B7...
8/5/2016

ASSEMBLED BY : D.A. DAVENPORT DATE : 5/5/16
CHECKED BY : K.P. SEDAI DATE : 5/12/16
DRAWN BY : WJH 12/11
CHECKED BY : AAC 12/11
REV. 4/15 MAA/TMG

DOCUMENT NOT CONSIDERED FINAL UNLESS ALL SIGNATURES COMPLETED

REVISIONS						SHEET NO.
NO.	BY:	DATE:	NO.	BY:	DATE:	S-12
1			3			TOTAL SHEETS
2			4			16

05-AUG-2016 09:34
R:\Structures\Plans\B5749_SMU_E1.dgn
hbdesai

STD. NO. EB_33_90S4_39BB

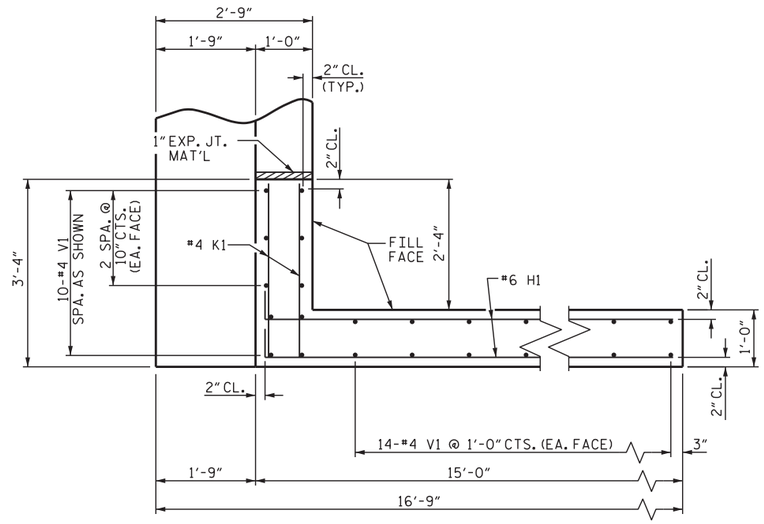

PLAN OF WING (W1)

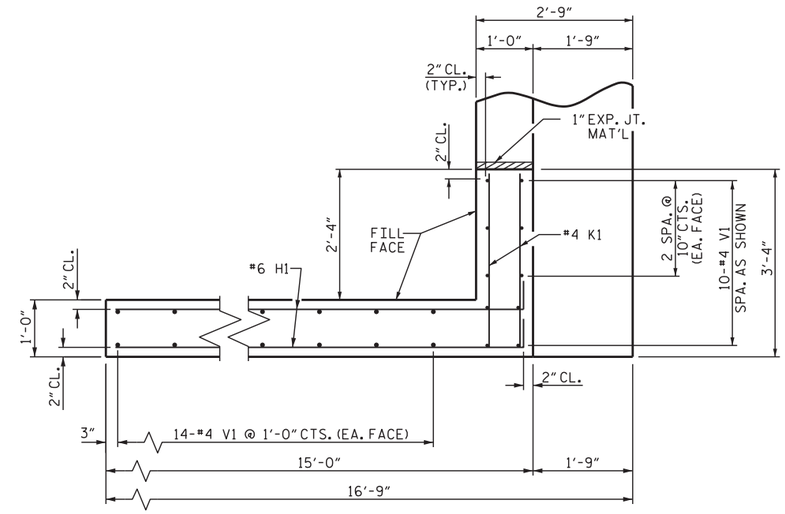

PLAN OF WING (W2)

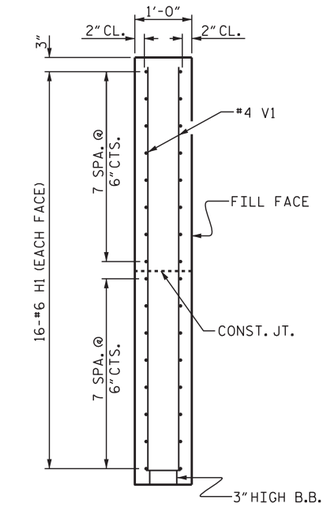

SECTION X-X

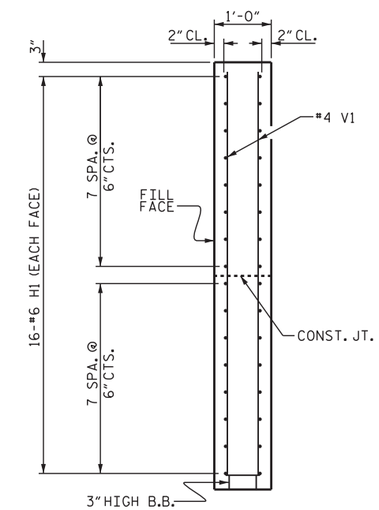

SECTION Y-Y

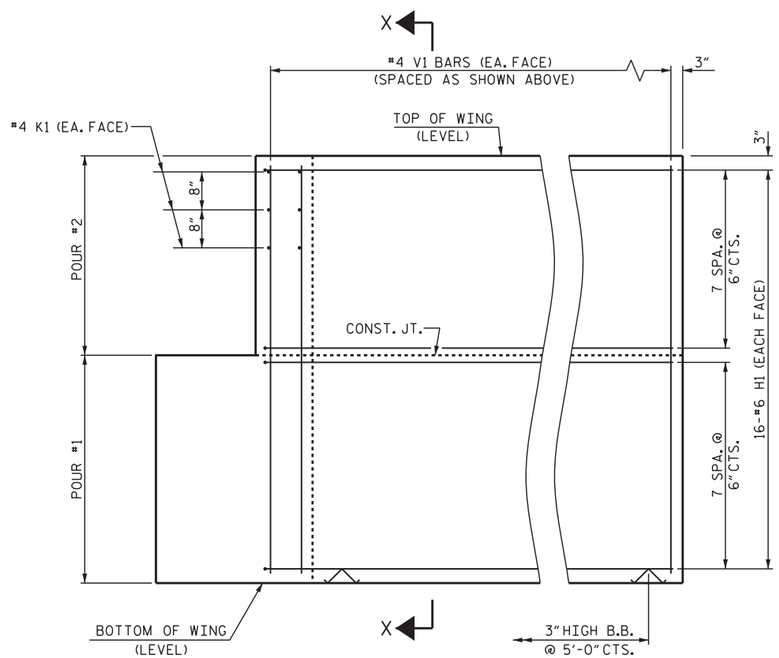

ELEVATION OF WING (W1)

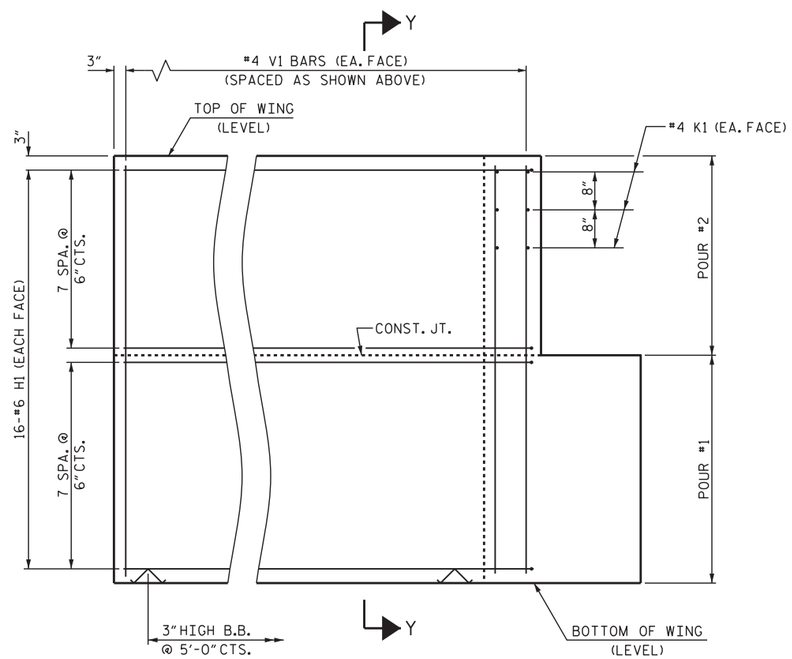

ELEVATION OF WING (W2)

WING DETAILS

PROJECT NO. B-5749
SCOTLAND COUNTY
STATION: 16+37.50-L-

SHEET 3 OF 4

STATE OF NORTH CAROLINA
DEPARTMENT OF TRANSPORTATION
RALEIGH

SUBSTRUCTURE

END BENT
WING DETAILS

NORTH CAROLINA PROFESSIONAL SEAL 031583 ENGINEER KRISHNA PRASAD SEDAI

Digitally signed by Krishna P. Sedai
8/5/2016

ASSEMBLED BY : D.A. DAVENPORT	DATE : 5/5/16
CHECKED BY : K.P. SEDAI	DATE : 5/12/16
DRAWN BY : WJH 12/11	REV. 4/15 MAA/TMG
CHECKED BY : AAC 12/11	

DOCUMENT NOT CONSIDERED FINAL UNLESS ALL SIGNATURES COMPLETED

REVISIONS							SHEET NO.
NO.	BY:	DATE:	NO.	BY:	DATE:		S-13
1			3				TOTAL SHEETS
2			4				16

05-AUG-2016 09:34
R:\Structures\Plans\B5749_SMU_E1.dgn
hbdesai

STD. NO. EB_33_90S4_39BB

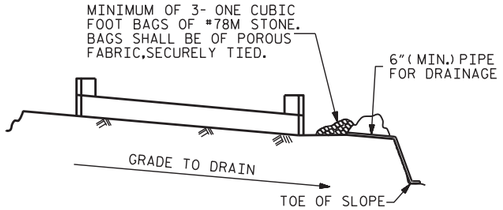

BAGGED STONE AND PIPE SHALL BE PLACED IMMEDIATELY AFTER COMPLETION OF END BENT EXCAVATION. PIPE MAY BE EITHER CONCRETE, CORRUGATED STEEL, CORRUGATED ALUMINUM ALLOY, OR CORRUGATED PLASTIC. PERFORATED PIPE WILL NOT BE ALLOWED.

BAGGED STONE SHALL REMAIN IN PLACE UNTIL THE ENGINEER DIRECTS THAT IT BE REMOVED. THE CONTRACTOR SHALL REMOVE AND DISPOSE OF SILT ACCUMULATIONS AT BAGGED STONE WHEN SO DIRECTED BY THE ENGINEER. BAGS SHALL BE REMOVED AND REPLACED WHENEVER THE ENGINEER DETERMINES THAT THEY HAVE DETERIORATED AND LOST THEIR EFFECTIVENESS.

NO SEPARATE PAYMENT WILL BE MADE FOR THIS WORK AND THE ENTIRE COST OF THIS WORK SHALL BE INCLUDED IN THE UNIT CONTRACT PRICE BID FOR THE SEVERAL PAY ITEMS.

TEMPORARY DRAINAGE AT END BENT

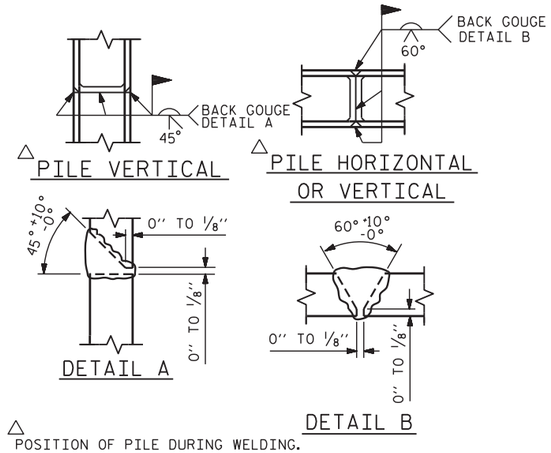

△ POSITION OF PILE DURING WELDING.

PILE SPLICE DETAILS

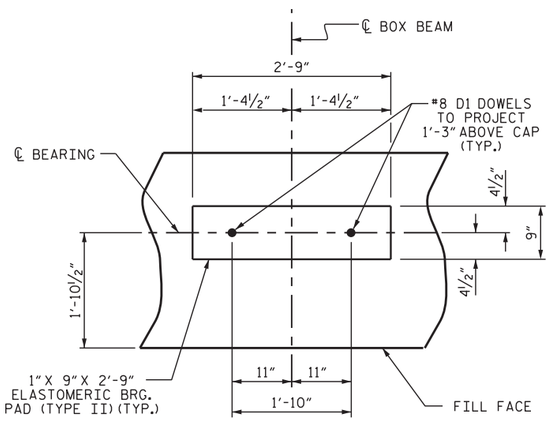

DETAIL "A"

(END BENT No. 1 SHOWN, END BENT No. 2 SIMILAR BY ROTATION)

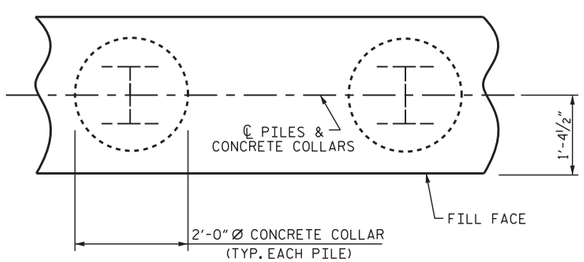

PLAN

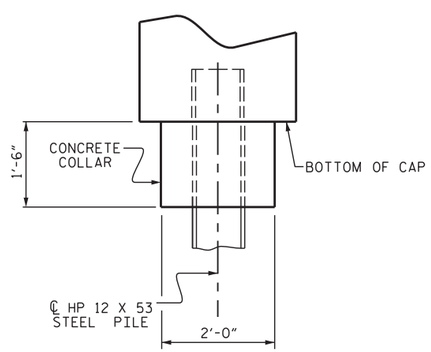

ELEVATION

CORROSION PROTECTION FOR STEEL PILES DETAIL

(END BENT No. 1 SHOWN, END BENT No. 2 SIMILAR BY ROTATION)

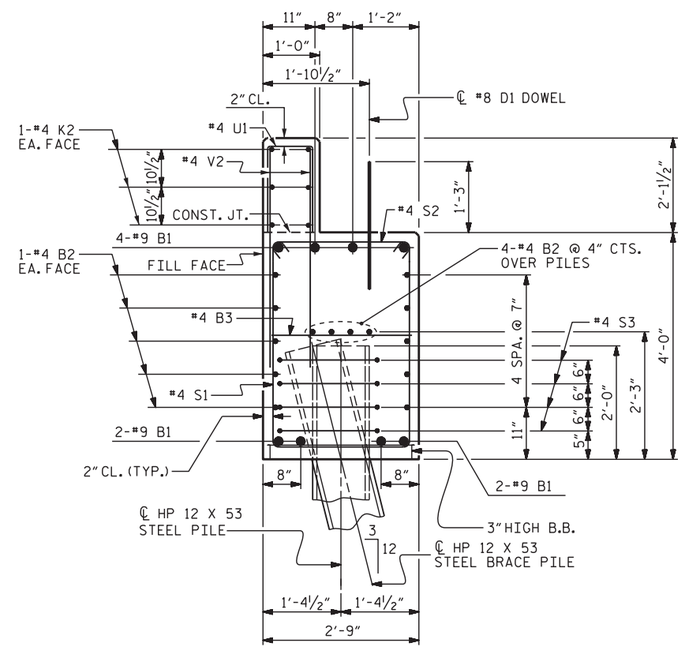

SECTION A-A

(CONCRETE COLLAR NOT SHOWN FOR CLARITY. SEE "CORROSION PROTECTION FOR STEEL PILES DETAIL.")

BAR TYPES

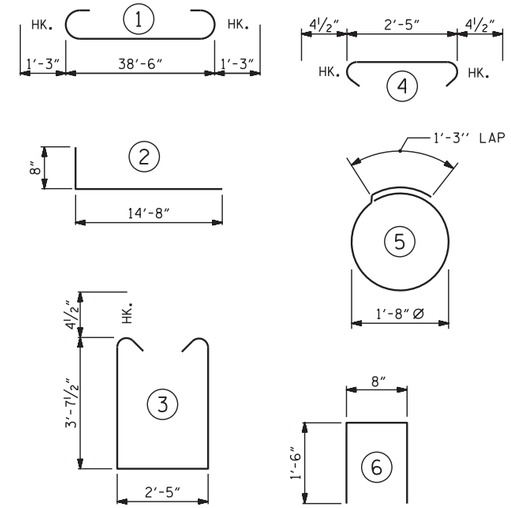

ALL BAR DIMENSIONS ARE OUT TO OUT.

END BENT No. 1	END BENT No. 2
HP 12 X 53 STEEL PILES	HP 12 X 53 STEEL PILES
NO: 7 LIN. FT.= 490	NO: 7 LIN. FT.= 560
PILE REDRIVES EA. 7	PILE REDRIVES EA. 7

BILL OF MATERIAL FOR ONE END BENT

BAR	NO.	SIZE	TYPE	LENGTH	WEIGHT
B1	8	#9	1	41'-0"	1115
B2	28	#4	STR	20'-7"	385
B3	10	#4	STR	2'-5"	16
D1	22	#8	STR	2'-3"	132
H1	64	#6	2	15'-4"	1474
K1	12	#4	STR	2'-11"	23
K2	12	#4	STR	20'-7"	165
S1	50	#4	3	10'-5"	348
S2	50	#4	4	3'-2"	106
S3	28	#4	5	6'-6"	122
U1	33	#4	6	3'-8"	81
V1	76	#4	STR	7'-8"	389
V2	66	#4	STR	5'-9"	254

REINFORCING STEEL (FOR ONE END BENT) 4610 LBS.

CLASS A CONCRETE BREAKDOWN (FOR ONE END BENT)

POUR #1 CAP, LOWER PART OF WINGS & COLLARS 21.3 C.Y.

POUR #2 BACKWALL & UPPER PART OF WINGS 7.7 C.Y.

TOTAL CLASS A CONCRETE 29.0 C.Y.

PROJECT NO. B-5749
SCOTLAND COUNTY
STATION: 16+37.50-L-

SHEET 4 OF 4

STATE OF NORTH CAROLINA
DEPARTMENT OF TRANSPORTATION
RALEIGH

SUBSTRUCTURE

END BENT No. 1 & 2 DETAILS

NORTH CAROLINA PROFESSIONAL SEAL 031583 ENGINEER KRISHNA PRASAD SEDAI

DocuSigned by: Krishna P. Sedai
E2E772C4-D87C82
8/5/2016

DOCUMENT NOT CONSIDERED FINAL UNLESS ALL SIGNATURES COMPLETED

REVISIONS							SHEET NO.
NO.	BY:	DATE:	NO.	BY:	DATE:		S-14
1			3				TOTAL SHEETS
2			4				16

ASSEMBLED BY : D.A. DAVENPORT	DATE : 5/5/16		
CHECKED BY : K.P. SEDAI	DATE : 7/7/16		
DRAWN BY : WJH 12/11	REV. 8/14	MAA/TMG	
CHECKED BY : AAC 12/11			

05-AUG-2016 14:45
R:\Structures\Plans\B5749_SMU_E1.dgn
ksedai

STD. NO. EB_33_90S4_39BB

NOTES :

FOR BERM WIDTH DIMENSIONS, SEE GENERAL DRAWING.

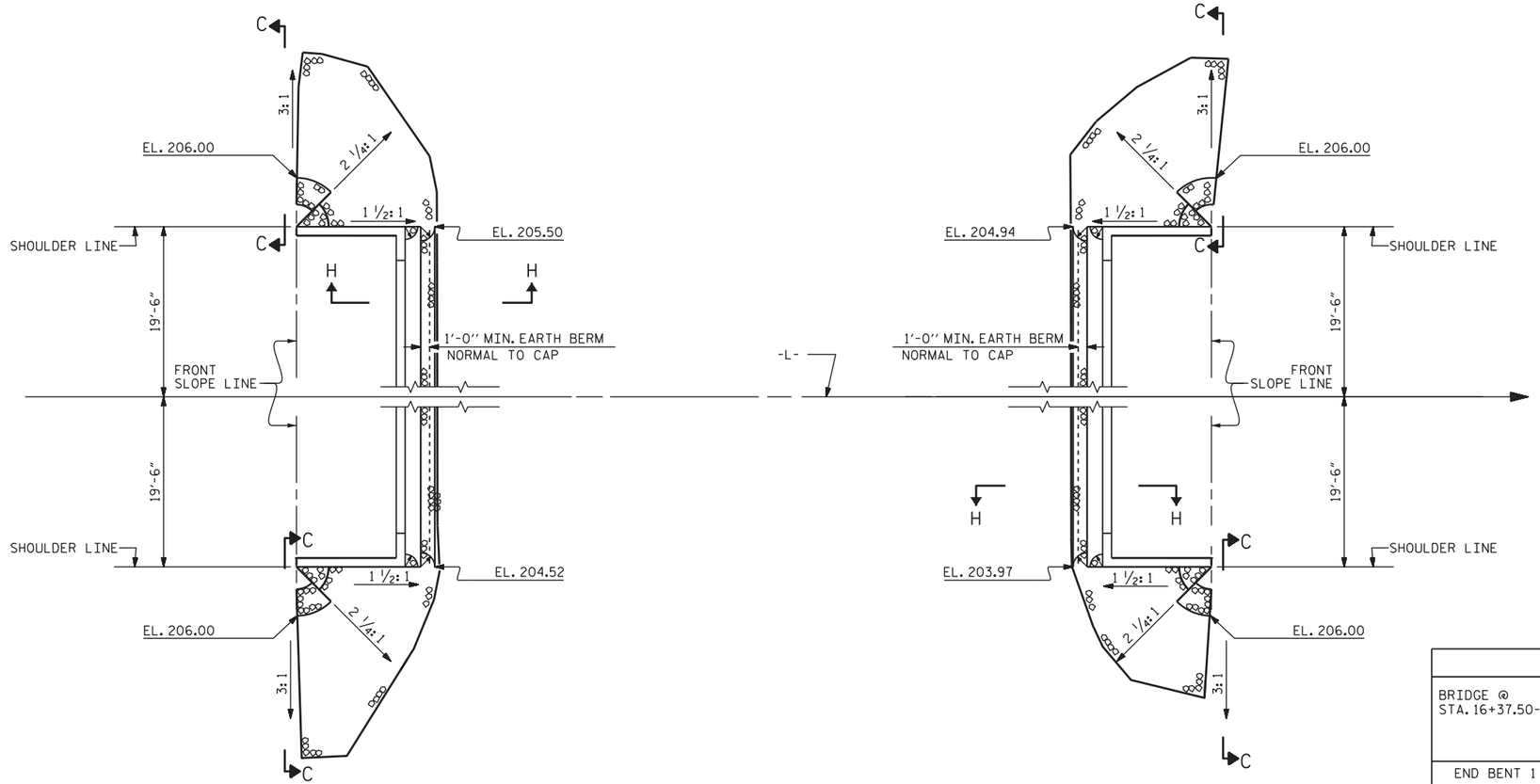

END BENT 1

END BENT 2

PLAN

ESTIMATED QUANTITIES		
BRIDGE @ STA. 16+37.50-L-	RIP RAP CLASS II (2'-0" THICK)	GEOTEXTILE FOR DRAINAGE
	TONS	SQUARE YARDS
END BENT 1	110	120
END BENT 2	100	110

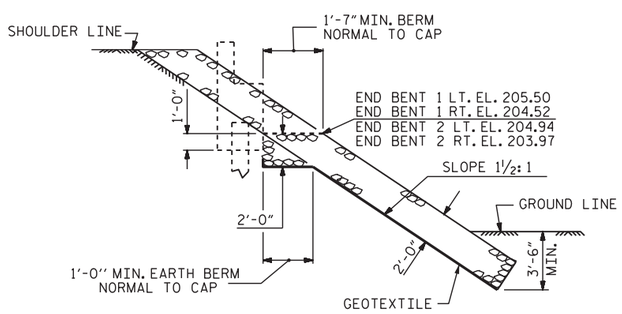

SECTION H-H

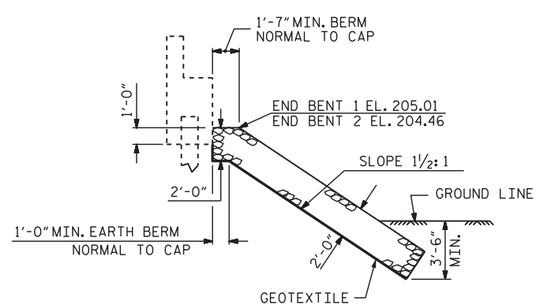

℄ SECTION

BERM RIP RAPPED

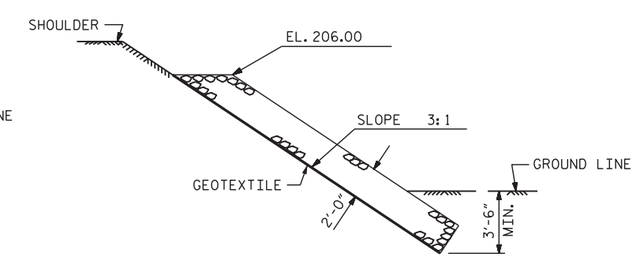

SECTION C-C

PROJECT NO. B-5749

SCOTLAND COUNTY

STATION: 16+37.50-L-

STATE OF NORTH CAROLINA
DEPARTMENT OF TRANSPORTATION
RALEIGH

STANDARD

RIP RAP DETAILS

NORTH CAROLINA PROFESSIONAL SEAL 031583 ENGINEER KRISHNA PRASAD SEDAI

Designed by Krishna P. Sedai
EXP. 8/5/2016

ASSEMBLED BY : D.A. DAVENPORT DATE : 5/5/16		
CHECKED BY : K.P. SEDAI DATE : 5/13/16		
DRAWN BY : REK 1/84	REV. 5/1/06R	TLA/GM
CHECKED BY : RDU 1/84	REV. 10/1/11	MAA/GM
	REV. 12/21/11	MAA/GM

DOCUMENT NOT CONSIDERED FINAL UNLESS ALL SIGNATURES COMPLETED

REVISIONS						SHEET NO.
NO.	BY:	DATE:	NO.	BY:	DATE:	S-15
1			3			TOTAL SHEETS
2			4			16

05-AUG-2016 09:34
R:\Structures\Plans\b5749_SMU_RR.dgn
hbdesai

STD. NO. RR1

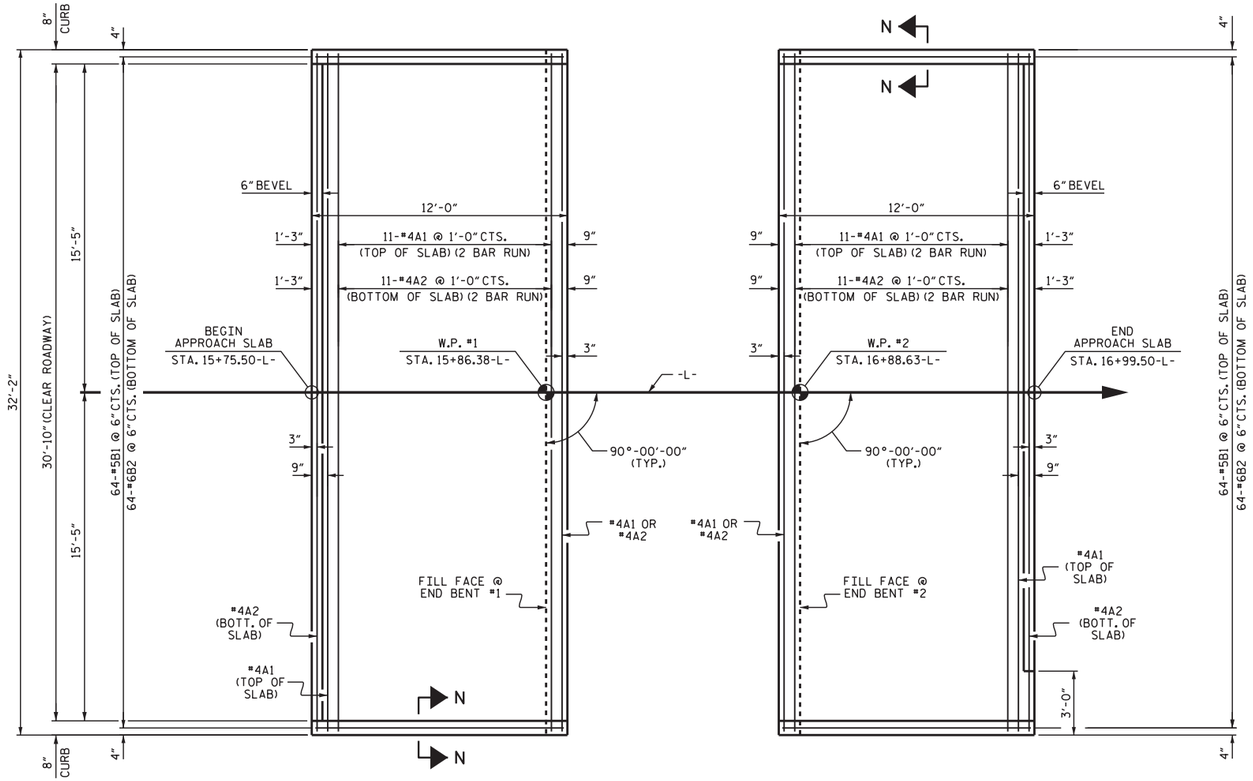

PLAN @ END BENT #1

PLAN @ END BENT #2

DIMENSIONS SHOWN ARE TYPICAL FOR BOTH APPROACH SLABS

NOTES

FOR REINFORCED BRIDGE APPROACH FILL INCLUDING GEOTEXTILE, IMPERMEABLE GEOMEMBRANE, 4" Ø DRAINAGE PIPE, #78M STONE, AND SELECT MATERIAL, SEE ROADWAY PLANS.

AREA BETWEEN THE WINGWALL AND APPROACH SLAB SHALL BE GRADED TO DRAIN THE WATER AWAY FROM THE FILL FACE OF THE BRIDGE AND SHALL BE PAVED. SEE ROADWAY PLANS.

APPROACH SLAB GROOVING IS NOT REQUIRED.

BILL OF MATERIAL

APPROACH SLAB AT EB #1

BAR	NO.	SIZE	TYPE	LENGTH	WEIGHT
* A1	26	#4	STR	16'-11"	294
A2	26	#4	STR	16'-9"	291
* B1	64	#5	STR	11'-2"	745
B2	64	#6	STR	11'-8"	1121
REINFORCING STEEL				LBS.	1412
* EPOXY COATED REINFORCING STEEL				LBS.	1039
CLASS AA CONCRETE				C. Y.	17.0

APPROACH SLAB AT EB #2

BAR	NO.	SIZE	TYPE	LENGTH	WEIGHT
* A1	26	#4	STR	16'-11"	294
A2	26	#4	STR	16'-9"	291
* B1	64	#5	STR	11'-2"	745
B2	64	#6	STR	11'-8"	1121
REINFORCING STEEL				LBS.	1412
* EPOXY COATED REINFORCING STEEL				LBS.	1039
CLASS AA CONCRETE				C. Y.	17.0

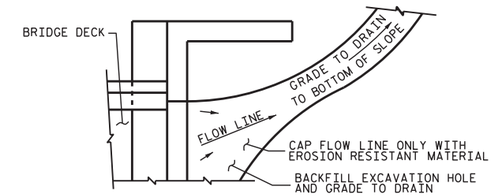

NOTE: IF THE APPROACH SLAB IS NOT CONSTRUCTED IMMEDIATELY AFTER THE BACKFILLING OF THE END BENT EXCAVATION, GRADE TO DRAIN TO THE BOTTOM OF THE SLOPE AND PROVIDE EROSION RESISTANT MATERIAL, SUCH AS FIBERGLASS ROVING OR AS DIRECTED BY THE ENGINEER TO PREVENT SOIL EROSION AND TO PROTECT THE AREA ADJACENT TO THE STRUCTURE. THE CONTRACTOR WILL BE REQUIRED TO REMOVE THESE MATERIALS PRIOR TO CONSTRUCTION OF THE APPROACH SLAB.

TEMPORARY DRAINAGE DETAIL

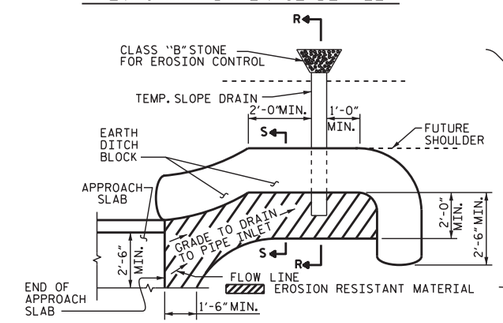

NOTE: IMMEDIATELY AFTER THE CONSTRUCTION OF THE APPROACH SLAB, THE CONTRACTOR SHALL PROVIDE TEMPORARY BERM AND SLOPE DRAIN. CONTRACTOR SHALL GRADE TO PIPE INLET AND PROVIDE EROSION RESISTANT MATERIAL AS SHOWN. THE EROSION RESISTANT MATERIAL SHALL BE EITHER 1) ASPHALT PLANT MIX, TYPE 1 OR TYPE 2, MIN. 2" DEPTH, 2) EROSION CONTROL MAT, OR 3) CONCRETE, AS DIRECTED BY THE ENGINEER. THE SLOPE DRAIN SHALL CONSIST OF A NON-PERFORATED TEMPORARY DRAINAGE PIPE, 12 INCHES IN DIAMETER.

PLAN VIEW

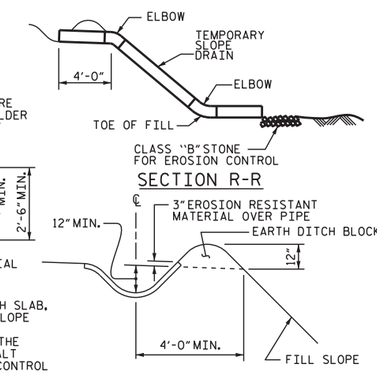

SECTION S-S

TEMPORARY BERM AND SLOPE DRAIN DETAILS

(TO BE USED WHEN SHOULDER BERM GUTTER IS REQUIRED)

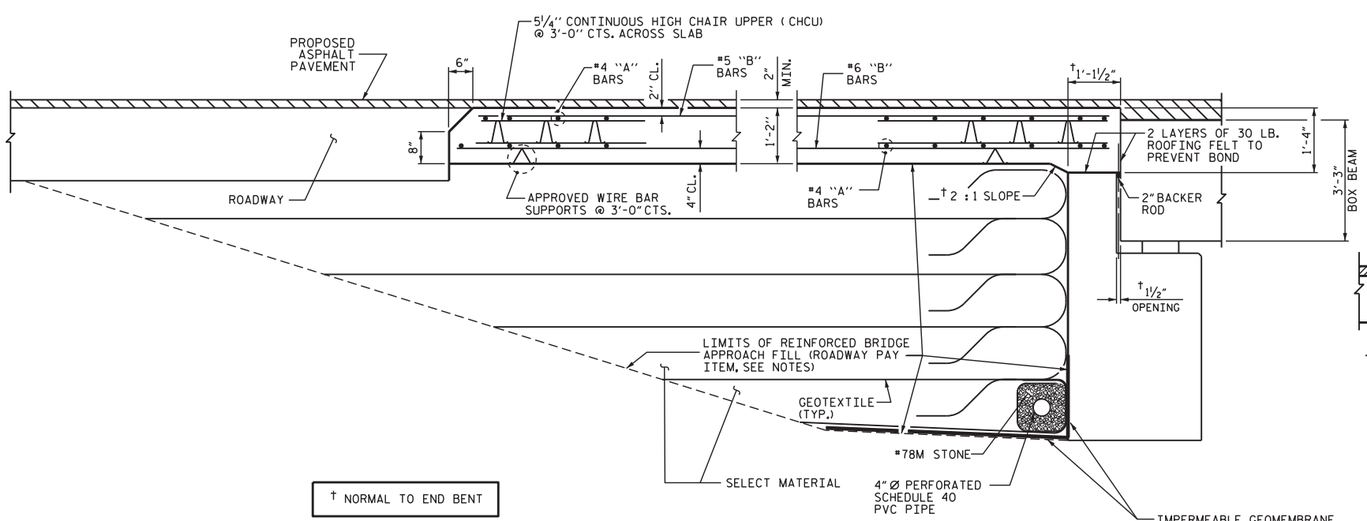

† NORMAL TO END BENT

SECTION THRU SLAB

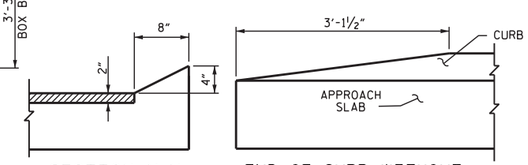

SECTION N-N

END OF CURB WITHOUT SHOULDER BERM GUTTER

CURB DETAILS

SPLICE LENGTHS		
BAR SIZE	EPOXY COATED	UNCOATED
#4	2'-0"	1'-9"
#5	2'-6"	2'-2"
#6	3'-10"	2'-7"

PROJECT NO. B-5749

SCOTLAND COUNTY

STATION: 16+37.50-L-

NORTH CAROLINA PROFESSIONAL SEAL 031583 ENGINEER KRISHNA PRASAD SEDAI

Digitally signed by Krishna P. Sedai
DN: cn=Krishna P. Sedai, c=US, o=NCDOT, ou=Structure Design, email=ksedai@ncdot.gov
8/5/2016

STATE OF NORTH CAROLINA
DEPARTMENT OF TRANSPORTATION
RALEIGH

STANDARD
BRIDGE APPROACH SLAB
FOR PRESTRESSED CONCRETE
BOX BEAM UNIT
(SUB-REGIONAL TIER)
90° SKEW

ASSEMBLED BY : D.A. DAVENPORT	DATE : 5/5/16
CHECKED BY : K.P. SEDAI	DATE : 5/13/16
DRAWN BY : MAA 11/11	REV. 9-15 MAA/TMG
CHECKED BY : AAC 11/11	

05-AUG-2016 09:34
R:\Structures\Plans\B5749_SMU_AS.dgn
hbdesai

DOCUMENT NOT CONSIDERED FINAL UNLESS ALL SIGNATURES COMPLETED

REVISIONS						SHEET NO.
NO.	BY:	DATE:	NO.	BY:	DATE:	S-16
1			3			TOTAL SHEETS
2			4			16

STD. NO. BAS_BB_33_90S

STANDARD NOTES

DESIGN DATA:

SPECIFICATIONS	A.A.S.H.T.O. (CURRENT)
LIVE LOAD	SEE PLANS
IMPACT ALLOWANCE	SEE A.A.S.H.T.O.
STRESS IN EXTREME FIBER OF	
STRUCTURAL STEEL - AASHTO M270 GRADE 36	20,000 LBS. PER SQ. IN.
- AASHTO M270 GRADE 50W	27,000 LBS. PER SQ. IN.
- AASHTO M270 GRADE 50	27,000 LBS. PER SQ. IN.
REINFORCING STEEL IN TENSION	
GRADE 60	24,000 LBS. PER SQ. IN.
CONCRETE IN COMPRESSION	1,200 LBS. PER SQ. IN.
CONCRETE IN SHEAR	SEE A.A.S.H.T.O.
STRUCTURAL TIMBER - TREATED OR	
UNTREATED - EXTREME FIBER STRESS	1,800 LBS. PER SQ. IN.
COMPRESSION PERPENDICULAR TO GRAIN OF TIMBER	375 LBS. PER SQ. IN.
EQUIVALENT FLUID PRESSURE OF EARTH	30 LBS. PER CU. FT. (MINIMUM)

MATERIAL AND WORKMANSHIP:

EXCEPT AS MAY OTHERWISE BE SPECIFIED ON PLANS OR IN THE SPECIAL PROVISIONS, ALL MATERIAL AND WORKMANSHIP SHALL BE IN ACCORDANCE WITH THE 2012 "STANDARD SPECIFICATIONS FOR ROADS AND STRUCTURES" OF THE N. C. DEPARTMENT OF TRANSPORTATION.

STEEL SHEET PILING FOR PERMANENT OR TEMPORARY APPLICATIONS SHALL BE HOT ROLLED.

CONCRETE:

UNLESS OTHERWISE REQUIRED ON PLANS, CLASS A CONCRETE SHALL BE USED FOR ALL PORTIONS OF ALL STRUCTURES WITH THE EXCEPTION THAT: CLASS AA CONCRETE SHALL BE USED IN BRIDGE SUPERSTRUCTURES, ABUTMENT BACKWALLS, AND APPROACH SLABS; AND CLASS B CONCRETE SHALL BE USED FOR SLOPE PROTECTION AND RIP RAP.

CONCRETE CHAMFERS:

UNLESS OTHERWISE NOTED ON THE PLANS, ALL EXPOSED CORNERS ON STRUCTURES SHALL BE CHAMFERED 3/4" WITH THE FOLLOWING EXCEPTIONS: TOP CORNERS OF CURBS MAY BE ROUNDED TO 1-1/2" RADIUS WHICH IS BUILT INTO CURB FORMS; CORNERS OF TRANSVERSE FLOOR EXPANSION JOINTS SHALL BE ROUNDED WITH A 1/4" FINISHING TOOL UNLESS OTHERWISE REQUIRED ON PLANS; AND CORNERS OF EXPANSION JOINTS IN THE ROADWAY FACES AND TOPS OF CURBS AND SIDEWALKS SHALL BE ROUNDED TO A 1/4" RADIUS WITH A FINISHING STONE OR TOOL UNLESS OTHERWISE REQUIRED ON PLANS.

DOWELS:

DOWELS WHEN INDICATED ON PLANS AS FOR CULVERT EXTENSIONS, SHALL BE EMBEDDED AT LEAST 12" INTO THE OLD CONCRETE AND GROUTED INTO PLACE WITH 1:2 CEMENT MORTAR.

ALLOWANCE FOR DEAD LOAD DEFLECTION, SETTLEMENT, ETC. IN CASTING SUPERSTRUCTURES:

BRIDGES SHALL BE BUILT ON THE GRADE OR VERTICAL CURVE SHOWN ON PLANS. SLABS, CURBS AND PARAPETS SHALL CONFORM TO THE GRADE OR CURVE.

ALL DIMENSIONS WHICH ARE GIVEN IN SECTION AND ARE AFFECTED BY DEAD LOAD DEFLECTIONS ARE DIMENSIONS AT CENTER LINE OF BEARING UNLESS OTHERWISE NOTED ON PLANS. IN SETTING FORMS FOR STEEL BEAM BRIDGES AND PRESTRESSED CONCRETE GIRDER BRIDGES, ADJUSTMENTS SHALL BE MADE DUE TO THE DEAD LOAD DEFLECTIONS FOR THE ELEVATIONS SHOWN. WHERE BLOCKS ARE SHOWN OVER BEAMS FOR BUILDING UP TO THE SLAB, THE VERTICAL DIMENSIONS OF THE BLOCKS SHALL BE ADJUSTED BETWEEN BEARINGS TO COMPENSATE FOR DEAD LOAD DEFLECTIONS, VERTICAL CURVE ORDINATE, AND ACTUAL BEAM CAMBER. WHERE BOTTOM OF SLAB IS IN LINE WITH BOTTOM OF TOP FLANGES, DEPTH OF SLAB BETWEEN BEARINGS SHALL BE ADJUSTED TO COMPENSATE FOR DEAD LOAD DEFLECTION, VERTICAL CURVE ORDINATE, AND ACTUAL BEAM CAMBER.

IN SETTING FALSEWORK AND FORMS FOR REINFORCED CONCRETE SPANS, AN ALLOWANCE SHALL BE MADE FOR DEAD LOAD DEFLECTIONS, SETTLEMENT OF FALSEWORK, AND PERMANENT CAMBER WHICH SHALL BE PROVIDED FOR IN ADDITION TO THE ELEVATIONS SHOWN. AFTER REMOVAL OF THE FALSEWORK, THE FINISHED STRUCTURES SHALL CONFORM TO THE PROFILE AND ELEVATIONS SHOWN ON THE PLANS AND CONSTRUCTION ELEVATIONS FURNISHED BY THE ENGINEER.

DETAILED DRAWINGS FOR FALSEWORK OR FORMS FOR BRIDGE SUPERSTRUCTURE AND ANY STRUCTURE OR PARTS OF A STRUCTURE AS NOTED ON THE PLANS SHALL BE SUBMITTED TO THE ENGINEER FOR APPROVAL BEFORE CONSTRUCTION OF THE FALSEWORK OR FORMS IS STARTED.

REINFORCING STEEL:

ALL REINFORCING STEEL SHALL BE DEFORMED. DIMENSIONS RELATIVE TO PLACEMENT OF REINFORCING ARE TO CENTERS OF BARS UNLESS OTHERWISE INDICATED IN THE PLANS. DIMENSIONS ON BAR DETAILS ARE TO CENTERS OF BARS OR ARE OUT TO OUT AS INDICATED ON PLANS.

WIRE BAR SUPPORTS SHALL BE PROVIDED FOR REINFORCING STEEL WHERE INDICATED ON THE PLANS. WHEN BAR SUPPORT PIECES ARE PLACED IN CONTINUOUS LINES, THEY SHALL BE SO PLACED THAT THE ENDS OF THE SUPPORTING WIRES SHALL BE LAPPED TO LOCK LEGS ON ADJOINING PIECES.

STRUCTURAL STEEL:

AT THE CONTRACTOR'S OPTION, HE MAY SUBSTITUTE 7/8" Ø SHEAR STUDS FOR THE ¾" Ø STUDS SPECIFIED ON THE PLANS. THIS SUBSTITUTION SHALL BE MADE AT THE RATE OF 3 - 7/8" Ø STUDS FOR 4 - 3/4" Ø STUDS, AND STUD SPACING CHANGES SHALL BE MADE AS NECESSARY TO PROVIDE THE SAME EQUIVALENT NUMBER OF 7/8" Ø STUDS ALONG THE BEAM AS SHOWN FOR 3/4" Ø STUDS BASED ON THE RATIO OF 3 - 7/8" Ø STUDS FOR 4 - 3/4" Ø STUDS. STUDS OF THE LENGTH SPECIFIED ON THE PLANS MUST BE PROVIDED. THE MAXIMUM SPACING SHALL BE 2'-0".

EXCEPT AT THE INTERIOR SUPPORTS OF CONTINUOUS BEAMS WHERE THE COVER PLATE IS IN CONTACT WITH BEARING PLATE, THE CONTRACTOR MAY, AT HIS OPTION, SUBSTITUTE FOR THE COVER PLATES DESIGNATED ON THE PLANS COVER PLATES OF THE EQUIVALENT AREA PROVIDED THESE PLATES ARE AT LEAST 5/16" IN THICKNESS AND DO NOT EXCEED A WIDTH EQUAL TO THE FLANGE WIDTH LESS 2" OR A THICKNESS EQUAL TO 2 TIMES THE FLANGE THICKNESS. THE SIZE OF FILLET WELDS SHALL CONFORM TO THE REQUIREMENTS OF THE CURRENT ANSI/AASHTO/AWS "BRIDGE WELDING CODE". ELECTROSLAG WELDING WILL NOT BE PERMITTED.

WITH THE SOLE EXCEPTION OF EDGES AT SURFACES WHICH BEAR ON OTHER SURFACES, ALL SHARP EDGES AND ENDS OF SHAPES AND PLATES SHALL BE SLIGHTLY ROUNDED BY SUITABLE MEANS TO A RADIUS OF APPROXIMATELY 1/16 INCH OR EQUIVALENT FLAT SURFACE AT A SUITABLE ANGLE PRIOR TO PAINTING, GALVANIZING, OR METALLIZING.

HANDRAILS AND POSTS:

METAL STANDARDS AND FACES OF THE CONCRETE END POSTS FOR THE METAL RAIL SHALL BE SET NORMAL TO THE GRADE OF THE CURB, UNLESS OTHERWISE SHOWN ON PLANS. THE METAL RAIL AND TOPS OF CONCRETE POSTS USED WITH THE ALUMINUM RAIL SHALL BE BUILT PARALLEL TO THE GRADE OF THE CURB.

METAL HANDRAILS SHALL BE IN ACCORDANCE WITH THE PLANS. RAILS SHALL BE AS MANUFACTURED FOR BRIDGE RAILING. CASTINGS SHALL BE OF A UNIFORM APPEARANCE. FINS AND OTHER DEFORMATIONS RESULTING FROM CASTING OR OTHERWISE SHALL BE REMOVED IN A MANNER SO THAT A UNIFORM COLORING OF THE COMPLETED CASTING SHALL BE OBTAINED. CASTINGS WITH DISCOLORATIONS OR OF NON-UNIFORM COLORING WILL NOT BE ACCEPTED. CERTIFIED MILL REPORTS ARE REQUIRED FOR METAL RAILS AND POSTS.

SPECIAL NOTES:

GENERALLY, IN CASE OF DISCREPANCY, THIS STANDARD SHEET OF NOTES SHALL GOVERN OVER THE SPECIFICATIONS, BUT THE REMAINDER OF THE PLANS SHALL GOVERN OVER NOTES HEREON, AND SPECIAL PROVISIONS SHALL GOVERN OVER ALL. SEE SPECIFICATIONS ARTICLE 105-4.

ENGLISH

JANUARY, 1990