DocuSign Envelope ID: 8F156CA5-0327-4650-A437-27EDB0421585

09/08/99

PROJECT: 17BP.8.R.132

CONTRACT:

See Sheet 1A For Index of Sheets

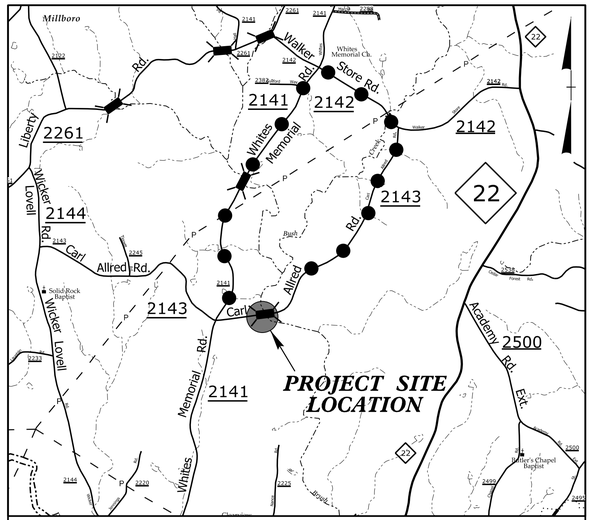

VICINITY MAP

OFF-SITE DETOUR ROUTE

N.T.S.

STATE OF NORTH CAROLINA
DIVISION OF HIGHWAYS

RANDOLPH COUNTY

LOCATION: BRIDGE 352 OVER BUSH CREEK ON SR 2143 (CARL ALLRED ROAD)

TYPE OF WORK: GRADING, DRAINAGE, PAVING & STRUCTURE

STATE	STATE PROJECT REFERENCE NO.	SHEET NO.	TOTAL SHEETS
N.C.	17BP.8.R.132	1	

STATE PROJ. NO.	F.A. PROJ. NO.	DESCRIPTION
17BP.8.R.132		P.E.

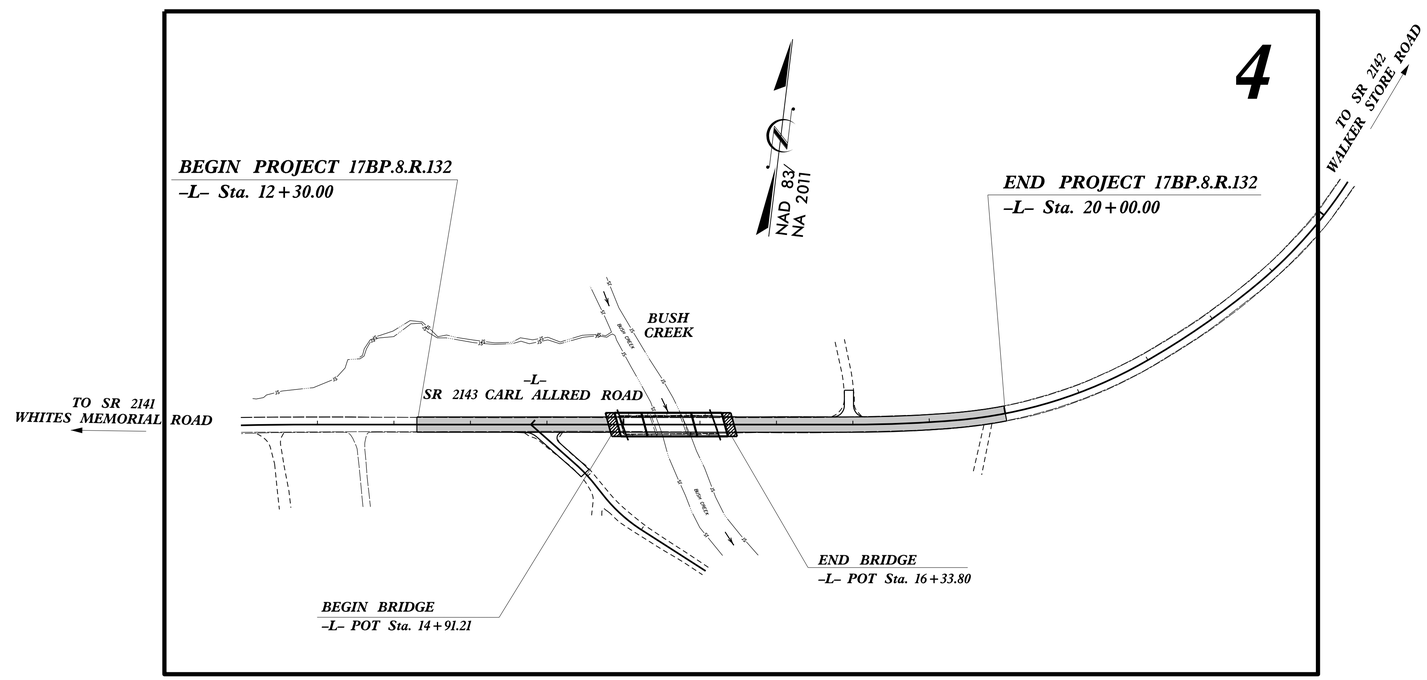

DOCUMENT NOT CONSIDERED FINAL UNLESS ALL SIGNATURES COMPLETED

GRAPHIC SCALES

50 25 0 50 100
PLANS

50 25 0 50 100
PROFILE (HORIZONTAL)

10 5 0 10 20
PROFILE (VERTICAL)

DESIGN DATA

ADT 2015 = 350
ADT 2025 = 700
K = %
D = %
T = 6 % *
V = 50 MPH
* TTST = DUAL
FUNC CLASS = LOCAL
SUBREGIONAL TIER

PROJECT LENGTH

LENGTH ROADWAY PROJECT 17BP.8.R.132	=	0.119 mi
LENGTH STRUCTURE PROJECT 17BP.8.R.132	=	0.027 mi
TOTAL LENGTH OF PROJECT 17BP.8.R.132	=	0.146 mi

PLANS PREPARED BY:

CH ENGINEERING
3220 GLEN ROYAL RD, RALEIGH, NC 27617
TELE 919.788.0224 FAX 919.788.0232
NC LICENSE #P-0189

2018 STANDARD SPECIFICATIONS

RIGHT OF WAY DATE:
MARCH 14, 2019

LETTING DATE:

PLANS PREPARED FOR:

DIVISION OF HIGHWAYS
DIVISION 8
121 DOT Drive
Carthage, NC 28327

BRIAN A. WILES, PE
PROJECT ENGINEER

TIM WELCH, PE
NCDOT CONTACT
DIV 8 BRIDGE PROGRAM MANAGER

HYDRAULICS ENGINEER

Kimley»Horn
421 FAYETTEVILLE STREET, SUITE 600
RALEIGH, N.C. 27601

DocuSigned by:
Larry D. Robinson
2/12/2020
P.E.
SIGNATURE:

NORTH CAROLINA PROFESSIONAL SEAL 026480 ENGINEER LARRY D. ROBINSON, JR.

ROADWAY DESIGN ENGINEER

DocuSigned by:
Brian A Wiles
2/12/2020
P.E.
SIGNATURE:

NORTH CAROLINA PROFESSIONAL SEAL 16689 ENGINEER BRIAN ALLEN WILES

STATE OF NORTH CAROLINA DEPARTMENT OF TRANSPORTATION

10/28/2019
R:\Roadway\Proj\Rand352_Rdy_tsh.dgn
USERNAME

DocuSign Envelope ID: FB97971B-4568-44A4-A846-C6EEE7816DD5

8/17/99

PROJECT REFERENCE NO.	SHEET NO.
17BP.8.R.132	1A

CH ENGINEERING
3220 GLEN ROYAL RD. RALEIGH, NC 27617
TELE 919.788.0224 FAX 919.788.0232
NC LICENSE #P-0189

ROADWAY DESIGN ENGINEER
DocuSigned by: Brian Allen Wiles
NORTH CAROLINA PROFESSIONAL SEAL 16689 ENGINEER BRIAN ALLEN WILES
2/12/2020

DOCUMENT NOT CONSIDERED FINAL UNLESS ALL SIGNATURES COMPLETED

INDEX OF SHEETS

SHEET NUMBER	SHEET
1	TITLE SHEET
1A	INDEX OF SHEETS, GENERAL NOTES AND STANDARD DRAWINGS
1B	CONVENTIONAL SYMBOLS
2A-1	PAVEMENT SCHEDULE, TYPICAL SECTIONS No. 1 THRU 3, INCIDENTAL MILLING AND WEDGING DETAILS
2A-2	TYPICAL SECTION No. 4 AND PAVED SHOULDER DETAILS
2D-1	DRAINAGE DITCH DETAIL
2C-1	GUARDRAIL INSTALLATION - SHEET 6 OF 8
2C-2	DETAIL OF STRUCTURE ANCHOR UNIT, TYPE III
3B-1	SUMMARIES OF EARTHWORK, GUARDRAIL, ASPHALT PAVEMENT REMOVAL AND SHOULDER BERM GUTTER
3D-1	LIST OF PIPES, ENDWALLS, ETC. (for PIPES 48" & UNDER)
4	PLAN SHEET
5	PROFILE SHEET
RW-01 THRU RW-04	RIGHT OF WAY SHEETS
TMP-1 THRU TMP-4	TRAFFIC MANAGEMENT PLANS
EC-1 THRU EC-5	EROSION CONTROL PLANS
UO-1 THRU UO-2	UTILITIES BY OTHERS PLANS
X-1 THRU X-20	CROSS-SECTIONS
S-1 THRU S-24	STRUCTURE PLANS

GENERAL NOTES:

2018 SPECIFICATIONS
EFFECTIVE: 01-16-2018
REVISED:

GRADE LINE:
GRADING AND SURFACING:

THE GRADE LINES SHOWN DENOTE THE FINISHED ELEVATION OF THE PROPOSED SURFACING AT GRADE POINTS SHOWN ON THE TYPICAL SECTIONS. GRADE LINES MAY BE ADJUSTED AT THEIR BEGINNING AND ENDING AND AT STRUCTURES AS DIRECTED BY THE ENGINEER IN ORDER TO SECURE A PROPER TIE-IN.

CLEARING:

CLEARING ON THIS PROJECT SHALL BE PERFORMED TO THE LIMITS ESTABLISHED BY METHOD III.

SUPERELEVATION:

ALL CURVES ON THIS PROJECT SHALL BE SUPERELEVATED IN ACCORDANCE WITH STD. NO. 225.04 USING THE RATE OF SUPERELEVATION AND RUNOFF SHOWN ON THE PLANS. SUPERELEVATION IS TO BE REVOLVED ABOUT THE GRADE POINTS SHOWN ON THE TYPICAL SECTIONS.

SHOULDER CONSTRUCTION:

ASPHALT, EARTH, AND CONCRETE SHOULDER CONSTRUCTION ON THE HIGH SIDE OF SUPERELEVATED CURVES SHALL BE IN ACCORDANCE WITH STD. NO. 560.01

SIDE ROADS:

THE CONTRACTOR WILL BE REQUIRED TO DO ALL NECESSARY WORK TO PROVIDE SUITABLE CONNECTIONS WITH ALL ROADS, STREETS, AND DRIVES ENTERING THIS PROJECT. THIS WORK WILL BE PAID FOR AT THE CONTRACT UNIT PRICE FOR THE PARTICULAR ITEMS INVOLVED.

GUARDRAIL:

THE GUARDRAIL LOCATIONS SHOWN ON THE PLANS MAY BE ADJUSTED DURING CONSTRUCTION AS DIRECTED BY THE ENGINEER. THE CONTRACTOR SHOULD CONSULT WITH THE ENGINEER PRIOR TO ORDERING GUARDRAIL MATERIAL.

TEMPORARY SHORING:

SHORING REQUIRED FOR THE MAINTENANCE OF TRAFFIC WILL BE PAID FOR AS "EXTRA WORK" IN ACCORDANCE WITH SECTION 104-7.

END BENTS:

THE ENGINEER SHALL CHECK THE STRUCTURE END BENT PLANS, DETAILS, AND CROSS-SECTION PRIOR TO SETTING OF THE SLOPE STAKES FOR THE EMBANKMENT OR EXCAVATION APPROACHING A BRIDGE.

UTILITIES:

UTILITY OWNERS ON THIS PROJECT ARE Randolph EMC - Power, CenturyLink - Communications and Spectrum - Communications.

ANY RELOCATION OF EXISTING UTILITIES WILL BE ACCOMPLISHED BY OTHERS.

RIGHT-OF-WAY MARKERS:

ALL RIGHT-OF-WAY MARKERS ON THIS PROJECT SHALL BE PLACED BY CONTRACT.

EFF. 01-16-2018
REV.

2018 ROADWAY ENGLISH STANDARD DRAWINGS

The following Roadway Standards as appear in "Roadway Standard Drawings" Highway Design Branch - N. C. Department of Transportation - Raleigh, N. C., Dated January, 2018 are applicable to this project and by reference hereby are considered a part of these plans:

STD.NO.	TITLE
DIVISION 2 - EARTHWORK	
200.03	Method of Clearing - Method III
225.02	Guide for Grading Subgrade - Secondary and Local
225.04	Method of Obtaining Superelevation - Two Lane Pavement
DIVISION 3 - PIPE CULVERTS	
300.01	Method of Pipe Installation
310.10	Driveway Pipe Construction
DIVISION 4 - MAJOR STRUCTURES	
422.02	Bridge Approach Fills - Type II Modified Approach Fill
DIVISION 5 - SUBGRADE, BASES AND SHOULDERS	
560.01	Method of Shoulder Construction - High Side of Superelevated Curve - Method I
DIVISION 6 - ASPHALT BASES AND PAVEMENTS	
654.01	Pavement Repairs
DIVISION 8 - INCIDENTALS	
806.01	Concrete Right-of-Way Marker
806.02	Granite Right-of-Way Marker
840.00	Concrete Base Pad for Drainage Structures
840.25	Anchorage for Frames - Brick or Concrete or Precast
840.29	Frames and Narrow Slot Flat Grates
840.35	Traffic Bearing Grated Drop Inlet - for Cast Iron Double Frame and Grates
840.46	Traffic Bearing Precast Drainage Structure
840.66	Drainage Structure Steps
846.01	Concrete Curb, Gutter and Curb & Gutter
862.01	Guardrail Placement
862.02	Guardrail Installation
862.03	Structure Anchor Units
876.02	Guide for Rip Rap at Pipe Outlets
876.04	Drainage Ditches with Class 'B' Rip Rap

10/28/2019
R:\Roadway\Proj\Rand352_Rdy_tsh_01A.dgn
TLEWARD

12/2/2016

PROJECT REFERENCE NO.	SHEET NO.
17BP.8.R.32	1B

STATE OF NORTH CAROLINA, DIVISION OF HIGHWAYS

CONVENTIONAL PLAN SHEET SYMBOLS

Note: Not to Scale

***S.U.E. = Subsurface Utility Engineering**

BOUNDARIES AND PROPERTY:

- State Line
- County Line
- Township Line
- City Line
- Reservation Line
- Property Line
- Existing Iron Pin — EIP
- Computed Property Corner
- Property Monument — ECM
- Parcel/Sequence Number — 123
- Existing Fence Line
- Proposed Woven Wire Fence
- Proposed Chain Link Fence
- Proposed Barbed Wire Fence
- Existing Wetland Boundary — WLB
- Proposed Wetland Boundary — WLB
- Existing Endangered Animal Boundary — EAB
- Existing Endangered Plant Boundary — EPB
- Existing Historic Property Boundary — HPB
- Known Contamination Area: Soil — S
- Potential Contamination Area: Soil — S
- Known Contamination Area: Water — W
- Potential Contamination Area: Water — W
- Contaminated Site: Known or Potential

BUILDINGS AND OTHER CULTURE:

- Gas Pump Vent or U/G Tank Cap
- Sign — S
- Well — W
- Small Mine
- Foundation
- Area Outline
- Cemetery
- Building
- School
- Church
- Dam

HYDROLOGY:

- Stream or Body of Water
- Hydro, Pool or Reservoir
- Jurisdictional Stream — JS
- Buffer Zone 1 — BZ 1
- Buffer Zone 2 — BZ 2
- Flow Arrow
- Disappearing Stream
- Spring
- Wetland
- Proposed Lateral, Tail, Head Ditch — FLOW
- False Sump

RAILROADS:

- Standard Gauge — CSX TRANSPORTATION
- RR Signal Milepost — MILEPOST 35
- Switch — SWITCH
- RR Abandoned
- RR Dismantled

RIGHT OF WAY & PROJECT CONTROL:

- Secondary Horiz and Vert Control Point
- Primary Horiz Control Point
- Primary Horiz and Vert Control Point
- Exist Permanent Easment Pin and Cap
- New Permanent Easement Pin and Cap
- Vertical Benchmark
- Existing Right of Way Marker
- Existing Right of Way Line
- New Right of Way Line — RW
- New Right of Way Line with Pin and Cap — RW
- New Right of Way Line with Concrete or Granite R/W Marker — RW
- New Control of Access Line with Concrete C/A Marker — CA
- Existing Control of Access — CA
- New Control of Access — CA
- Existing Easement Line — E
- New Temporary Construction Easement — E
- New Temporary Drainage Easement — TDE
- New Permanent Drainage Easement — PDE
- New Permanent Drainage / Utility Easement — DUE
- New Permanent Utility Easement — PUE
- New Temporary Utility Easement — TUE
- New Aerial Utility Easement — AUE

ROADS AND RELATED FEATURES:

- Existing Edge of Pavement
- Existing Curb
- Proposed Slope Stakes Cut — C
- Proposed Slope Stakes Fill — F
- Proposed Curb Ramp — CR
- Existing Metal Guardrail
- Proposed Guardrail
- Existing Cable Guiderail
- Proposed Cable Guiderail
- Equality Symbol
- Pavement Removal

VEGETATION:

- Single Tree
- Single Shrub
- Hedge
- Woods Line
- Orchard
- Vineyard — Vineyard

EXISTING STRUCTURES:

MAJOR:

- Bridge, Tunnel or Box Culvert — CONC
- Bridge Wing Wall, Head Wall and End Wall — CONC WW

MINOR:

- Head and End Wall — CONC HW
- Pipe Culvert
- Footbridge
- Drainage Box: Catch Basin, DI or JB — CB
- Paved Ditch Gutter
- Storm Sewer Manhole — S
- Storm Sewer — S

UTILITIES:

POWER:

- Existing Power Pole
- Proposed Power Pole
- Existing Joint Use Pole
- Proposed Joint Use Pole
- Power Manhole — P
- Power Line Tower
- Power Transformer
- U/G Power Cable Hand Hole
- H-Frame Pole
- U/G Power Line LOS B (S.U.E.*) — P
- U/G Power Line LOS C (S.U.E.*) — P
- U/G Power Line LOS D (S.U.E.*) — P

TELEPHONE:

- Existing Telephone Pole
- Proposed Telephone Pole
- Telephone Manhole — T
- Telephone Pedestal — T
- Telephone Cell Tower
- U/G Telephone Cable Hand Hole
- U/G Telephone Cable LOS B (S.U.E.*) — T
- U/G Telephone Cable LOS C (S.U.E.*) — T
- U/G Telephone Cable LOS D (S.U.E.*) — T
- U/G Telephone Conduit LOS B (S.U.E.*) — TC
- U/G Telephone Conduit LOS C (S.U.E.*) — TC
- U/G Telephone Conduit LOS D (S.U.E.*) — TC
- U/G Fiber Optics Cable LOS B (S.U.E.*) — T FO
- U/G Fiber Optics Cable LOS C (S.U.E.*) — T FO
- U/G Fiber Optics Cable LOS D (S.U.E.*) — T FO

WATER:

- Water Manhole — W
- Water Meter
- Water Valve
- Water Hydrant
- U/G Water Line LOS B (S.U.E*) — W
- U/G Water Line LOS C (S.U.E*) — W
- U/G Water Line LOS D (S.U.E*) — W
- Above Ground Water Line — A/G Water

TV:

- TV Pedestal — C
- TV Tower
- U/G TV Cable Hand Hole — HH
- U/G TV Cable LOS B (S.U.E.*) — TV
- U/G TV Cable LOS C (S.U.E.*) — TV
- U/G TV Cable LOS D (S.U.E.*) — TV
- U/G Fiber Optic Cable LOS B (S.U.E.*) — TV FO
- U/G Fiber Optic Cable LOS C (S.U.E.*) — TV FO
- U/G Fiber Optic Cable LOS D (S.U.E.*) — TV FO

GAS:

- Gas Valve
- Gas Meter
- U/G Gas Line LOS B (S.U.E.*) — G
- U/G Gas Line LOS C (S.U.E.*) — G
- U/G Gas Line LOS D (S.U.E.*) — G
- Above Ground Gas Line — A/G Gas

SANITARY SEWER:

- Sanitary Sewer Manhole
- Sanitary Sewer Cleanout
- U/G Sanitary Sewer Line — SS
- Above Ground Sanitary Sewer — A/G Sanitary Sewer
- SS Forced Main Line LOS B (S.U.E.*) — FSS
- SS Forced Main Line LOS C (S.U.E.*) — FSS
- SS Forced Main Line LOS D (S.U.E.*) — FSS

MISCELLANEOUS:

- Utility Pole
- Utility Pole with Base
- Utility Located Object
- Utility Traffic Signal Box — S
- Utility Unknown U/G Line LOS B (S.U.E.*) — 2UTL
- U/G Tank; Water, Gas, Oil
- Underground Storage Tank, Approx. Loc. — UST
- A/G Tank; Water, Gas, Oil
- Geoenvironmental Boring
- U/G Test Hole LOS A (S.U.E.*)
- Abandoned According to Utility Records — AATUR
- End of Information — E.O.I.

DocuSign Envelope ID: FB97971B-4568-44A4-A846-C6EEE7816DD5

6/2/99

PAVEMENT SCHEDULE

C1	PROP. APPROX. 1½" ASPHALT CONCRETE SURFACE COURSE, TYPE S9.5B, AT AN AVERAGE RATE OF 165 LBS. PER SQ. YD.
C2	PROP. APPROX. 3" ASPHALT CONCRETE SURFACE COURSE, TYPE S9.5B, AT AN AVERAGE RATE OF 165 LBS. PER SQ. YD. IN EACH OF TWO LAYERS.
C3	PROP. VAR. DEPTH ASPHALT CONCRETE SURFACE COURSE, TYPE S9.5B, AT AN AVERAGE RATE OF 110 LBS. PER SQ. YD. PER 1" DEPTH. TO BE PLACED IN LAYERS NOT TO EXCEED 2" IN DEPTH.
D1	PROP. APPROX. 4" ASPHALT CONCRETE INTERMEDIATE COURSE, TYPE I19.0C, AT AN AVERAGE RATE OF 456 LBS. PER SQ. YD.
D2	PROP. VAR. DEPTH ASPHALT CONCRETE INTERMEDIATE COURSE, TYPE I19.0C, AT AN AVERAGE RATE OF 114 LBS. PER SQ. YD. PER 1" DEPTH, TO BE PLACED IN LAYERS NOT LESS THAN 2½" IN DEPTH OR GREATER THAN 4" IN DEPTH.
E1	PROP. APPROX. 4" ASPHALT CONCRETE BASE COURSE, TYPE B25.0C, AT AN AVERAGE RATE OF 456 LBS. PER SQ. YD.
E2	PROP. VAR. DEPTH ASPHALT CONCRETE BASE COURSE, TYPE B25.0C, AT AN AVERAGE RATE OF 114 LBS. PER SQ. YD. PER 1" DEPTH. TO BE PLACED IN LAYERS NOT LESS THAN 3" IN DEPTH OR GREATER THAN 5½" IN DEPTH.
J1	PROP. 6" AGGREGATE BASE COURSE.
T	EARTH MATERIAL.
U	EXISTING PAVEMENT.
W	VARIABLE DEPTH ASPHALT PAVEMENT (SEE STANDARD WEDGING DETAIL THIS SHEET)

NOTE: PAVEMENT EDGE SLOPES ARE 1:1 UNLESS SHOWN OTHERWISE.

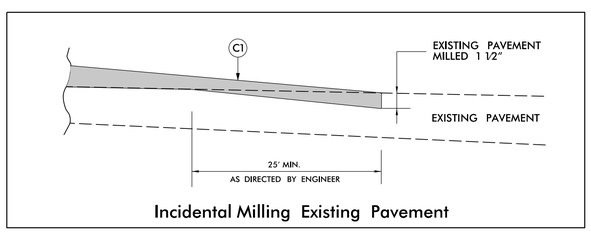

Incidental Milling Existing Pavement

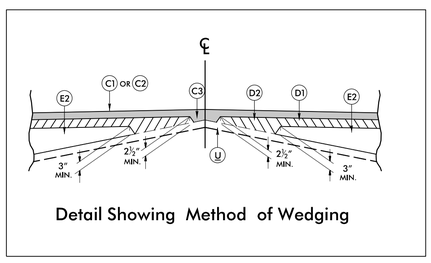

Detail Showing Method of Wedging

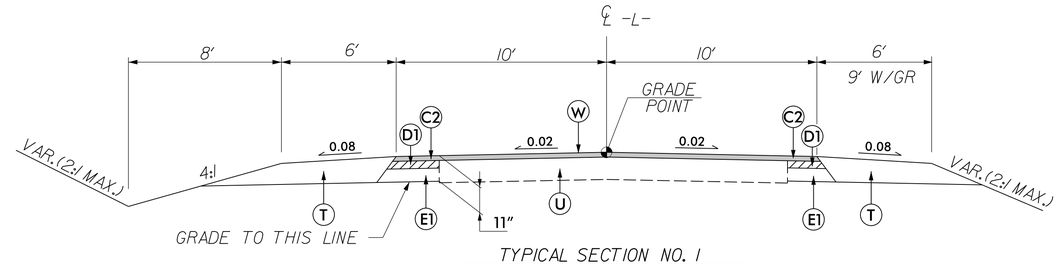

TYPICAL SECTION NO. 1

-L- STA 12+30.00 TO -L- STA 13+50.00
-L- STA 18+00.00 TO -L- STA 20+00.00

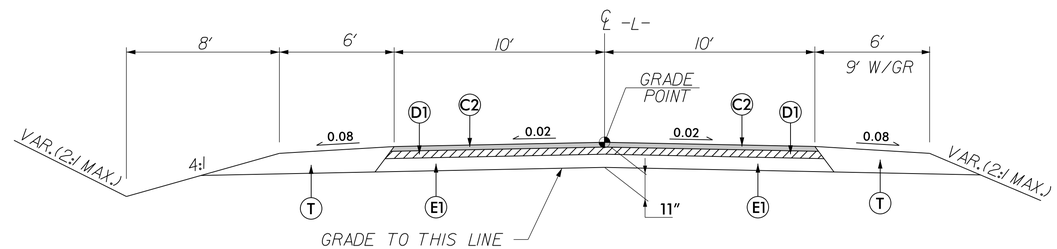

TYPICAL SECTION NO. 2

-L- STA 13+50.00 TO -L- STA 14+91.21 (BEGIN BRIDGE)
-L- STA 16+33.80 (END BRIDGE) TO -L- STA 18+00.00

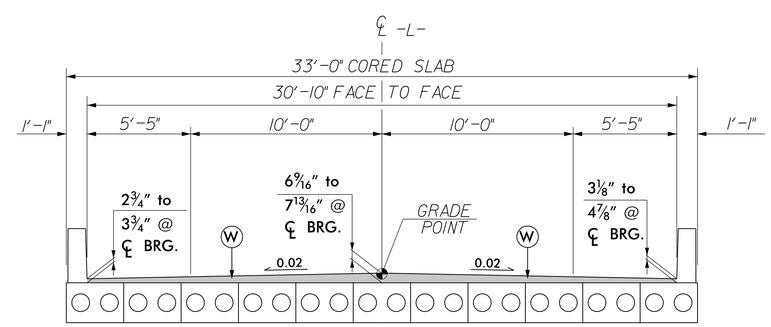

TYPICAL SECTION NO. 3

-L- STA 14+91.21 TO -L- STA 16+33.80

CH ENGINEERING
3220 GLEN ROYAL RD. RALEIGH, NC 27617
TELE 919.788.0224 FAX 919.788.0232
NC LICENSE #P-0189

PROJECT REFERENCE NO.	SHEET NO.
17BP.8.R.132	2A-1

ROADWAY DESIGN ENGINEER
DocuSigned by: Brian Wiles
NORTH CAROLINA PROFESSIONAL SEAL 16689 ENGINEER BRIAN ALLEN WILES
2/12/2020

PAVEMENT DESIGN ENGINEER

DOCUMENT NOT CONSIDERED FINAL UNLESS ALL SIGNATURES COMPLETED

10/28/2019
R:\Roadway\Proj\Rand352_Rdy_typ.dgn
USER:gmpt

DocuSign Envelope ID: FB97971B-4568-44A4-A846-C6EEE7816DD5

6/2/99

PAVEMENT SCHEDULE

C1	PROP. APPROX. 1½" ASPHALT CONCRETE SURFACE COURSE, TYPE S9.5B, AT AN AVERAGE RATE OF 165 LBS. PER SQ. YD.
C2	PROP. APPROX. 3" ASPHALT CONCRETE SURFACE COURSE, TYPE S9.5B, AT AN AVERAGE RATE OF 165 LBS. PER SQ. YD. IN EACH OF TWO LAYERS.
C3	PROP. VAR. DEPTH ASPHALT CONCRETE SURFACE COURSE, TYPE S9.5B, AT AN AVERAGE RATE OF 110 LBS. PER SQ. YD. PER 1" DEPTH. TO BE PLACED IN LAYERS NOT TO EXCEED 2" IN DEPTH.
D1	PROP. APPROX. 4" ASPHALT CONCRETE INTERMEDIATE COURSE, TYPE I19.0C, AT AN AVERAGE RATE OF 456 LBS. PER SQ. YD.
D2	PROP. VAR. DEPTH ASPHALT CONCRETE INTERMEDIATE COURSE, TYPE I19.0C, AT AN AVERAGE RATE OF 114 LBS. PER SQ. YD. PER 1" DEPTH, TO BE PLACED IN LAYERS NOT LESS THAN 2½" IN DEPTH OR GREATER THAN 4" IN DEPTH.
E1	PROP. APPROX. 4" ASPHALT CONCRETE BASE COURSE, TYPE B25.0C, AT AN AVERAGE RATE OF 456 LBS. PER SQ. YD.
E2	PROP. VAR. DEPTH ASPHALT CONCRETE BASE COURSE, TYPE B25.0C, AT AN AVERAGE RATE OF 114 LBS. PER SQ. YD. PER 1" DEPTH. TO BE PLACED IN LAYERS NOT LESS THAN 3" IN DEPTH OR GREATER THAN 5½" IN DEPTH.
J1	PROP. 6" AGGREGATE BASE COURSE.
T	EARTH MATERIAL.
U	EXISTING PAVEMENT.
W	VARIABLE DEPTH ASPHALT PAVEMENT (SEE STANDARD WEDGING DETAIL THIS SHEET)

NOTE: PAVEMENT EDGE SLOPES ARE 1:1 UNLESS SHOWN OTHERWISE.

CH ENGINEERING
3220 GLEN ROYAL RD. RALEIGH, NC 27617
TELE 919.788.0224 FAX 919.788.0232
NC LICENSE #P-0189

PROJECT REFERENCE NO.	SHEET NO.
17BP.8.R.132	2A-2

ROADWAY DESIGN ENGINEER
DocuSigned by: Brian Allen
B890C0B4F8C4F4...
NORTH CAROLINA PROFESSIONAL SEAL 16689 ENGINEER BRIAN ALLEN WILES
2/12/2020

PAVEMENT DESIGN ENGINEER

DOCUMENT NOT CONSIDERED FINAL UNLESS ALL SIGNATURES COMPLETED

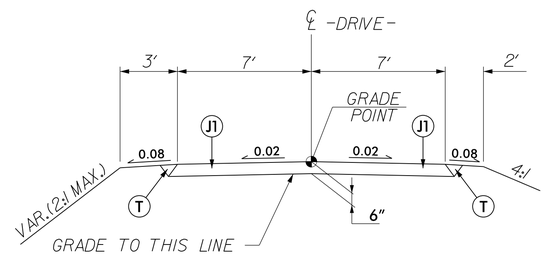

TYPICAL SECTION NO. 4

-DRIVE- STA 10+15.08 TO -DRIVE- STA 10+95.00

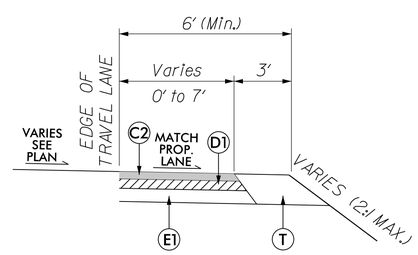

TYPICAL SECTION
FOR PAVED SHOULDER

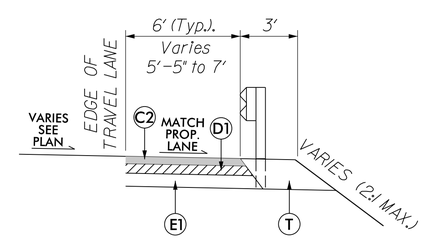

TYPICAL SECTION
FOR PAVED SHOULDER w/ GUARDRAIL

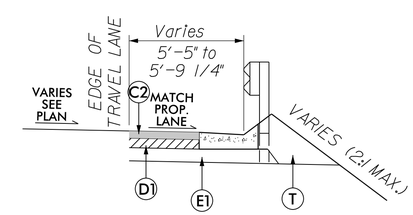

TYPICAL SECTION
FOR SHOULDER BERM GUTTER

10/28/2019
R:\Roadway\Proj\Rand352_Rdy_typ.dgn
USER: bwiles

DocuSign Envelope ID: D7CCE778-8C30-495C-A6EA-E1AC67A4770

14-DEC-2017 10:36
S:\Contracts\Contracts\Special Details\jhowerton\Standard Drawings\2018 Standard Drawings\Details in Lieu of Standards\Division 8\0862d0301.dgn
jhowerton AT CSD-292595

STATE OF NORTH CAROLINA
DEPT. OF TRANSPORTATION
DIVISION OF HIGHWAYS
RALEIGH, N.C.

ROADWAY DETAIL DRAWING FOR
STRUCTURE ANCHOR UNITS
GUARDRAIL ANCHOR UNIT, TYPE III
FOR ATTACHMENT TO RAIL ON BRIDGE

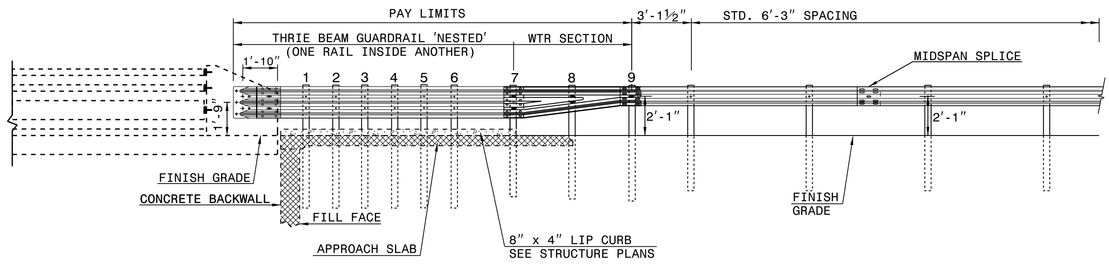

ELEVATION

NOTE:
**POST NOT REQUIRED FOR SKEW ANGLES GREATER THAN 150° OR LESS THAN 30° UNLESS OTHERWISE DIRECTED BY THE ENGINEER.
*THE DISTANCE FROM END OF BRIDGE RAIL TO CENTER LINE OF THE FIRST POST SHOULD BE 11½" IF CONCRETE BACKWALL IS NOT PRESENT.
-SHOULDER BERM GUTTER MUST BE INSTALLED TO THE LIMITS 8" x 4" LIP CURB IS SHOWN IF ANCHOR UNIT IS NOT ADJACENT TO AN APPROACH SLAB.
-MEASURE GUARDRAIL HEIGHT FROM THE TOP OF ADJACENT SURFACE (SHOULDER, BERM, OR GUTTER).
-LAP JOINTS IN THE DIRECTION OF TRAFFIC FLOW.
-SEE SHEET 3 FOR POST SECTIONS 1 THRU 9.

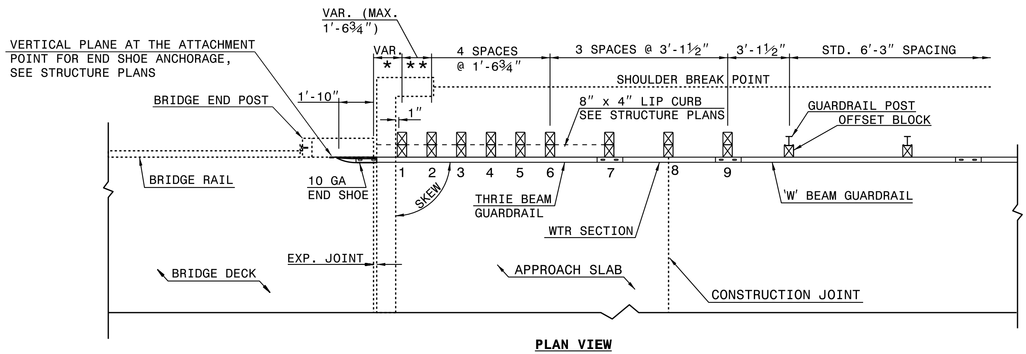

PLAN VIEW

GUARDRAIL ANCHOR UNIT, TYPE III FOR ATTACHMENT TO RAIL ON BRIDGE

SHEET 1 OF 7
862D03

STATE OF NORTH CAROLINA
DEPT. OF TRANSPORTATION
DIVISION OF HIGHWAYS
RALEIGH, N.C.

ROADWAY DETAIL DRAWING FOR
STRUCTURE ANCHOR UNITS
GUARDRAIL ANCHOR UNIT, TYPE III
FOR ATTACHMENT TO RAIL ON BRIDGE

SHEET 1 OF 7
862D03

STATE OF NORTH CAROLINA
DEPT. OF TRANSPORTATION
DIVISION OF HIGHWAYS
RALEIGH, N.C.

ROADWAY DETAIL DRAWING FOR
STRUCTURE ANCHOR UNITS
GUARDRAIL ANCHOR UNIT, TYPE III FOR ATTACHMENT TO
RAIL ON BRIDGE - SUB REGIONAL TIER

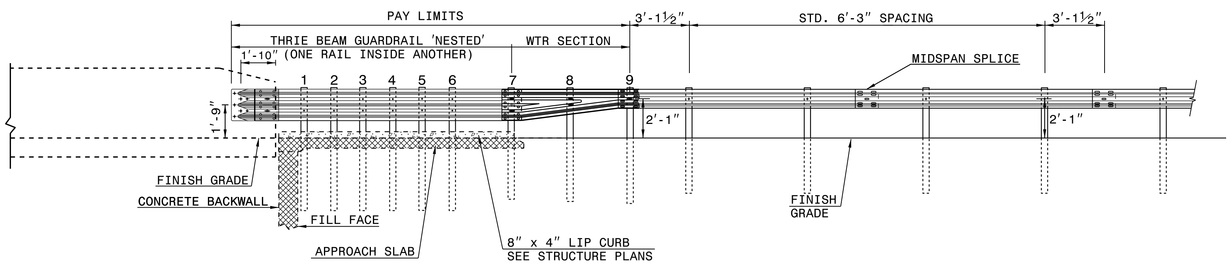

ELEVATION

NOTE:
**POST NOT REQUIRED FOR SKEW ANGLES GREATER THAN 150° OR LESS THAN 30° UNLESS OTHERWISE DIRECTED BY THE ENGINEER.
*THE DISTANCE FROM END OF BRIDGE RAIL TO CENTER LINE OF THE FIRST POST SHOULD BE 11½" IF CONCRETE BACKWALL IS NOT PRESENT.
-SHOULDER BERM GUTTER MUST BE INSTALLED TO THE LIMITS 8" x 4" LIP CURB IS SHOWN IF ANCHOR UNIT IS NOT ADJACENT TO AN APPROACH SLAB.
-MEASURE GUARDRAIL HEIGHT FROM THE TOP OF ADJACENT SURFACE (SHOULDER, BERM, OR GUTTER).
-LAP JOINTS IN THE DIRECTION OF TRAFFIC FLOW.
-SEE SHEET 3 FOR POST SECTIONS 1 THRU 9.

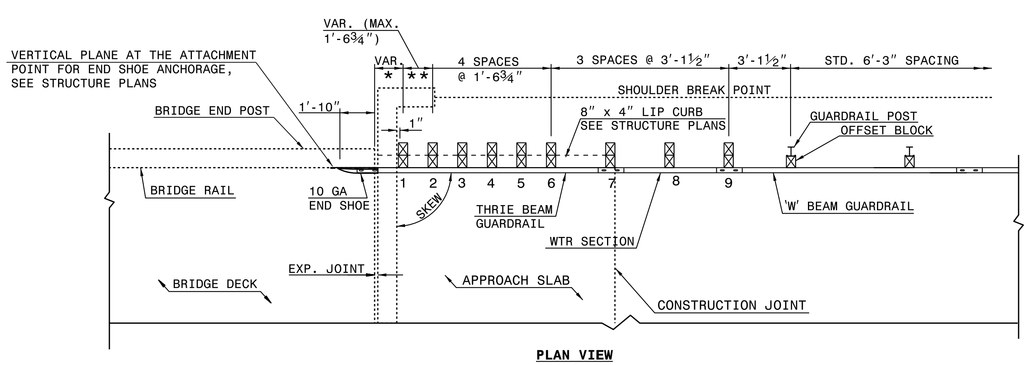

PLAN VIEW

GUARDRAIL ANCHOR UNIT, TYPE III FOR ATTACHMENT TO RAIL ON BRIDGE - SUB REGIONAL TIER

SHEET 2 OF 7
862D03

STATE OF NORTH CAROLINA
DEPT. OF TRANSPORTATION
DIVISION OF HIGHWAYS
RALEIGH, N.C.

ROADWAY DETAIL DRAWING FOR
STRUCTURE ANCHOR UNITS
GUARDRAIL ANCHOR UNIT, TYPE III FOR ATTACHMENT TO
RAIL ON BRIDGE - SUB REGIONAL TIER

SHEET 2 OF 7
862D03

SEE TITLE BLOCK

ORIGINAL BY: J. HOWERTON DATE: 06-22-12
MODIFIED BY: DATE:
CHECKED BY: DATE:
FILE SPEC.:

CONTRACT STANDARDS AND DEVELOPMENT UNIT
Office 919-707-6950 FAX 919-250-4119

DOCUMENT NOT CONSIDERED FINAL UNLESS ALL SIGNATURES COMPLETED

DocuSigned by:
Jennifer S. Howerton
2/12/2020

NORTH CAROLINA PROFESSIONAL SEAL 022966 ENGINEER

PROJECT REFERENCE NO. 17BP.8.R.132
SHEET NO. 2C-2

DocuSign Envelope ID: D7CCE77B-BC30-405C-A9EA-E14C67AF4770

PROJECT REFERENCE NO.	SHEET NO.
17BP.8.R.132	2C-1

DOCUMENT NOT CONSIDERED FINAL UNLESS ALL SIGNATURES COMPLETED

STATE OF NORTH CAROLINA
DEPT. OF TRANSPORTATION
DIVISION OF HIGHWAYS
RALEIGH, N.C.

ROADWAY DETAIL DRAWING FOR
GUARDRAIL INSTALLATION

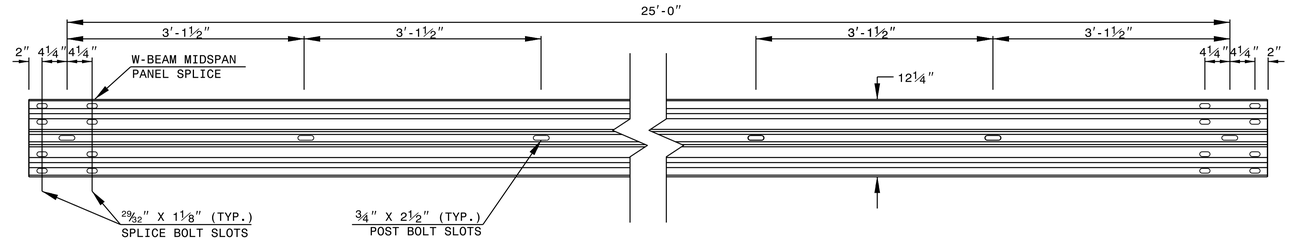

STANDARD W-BEAM GUARDRAIL

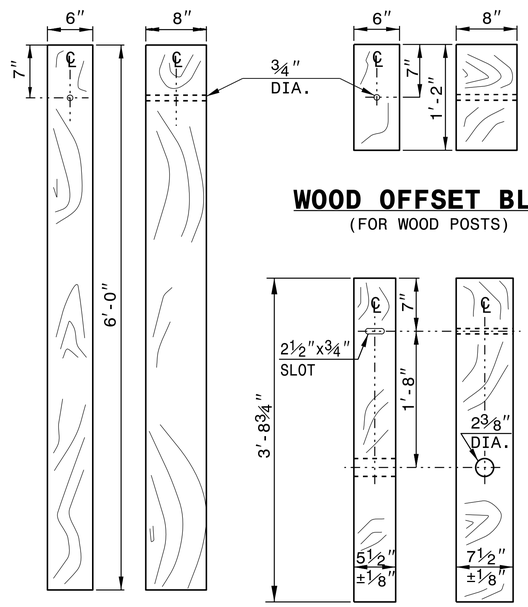

STANDARD LINE POST

WOOD OFFSET BLOCK
(FOR WOOD POSTS)

SHORT WOOD BREAKAWAY POST

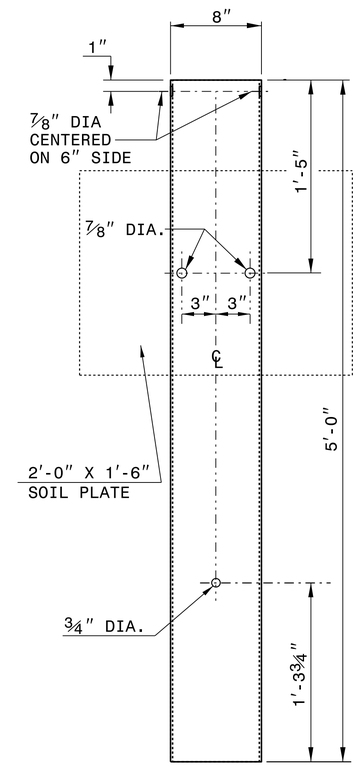

STEEL TUBE
TS 6"x8"x0.1875"

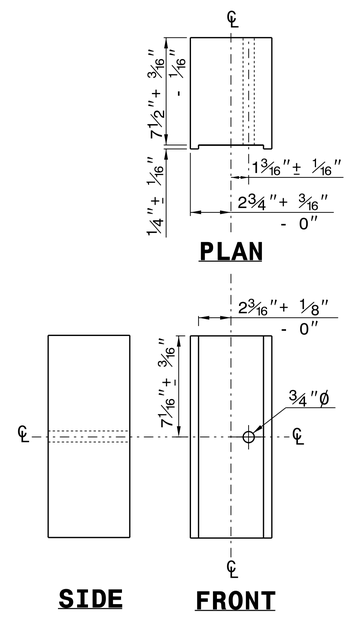

ROUTED OFFSET BLOCK

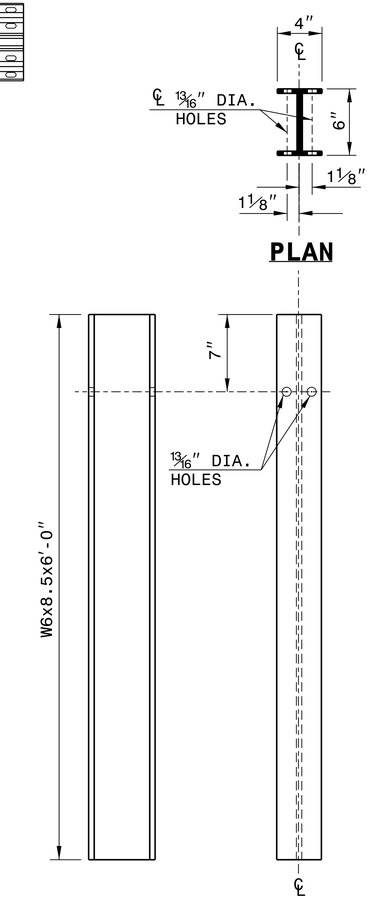

"W6" STEEL POST

SYSTEM PARTS

SHEET 6 OF 8
862D02

STATE OF NORTH CAROLINA
DEPT. OF TRANSPORTATION
DIVISION OF HIGHWAYS
RALEIGH, N.C.

ROADWAY DETAIL DRAWING FOR
GUARDRAIL INSTALLATION

SHEET 6 OF 8
862D02

DocuSigned by:
573F3D17E...

NORTH CAROLINA PROFESSIONAL SEAL 022966 ENGINEER JOEL S. HOWERTON

2/12/2020

CONTRACTS STANDARDS AND DEVELOPMENT UNIT
Office 919-707-6950 FAX 919-250-4119

SEE TITLE BLOCK

ORIGINAL BY: J.HOWERTON DATE: 3-7-2018
MODIFIED BY: DATE:
CHECKED BY: DATE:
FILE SPEC.:

DocuSign Envelope ID: 8F156CA5-0327-4650-A437-27EDB0421585

8/17/99

REVISIONS

Kimley»Horn ©2019
421 FAYETTEVILLE STREET, SUITE 600
RALEIGH, N.C. 27601

PROJECT REFERENCE NO.	SHEET NO.
17BP.8.R.132	2D-1

RANDOLPH COUNTY BRIDGE #352

ROADWAY DESIGN ENGINEER

HYDRAULICS ENGINEER
2/12/2020
NORTH CAROLINA PROFESSIONAL SEAL 026480 ENGINEER LARRY D. ROBINSON, JR.
DocuSigned by: Larry D. Robinson
4/13/2020

DOCUMENT NOT CONSIDERED FINAL UNLESS ALL SIGNATURES COMPLETED

DETAIL 1
TOE PROTECTION
(Not to Scale)

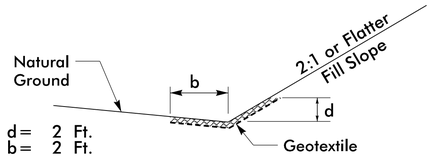

d = 2 Ft.
b = 2 Ft.

Type of Liner = Class B Rip–Rap

FROM STA. 12+75 TO 13+75 –L– (RT)
FROM STA. 10+34 TO 10+64 –DRIVE– (RT)

DETAIL 2
LATERAL 'V' DITCH
(Not to Scale)

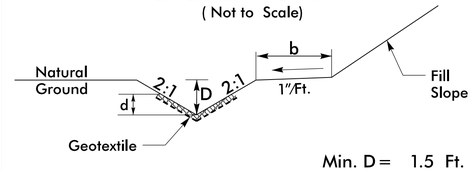

Min. D = 1.5 Ft.
Max. d = 1.5 Ft.
b = 5 Ft.

Type of Liner = Class I Rip–Rap

FROM STA. 14+50 TO STA. 15+00 –L– (RT)
FROM STA. 14+50 TO 14+75 –L– (LT)

DETAIL 3
SPECIAL LATERAL 'V' DITCH
(Not to Scale)

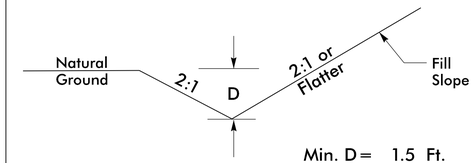

Min. D = 1.5 Ft.

FROM STA. 13+25 TO 14+25 –L– (LT)

DETAIL 4
STANDARD 'V' DITCH
(Not to Scale)

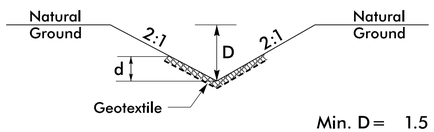

Min. D = 1.5 Ft.
Max. d = 1.5 Ft.

Type of Liner = Class I Rip–Rap

FROM STA. 15+00 TO STA. 15+70 –L– (RT)
FROM STA. 14+75 TO STA. 15+12 –L– (LT)

DETAIL 5
RIP RAP AT EMBANKMENT
(Not to Scale)

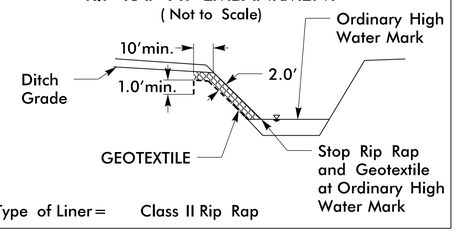

Type of Liner = Class II Rip Rap

FROM STA. 15+60 TO STA. 15+70 –L– (RT)
FROM STA. 15+02 TO STA 15+12 –L– (LT)

DETAIL 6
SPECIAL LATERAL 'V' DITCH
(Not to Scale)

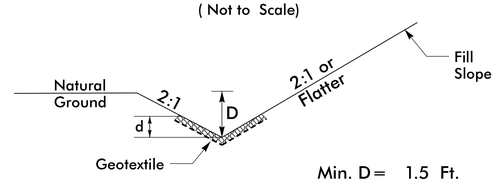

Min. D = 1.5 Ft.
Max. d = 1.5 Ft.

Type of Liner = Class I Rip–Rap

FROM STA. 14+25 TO 14+50 –L– (LT)

10/30/2019
R:\Projects\Randolph\Rand352_hyd_2D-1.dgn
TIMMONS

COMPUTED BY: _____ DATE: _____
CHECKED BY: _____ DATE: _____

STATE OF NORTH CAROLINA
DIVISION OF HIGHWAYS

PROJECT REFERENCE NO.	SHEET NO.
17BP.8.R.132	3B-1

SUMMARY OF EARTHWORK

IN CUBIC YARDS

STATION	STATION	UNCL. EXCAV.	EMBANK. +%	BORROW	WASTE
–L– 12+30	14+91.21	27	1,913	1,886	
	SUBTOTAL	27	1,913	1,886	
–L– 16+33.80	20+00	20	2,998	2,978	
–DRIVE– 10+00	10+95	0	118	118	
	SUBTOTAL	20	3,116	3,096	
TOTAL		47	5,029	4,982	
MATERIAL FOR SHOULDER CONSTRUCTION			179	179	
LOSS DUE TO CLEARING & GRUBBING					
WASTE IN LIEU OF BORROW					
PROJECT TOTAL		47	5,208	5,161	
EST. 5% TO REPLACE TOP SOIL ON BORROW PIT				258	
GRAND TOTALS:		47		5,419	
SAY:		50		5,500	

Earthwork quantities are calculated by the Roadway Design Unit. These earthwork quantities are based in part on subsurface data provided by the Geotechnical Engineering Unit.

Note: Approximate quantities only. Unclassified Excavation, Borrow Excavation, Fine Grading, Clearing and Grubbing and Removal of Asphalt Pavement will be paid for at the contract lump sum price for grading.

SUMMARY OF EXISTING ASPHALT PAVEMENT REMOVAL

SURVEY LINE	STATION	STATION	LOCATION LT/RT/CL	YD^2
L	13+50	14+97	CL	327
L	16+20	18+00	CL	400
			TOTAL:	727
			SAY:	730

SHOULDER BERM GUTTER SUMMARY

SURVEY LINE	STATION	STATION	LENGTH
L (LT SIDE)	14+60	14+76.37	16.37
L (RT SIDE)	14+60	14+84.63	24.63
		TOTAL:	41.00
		SAY:	45

"N" = DISTANCE FROM EDGE OF LANE TO FACE OF GUARDRAIL.
TOTAL SHOULDER WIDTH = DISTANCE FROM EDGE OF TRAVEL LANE TO SHOULDER BREAK POINT.
FLARE LENGTH = DISTANCE FROM LAST SECTION OF PARALLEL GUARDRAIL TO END OF GUARDRAIL.
W = TOTAL WIDTH OF FLARE FROM BEGINNING OF TAPER TO END OF GUARDRAIL.
G = GATING IMPACT ATTENUATOR TYPE 350
NG = NON–GATING IMPACT ATTENUATOR TYPE 350

GUARDRAIL SUMMARY

SURVEY LINE	BEG. STA.	END STA.	LOCATION	LENGTH			WARRANT POINT		"N" DIST. FROM E.O.L.	TOTAL SHOUL. WIDTH	FLARE LENGTH		W		ANCHORS								IMPACT ATTENUATOR TYPE 350			SINGLE FACED CONCRETE BARRIER	REMOVE EXISTING GUARDRAIL	REMOVE AND STOCKPILE EXISTING GUARDRAIL	REMARKS
				STRAIGHT	SHOP CURVED	DOUBLE FACED	APPROACH END	TRAILING END			APPROACH END	TRAILING END	APPROACH END	TRAILING END	XI MOD	GREU TL–2	GREU TL–3	M–350	TYPE III	CAT–1	VI MOD	BIC	AT–1	EA	G	NG				
L	13+69.62	14+88.37	LT	118.75				14+25	6	9		50		1			1		1											
L	14+21.63	14+96.63	RT	75.00			14+96.23		6	9	50		1				1		1											
L	16+23.37	17+67.12	LT	143.75			17+00		6	9	50		1				1		1											
L	16+31.63	19+50.38	RT	318.75				18+75	6	9		50		1			1		1											
		SUBTOTAL		656.25													4		4											
		LESS ANCHOR DEDUCTIONS																												
		GREU TL–3 4 @ 50'		–200.00																										
		TYPE III 4 @ 18.75'		–75.00																										
		TOTAL		381.25													4		4											
		SAY		387.50			5 ADDITIONAL GUARDRAIL POSTS										4		4											

COMPUTED BY: _____ DATE: _____
CHECKED BY: BAW DATE: _____

PROJECT REFERENCE NO.	SHEET NO.
17BP.8.R.132	3D-1

STATE OF NORTH CAROLINA
DIVISION OF HIGHWAYS

LIST OF PIPES, ENDWALLS, ETC. (FOR PIPES 48" & UNDER)

STATION / SIZE / THICKNESS OR GAUGE	LOCATION (LT,RT, OR CL)	STRUCTURE NO. FROM	STRUCTURE NO. TO	TOP ELEVATION	INVERT ELEVATION	INVERT ELEVATION	SLOPE CRITICAL	DRAINAGE PIPE (RCP, CSP, CAAP, HDPE, or PVC) 12"	15"	18"	24"	30"	36"	42"	48"	DO NOT USE RCP	DO NOT USE CSP	DO NOT USE CAAP	DO NOT USE HDPE	C.S. PIPE 12"	15"	18"	24"	30"	36"	42"	48"	.064	.064	.064	.064	.079	.079	.109	.109
14+67	LT	0403		584.2	581.4																														
		0403	0404		581.4	564.0			48							X	X	X																	
14+67	RT	0402		584.2	581.4																														
		0402	0401		581.4	574.0			28							X	X	X																	
14+12	RT	0404																																	
TOTALS									76																										

STATION / SIZE / THICKNESS OR GAUGE	R.C. PIPE CLASS III 12"	15"	18"	24"	30"	36"	42"	48"	R.C. PIPE CLASS IV 12"	15"	18"	24"	30"	36"	42"	48"	*** R.C. PIPE (CLASS V)	**** RC PIPE CULVERTS, CONTRACTOR DESIGN	15" SIDE DRAIN PIPE	18" SIDE DRAIN PIPE	ENDWALLS STD. 838.01, STD. 838.11 OR STD. 838.80 (UNLESS NOTED OTHERWISE) CU. YDS. R.C.P.	C.S.P.	QUANTITIES FOR DRAINAGE STRUCTURES * TOTAL L.F. FOR PAY QUANTITY SHALL BE COL. 'A' + (1.3 X COL.'B') PER EACH (0' THRU 5.0')	LIN. FT. A 5.0' THRU 10.0'	B 10.0' AND ABOVE	C.B. STD. 840.01 OR STD. 840.02	FRAME, GRATES AND HOOD STANDARD 840.03 TYPE OF GRATE E	F	G		CONCRETE TRANSITIONAL SECTION DROP INLET	CATCH BASIN				G.D.I. TYPE "B" STD. 840.18 OR 840.27	T.B.D.I. STD. 840.35	G.D.I. FRAME WITH TWO N.S. SAG GRATES STD. 840.24	G.D.I. FRAME WITH TWO N.S. FLAT GRATES STD. 840.29								CORR. STEEL ELBOWS NO. & SIZE	DRAINAGE PIPE ELBOWS NO. & SIZE	CONC. & BRICK PIPE PLUG, C.Y. STD. 840.71	CONC. COLLARS CL. "B" C.Y. STD 840.72	PIPE REMOVAL LIN.FT.	REMARKS
14+67																							1									1		1	
14+67																							1									1		1	
																																			2@15"
14+12											76																								
TOTALS											76												2									2		2	

ABBREVIATIONS	
C.B.	CATCH BASIN
N.D.I.	NARROW DROP INLET
D.I.	DROP INLET
G.D.I.	GRATED DROP INLET
G.D.I. (N.S.)	GRATED DROP INLET (NARROW SLOT)
J.B.	JUNCTION BOX
M.H.	MANHOLE
T.B.D.I.	TRAFFIC BEARING DROP INLET
T.B.J.B.	TRAFFIC BEARING JUNCTION BOX

4/04/06

10/28/2019
R:\Roadway\Proj\Rand352_Rdy_sum.dgn
ltemnwar

DocuSign Envelope ID: 8F156CA5-0327-4650-A437-27EDB0421585

8/17/99

REVISIONS

PI Sta 10+45.94	PI Sta 18+68.44	PI Sta 20+67.40	PI Sta 22+82.95	PI Sta 24+63.51
△ = 1° 03' 10.3" (RT)	△ = 4° 56' 23.5" (LT)	△ = 24° 32' 52.9" (LT)	△ = 10° 11' 08.0" (LT)	△ = 17° 20' 51.6" (LT)
D = 1° 08' 45.3"	D = 3° 34' 51.6"	D = 9° 35' 10.3"	D = 5° 42' 19.3"	D = 9° 32' 57.5"
L = 91.88'	L = 137.95'	L = 256.08'	L = 178.53'	L = 181.66'
T = 45.94'	T = 69.02'	T = 130.03'	T = 89.50'	T = 91.53'
R = 5,000.00'	R = 1,600.00'	R = 597.69'	R = 1,004.24'	R = 600.00'

-L-

NAD 83/NA 2011

-L- POT Sta. 12+30.00
BEGIN CONSTRUCTION

-L- POC Sta. 20+00.00
END CONSTRUCTION

-L- PC Sta. 10+00.00
-L- PT Sta. 10+91.88
-L- POT Sta. 13+79.09 = -DRIVE- POT Sta. 10+00.00
-L- PC Sta. 17+99.42
-L- PCC Sta. 19+37.37
-L- PT Sta. 25+53.64
-L- PCC Sta. 23+17.97
-L- PCC Sta. 21+93.45

-DRIVE- PC Sta. 10+78.56
-DRIVE- PT Sta. 11+12.95
-DRIVE- PC Sta. 11+34.82
-DRIVE- PT Sta. 12+00.44
-DRIVE- POT Sta. 12+99.77

SR 2143 (CARL ALLRED RD) N 83° 05' 19.0" E
20' WIDE ROADWAY

WAYNE HARLAN CRAVER
DB 1187 PG 1943

LONNIE M ALLRED
DB 1127 PG 178

JACKIE LONDELL SAUNDERS
DB 1635 PG 304
PB 58 PG 79

CLANCY L ALLRED
DB 901 PG 378

CLANCY L ALLRED
DB 1127 PG 176

PAMELA A UNDERHILL
DB 2462 PG 247
PB 31 PG 26

SHERRI KEY THOMPSON
DB 2418 PG 1186
PB 31 PG 26

JEREMY L MCCLAMROCK
DB 1968 PG 1419
PB 31 PG 26

DANNY ROSCOE CORUM
DB 1390 PG 502
PB 31 PG 26

BM#1
EL 572.32
N 736582 E 1785822
BL STA 18+48.00 17 RT
BENCH TIE NAIL IN A
POPLAR TREE

BRIDGE NO. 352
13' SPAN/CONCRETE

15" HDPE w/ELBOWS
18" HDPE w/ELBOWS
18" RCP-IV
REMOVE
RETAIN

SPECIAL LATERAL 'V' DITCH
W/CLASS I RIPRAP
EST 13 TONS
EST 15 SY GFD
EST 5 CY DDE
SEE DETAIL 6/SHEET 2D

SPECIAL LATERAL 'V' DITCH
EST 32 CY DDE
SEE DETAIL 3/SHEET 2D

SHOULDER BERM GUTTER
STA. 14+60 TO STA. 14+76.37 (LT)
STA. 14+60 TO STA. 14+84.63 (RT)

LATERAL 'V' DITCH
W/CLASS I RIPRAP
EST 13 TONS
EST 15 SY GFD
EST 4 CY DDE
SEE DETAIL 2/SHEET 2D

LATERAL 'V' DITCH
W/CLASS I RIPRAP
EST 25 TONS
EST 35 SY GFD
EST 58 CY DDE
SEE DETAIL 2/SHEET 2D

CLASS 'B' RIPRAP
EST 2 TONS
EST 7 SY GFD

STANDARD 'V' DITCH
W/CLASS I RIPRAP
EST 18 TONS
EST 25 SY GFD
EST 6 CY DDE
SEE DETAIL 4/SHEET 2D

EMBANKMENT PROTECTION
CLASS II RIPRAP
EST 17 TONS
EST 18 SY GFD
SEE DETAIL 5/SHEET 2D

CLASS II RIPRAP
(STR. PAY ITEM)

TOE PROTECTION W/
CLASS 'B' RIPRAP
EST 21 TONS
EST 45 SY GFD
SEE DETAIL 1/SHEET 2D

TOE PROTECTION W/
CLASS 'B' RIPRAP
EST 6 TONS
EST 10 SY GFD
SEE DETAIL 1/SHEET 2D

CLASS 'B' RIPRAP
EST 3 TONS
EST 10 SY GFD

EMBANKMENT PROTECTION
CLASS II RIPRAP
EST 10 TONS
EST 10 SY GFD
SEE DETAIL 5/SHEET 2D

STANDARD 'V' DITCH
W/CLASS I RIPRAP
EST 34 TONS
EST 45 SY GFD
EST 40 CY DDE
SEE DETAIL 4/SHEET 2D

CLASS 'B' RIPRAP
EST 2 TONS
EST 7 SY GFD

EIP 2.35' TO R/W
EIP 0.32' TO R/W
EIP 0.24' TO R/W
EIP 1.08' TO R/W
EIP 0.26' TO R/W
EIP 1.33' TO R/W

INV 596.42'
INV 598.51'

WOODS

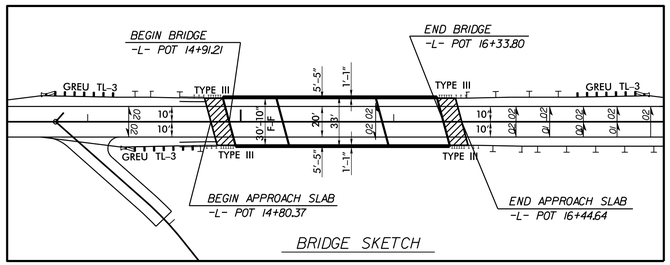

BRIDGE SKETCH

-DRIVE-

PI Sta 10+95.80	PI Sta 11+67.93
△ = 9° 51' 13.8" (RT)	△ = 18° 47' 56.9" (LT)
D = 28° 38' 52.4"	D = 28° 38' 52.4"
L = 34.40'	L = 65.62'
T = 17.24'	T = 33.11'
R = 200.00'	R = 200.00'

FOR PROFILE, SEE SHEET 5

CH ENGINEERING
3220 GLEN ROYAL RD. RALEIGH, NC 27617
TELE 919.788.0224 FAX 919.788.0232
NC LICENSE #P-0189

Kimley»Horn ©2019
421 FAYETTEVILLE STREET, SUITE 600
RALEIGH, N.C. 27601

PROJECT REFERENCE NO.	SHEET NO.
17BP.8.R.132	4

RANDOLPH COUNTY BRIDGE #352

ROADWAY DESIGN ENGINEER
DocuSign Envelope ID: 8F156CA5-0327-4650-A437-27EDB0421585
Brian Allen Wiles
CE1700
NORTH CAROLINA PROFESSIONAL SEAL 16689 ENGINEER BRIAN ALLEN WILES
2/12/2020

HYDRAULICS ENGINEER
DocuSign Envelope ID: 8F156CA5-0327-4650-A437-27EDB0421585
Larry D. Robinson, Jr.
NORTH CAROLINA PROFESSIONAL SEAL 026480 ENGINEER LARRY D. ROBINSON, JR.
2/12/2020

DOCUMENT NOT CONSIDERED FINAL
UNLESS ALL SIGNATURES COMPLETED

12/2/2019
R:\Roadway\Proj\Rand352_Rdy_psh_04.dgn

DocuSign Envelope ID: 8F156CA5-0327-4650-A437-27EDB0421585

CH ENGINEERING
3220 GLEN ROYAL RD. RALEIGH, NC 27617
TELE 919.788.0224 FAX 919.788.0232
NC LICENSE #P-0189

Kimley»Horn ©2019
421 FAYETTEVILLE STREET, SUITE 600
RALEIGH, N.C. 27601

PROJECT REFERENCE NO.	SHEET NO.
17BP.8.R.132	5

ROADWAY DESIGN ENGINEER
DocuSigned by: Brian A. Wiles
BBB4A0A0A0A0A0A0
NORTH CAROLINA PROFESSIONAL SEAL 16689 ENGINEER BRIAN ALLEN WILES
2/12/2020

HYDRAULICS ENGINEER
DocuSigned by: Larry D. Robinson, Jr.
CE17B0A0A0A0A0A0
NORTH CAROLINA PROFESSIONAL SEAL 026480 ENGINEER LARRY D. ROBINSON, JR.
2/12/2020

DOCUMENT NOT CONSIDERED FINAL UNLESS ALL SIGNATURES COMPLETED

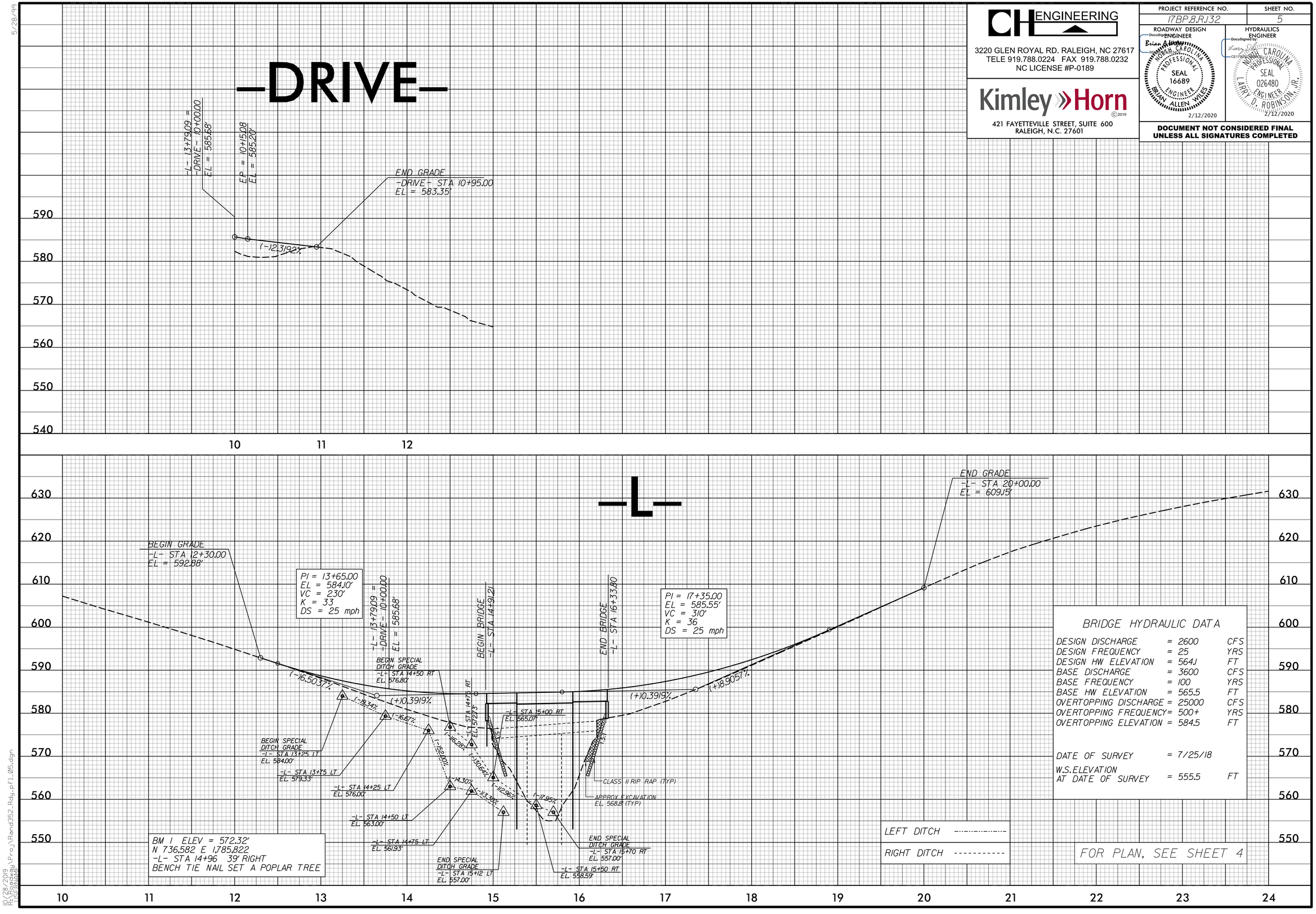

BRIDGE HYDRAULIC DATA

DESIGN DISCHARGE	= 2600	CFS
DESIGN FREQUENCY	= 25	YRS
DESIGN HW ELEVATION	= 564.1	FT
BASE DISCHARGE	= 3600	CFS
BASE FREQUENCY	= 100	YRS
BASE HW ELEVATION	= 565.5	FT
OVERTOPPING DISCHARGE	= 25000	CFS
OVERTOPPING FREQUENCY	= 500+	YRS
OVERTOPPING ELEVATION	= 584.5	FT
DATE OF SURVEY	= 7/25/18	
W.S.ELEVATION AT DATE OF SURVEY	= 555.5	FT

FOR PLAN, SEE SHEET 4

5/28/99

10/28/2019
H:\Roadway\Proj\Rand352_Rdy_pfl_05.dgn
kcrawford

STATE	STATE PROJECT REFERENCE NO.	SHEET NO.	TOTAL SHEETS
N.C.	17BP.8.R.132	RW01	

STATE OF NORTH CAROLINA
DIVISION OF HIGHWAYS

SURVEY CONTROL, EXISTING CENTERLINES, RIGHT OF WAY, EASEMENTS AND PROPERTY TIES

RANDOLPH COUNTY

TIP PROJECT: 750352

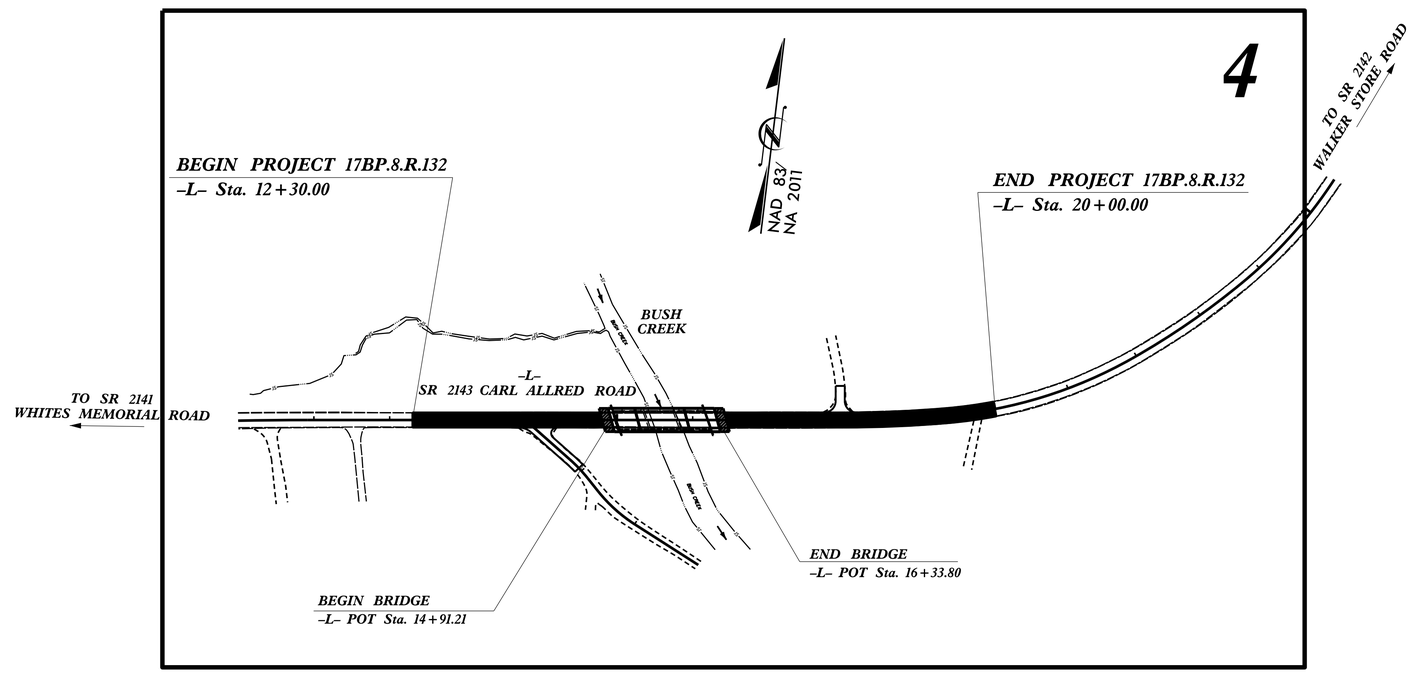

GRAPHIC SCALE

50 25 0 50 100

PLANS

DATUM DESCRIPTION

THE LOCALIZED COORDINATE SYSTEM DEVELOPED FOR THIS PROJECT
IS BASED ON THE STATE PLANE COORDINATES ESTABLISHED BY
NCGS FOR MONUMENT "GPS 102"
WITH NAD 83/NA2011 STATE PLANE GRID COORDINATES OF
NORTHING: 736559.055(ft) EASTING: 1785120.547(ft)
ELEVATION: 621.413(ft)
THE AVERAGE COMBINED GRID FACTOR USED ON THIS PROJECT
(GROUND TO GRID) IS: 0.999887692
THE N.C. LAMBERT GRID BEARING AND
LOCALIZED HORIZONTAL GROUND DISTANCE FROM
"GPS 102" TO -L- STATION 10+00 IS
N 89°37'14" E 204.28(ft)
ALL LINEAR DIMENSIONS ARE LOCALIZED HORIZONTAL DISTANCES
VERTICAL DATUM USED IS NAVD 88

Prepared in the Office of:

KCI ASSOCIATES OF NC
KCI ENGINEERS | PLANNERS | SCIENTISTS | CONSTRUCTION MANAGERS

4505 FALLS OF NEUSE RD
SUITE 400
RALEIGH, NC 27609

2018 STANDARD SPECIFICATIONS

RIGHT OF WAY DATE:

LETTING DATE:

PROFESSIONAL LAND SURVEYOR

NORTH CAROLINA PROFESSIONAL SEAL L-3860 LAND SURVEYOR JAMES M. GELLENTHIN

SIGNATURE: James M. Gellenthin Date: 4/23/2019

STATE OF NORTH CAROLINA • DEPARTMENT OF TRANSPORTATION •

$$$$SYSTIME$$$$
$$$$USERNAME$$$$
$$$$DGN$$$$

SURVEY CONTROL SHEET

W/ EXISTING CENTERLINE ALIGNMENTS PRIOR TO CONSTRUCTION

PROJECT REFERENCE NO.	SHEET NO.
750352	RW02C-1

Location and Surveys

KCI ASSOCIATES OF NC
ENGINEERS | PLANNERS | SCIENTISTS | CONSTRUCTION MANAGERS

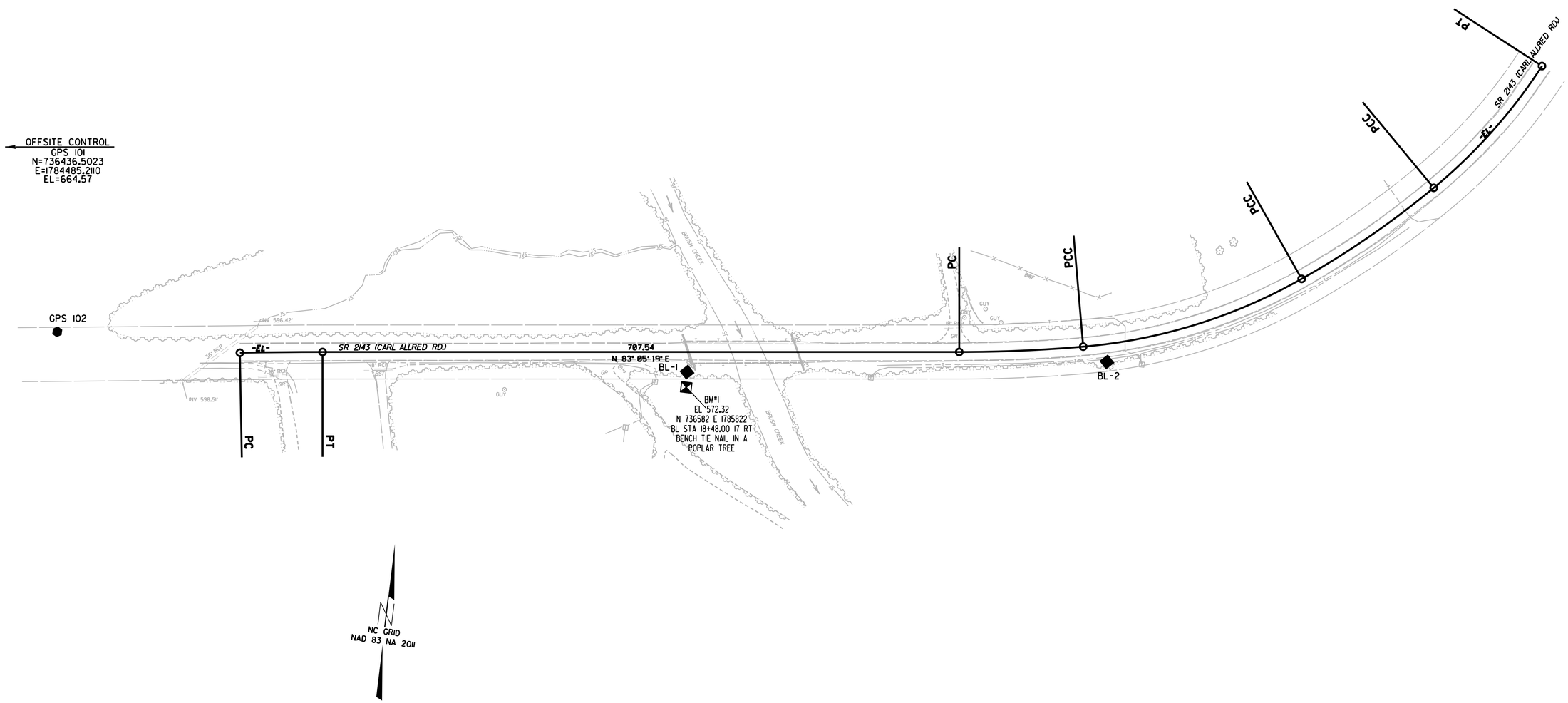

NOTES:

1. PROJECT CONTROL WAS ESTABLISHED USING GNSS, THE GLOBAL NAVIGATION SATELLITE SYSTEM.

2. THE SURVEY CONTROL DATA FOR THIS PROJECT HAS BEEN COMPILED FROM VARIOUS SOURCES. IF FURTHER INFORMATION REGARDING PROJECT CONTROL IS NEEDED, PLEASE CONTACT THE LOCATION AND SURVEYS UNIT.

REVISIONS

6/2/99

23-APR-2019 08:10
K:\2019\3519001\08 NCDOT\F-750352 RW Staking - Randolph Co (Carl Allred Rd)\DRAWINGS\750352_ls_tc-1.dgn
matthew.koss A1 12-2\XP1G2

PROJECT REFERENCE NO.	SHEET NO.
750352	rw02c-2

Location and Surveys

KCI ASSOCIATES OF NC
ENGINEERS | PLANNERS | SCIENTISTS | CONSTRUCTION MANAGERS

SURVEY CONTROL SHEET

W/ EXISTING CENTERLINE ALIGNMENTS PRIOR TO CONSTRUCTION

BL

POINT	DESC.	NORTH	EAST	ELEVATION
101	GPS 101	736436.5023	1784485.2110	664.57
102	GPS 102	736559.0550	1785120.5470	621.41
1	BL-1	736598.7892	1785820.6500	575.16
2	BL-2	736666.1998	1786282.5430	605.56

BM1 ELEVATION = 572.32
N 736582 E 1785822
BENCH TIE NAIL IN A POPLAR TREE

EL

POINT	N	E	BEARING	DIST	DELTA	D	L	T	R
PC	736560.407	1785324.822							
CURVE			N 82°33'43.9" E	91.88	01°03'10.3"(RT)	01°08'45.3"	91.88	45.94	5000.00
PT	736572.301	1785415.928							
LINE			N 83°05'19.0" E	707.54					
PC	736657.443	1786118.330							
CURVE			N 80°37'07.3" E	137.90	04°56'23.5"(LT)	03°34'51.6"	137.95	69.02	1600.00
PCC	736679.922	1786254.389							
CURVE			N 65°52'29.1" E	254.12	24°32'52.9"(LT)	09°35'10.3"	256.08	130.03	597.69
PCC	736783.790	1786486.316							
CURVE			N 48°30'28.7" E	178.29	10°11'08.0"(LT)	05°42'19.3"	178.53	89.50	1004.24
PCC	736901.910	1786619.864							
CURVE			N 34°44'28.9" E	180.97	17°20'51.6"(LT)	09°32'57.5"	181.66	91.53	600.00
PT	737050.620	1786722.994							

NOTES:

1. PROJECT CONTROL WAS ESTABLISHED USING GNSS, THE GLOBAL NAVIGATION SATELLITE SYSTEM.

2. THE SURVEY CONTROL DATA FOR THIS PROJECT HAS BEEN COMPILED FROM VARIOUS SOURCES. IF FURTHER INFORMATION REGARDING PROJECT CONTROL IS NEEDED, PLEASE CONTACT THE LOCATION AND SURVEYS UNIT.

REVISIONS

6/2/99

30-APR-2019 08:52
M:\2019\35190108 NCDOT\F-750352 RW Staking - Randolph Co (Carl Allred Rd)\DRAWINGS\750352_ls-rw02c-2.dgn
matthew.koss AT 12-2VFIG2

PROJECT REFERENCE NO.	SHEET NO.
750352	rw02c-3

Location and Surveys

KCI ASSOCIATES OF NC
ENGINEERS | PLANNERS | SCIENTISTS | CONSTRUCTION MANAGERS

SURVEY CONTROL SHEET

W/ EXISTING CENTERLINE ALIGNMENTS PRIOR TO CONSTRUCTION

POINT	N	E	BEARING	DIST	DELTA	D	L	T	R
PC	736560.407	1785324.822							
CURVE			N 82°33'43.9" E	91.88	01°03'10.3"(RT)	01°08'45.3"	91.88	45.94	5000.00
PT	736572.301	1785415.928							
LINE			N 83°05'19.0" E	707.54					
PC	736657.443	1786118.330							
CURVE			N 80°37'07.3" E	137.90	04°56'23.5"(LT)	03°34'51.6"	137.95	69.02	1600.00
PCC	736679.922	1786254.389							
CURVE			N 65°52'29.1" E	254.12	24°32'52.9"(LT)	09°35'10.3"	256.08	130.03	597.69
PCC	736783.790	1786486.316							
CURVE			N 48°30'28.7" E	178.29	10°11'08.0"(LT)	05°42'19.3"	178.53	89.50	1004.24
PCC	736901.910	1786619.864							
CURVE			N 34°44'28.9" E	180.97	17°20'51.6"(LT)	09°32'57.5"	181.66	91.53	600.00
PT	737050.620	1786722.994							

NOTES:

1. PROJECT CONTROL WAS ESTABLISHED USING GNSS, THE GLOBAL NAVIGATION SATELLITE SYSTEM.
2. THE SURVEY CONTROL DATA FOR THIS PROJECT HAS BEEN COMPILED FROM VARIOUS SOURCES. IF FURTHER INFORMATION REGARDING PROJECT CONTROL IS NEEDED, PLEASE CONTACT THE LOCATION AND SURVEYS UNIT.

REVISIONS

6/2/99

23-APR-2019 12:35
R:\2019\35190108 NCDOT\F-750352 RW Staking - Randolph Co (Carl Allred Rd)\DRAWINGS\750352_ls_rw02c-3.dgn
matthew.kess AT 12-2VXP1G2

PROPOSED ALIGNMENT CONTROL SHEET

PROJECT REFERENCE NO.	SHEET NO.
750352	rw02d-1

Location and Surveys

KCI ASSOCIATES OF NC
ENGINEERS | PLANNERS | SCIENTISTS | CONSTRUCTION MANAGERS

POINT	N	E	BEARING	DIST	DELTA	D	L	T	R
PC	736560.407	1785324.822							
CURVE			N 82°33'43.9" E	91.88	01°03'10.3"(RT)	01°08'45.3"	91.88	45.94	5000.00
PT	736572.301	1785415.928							
LINE			N 83°05'19.0" E	707.54					
PC	736657.443	1786118.330							
CURVE			N 80°37'07.3" E	137.90	04°56'23.5"(LT)	03°34'51.6"	137.95	69.02	1600.00
PCC	736679.922	1786254.389							
CURVE			N 65°52'29.1" E	254.12	24°32'52.9"(LT)	09°35'10.3"	256.08	130.03	597.69
PCC	736783.790	1786486.316							
CURVE			N 48°30'28.7" E	178.29	10°11'08.0"(LT)	05°42'19.3"	178.53	89.50	1004.24
PCC	736901.910	1786619.864							
CURVE			N 34°44'28.9" E	180.97	17°20'51.6"(LT)	09°32'57.5"	181.66	91.53	600.00
PT	737050.620	1786722.994							

NOTES:

1. PROJECT CONTROL WAS ESTABLISHED USING GNSS, THE GLOBAL NAVIGATION SATELLITE SYSTEM.

2. THE PROPOSED ALIGNMENT CONTROL DATA FOR THIS PROJECT HAS BEEN COMPILED FROM VARIOUS SOURCES. IF FURTHER INFORMATINO REGARDING PROJECT CONTROL IS NEEDED, PLEASE CONTACT THE LOCATION AND SURVEYS UNIT.

REVISIONS

6/2/99
23-APR-2018 13:59:18 NCDOT\F-750352 RW Staking - Randolph Co (Carl Allred Rd)\DRAWINGS\750352_ls_rw02d-1.dgn
mathewkoss AT (2-2)\XPIC2

RIGHT OF WAY CONTROL SHEET

PROJECT REFERENCE NO.	SHEET NO.
750352	rw03e-1

KCI ASSOCIATES OF NC
KCI ENGINEERS | PLANNERS | SCIENTISTS | CONSTRUCTION MANAGERS

PROJECT SURVEYOR

NORTH CAROLINA PROFESSIONAL SEAL L-3860 LAND SURVEYOR JAMES M. GELLENTHIN

I, James m. Gellenthin, a Professional Land Surveyor in the state of North Carolina hereby certify to the best of my knowledge and belief that the following work item(s) (R/W Staking) performed under my responsible charge meet NCDOT Survey Standards as directed in the NCDOT Location & Surveys guidelines and procedures.

I further certify that the right of way and permanent easement points shown herein and outlined in the tables shown hereon (localized coordinates, station/offset) have been checked and are accurate representations of the right of way and permanent easement points depicted on the corresponding highway plans. I also certify that the right of way and permanent easement points shown herein have been field monumented under my supervision from existing survey control provided by others; that the depicted property data shown herein were surveyed by others; and these monuments denote the right of way and easement boundaries at the time of staking which may be subject to change due to right of way revisions (See deeds for final determination).

Witness my original signature, registration number and seal this 23rd day of April, 2019.

_____ L-3860
Professional Land Surveyor PLS # Seal

ROW MARKER IRON PIN AND CAP-E

ALIGN	STATION	OFFSET	NORTH	EAST
L	13+95.00	-75.00	736683.2318	1785707.8201
L	13+95.00	-30.00	736638.5588	1785713.2351
L	14+40.00	30.00	736584.4099	1785765.1282
L	15+00.00	75.00	736546.9569	1785830.1072
L	17+00.00	-75.00	736719.9337	1786010.6038
L	17+00.00	-30.00	736675.2607	1786016.0188
L	17+00.00	30.00	736615.6967	1786023.2389
L	17+00.00	75.00	736571.0237	1786028.6539

NOTES:

1. IF FURTHER INFORMATION REGARDING PROJECT CONTROL IS NEEDED, PLEASE CONTACT THE LOCATION AND SURVEYS UNIT.

2. PROJECT CONTROL WAS ESTABLISHED USING GNSS, THE GLOBAL NAVIGATION SATELLITE SYSTEM.

REVISIONS

6/2/99

23-APR-2019 16:06
R:\2015\5910108 NCDOT\F-750352 RW Staking - Randolph Co (Carl Allred Rd)\DRAWINGS\750352_ls_rw03e-1.dgn
matthewkoss AT (2-2)XP102

PROJECT REFERENCE NO.	SHEET NO.
750352	RW04

Location and Surveys

KCI ASSOCIATES OF NC
ENGINEERS | PLANNERS | SCIENTISTS | CONSTRUCTION MANAGERS

I, James M. Gellenthin, a Professional Land Surveyor in the state of North Carolina hereby certify to the best of my knowledge and belief that the following work item(s) (R/W Staking) performed under my responsible charge meet NCDOT Survey Standards as directed in the NCDOT Location & Surveys guidelines and procedures.

I further certify that the right of way and permanent easement points shown herein and outlined in the tables shown hereon (localized coordinates, station/offset) have been checked and are accurate representations of the right of way and permanent easement points depicted on the corresponding highway plans. I also certify that the right of way and permanent easement points shown herein have been field monumented under my supervision from existing survey control provided by others; that the depicted property data shown herein were surveyed by others; and these monuments denote the right of way and easement boundaries at the time of staking which may be subject to change due to right of way revisions (See deeds for final determination).

Witness my original signature, registration number and seal this 30th day of April, 2019.

Professional Land Surveyor L-3860 PLS # Seal

PROJECT SURVEYOR

NORTH CAROLINA PROFESSIONAL SEAL L-3860 LAND SURVEYOR JAMES M. GELLENTHIN

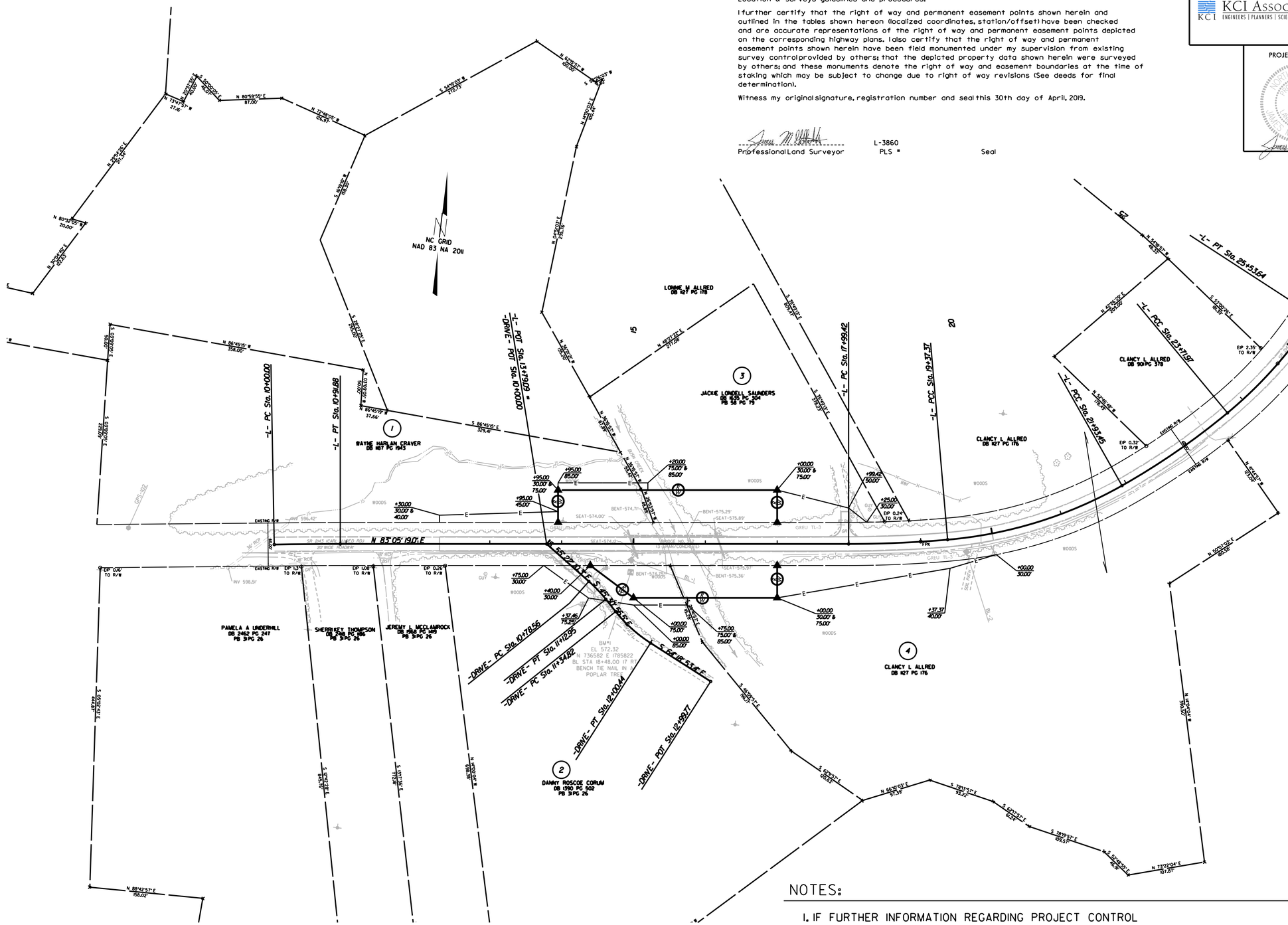

NOTES:

1. IF FURTHER INFORMATION REGARDING PROJECT CONTROL IS NEEDED, PLEASE CONTACT THE LOCATION AND SURVEYS UNIT.

2. PROJECT CONTROL WAS ESTABLISHED USING GNSS, THE GLOBAL NAVIGATION SATELLITE SYSTEM.

REVISIONS

6/2/99

30-APR-2019 09:01
RW-2015-2019\08 NCDOT\F-750352 RW Staking - Randolph Co (Carl Allred Rd)\DELIVERABLES\4-23-2019\750352_ls_rw04.dgn
matthew.koss AT (2-2)\xplnr

DocuSign Envelope ID: 87A6CF53-D219-4B38-97B7-559EE8E7E0F0

STATE OF NORTH CAROLINA
DIVISION OF HIGHWAYS

TRANSPORTATION MANAGEMENT PLAN

RANDOLPH COUNTY

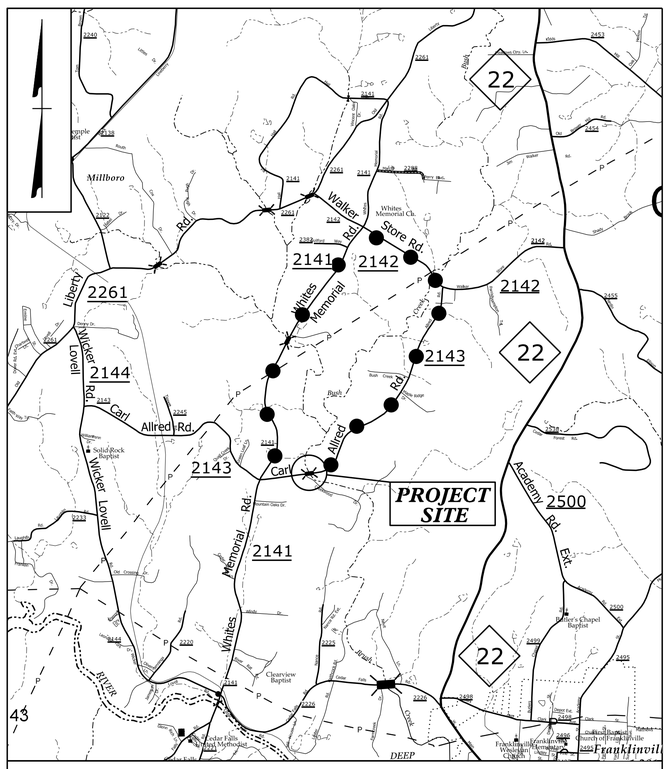

VICINITY MAP

DETOUR ROUTE

LOCATION: BRIDGE NO. 352 OVER BUSH CREEK ON SR 2143 (CARL ALLRED ROAD)

TYPE OF WORK: GRADING, DRAINAGE, PAVING, & STRUCTURE

INDEX OF SHEETS

SHEET NO.	TITLE
TMP-1	TITLE SHEET, VICINITY MAP, AND INDEX OF SHEETS
TMP-1A	LIST OF APPLICABLE ROADWAY STANDARD DRAWINGS, AND LEGEND
TMP-1B	TRANSPORTATION OPERATIONS PLAN: (MANAGEMENT STRATEGIES, GENERAL NOTES, AND LOCAL NOTES)
TMP-2	SPECIAL SIGN DESIGN
TMP-3	OFF-SITE DETOUR
TMP-4	ROAD CLOSURE DETAIL AND DETOUR SIGNS

SHEET NO.
TMP-1

17BP.8.R.132

PROJECT:

DOCUMENT NOT CONSIDERED FINAL UNLESS ALL SIGNATURES COMPLETED

WORK ZONE SAFETY & MOBILITY
"from the MOUNTAINS to the COAST"

PLANS PREPARED BY:
BRIAN A. WILES, PE
PROJECT MANAGER

NCDOT CONTACTS:
TIM WELCH, PE
DIV. 8 BRIDGE PROGRAM MANAGER

PLANS PREPARED FOR:
DIVISION OF HIGHWAYS
DIVISION 8
121 DOT Drive
Carthage, NC 28327

PLANS PREPARED BY:
CH ENGINEERING
3220 GLEN ROYAL RD. RALEIGH, NC 27617
TELE 919.788.0224 FAX 919.788.0232
NC LICENSE #P-0189

APPROVED: DocuSigned by: Brian A Wiles 889DD0FEA2E34DE...

DATE: 2/12/2020

SEAL

NORTH CAROLINA PROFESSIONAL SEAL 16689 ENGINEER BRIAN ALLEN WILES

10/28/2019
R:\Traffic\TrafficControl\TCP\Randolph352_TC_TMP_1.dgn
USERNAME=

DocuSign Envelope ID: 87A6CF53-D219-4B38-97B7-559EE8E7E0F0

PROJ. REFERENCE NO.	SHEET NO.
17BP.8.R.132	TMP-1A

ROADWAY STANDARD DRAWINGS

THE FOLLOWING ROADWAY STANDARDS AS SHOWN IN "ROADWAY STANDARD DRAWINGS" - N.C. DEPARTMENT OF TRANSPORTATION - RALEIGH, N.C., DATED JANUARY 2018 ARE APPLICABLE TO THIS PROJECT AND BY REFERENCE HEREBY ARE CONSIDERED A PART OF THESE PLANS:

STD. NO.	TITLE
1101.03	TEMPORARY ROAD CLOSURES
1101.11	TRAFFIC CONTROL DESIGN TABLES
1110.01	STATIONARY WORK ZONE SIGNS
1145.01	BARRICADES
1205.01	PAVEMENT MARKINGS - LINE TYPES AND OFFSETS
1205.02	PAVEMENT MARKINGS - TWO-LANE AND MULTI-LANE ROADWAYS
1205.12	PAVEMENT MARKINGS - BRIDGES
1261.01	GUARDRAIL AND BARRIER DELINEATORS - INSTALLATION SPACING
1261.02	GUARDRAIL AND BARRIER DELINEATORS - TYPES AND MOUNTING
1262.01	GUARDRAIL END DELINEATION

LEGEND

GENERAL

EXIST. PVMT.

NORTH ARROW

PROPOSED PVMT.

TRAFFIC CONTROL DEVICES

BARRICADE (TYPE III)

TEMPORARY SIGNING

STATIONARY SIGN

FINAL PAVEMENT MARKING

PAINT PAVEMENT MARKING LINES (4")	6,200 LF
PERMANENT RAISED PAVEMENT MARKERS	20 EACH

CH ENGINEERING
3220 GLEN ROYAL RD. RALEIGH, NC 27617
TELE 919.788.0224 FAX 919.788.0232
NC LICENSE #P-0189

APPROVED: DocuSigned by: Brian A Wiles 889ODDFEA2E34DE...

DATE: 2/12/2020

SEAL

NORTH CAROLINA PROFESSIONAL SEAL 16689 ENGINEER BRIAN ALLEN WILES

DOCUMENT NOT CONSIDERED FINAL UNLESS ALL SIGNATURES COMPLETED

DIVISION OF HIGHWAYS · STATE OF NORTH CAROLINA · DEPARTMENT OF TRANSPORTATION · WORK ZONE TRAFFIC CONTROL

ROADWAY STANDARD DRAWINGS & LEGEND

10/28/2019
R:\Traffic\TrafficControl\TCP\Randolph352_TC_TMP_1A.dgn
USERNAME:

DocuSign Envelope ID: 87A6CF53-D219-4B38-97B7-559EE8E7E0F0

PROJ. REFERENCE NO.	SHEET NO.
17BP.8.R.132	TMP-1B

MANAGEMENT STRATEGIES

-CLOSE SR 2143 (CARL ALLRED ROAD) AND DETOUR TRAFFIC OFF-SITE

-MAINTAIN LOCAL ACCESS TO ALL RESIDENCES AND BUSINESSES BETWEEN CLOSURE POINTS AT ALL TIMES DURING CONSTRUCTION

LOCAL NOTES

1) NOTIFY THE ENGINEER AT LEAST 30 DAYS PRIOR TO ANY TRAFFIC PATTERN ALTERATION.

2) NOTIFY THE RANDOLPH COUNTY SCHOOLS TRANSPORTATION OFFICE AT (336) 633-5144 OF THE BRIDGE REMOVAL 30 DAYS PRIOR TO ROAD CLOSURE.

3) NOTIFY THE RANDOLPH COUNTY EMERGENCY MANAGEMENT AT (336) 318-6913 OF THE BRIDGE REMOVAL 30 DAYS PRIOR TO ROAD CLOSURE.

GENERAL NOTES

CHANGES MAY BE REQUIRED WHEN PHYSICAL DIMENSIONS IN THE DETAIL DRAWINGS, STANDARD DETAILS, AND ROADWAY DETAILS ARE NOT ATTAINABLE TO MEET FIELD CONDITIONS OR RESULT IN DUPLICATE OR UNDESIRED OVERLAPPING OF DEVICES. MODIFICATION MAY INCLUDE: MOVING, SUPPLEMENTING, COVERING, OR REMOVAL OF DEVICES AS DIRECTED BY THE ENGINEER.

THE FOLLOWING GENERAL NOTES APPLY AT ALL TIMES FOR THE DURATION OF THE CONSTRUCTION PROJECT EXCEPT WHEN OTHERWISE NOTED IN THE PLAN OR DIRECTED BY THE ENGINEER.

SIGNING

A) PROVIDE SIGNING AND DEVICES REQUIRED TO CLOSE THE ROAD ACCORDING TO THE ROADWAY STANDARD DRAWINGS AND TRANSPORTATION MANAGEMENT PLANS.

PROVIDE SIGNING REQUIRED FOR THE OFF-SITE DETOUR ROUTE AS SHOWN IN THE TRANSPORTATION MANAGEMENT PLANS.

B) COVER OR REMOVE ALL SIGNS AND DEVICES REQUIRED TO CLOSE THE ROAD WHEN ROAD CLOSURE IS NOT IN OPERATION.

COVER OR REMOVE ALL SIGNS REQUIRED FOR THE OFF-SITE DETOUR WHEN THE DETOUR IS NOT IN OPERATION.

C) ENSURE ALL NECESSARY SIGNING IS IN PLACE PRIOR TO ALTERING ANY TRAFFIC PATTERN.

PHASING

STEP 1) USING RSD 1101.03, SHEET 1 OF 9 AND TMP-4, CLOSE SR 2143 (CARL ALLRED RD) AND DETOUR TRAFFIC OFF-SITE AS SHOWN ON TMP-3. MAINTAIN ACCESS TO ALL RESIDENCES AND BUSINESSES BETWEEN CLOSURE POINTS.

STEP 2) REMOVE THE EXISTING STRUCTURE.

STEP 3) CONSTRUCT THE PROPOSED STRUCTURE AND ROADWAY.

STEP 4) PLACE FINAL PAVEMENT MARKINGS.

STEP 5) OPEN SR 2143 (CARL ALLRED RD) TO TRAFFIC AND REMOVE ALL WORK ZONE TRAFFIC CONTROL DEVICES.

CH ENGINEERING
3220 GLEN ROYAL RD. RALEIGH, NC 27617
TELE 919.788.0224 FAX 919.788.0232
NC LICENSE #P-0189

APPROVED: DocuSigned by: Brian A Wiles 889DD0FEA2E34DE...

DATE: 2/12/2020

SEAL

NORTH CAROLINA PROFESSIONAL SEAL 16689 ENGINEER BRIAN ALLEN WILES

DOCUMENT NOT CONSIDERED FINAL UNLESS ALL SIGNATURES COMPLETED

DIVISION OF HIGHWAYS STATE OF NORTH CAROLINA DEPARTMENT OF TRANSPORTATION WORK ZONE TRAFFIC CONTROL

TRANSPORTATION OPERATIONS PLAN

10/28/2019
R:\Traffic\TrafficControl\TCP\Randolph352_TC_TMP_1B.dgn
USERNAME:

DocuSign Envelope ID: 87A6CF53-D219-4B38-97B7-559EE8E7E0F0

PROJ. REFERENCE NO.	SHEET NO.
17BP.8.R.132	TMP-2

SIGN NUMBER: SP-1
TYPE: STATIONARY
QUANTITY: SEE PLANS

SIGN WIDTH: 3′-6″
HEIGHT: 2′-0″
TOTAL AREA: 7.0 Sq.Ft.

BORDER TYPE: INSET
RECESS: 0.47″
WIDTH: 0.63″
RADII: 1.5″

NO. Z BARS:
LENGTH:

BACKG COLOR: Fluorescent Orange
COPY COLOR: Black

SYMBOL	X	Y	WID	HT

MAT′L: 0.080″ (2.0 mm) ALUMINUM

USE NOTES: 1,2

1. Legend and border shall be direct applied black non-reflective sheeting.
2. Background shall be NC GRADE B fluorescent orange retroreflective sheeting.

DESIGN BY: TAG
PROJECT ID: ID
CHECKED BY:
LOCATION:
Sep 23, 2019
DIV: DIV

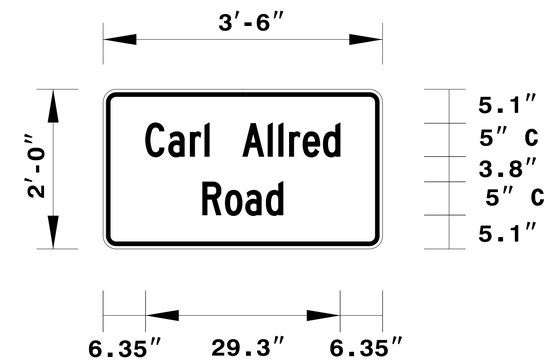

BORDER
R=1.5″
TH=0.63″
IN=0.47″

Spacing Factor is 1 unless specified otherwise

LETTER POSITIONS

Letter locations are panel edge to lower left corner

																											Series/Size Text Length
	C	a	r	l		A	l	l	r	e	d																C 2000
	6.4	9.8	13.1	15.3	16	21	24.8	26.4	28	30	33.1																29.3
	R	o	a	d																							C 2000
	14.9	18.3	21.4	24.5																							12.1

FILENAME: SIGN DESIGNS - Work Zone_2

NORTH CAROLINA D.O.T. SIGN DETAIL

CH ENGINEERING
3220 GLEN ROYAL RD. RALEIGH, NC 27617
TELE 919.788.0224 FAX 919.788.0232
NC LICENSE #P-0189

APPROVED: DocuSigned by: Brian A Wiles 8890D0FEA2E34DE...
DATE: 2/12/2020
SEAL

NORTH CAROLINA PROFESSIONAL SEAL 16689 ENGINEER BRIAN ALLEN WILES

DOCUMENT NOT CONSIDERED FINAL UNLESS ALL SIGNATURES COMPLETED

DIVISION OF HIGHWAYS · STATE OF NORTH CAROLINA · DEPARTMENT OF TRANSPORTATION · WORK ZONE TRAFFIC CONTROL

SPECIAL SIGN DESIGN

10/28/2019
R:\Traffic\TrafficControl\TCP\Randolph352_TC_TMP_2.dgn
USERNAME:

DocuSign Envelope ID: 87A6CF53-D219-4B38-97B7-559EE8E7E0F0

PROJ. REFERENCE NO.	SHEET NO.
17BP.8.R.132	TMP-3

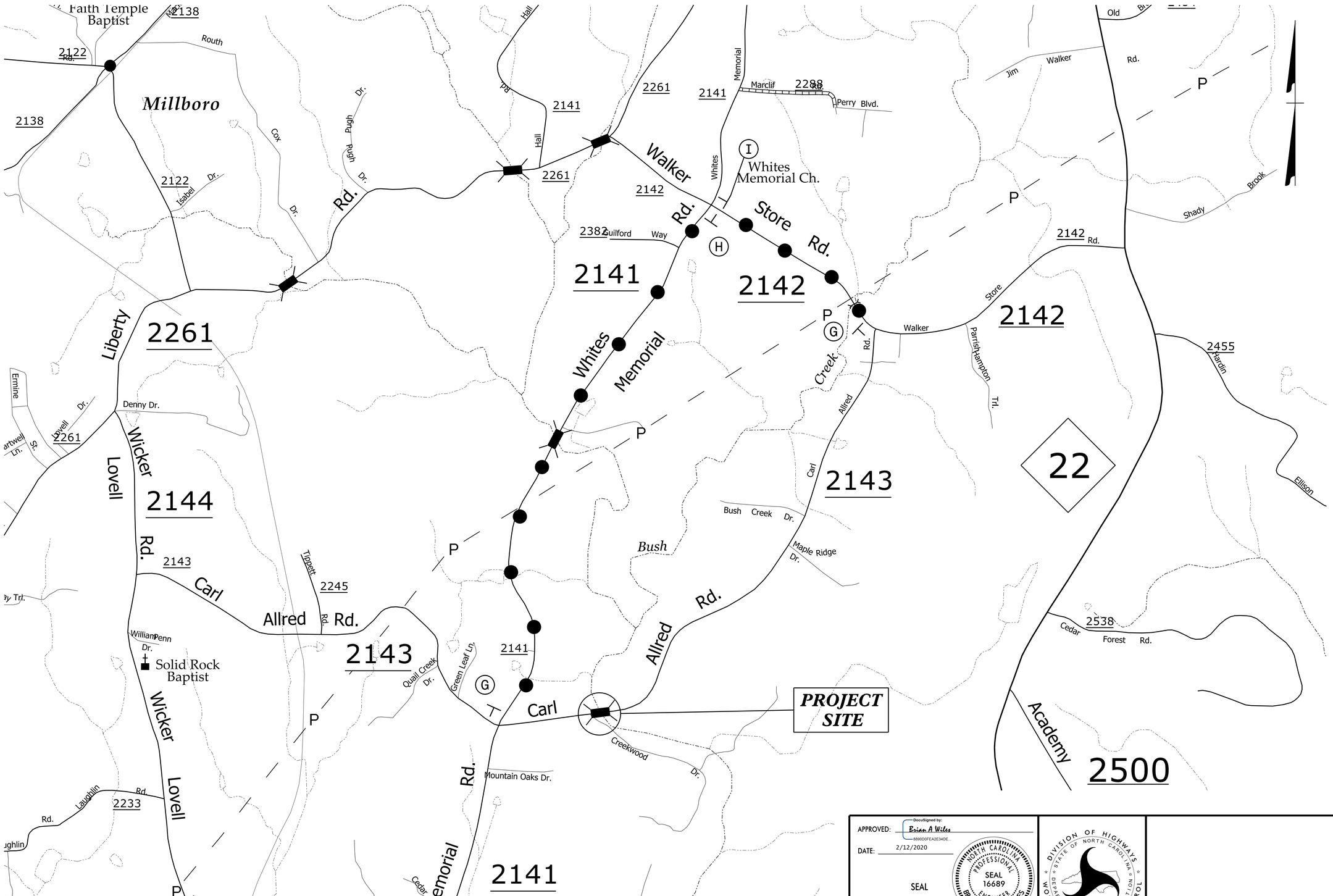

APPROVED: DocuSigned by: Brian A Wiles 889CD0FEA2E34DE...

DATE: 2/12/2020

SEAL

NORTH CAROLINA PROFESSIONAL SEAL 16689 ENGINEER BRIAN ALLEN WILES

DOCUMENT NOT CONSIDERED FINAL UNLESS ALL SIGNATURES COMPLETED

DIVISION OF HIGHWAYS · STATE OF NORTH CAROLINA · DEPARTMENT OF TRANSPORTATION · WORK ZONE TRAFFIC CONTROL

11/27/2019
R:\Traffic\TrafficControl\TCP\Randolph352_TC_TMP_3.dgn
USERNAME=

DocuSign Envelope ID: 87A6CF53-D219-4B38-97B7-559EE8E7E0F0

PROJ. REFERENCE NO.	SHEET NO.
17BP.8.R.131	TMP-4

INSET A

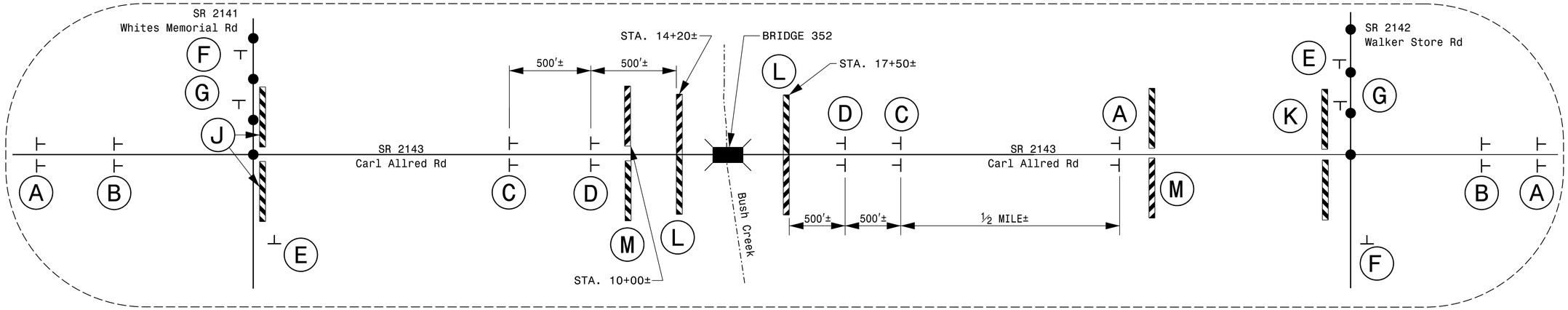

W20-3
48" X 48"

A

W20-2
48" X 48"

B

W20-3
48" X 48"

C

W20-3
48" X 48"

D

W20-3
48" X 48"

NEXT RIGHT

SP-4R
42" X 12"

E

W20-3
48" X 48"

NEXT LEFT

SP-4L
42" X 12"

F

M4-8 A
24" X 18"

G

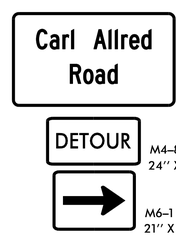

SP-1
42" X 24"

M4-8
24" X 12"

M6-1
21" X 15"

H

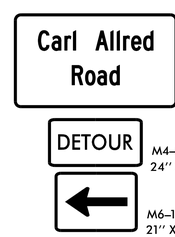

SP-1
42" X 24"

M4-8
24" X 12"

M6-1 L
21" X 15"

I

R11-4
60" x 30"

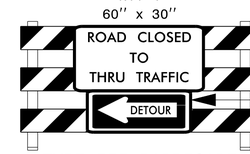

M4-10L
48" x 18"

TYPE III BARRICADE

J

R11-3
60" x 30"

M4-10R
48" x 18"

TYPE III BARRICADE

K

R11-2
48" x 30"

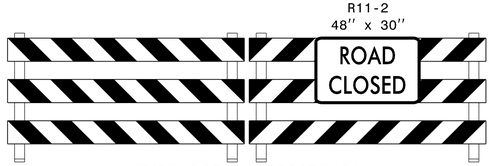

TYPE III BARRICADE(S)

L

R11-4
60" x 30"

TYPE III BARRICADE

M

CH ENGINEERING
3220 GLEN ROYAL RD. RALEIGH, NC 27617
TELE 919.788.0224 FAX 919.788.0232
NC LICENSE #P-0189

APPROVED: DocuSigned by: Brian A Wiles 889DD0FEA2E34DE...

DATE: 2/12/2020

SEAL

NORTH CAROLINA PROFESSIONAL SEAL 16689 ENGINEER BRIAN ALLEN WILES

DOCUMENT NOT CONSIDERED FINAL UNLESS ALL SIGNATURES COMPLETED

DIVISION OF HIGHWAYS · STATE OF NORTH CAROLINA · DEPARTMENT OF TRANSPORTATION · WORK ZONE TRAFFIC CONTROL

ROAD CLOSURE DETAIL and DETOUR SIGNS

11/27/2019
R:\Traffic\TrafficControl\TCP\Randolph352_TC_TMP_4.dgn
USERNAME

TIP PROJECT: BRIDGE 352

STATE	STATE PROJECT REFERENCE NO.	SHEET NO.	TOTAL SHEETS
N.C.	17BP.8.R.132	EC-1	

STATE PROJ. NO.	F. A. PROJ. NO.	DESCRIPTION
17BP.8.R.132		P.E.

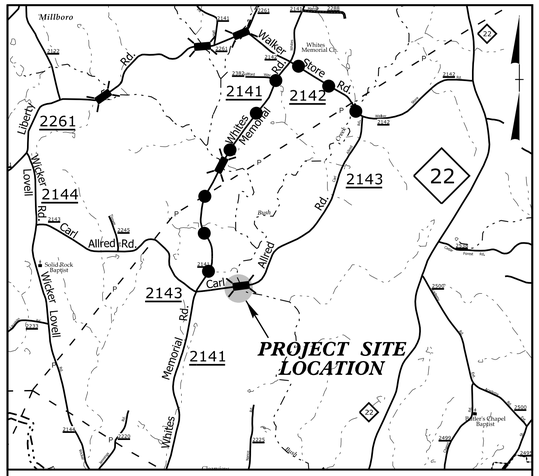

VICINITY MAP

OFF-SITE DETOUR ROUTE

N.T.S.

RW PLANS 03/14/2019

STATE OF NORTH CAROLINA
DIVISION OF HIGHWAYS

PLAN FOR PROPOSED
HIGHWAY EROSION CONTROL

RANDOLPH COUNTY

LOCATION: BRIDGE 352 OVER BUSH CREEK ON SR 2143 (CARL ALLRED ROAD)

TYPE OF WORK: GRADING, DRAINAGE, PAVING & STRUCTURE

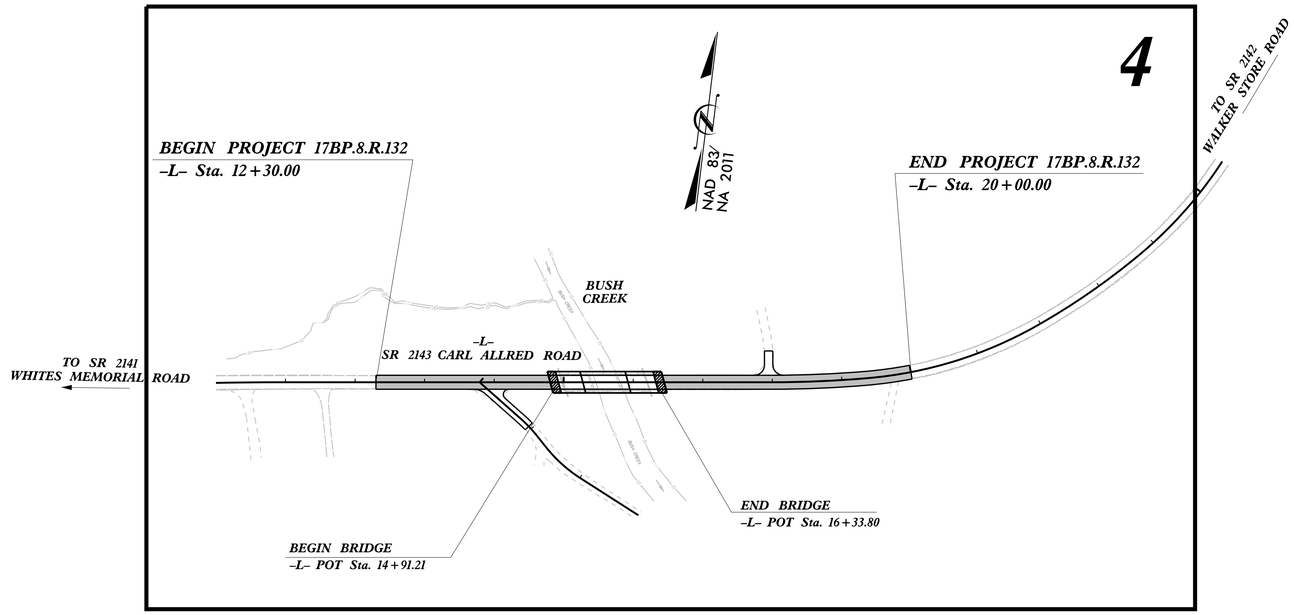

EROSION AND SEDIMENT CONTROL MEASURES

Std. #	Description	Symbol
1630.03	Temporary Silt Ditch	TSD
1630.05	Temporary Diversion	TD
1605.01	Temporary Silt Fence	
1606.01	Special Sediment Control Fence	
1622.01	Temporary Berms and Slope Drains	
1630.02	Silt Basin Type B	
1633.01	Temporary Rock Silt Check Type-A	
	Temporary Rock Silt Check Type-A with Matting and Polyacrylamide (PAM)	
1633.02	Temporary Rock Silt Check Type-B	
	Wattle / Coir Fiber Wattle	SW CFW
	Wattle / Coir Fiber Wattle with Polyacrylamide (PAM)	
1634.01	Temporary Rock Sediment Dam Type-A	
1634.02	Temporary Rock Sediment Dam Type-B	
1635.01	Rock Pipe Inlet Sediment Trap Type-A	
1635.02	Rock Pipe Inlet Sediment Trap Type-B	
1630.04	Stilling Basin	
1630.06	Special Stilling Basin	
	Rock Inlet Sediment Trap:	
1632.01	Type A	A
1632.02	Type B	B
1632.03	Type C	C
	Skimmer Basin	
	Tiered Skimmer Basin	
	Infiltration Basin	

THIS PROJECT CONTAINS EROSION CONTROL PLANS FOR CLEARING AND GRUBBING PHASE OF CONSTRUCTION.

GRAPHIC SCALE

0 PLANS

0 PROFILE (HORIZONTAL)

0 PROFILE (VERTICAL)

THESE EROSION AND SEDIMENT CONTROL PLANS COMPLY WITH THE REGULATIONS SET FORTH BY THE NCG-010000 GENERAL CONSTRUCTION PERMIT EFFECTIVE APRIL 1, 2019 AND ISSUED BY THE NORTH CAROLINA DEPARTMENT OF ENVIRONMENTAL QUALITY DIVISION OF WATER RESOURCES.

Prepared in the Office of:

Kimley»Horn ©2019

421 FAYETTEVILLE STREET, SUITE 600
RALEIGH, NC 27601

Designed by:

VANCE BLANTON — NAME
3708 — LEVEL III CERTIFICATION NO.

Reviewed in the Office of:

ROADSIDE ENVIRONMENTAL UNIT
1 South Wilmington St.
Raleigh, NC 27611

2019 STANDARD SPECIFICATIONS

Reviewed by:

AARON HARPER, P.E.

Roadway Standard Drawings

The following roadway english standards as appear in "Roadway Standard Drawings"– Roadway Design Unit – N. C. Department of Transportation – Raleigh, N. C., dated January 2018 and the latest revison thereto are applicable to this project and by reference hereby are considered a part of these plans.

1604.01	Railroad Erosion Control Detail	1632.01	Rock Inlet Sediment Trap Type A
1605.01	Temporary Silt Fence	1632.02	Rock Inlet Sediment Trap Type B
1606.01	Special Sediment Control Fence	1632.03	Rock Inlet Sediment Trap Type C
1607.01	Gravel Construction Entrance	1633.01	Temporary Rock Silt Check Type A
1622.01	Temporary Berms and Slope Drains	1633.02	Temporary Rock Silt Check Type B
1630.01	Riser Basin	1634.01	Temporary Rock Sediment Dam Type A
1630.02	Silt Basin Type B	1634.02	Temporary Rock Sediment Dam Type B
1630.03	Temporary Silt Ditch	1635.01	Rock Pipe Inlet Sediment Trap Type A
1630.04	Stilling Basin	1635.02	Rock Pipe Inlet Sediment Trap Type B
1630.05	Temporary Diversion	1640.01	Coir Fiber Baffle
1630.06	Special Stilling Basin	1645.01	Temporary Stream Crossing
1631.01	Matting Installation		

SYSTIME
USERNAME

PROJECT REFERENCE NO.	SHEET NO.
17BP.8.R.132	EC-2
R/W SHEET NO.	
ROADWAY DESIGN ENGINEER	HYDRAULICS ENGINEER

TEMPORARY ROCK SILT CHECK TYPE 'A' WITH EXCELSIOR MATTING AND POLYACRYLAMIDE (PAM)

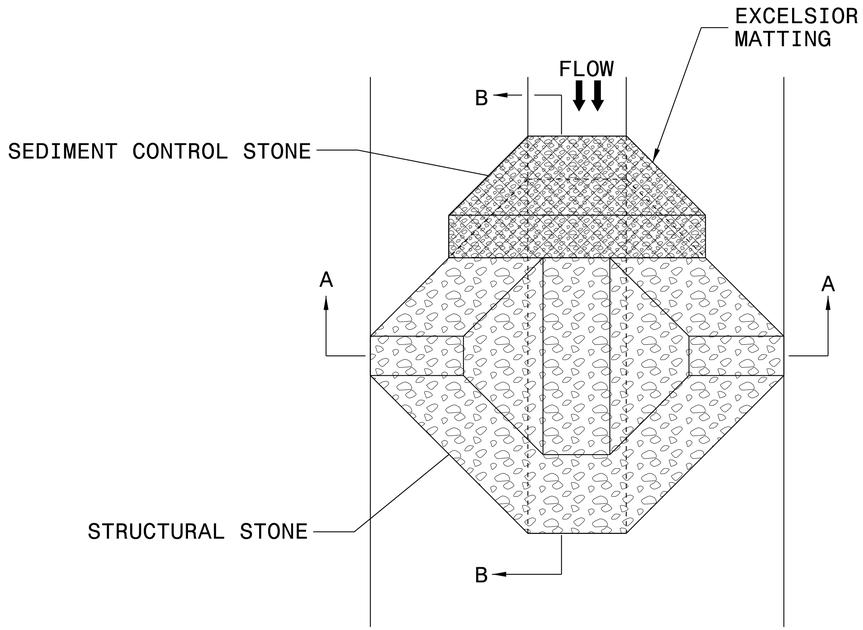

PLAN

NOTES:

INSTALL TEMPORARY ROCK SILT CHECK TYPE A IN ACCORDANCE WITH ROADWAY STANDARD DRAWING NO. 1633.01.

USE EXCELSIOR FOR MATTING MATERIAL AND ANCHOR MATTING SECTION AT TOP AND BOTTOM WITH CLASS B STONE.

PRIOR TO POLYACRYLAMIDE (PAM) APPLICATION, OBTAIN A SOIL SAMPLE FROM PROJECT LOCATION, AND FROM OFFSITE MATERIAL, AND ANALYZE FOR APPROPRIATE PAM FLOCCULANT TO BE APPLIED TO EACH ROCK SILT CHECK.

INITIALLY APPLY 4 OUNCES OF POLYACRYLAMIDE (PAM) TO TOP OF MATTING SECTION AND AFTER EVERY RAINFALL EVENT THAT EQUALS OR EXCEEDS 0.50 INCHES.

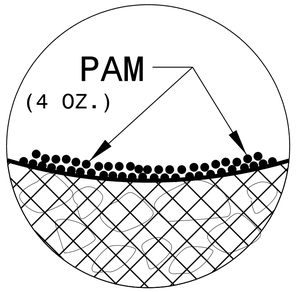

INSET A

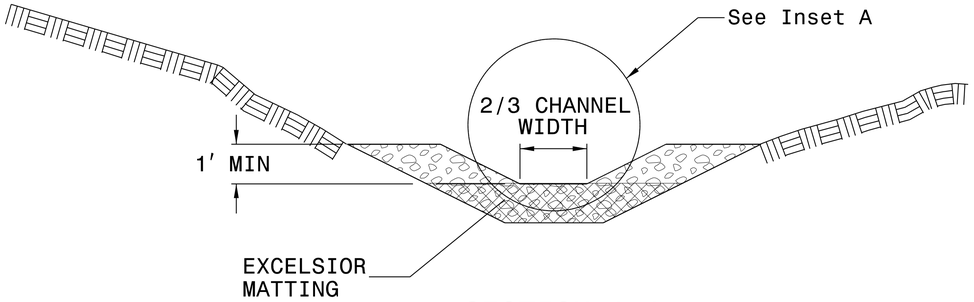

SECTION A-A

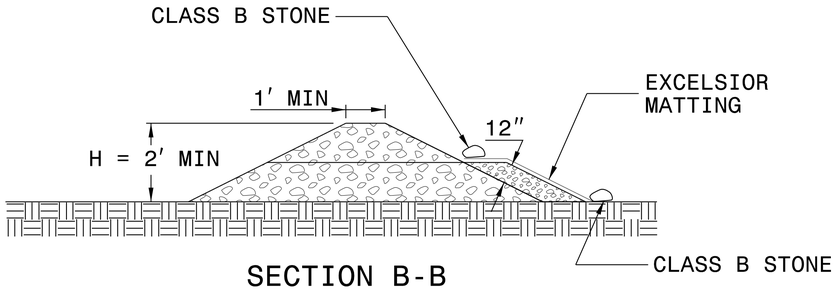

SECTION B-B

NOT TO SCALE

PROJECT REFERENCE NO.	SHEET NO.
17BP.8.R.132	EC-3
ROADWAY DESIGN ENGINEER	HYDRAULICS ENGINEER

DIVISION OF HIGHWAYS
STATE OF NORTH CAROLINA

SOIL STABILIZATION SUMMARY SHEET

MATTING FOR EROSION CONTROL

CONST SHEET NO.	LINE	FROM STATION	TO STATION	SIDE	ESTIMATE (SY)
SLOPES					
4	-L-	13+75	14+75	LT	190
4	-L-	14+00	15+00	RT	190
4	-L-	16+50	19+75	LT	390
4	-L-	16+50	19+50	RT	980
				SUBTOTAL	1750
MISCELLANEOUS MATTING TO BE INSTALLED AS DIRECTED BY THE ENGINEER					400
				TOTAL	2150
				SAY	2200

CONST SHEET NO.	LINE	FROM STATION	TO STATION	SIDE	ESTIMATE (SY)

PROJECT REFERENCE NO.	SHEET NO.
17BP.8.R.132	EC-3A
ROADWAY DESIGN ENGINEER	HYDRAULICS ENGINEER

DIVISION OF HIGHWAYS
STATE OF NORTH CAROLINA

SOIL STABILIZATION TIMEFRAMES

SITE DESCRIPTION	STABILIZATION TIME	TIMEFRAME EXCEPTIONS
PERIMETER DIKES, SWALES, DITCHES AND SLOPES	7 DAYS	NONE
HIGH QUALITY WATER (HQW) ZONES	7 DAYS	NONE
SLOPES STEEPER THAN 3:1	7 DAYS	IF SLOPES ARE 10' OR LESS IN LENGTH AND ARE NOT STEEPER THAN 2:1, 14 DAYS ARE ALLOWED.
SLOPES 3:1 OR FLATTER	14 DAYS	7 DAYS FOR SLOPES GREATER THAN 50' IN LENGTH.
ALL OTHER AREAS WITH SLOPES FLATTER THAN 4:1	14 DAYS	NONE, EXCEPT FOR PERIMETERS AND HQW ZONES.

NOTE:
PLACE TEMPORARY ROCK SEDIMENT DAMS TYPE – B AND TEMPORARY ROCK SILT CHECKS TYPE – A AT DRAINAGE OUTLETS.

NOTE:
UTILIZE TEMPORARY SEDIMENT BASIN OR SPECIAL STILLING BASIN(S) AS STILLING BASIN WHERE APPLICABLE.

NOTES: ANY DEVIATION FROM OPTIONS GIVEN WILL REQUIRE PRIOR APPROVAL BY ENGINEER.

ADDITIONAL EROSION CONTROL DEVICES MAY NEED TO BE INSTALLED AS DIRECTED BY THE ENGINEER.

NOTE:
USE 1.0 FT WEIR HEIGHT FOR TEMPORARY ROCK SILT CHECKS TYPE – A THAT ARE NOT LABELED.

CLEARING AND GRUBBING
EROSION CONTROL FOR
CONSTRUCTION SHEET 4

CH ENGINEERING
3220 GLEN ROYAL RD. RALEIGH, NC 27617
TELE 919.788.0224 FAX 919.788.0232
NC LICENSE #P-0189

Kimley»Horn ©2019
421 FAYETTEVILLE STREET, SUITE 600
RALEIGH, NC 27601

PROJECT REFERENCE NO.	SHEET NO.
17BP.8.R.132	EC-4/CONST.4
RANDOLPH COUNTY BRIDGE #352	
ROADWAY DESIGN ENGINEER	HYDRAULICS ENGINEER

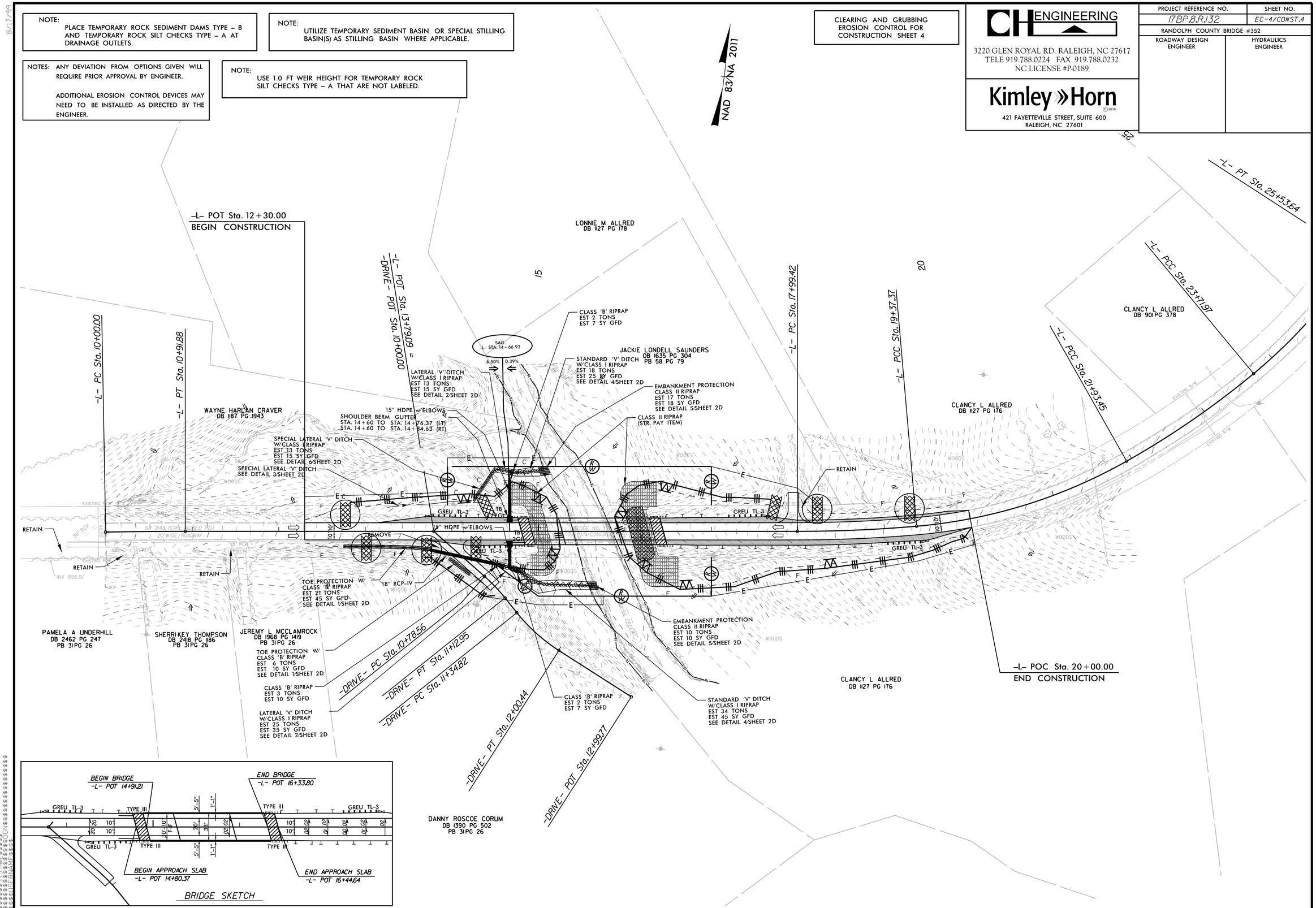

8/17/99

NOTE:
UTILIZE TEMPORARY SEDIMENT BASIN OR SPECIAL STILLING BASIN(S) AS STILLING BASIN WHERE APPLICABLE.

NOTE:
USE 1.0 FT WEIR HEIGHT FOR TEMPORARY ROCK SILT CHECKS TYPE – A THAT ARE NOT LABELED.

NOTES: ANY DEVIATION FROM OPTIONS GIVEN WILL REQUIRE PRIOR APPROVAL BY ENGINEER.

ADDITIONAL EROSION CONTROL DEVICES MAY NEED TO BE INSTALLED AS DIRECTED BY THE ENGINEER.

FINAL
EROSION CONTROL FOR
CONSTRUCTION SHEET 4

CH ENGINEERING
3220 GLEN ROYAL RD. RALEIGH, NC 27617
TELE 919.788.0224 FAX 919.788.0232
NC LICENSE #P-0189

Kimley»Horn ©2019
421 FAYETTEVILLE STREET, SUITE 600
RALEIGH, NC 27601

PROJECT REFERENCE NO.	SHEET NO.
17BP.8.R.132	EC-5/CONST.4
RANDOLPH COUNTY BRIDGE #352	
ROADWAY DESIGN ENGINEER	HYDRAULICS ENGINEER

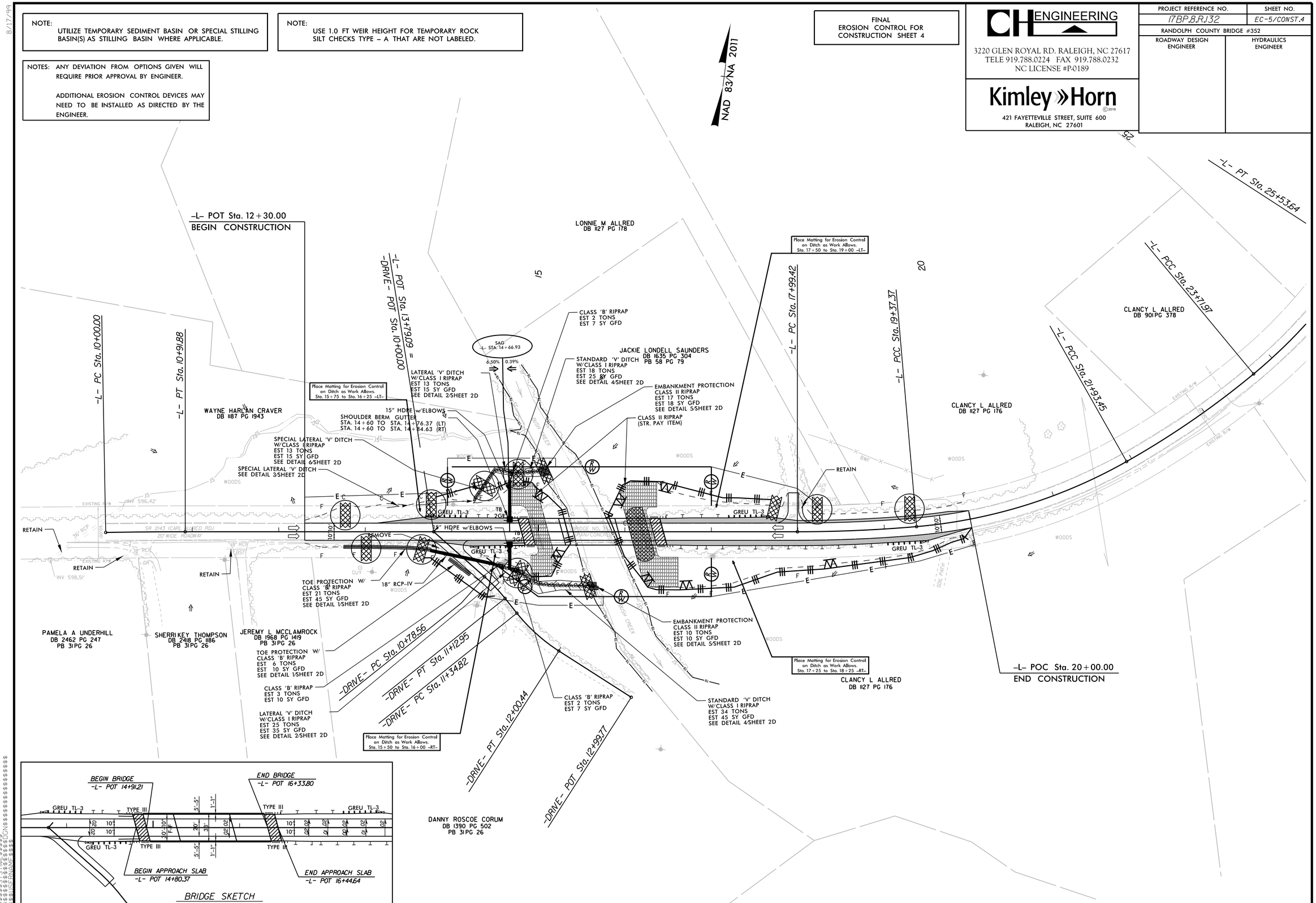

PROJECT: 17BP.8.R.132

T.I.P. NO.	SHEET NO.
17BP.8.R.132	UO–1

NOTE:
ALL UTILITY WORK SHOWN ON THIS SHEET WILL BE DONE BY OTHERS. NO PAYMENT WILL BE MADE TO THE CONTRACTOR FOR UTILITY WORK SHOWN ON THIS SHEET.

STATE OF NORTH CAROLINA
DIVISION OF HIGHWAYS

UTILITIES BY OTHERS PLANS
RANDOLPH COUNTY

LOCATION: BRIDGE 352 OVER BRUSH CREEK ON SR 2143 (CARL ALLRED ROAD)

TYPE OF WORK: POWER AND COMMUNICATIONS RELOCATION

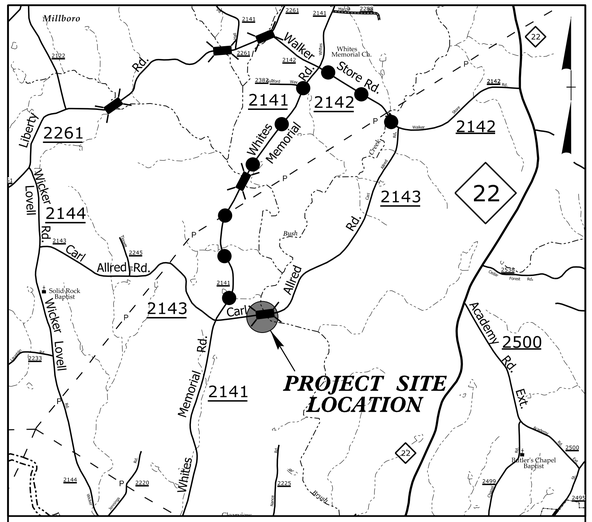

VICINITY MAP

●●●● OFF-SITE DETOUR ROUTE

N.T.S.

UO–2
RDY–04

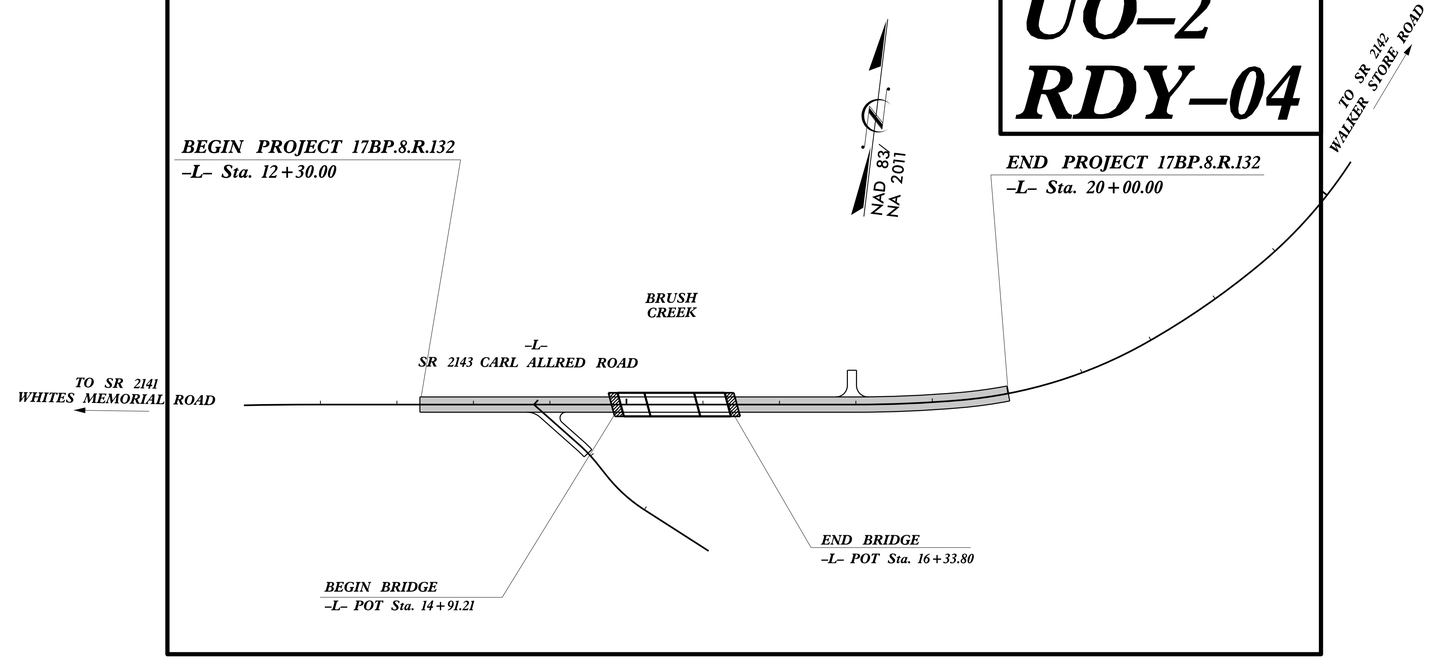

GRAPHIC SCALES

50 25 0 50 100
PLANS

50 25 0 50 100
PROFILE (HORIZONTAL)

10 5 0 10 20
PROFILE (VERTICAL)

INDEX OF SHEETS

SHEET NO.:	DESCRIPTION:
UO–1	TITLE SHEET
UO–2	UBO PLAN SHEET

UTILITY OWNERS WITH CONFLICTS

(A) POWER – REMC
(B) COMMUNICATIONS – CENTURYLINK
(C) COMMUNICATIONS – SPECTRUM

PREPARED IN THE OFFICE OF:
CH ENGINEERING
3220 GLEN ROYAL RD. RALEIGH, NC 27617
TELE 919.788.0224 FAX 919.788.0232
NC LICENSE #P-0189

UTILITIES PROJECT ENGINEER
Mary Jo Lee, P.E.

DIVISION OF HIGHWAYS
DIVISION 8
121 DOT DRIVE
CARTHAGE, NC 28327

JAMIE YOW	DIVISION CONTACT #1
TRAVIS MORGAN, PE	DIVISION CONTACT #2
TIM WELCH, PE	DIVISION CONTACT #3
	DIVISION CONTACT #4

09/08/99
2/28/2020
R:\Utilities\Engineering\UBO\Proj\Rand352_ut_tsh_U001_psh.dgn
USERNAME

PROJECT REFERENCE NO.	SHEET NO.
17BP.8.R.132	U0-2
THIS SHEET CORRESPONDS TO RDY- 04	

UTILITIES BY OTHERS

ALL PROPOSED UTILITY WORK SHOWN ON THIS SHEET WILL BE DONE BY OTHERS. NO PAYMENT WILL BE MADE TO THE CONTRACTOR FOR PROPOSED UTILITY WORK SHOWN ON THIS SHEET.

NAD 83/NA 2011

-L-

PI Sta 10+45.94	PI Sta 18+68.44	PI Sta 20+67.40	PI Sta 22+82.95	PI Sta 24+63.51
△ = 1° 03' 10.3" (RT)	△ = 4° 56' 23.5" (LT)	△ = 24° 32' 52.9" (LT)	△ = 10° 11' 08.0" (LT)	△ = 17° 20' 51.6" (LT)
D = 1° 08' 45.3"	D = 3° 34' 51.6"	D = 9° 35' 10.3"	D = 5° 42' 19.3"	D = 9° 32' 57.5"
L = 91.88'	L = 137.95'	L = 256.08'	L = 178.53'	L = 181.66'
T = 45.94'	T = 69.02'	T = 130.03'	T = 89.50'	T = 91.53'
R = 5,000.00'	R = 1,600.00'	R = 597.69'	R = 1,004.24'	R = 600.00'

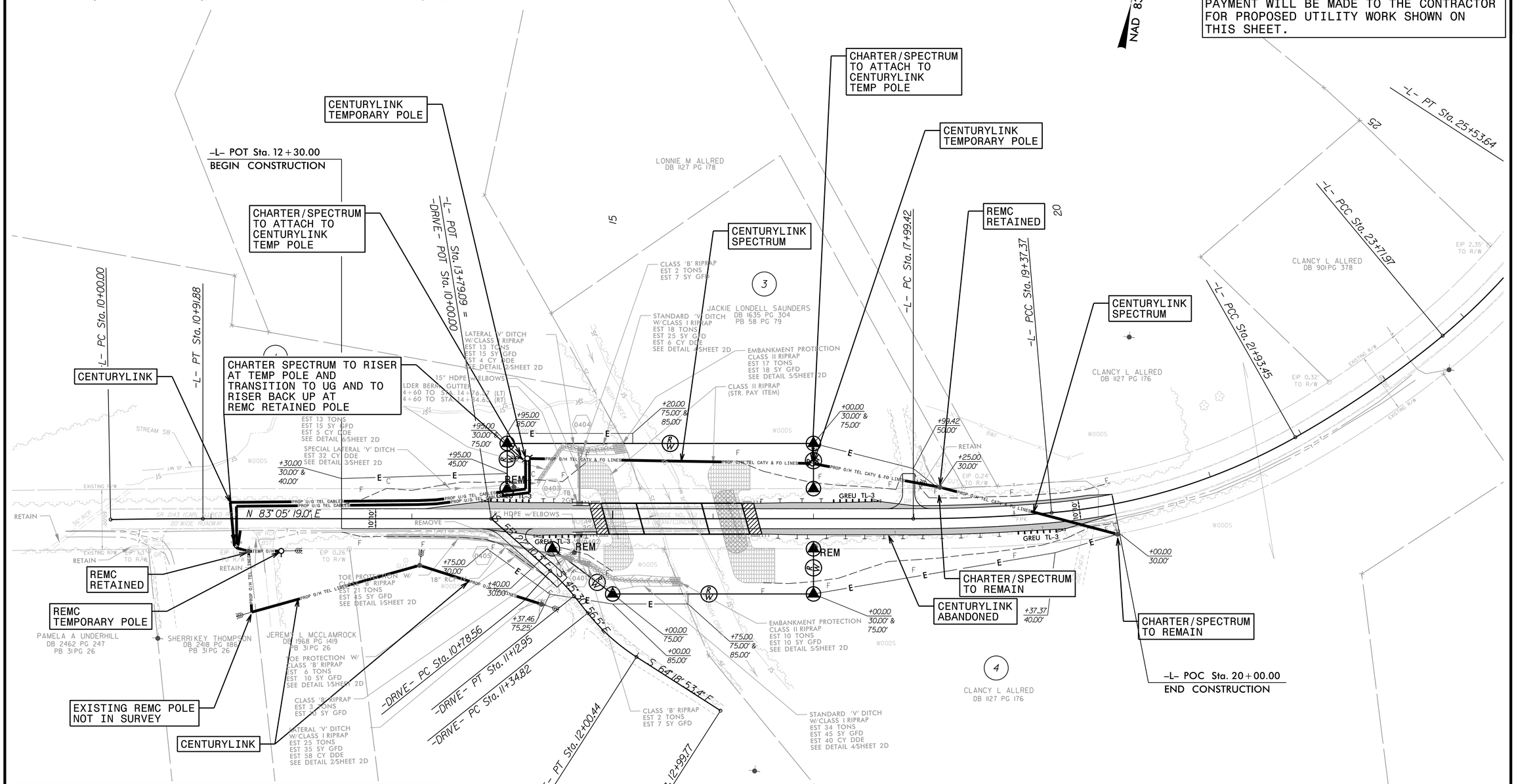

-DRIVE-

PI Sta 10+95.80	PI Sta 11+67.93
△ = 9° 51' 13.8" (RT)	△ = 18° 47' 56.9" (LT)
D = 28° 38' 52.4"	D = 28° 38' 52.4"
L = 34.40'	L = 65.62'
T = 17.24'	T = 33.11'
R = 200.00'	R = 200.00'

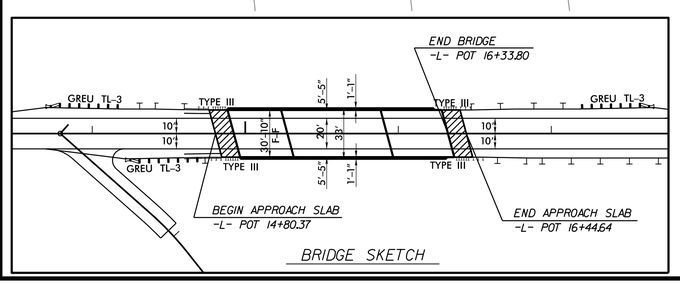

BRIDGE SKETCH

CH ENGINEERING
3220 GLEN ROYAL RD. RALEIGH, NC 27617
TELE 919.788.0224 FAX 919.788.0232
NC LICENSE #P-0189

5/14/99
2/28/2020
R:\Utilities\Engineering\UB0\Proj\Rand352_ut_rdy4_U002_psh.dgn

6/23/16

0 2.5 5	PROJ. REFERENCE NO.	SHEET NO.
	17BP.8.R.132	X-1

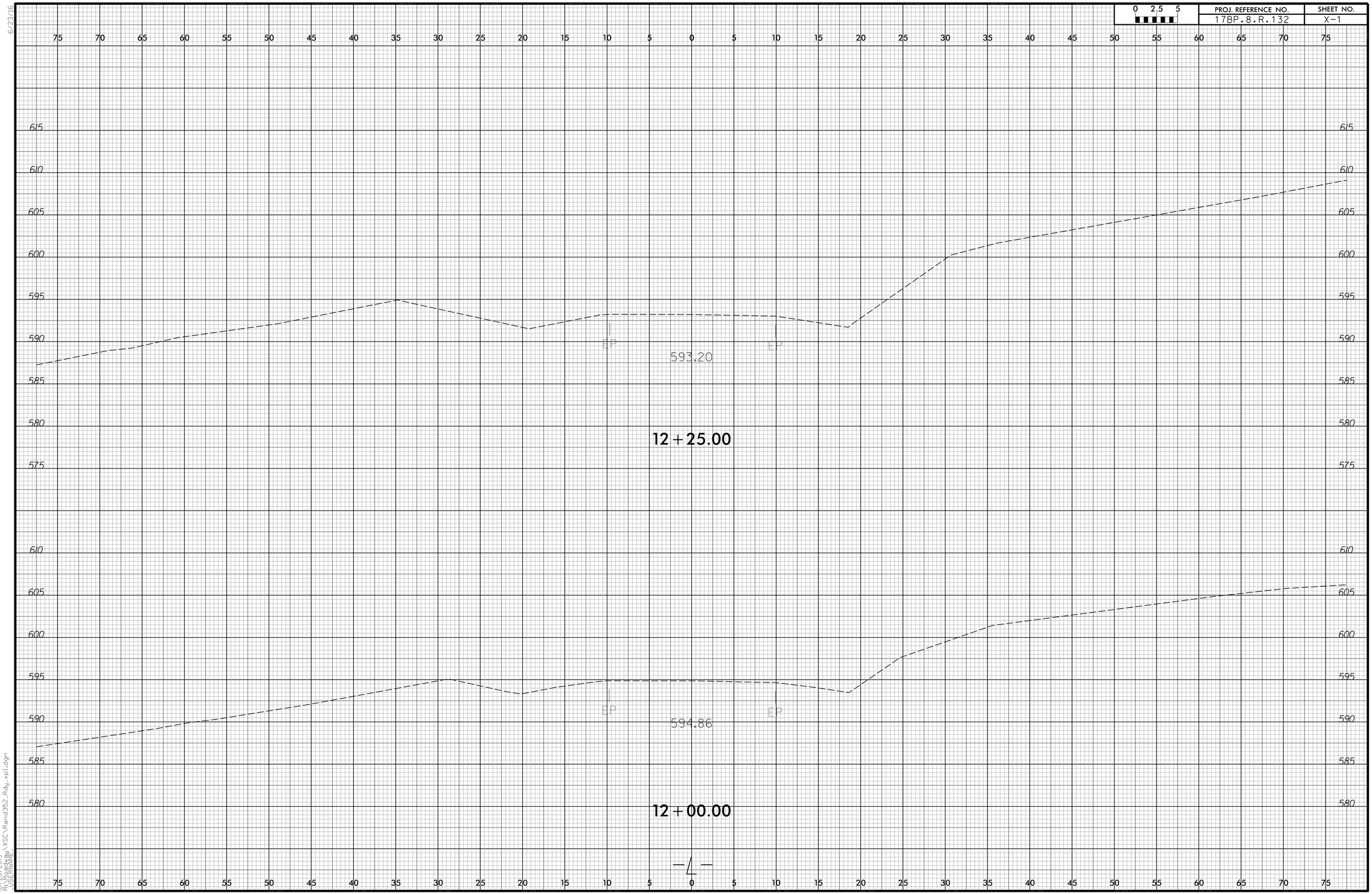

10/28/2019
R:\CADD\Rdwy\VSC\Rand352_Rdy_xp1.dgn
USERNAME

6/23/16

0 2.5 5	PROJ. REFERENCE NO.	SHEET NO.
	17BP.8.R.132	X-2

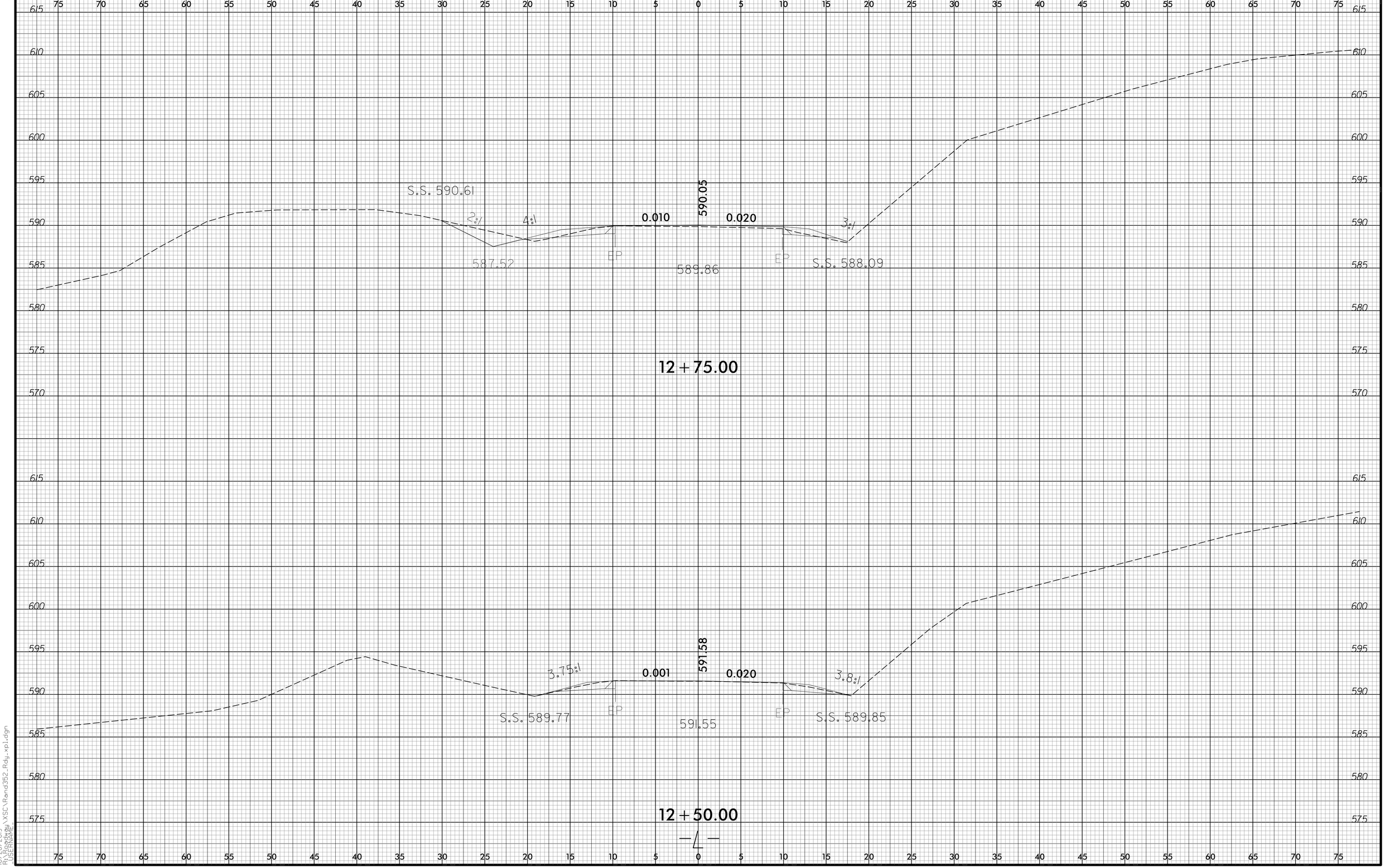

10/28/2019
R:\CADD\Rad VSC\Rand352_Rdy_xp1.dgn
TASERNAL

6/23/16

0 2.5 5	PROJ. REFERENCE NO.	SHEET NO.
	17BP.8.R.132	X-3

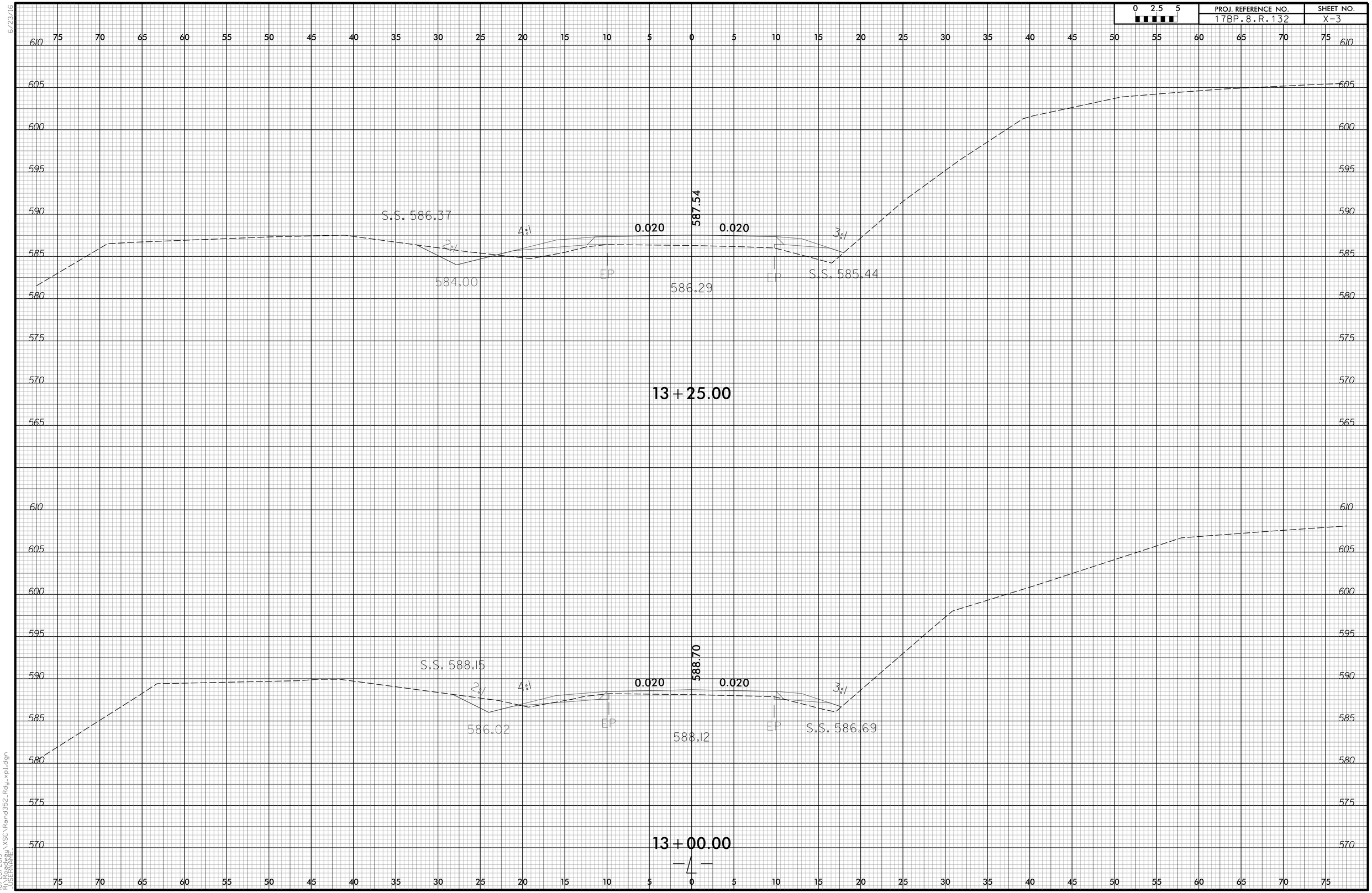

10/28/2019
R:\Roadway\Projects\VSC\Rand352_Rdy_xp1.dgn
USERNAME = VSCAPPS

6/23/16

0 2.5 5	PROJ. REFERENCE NO.	SHEET NO.
	17BP.8.R.132	X-4

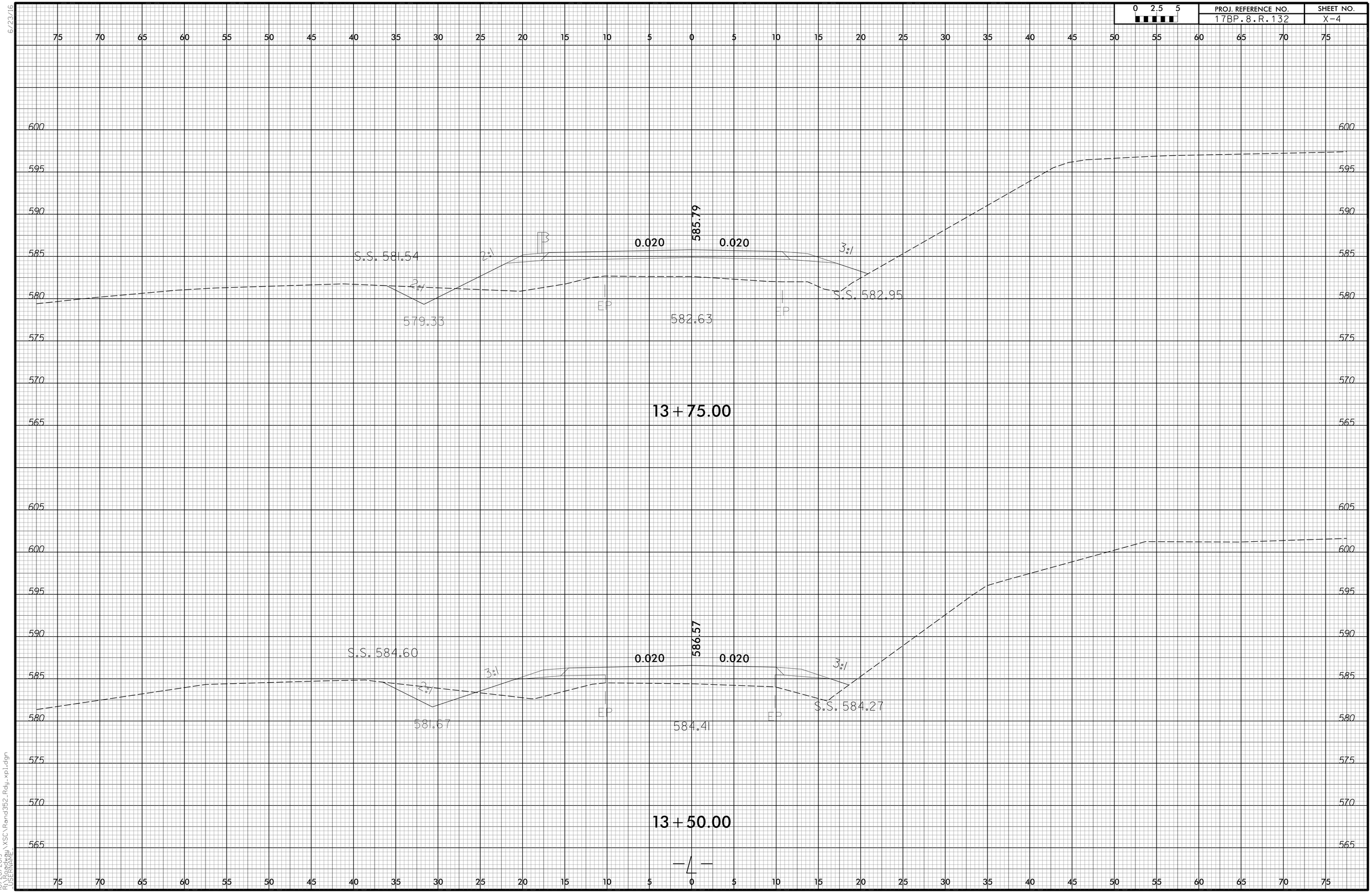

10/28/2019
R:\Roadway\Models\VSC\Rand352_Rdy_xp1.dgn
USERNAME = sgrimes

0 2.5 5	PROJ. REFERENCE NO.	SHEET NO.
	17BP.8.R.132	X-5

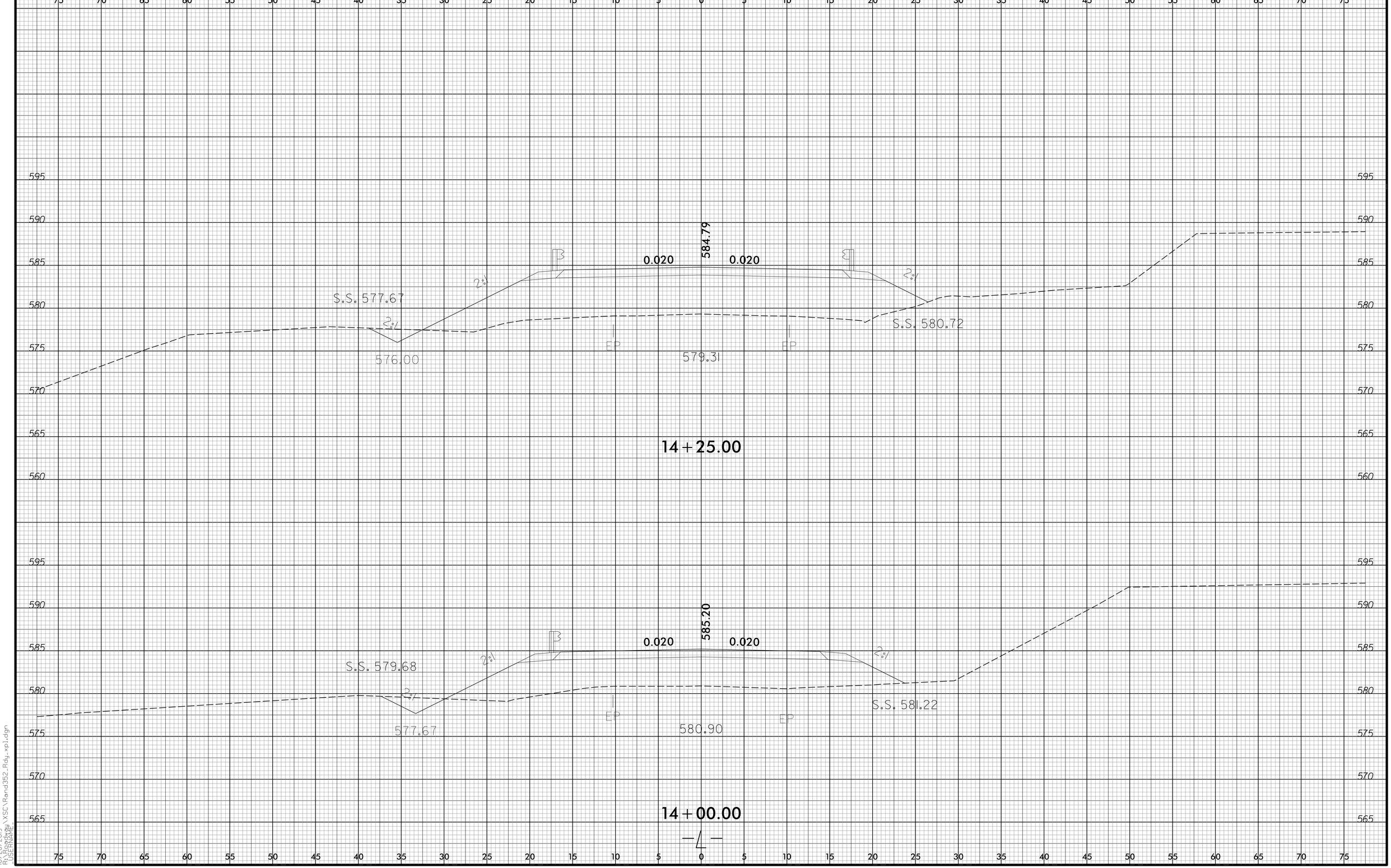

6/23/16

10/28/2019
R:\Roadway\Models\VSC\Rand352_Rdy_xp1.dgn
TASERNAME

6/23/16

0 2.5 5	PROJ. REFERENCE NO.	SHEET NO.
	17BP.8.R.132	X-6

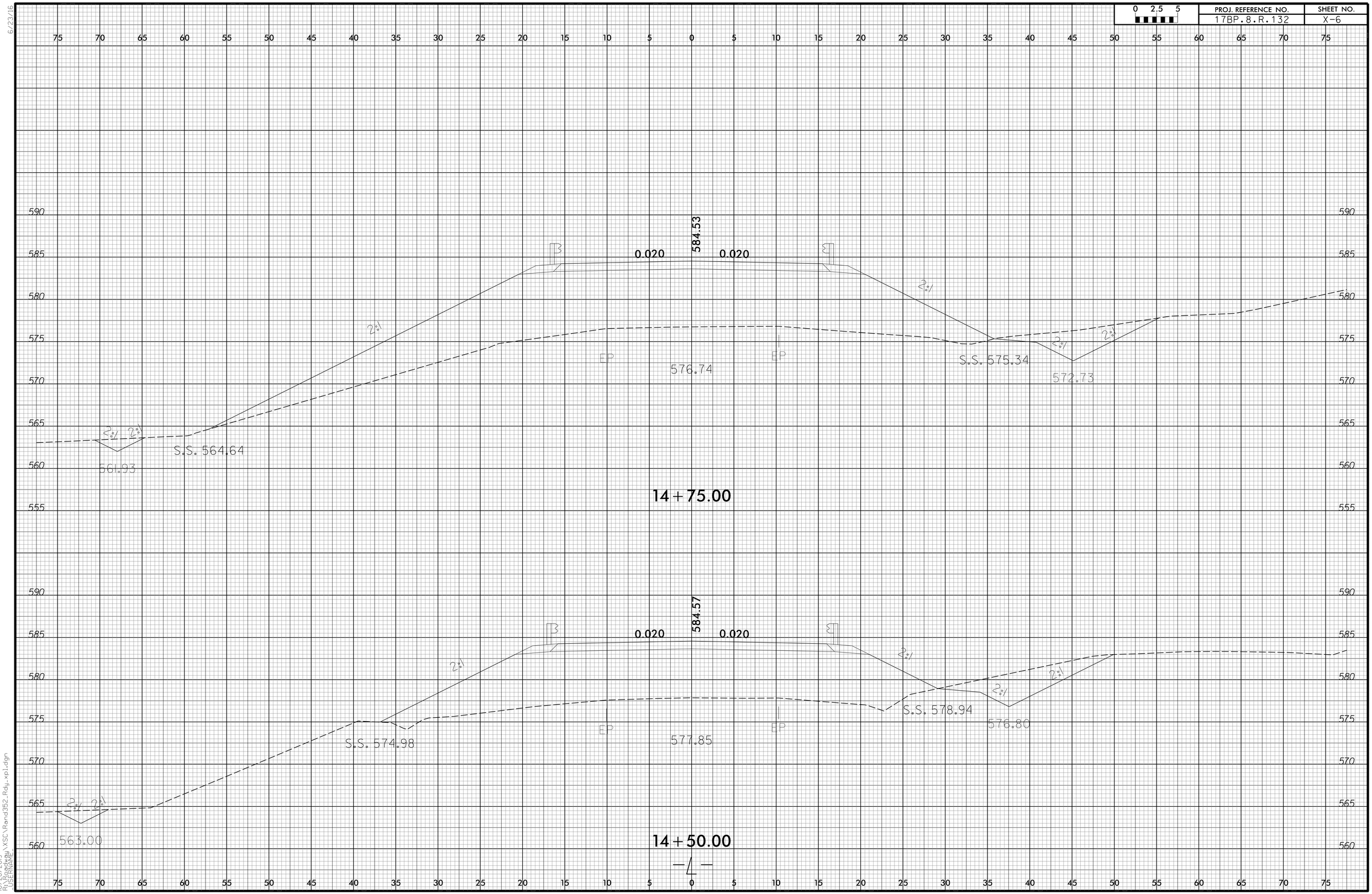

10/28/2019
R:\SERRA\Rd\VSC\Rand352_Rdy_xp1.dgn

0 2.5 5	PROJ. REFERENCE NO.	SHEET NO.
	17BP.8.R.132	X-7

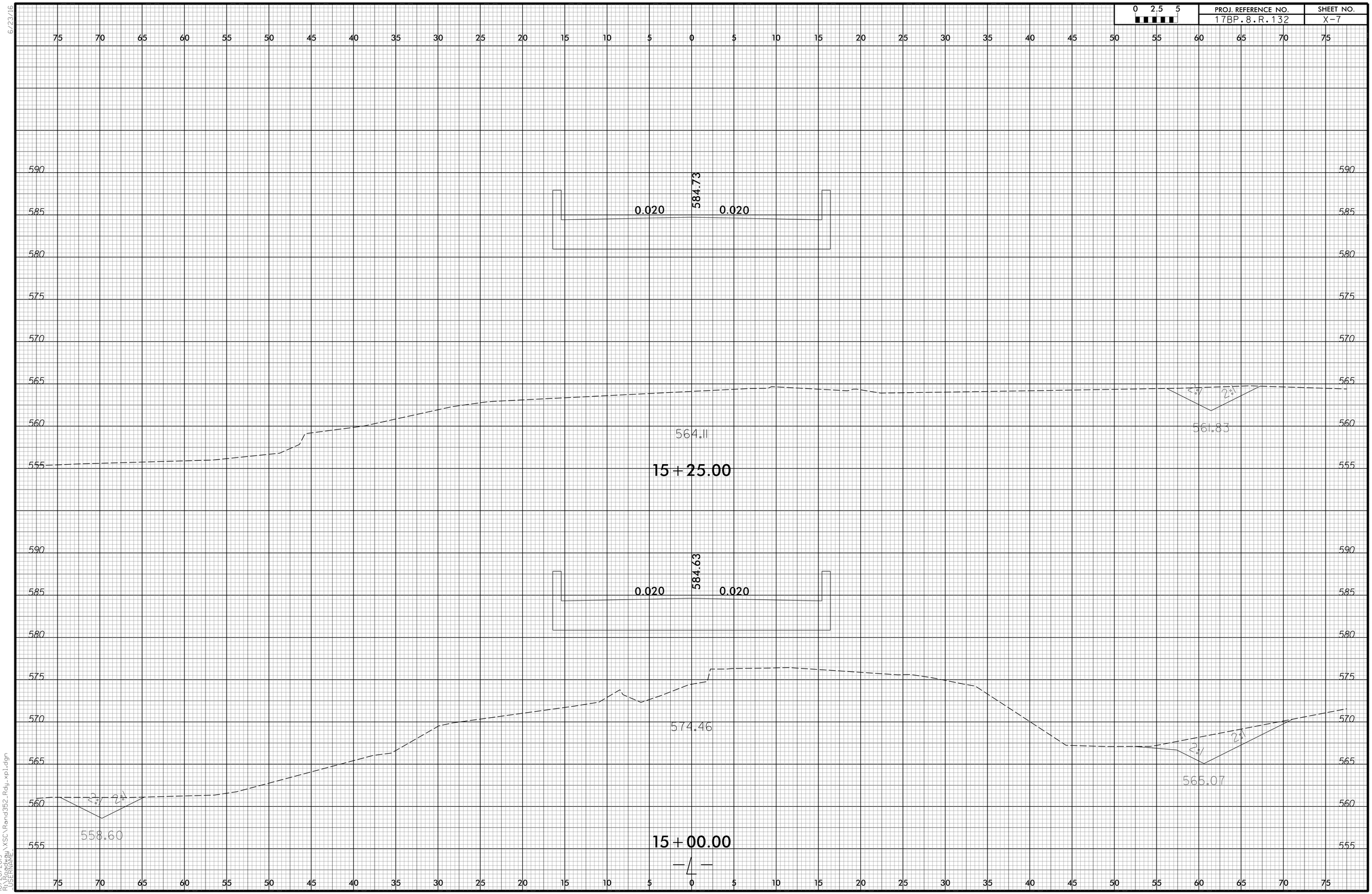

6/23/16

10/28/2019
R:\Roadway\Active\USER\mwalz\XSC\Rand352_Rdy_xp1.dgn

6/23/16

0 2.5 5	PROJ. REFERENCE NO.	SHEET NO.
	17BP.8.R.132	X-8

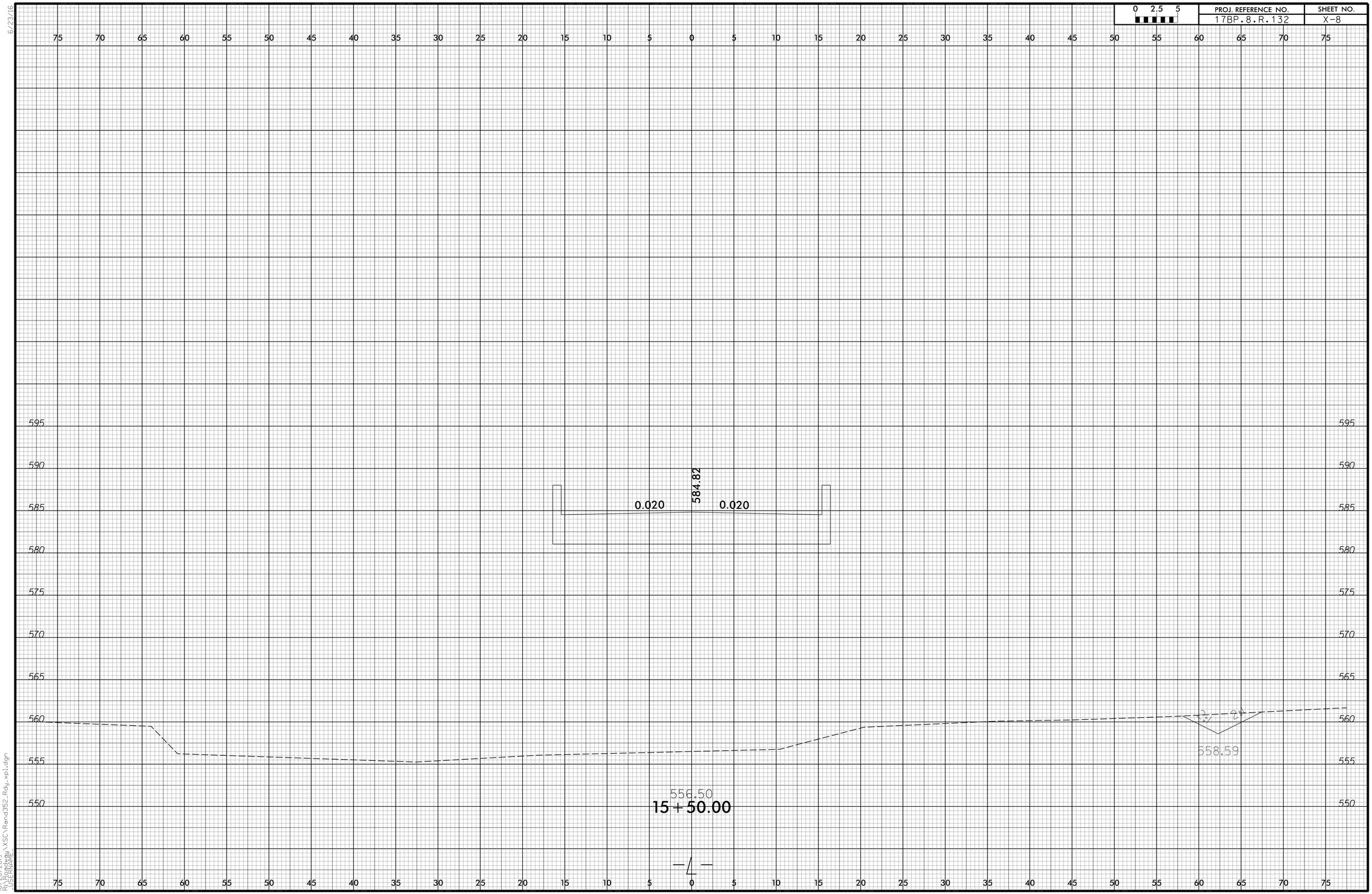

10/28/2019
R:\SERRANO\Rand352\VSC\Rand352_Rdy_xp1.dgn

6/23/16

0 2.5 5	PROJ. REFERENCE NO.	SHEET NO.
	17BP.8.R.132	X-9

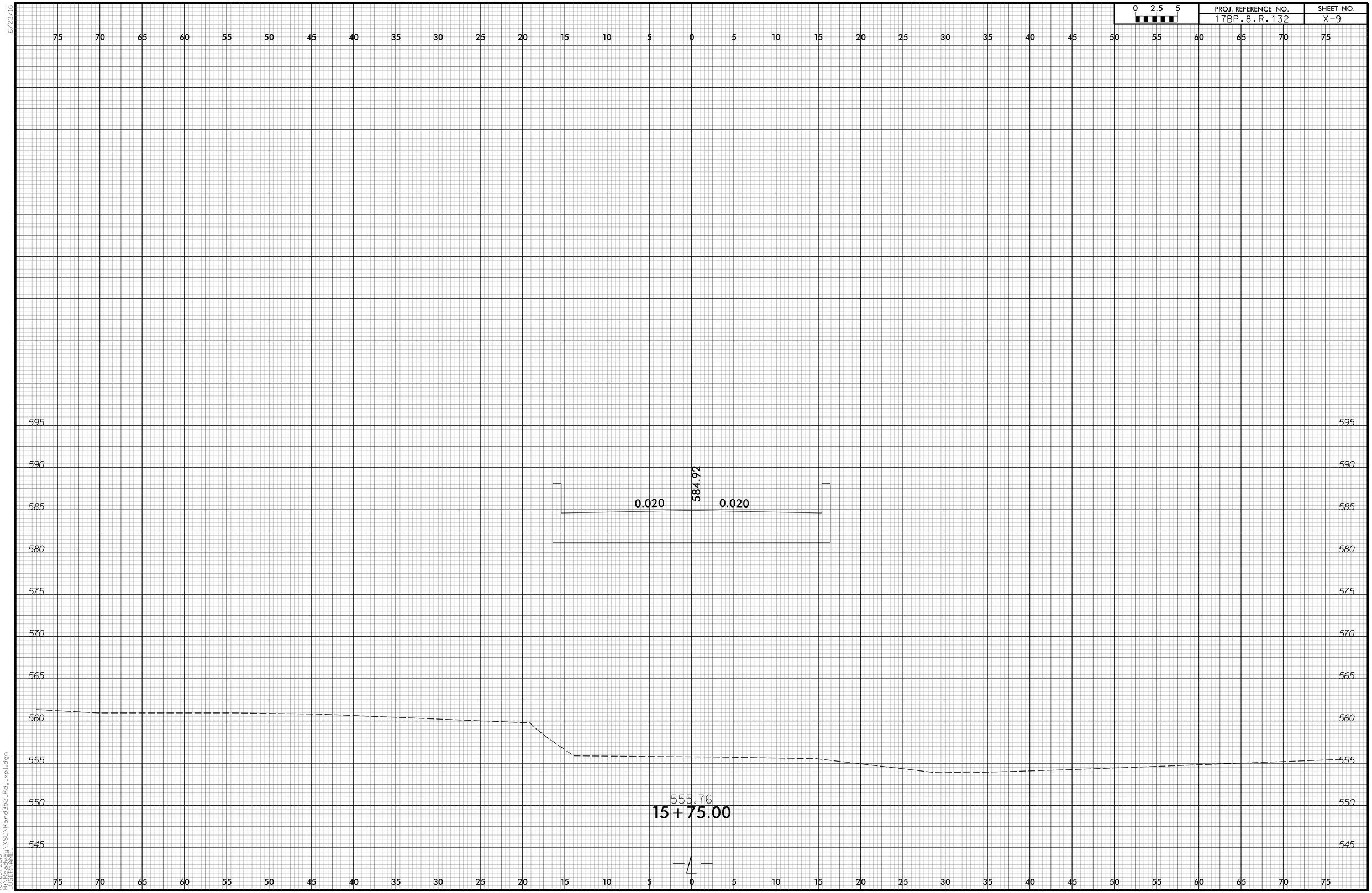

10/28/2019
R:\Projects\Rand352\Rand352_Rdy_xp1.dgn
USERNAME = VSC

6/23/16

0 2.5 5	PROJ. REFERENCE NO.	SHEET NO.
	17BP.8.R.132	X-10

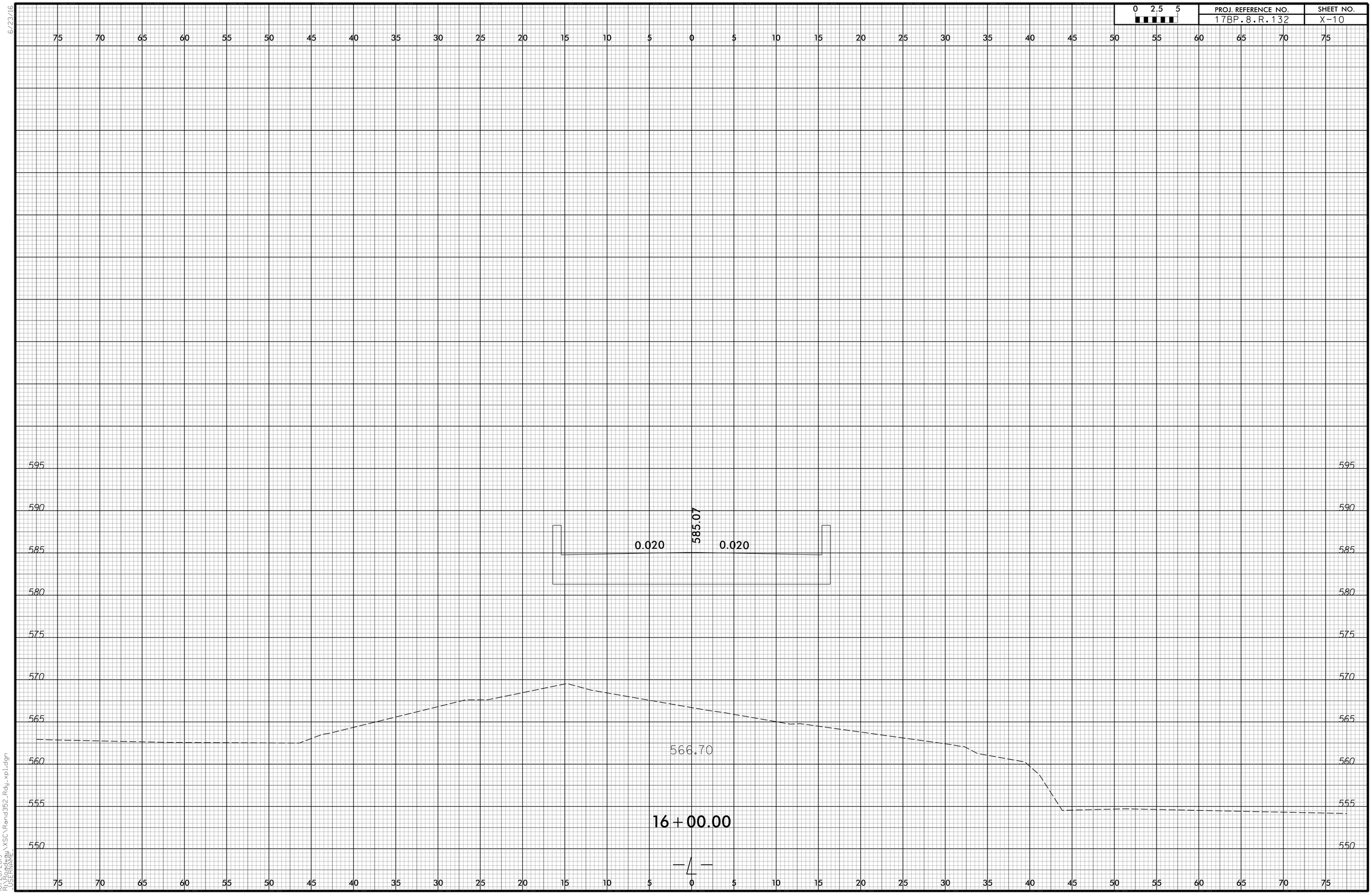

10/28/2019
R:\Projects\Rail\VSC\Rand352_Rdy_xp1.dgn
USERNAME

6/23/16

0 2.5 5	PROJ. REFERENCE NO.	SHEET NO.
	17BP.8.R.132	X-11

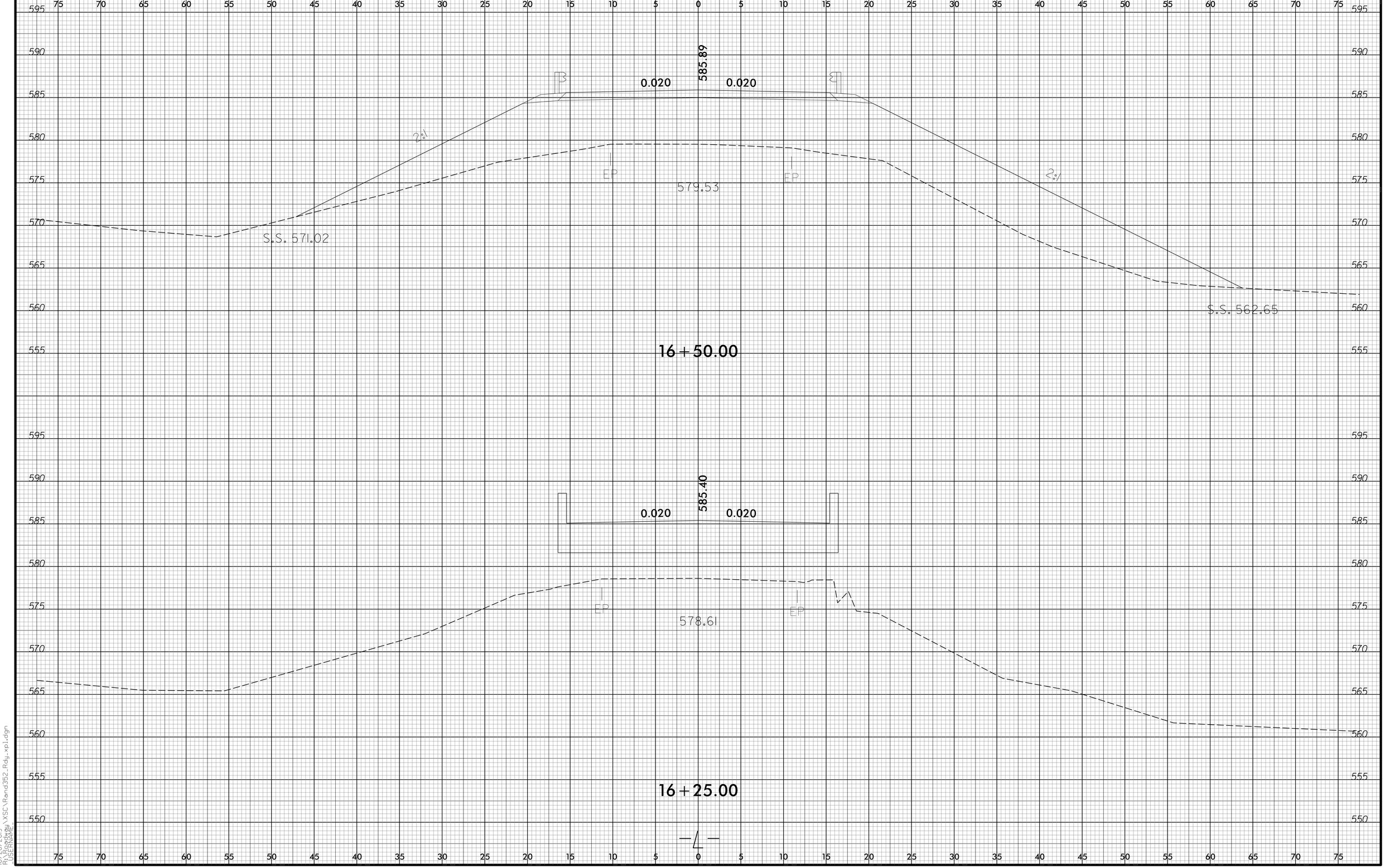

10/28/2019
R:\Roadway\Active\WSC\Rand352_Rdy_xp1.dgn
USER: mwalk

0 2.5 5	PROJ. REFERENCE NO.	SHEET NO.
	17BP.8.R.132	X-12

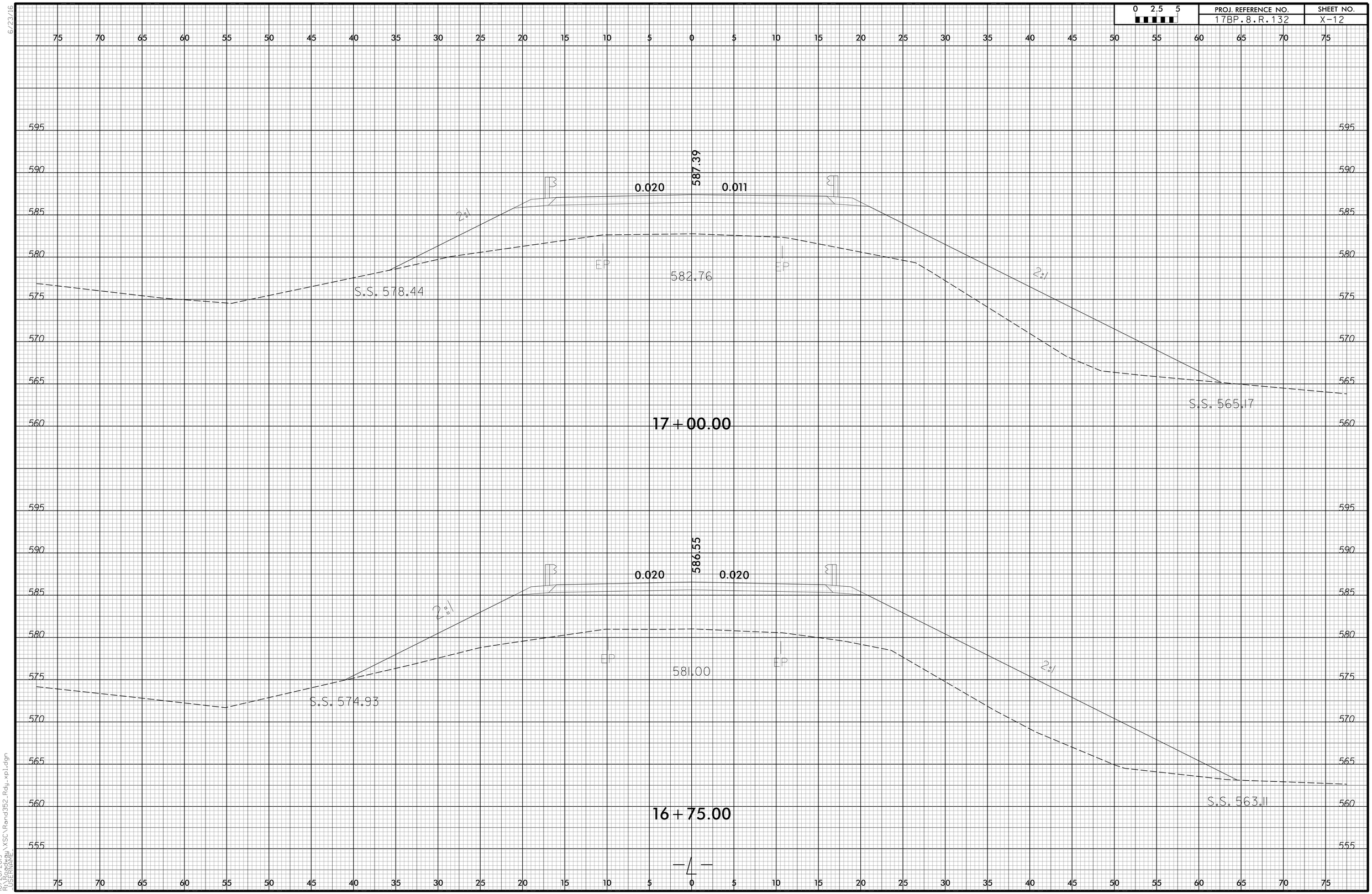

6/23/16

10/28/2019
R:\Roadway\Active\WSC\Rand352_Rdy_xp1.dgn
USERNAME = sgrimm

6/23/16

0 2.5 5	PROJ. REFERENCE NO.	SHEET NO.
	17BP.8.R.132	X-13

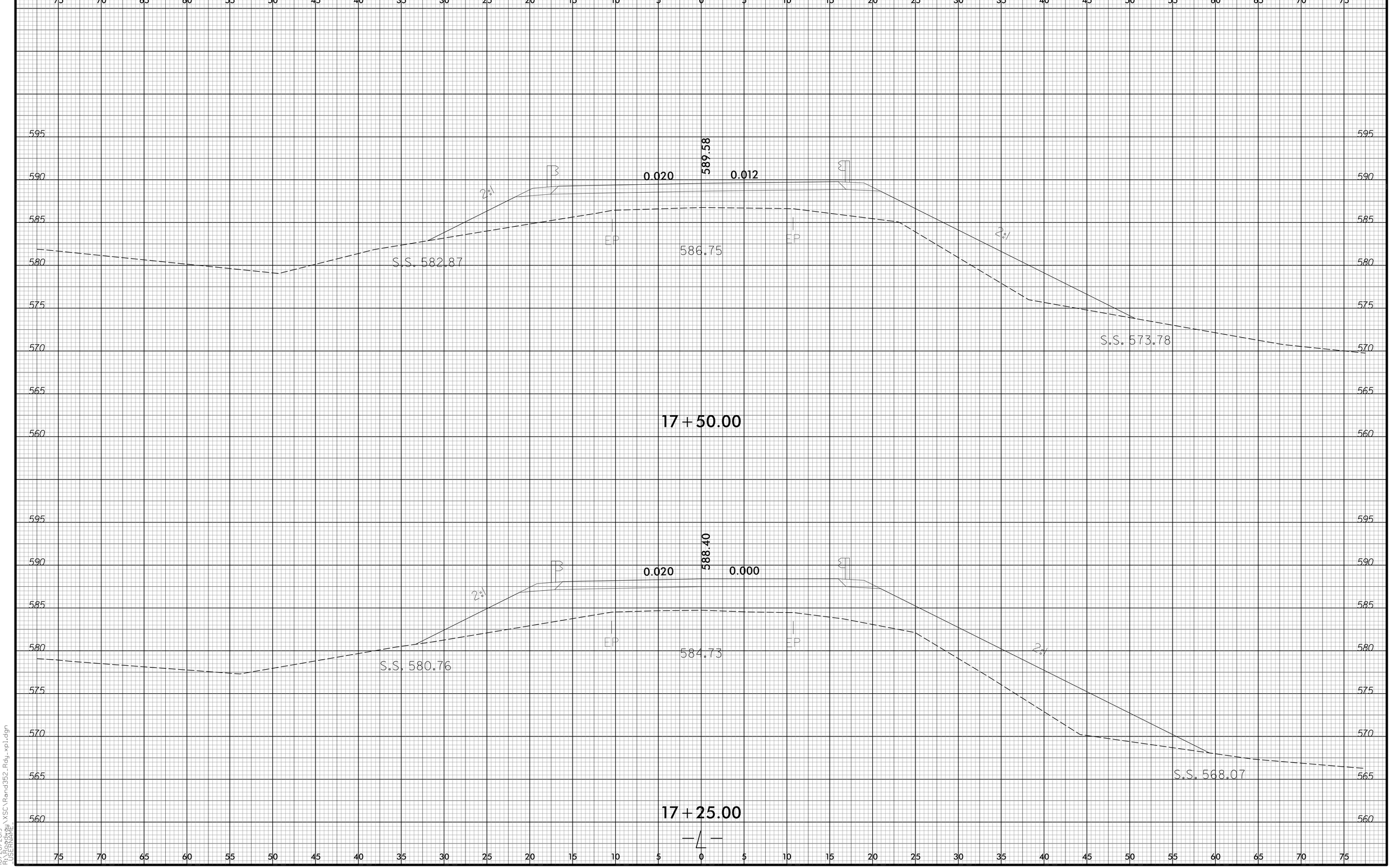

10/28/2019
R:\Roadway\Active\WSC\Rand352_Rdy_xp1.dgn
USER: mwalsh

6/23/16

0 2.5 5	PROJ. REFERENCE NO.	SHEET NO.
	17BP.8.R.132	X-14

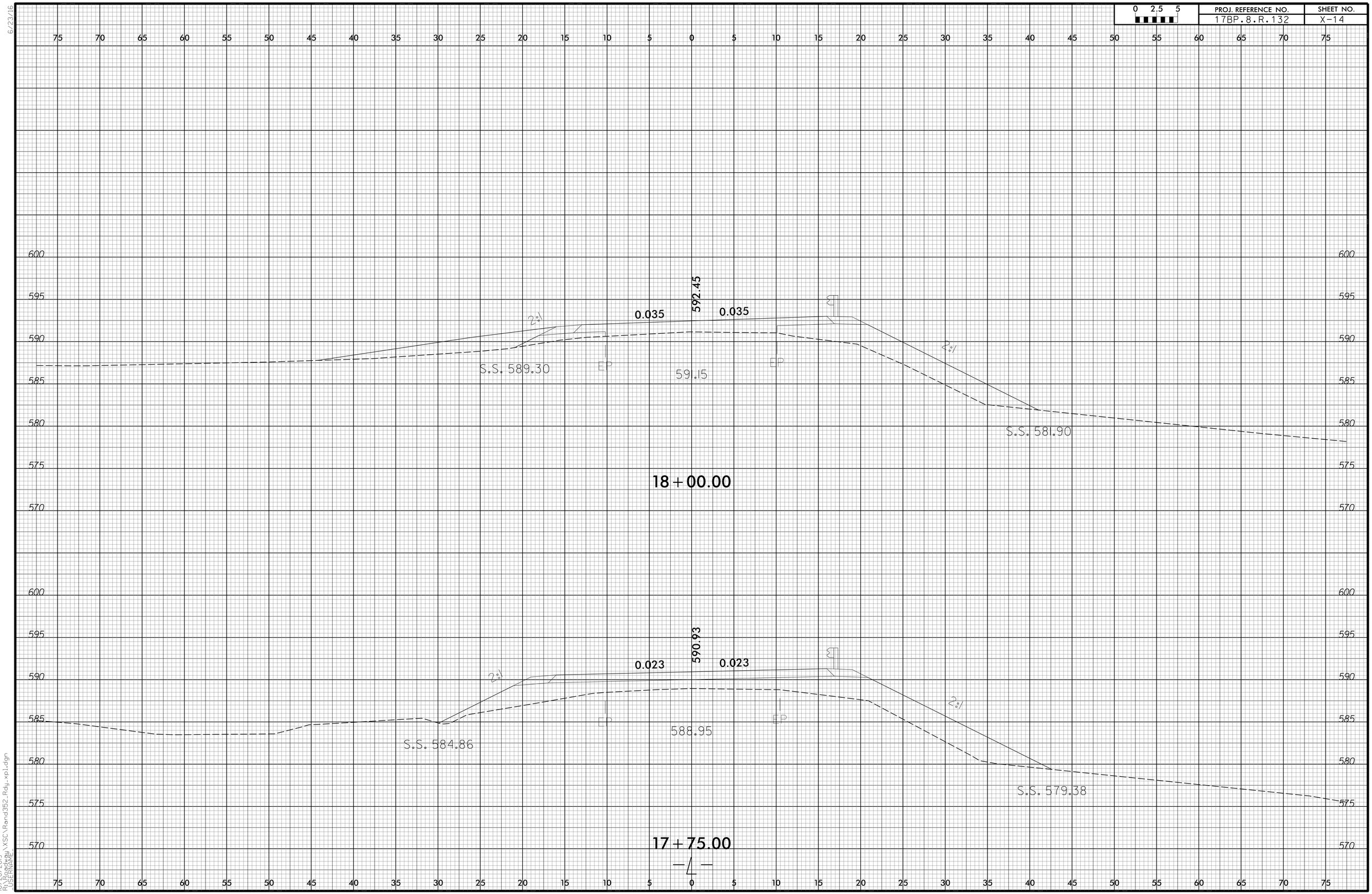

10/28/2019
R:\Projects\Rand352\VSC\Rand352_Rdy_xp1.dgn
TASERNAL

0 2.5 5	PROJ. REFERENCE NO.	SHEET NO.
	17BP.8.R.132	X-15

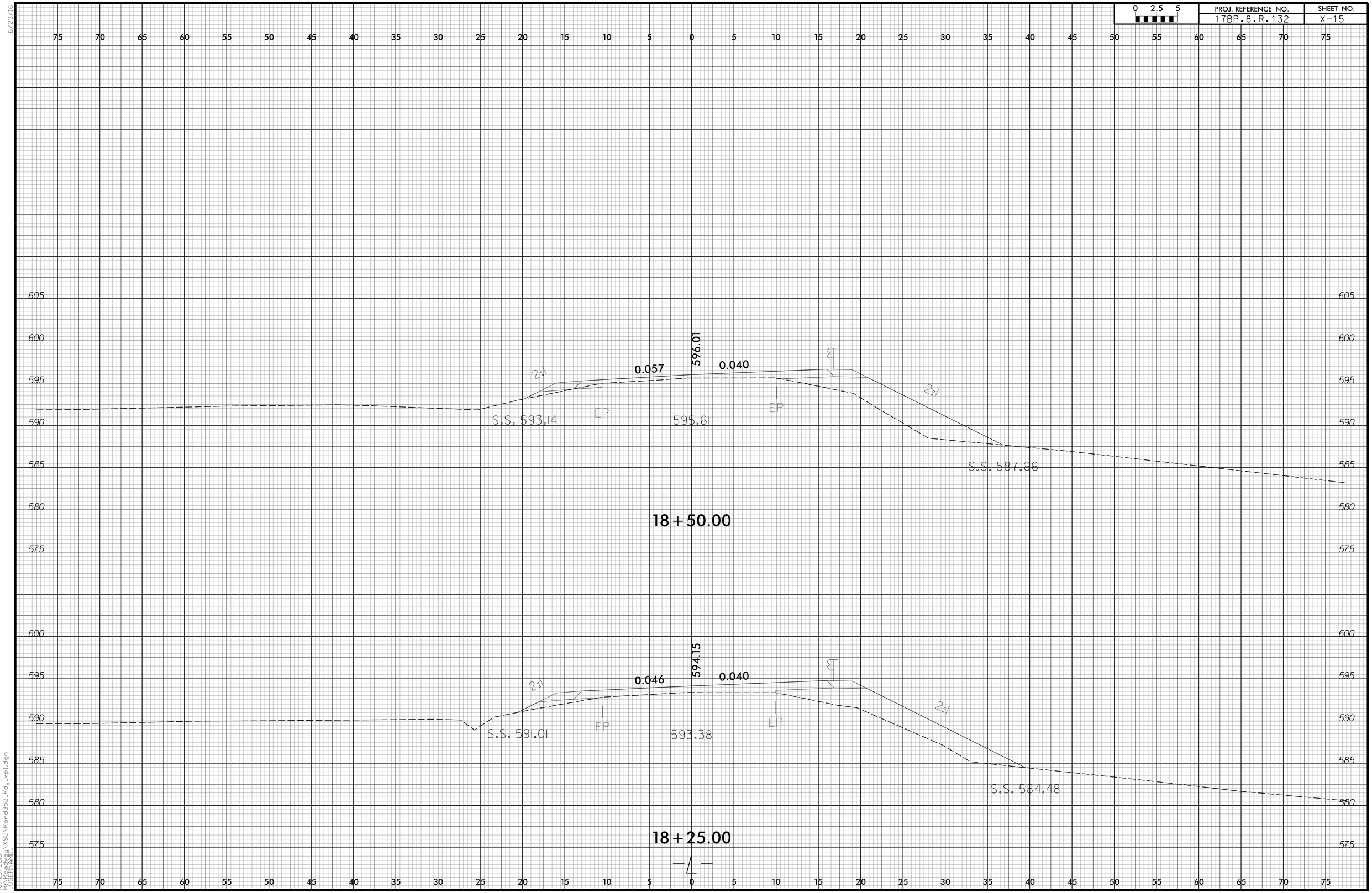

6/23/16

10/28/2019
RDWAY
USERNAME
\XSC\Rand352_Rdy_xp1.dgn

6/23/16

0 2.5 5	PROJ. REFERENCE NO.	SHEET NO.
	17BP.8.R.132	X-16

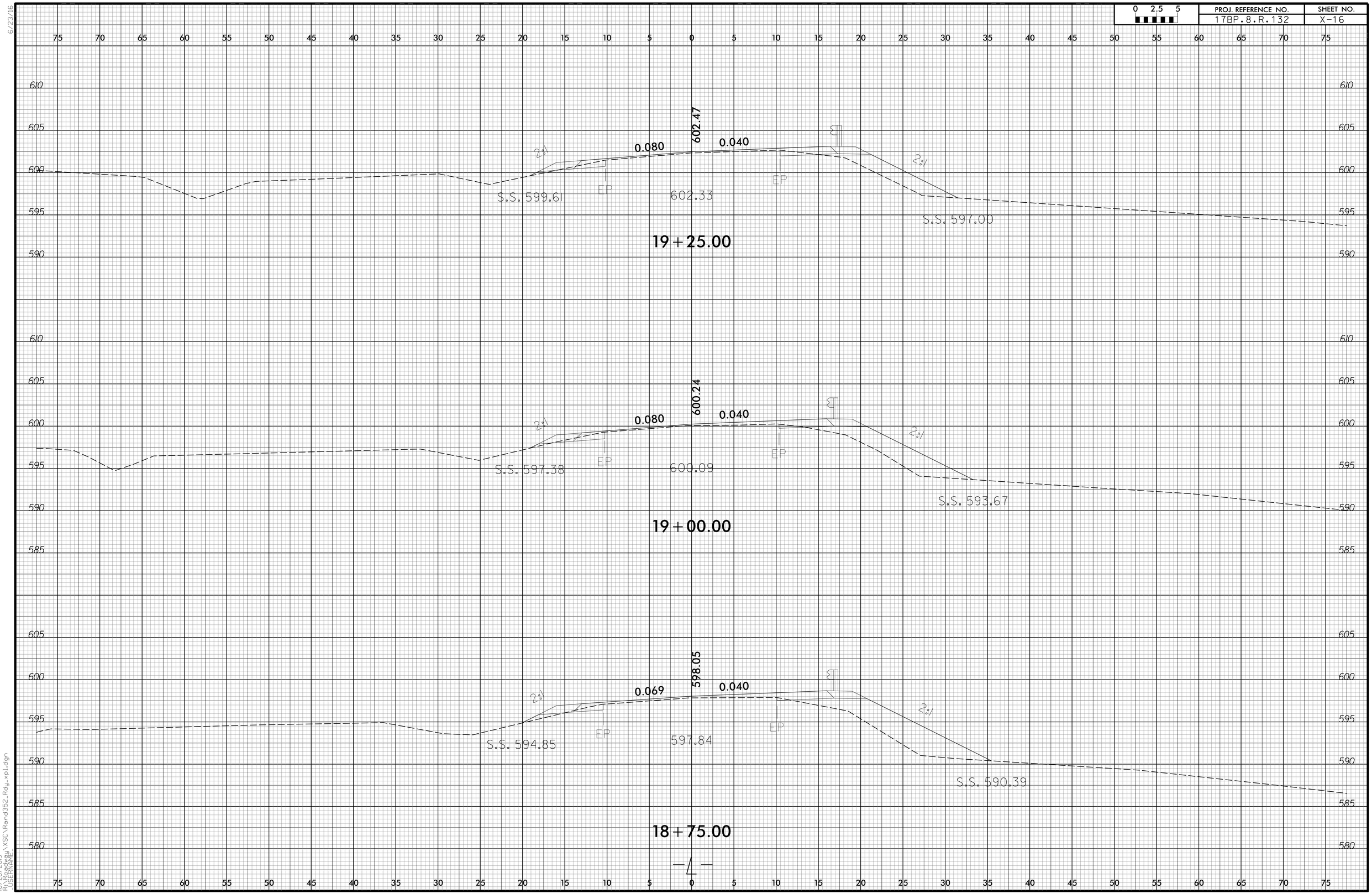

10/28/2019
R:\SEPRAM\
PW:\PRAM-PW\WSC\Rand352_Rdy_xpl.dgn

0 2.5 5	PROJ. REFERENCE NO.	SHEET NO.
	17BP.8.R.132	X-17

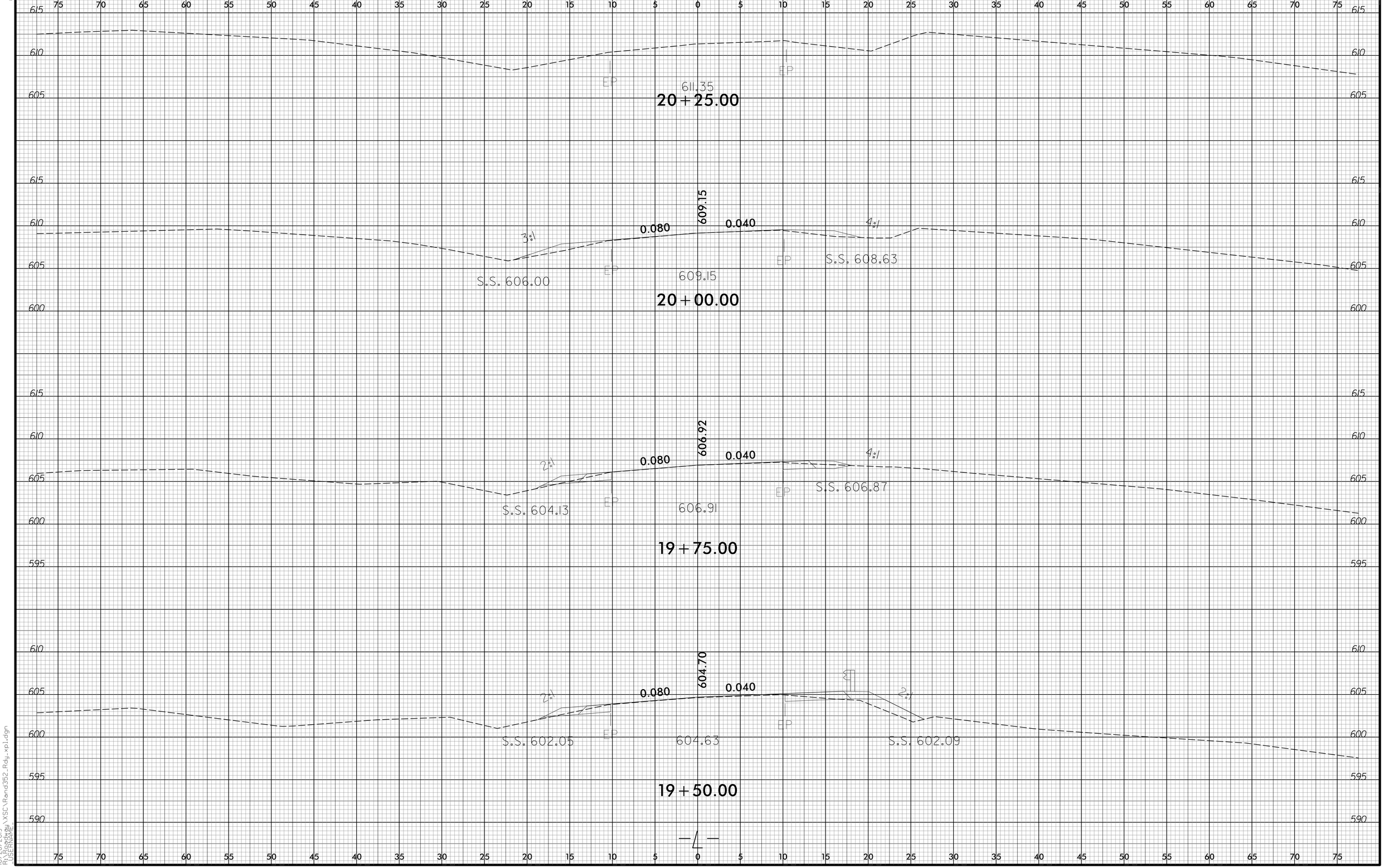

6/23/16

10/28/2019
RD_Rand352_Rdy_xp1.dgn
USERNAME \XSC\Rand352_Rdy_xp1.dgn

6/23/16

0 2.5 5	PROJ. REFERENCE NO.	SHEET NO.
	17BP.8.R.132	X-18

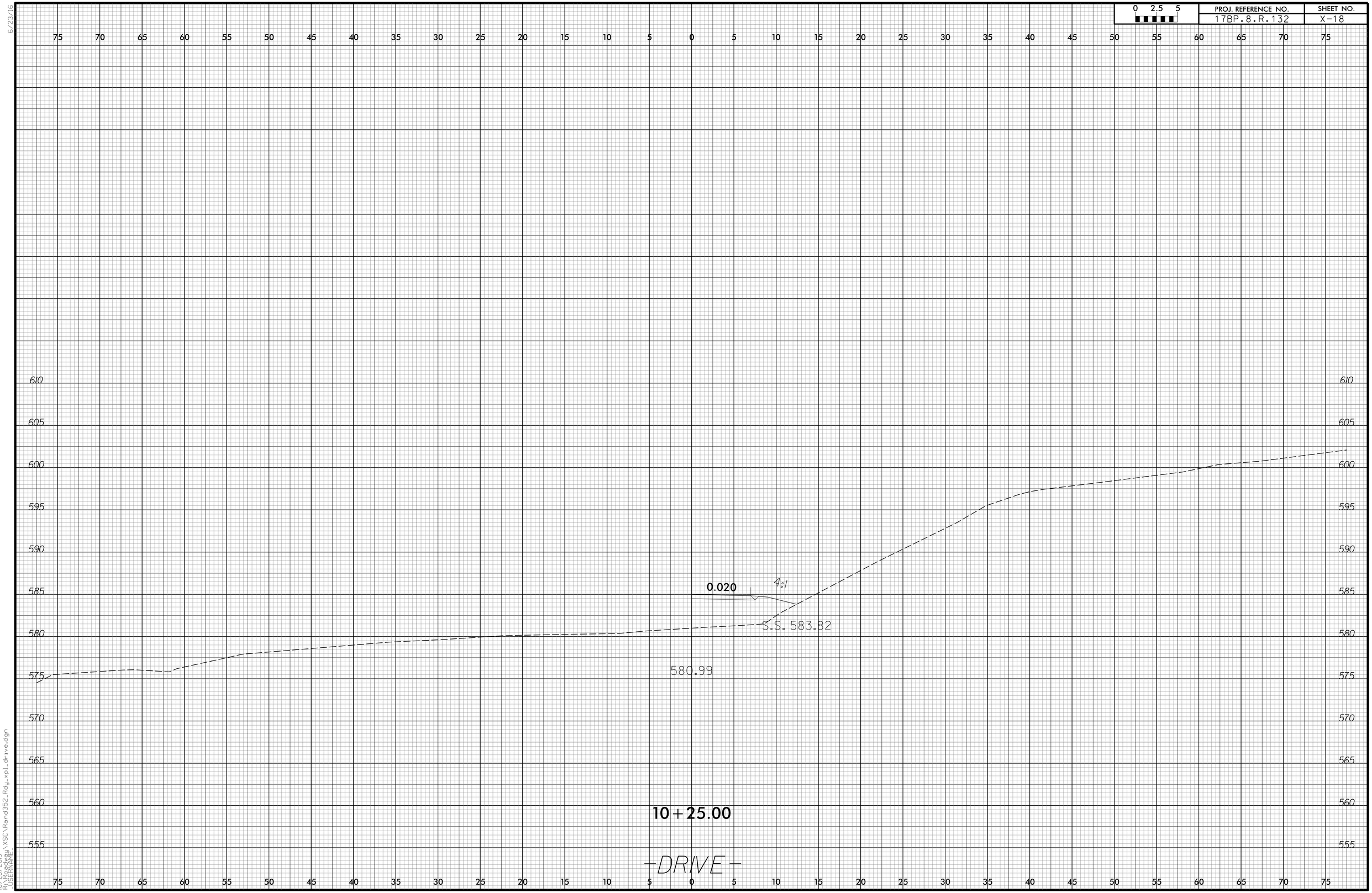

10/28/2019
R:\Projects\XSC\Rand352_Rdy_xpl_drive.dgn
USERNAME

6/23/16

0 2.5 5	PROJ. REFERENCE NO.	SHEET NO.
	17BP.8.R.132	X-19

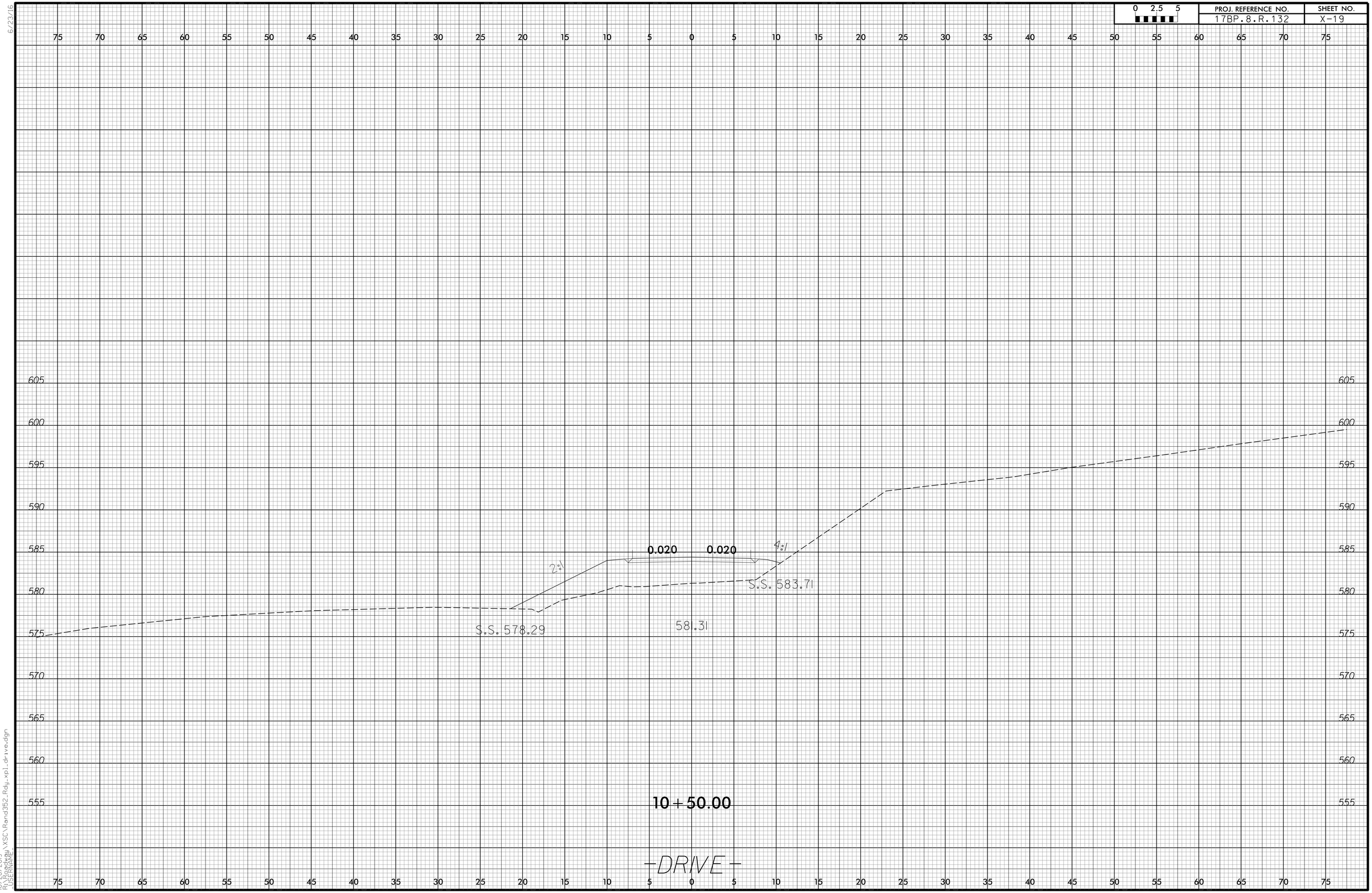

10/28/2019
R:\Corridor\Alt WSC\Rand352_Rdy_xpl_drive.dgn
USERNAME=

6/23/16

0 2.5 5	PROJ. REFERENCE NO.	SHEET NO.
	17BP.8.R.132	X-20

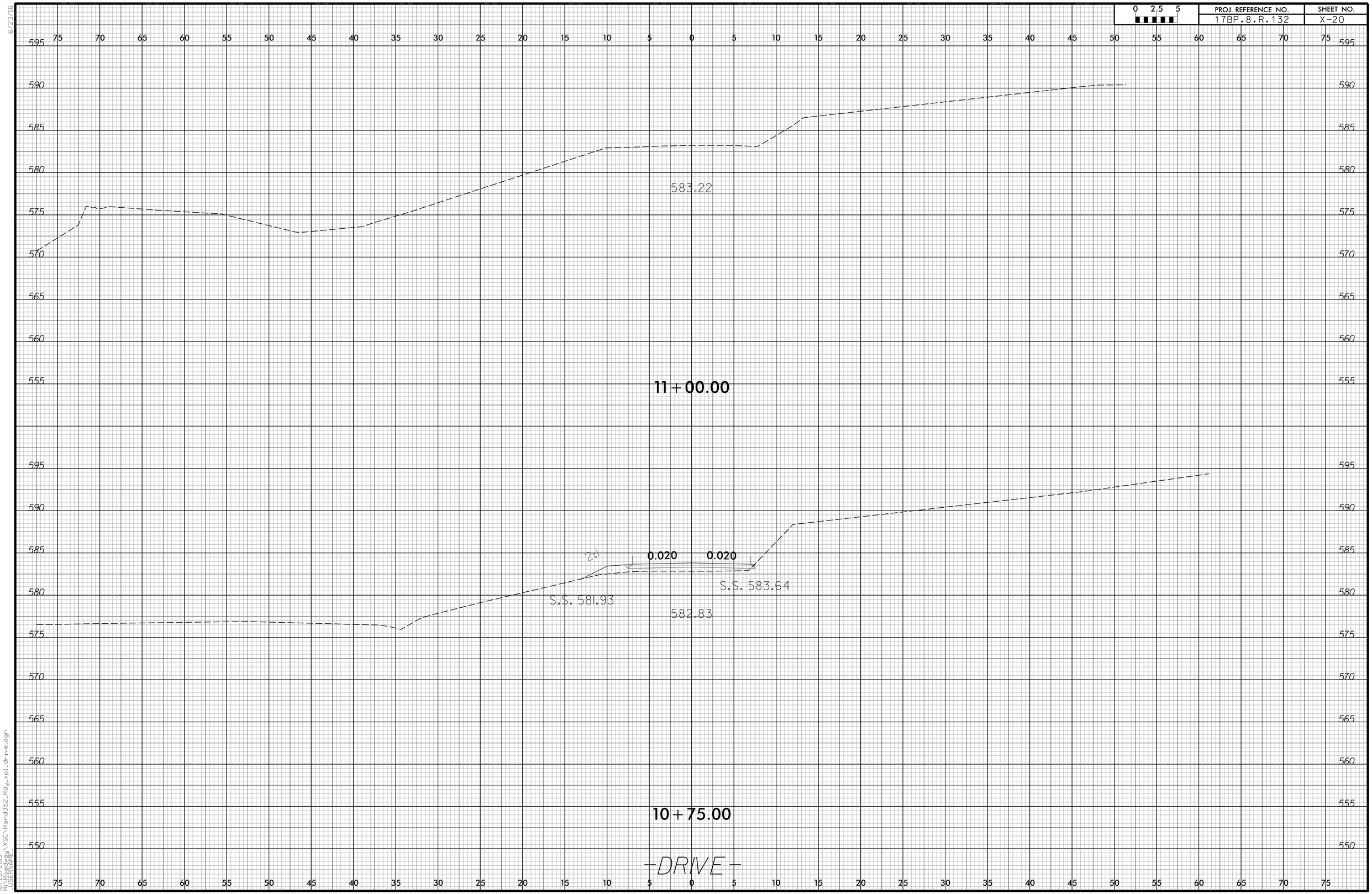

10/28/2019
R:\SERRA\Rd\VSC\Rand352_Rdy_xpl_drive.dgn
USER: RAB

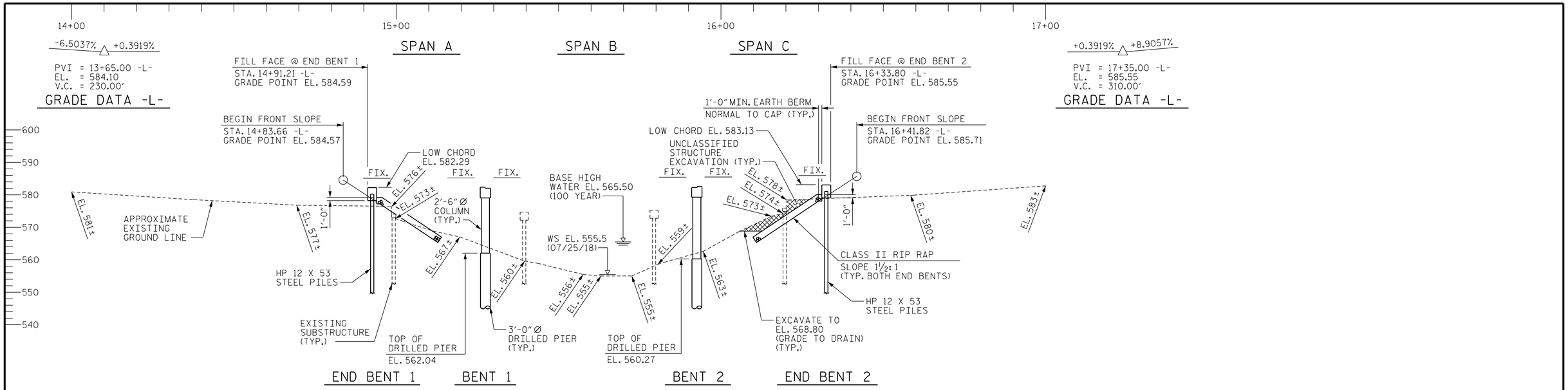

SECTION ALONG -L-

(SECTION TAKEN AT RIGHT ANGLES TO END BENTS AND BENTS)

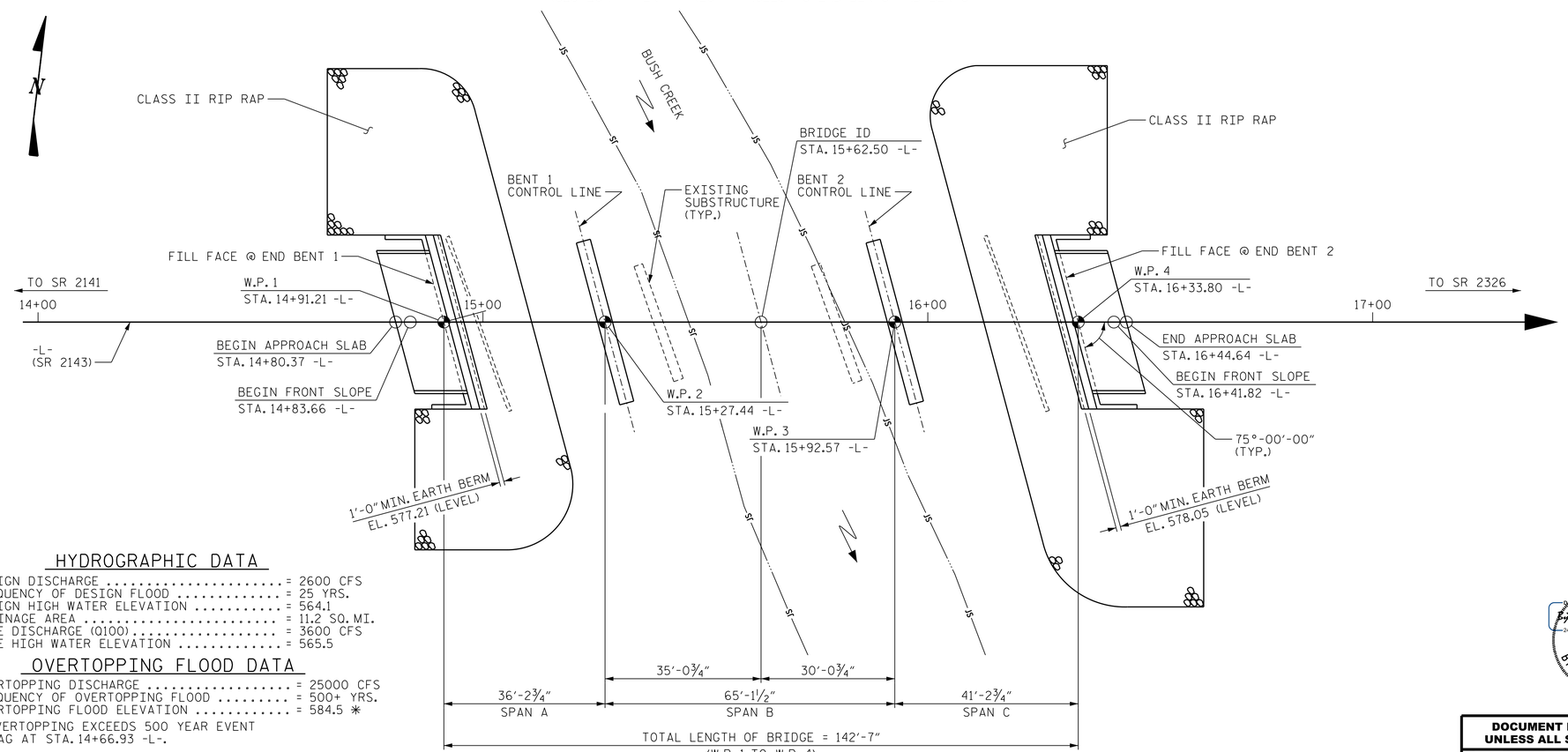

PLAN

(PILES NOT SHOWN FOR CLARITY)

HYDROGRAPHIC DATA

DESIGN DISCHARGE ..... = 2600 CFS
FREQUENCY OF DESIGN FLOOD ..... = 25 YRS.
DESIGN HIGH WATER ELEVATION ..... = 564.1
DRAINAGE AREA ..... = 11.2 SQ. MI.
BASE DISCHARGE (Q100)..... = 3600 CFS
BASE HIGH WATER ELEVATION ..... = 565.5

OVERTOPPING FLOOD DATA

OVERTOPPING DISCHARGE ..... = 25000 CFS
FREQUENCY OF OVERTOPPING FLOOD ..... = 500+ YRS.
OVERTOPPING FLOOD ELEVATION ..... = 584.5 ✱

✱ OVERTOPPING EXCEEDS 500 YEAR EVENT SAG AT STA. 14+66.93 -L-.

I HEREBY CERTIFY THESE PLANS ARE THE AS-BUILT PLANS

PROJECT NO. 17BP.8.R.132
RANDOLPH COUNTY
STATION: 15+62.50 -L-

SHEET 1 OF 3 REPLACES BRIDGE NO. 352

STATE OF NORTH CAROLINA
DEPARTMENT OF TRANSPORTATION
RALEIGH

GENERAL DRAWING

FOR BRIDGE ON SR 2143
OVER BUSH CREEK
BETWEEN SR 2141 & SR 2326

NORTH CAROLINA PROFESSIONAL SEAL 24939 ENGINEER BYRON E. ATKINSON
9/4/2019

DOCUMENT NOT CONSIDERED FINAL UNLESS ALL SIGNATURES COMPLETED

MI ENGINEERING
1011 SCHAUB DRIVE, SUITE 100
RALEIGH, NC 27606
(919) 851-6606
FIRM PE NUMBER : P-0671

REVISIONS								SHEET NO.
NO.	BY:	DATE:	NO.	BY:	DATE:			S-1
1			3					TOTAL SHEETS
2			4					24

DRAWN BY : B.E. LANNING DATE : 04/19
CHECKED BY : B.E. ATKINSON DATE : 04/19
DESIGN ENGINEER OF RECORD : B.E. ATKINSON DATE : 04/19

9/4/2019
1:27:12 PM
User: blanning
Filename: N:\NC Bridges\MI8005.02_CH Eng.Randolph 352 Br. Rep\17BP8R132\Structures\401_001_17BP8R132_SMU_GD1_750352.dgn

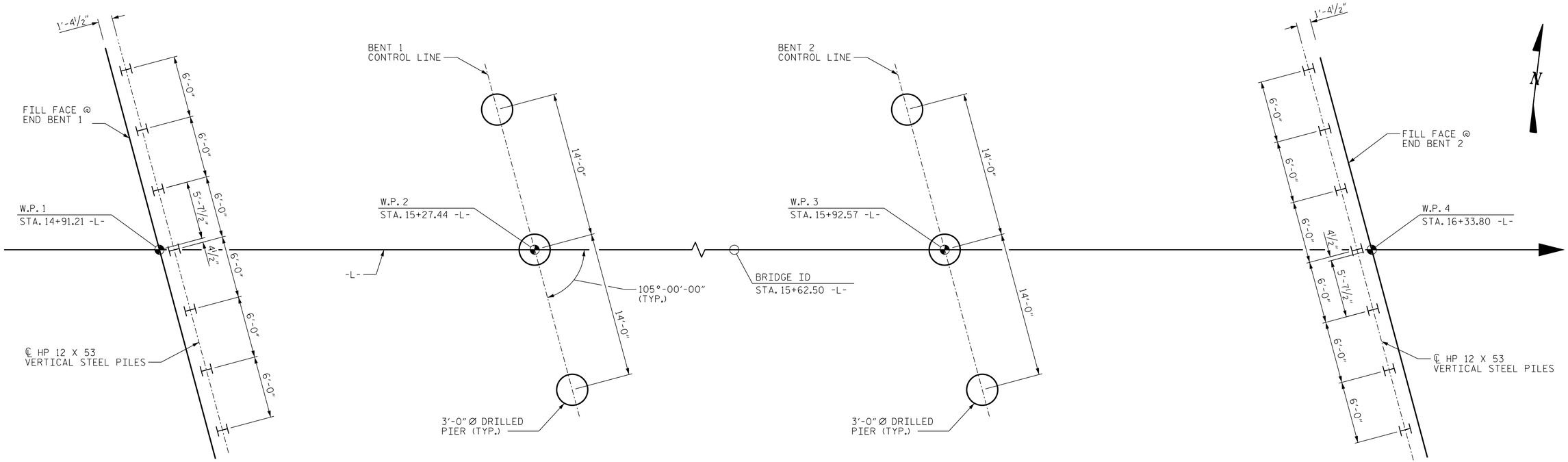

FOUNDATION LAYOUT

DIMENSIONS LOCATING END BENT PILES AND BENT DRILLED PIERS
ARE SHOWN TO CENTERLINE OF PILES AND DRILLED PIERS.

FOUNDATION NOTES

FOR PILES, SEE SECTION 450 OF THE STANDARD SPECIFICATIONS.

FOR DRILLED PIERS, SEE SECTION 411 OF THE STANDARD SPECIFICATIONS.

PILES AT END BENT 1 ARE DESIGNED FOR A FACTORED RESISTANCE OF 55 TONS PER PILE.

PILES AT END BENT 2 ARE DESIGNED FOR A FACTORED RESISTANCE OF 59 TONS PER PILE.

DRIVE PILES AT END BENT 1 TO A REQUIRED DRIVING RESISTANCE OF 95 TONS PER PILE.

DRIVE PILES AT END BENT 2 TO A REQUIRED DRIVING RESISTANCE OF 100 TONS PER PILE.

IT HAS BEEN ESTIMATED THAT A HAMMER WITH AN EQUIVALENT RATED ENERGY IN THE RANGE OF 30 TO 40 FT-KIPS PER BLOW WILL BE REQUIRED TO DRIVE PILES AT END BENT 1 AND END BENT 2. THIS ESTIMATED ENERGY RANGE DOES NOT RELEASE THE CONTRACTOR FROM PROVIDING DRIVING EQUIPMENT IN ACCORDANCE WITH SUBARTICLE 450-3(D)(2) OF THE STANDARD SPECIFICATIONS.

DRILLED PIERS AT BENT 1 ARE DESIGNED FOR A FACTORED RESISTANCE OF 360 TONS PER PIER. NO TIP RESISTANCE REQUIRED.

DRILLED PIERS AT BENT 2 ARE DESIGNED FOR A FACTORED RESISTANCE OF 360 TONS PER PIER. CHECK FIELD CONDITIONS FOR THE REQUIRED TIP RESISTANCE OF 40 TSF.

INSTALL DRILLED PIERS AT BENT 1 (LEFT) TO A TIP ELEVATION NO HIGHER THAN 550.8 FT AND A PENETRATION OF AT LEAST 4.5 FT INTO ROCK AS DEFINED BY ARTICLE 411-1 OF THE STANDARD SPECIFICATIONS.

INSTALL DRILLED PIERS AT BENT 1 (CENTER AND RIGHT) TO A TIP ELEVATION NO HIGHER THAN 528.1 FT AND A PENETRATION OF AT LEAST 4.5 FT INTO ROCK AS DEFINED BY ARTICLE 411-1 OF THE STANDARD SPECIFICATIONS.

INSTALL DRILLED PIERS AT BENT 2 (LEFT) TO A TIP ELEVATION NO HIGHER THAN 542.0 FT AND A PENETRATION OF AT LEAST 7 FT INTO ROCK AS DEFINED BY ARTICLE 411-1 OF THE STANDARD SPECIFICATIONS.

INSTALL DRILLED PIERS AT BENT 2 (CENTER AND RIGHT) TO A TIP ELEVATION NO HIGHER THAN 537.2 FT AND A PENETRATION OF AT LEAST 7 FT INTO ROCK AS DEFINED BY ARTICLE 411-1 OF THE STANDARD SPECIFICATIONS.

PERMANENT STEEL CASINGS MAY BE REQUIRED FOR DRILLED PIERS AT BENT 1 AND BENT 2. IF REQUIRED, DO NOT EXTEND PERMANENT CASINGS BELOW ELEVATION 558.5 FT AT BENT 1 AND 556 FT AT BENT 2 WITHOUT PRIOR APPROVAL FROM THE ENGINEER. THE ENGINEER WILL DETERMINE THE NEED FOR PERMANENT CASINGS.

INSTALL PERMANENT STEEL CASING AT BENT 1 AND BENT 2 BY VIBRATING, SCREWING OR DRIVING PERMANENT CASINGS BEFORE EXCAVATION OR DISTURBING ANY MATERIAL BELOW ELEVATION 558.5 AND 556 FT, RESPECTIVELY.

THE SCOUR CRITICAL ELEVATIONS FOR BENT 1 IS ELEVATION 556.8 FT FOR THE LEFT SIDE AND ELEVATION 542.6 FT FOR THE CENTER AND RIGHT SIDE. SCOUR CRITICAL ELEVATIONS ARE USED TO MONITOR POSSIBLE SCOUR PROBLEMS DURING THE LIFE OF THE STRUCTURE.

THE SCOUR CRITICAL ELEVATIONS FOR BENT 2 IS ELEVATION 554.1 FT. SCOUR CRITICAL ELEVATIONS ARE USED TO MONITOR POSSIBLE SCOUR PROBLEMS DURING THE LIFE OF THE STRUCTURE.

SID INSPECTIONS MAY BE REQUIRED FOR DRILLED PIERS. THE ENGINEER WILL DETERMINE THE NEED FOR SID INSPECTIONS. FOR SID INSPECTIONS, SEE SECTION 411 OF THE STANDARD SPECIFICATIONS.

CSL TUBES ARE REQUIRED AND CSL TESTING MAY BE REQUIRED FOR DRILLED PIERS. THE ENGINEER WILL DETERMINE THE NEED FOR CSL TESTING. FOR CSL TESTING, SEE SECTION 411 OF THE STANDARD SPECIFICATIONS.

NORTH CAROLINA PROFESSIONAL SEAL 24939 ENGINEER BYRON E. ATKINSON

9/4/2019

PROJECT NO. 17BP.8.R.132
RANDOLPH COUNTY
STATION: 15+62.50 -L-

SHEET 2 OF 3

STATE OF NORTH CAROLINA
DEPARTMENT OF TRANSPORTATION
RALEIGH

GENERAL DRAWING

FOR BRIDGE ON SR 2143
OVER BUSH CREEK
BETWEEN SR 2141 & SR 2326

DOCUMENT NOT CONSIDERED FINAL UNLESS ALL SIGNATURES COMPLETED

MI ENGINEERING
1011 SCHAUB DRIVE, SUITE 100
RALEIGH, NC 27606
(919) 851-6606
FIRM PE NUMBER : P-0671

REVISIONS						SHEET NO.
NO.	BY:	DATE:	NO.	BY:	DATE:	S-2
1			3			TOTAL SHEETS
2			4			24

DRAWN BY :	B.E. LANNING	DATE :	04/19
CHECKED BY :	B.E. ATKINSON	DATE :	04/19
DESIGN ENGINEER OF RECORD :	B.E. ATKINSON	DATE :	04/19

9/4/2019
1:27:14 PM
User: blanning
Filename: N:\NC Bridges\MI8005.02.CH Eng.Randolph 352 Br. Rep\17BP8R132\Structures\401.003.17BP8R132.SMU.GD2.750352.dgn

BM #1: BENCH TIE NAIL IN POPLAR TREE, 39.26' RIGHT OF STA. 14+96.00 -L-, EL. 572.32

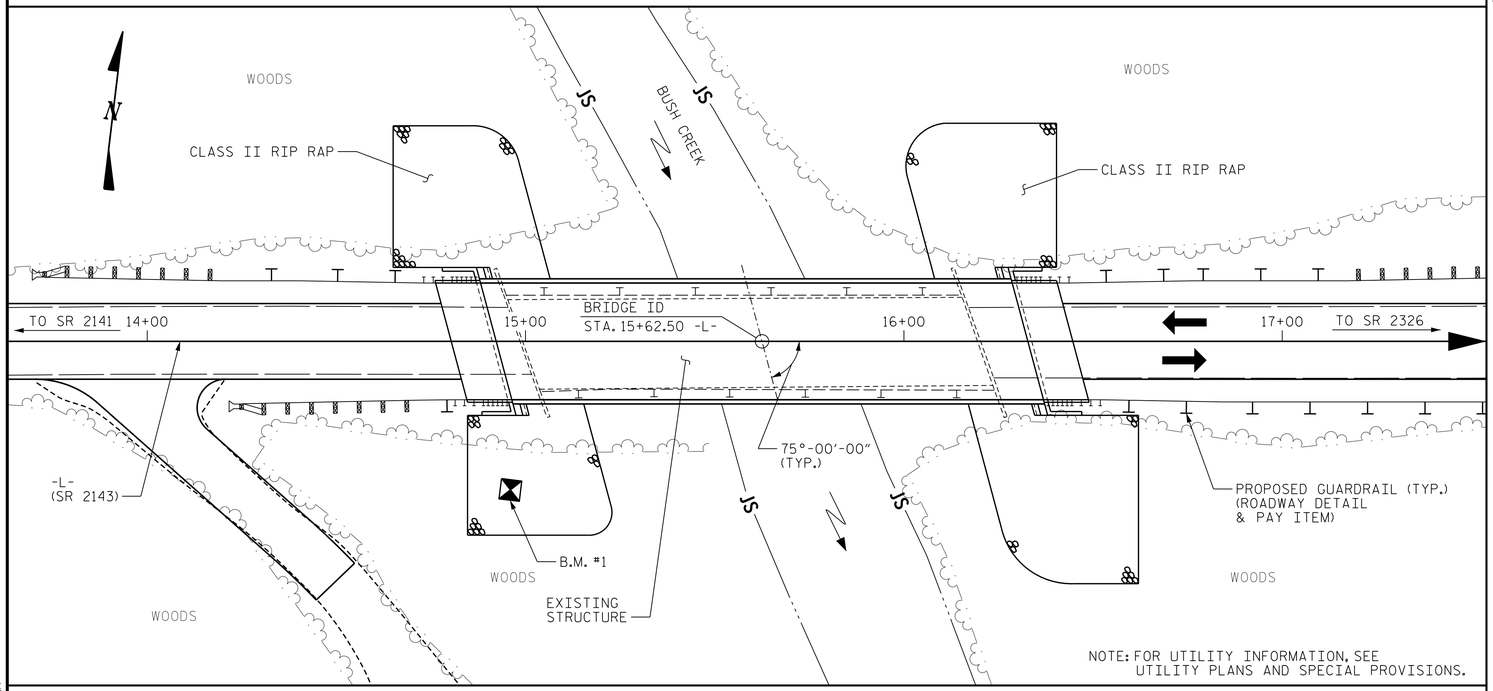

LOCATION SKETCH

NOTES

ASSUMED LIVE LOAD = HL 93 OR ALTERNATE LOADING.

THIS BRIDGE HAS BEEN DESIGNED IN ACCORDANCE WITH THE AASHTO LRFD BRIDGE DESIGN SPECIFICATIONS.

THIS BRIDGE IS LOCATED IN SEISMIC ZONE 1.

FOR OTHER DESIGN DATA AND GENERAL NOTES, SEE SHEET SN.

FOR EROSION CONTROL MEASURES, SEE EROSION CONTROL PLANS.

THE EXISTING STRUCTURE CONSISTING OF THREE SPANS (2 @ 41'-2" AND 1 @ 40'-0", WITH STEEL PLANK DECK ON I-BEAMS AND A CLEAR ROADWAY WIDTH OF 24'-0" ON REINFORCED CONCRETE CAP WITH TIMBER PILE END BENTS AND INTERIOR BENTS AND LOCATED AT THE SITE OF THE PROPOSED STRUCTURE SHALL BE REMOVED. THE EXISTING BRIDGE IS PRESENTLY POSTED FOR LOAD LIMIT. FOR REMOVAL OF EXISTING STRUCTURE, SEE SPECIAL PROVISIONS.

THE SUBSTRUCTURE OF THE EXISTING BRIDGE INDICATED ON THE PLANS IS FROM THE BEST INFORMATION AVAILABLE. THIS INFORMATION IS SHOWN FOR THE CONVENIENCE OF THE CONTRACTOR. THE CONTRACTOR SHALL HAVE NO CLAIM WHATSOEVER AGAINST THE DEPARTMENT OF TRANSPORTATION FOR ANY DELAYS OR ADDITIONAL COST INCURRED BASED ON DIFFERENCES BETWEEN THE EXISTING BRIDGE SUBSTRUCTURE SHOWN ON THE PLANS AND THE ACTUAL CONDITIONS AT THE PROJECT SITE.

REMOVAL OF THE EXISTING BRIDGE SHALL BE PERFORMED IN A MANNER THAT PREVENTS DEBRIS FROM FALLING INTO THE WATER. THE CONTRACTOR SHALL SUBMIT DEMOLITION PLANS FOR REVIEW AND REMOVE THE BRIDGE IN ACCORDANCE WITH ARTICLE 402-2 OF THE STANDARD SPECIFICATIONS.

THE MATERIAL SHOWN IN THE CROSS-HATCHED AREA ON SHEET S-1 SHALL BE EXCAVATED FOR A DISTANCE OF 35 FT. EACH SIDE OF CENTERLINE ROADWAY AS DIRECTED BY THE ENGINEER. THIS WORK WILL BE PAID FOR AT THE CONTRACT LUMP SUM PRICE FOR UNCLASSIFIED STRUCTURE EXCAVATION. SEE SECTION 412 OF THE STANDARD SPECIFICATIONS.

ASPHALT WEARING SURFACE IS INCLUDED IN THE ROADWAY QUANTITY. SEE ROADWAY QUANTITIES.

THIS STRUCTURE HAS BEEN DESIGNED IN ACCORDANCE WITH "HEC 18- EVALUATING SCOUR AT BRIDGES".

FOR SUBMITTAL OF WORKING DRAWINGS, SEE SPECIAL PROVISIONS.

FOR FALSEWORK AND FORMWORK, SEE SPECIAL PROVISIONS.

FOR CRANE SAFETY, SEE SPECIAL PROVISIONS.

FOR GROUT FOR STRUCTURES, SEE SPECIAL PROVISIONS.

FOR ASBESTOS ASSESSMENT FOR BRIDGE DEMOLITION AND RENOVATION ACTIVITIES, SEE SPECIAL PROVISIONS.

AT THE CONTRACTOR'S OPTION, PRESTRESSED CONCRETE END BENT CAPS MAY BE SUBSTITUTED IN PLACE OF THE CAST-IN-PLACE CAPS. THE CONTRACTOR SHALL COORDINATE WITH THE RESIDENT ENGINEER TO RECEIVE REVISED PLANS AND DETAILS FROM THE STRUCTURES MANAGEMENT UNIT. THE REDESIGN AND ANY ADDITIONAL MATERIALS NEEDED WILL BE AT NO ADDITIONAL COST TO THE CONTRACTOR.

FOR FOUNDATION NOTES, SEE "FOUNDATION LAYOUT" SHEET.

TOTAL BILL OF MATERIAL

	REMOVAL OF EXISTING STRUCTURE	ASBESTOS ASSESSMENT	3'-0" Ø DRILLED PIER IN SOIL	3'-0" Ø DRILLED PIER NOT IN SOIL	PERMANENT STEEL CASING FOR 3'-0" Ø DRILLED PIER	SID INSPECTIONS	CSL TESTING	UNCLASSIFIED STRUCTURE EXCAVATION	CLASS A CONCRETE	BRIDGE APPROACH SLABS	REINFORCING STEEL	SPIRAL COLUMN REINFORCING STEEL	PILE DRIVING EQUIPMENT SETUP FOR HP 12 X 53 STEEL PILES	HP 12 X 53 STEEL PILES		VERTICAL CONCRETE BARRIER RAIL	RIP RAP CLASS II (2'-0" THICK)	GEOTEXTILE FOR DRAINAGE	ELASTOMERIC BEARINGS	3'-0" X 1'-9" PRESTRESSED CONCRETE CORED SLABS		3'-0" X 2'-0" PRESTRESSED CONCRETE CORED SLABS	
	LUMP SUM	LUMP SUM	LIN. FT.	LIN. FT.	LIN. FT.	EACH	EACH	LUMP SUM	CU. YDS.	LUMP SUM	LBS.	LBS.	EACH	NO.	LIN. FT.	LIN. FT.	TON	SQ. YDS.	LUMP SUM	NO.	LIN. FT.	NO.	LIN. FT.
SUPERSTRUCTURE										LUMP SUM						280.76			LUMP SUM	22	825.00	11	715.00
END BENT 1								LUMP SUM	22.2		2714		7	7	230		410	455					
BENT 1			66.0	14.0	19.5				23.6		12,388	2277											
BENT 2			43.0	22.0	19.5				24.7		11,909	2135											
END BENT 2								LUMP SUM	22.2		2714		7	7	265		503	559					
TOTAL	LUMP SUM	LUMP SUM	109.0	36.0	39.0	2	2	LUMP SUM	92.7	LUMP SUM	29,725	4412	14	14	495	280.76	913	1014	LUMP SUM	22	825.00	11	715.00

PROJECT NO. 17BP.8.R.132

RANDOLPH COUNTY

STATION: 15+62.50 -L-

SHEET 3 OF 3

STATE OF NORTH CAROLINA
DEPARTMENT OF TRANSPORTATION
RALEIGH

GENERAL DRAWING

FOR BRIDGE ON SR 2143
OVER BUSH CREEK
BETWEEN SR 2141 & SR 2326

NORTH CAROLINA PROFESSIONAL SEAL 24939 ENGINEER BYRON E. ATKINSON

9/4/2019

DOCUMENT NOT CONSIDERED FINAL
UNLESS ALL SIGNATURES COMPLETED

MI ENGINEERING
1011 SCHAUB DRIVE, SUITE 100
RALEIGH, NC 27606
(919) 851-6606
FIRM PE NUMBER : P-0671

REVISIONS								SHEET NO.
NO.	BY:	DATE:	NO.	BY:	DATE:			S-3
1			3					TOTAL SHEETS
2			4					24

DRAWN BY : B.E. LANNING DATE : 04/19
CHECKED BY : B.E. ATKINSON DATE : 04/19
DESIGN ENGINEER OF RECORD : B.E. ATKINSON DATE : 04/19

9/4/2019
1:27:17 PM
User: blanning
Filename: N:\NC Bridges\MI8005.02_CH Eng_Randolph 352 Br. Rep\17BP8R132\Structures\401_005_17BP8R132_SMU_003_750352.dgn

LOAD AND RESISTANCE FACTOR RATING (LRFD) SUMMARY FOR PRESTRESSED CONCRETE GIRDERS

LEVEL		VEHICLE	WEIGHT (W) (TONS)	CONTROLLING LOAD RATING	MINIMUM RATING FACTORS (RF)	TONS = W X RF	STRENGTH I LIMIT STATE											SERVICE III LIMIT STATE						COMMENT NUMBER
							LIVELOAD FACTORS	MOMENT					SHEAR					LIVELOAD FACTORS	MOMENT					
								DISTRIBUTION FACTORS (DF)	RATING FACTOR	SPAN	GIRDER LOCATION	DISTANCE FROM LEFT END OF SPAN (ft)	DISTRIBUTION FACTORS (DF)	RATING FACTOR	SPAN	GIRDER LOCATION	DISTANCE FROM LEFT END OF SPAN (ft)		DISTRIBUTION FACTORS (DF)	RATING FACTOR	SPAN	GIRDER LOCATION	DISTANCE FROM LEFT END OF SPAN (ft)	
DESIGN LOAD RATING		HL-93(Inv)	N/A	1	1.06	--	1.75	0.275	1.38	35'	EL	16.982	0.623	1.2	35'	EL	1.698	0.80	0.275	**1.06**	35'	EL	**16.982**	
		HL-93(Opr)	N/A	--	1.549	--	1.35	0.275	1.79	35'	EL	16.982	0.623	1.55	35'	EL	1.698	N/A	--	--	--	--	--	
		HS-20(Inv)	36.000	2	1.377	49.573	1.75	0.275	1.82	35'	EL	13.586	0.623	**1.38**	35'	EL	**1.698**	0.80	0.275	1.41	35'	EL	16.982	
		HS-20(Opr)	36.000	--	1.785	64.262	1.35	0.275	2.36	35'	EL	13.586	0.623	1.79	35'	EL	1.698	N/A	--	--	--	--	--	
LEGAL LOAD RATING	SV	SNSH	13.500	--	2.424	32.72	1.4	0.275	3.95	35'	EL	16.982	0.623	3.55	35'	EL	1.698	0.80	0.275	2.42	35'	EL	16.982	
		SNGARBS2	20.000	--	2.082	41.635	1.4	0.275	3.34	35'	EL	13.586	0.623	2.68	35'	EL	1.698	0.80	0.275	2.08	35'	EL	13.586	
		SNAGRIS2	22.000	--	2.076	45.668	1.4	0.275	3.31	35'	EL	13.586	0.623	2.56	35'	EL	1.698	0.80	0.275	2.08	35'	EL	13.586	
		SNCOTTS3	27.250	--	1.213	33.066	1.4	0.275	1.98	35'	EL	16.982	0.623	1.79	35'	EL	1.698	0.80	0.275	1.21	35'	EL	16.982	
		SNAGGRS4	34.925	--	1.123	39.207	1.4	0.275	1.83	35'	EL	16.982	0.623	1.6	35'	EL	1.698	0.80	0.275	1.12	35'	EL	16.982	
		SNS5A	35.550	--	1.09	38.739	1.4	0.275	1.77	35'	EL	16.982	0.623	1.69	35'	EL	1.698	0.80	0.275	1.09	35'	EL	16.982	
		SNS6A	39.950	--	1.052	42.014	1.4	0.275	1.71	35'	EL	16.982	0.623	1.58	35'	EL	1.698	0.80	0.275	1.05	35'	EL	16.982	
		SNS7B	42.000	3	1.004	42.153	1.4	0.275	1.63	35'	EL	16.982	0.623	1.62	35'	EL	1.698	0.80	0.275	**1.00**	35'	EL	**16.982**	
	TTST	TNAGRIT3	33.000	--	1.299	42.872	1.4	0.275	2.11	35'	EL	16.982	0.623	1.85	35'	EL	1.698	0.80	0.275	1.30	35'	EL	16.982	
		TNT4A	33.075	--	1.298	42.933	1.4	0.275	2.11	35'	EL	16.982	0.623	1.75	35'	EL	1.698	0.80	0.275	1.30	35'	EL	16.982	
		TNT6A	41.600	--	1.137	47.314	1.4	0.275	1.85	35'	EL	16.982	0.623	1.71	35'	EL	1.698	0.80	0.275	1.14	35'	EL	16.982	
		TNT7A	42.000	--	1.175	49.358	1.4	0.275	1.92	35'	EL	16.982	0.623	1.59	35'	EL	1.698	0.80	0.275	1.18	35'	EL	16.982	
		TNT7B	42.000	--	1.156	48.536	1.4	0.275	1.88	35'	EL	16.982	0.623	1.54	35'	EL	1.698	0.80	0.275	1.16	35'	EL	16.982	
		TNAGRIT4	43.000	--	1.17	50.308	1.4	0.275	1.89	35'	EL	13.586	0.623	1.48	35'	EL	1.698	0.80	0.275	1.17	35'	EL	16.982	
		TNAGT5A	45.000	--	1.079	48.572	1.4	0.275	1.76	35'	EL	16.982	0.623	1.56	35'	EL	1.698	0.80	0.275	1.08	35'	EL	16.982	
		TNAGT5B	45.000	--	1.041	46.853	1.4	0.275	1.69	35'	EL	16.982	0.623	1.4	35'	EL	1.698	0.80	0.275	1.04	35'	EL	16.982	

LOAD FACTORS:

DESIGN LOAD RATING FACTORS	LIMIT STATE	γ_{DC}	γ_{DW}
	STRENGTH I	1.25	1.50
	SERVICE III	1.00	1.00

NOTES:

MINIMUM RATING FACTORS ARE BASED ON THE STRENGTH I AND SERVICE III LIMIT STATES.

ALLOWABLE STRESSES FOR SERVICE III LIMIT STATE ARE AS REQUIRED FOR DESIGN.

COMMENTS:

1.
2.
3.
4.

(#) CONTROLLING LOAD RATING

(1) DESIGN LOAD RATING (HL-93)

(2) DESIGN LOAD RATING (HS-20)

(3) LEGAL LOAD RATING **

** SEE CHART FOR VEHICLE TYPE

GIRDER LOCATION

I - INTERIOR GIRDER
EL - EXTERIOR LEFT GIRDER
ER - EXTERIOR RIGHT GIRDER

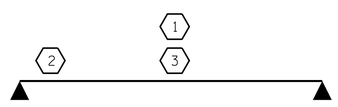

LRFR SUMMARY

FOR SPAN 'A'

PROJECT NO. 17BP.8.R.132

RANDOLPH COUNTY

STATION: 15+62.50 -L-

NORTH CAROLINA PROFESSIONAL SEAL 24939 ENGINEER BYRON E. ATKINSON

9/4/2019

DOCUMENT NOT CONSIDERED FINAL UNLESS ALL SIGNATURES COMPLETED

MI ENGINEERING
1011 SCHAUB DRIVE, SUITE 100
RALEIGH, NC 27606
(919) 851-6606
FIRM PE NUMBER : P-0671

STATE OF NORTH CAROLINA
DEPARTMENT OF TRANSPORTATION
RALEIGH

STANDARD
LRFR SUMMARY FOR 35' CORED SLAB UNIT 75° SKEW
(NON-INTERSTATE TRAFFIC)

REVISIONS						SHEET NO.
NO.	BY:	DATE:	NO.	BY:	DATE:	S-4
1			3			TOTAL SHEETS
2			4			24

ASSEMBLED BY:	B.E. LANNING	DATE: 04/19
CHECKED BY :	B.E. ATKINSON	DATE: 04/19
DESIGN ENGINEER OF RECORD:	B.E. ATKINSON	DATE: 04/19
DRAWN BY : CVC 6/10		
CHECKED BY : DNS 6/10		

STD. NO. 21LRFR1_75&105S_35L

9/4/2019
1:27:19 PM
User: blanning
Filename: N:\NC Bridges\MI8005.02_CH Eng.Randolph 352 Br. Rep\17BP8R132\Structures\401.007_17BP8R132_SMU_GD4_750352.dgn

LOAD AND RESISTANCE FACTOR RATING (LRFD) SUMMARY FOR PRESTRESSED CONCRETE GIRDERS

LEVEL		VEHICLE	WEIGHT (W) (TONS)	CONTROLLING LOAD RATING	MINIMUM RATING FACTORS (RF)	TONS = W X RF	STRENGTH I LIMIT STATE											SERVICE III LIMIT STATE						COMMENT NUMBER
								MOMENT					SHEAR						MOMENT					
							LIVELOAD FACTORS	DISTRIBUTION FACTORS (DF)	RATING FACTOR	SPAN	GIRDER LOCATION	DISTANCE FROM LEFT END OF SPAN (ft)	DISTRIBUTION FACTORS (DF)	RATING FACTOR	SPAN	GIRDER LOCATION	DISTANCE FROM LEFT END OF SPAN (ft)	LIVELOAD FACTORS	DISTRIBUTION FACTORS (DF)	RATING FACTOR	SPAN	GIRDER LOCATION	DISTANCE FROM LEFT END OF SPAN (ft)	
DESIGN LOAD RATING		HL-93(Inv)	N/A	**1**	1.03	--	1.75	0.269	1.06	65'	EL	31.982	0.608	1.05	65'	EL	3.198	0.80	0.269	**1.03**	65'	EL	**31.982**	
		HL-93(Opr)	N/A	--	1.362	--	1.35	0.269	1.38	65'	EL	31.982	0.608	1.36	65'	EL	3.198	N/A	--	--	--	--	--	
		HS-20(Inv)	36.000	**2**	1.296	46.666	1.75	0.269	1.36	65'	EL	31.982	0.608	**1.3**	65'	EL	**3.198**	0.80	0.269	1.32	65'	EL	31.982	
		HS-20(Opr)	36.000	--	1.68	60.493	1.35	0.269	1.76	65'	EL	31.982	0.608	1.68	65'	EL	3.198	N/A	--	--	--	--	--	
LEGAL LOAD RATING	SV	SNSH	13.500	--	2.898	39.127	1.4	0.269	3.74	65'	EL	31.982	0.608	3.82	65'	EL	3.198	0.80	0.269	2.90	65'	EL	31.982	
		SNGARBS2	20.000	--	2.194	43.878	1.4	0.269	2.83	65'	EL	31.982	0.608	2.73	65'	EL	3.198	0.80	0.269	2.19	65'	EL	31.982	
		SNAGRIS2	22.000	--	2.092	46.029	1.4	0.269	2.7	65'	EL	31.982	0.608	2.54	65'	EL	3.198	0.80	0.269	2.09	65'	EL	31.982	
		SNCOTTS3	27.250	--	1.443	39.328	1.4	0.269	1.86	65'	EL	31.982	0.608	1.91	65'	EL	3.198	0.80	0.269	1.44	65'	EL	31.982	
		SNAGGRS4	34.925	--	1.219	42.576	1.4	0.269	1.57	65'	EL	31.982	0.608	1.59	65'	EL	3.198	0.80	0.269	1.22	65'	EL	31.982	
		SNS5A	35.550	--	1.191	42.349	1.4	0.269	1.54	65'	EL	31.982	0.608	1.62	65'	EL	3.198	0.80	0.269	1.19	65'	EL	31.982	
		SNS6A	39.950	--	1.098	43.884	1.4	0.269	1.42	65'	EL	31.982	0.608	1.48	65'	EL	3.198	0.80	0.269	1.10	65'	EL	31.982	
		SNS7B	42.000	--	1.046	43.944	1.4	0.269	1.35	65'	EL	31.982	0.608	1.46	65'	EL	3.198	0.80	0.269	1.05	65'	EL	31.982	
	TTST	TNAGRIT3	33.000	--	1.341	44.258	1.4	0.269	1.73	65'	EL	31.982	0.608	1.76	65'	EL	3.198	0.80	0.269	1.34	65'	EL	31.982	
		TNT4A	33.075	--	1.349	44.604	1.4	0.269	1.74	65'	EL	31.982	0.608	1.71	65'	EL	3.198	0.80	0.269	1.35	65'	EL	31.982	
		TNT6A	41.600	--	1.108	46.092	1.4	0.269	1.43	65'	EL	31.982	0.608	1.56	65'	EL	3.198	0.80	0.269	1.11	65'	EL	31.982	
		TNT7A	42.000	--	1.116	46.888	1.4	0.269	1.44	65'	EL	31.982	0.608	1.52	65'	EL	3.198	0.80	0.269	1.12	65'	EL	31.982	
		TNT7B	42.000	--	1.162	48.806	1.4	0.269	1.5	65'	EL	31.982	0.608	1.42	65'	EL	3.198	0.80	0.269	1.16	65'	EL	31.982	
		TNAGRIT4	43.000	--	1.1	47.307	1.4	0.269	1.42	65'	EL	31.982	0.608	1.37	65'	EL	3.198	0.80	0.269	1.10	65'	EL	31.982	
		TNAGT5A	45.000	--	1.035	46.568	1.4	0.269	1.33	65'	EL	31.982	0.608	1.37	65'	EL	3.198	0.80	0.269	1.03	65'	EL	31.982	
		TNAGT5B	45.000	**3**	1.02	45.907	1.4	0.269	1.32	65'	EL	31.982	0.608	1.3	65'	EL	3.198	0.80	0.269	**1.02**	65'	EL	**31.982**	

LOAD FACTORS:

DESIGN LOAD RATING FACTORS	LIMIT STATE	γ_{DC}	γ_{DW}
	STRENGTH I	1.25	1.50
	SERVICE III	1.00	1.00

NOTES:

MINIMUM RATING FACTORS ARE BASED ON THE STRENGTH I AND SERVICE III LIMIT STATES.

ALLOWABLE STRESSES FOR SERVICE III LIMIT STATE ARE AS REQUIRED FOR DESIGN.

COMMENTS:

1.
2.
3.
4.

(#) CONTROLLING LOAD RATING

(1) DESIGN LOAD RATING (HL-93)

(2) DESIGN LOAD RATING (HS-20)

(3) LEGAL LOAD RATING **

** SEE CHART FOR VEHICLE TYPE

GIRDER LOCATION

I - INTERIOR GIRDER
EL - EXTERIOR LEFT GIRDER
ER - EXTERIOR RIGHT GIRDER

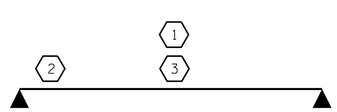

LRFR SUMMARY

FOR SPAN 'B'

PROJECT NO. 17BP.8.R.132

RANDOLPH COUNTY

STATION: 15+62.50 -L-

STATE OF NORTH CAROLINA
DEPARTMENT OF TRANSPORTATION
RALEIGH

STANDARD
LRFR SUMMARY FOR
65' CORED SLAB UNIT
75° SKEW
(NON-INTERSTATE TRAFFIC)

NORTH CAROLINA PROFESSIONAL SEAL 24939 ENGINEER BYRON E. ATKINSON

9/4/2019

DOCUMENT NOT CONSIDERED FINAL UNLESS ALL SIGNATURES COMPLETED

MI ENGINEERING
1011 SCHAUB DRIVE, SUITE 100
RALEIGH, NC 27606
(919) 851-6606
FIRM PE NUMBER : P-0671

REVISIONS						SHEET NO.
NO.	BY:	DATE:	NO.	BY:	DATE:	S-5
1			3			TOTAL SHEETS
2			4			24

STD. NO. 24LRFR1_75&105S_65L

ASSEMBLED BY: B.E. LANNING DATE: 04/19
CHECKED BY : B.E. ATKINSON DATE: 04/19
DESIGN ENGINEER OF RECORD: B.E. ATKINSON DATE: 04/19
DRAWN BY : CVC 6/10
CHECKED BY : DNS 6/10

9/4/2019
1:27:21 PM
User: blanning
Filename: N:\NC Bridges\MI8005.02.CH Eng.Randolph 352 Br.Rep\17BP8R132\Structures\401.009.17BP8R132.SMU.005.750352.dgn

LOAD AND RESISTANCE FACTOR RATING (LRFD) SUMMARY FOR PRESTRESSED CONCRETE GIRDERS

LEVEL		VEHICLE	WEIGHT (W) (TONS)	CONTROLLING LOAD RATING	MINIMUM RATING FACTORS (RF)	TONS = W X RF	STRENGTH I LIMIT STATE											SERVICE III LIMIT STATE						COMMENT NUMBER
								MOMENT					SHEAR						MOMENT					
							LIVELOAD FACTORS	DISTRIBUTION FACTORS (DF)	RATING FACTOR	SPAN	GIRDER LOCATION	DISTANCE FROM LEFT END OF SPAN (ft)	DISTRIBUTION FACTORS (DF)	RATING FACTOR	SPAN	GIRDER LOCATION	DISTANCE FROM LEFT END OF SPAN (ft)	LIVELOAD FACTORS	DISTRIBUTION FACTORS (DF)	RATING FACTOR	SPAN	GIRDER LOCATION	DISTANCE FROM LEFT END OF SPAN (ft)	
DESIGN LOAD RATING		HL-93(Inv)	N/A	1	1.573	--	1.75	0.274	1.78	40'	EL	19.482	0.62	1.6	40'	EL	1.948	0.80	0.274	**1.57**	40'	EL	**19.482**	
		HL-93(Opr)	N/A	--	2.078	--	1.35	0.274	2.31	40'	EL	19.482	0.62	2.08	40'	EL	1.948	N/A	--	--	--	--	--	
		HS-20(Inv)	36.000	2	1.873	67.422	1.75	0.274	2.23	40'	EL	19.482	0.62	**1.87**	40'	EL	**1.948**	0.80	0.274	1.96	40'	EL	19.482	
		HS-20(Opr)	36.000	--	2.428	87.4	1.35	0.274	2.9	40'	EL	19.482	0.62	2.43	40'	EL	1.948	N/A	--	--	--	--	--	
LEGAL LOAD RATING	SV	SNSH	13.500	--	3.642	49.163	1.4	0.274	5.16	40'	EL	19.482	0.62	4.8	40'	EL	7.793	0.80	0.274	3.64	40'	EL	19.482	
		SNGARBS2	20.000	--	2.995	59.897	1.4	0.274	4.24	40'	EL	15.586	0.62	3.65	40'	EL	7.793	0.80	0.274	2.99	40'	EL	19.482	
		SNAGRIS2	22.000	--	2.951	64.924	1.4	0.274	4.14	40'	EL	15.586	0.62	3.49	40'	EL	7.793	0.80	0.274	2.95	40'	EL	15.586	
		SNCOTTS3	27.250	--	1.82	49.605	1.4	0.274	2.58	40'	EL	19.482	0.62	2.42	40'	EL	7.793	0.80	0.274	1.82	40'	EL	19.482	
		SNAGGRS4	34.925	--	1.639	57.231	1.4	0.274	2.32	40'	EL	19.482	0.62	2.18	40'	EL	7.793	0.80	0.274	1.64	40'	EL	19.482	
		SNS5A	35.550	--	1.594	56.664	1.4	0.274	2.26	40'	EL	19.482	0.62	2.3	40'	EL	7.793	0.80	0.274	1.59	40'	EL	19.482	
		SNS6A	39.950	--	1.517	60.592	1.4	0.274	2.15	40'	EL	19.482	0.62	2.16	40'	EL	1.948	0.80	0.274	1.52	40'	EL	19.482	
		SNS7B	42.000	3	1.446	60.751	1.4	0.274	2.05	40'	EL	19.482	0.62	2.2	40'	EL	1.948	0.80	0.274	**1.45**	40'	EL	**19.482**	
	TTST	TNAGRIT3	33.000	--	1.866	61.588	1.4	0.274	2.65	40'	EL	19.482	0.62	2.52	40'	EL	1.948	0.80	0.274	1.87	40'	EL	19.482	
		TNT4A	33.075	--	1.89	62.524	1.4	0.274	2.68	40'	EL	19.482	0.62	2.38	40'	EL	7.793	0.80	0.274	1.89	40'	EL	19.482	
		TNT6A	41.600	--	1.603	66.702	1.4	0.274	2.27	40'	EL	19.482	0.62	2.34	40'	EL	7.793	0.80	0.274	1.60	40'	EL	19.482	
		TNT7A	42.000	--	1.644	69.051	1.4	0.274	2.33	40'	EL	19.482	0.62	2.17	40'	EL	1.948	0.80	0.274	1.64	40'	EL	19.482	
		TNT7B	42.000	--	1.681	70.584	1.4	0.274	2.38	40'	EL	19.482	0.62	2.09	40'	EL	1.948	0.80	0.274	1.68	40'	EL	19.482	
		TNAGRIT4	43.000	--	1.635	70.321	1.4	0.274	2.31	40'	EL	15.586	0.62	2	40'	EL	1.948	0.80	0.274	1.64	40'	EL	19.482	
		TNAGT5A	45.000	--	1.513	68.098	1.4	0.274	2.14	40'	EL	19.482	0.62	2.08	40'	EL	1.948	0.80	0.274	1.51	40'	EL	19.482	
		TNAGT5B	45.000	--	1.47	66.159	1.4	0.274	2.08	40'	EL	19.482	0.62	1.9	40'	EL	1.948	0.80	0.274	1.47	40'	EL	19.482	

LOAD FACTORS:

DESIGN LOAD RATING FACTORS	LIMIT STATE	γ_{DC}	γ_{DW}
	STRENGTH I	1.25	1.50
	SERVICE III	1.00	1.00

NOTES:

MINIMUM RATING FACTORS ARE BASED ON THE STRENGTH I AND SERVICE III LIMIT STATES.

ALLOWABLE STRESSES FOR SERVICE III LIMIT STATE ARE AS REQUIRED FOR DESIGN.

COMMENTS:

1.
2.
3.
4.

(#) CONTROLLING LOAD RATING

(1) DESIGN LOAD RATING (HL-93)

(2) DESIGN LOAD RATING (HS-20)

(3) LEGAL LOAD RATING **

** SEE CHART FOR VEHICLE TYPE

GIRDER LOCATION

I - INTERIOR GIRDER
EL - EXTERIOR LEFT GIRDER
ER - EXTERIOR RIGHT GIRDER

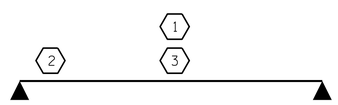

LRFR SUMMARY

FOR SPAN 'C'

PROJECT NO. 17BP.8.R.132

RANDOLPH COUNTY

STATION: 15+62.50 -L-

STATE OF NORTH CAROLINA
DEPARTMENT OF TRANSPORTATION
RALEIGH

STANDARD
LRFR SUMMARY FOR
40' CORED SLAB UNIT
75° SKEW
(NON-INTERSTATE TRAFFIC)

NORTH CAROLINA PROFESSIONAL SEAL 24939 ENGINEER BYRON E. ATKINSON

9/4/2019

DOCUMENT NOT CONSIDERED FINAL UNLESS ALL SIGNATURES COMPLETED

MI ENGINEERING
1011 SCHAUB DRIVE, SUITE 100
RALEIGH, NC 27606
(919) 851-6606
FIRM PE NUMBER : P-0671

REVISIONS						SHEET NO.
NO.	BY:	DATE:	NO.	BY:	DATE:	S-6
1			3			TOTAL SHEETS
2			4			24

ASSEMBLED BY: B.E. LANNING DATE: 04/19
CHECKED BY : B.E. ATKINSON DATE: 04/19
DESIGN ENGINEER OF RECORD: B.E. ATKINSON DATE: 04/19
DRAWN BY : CVC 6/10
CHECKED BY : DNS 6/10

9/4/2019
1:27:23 PM
User: blanning
Filename: N:\NC Bridges\M18005.02_CH Eng.Randolph 352 Br. Repl\17BP8R132\Structures\401_011_17BP8R132_SMU_GD6_750352.dgn

STD. NO. 21LRFR1_75&105S_40L

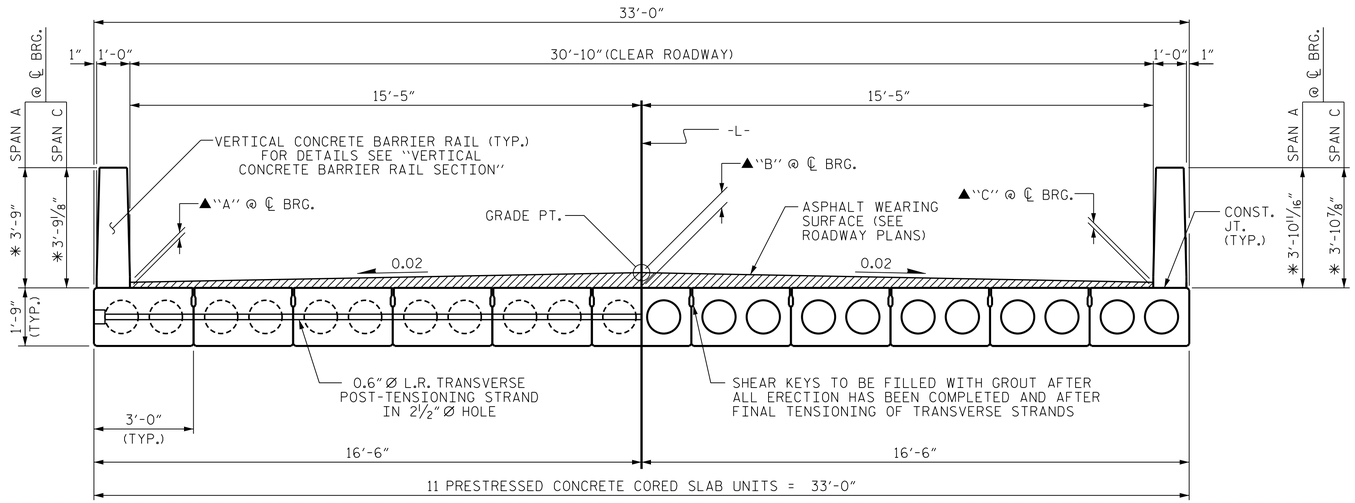

HALF SECTION
AT INTERMEDIATE DIAPHRAGMS

HALF SECTION
THROUGH VOIDS

TYPICAL SECTION

✳ - THE MAXIMUM BARRIER RAIL HEIGHT AND ASPHALT THICKNESS IS SHOWN. THE HEIGHT OF THE BARRIER RAIL AND ASPHALT THICKNESS VARIES WHILE THE TOP OF THE BARRIER RAIL FOLLOWS THE PROFILE OF THE GUTTERLINE. FOR RAIL HEIGHT DETAILS AND ASPHALT THICKNESS SEE THE "VERTICAL CONCRETE BARRIER RAIL SECTION" DETAIL.

▲ - SEE "ASPHALT WEARING SURFACE THICKNESS" DETAIL.

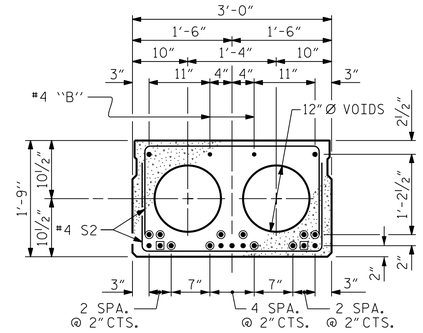

INTERIOR SLAB SECTION (35' UNIT)

(9 STRANDS REQUIRED)

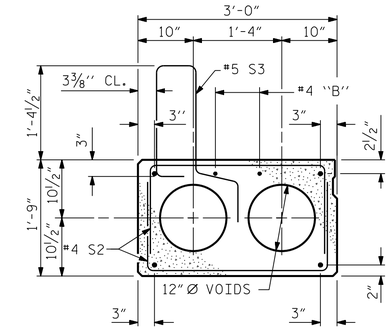

EXT. SLAB SECTION

(FOR PRESTRESSED STRAND LAYOUT, SEE INTERIOR SLAB SECTION.)

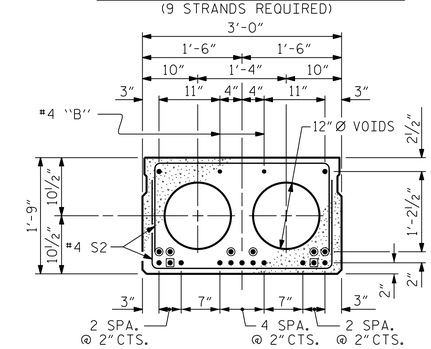

INTERIOR SLAB SECTION (40' UNIT)

(13 STRANDS REQUIRED)

0.6" Ø LOW RELAXATION STRAND LAYOUT

▲ BOND SHALL BE BROKEN ON THESE STRANDS FOR A DISTANCE OF 6'-0" FROM END OF CORED SLAB UNIT. SEE STANDARD SPECIFICATIONS, ARTICLE 1078-7.

◉ BOND SHALL BE BROKEN ON THESE STRANDS FOR A DISTANCE OF 2'-0" FROM END OF CORED SLAB UNIT. SEE STANDARD SPECIFICATIONS, ARTICLE 1078-7.

◉ OPTIONAL FULL LENGTH DEBONDED STRANDS. THESE STRANDS ARE NOT REQUIRED. IF THE FABRICATOR CHOOSES TO INCLUDE THESE STRANDS IN THE CORED SLAB UNIT, THE STRANDS SHALL BE DEBONDED FOR THE FULL LENGTH OF THE UNIT AT NO ADDITIONAL COST. SEE STANDARD SPECIFICATIONS, ARTICLE 1078-7.

DEBONDING LEGEND

FIXED END

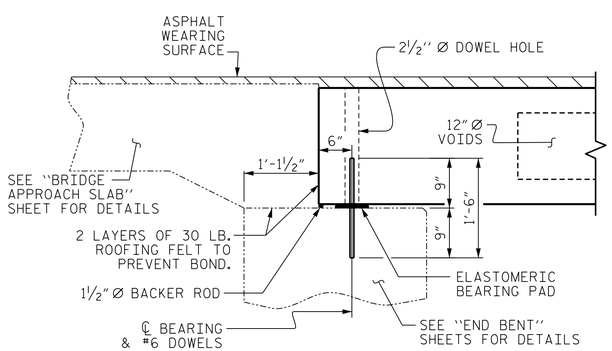

SECTION AT END BENT

FIXED END FIXED END

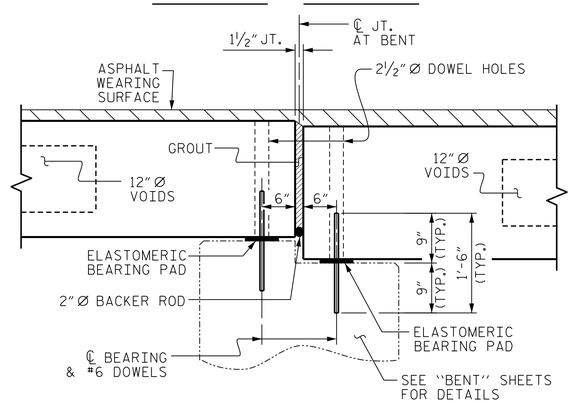

SECTION AT BENT

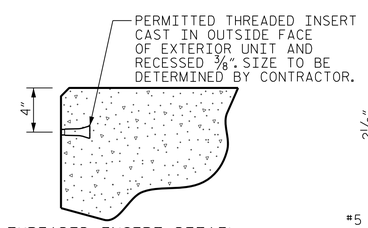

THREADED INSERT DETAIL

END ELEVATION

SHOWING PLACEMENT OF DOUBLE STIRRUPS AND LOCATION OF DOWEL HOLES. (STRAND LAYOUT NOT SHOWN.) INTERIOR SLAB UNIT SHOWN-EXTERIOR SLAB UNIT SIMILAR EXCEPT SHEAR KEY LOCATION.

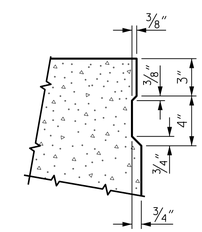

SHEAR KEY DETAIL

NOTE: OMIT SHEAR KEY ON OUTSIDE FACE OF EXTERIOR CORED SLABS.

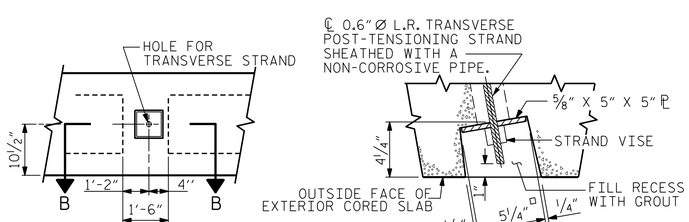

ELEVATION VIEW

SECTION B-B

GROUTED RECESS AT END OF POST-TENSIONED STRAND OF CORED SLABS

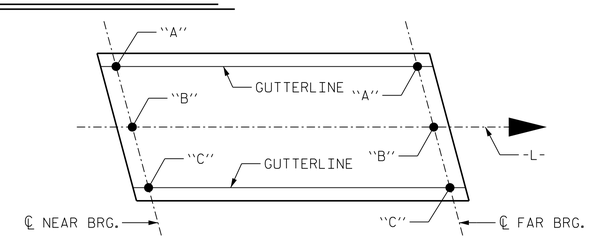

ASPHALT WEARING SURFACE THICKNESS

NOTE: AWS THICKNESS INCLUDES IMPACT OF SAG VERTICAL CURVE AND BRIDGE SKEW.

	SPAN A		SPAN B		SPAN C	
	NEAR BRG.	FAR BRG.	NEAR BRG.	FAR BRG.	NEAR BRG.	FAR BRG.
DIM. "A"	2 3/4"	2 3/4"	3 1/2"	3 3/4"	3 1/8"	3 1/16"
DIM. "B"	6 11/16"	6 9/16"	7 7/16"	7 13/16"	7 3/16"	7 5/8"
DIM. "C"	3 13/16"	3 1/8"	3 15/16"	4 1/2"	3 7/8"	4 7/8"

PROJECT NO. 17BP.8.R.132
RANDOLPH COUNTY
STATION: 15+62.50 -L-

SHEET 1 OF 7

STATE OF NORTH CAROLINA
DEPARTMENT OF TRANSPORTATION
RALEIGH

STANDARD
3'-0" X 1'-9"
PRESTRESSED CONCRETE
CORED SLAB UNIT
75° SKEW
SPAN A AND SPAN C

NORTH CAROLINA PROFESSIONAL SEAL 24939 ENGINEER BYRON E. ATKINSON
9/4/2019

DOCUMENT NOT CONSIDERED FINAL UNLESS ALL SIGNATURES COMPLETED

MI ENGINEERING
1011 SCHAUB DRIVE, SUITE 100
RALEIGH, NC 27606
(919) 851-6606
FIRM PE NUMBER : P-0671

REVISIONS								SHEET NO.
NO.	BY:	DATE:	NO.	BY:	DATE:			S-7
1			3					TOTAL SHEETS
2			4					24

ASSEMBLED BY: B.E. LANNING DATE: 04/19
CHECKED BY : B.E. ATKINSON DATE: 04/19
DESIGN ENGINEER OF RECORD: B.E. ATKINSON DATE: 04/19
DRAWN BY : DGE 5/09
CHECKED BY : BCH 6/09

9/4/2019
1:27:26 PM
User: blanning
Filename: N:\NC Bridges\M18005.02_CH Eng.Randolph 352 Br. Rep\17BP8R132\Structures\401_013_17BP8R132_SMU_CSU1_T50352.dgn

STD. NO. 21"PCS2_33_75S

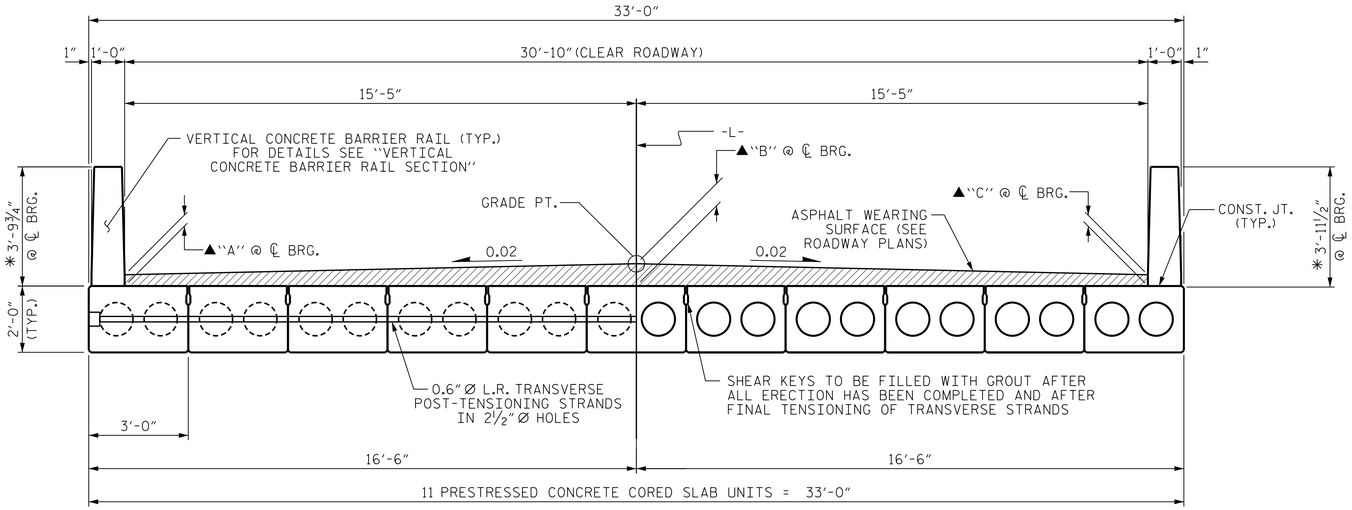

HALF SECTION
AT INTERMEDIATE DIAPHRAGMS

HALF SECTION
THROUGH VOIDS

TYPICAL SECTION

✳ - THE MAXIMUM BARRIER RAIL HEIGHT AND ASPHALT THICKNESS IS SHOWN. THE HEIGHT OF THE BARRIER RAIL AND ASPHALT THICKNESS VARIES WHILE THE TOP OF THE BARRIER RAIL FOLLOWS THE PROFILE OF THE GUTTERLINE. FOR RAIL HEIGHT DETAILS AND ASPHALT THICKNESS SEE THE "VERTICAL CONCRETE BARRIER RAIL SECTION" DETAIL.

▲ - SEE "ASPHALT WEARING SURFACE THICKNESS" DETAIL ON SHEET 1 OF 7.

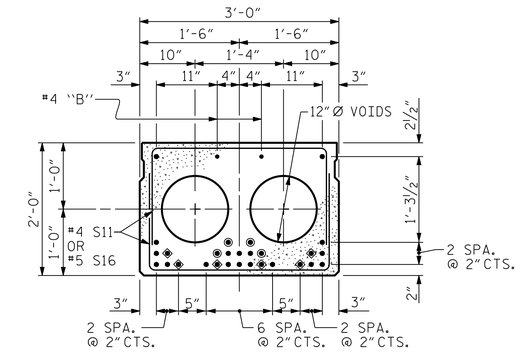

INTERIOR SLAB SECTION (65' UNIT)
(24 STRANDS REQUIRED)

0.6" Ø LOW RELAXATION STRAND LAYOUT

◈ BOND SHALL BE BROKEN ON THESE STRANDS FOR A DISTANCE OF 12'-0" FROM END OF CORED SLAB UNIT. SEE STANDARD SPECIFICATIONS, ARTICLE 1078-7.

◉ OPTIONAL FULL LENGTH DEBONDED STRANDS. THESE STRANDS ARE NOT REQUIRED. IF THE FABRICATOR CHOOSES TO INCLUDE THESE STRANDS IN THE CORED SLAB UNIT, THE STRANDS SHALL BE DEBONDED FOR THE FULL LENGTH OF THE UNIT AT NO ADDITIONAL COST. SEE STANDARD SPECIFICATIONS, ARTICLE 1078-7.

DEBONDING LEGEND

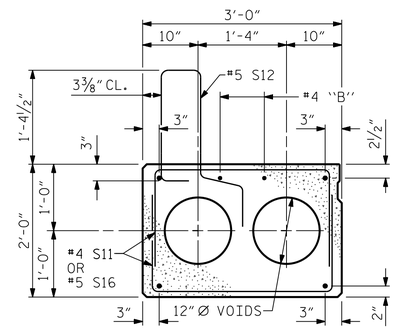

EXTERIOR SLAB SECTION

(FOR PRESTRESSED STRAND LAYOUT, SEE INTERIOR SLAB SECTION.)

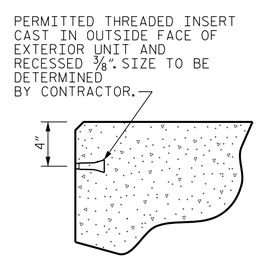

THREADED INSERT DETAIL

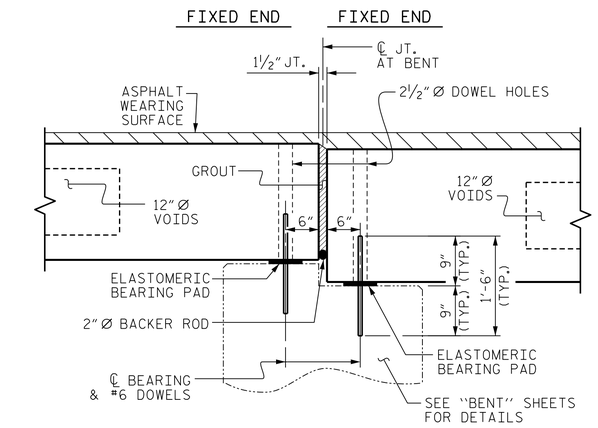

SECTION AT BENT

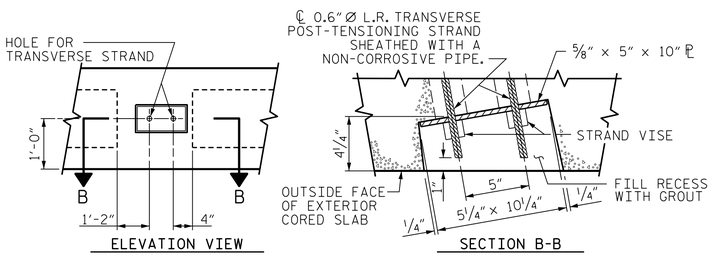

GROUTED RECESS AT END OF POST-TENSIONED STRAND CORED SLABS

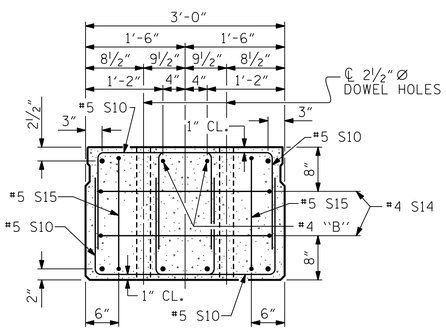

END ELEVATION

SHOWING PLACEMENT OF DOUBLE STIRRUPS AND LOCATION OF DOWEL HOLES. (STRAND LAYOUT NOT SHOWN.) INTERIOR SLAB UNIT SHOWN-EXTERIOR SLAB UNIT SIMILAR EXCEPT SHEAR KEY LOCATION.

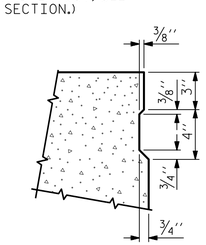

SHEAR KEY DETAIL

NOTE: OMIT SHEAR KEY ON OUTSIDE FACE OF EXTERIOR CORED SLABS.

NORTH CAROLINA PROFESSIONAL SEAL 24939 ENGINEER BYRON E. ATKINSON
9/4/2019

PROJECT NO. 17BP.8.R.132
RANDOLPH COUNTY
STATION: 15+62.50 -L-

SHEET 2 OF 7

STATE OF NORTH CAROLINA
DEPARTMENT OF TRANSPORTATION
RALEIGH

STANDARD
3'-0" X 2'-0"
PRESTRESSED CONCRETE CORED SLAB UNIT
SPAN B

DOCUMENT NOT CONSIDERED FINAL UNLESS ALL SIGNATURES COMPLETED

MI ENGINEERING
1011 SCHAUB DRIVE, SUITE 100
RALEIGH, NC 27606
(919) 851-6606
FIRM PE NUMBER : P-0671

REVISIONS							SHEET NO.
NO.	BY:	DATE:	NO.	BY:	DATE:		S-8
1			3				TOTAL SHEETS
2			4				24

ASSEMBLED BY:	B.E. LANNING	DATE:	04/19
CHECKED BY :	B.E. ATKINSON	DATE:	04/19
DESIGN ENGINEER OF RECORD:	B.E. ATKINSON	DATE:	04/19
DRAWN BY : MAA 6/10	REV. 9/14	MAA/TMG	
CHECKED BY : MKT 7/10			

STD. NO. 24PCS4_33_75S

9/4/2019
11:27:28 PM
User: blanning
Filename: N:\NC Bridges\MIB005.02_CH Eng_Randolph 352 Br. Rep\17BP8R132\Structures\401_015_17BP8R132_SMU_CSU2_750352.dgn

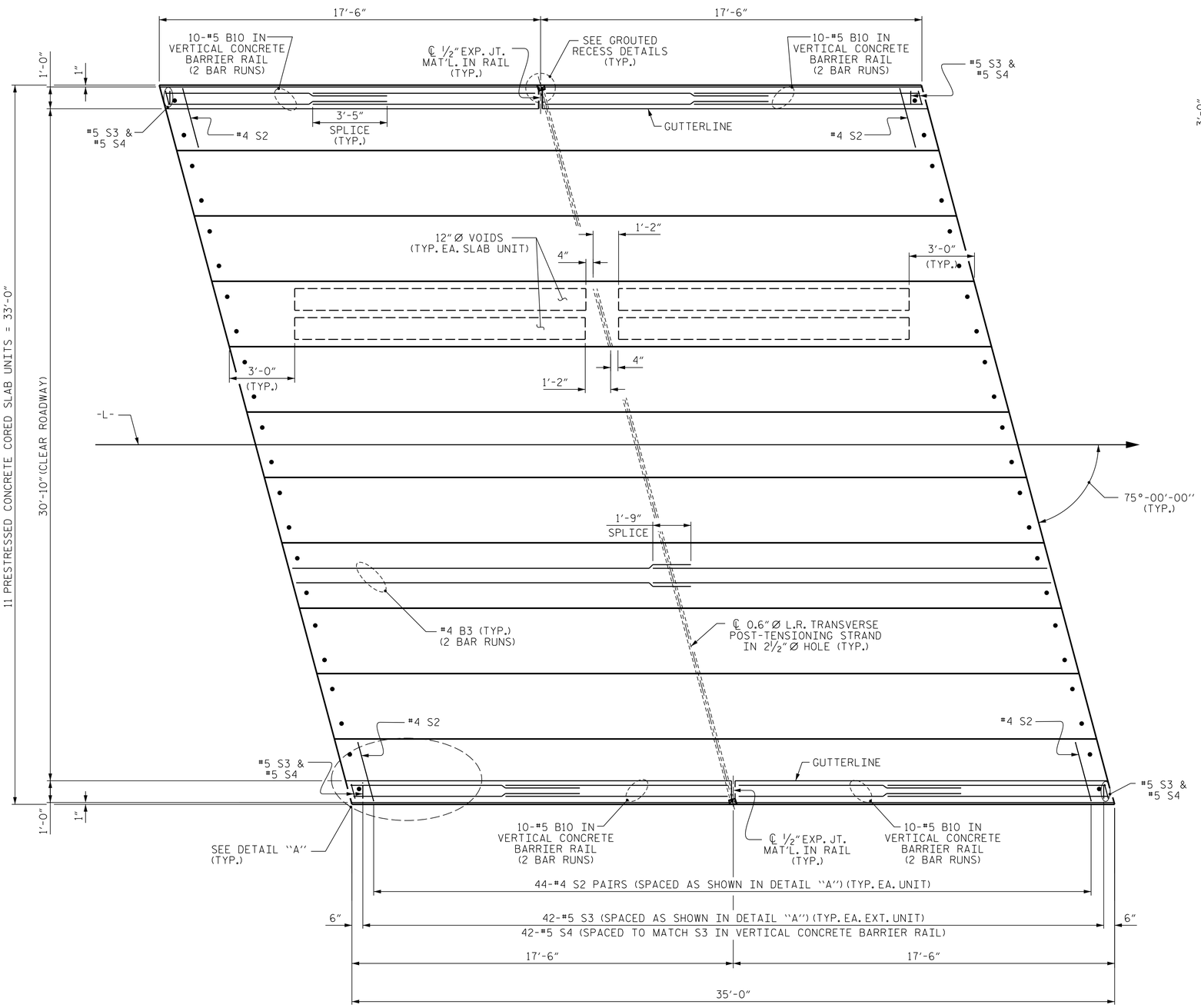

PLAN OF UNIT

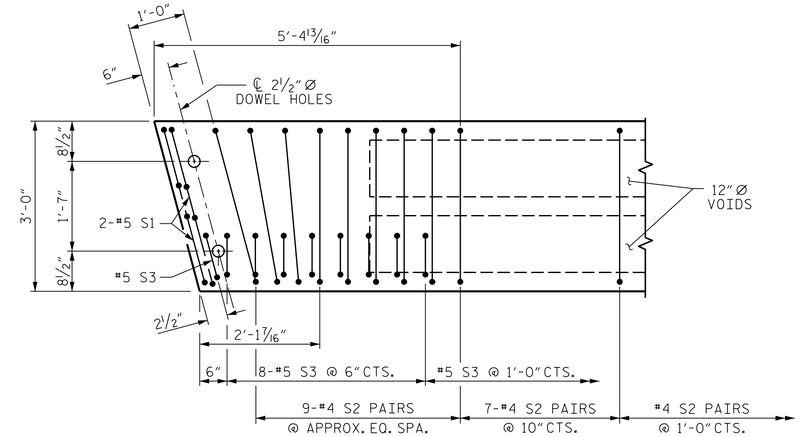

DETAIL "A"

(SIMILAR EACH END OF UNIT)
NOTE: EXTERIOR UNIT SHOWN - INTERIOR UNIT SIMILAR EXCEPT OMIT #5 S3 BARS.

PROJECT NO. 17BP.8.R.132
RANDOLPH COUNTY
STATION: 15+62.50 -L-

SHEET 3 OF 7

STATE OF NORTH CAROLINA
DEPARTMENT OF TRANSPORTATION
RALEIGH

PLAN OF 35' UNIT 30'-10" CLEAR ROADWAY 75° SKEW SPAN A

NORTH CAROLINA PROFESSIONAL SEAL 24939 ENGINEER BYRON E. ATKINSON
9/4/2019

DOCUMENT NOT CONSIDERED FINAL UNLESS ALL SIGNATURES COMPLETED

MI ENGINEERING
1011 SCHAUB DRIVE, SUITE 100
RALEIGH, NC 27606
(919) 851-6606
FIRM PE NUMBER : P-0671

REVISIONS								SHEET NO.
NO.	BY:	DATE:	NO.	BY:	DATE:			S-9
1			3					TOTAL SHEETS
2			4					24

ASSEMBLED BY:	B.E. LANNING	DATE:	04/19
CHECKED BY :	B.E. ATKINSON	DATE:	04/19
DESIGN ENGINEER OF RECORD:	B.E. ATKINSON	DATE:	04/19

DRAWN BY :	DGE	3/09	REV. 12/5/11	MAA/AAC
CHECKED BY :	BCH	3/09	REV. 8/14	MAA/TMG

STD. NO. 21" PCS_33_75S_35L

9/4/2019
1:27:30 PM
User: blanning
Filename: N:\NC Bridges\MI8005.02_CH Eng.Randolph 352 Br. Rep\17BP8R132\Structures\401_017_17BP8R132_SMU_CSU3_750352.dgn

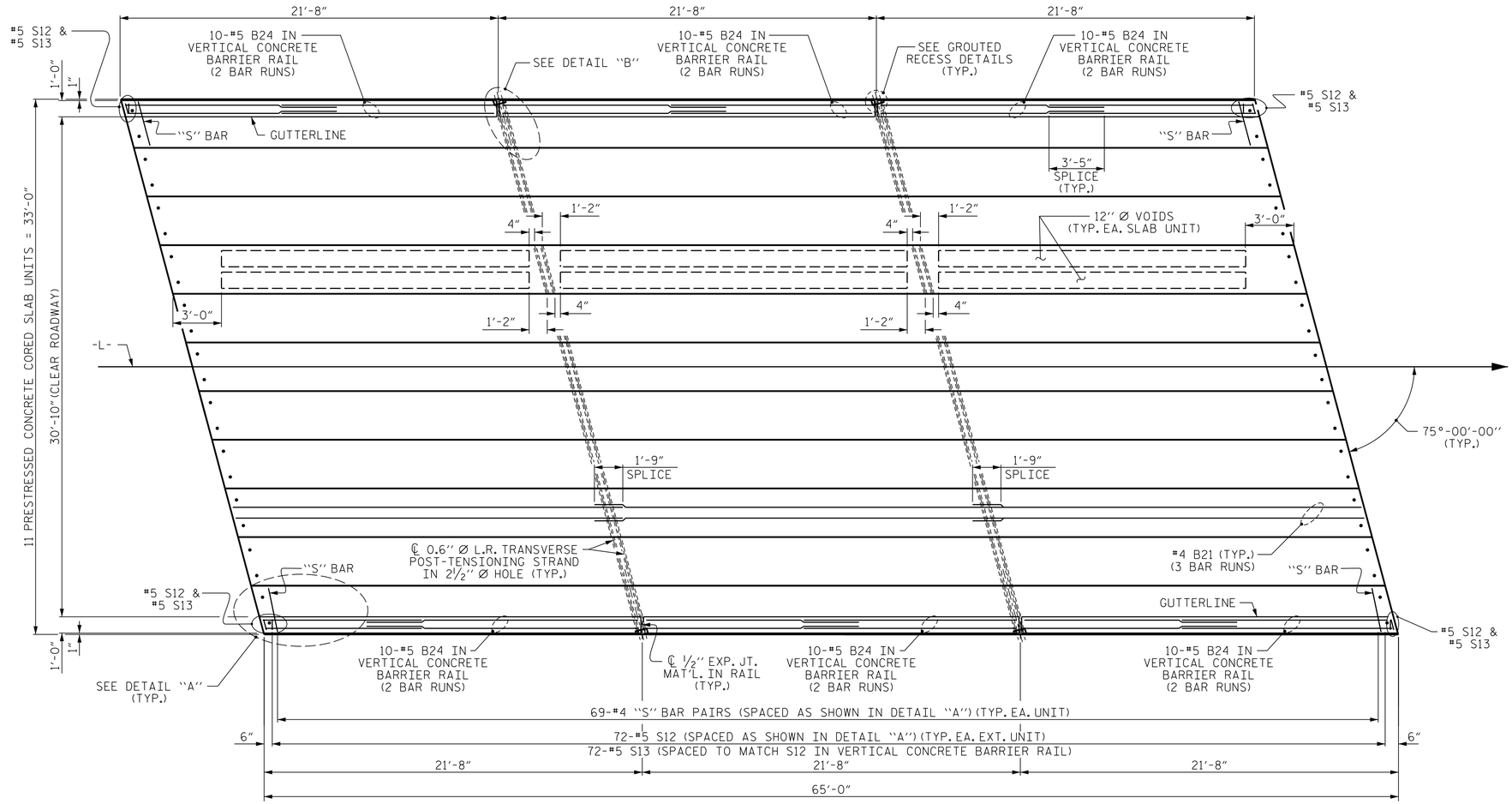

PLAN OF UNIT

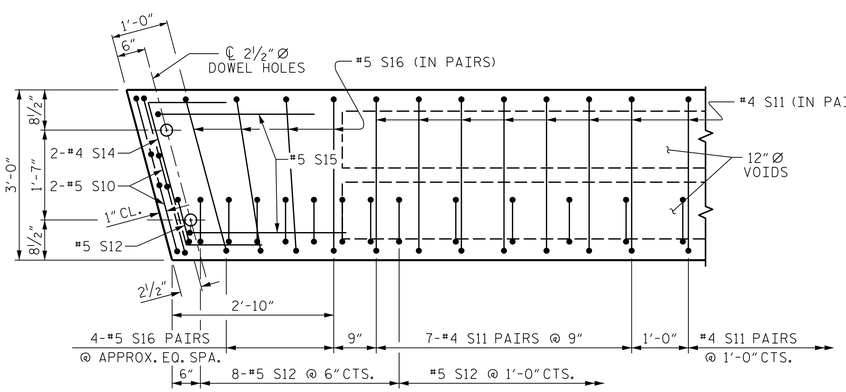

DETAIL "A"

(SIMILAR EACH END OF UNIT)
NOTE: EXTERIOR UNIT SHOWN - INTERIOR UNIT SIMILAR EXCEPT OMIT #5 S12 BARS.

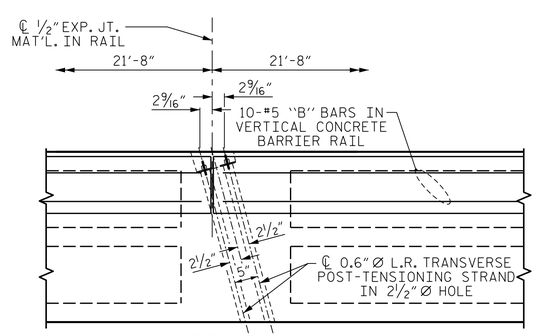

DETAIL "B"

#4 S11 BARS MAY BE SHIFTED AS NECESSARY TO MAINTAIN 1" CLEAR TO GROUTED RECESS AND 2½" Ø TRANSVERSE POST-TENSIONING STRAND HOLES

PROJECT NO. 17BP.8.R.132
RANDOLPH COUNTY
STATION: 15+62.50 -L-

SHEET 4 OF 7

STATE OF NORTH CAROLINA
DEPARTMENT OF TRANSPORTATION
RALEIGH

PLAN OF 65' UNIT 30'-10" CLEAR ROADWAY 75° SKEW SPAN B

NORTH CAROLINA PROFESSIONAL SEAL 24939 ENGINEER BYRON E. ATKINSON
9/4/2019

DOCUMENT NOT CONSIDERED FINAL UNLESS ALL SIGNATURES COMPLETED

MI ENGINEERING
1011 SCHAUB DRIVE, SUITE 100
RALEIGH, NC 27606
(919) 851-6606
FIRM PE NUMBER : P-0671

REVISIONS							SHEET NO.
NO.	BY:	DATE:	NO.	BY:	DATE:		S-10
1			3				TOTAL SHEETS
2			4				24

ASSEMBLED BY:	B.E. LANNING	DATE:	04/19
CHECKED BY :	B.E. ATKINSON	DATE:	04/19
DESIGN ENGINEER OF RECORD:	B.E. ATKINSON	DATE:	04/19
DRAWN BY : MAA 6/10	REV. 12/5/11	MAA/AAC	
CHECKED BY : MKT 7/10	REV. 8/14	MAA/TMG	

9/4/2019
1:27:32 PM
User: blanning
Filename: N:\NC Bridges\MI8005.02_CH Eng.Randolph 352 Br. Rep\17BP8R132\Structures\401_019_17BP8R132_SMU_CSU4_750352.dgn

STD. NO. 24PCS_33_75S_65L

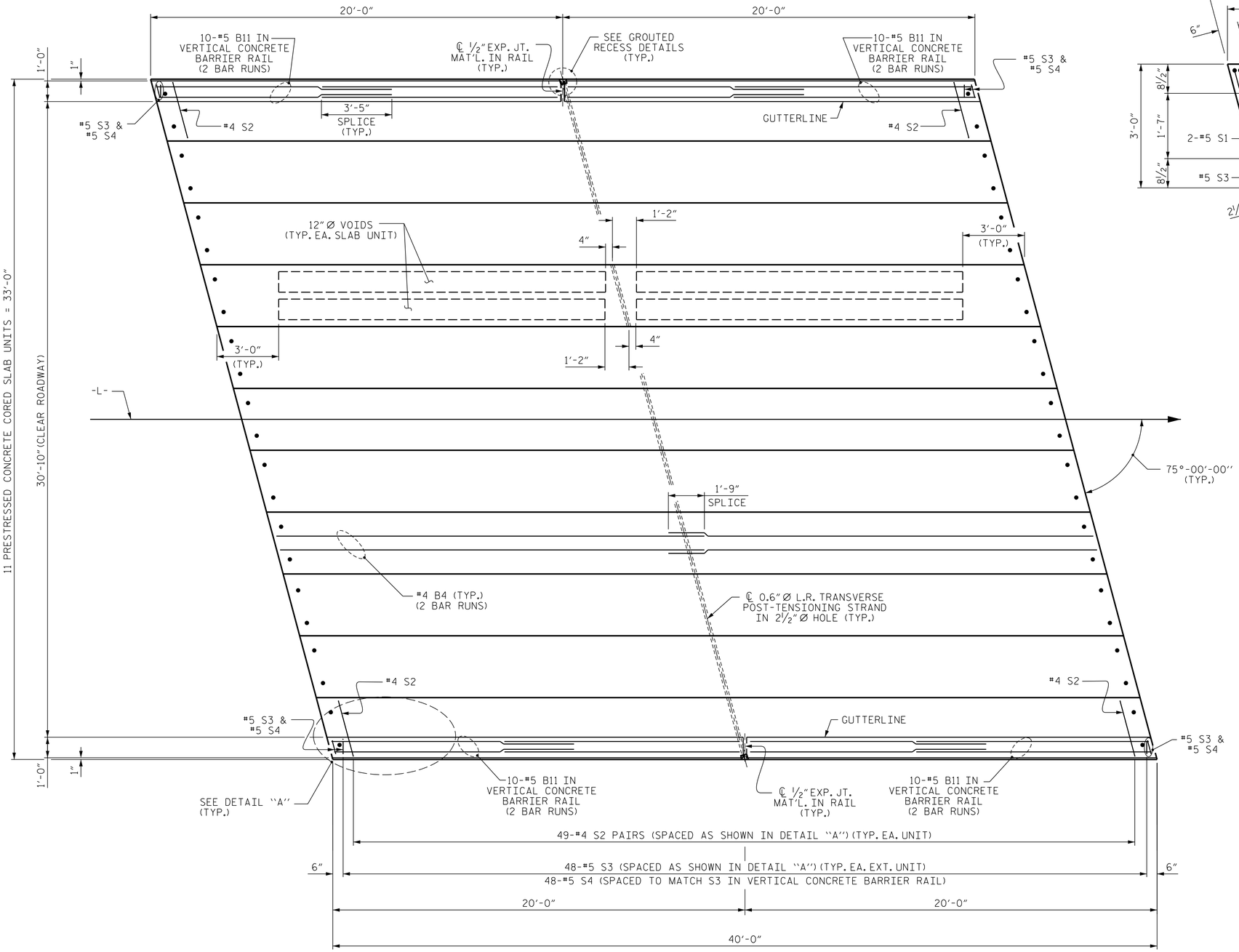

PLAN OF UNIT

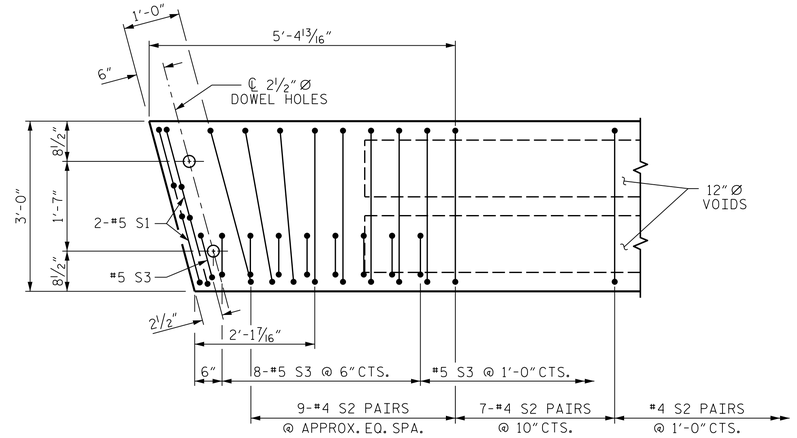

DETAIL "A"

(SIMILAR EACH END OF UNIT)
NOTE: EXTERIOR UNIT SHOWN - INTERIOR UNIT SIMILAR EXCEPT OMIT #5 S3 BARS.

PROJECT NO. 17BP.8.R.132
RANDOLPH COUNTY
STATION: 15+62.50 -L-

SHEET 5 OF 7

STATE OF NORTH CAROLINA
DEPARTMENT OF TRANSPORTATION
RALEIGH

PLAN OF 40' UNIT
30'-10" CLEAR ROADWAY
75° SKEW
SPAN C

NORTH CAROLINA PROFESSIONAL SEAL 24939 ENGINEER BYRON E. ATKINSON
9/4/2019

DOCUMENT NOT CONSIDERED FINAL UNLESS ALL SIGNATURES COMPLETED

MI ENGINEERING
1011 SCHAUB DRIVE, SUITE 100
RALEIGH, NC 27606
(919) 851-6606
FIRM PE NUMBER : P-0671

REVISIONS						
NO.	BY:	DATE:	NO.	BY:	DATE:	
1			3			
2			4			

SHEET NO. S-11
TOTAL SHEETS 24

ASSEMBLED BY:	B.E. LANNING	DATE: 04/19			
CHECKED BY :	B.E. ATKINSON	DATE: 04/19			
DESIGN ENGINEER OF RECORD:	B.E. ATKINSON	DATE: 04/19			
DRAWN BY : DGE	3/09	REV. 12/5/11	MAA/AAC		
CHECKED BY : BCH	3/09	REV. 8/14	MAA/TMG		

STD. NO. 21" PCS_33_75S_40L

9/4/2019
12:7:34 PM
User: blanning
Filename: N:\NC Bridges\MI8005.02_CH Eng_Randolph 352 Br. Rep\17BP8R132\Structures\401_021_17BP8R132_SMU_CSU5_750352.dgn

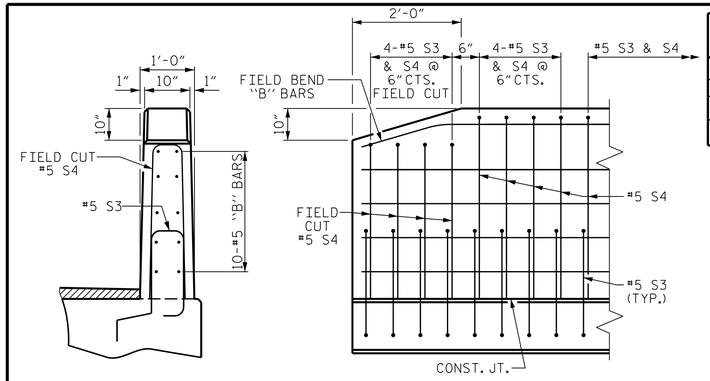

END VIEW

SIDE VIEW

END OF RAIL DETAILS

CONCRETE RELEASE STRENGTH	
UNIT	PSI
35' UNIT	4000
40' UNIT	4000

CORED SLABS REQUIRED	NUMBER	LENGTH	TOTAL LENGTH
35' UNIT			
EXTERIOR C.S.	2	35'-0"	70'-0"
INTERIOR C.S.	9	35'-0"	315'-0"
TOTAL	11		385'-0"

CORED SLABS REQUIRED	NUMBER	LENGTH	TOTAL LENGTH
40' UNIT			
EXTERIOR C.S.	2	40'-0"	80'-0"
INTERIOR C.S.	9	40'-0"	360'-0"
TOTAL	11		440'-0"

BAR TYPES

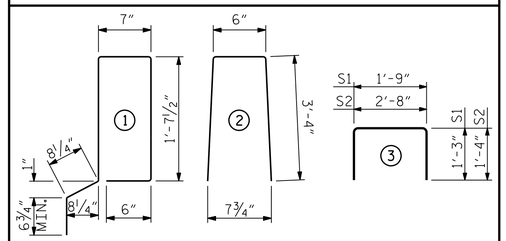

ALL BAR DIMENSIONS ARE OUT TO OUT.

DEAD LOAD DEFLECTION AND CAMBER	3'-0" x 1'-9"
30' CORED SLAB UNIT	0.6" Ø L.R. STRAND
CAMBER (SLAB ALONE IN PLACE)	¼" ↑
DEFLECTION DUE TO SUPERIMPOSED DEAD LOAD ✱✱	⅛" ↓
FINAL CAMBER	⅛" ↑

✱✱ INCLUDES FUTURE WEARING SURFACE

DEAD LOAD DEFLECTION AND CAMBER	3'-0" x 1'-9"
40' CORED SLAB UNIT	0.6" Ø L.R. STRAND
CAMBER (SLAB ALONE IN PLACE)	⅞" ↑
DEFLECTION DUE TO SUPERIMPOSED DEAD LOAD ✱✱	3/16" ↓
FINAL CAMBER	11/16" ↑

✱✱ INCLUDES FUTURE WEARING SURFACE

NOTES

ALL PRESTRESSING STRANDS SHALL BE 7-WIRE LOW RELAXATION GRADE 270 STRANDS AND SHALL CONFORM TO AASHTO M203 EXCEPT FOR SAMPLING REQUIREMENTS WHICH SHALL BE IN ACCORDANCE WITH THE STANDARD SPECIFICATIONS.

ALL REINFORCING STEEL CAST WITH THE CORED SLAB SECTIONS SHALL BE GRADE 60 AND SHALL BE INCLUDED IN THE UNIT PRICE BID FOR PRESTRESSED CONCRETE CORED SLABS.

RECESSES FOR TRANSVERSE STRANDS SHALL BE GROUTED AFTER THE TENSIONING OF THE STRANDS.

THE 2½" Ø DOWEL HOLES AT FIXED ENDS OF SLAB SECTIONS SHALL BE FILLED WITH NON-SHRINK GROUT.

THE BACKER RODS SHALL CONFORM TO THE REQUIREMENTS OF TYPE M BOND BREAKER. SEE SECTION 1028 OF THE STANDARD SPECIFICATIONS.

WHEN CORED SLABS ARE CAST, AN INTERNAL HOLD-DOWN SYSTEM SHALL BE EMPLOYED TO PREVENT VOIDS FROM RISING OR MOVING SIDEWAYS. AT LEAST SIX WEEKS PRIOR TO CASTING CORED SLABS, THE CONTRACTOR SHALL SUBMIT TO THE ENGINEER FOR REVIEW AND COMMENT, DETAILED DRAWINGS OF THE PROPOSED HOLD-DOWN SYSTEM. IN ADDITION TO STRUCTURAL DETAILS, LOCATION AND SPACING OF THE HOLD-DOWNS SHALL BE INDICATED.

ALL REINFORCING STEEL IN THE VERTICAL CONCRETE BARRIER RAIL SHALL BE EPOXY COATED.

PRESTRESSING STRANDS SHALL BE CUT FLUSH WITH THE CORED SLAB UNIT ENDS.

APPLY EPOXY PROTECTIVE COATING TO CORED SLAB UNIT ENDS.

GROOVED CONTRACTION JOINTS, ½" IN DEPTH, SHALL BE TOOLED IN ALL EXPOSED FACES OF THE BARRIER RAIL AND IN ACCORDANCE WITH ARTICLE 825-10(B) OF THE STANDARD SPECIFICATIONS. A CONTRACTION JOINT SHALL BE LOCATED AT EACH THIRD POINT BETWEEN BARRIER RAIL EXPANSION JOINTS. ONLY ONE CONTRACTION JOINT IS REQUIRED AT MIDPOINT OF BARRIER RAIL SEGMENTS LESS THAN 20 FEET IN LENGTH AND NO CONTRACTION JOINTS ARE REQUIRED FOR THOSE SEGMENTS LESS THAN 10 FEET IN LENGTH.

FLAME CUTTING OF THE TRANSVERSE POST-TENSIONING STRAND IS NOT ALLOWED.

THE TRANSFER OF LOAD FROM THE ANCHORAGES TO THE CORED SLAB UNIT SHALL BE DONE WHEN THE CONCRETE HAS REACHED A COMPRESSIVE STRENGTH OF NOT LESS THAN THE REQUIRED STRENGTH SHOWN IN THE "CONCRETE RELEASE STRENGTH" TABLE.

FOR GROUT FOR STRUCTURES, SEE SPECIAL PROVISIONS.

THE PERMITTED THREADED INSERTS ARE DETAILED AS AN OPTION FOR THE CONTRACTOR TO ATTACH FALSEWORK AND FORMWORK DURING CONSTRUCTION.

THE PERMITTED THREADED INSERTS IN THE EXTERIOR UNITS SHALL BE SIZED BY THE CONTRACTOR, SPACED AT 4'-0" CENTERS AND GALVANIZED IN ACCORDANCE WITH SECTION 1076 OF THE STANDARD SPECIFICATIONS. STAINLESS STEEL THREADED INSERTS MAY BE USED AS AN ALTERNATE.

THE PERMITTED THREADED INSERTS SHALL BE GROUTED BY THE CONTRACTOR IMMEDIATELY FOLLOWING REMOVAL OF THE FALSEWORK.

THE COST OF THE PERMITTED THREADED INSERTS SHALL BE INCLUDED IN THE PRICE BID FOR THE PRECAST UNITS.

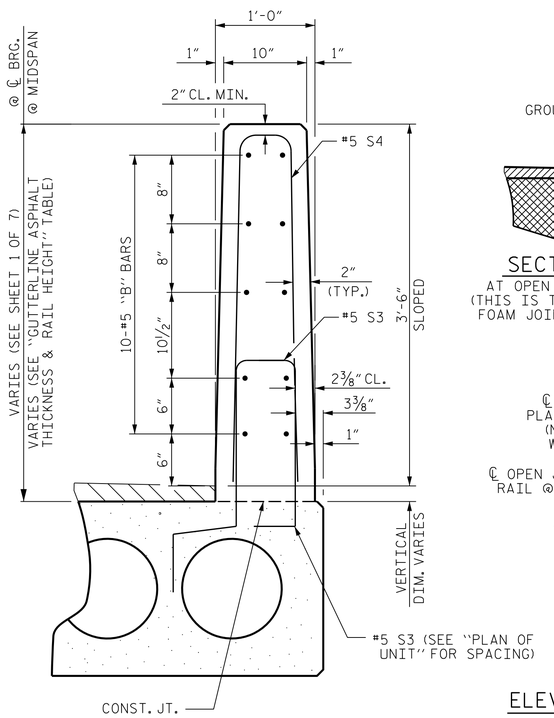

VERTICAL CONCRETE BARRIER RAIL SECTION

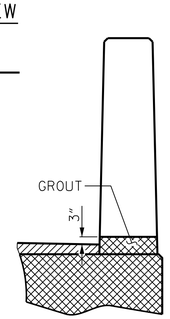

SECTION T-T

AT OPEN JOINT AT BENT (THIS IS TO BE USED WHERE FOAM JOINT IS NOT USED)

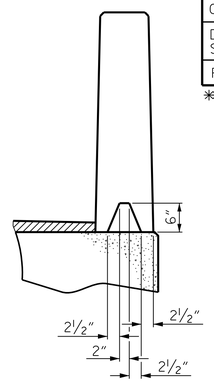

SECTION S-S

AT DAM IN OPEN JOINT (THIS IS TO BE USED ONLY WHEN SLIP FORM IS USED)

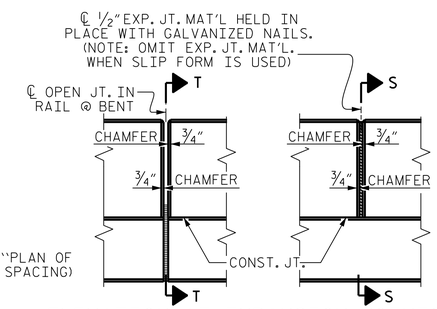

ELEVATION AT EXPANSION JOINTS

BILL OF MATERIAL FOR VERTICAL CONCRETE BARRIER RAIL						
BAR	BARS PER PAIR OF EXTERIOR UNITS	TOTAL NO.	SIZE	TYPE	LENGTH	WEIGHT
	35' UNIT					
✱B10	80	80	#5	STR	10'-5"	869
✱S4	88	88	#5	2	7'-2"	658
✱EPOXY COATED REINFORCING STEEL				LBS.		1527
CLASS AA CONCRETE				CU.YDS.		9.2
TOTAL VERTICAL CONCRETE BARRIER RAIL				LN. FT.		70.25

BILL OF MATERIAL FOR VERTICAL CONCRETE BARRIER RAIL						
BAR	BARS PER PAIR OF EXTERIOR UNITS	TOTAL NO.	SIZE	TYPE	LENGTH	WEIGHT
	40' UNIT					
✱B11	80	80	#5	STR	11'-8"	973
✱S4	100	100	#5	2	7'-2"	747
✱EPOXY COATED REINFORCING STEEL				LBS.		1720
CLASS AA CONCRETE				CU.YDS.		10.6
TOTAL VERTICAL CONCRETE BARRIER RAIL				LN. FT.		80.25

BILL OF MATERIAL FOR ONE 35' CORED SLAB UNIT							
				EXTERIOR UNIT		INTERIOR UNIT	
BAR	NUMBER	SIZE	TYPE	LENGTH	WEIGHT	LENGTH	WEIGHT
B3	4	#4	STR	18'-3"	49	18'-3"	49
S1	8	#5	3	4'-3"	35	4'-3"	35
S2	88	#4	3	5'-4"	314	5'-4"	314
✱S3	44	#5	1	5'-7"	256		
REINFORCING STEEL			LBS.		398		398
✱EPOXY COATED REINFORCING STEEL			LBS.		256		
5000 P.S.I. CONCRETE			CU. YDS.		5.2		5.2
0.6" Ø L.R. STRANDS			No.		9		9

BILL OF MATERIAL FOR ONE 40' CORED SLAB UNIT							
				EXTERIOR UNIT		INTERIOR UNIT	
BAR	NUMBER	SIZE	TYPE	LENGTH	WEIGHT	LENGTH	WEIGHT
B4	4	#4	STR	20'-9"	55	20'-9"	55
S1	8	#5	3	4'-3"	35	4'-3"	35
S2	98	#4	3	5'-4"	349	5'-4"	349
✱S3	50	#5	1	5'-7"	291		
REINFORCING STEEL			LBS.		439		439
✱EPOXY COATED REINFORCING STEEL			LBS.		291		
5000 P.S.I. CONCRETE			CU. YDS.		5.8		5.8
0.6" Ø L.R. STRANDS			No.		13		13

GRADE 270 STRANDS	0.6" Ø L.R.
AREA (SQUARE INCHES)	0.217
ULTIMATE STRENGTH (LBS. PER STRAND)	58,600
APPLIED PRESTRESS (LBS. PER STRAND)	43,950

GUTTERLINE ASPHALT THICKNESS & RAIL HEIGHT				
	ASPHALT OVERLAY THICKNESS @ MID-SPAN ⊛		RAIL HEIGHT @ MID-SPAN ⊛	
	LEFT GUTTER	RIGHT GUTTER	LEFT RAIL	RIGHT RAIL
SPAN A	2⅝"	3"	3'-8⅞"	3'-10⁹⁄₁₆"
SPAN C	1¾"	3¹⁄₁₆"	3'-8⁷⁄₁₆"	3'-10³⁄₁₆"

⊛ INCLUDES IMPACT OF SAG VERTICAL CURVE AND BRIDGE SKEW.

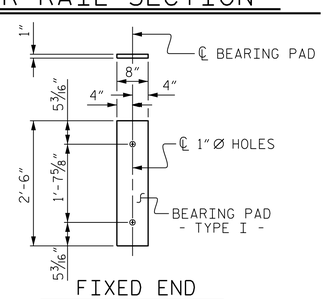

FIXED END

(TYPE I - 44 REQ'D.)

ELASTOMERIC BEARING DETAILS

ELASTOMER IN ALL BEARINGS SHALL BE 60 DUROMETER HARDNESS.

PROJECT NO. 17BP.8.R.132

RANDOLPH COUNTY

STATION: 15+62.50 -L-

SHEET 6 OF 7

STATE OF NORTH CAROLINA
DEPARTMENT OF TRANSPORTATION
RALEIGH

STANDARD
3'-0" X 1'-9"
PRESTRESSED CONCRETE
CORED SLAB UNIT
75° SKEW
SPAN A AND SPAN C

NORTH CAROLINA PROFESSIONAL SEAL 24939 ENGINEER BYRON E. ATKINSON
9/4/2019

DOCUMENT NOT CONSIDERED FINAL UNLESS ALL SIGNATURES COMPLETED

MI ENGINEERING
1011 SCHAUB DRIVE, SUITE 100
RALEIGH, NC 27606
(919) 851-6606
FIRM PE NUMBER : P-0671

REVISIONS								SHEET NO.
NO.	BY:	DATE:	NO.	BY:	DATE:			S-12
1			3					TOTAL SHEETS
2			4					24

STD. NO. 21" PCS3_33_75S

ASSEMBLED BY:	B.E. LANNING	DATE:	04/19
CHECKED BY :	B.E. ATKINSON	DATE:	04/19
DESIGN ENGINEER OF RECORD:	B.E. ATKINSON	DATE:	04/19
DRAWN BY : DGE 5/09	REV. 5/18	MAA/THC	
CHECKED BY : BCH 6/09			

9/4/2019
1:21:36 PM
User: blanning
Filename: N:\NC Bridges\M18005.02_CH Eng_Randolph 352 Br. Rep\17BP8R132\Structures\401_023_17BP8R132_SMU_CSU6_750352.dgn

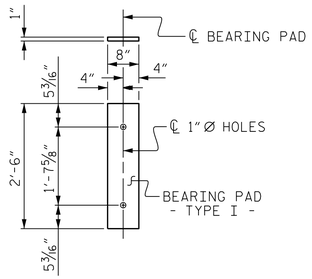

FIXED END
(TYPE I - 22 REQ'D.)

ELASTOMERIC BEARING DETAILS

ELASTOMER IN ALL BEARINGS SHALL BE 60 DUROMETER HARDNESS.

CORED SLABS REQUIRED

	NUMBER	LENGTH	TOTAL LENGTH
65' UNIT			
EXTERIOR C.S.	2	65'-0"	130'-0"
INTERIOR C.S.	9	65'-0"	585'-0"
TOTAL	11		715'-0"

DEAD LOAD DEFLECTION AND CAMBER

	3'-0" x 2'-0"
65' CORED SLAB UNIT	0.6" Ø L.R. STRAND
CAMBER (SLAB ALONE IN PLACE)	1 7/8" ↑
DEFLECTION DUE TO SUPERIMPOSED DEAD LOAD **	3/4" ↓
FINAL CAMBER	1 1/8" ↑

** INCLUDES FUTURE WEARING SURFACE

CONCRETE RELEASE STRENGTH

UNIT	PSI
65' UNITS	4800

GRADE 270 STRANDS

	0.6" Ø L.R.
AREA (SQUARE INCHES)	0.217
ULTIMATE STRENGTH (LBS. PER STRAND)	58,600
APPLIED PRESTRESS (LBS. PER STRAND)	43,950

BAR TYPES

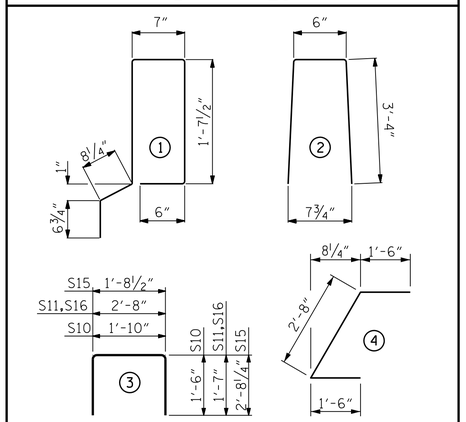

ALL BAR DIMENSIONS ARE OUT TO OUT.

GUTTERLINE ASPHALT THICKNESS & RAIL HEIGHT

	ASPHALT OVERLAY THICKNESS @ MID-SPAN ⊛		RAIL HEIGHT @ MID-SPAN ⊛	
	LEFT GUTTER	RIGHT GUTTER	LEFT RAIL	RIGHT RAIL
SPAN B	2 1/2"	2 7/8"	3'-8 5/8"	3'-10 3/8"

⊛ INCLUDES IMPACT OF SAG VERTICAL CURVE AND BRIDGE SKEW.

BILL OF MATERIAL FOR VERTICAL CONCRETE BARRIER RAIL

BAR	BARS PER PAIR OF EXTERIOR UNITS	TOTAL NO.	SIZE	TYPE	LENGTH	WEIGHT
	65' UNIT					
*B24	120	120	#5	STR	12'-10"	1606
*S13	148	148	#5	2	7'-2"	1106
* EPOXY COATED REINFORCING STEEL				LBS.		2712
CLASS AA CONCRETE				CU.YDS.		17.4
TOTAL VERTICAL CONCRETE BARRIER RAIL				LN. FT.		130.26

BILL OF MATERIAL FOR ONE 65' CORED SLAB UNIT

				EXTERIOR UNIT		INTERIOR UNIT	
BAR	NUMBER	SIZE	TYPE	LENGTH	WEIGHT	LENGTH	WEIGHT
B21	6	#4	STR	22'-10"	92	22'-10"	92
S10	8	#5	3	4'-10"	40	4'-10"	40
S11	122	#4	3	5'-10"	475	5'-10"	475
*S12	74	#5	1	5'-7"	431		
S14	4	#4	4	5'-8"	15	5'-8"	15
S15	4	#5	3	7'-1"	30	7'-1"	30
S16	16	#5	3	5'-10"	97	5'-10"	97
REINFORCING STEEL			LBS.		749		749
* EPOXY COATED REINFORCING STEEL			LBS.		431		
6000 P.S.I. CONCRETE			CU. YDS.		11.2		11.2
0.6" Ø L.R. STRANDS			No.		24		24

NOTES

ALL PRESTRESSING STRANDS SHALL BE 7-WIRE LOW RELAXATION GRADE 270 STRANDS AND SHALL CONFORM TO AASHTO M203 EXCEPT FOR SAMPLING REQUIREMENTS WHICH SHALL BE IN ACCORDANCE WITH THE STANDARD SPECIFICATIONS.

ALL REINFORCING STEEL CAST WITH THE CORED SLAB SECTIONS SHALL BE GRADE 60 AND SHALL BE INCLUDED IN THE UNIT PRICE BID FOR PRESTRESSED CONCRETE CORED SLABS.

RECESSES FOR TRANSVERSE STRANDS SHALL BE GROUTED AFTER THE TENSIONING OF THE STRANDS.

THE 2 1/2" Ø DOWEL HOLES AT FIXED ENDS OF SLAB SECTIONS SHALL BE FILLED WITH NON-SHRINK GROUT.

THE BACKER RODS SHALL CONFORM TO THE REQUIREMENTS OF TYPE M BOND BREAKER. SEE SECTION 1028 OF THE STANDARD SPECIFICATIONS.

WHEN CORED SLABS ARE CAST, AN INTERNAL HOLD-DOWN SYSTEM SHALL BE EMPLOYED TO PREVENT VOIDS FROM RISING OR MOVING SIDEWAYS. AT LEAST SIX WEEKS PRIOR TO CASTING CORED SLABS, THE CONTRACTOR SHALL SUBMIT TO THE ENGINEER FOR REVIEW AND COMMENT, DETAILED DRAWINGS OF THE PROPOSED HOLD-DOWN SYSTEM. IN ADDITION TO STRUCTURAL DETAILS, LOCATION AND SPACING OF THE HOLD-DOWNS SHALL BE INDICATED.

THE TRANSFER OF LOAD FROM THE ANCHORAGES TO THE CORED SLAB UNIT SHALL BE DONE WHEN THE CONCRETE HAS REACHED A COMPRESSIVE STRENGTH OF NOT LESS THAN THE REQUIRED STRENGTH SHOWN IN THE "CONCRETE RELEASE STRENGTH" TABLE.

ALL REINFORCING STEEL IN VERTICAL CONCRETE BARRIER RAILS SHALL BE EPOXY COATED.

PRESTRESSING STRANDS SHALL BE CUT FLUSH WITH THE CORED SLAB UNIT ENDS.

APPLY EPOXY PROTECTIVE COATING TO CORED SLAB UNIT ENDS.

GROOVED CONTRACTION JOINTS, 1/2" IN DEPTH, SHALL BE TOOLED IN ALL EXPOSED FACES OF THE BARRIER RAIL AND IN ACCORDANCE WITH ARTICLE 825-10(B) OF THE STANDARD SPECIFICATIONS. A CONTRACTION JOINT SHALL BE LOCATED AT EACH THIRD POINT BETWEEN BARRIER RAIL EXPANSION JOINTS. ONLY ONE CONTRACTION JOINT IS REQUIRED AT MIDPOINT OF BARRIER RAIL SEGMENTS LESS THAN 20 FEET IN LENGTH AND NO CONTRACTION JOINTS ARE REQUIRED FOR THOSE SEGMENTS LESS THAN 10 FEET IN LENGTH.

FLAME CUTTING OF THE TRANSVERSE POST-TENSIONING STRAND IS NOT ALLOWED.

MAINTAIN A SYMMETRIC TENSION FORCE BETWEEN EACH PAIR OF TRANSVERSE POST TENSIONING STRANDS IN THE DIAPHRAGM.

THE #4 S11 STIRRUPS MAY BE SHIFTED AS NECESSARY TO MAINTAIN 1" CLEAR TO THE GROUTED RECESS.

FOR GROUT FOR STRUCTURES, SEE SPECIAL PROVISIONS.

THE PERMITTED THREADED INSERTS ARE DETAILED AS AN OPTION FOR THE CONTRACTOR TO ATTACH FALSEWORK AND FORMWORK DURING CONSTRUCTION.

THE PERMITTED THREADED INSERTS IN THE EXTERIOR UNITS SHALL BE SIZED BY THE CONTRACTOR, SPACED AT 4'-0" CENTERS AND GALVANIZED IN ACCORDANCE WITH SECTION 1076 OF THE STANDARD SPECIFICATIONS. STAINLESS STEEL THREADED INSERTS MAY BE USED AS AN ALTERNATE.

THE PERMITTED THREADED INSERTS SHALL BE GROUTED BY THE CONTRACTOR IMMEDIATELY FOLLOWING REMOVAL OF THE FALSEWORK.

THE COST OF THE PERMITTED THREADED INSERTS SHALL BE INCLUDED IN THE PRICE BID FOR THE PRECAST UNITS.

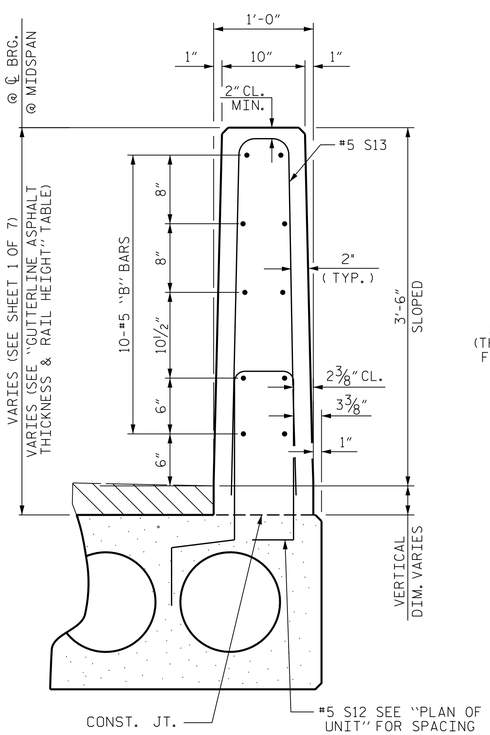

SECTION THRU RAIL

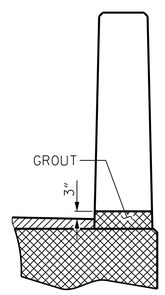

SECTION T-T
AT OPEN JOINT AT BENT
(THIS IS TO BE USED WHERE FOAM JOINT IS NOT USED)

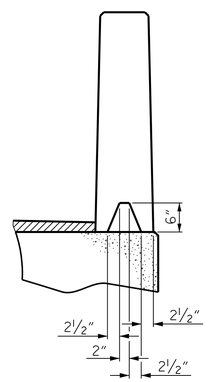

SECTION S-S
AT DAM IN OPEN JOINT
(THIS IS TO BE USED ONLY WHEN SLIP FORM IS USED)

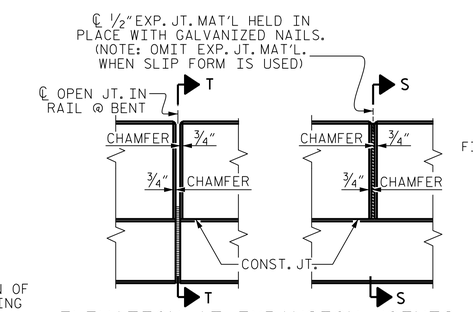

ELEVATION AT EXPANSION JOINTS

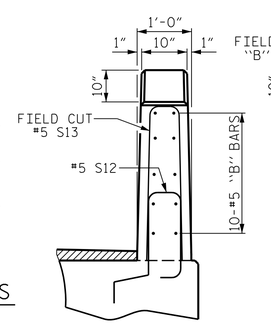

END VIEW

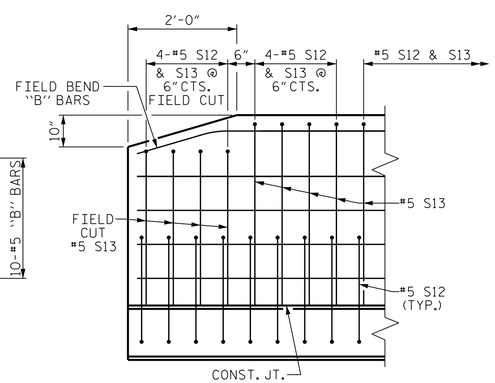

SIDE VIEW

END OF RAIL DETAILS

VERTICAL CONCRETE BARRIER RAIL DETAILS

PROJECT NO. 17BP.8.R.132
RANDOLPH COUNTY
STATION: 15+62.50 -L-

SHEET 7 OF 7

STATE OF NORTH CAROLINA
DEPARTMENT OF TRANSPORTATION
RALEIGH

STANDARD
3'-0" X 2'-0"
PRESTRESSED CONCRETE CORED SLAB UNIT
SPAN B

NORTH CAROLINA PROFESSIONAL SEAL 24939 ENGINEER BYRON E. ATKINSON
9/4/2019

DOCUMENT NOT CONSIDERED FINAL UNLESS ALL SIGNATURES COMPLETED

MI ENGINEERING
1011 SCHAUB DRIVE, SUITE 100
RALEIGH, NC 27606
(919) 851-6606
FIRM PE NUMBER : P-0671

REVISIONS						SHEET NO.
NO.	BY:	DATE:	NO.	BY:	DATE:	S-13
1			3			TOTAL SHEETS
2			4			24

STD. NO. 24PCS3_33_75&105S

ASSEMBLED BY:	B.E. LANNING	DATE:	04/19
CHECKED BY :	B.E. ATKINSON	DATE:	04/19
DESIGN ENGINEER OF RECORD:	B.E. ATKINSON	DATE:	04/19
DRAWN BY : MAA 6/10	REV. 5/18	MAA/THC	
CHECKED BY : MKT 7/10			

9/4/2019
1:27:39 PM
User: blanning
Filename: N:\NC Bridges\MI8005.02.CH Eng.Randolph 352 Br.Rep\17BP8R132\Structures\401_025_17BP8R132_SMU_CSU7_750352.dgn

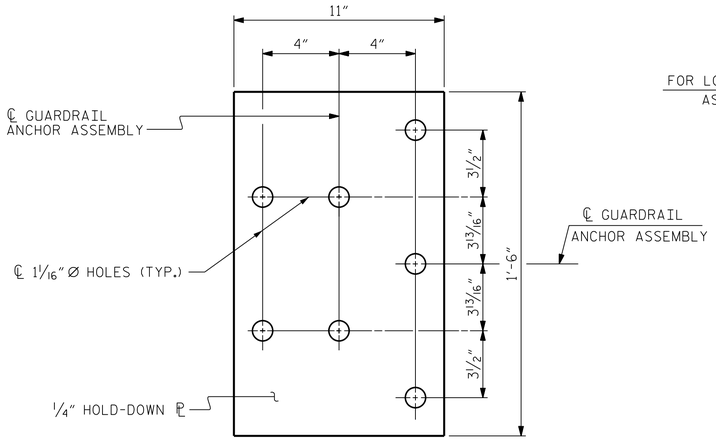

PLAN

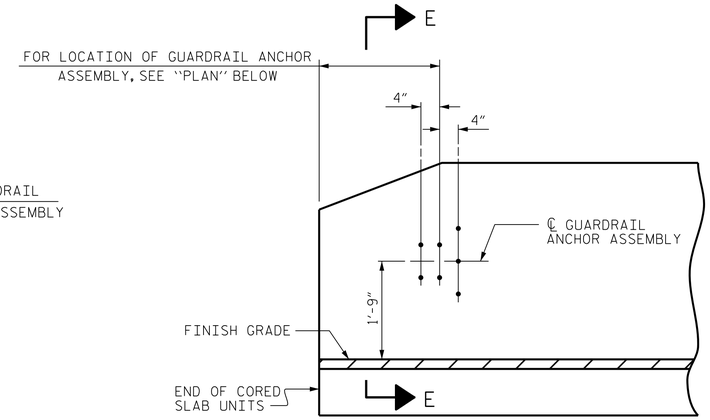

ELEVATION

NOTES

THE GUARDRAIL ANCHOR ASSEMBLY SHALL CONSIST OF A 1/4" HOLD DOWN PLATE AND 7 - 7/8" Ø BOLTS WITH NUTS AND WASHERS.

THE HOLD-DOWN PLATE SHALL CONFORM TO AASHTO M270 GRADE 36. AFTER FABRICATION, THE HOLD-DOWN PLATE SHALL BE HOT-DIP GALVANIZED IN ACCORDANCE WITH AASHTO M111.

BOLTS SHALL CONFORM TO THE REQUIREMENTS OF ASTM A307 AND NUTS SHALL CONFORM TO THE REQUIREMENTS OF AASHTO M291. BOLTS, NUTS AND WASHERS SHALL BE GALVANIZED. (AT THE CONTRACTOR'S OPTION, STAINLESS STEEL BOLTS, NUTS AND WASHERS MAY BE USED AS AN ALTERNATE FOR THE 7/8" Ø GALVANIZED BOLTS, NUTS AND WASHERS. THEY SHALL CONFORM TO OR EXCEED THE MECHANICAL REQUIREMENTS OF ASTM A307. THE USE OF THIS ALTERNATE SHALL BE APPROVED BY THE ENGINEER.)

THE GUARDRAIL ANCHOR ASSEMBLY IS REQUIRED AT ALL POINTS WHERE APPROACH GUARDRAIL IS TO BE ATTACHED TO THE END OF BARRIER RAIL. FOR POINTS OF ATTACHMENT, SEE SKETCH.

AFTER INSTALLATION, THE EXPOSED THREAD OF THE BOLT SHALL BE BURRED WITH A SHARP POINTED TOOL.

THE COST OF THE GUARDRAIL ANCHOR ASSEMBLY SHALL BE INCLUDED IN THE UNIT CONTRACT PRICE BID FOR VERTICAL CONCRETE BARRIER RAIL.

THE VERTICAL REINFORCING BARS MAY BE SHIFTED SLIGHTLY IN THE VERTICAL CONCRETE BARRIER RAIL TO CLEAR ASSEMBLY BOLTS.

THE 1 1/4" Ø HOLES SHALL BE FORMED OR DRILLED WITH A CORE BIT. IMPACT TOOLS WILL NOT BE PERMITTED. ANY CONCRETE DAMAGED BY THIS WORK SHALL BE REPAIRED TO THE SATISFACTION OF THE ENGINEER.

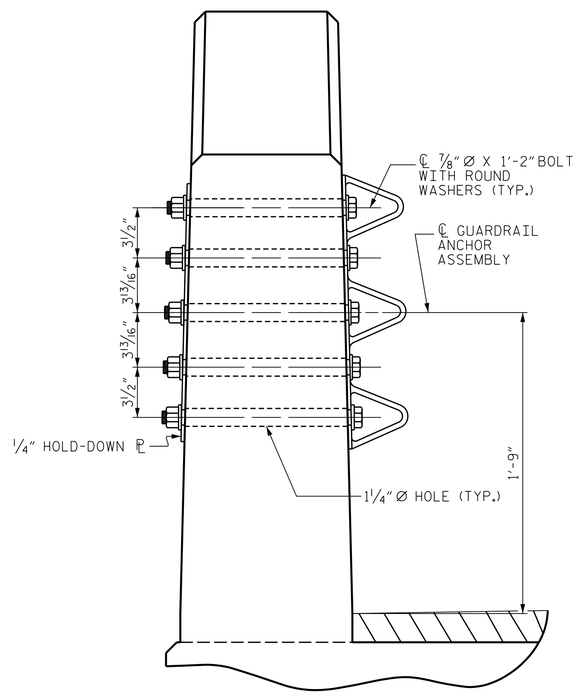

SECTION E-E

GUARDRAIL ANCHOR ASSEMBLY DETAILS

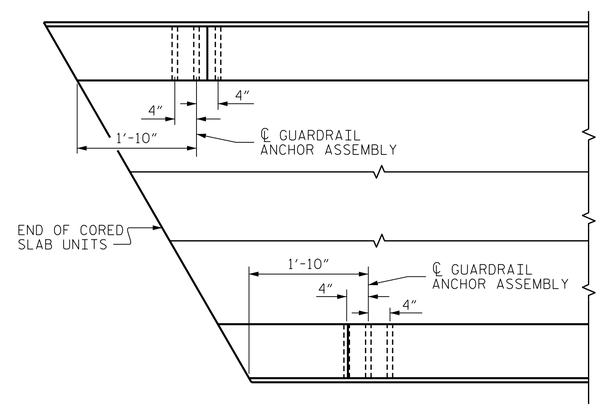

PLAN

LOCATION OF ANCHORS FOR GUARDRAIL

END BENT 1 SHOWN, END BENT 2 SIMILAR.

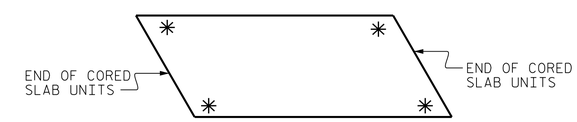

SKETCH SHOWING POINTS OF ATTACHMENT

✳ DENOTES GUARDRAIL ANCHOR ASSEMBLY

PROJECT NO. 17BP.8.R.132

RANDOLPH COUNTY

STATION: 15+62.50 -L-

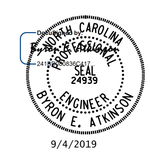

9/4/2019

STATE OF NORTH CAROLINA
DEPARTMENT OF TRANSPORTATION
RALEIGH

STANDARD
GUARDRAIL ANCHORAGE DETAILS FOR VERTICAL CONCRETE BARRIER RAIL

DOCUMENT NOT CONSIDERED FINAL UNLESS ALL SIGNATURES COMPLETED

MI ENGINEERING
1011 SCHAUB DRIVE, SUITE 100
RALEIGH, NC 27606
(919) 851-6606
FIRM PE NUMBER : P-0671

REVISIONS						
NO.	BY:	DATE:	NO.	BY:	DATE:	
1			3			
2			4			

SHEET NO. S-14
TOTAL SHEETS 24

ASSEMBLED BY:	B.E. LANNING	DATE:	04/19
CHECKED BY :	B.E. ATKINSON	DATE:	04/19
DESIGN ENGINEER OF RECORD:	B.E. ATKINSON	DATE:	04/19
DRAWN BY : MAA 5/10	REV. 1/15	MAA/TMG	
CHECKED BY : GM 5/10	REV. 12/17	MAA/THC	
	REV. 5/18	MAA/THC	

(SHT 1a) STD. NO. GRA3

9/4/2019
1:27:41 PM
User: blanning
Filename: N:\NC Bridges\MI8005.02_CH Eng.Randolph 352 Br. Rep\17BP8R132\Structures\401.027.17BP8R132.SMU.GRA1.750352.dgn

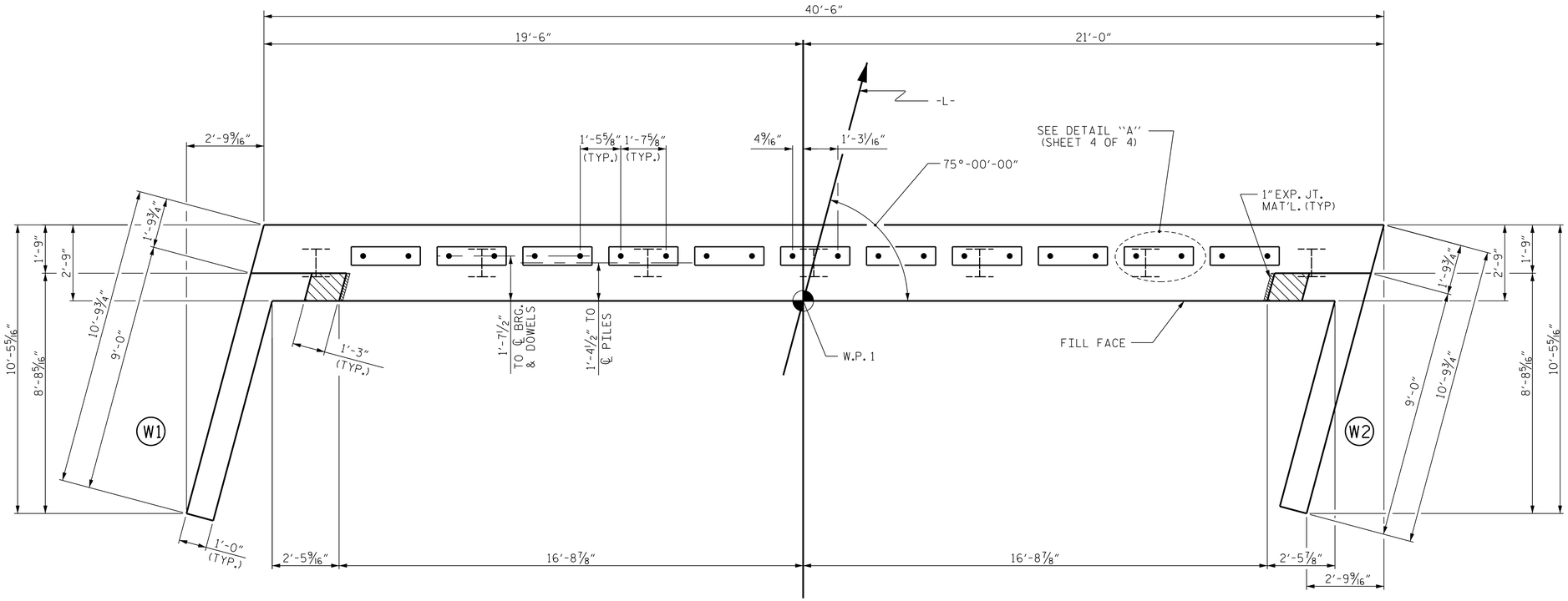

PLAN

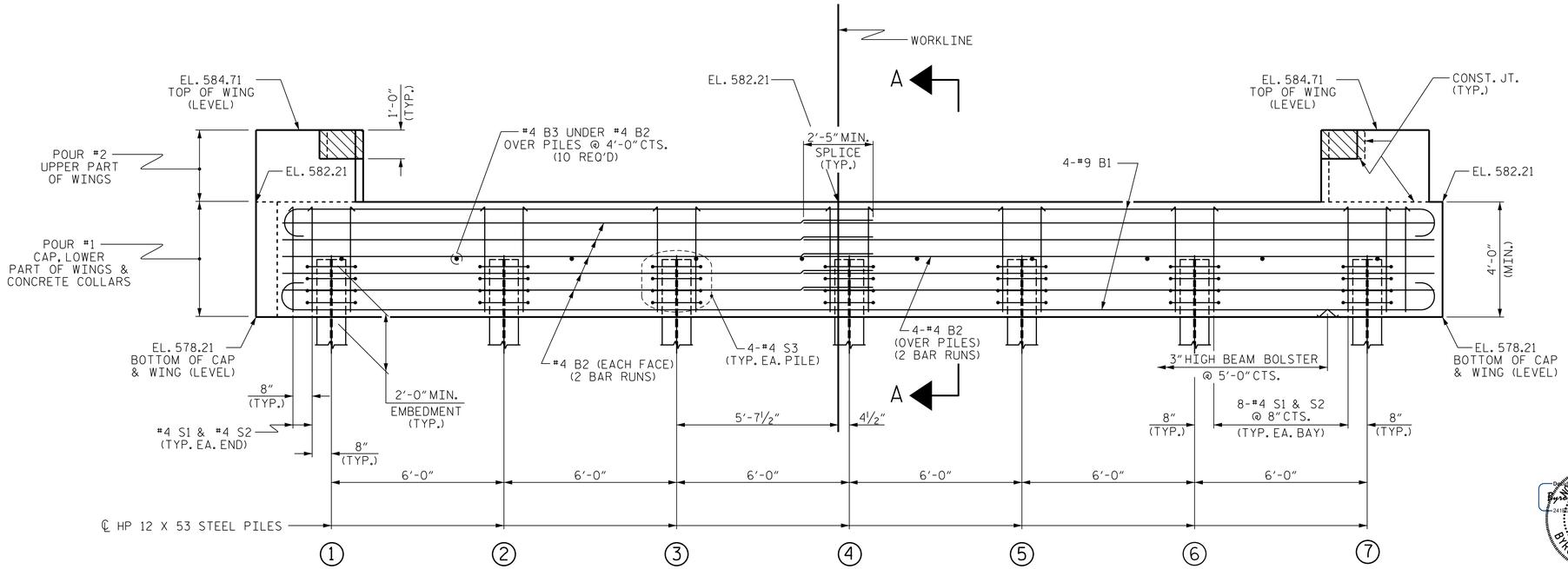

ELEVATION

WINGS NOT SHOWN FOR CLARITY.
FOR SECTION A-A, SEE SHEET 4 OF 4.
CONCRETE COLLARS FOR STEEL PILES NOT SHOWN IN PLAN AND ELEVATION VIEWS FOR CLARITY.
SEE "CORROSION PROTECTION FOR STEEL PILES DETAIL", SHEET 4 OF 4.

NOTES

STIRRUPS IN CAP MAY BE SHIFTED AS NECESSARY TO CLEAR DOWELS.

THE CONCRETE IN THE SHADED AREA OF THE WING SHALL BE POURED AFTER THE VERTICAL CONCRETE BARRIER RAIL IS CAST IF SLIP FORMING IS USED.

FOR PILE SPLICE DETAILS, SEE SHEET 4 OF 4.

FOR WING DETAILS, SEE SHEET 3 OF 4.

PROJECT NO. 17BP.8.R.132
RANDOLPH COUNTY
STATION: 15+62.50 -L-

SHEET 1 OF 4

STATE OF NORTH CAROLINA
DEPARTMENT OF TRANSPORTATION
RALEIGH

SUBSTRUCTURE

END BENT No. 1

NORTH CAROLINA PROFESSIONAL SEAL 24939 ENGINEER BYRON E. ATKINSON
9/4/2019

ASSEMBLED BY:	B.E. LANNING	DATE:	04/19
CHECKED BY :	B.E. ATKINSON	DATE:	04/19
DESIGN ENGINEER OF RECORD:	B.E. ATKINSON	DATE:	04/19
DRAWN BY : WJH 12/11	REV. 4/15	MAA/TMG	
CHECKED BY : AAC 12/11			

DOCUMENT NOT CONSIDERED FINAL UNLESS ALL SIGNATURES COMPLETED

MI ENGINEERING
1011 SCHAUB DRIVE, SUITE 100
RALEIGH, NC 27606
(919) 851-6606
FIRM PE NUMBER : P-0671

REVISIONS						SHEET NO.
NO.	BY:	DATE:	NO.	BY:	DATE:	S-15
1			3			TOTAL SHEETS
2			4			24

STD. NO. EB_33_75S4

9/4/2019
1:27:43 PM
User: blanning
Filename: N:\NC Bridges\M18005.02_CH Eng_Randolph 352 Br. Rep\17BP8R132\Structures\401_029_17BP8R132_SMU_EB1_750352.dgn

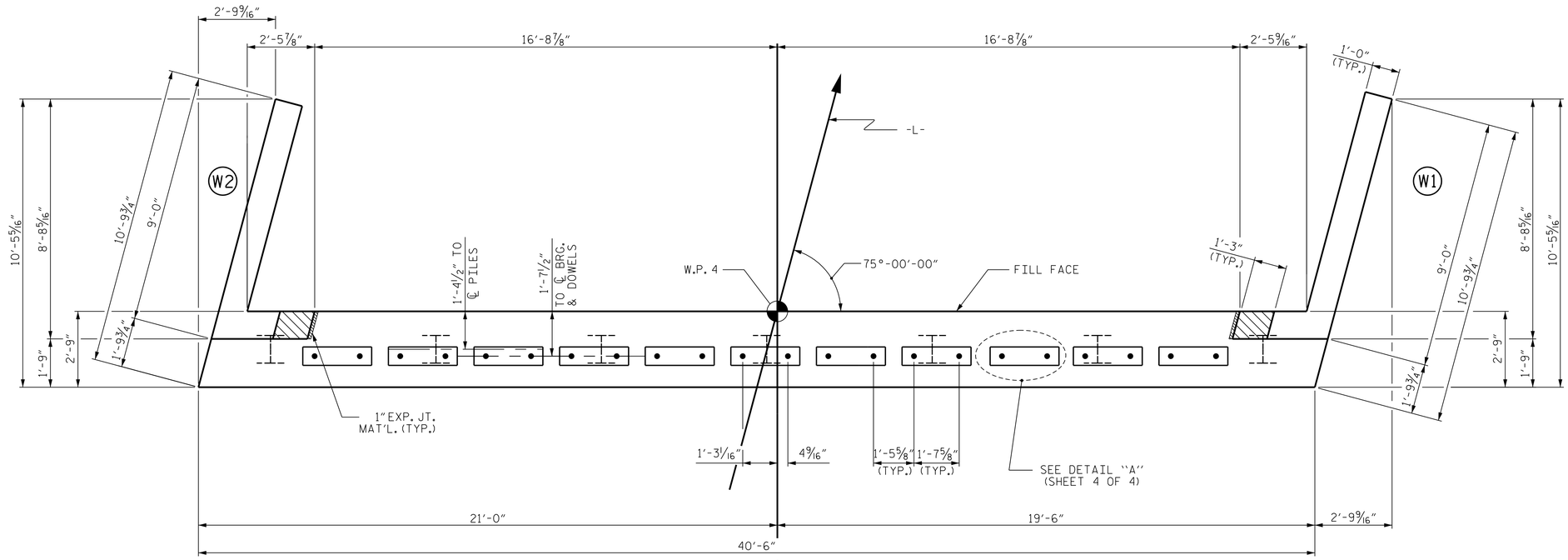

PLAN

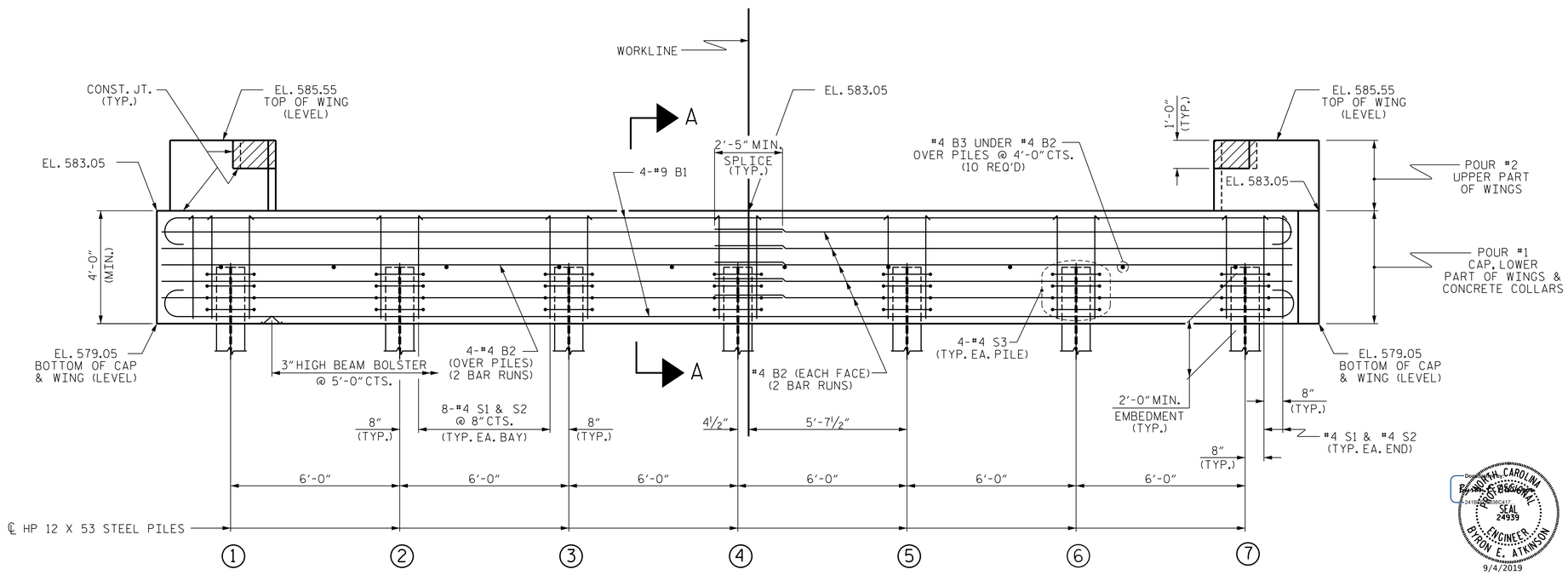

ELEVATION

WINGS NOT SHOWN FOR CLARITY.
FOR SECTION A-A, SEE SHEET 4 OF 4.
CONCRETE COLLARS FOR STEEL PILES NOT SHOWN IN PLAN AND ELEVATION VIEWS FOR CLARITY.
SEE "CORROSION PROTECTION FOR STEEL PILES DETAIL", SHEET 4 OF 4.

NOTES

STIRRUPS IN CAP MAY BE SHIFTED AS NECESSARY TO CLEAR DOWELS.

THE CONCRETE IN THE SHADED AREA OF THE WING SHALL BE POURED AFTER THE VERTICAL CONCRETE BARRIER RAIL IS CAST IF SLIP FORMING IS USED.

FOR PILE SPLICE DETAILS, SEE SHEET 4 OF 4.

FOR WING DETAILS, SEE SHEET 3 OF 4.

PROJECT NO. 17BP.8.R.132
RANDOLPH COUNTY
STATION: 15+62.50 -L-

SHEET 2 OF 4

STATE OF NORTH CAROLINA
DEPARTMENT OF TRANSPORTATION
RALEIGH

SUBSTRUCTURE

END BENT No. 2

NORTH CAROLINA PROFESSIONAL SEAL 24939 ENGINEER BYRON E. ATKINSON
9/4/2019

DOCUMENT NOT CONSIDERED FINAL UNLESS ALL SIGNATURES COMPLETED

MI ENGINEERING
1011 SCHAUB DRIVE, SUITE 100
RALEIGH, NC 27606
(919) 851-6606
FIRM PE NUMBER : P-0671

ASSEMBLED BY:	B.E. LANNING	DATE:	04/19
CHECKED BY :	B.E. ATKINSON	DATE:	04/19
DESIGN ENGINEER OF RECORD:	B.E. ATKINSON	DATE:	04/19
DRAWN BY : WJH 12/11	REV. 4/15	MAA/TMG	
CHECKED BY : AAC 12/11			

REVISIONS						SHEET NO.
NO.	BY:	DATE:	NO.	BY:	DATE:	S-16
1			3			TOTAL SHEETS
2			4			24

STD. NO. EB_33_75S4

9/4/2019
12:7:45 PM
User: blanning
Filename: N:\NC Bridges\MI8005.02_CH Eng.Randolph 352 Br. Repl\17BP8R132\Structures\401.031.17BP8R132.SMU.EB2.750352.dgn

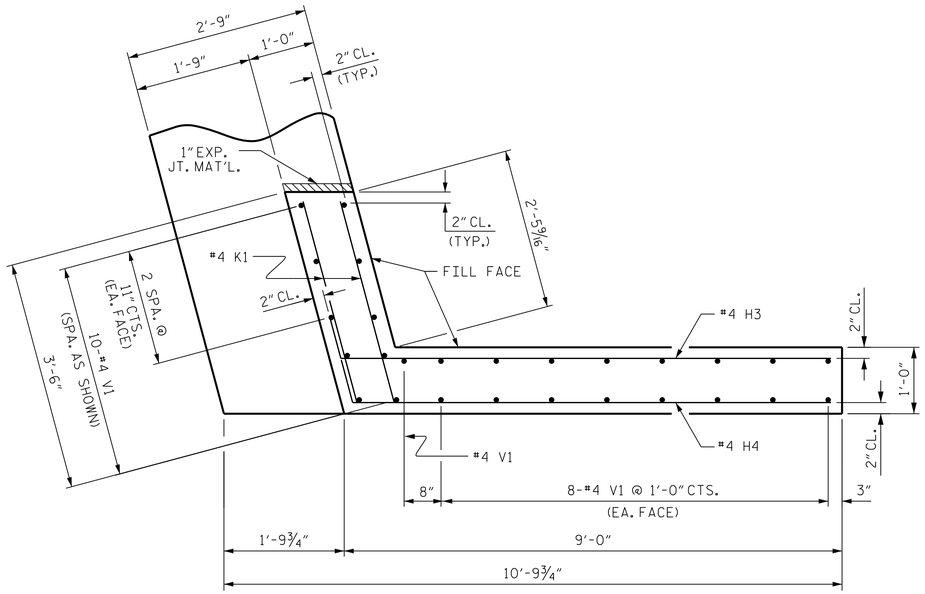

PLAN OF WING (W1)

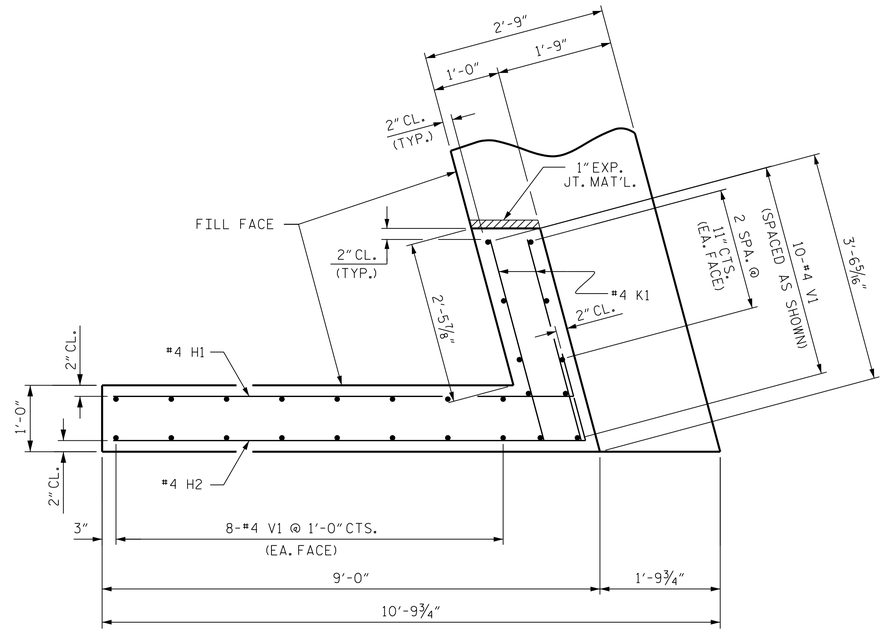

PLAN OF WING (W2)

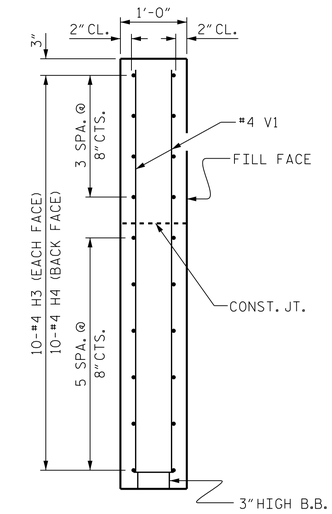

SECTION X-X

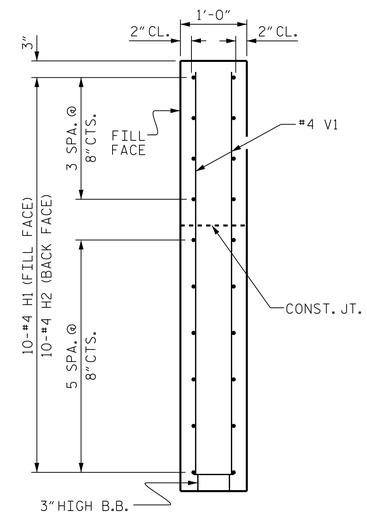

SECTION Y-Y

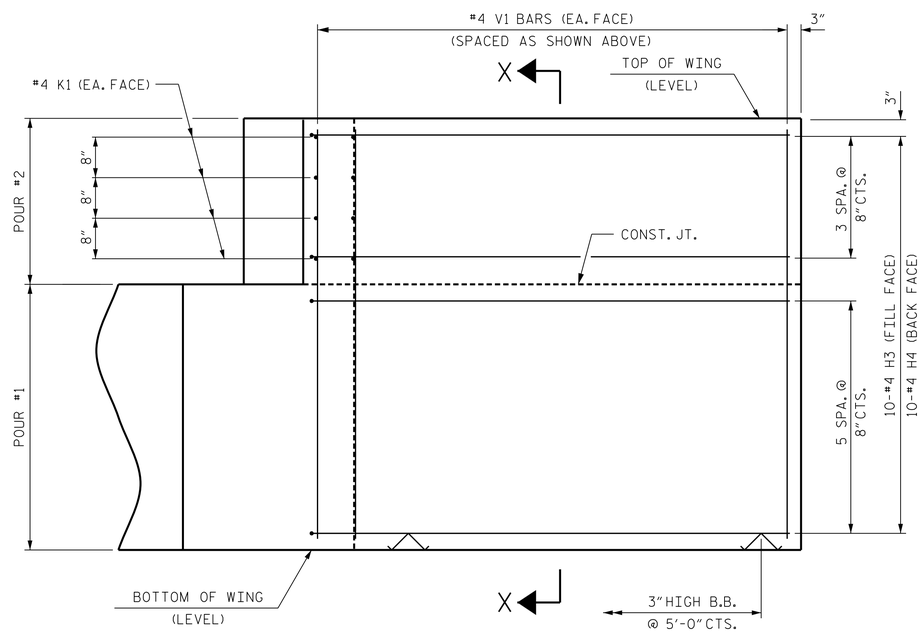

ELEVATION OF WING (W1)

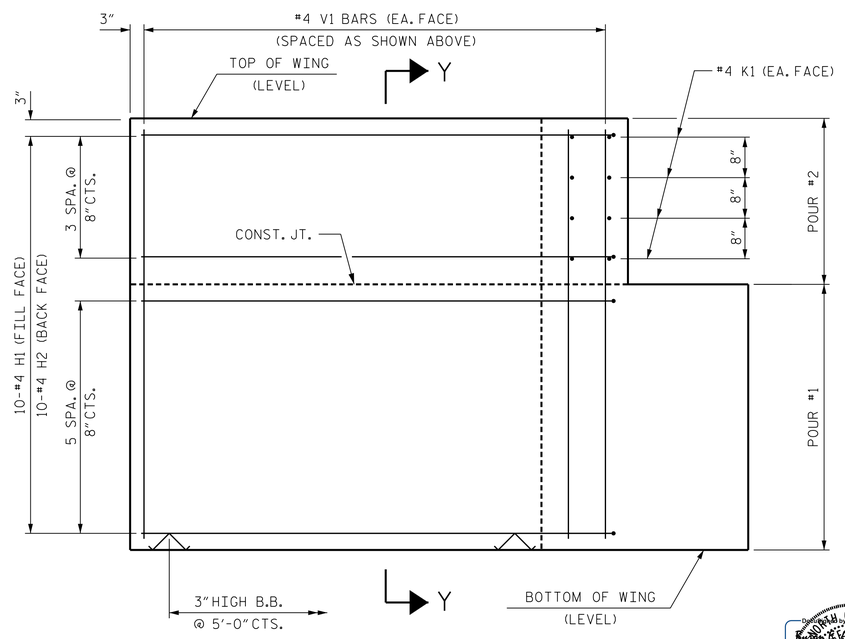

ELEVATION OF WING (W2)

WING DETAILS

PROJECT NO. 17BP.8.R.132

RANDOLPH COUNTY

STATION: 15+62.50 -L-

SHEET 3 OF 4

STATE OF NORTH CAROLINA
DEPARTMENT OF TRANSPORTATION
RALEIGH

SUBSTRUCTURE
END BENT
WING DETAILS

NORTH CAROLINA PROFESSIONAL SEAL 24939 ENGINEER BYRON E. ATKINSON
9/4/2019

DOCUMENT NOT CONSIDERED FINAL UNLESS ALL SIGNATURES COMPLETED

MI ENGINEERING
1011 SCHAUB DRIVE, SUITE 100
RALEIGH, NC 27606
(919) 851-6606
FIRM PE NUMBER : P-0671

REVISIONS							SHEET NO.
NO.	BY:	DATE:	NO.	BY:	DATE:		S-17
1			3				TOTAL SHEETS
2			4				24

ASSEMBLED BY: B.E. LANNING	DATE: 04/19	
CHECKED BY : B.E. ATKINSON	DATE: 04/19	
DESIGN ENGINEER OF RECORD: B.E. ATKINSON	DATE: 04/19	
DRAWN BY : WJH 12/11	REV. 4/15	MAA/TMG
CHECKED BY : AAC 12/11		

STD. NO. EB_33_75S4

9/4/2019
1:27:47 PM
User: blanning
Filename: N:\NC Bridges\MI8005.02_CH Eng.Randolph 352 Br. Repl\17BP8R132\Structures\V01.033.17BP8R132_SMU_EB3_750352.dgn

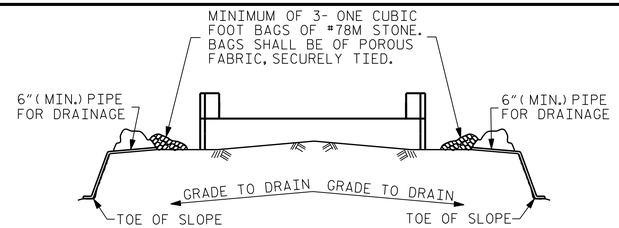

BAGGED STONE AND PIPE SHALL BE PLACED IMMEDIATELY AFTER COMPLETION OF END BENT EXCAVATION. PIPE MAY BE EITHER CONCRETE, CORRUGATED STEEL, CORRUGATED ALUMINUM ALLOY, OR CORRUGATED PLASTIC. PERFORATED PIPE WILL NOT BE ALLOWED.

BAGGED STONE SHALL REMAIN IN PLACE UNTIL THE ENGINEER DIRECTS THAT IT BE REMOVED. THE CONTRACTOR SHALL REMOVE AND DISPOSE OF SILT ACCUMULATIONS AT BAGGED STONE WHEN SO DIRECTED BY THE ENGINEER. BAGS SHALL BE REMOVED AND REPLACED WHENEVER THE ENGINEER DETERMINES THAT THEY HAVE DETERIORATED AND LOST THEIR EFFECTIVENESS.

NO SEPARATE PAYMENT WILL BE MADE FOR THIS WORK AND THE ENTIRE COST OF THIS WORK SHALL BE INCLUDED IN THE UNIT CONTRACT PRICE BID FOR THE SEVERAL PAY ITEMS.

TEMPORARY DRAINAGE AT END BENT

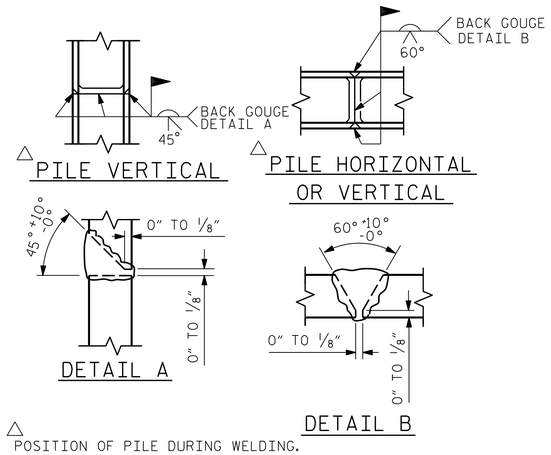

△ POSITION OF PILE DURING WELDING.

PILE SPLICE DETAILS

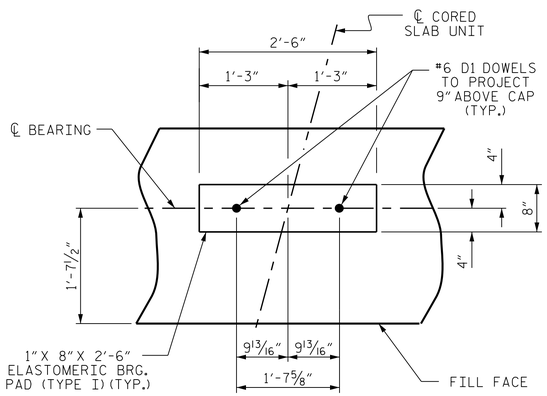

DETAIL "A"

(END BENT No. 1 SHOWN, END BENT No. 2 SIMILAR BY ROTATION)

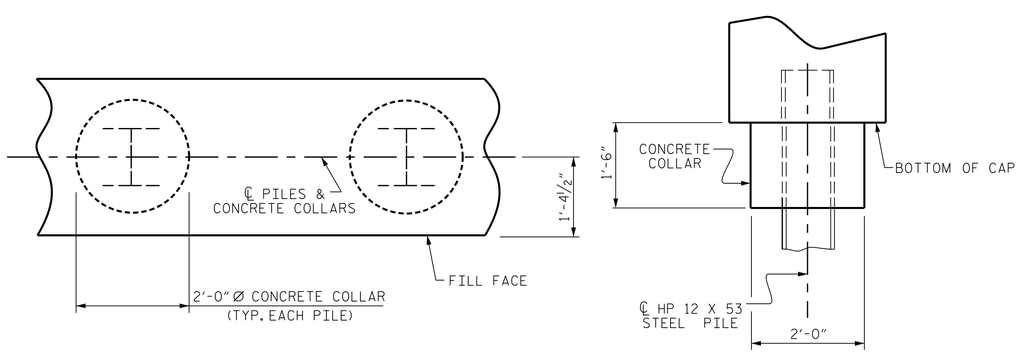

PLAN

ELEVATION

CORROSION PROTECTION FOR STEEL PILES DETAIL

(END BENT No. 1 SHOWN, END BENT No. 2 SIMILAR BY ROTATION)

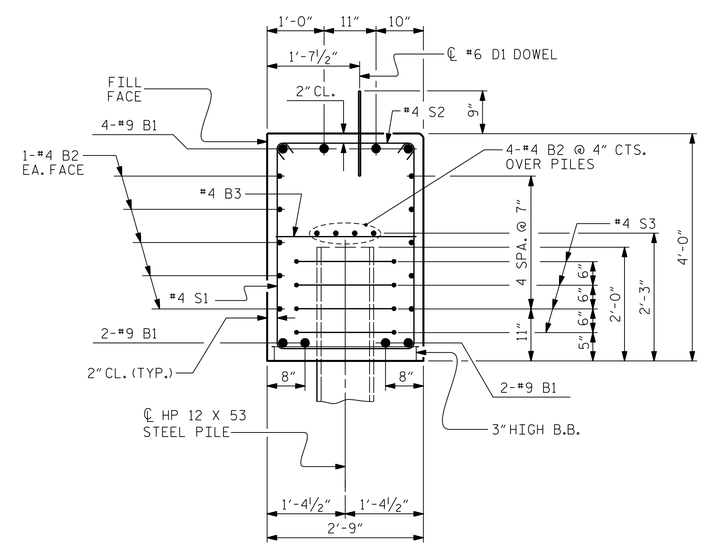

SECTION A-A

(CONCRETE COLLAR NOT SHOWN FOR CLARITY. SEE "CORROSION PROTECTION FOR STEEL PILES DETAIL.")

BAR TYPES

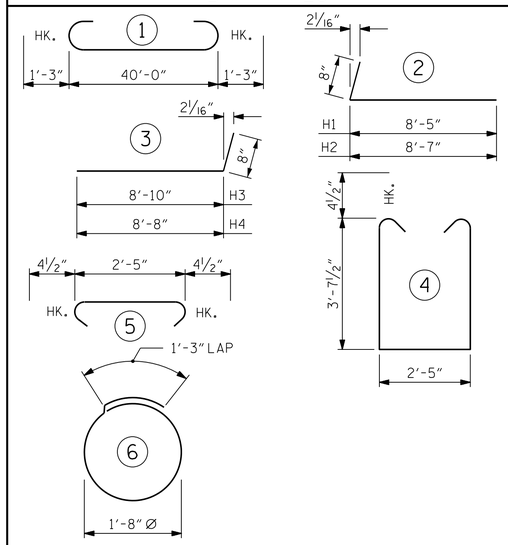

ALL BAR DIMENSIONS ARE OUT TO OUT.

END BENT No. 1	END BENT No. 2
HP 12 X 53 STEEL PILES NO: 7 LIN. FT.= 230	HP 12 X 53 STEEL PILES NO: 7 LIN. FT.= 265
PILE DRIVING EQUIPMENT SETUP FOR HP 12 X 53 STEEL PILES NO: 7	PILE DRIVING EQUIPMENT SETUP FOR HP 12 X 53 STEEL PILES NO: 7

BILL OF MATERIAL
FOR ONE END BENT

BAR	NO.	SIZE	TYPE	LENGTH	WEIGHT
B1	8	#9	1	42'-6"	1156
B2	28	#4	STR	21'-4"	399
B3	10	#4	STR	2'-5"	16
D1	22	#6	STR	1'-6"	50
H1	10	#4	2	9'-1"	61
H2	10	#4	2	9'-3"	62
H3	10	#4	3	9'-6"	63
H4	10	#4	3	9'-4"	62
K1	16	#4	STR	3'-1"	33
S1	52	#4	4	10'-5"	362
S2	52	#4	5	3'-2"	110
S3	28	#4	6	6'-6"	122
V1	53	#4	STR	6'-2"	218

REINFORCING STEEL (FOR ONE END BENT) 2714 LBS.

CLASS A CONCRETE BREAKDOWN (FOR ONE END BENT)

POUR #1 CAP, LOWER PART OF WINGS & COLLARS 20.1 C.Y.

POUR #2 UPPER PART OF WINGS 2.1 C.Y.

TOTAL CLASS A CONCRETE 22.2 C.Y.

PROJECT NO. 17BP.8.R.132
RANDOLPH COUNTY
STATION: 15+62.50 -L-

SHEET 4 OF 4

STATE OF NORTH CAROLINA
DEPARTMENT OF TRANSPORTATION
RALEIGH

SUBSTRUCTURE

END BENT No. 1 & 2 DETAILS

NORTH CAROLINA PROFESSIONAL SEAL 24939 ENGINEER BYRON E. ATKINSON
9/4/2019

DOCUMENT NOT CONSIDERED FINAL UNLESS ALL SIGNATURES COMPLETED

MI ENGINEERING
1011 SCHAUB DRIVE, SUITE 100
RALEIGH, NC 27606
(919) 851-6606
FIRM PE NUMBER : P-0671

REVISIONS								SHEET NO.
NO.	BY:	DATE:	NO.	BY:	DATE:			S-18
1			3					TOTAL SHEETS
2			4					24

STD. NO. EB_33_75S4

ASSEMBLED BY:	B.E. LANNING	DATE:	04/19
CHECKED BY :	B.E. ATKINSON	DATE:	04/19
DESIGN ENGINEER OF RECORD:	B.E. ATKINSON	DATE:	04/19
DRAWN BY : WJH 12/11	REV. 4/17	MAA/THC	
CHECKED BY : AAC 12/11			

9/4/2019
1:27:50 PM
User: blanning
Filename: N:\NC Bridges\MI8005.02_CH Eng.Randolph 352 Br. Rep\17BP8R132\Structures\401.035_17BP8R132_SMU_EB4_750352.dgn

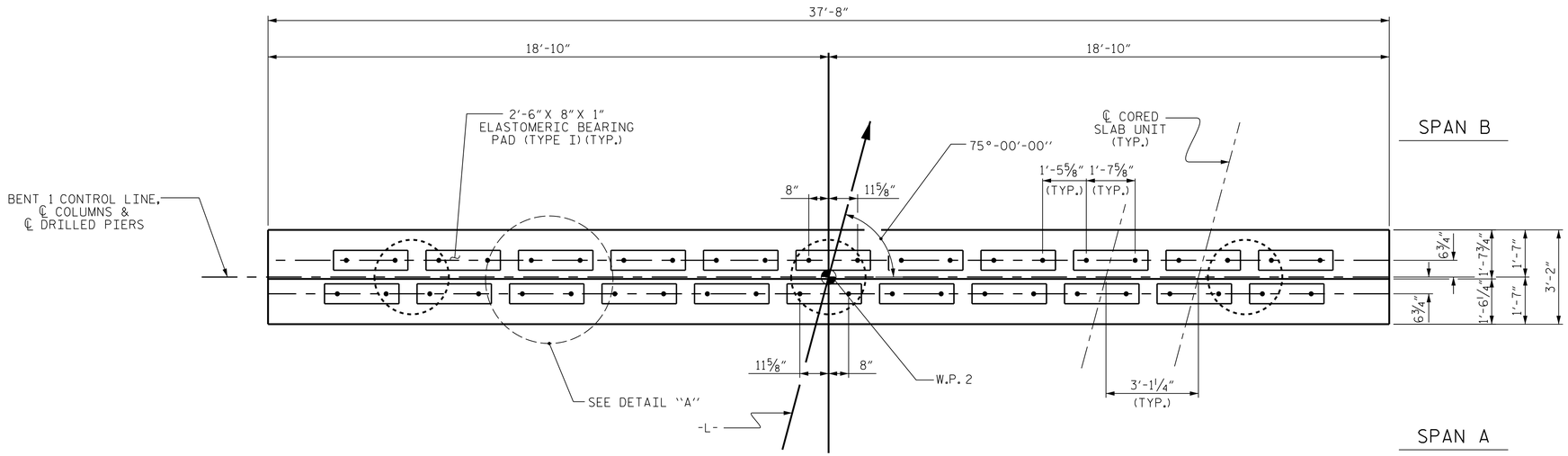

PLAN

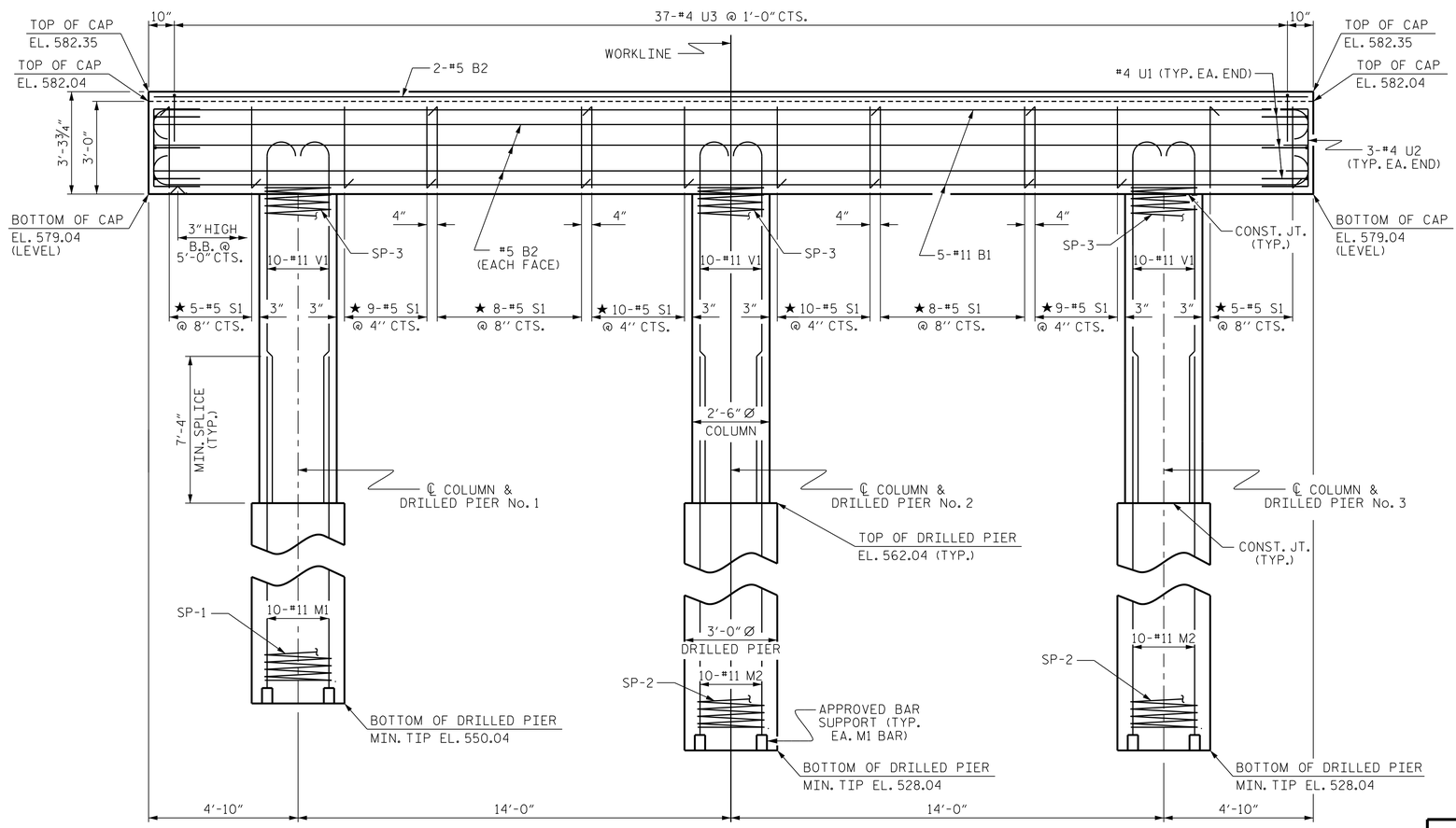

ELEVATION

DIMENSIONS & REINFORCING STEEL ARE TYPICAL FOR EACH COLUMN & DRILLED PIER UNLESS OTHERWISE NOTED.

NOTES

STIRRUPS IN CAP MAY BE SHIFTED AS NECESSARY TO CLEAR DOWELS.

HOOKS ON "V" BARS MAY BE TURNED AS NECESSARY FOR PLACING REINFORCING STEEL.

FOR DRILLED PIERS, SEE SECTION 411 OF THE STANDARD SPECIFICATIONS.

ALL STEEL IN THE DRILLED PIERS IS INCLUDED IN THE PAY ITEMS FOR "REINFORCING STEEL" AND "SPIRAL COLUMN REINFORCING STEEL."

★ INVERT ALTERNATE STIRRUPS.

THE LOCATION OF THE CONSTRUCTION JOINT IN THE DRILLED PIERS IS BASED ON AN APPROXIMATE GROUND LINE ELEVATION. IF THE CONSTRUCTION JOINT IS ABOVE THE ACTUAL GROUND LINE ELEVATION, THE CONTRACTOR SHALL PLACE THE CONSTRUCTION JOINT ONE FOOT BELOW THE GROUND LINE.

THE CONTRACTOR'S ATTENTION IS CALLED TO THE FACT THAT THE LONGITUDINAL REINFORCEMENT FOR DRILLED PIERS IS DETAILED WITH 3 FEET OF EXTRA LENGTH.

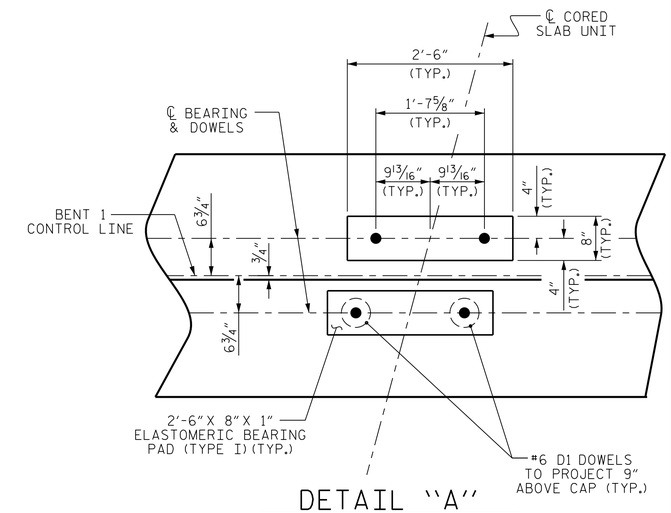

DETAIL "A"

(DIMENSIONS ARE TYPICAL EACH BEARING)

PROJECT NO. 17BP.8.R.132

RANDOLPH COUNTY

STATION: 15+62.50 -L-

SHEET 1 OF 2

STATE OF NORTH CAROLINA
DEPARTMENT OF TRANSPORTATION
RALEIGH

SUBSTRUCTURE
BENT No. 1

NORTH CAROLINA PROFESSIONAL SEAL 24939 ENGINEER BYRON E. ATKINSON

9/4/2019

DOCUMENT NOT CONSIDERED FINAL UNLESS ALL SIGNATURES COMPLETED

MI ENGINEERING
1011 SCHAUB DRIVE, SUITE 100
RALEIGH, NC 27606
(919) 851-6606
FIRM PE NUMBER : P-0671

ASSEMBLED BY:	B.E. LANNING	DATE:	04/19
CHECKED BY :	B.E. ATKINSON	DATE:	04/19
DESIGN ENGINEER OF RECORD:	B.E. ATKINSON	DATE:	04/19
DRAWN BY : DGE 4/10			
CHECKED BY : MKT 4/10		REV. 11/14	MAA/TMG

REVISIONS						
NO.	BY:	DATE:	NO.	BY:	DATE:	
1			3			
2			4			

SHEET NO. S-19

TOTAL SHEETS 24

STD. NO. DP_BT_33_75S_<50'

9/4/2019
1:27:52 PM
User: blanning
Filename: N:\NC Bridges\MI8005.02_CH Eng.Randolph 352 Br. Repl\17BP8R132\Structures\401_037_17BP8R132_SMU_B1A_750352.dgn

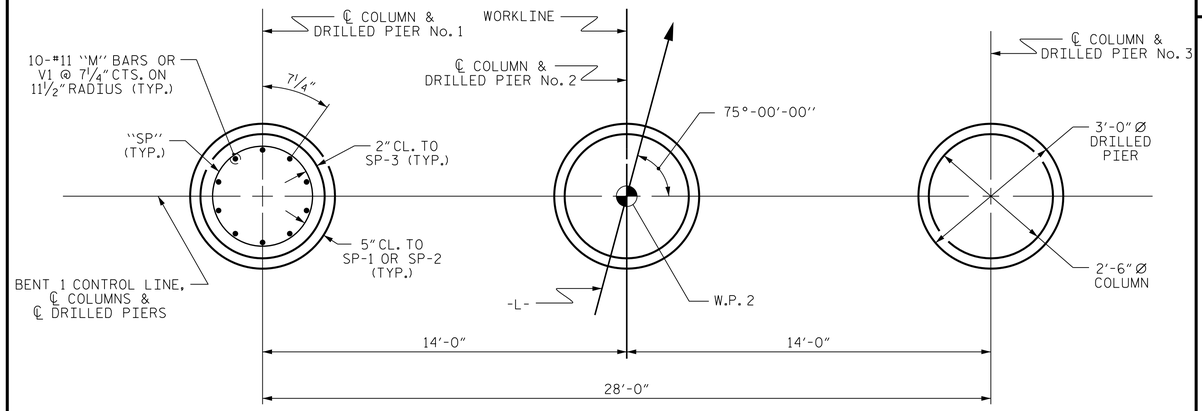

PLAN OF DRILLED PIERS & COLUMNS

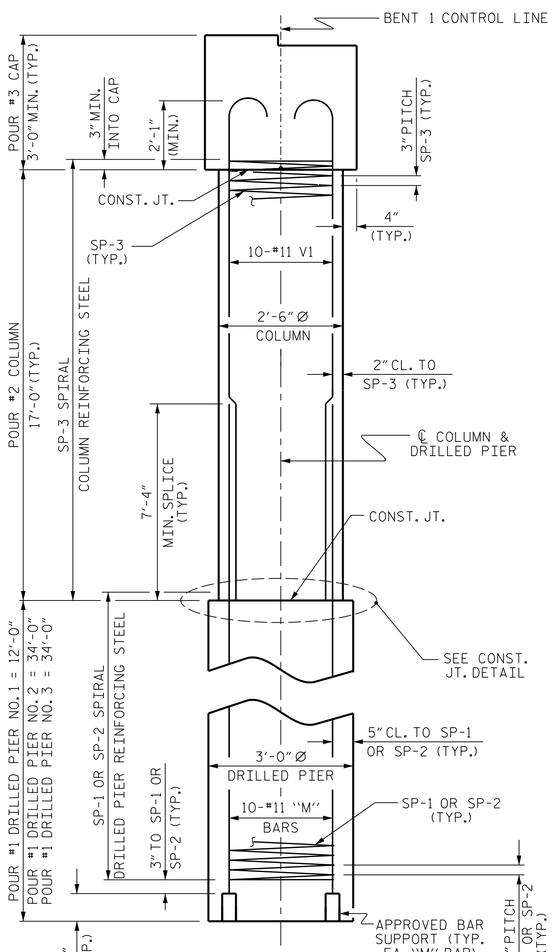

END ELEVATION

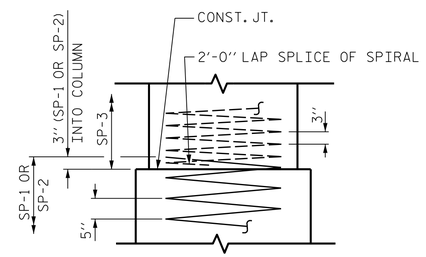

CONSTRUCTION JOINT DETAIL

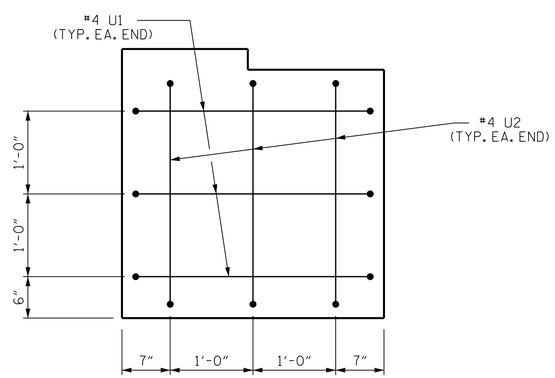

END OF CAP VIEW

(TYPICAL BOTH ENDS)

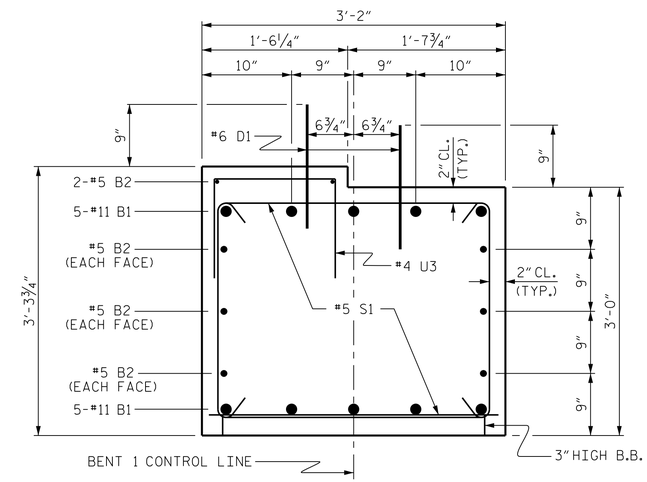

SECTION THRU CAP

BAR TYPES

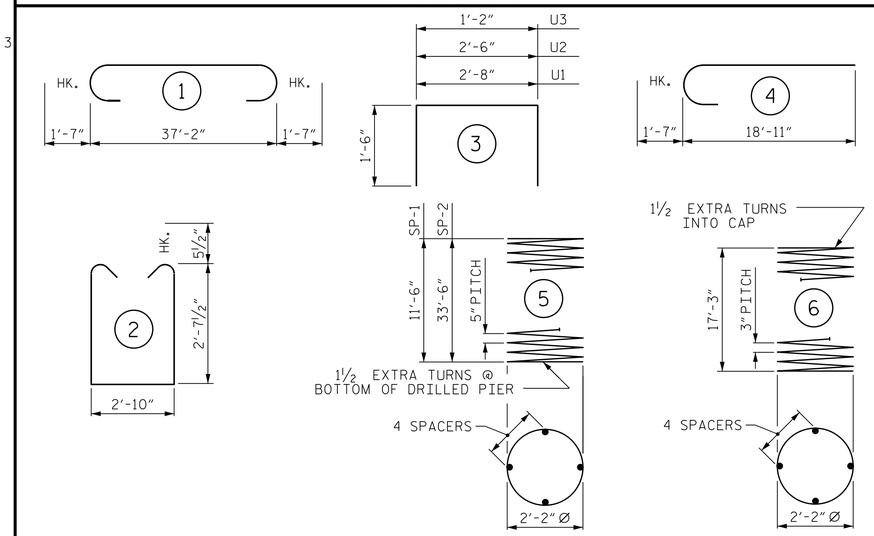

ALL BAR DIMENSIONS ARE OUT TO OUT

BILL OF MATERIAL
FOR ONE BENT

BAR	NO.	SIZE	TYPE	LENGTH	WEIGHT
B1	10	#11	1	40'-4"	2143
B2	8	#5	STR	37'-4"	312
D1	44	#6	STR	1'-6"	99
M1	10	#11	STR	21'-10"	1160
M2	20	#11	STR	43'-10"	4658
S1	64	#5	2	9'-0"	601
U1	6	#4	3	5'-8"	23
U2	6	#4	3	5'-6"	22
U3	37	#4	3	4'-2"	103
V1	30	#11	4	20'-6"	3267
REINFORCING STEEL (FOR ONE BENT)					12388 LBS.
SP-1	1	*	5	193'-2"	201
SP-2	2	*	5	543'-10"	1134
SP-3	3	**	6	469'-10"	942
SPIRAL COLUMN REINFORCING STEEL (FOR ONE BENT)					2277 LBS.

* THE SP-1 OR SP-2 SPIRAL REINFORCING STEEL SHALL BE W31 OR D-31 COLD DRAWN WIRE OR #5 PLAIN OR DEFORMED BAR

** THE SP-3 SPIRAL REINFORCING STEEL SHALL BE W20 OR D-20 COLD DRAWN WIRE OR #4 PLAIN OR DEFORMED BAR

CLASS A CONCRETE BREAKDOWN (FOR ONE BENT)

POUR #2 (COLUMNS)	9.3 C.Y.
POUR #3 (CAP)	14.3 C.Y.
TOTAL CLASS A CONCRETE	23.6 C.Y.

DRILLED PIERS: (FOR ONE BENT)

DRILLED PIER CONCRETE POUR #1 (DRILLED PIERS)	21.0 C.Y.
3'-0" Ø DRILLED PIER NOT IN SOIL	14.0 LIN. FT.
3'-0" Ø DRILLED PIER IN SOIL	66.0 LIN. FT.
PERMANENT STEEL CASING FOR 3'-0" Ø DRILLED PIER	19.5 LIN. FT.
CSL TUBES	338.0 LIN. FT.

PROJECT NO. 17BP.8.R.132

RANDOLPH COUNTY

STATION: 15+62.50 -L-

SHEET 2 OF 2

STATE OF NORTH CAROLINA
DEPARTMENT OF TRANSPORTATION
RALEIGH

SUBSTRUCTURE

BENT No. 1

NORTH CAROLINA PROFESSIONAL SEAL 24939 ENGINEER BYRON E. ATKINSON

9/4/2019

DOCUMENT NOT CONSIDERED FINAL UNLESS ALL SIGNATURES COMPLETED

MI ENGINEERING
1011 SCHAUB DRIVE, SUITE 100
RALEIGH, NC 27606
(919) 851-6606
FIRM PE NUMBER : P-0671

REVISIONS						
NO.	BY:	DATE:	NO.	BY:	DATE:	
1			3			
2			4			

SHEET NO. S-20
TOTAL SHEETS 24

ASSEMBLED BY:	B.E. LANNING	DATE:	04/19
CHECKED BY :	B.E. ATKINSON	DATE:	04/19
DESIGN ENGINEER OF RECORD:	B.E. ATKINSON	DATE:	04/19
DRAWN BY : DGE 3/10			
CHECKED BY : MKT 3/10			
REV. 11/14	MAA/TMG		

9/4/2019
1:27:55 PM
User: blanning
Filename: N:\NC Bridges\M18005.02.CH Eng.Randolph 352 Br. Rep\17BP8R132\Structures\401.039.17BP8R132.SMU.BIB.750352.dgn

STD. NO. DP_BT_33_75S_<50'

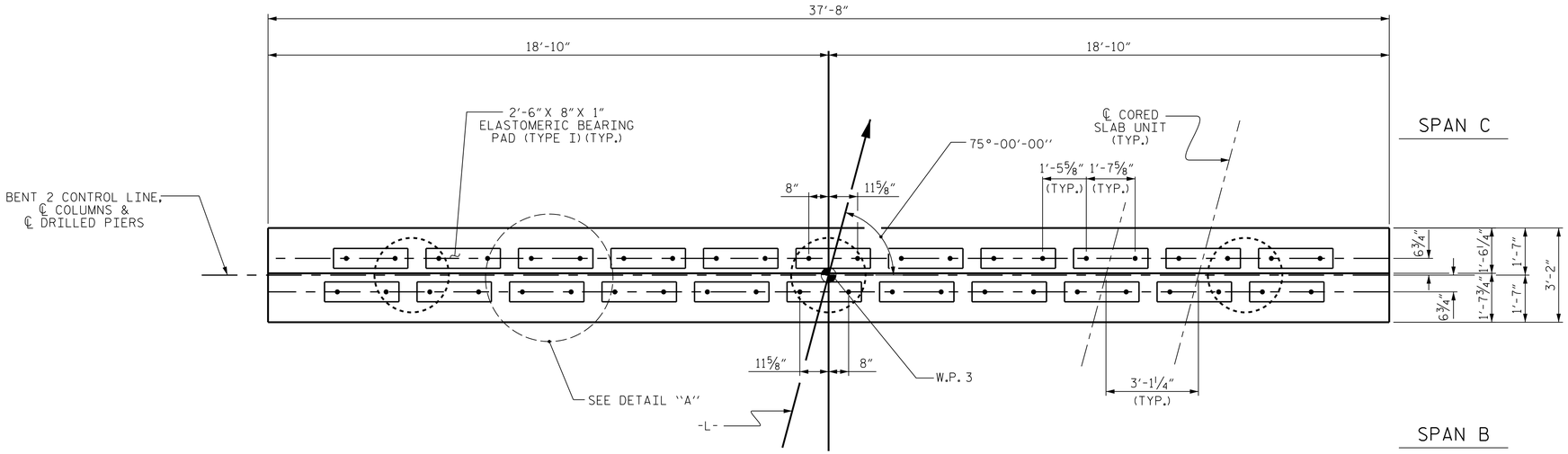

PLAN

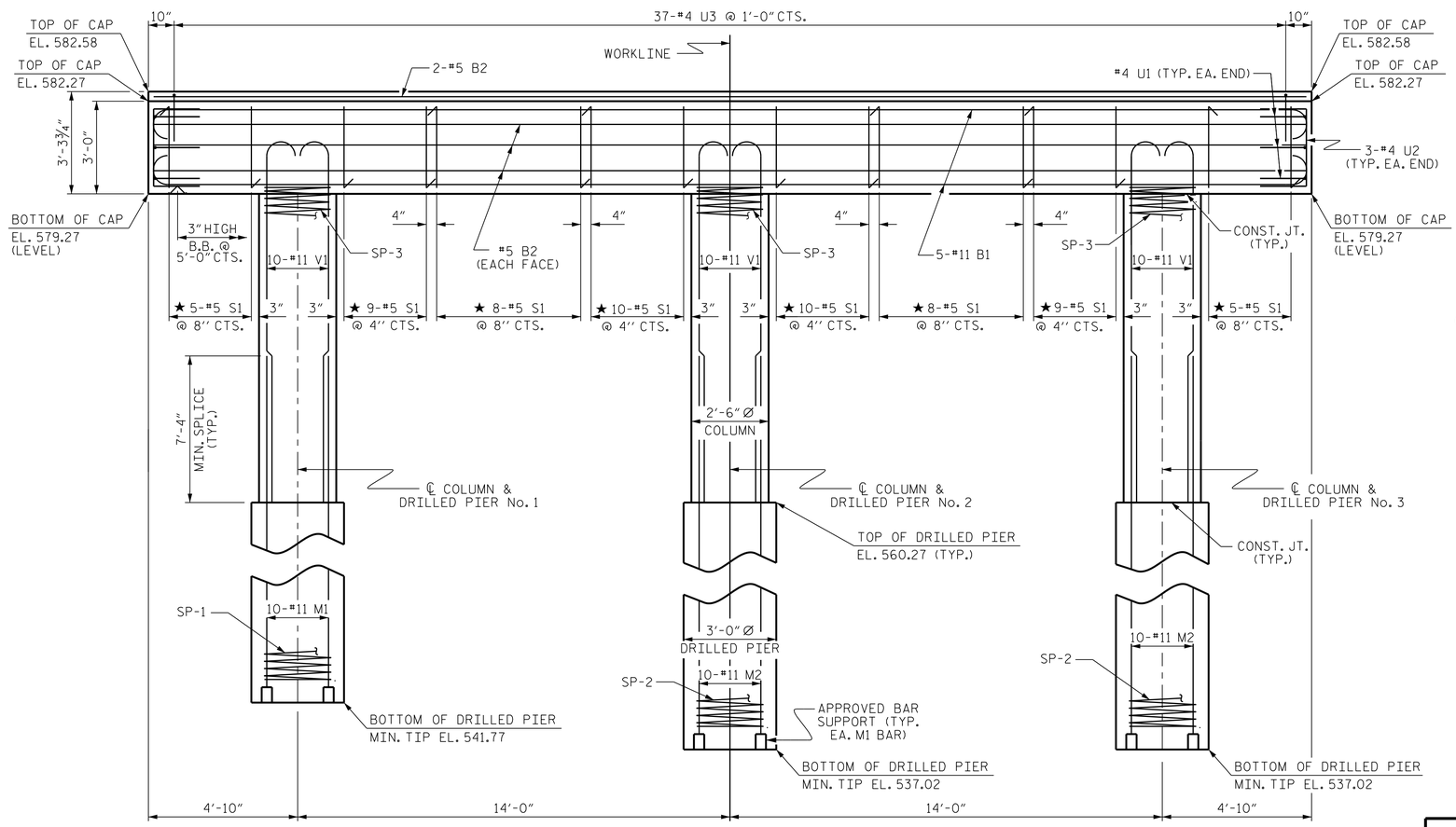

ELEVATION

DIMENSIONS & REINFORCING STEEL ARE TYPICAL FOR EACH COLUMN & DRILLED PIER UNLESS OTHERWISE NOTED.

NOTES

STIRRUPS IN CAP MAY BE SHIFTED AS NECESSARY TO CLEAR DOWELS.

HOOKS ON "V" BARS MAY BE TURNED AS NECESSARY FOR PLACING REINFORCING STEEL.

FOR DRILLED PIERS, SEE SECTION 411 OF THE STANDARD SPECIFICATIONS.

ALL STEEL IN THE DRILLED PIERS IS INCLUDED IN THE PAY ITEMS FOR "REINFORCING STEEL" AND "SPIRAL COLUMN REINFORCING STEEL."

★ INVERT ALTERNATE STIRRUPS.

THE LOCATION OF THE CONSTRUCTION JOINT IN THE DRILLED PIERS IS BASED ON AN APPROXIMATE GROUND LINE ELEVATION. IF THE CONSTRUCTION JOINT IS ABOVE THE ACTUAL GROUND LINE ELEVATION, THE CONTRACTOR SHALL PLACE THE CONSTRUCTION JOINT ONE FOOT BELOW THE GROUND LINE.

THE CONTRACTOR'S ATTENTION IS CALLED TO THE FACT THAT THE LONGITUDINAL REINFORCEMENT FOR DRILLED PIERS IS DETAILED WITH 3 FEET OF EXTRA LENGTH.

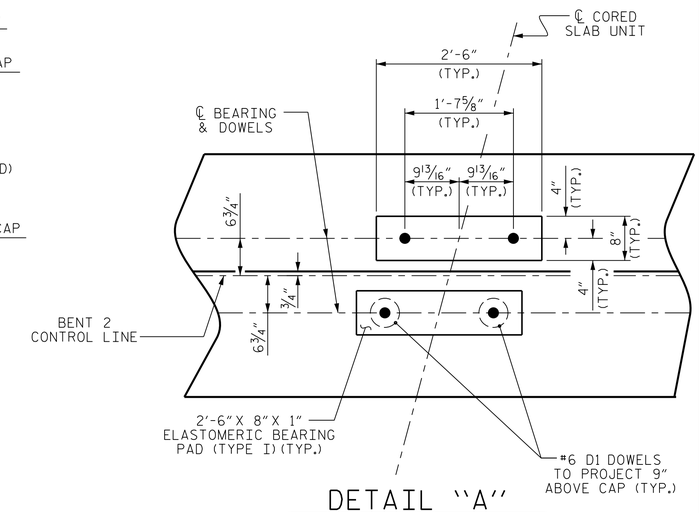

DETAIL "A"

(DIMENSIONS ARE TYPICAL EACH BEARING)

PROJECT NO. 17BP.8.R.132

RANDOLPH COUNTY

STATION: 15+62.50 -L-

SHEET 1 OF 2

STATE OF NORTH CAROLINA
DEPARTMENT OF TRANSPORTATION
RALEIGH

SUBSTRUCTURE
BENT No. 2

NORTH CAROLINA PROFESSIONAL SEAL 24939 ENGINEER BYRON E. ATKINSON
9/4/2019

DOCUMENT NOT CONSIDERED FINAL UNLESS ALL SIGNATURES COMPLETED

MI ENGINEERING
1011 SCHAUB DRIVE, SUITE 100
RALEIGH, NC 27606
(919) 851-6606
FIRM PE NUMBER : P-0671

ASSEMBLED BY:	B.E. LANNING	DATE:	04/19
CHECKED BY :	B.E. ATKINSON	DATE:	04/19
DESIGN ENGINEER OF RECORD:	B.E. ATKINSON	DATE:	04/19
DRAWN BY : DGE 4/10	REV. 11/14	MAA/TMG	
CHECKED BY : MKT 4/10			

REVISIONS							SHEET NO.
NO.	BY:	DATE:	NO.	BY:	DATE:		S-21
1			3				TOTAL SHEETS
2			4				24

STD. NO. DP_BT_33_75S_<50'

9/4/2019
1:27:57 PM
User: blanning
Filename: N:\NC Bridges\MI8005.02_CH Eng.Randolph 352 Br. Repl\17BP8R132\Structures\401_041_17BP8R132_SMU_B2A_750352.dgn

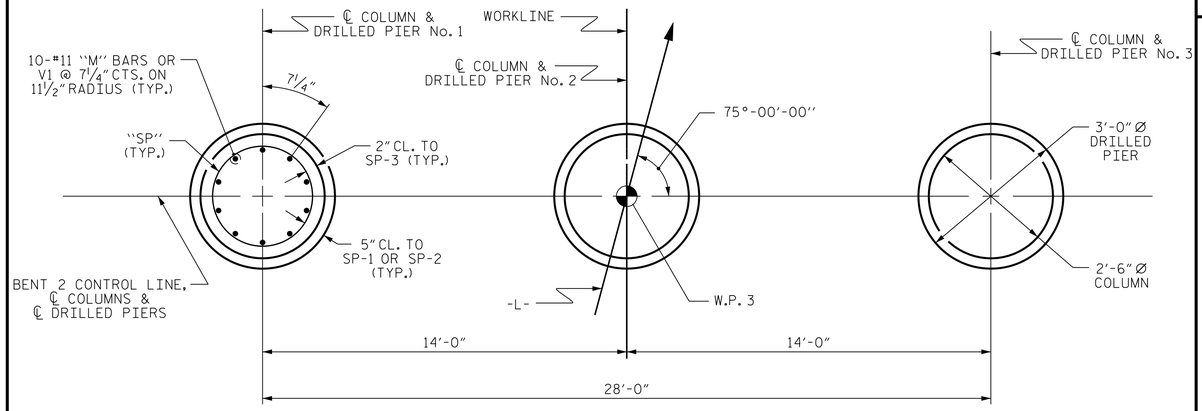

PLAN OF DRILLED PIERS & COLUMNS

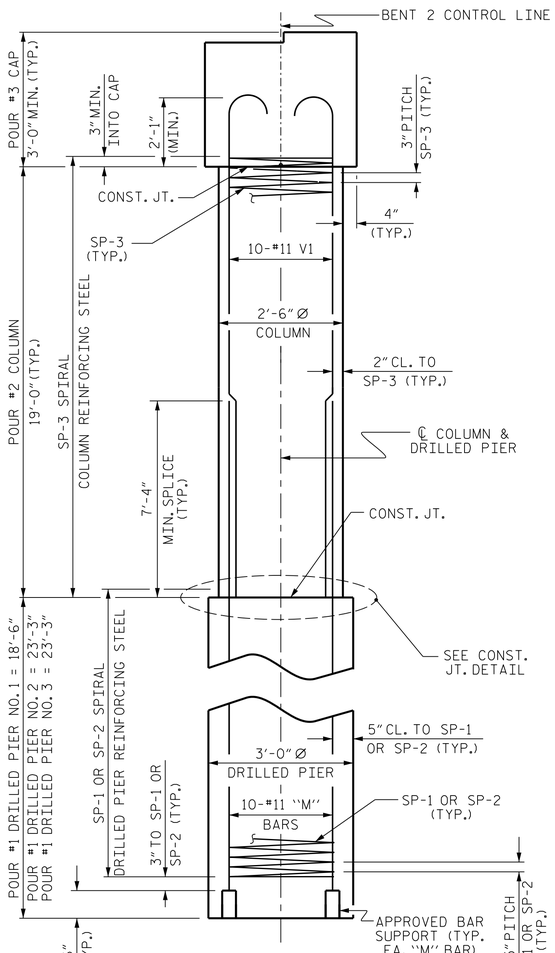

END ELEVATION

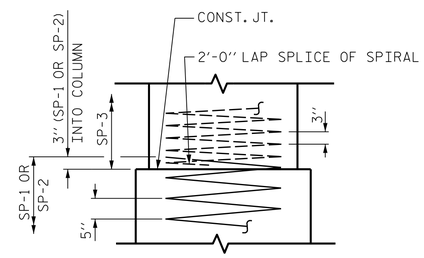

CONSTRUCTION JOINT DETAIL

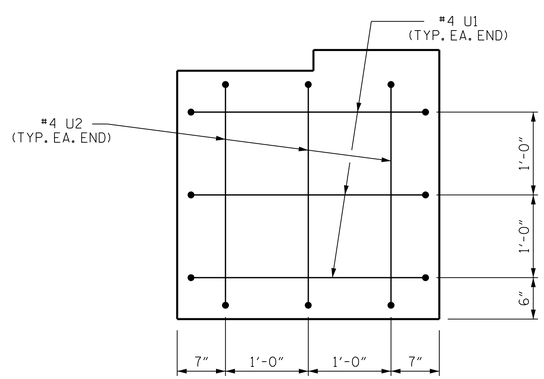

END OF CAP VIEW

(TYPICAL BOTH ENDS)

BAR TYPES

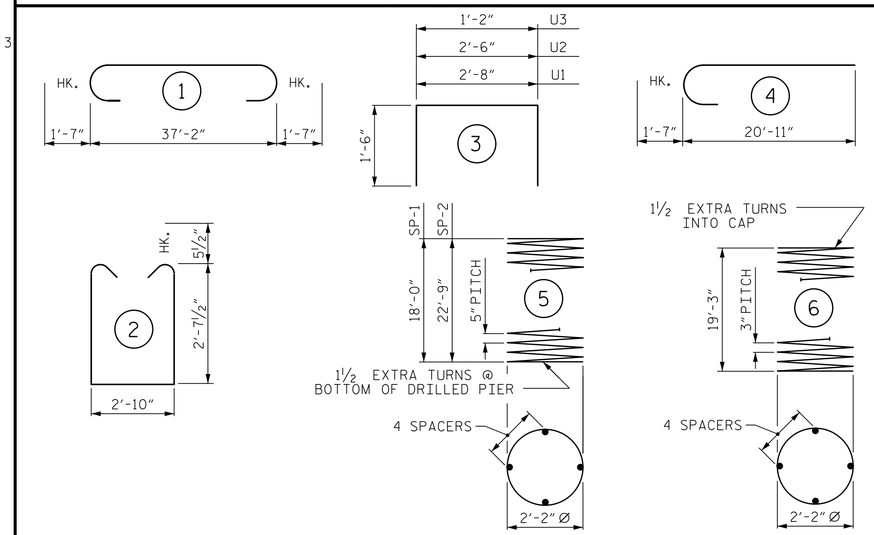

ALL BAR DIMENSIONS ARE OUT TO OUT

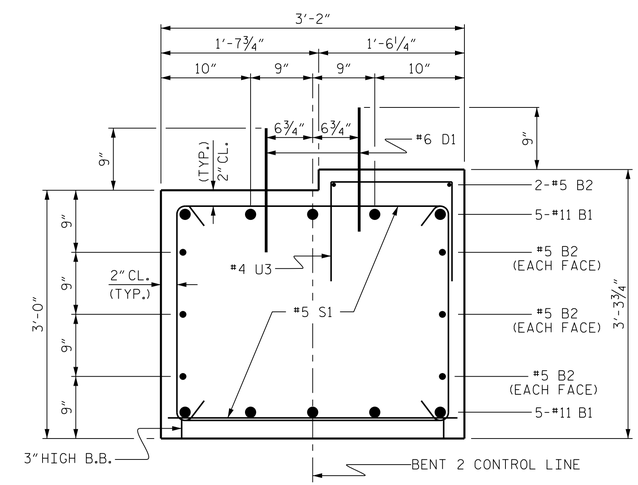

SECTION THRU CAP

BILL OF MATERIAL
FOR ONE BENT

BAR	NO.	SIZE	TYPE	LENGTH	WEIGHT
B1	10	#11	1	40'-4"	2143
B2	8	#5	STR	37'-4"	312
D1	44	#6	STR	1'-6"	99
M1	10	#11	STR	28'-4"	1505
M2	20	#11	STR	33'-1"	3515
S1	64	#5	2	9'-0"	601
U1	6	#4	3	5'-8"	23
U2	6	#4	3	5'-6"	22
U3	37	#4	3	4'-2"	103
V1	30	#11	4	22'-6"	3586
REINFORCING STEEL (FOR ONE BENT)					11909 LBS.
SP-1	1	✳	5	296'-9"	310
SP-2	2	✳	5	372'-6"	777
SP-3	3	✳✳	6	523'-1"	1048
SPIRAL COLUMN REINFORCING STEEL (FOR ONE BENT)					2135 LBS.

✳ THE SP-1 OR SP-2 SPIRAL REINFORCING STEEL SHALL BE W31 OR D-31 COLD DRAWN WIRE OR #5 PLAIN OR DEFORMED BAR

✳✳ THE SP-3 SPIRAL REINFORCING STEEL SHALL BE W20 OR D-20 COLD DRAWN WIRE OR #4 PLAIN OR DEFORMED BAR

CLASS A CONCRETE BREAKDOWN (FOR ONE BENT)

POUR #2 (COLUMNS)	10.4 C.Y.
POUR #3 (CAP)	14.3 C.Y.
TOTAL CLASS A CONCRETE	24.7 C.Y.

DRILLED PIERS: (FOR ONE BENT)

DRILLED PIER CONCRETE POUR #1 (DRILLED PIERS)	17.1 C.Y.
3'-0" Ø DRILLED PIER NOT IN SOIL	22.0 LIN. FT.
3'-0" Ø DRILLED PIER IN SOIL	43.0 LIN. FT.
PERMANENT STEEL CASING FOR 3'-0" Ø DRILLED PIER	19.5 LIN. FT.
CSL TUBES	278.0 LIN. FT.

PROJECT NO. 17BP.8.R.132
RANDOLPH COUNTY
STATION: 15+62.50 -L-

SHEET 2 OF 2

STATE OF NORTH CAROLINA
DEPARTMENT OF TRANSPORTATION
RALEIGH

SUBSTRUCTURE
BENT No. 2

NORTH CAROLINA PROFESSIONAL SEAL 24939 ENGINEER BYRON E. ATKINSON
9/4/2019

DOCUMENT NOT CONSIDERED FINAL UNLESS ALL SIGNATURES COMPLETED

MI ENGINEERING
1011 SCHAUB DRIVE, SUITE 100
RALEIGH, NC 27606
(919) 851-6606
FIRM PE NUMBER : P-0671

REVISIONS						SHEET NO.
NO.	BY:	DATE:	NO.	BY:	DATE:	S-22
1			3			TOTAL SHEETS
2			4			24

ASSEMBLED BY:	B.E. LANNING	DATE:	04/19
CHECKED BY :	B.E. ATKINSON	DATE:	04/19
DESIGN ENGINEER OF RECORD:	B.E. ATKINSON	DATE:	04/19
DRAWN BY : DGE 3/10	REV. 11/14	MAA/TMG	
CHECKED BY : MKT 3/10			

STD. NO. DP_BT_33_75S_<50'

9/4/2019
1:27:59 PM
User: blanning
Filename: N:\NC Bridges\M18005.02.CH Eng.Randolph 352 Br. Rep\17BP8R132\Structures\401_043_17BP8R132_SMU_B2B_750352.dgn

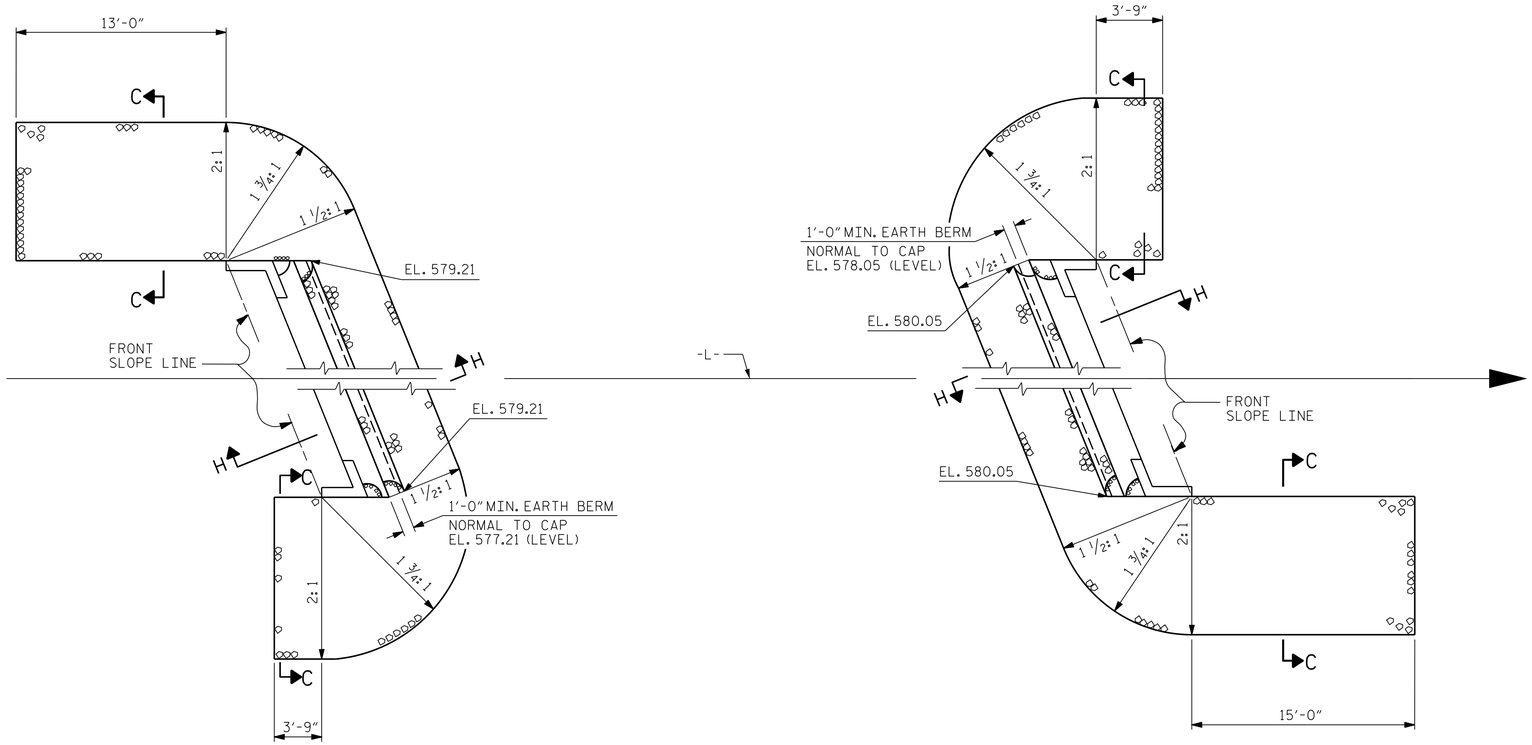

END BENT 1

END BENT 2

PLAN

ESTIMATED QUANTITIES		
BRIDGE @ STA. 15+62.50 -L-	RIP RAP CLASS II (2'-0" THICK)	GEOTEXTILE FOR DRAINAGE
	TONS	SQUARE YARDS
END BENT 1	410	455
END BENT 2	503	559

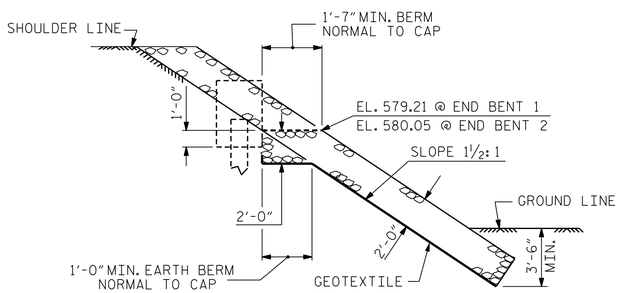

SECTION H-H

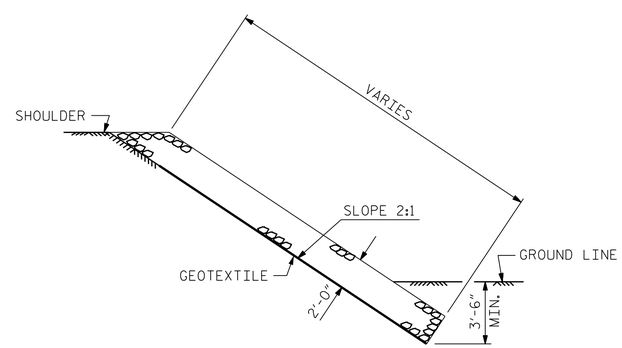

SECTION C-C

PROJECT NO. 17BP.8.R.132

RANDOLPH COUNTY

STATION: 15+62.50 -L-

STATE OF NORTH CAROLINA
DEPARTMENT OF TRANSPORTATION
RALEIGH

RIP RAP DETAILS

NORTH CAROLINA PROFESSIONAL SEAL 24939 ENGINEER BYRON E. ATKINSON
9/4/2019

DOCUMENT NOT CONSIDERED FINAL UNLESS ALL SIGNATURES COMPLETED

MI ENGINEERING
1011 SCHAUB DRIVE, SUITE 100
RALEIGH, NC 27606
(919) 851-6606
FIRM PE NUMBER : P-0671

REVISIONS						
NO.	BY:	DATE:	NO.	BY:	DATE:	
1			3			
2			4			

SHEET NO. S-23
TOTAL SHEETS 24

DRAWN BY :	B.E. LANNING	DATE :	04/19
CHECKED BY :	B.E. ATKINSON	DATE :	04/19
DESIGN ENGINEER OF RECORD :	B.E. ATKINSON	DATE :	04/19

9/4/2019
1:28:01 PM
User: blanning
Filename: N:\NC Bridges\MI8005.02_CH Eng.Randolph 352 Br. Rep\17BP8R132\Structures\401_045_17BP8R132_SMU_RR1_750352.dgn

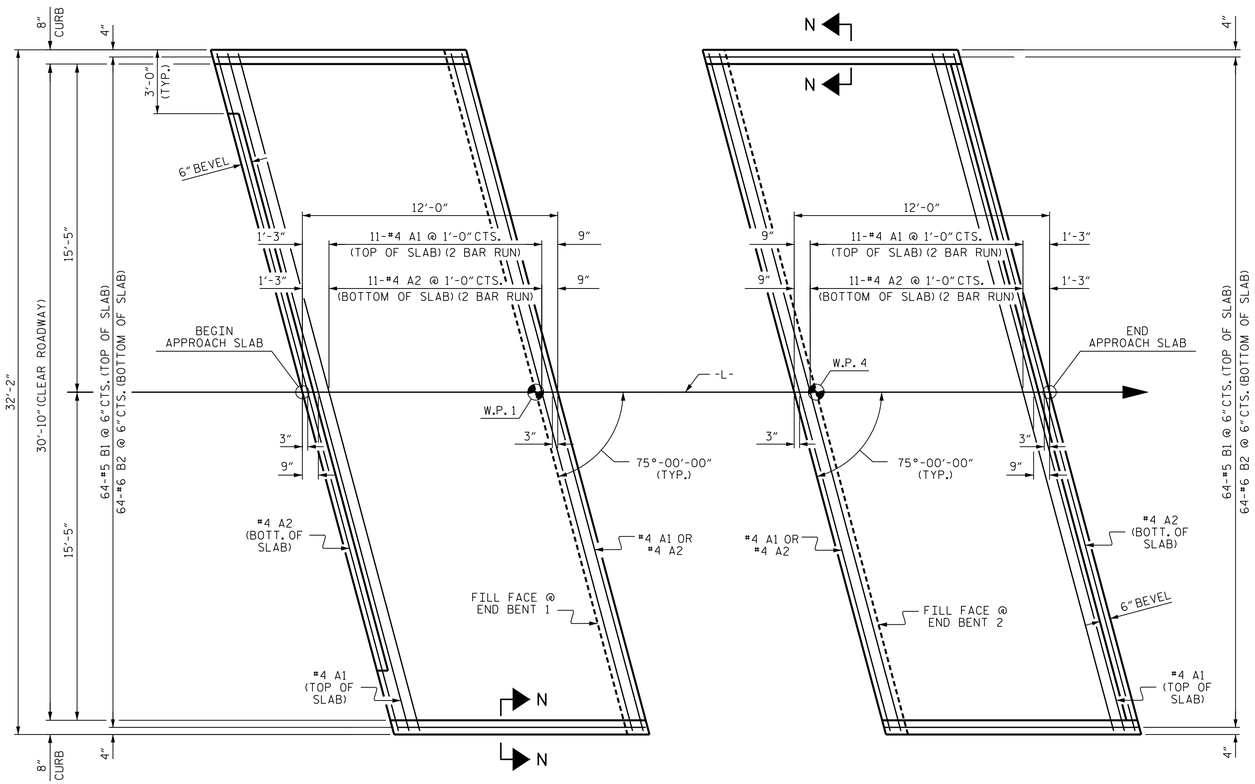

PLAN @ END BENT 1

PLAN @ END BENT 2

DIMENSIONS SHOWN ARE TYPICAL FOR BOTH APPROACH SLABS

NOTES

FOR BRIDGE APPROACH FILL INCLUDING GEOTEXTILE, 4" Ø DRAINAGE PIPE, AND SELECT MATERIAL BACKFILL, SEE ROADWAY PLANS.

GEOTEXTILE SHALL BE TYPE 1 IN ACCORDANCE WITH THE STANDARD SPECIFICATIONS SECTION 1056.

SELECT MATERIAL BACKFILL (CLASS V OR CLASS VI) SHALL BE IN ACCORDANCE WITH STANDARD SPECIFICATIONS SECTION 1016.

SELECT MATERIAL BACKFILL IS TO BE CONTINUOUS ALONG FILL FACE OF BACKWALL FROM OUTSIDE EDGE TO OUTSIDE EDGE OF APPROACH SLAB.

FOR THE 4" Ø DRAINAGE PIPE OUTLET(S), SEE ROADWAY STANDARD DRAWINGS.

AREA BETWEEN THE WINGWALL AND APPROACH SLAB SHALL BE GRADED TO DRAIN THE WATER AWAY FROM THE FILL FACE OF THE BRIDGE AND SHALL BE PAVED. SEE ROADWAY PLANS.

APPROACH SLAB GROOVING IS NOT REQUIRED.

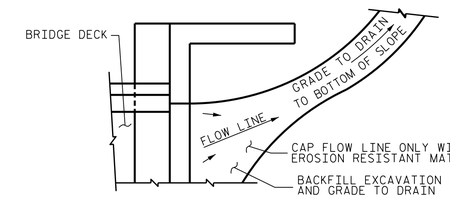

NOTE: IF THE APPROACH SLAB IS NOT CONSTRUCTED IMMEDIATELY AFTER THE BACKFILLING OF THE END BENT EXCAVATION, GRADE TO DRAIN TO THE BOTTOM OF THE SLOPE AND PROVIDE EROSION RESISTANT MATERIAL, SUCH AS FIBERGLASS ROVING OR AS DIRECTED BY THE ENGINEER TO PREVENT SOIL EROSION AND TO PROTECT THE AREA ADJACENT TO THE STRUCTURE. THE CONTRACTOR WILL BE REQUIRED TO REMOVE THESE MATERIALS PRIOR TO CONSTRUCTION OF THE APPROACH SLAB.

TEMPORARY DRAINAGE DETAIL

BILL OF MATERIAL

APPROACH SLAB AT EB #1

BAR	NO.	SIZE	TYPE	LENGTH	WEIGHT
* A1	26	#4	STR	17'-6"	304
A2	26	#4	STR	17'-5"	302
* B1	64	#5	STR	11'-1"	740
B2	64	#6	STR	11'-7"	1113
REINFORCING STEEL				LBS.	1415
* EPOXY COATED REINFORCING STEEL				LBS.	1044
CLASS AA CONCRETE				C. Y.	18.4

APPROACH SLAB AT EB #2

BAR	NO.	SIZE	TYPE	LENGTH	WEIGHT
* A1	26	#4	STR	17'-6"	304
A2	26	#4	STR	17'-5"	302
* B1	64	#5	STR	11'-1"	740
B2	64	#6	STR	11'-7"	1113
REINFORCING STEEL				LBS.	1415
* EPOXY COATED REINFORCING STEEL				LBS.	1044
CLASS AA CONCRETE				C. Y.	18.4

SPLICE LENGTHS

BAR SIZE	EPOXY COATED	UNCOATED
#4	2'-0"	1'-9"
#5	2'-6"	2'-2"
#6	3'-10"	2'-7"

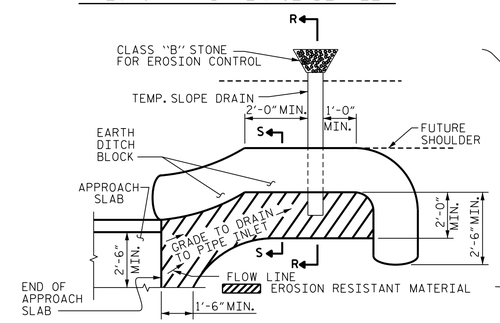

NOTE: IMMEDIATELY AFTER THE CONSTRUCTION OF THE APPROACH SLAB, THE CONTRACTOR SHALL PROVIDE TEMPORARY BERM AND SLOPE DRAIN. CONTRACTOR SHALL GRADE TO PIPE INLET AND PROVIDE EROSION RESISTANT MATERIAL AS SHOWN. THE EROSION RESISTANT MATERIAL SHALL BE EITHER 1) ASPHALT PLANT MIX, TYPE 1 OR TYPE 2, MIN. 2" DEPTH, 2) EROSION CONTROL MAT, OR 3) CONCRETE, AS DIRECTED BY THE ENGINEER. THE SLOPE DRAIN SHALL CONSIST OF A NON-PERFORATED TEMPORARY DRAINAGE PIPE, 12 INCHES IN DIAMETER.

PLAN VIEW

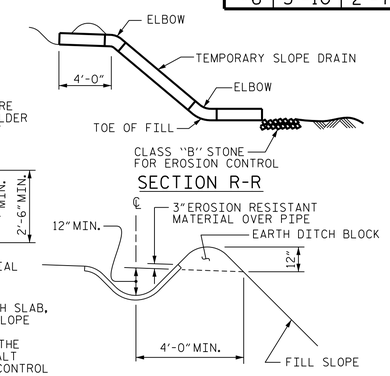

SECTION S-S

TEMPORARY BERM AND SLOPE DRAIN DETAILS

(TO BE USED WHEN SHOULDER BERM GUTTER IS REQUIRED)

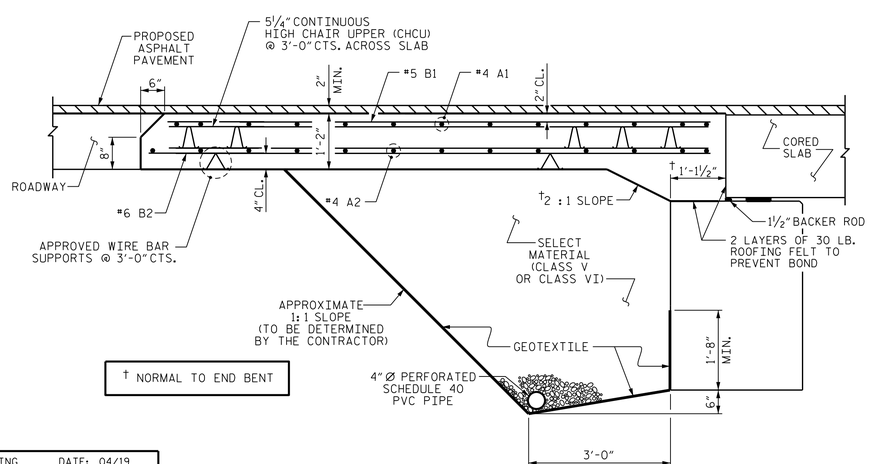

† NORMAL TO END BENT

SECTION THRU SLAB

(TYPE II - MODIFIED APPROACH FILL)

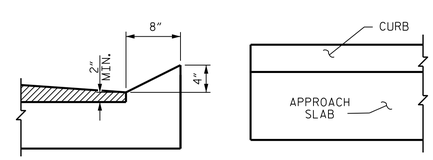

SECTION N-N

END OF CURB

CURB DETAILS

PROJECT NO. 17BP.8.R.132

RANDOLPH COUNTY

STATION: 15+62.50 -L-

STATE OF NORTH CAROLINA
DEPARTMENT OF TRANSPORTATION
RALEIGH

STANDARD
BRIDGE APPROACH SLAB
FOR PRESTRESSED CONCRETE
CORED SLAB UNIT
(SUB-REGIONAL TIER)
75° SKEW

NORTH CAROLINA PROFESSIONAL SEAL 24939 ENGINEER BYRON E. ATKINSON

9/4/2019

DOCUMENT NOT CONSIDERED FINAL UNLESS ALL SIGNATURES COMPLETED

MI ENGINEERING
1011 SCHAUB DRIVE, SUITE 100
RALEIGH, NC 27606
(919) 851-6606
FIRM PE NUMBER : P-0671

REVISIONS								SHEET NO.
NO.	BY:	DATE:	NO.	BY:	DATE:			S-24
1			3					TOTAL SHEETS
2			4					24

ASSEMBLED BY:	B.E. LANNING	DATE:	04/19
CHECKED BY :	B.E. ATKINSON	DATE:	04/19
DESIGN ENGINEER OF RECORD:	B.E. ATKINSON	DATE:	04/19
DRAWN BY : SHS/MAA 5-09	REV. 12-17	MAA/THC	
CHECKED BY : BCH 5-09			

STD. NO. BAS_33_75S

9/4/2019
1:28:03 PM
User: blanning
Filename: N:\NC Bridges\M18005.02.CH Eng.Randolph 352 Br. Repl\17BP8R132\Structures\401_047_17BP8R132_SMU_BAS1_750352.dgn

STANDARD NOTES

DESIGN DATA:

SPECIFICATIONS	A.A.S.H.T.O. (CURRENT)
LIVE LOAD	SEE PLANS
IMPACT ALLOWANCE	SEE A.A.S.H.T.O.
STRESS IN EXTREME FIBER OF STRUCTURAL STEEL - AASHTO M270 GRADE 36	20,000 LBS. PER SQ. IN.
- AASHTO M270 GRADE 50W	27,000 LBS. PER SQ. IN.
- AASHTO M270 GRADE 50	27,000 LBS. PER SQ. IN.
REINFORCING STEEL IN TENSION - GRADE 60	24,000 LBS. PER SQ. IN.
CONCRETE IN COMPRESSION	1,200 LBS. PER SQ. IN.
CONCRETE IN SHEAR	SEE A.A.S.H.T.O.
STRUCTURAL TIMBER - TREATED OR UNTREATED EXTREME FIBER STRESS	1,800 LBS. PER SQ. IN.
COMPRESSION PERPENDICULAR TO GRAIN OF TIMBER	375 LBS. PER SQ. IN.
EQUIVALENT FLUID PRESSURE OF EARTH	30 LBS. PER CU. FT. (MINIMUM)

MATERIAL AND WORKMANSHIP:

EXCEPT AS MAY OTHERWISE BE SPECIFIED ON PLANS OR IN THE SPECIAL PROVISIONS, ALL MATERIAL AND WORKMANSHIP SHALL BE IN ACCORDANCE WITH THE 2018 "STANDARD SPECIFICATIONS FOR ROADS AND STRUCTURES" OF THE N.C. DEPARTMENT OF TRANSPORTATION.

STEEL SHEET PILING FOR PERMANENT OR TEMPORARY APPLICATIONS SHALL BE HOT ROLLED.

CONCRETE:

UNLESS OTHERWISE REQUIRED ON PLANS, CLASS A CONCRETE SHALL BE USED FOR ALL PORTIONS OF ALL STRUCTURES WITH THE EXCEPTION THAT: CLASS AA CONCRETE SHALL BE USED IN BRIDGE SUPERSTRUCTURES, ABUTMENT BACKWALLS, AND APPROACH SLABS; AND CLASS B CONCRETE SHALL BE USED FOR SLOPE PROTECTION AND RIP RAP.

CONCRETE CHAMFERS:

UNLESS OTHERWISE NOTED ON THE PLANS, ALL EXPOSED CORNERS ON STRUCTURES SHALL BE CHAMFERED 3/4" WITH THE FOLLOWING EXCEPTIONS: TOP CORNERS OF CURBS MAY BE ROUNDED TO 1 1/2" RADIUS WHICH IS BUILT INTO CURB FORMS; CORNERS OF TRANSVERSE FLOOR EXPANSION JOINTS SHALL BE ROUNDED WITH A 1/4" FINISHING TOOL UNLESS OTHERWISE REQUIRED ON PLANS; AND CORNERS OF EXPANSION JOINTS IN THE ROADWAY FACES AND TOPS OF CURBS AND SIDEWALKS SHALL BE ROUNDED TO A 1/4" RADIUS WITH A FINISHING STONE OR TOOL UNLESS OTHERWISE REQUIRED ON PLANS.

DOWELS:

DOWELS WHEN INDICATED ON PLANS AS FOR CULVERT EXTENSIONS, SHALL BE EMBEDDED AT LEAST 12" INTO THE OLD CONCRETE AND GROUTED INTO PLACE WITH 1:2 CEMENT MORTAR.

ALLOWANCE FOR DEAD LOAD DEFLECTION, SETTLEMENT, ETC. IN CASTING SUPERSTRUCTURES:

BRIDGES SHALL BE BUILT ON THE GRADE OR VERTICAL CURVE SHOWN ON PLANS. SLABS, CURBS AND PARAPETS SHALL CONFORM TO THE GRADE OR CURVE.

ALL DIMENSIONS WHICH ARE GIVEN IN SECTION AND ARE AFFECTED BY DEAD LOAD DEFLECTIONS ARE DIMENSIONS AT CENTER LINE OF BEARING UNLESS OTHERWISE NOTED ON PLANS. IN SETTING FORMS FOR STEEL BEAM BRIDGES AND PRESTRESSED CONCRETE GIRDER BRIDGES, ADJUSTMENTS SHALL BE MADE DUE TO THE DEAD LOAD DEFLECTIONS FOR THE ELEVATIONS SHOWN. WHERE BLOCKS ARE SHOWN OVER BEAMS FOR BUILDING UP TO THE SLAB, THE VERTICAL DIMENSIONS OF THE BLOCKS SHALL BE ADJUSTED BETWEEN BEARINGS TO COMPENSATE FOR DEAD LOAD DEFLECTIONS, VERTICAL CURVE ORDINATE, AND ACTUAL BEAM CAMBER. WHERE BOTTOM OF SLAB IS IN LINE WITH BOTTOM OF TOP FLANGES, DEPTH OF SLAB BETWEEN BEARINGS SHALL BE ADJUSTED TO COMPENSATE FOR DEAD LOAD DEFLECTION, VERTICAL CURVE ORDINATE, AND ACTUAL BEAM CAMBER.

IN SETTING FALSEWORK AND FORMS FOR REINFORCED CONCRETE SPANS, AN ALLOWANCE SHALL BE MADE FOR DEAD LOAD DEFLECTIONS, SETTLEMENT OF FALSEWORK, AND PERMANENT CAMBER WHICH SHALL BE PROVIDED FOR IN ADDITION TO THE ELEVATIONS SHOWN. AFTER REMOVAL OF THE FALSEWORK, THE FINISHED STRUCTURES SHALL CONFORM TO THE PROFILE AND ELEVATIONS SHOWN ON THE PLANS AND CONSTRUCTION ELEVATIONS FURNISHED BY THE ENGINEER.

DETAILED DRAWINGS FOR FALSEWORK OR FORMS FOR BRIDGE SUPERSTRUCTURE AND ANY STRUCTURE OR PARTS OF A STRUCTURE AS NOTED ON THE PLANS SHALL BE SUBMITTED TO THE ENGINEER FOR APPROVAL BEFORE CONSTRUCTION OF THE FALSEWORK OR FORMS IS STARTED.

REINFORCING STEEL:

ALL REINFORCING STEEL SHALL BE DEFORMED. DIMENSIONS RELATIVE TO PLACEMENT OF REINFORCING ARE TO CENTERS OF BARS UNLESS OTHERWISE INDICATED IN THE PLANS. DIMENSIONS ON BAR DETAILS ARE TO CENTERS OF BARS OR ARE OUT TO OUT AS INDICATED ON PLANS.

WIRE BAR SUPPORTS SHALL BE PROVIDED FOR REINFORCING STEEL WHERE INDICATED ON THE PLANS. WHEN BAR SUPPORT PIECES ARE PLACED IN CONTINUOUS LINES, THEY SHALL BE SO PLACED THAT THE ENDS OF THE SUPPORTING WIRES SHALL BE LAPPED TO LOCK LEGS ON ADJOINING PIECES.

STRUCTURAL STEEL:

AT THE CONTRACTOR'S OPTION, HE MAY SUBSTITUTE 7/8" Ø SHEAR STUDS FOR THE 3/4" Ø STUDS SPECIFIED ON THE PLANS. THIS SUBSTITUTION SHALL BE MADE AT THE RATE OF 3 - 7/8" Ø STUDS FOR 4 - 3/4" Ø STUDS, AND STUD SPACING CHANGES SHALL BE MADE AS NECESSARY TO PROVIDE THE SAME EQUIVALENT NUMBER OF 7/8" Ø STUDS ALONG THE BEAM AS SHOWN FOR 3/4" Ø STUDS BASED ON THE RATIO OF 3 - 7/8" Ø STUDS FOR 4 - 3/4" Ø STUDS. STUDS OF THE LENGTH SPECIFIED ON THE PLANS MUST BE PROVIDED. THE MAXIMUM SPACING SHALL BE 2'-0".

EXCEPT AT THE INTERIOR SUPPORTS OF CONTINUOUS BEAMS WHERE THE COVER PLATE IS IN CONTACT WITH BEARING PLATE, THE CONTRACTOR MAY, AT HIS OPTION, SUBSTITUTE FOR THE COVER PLATES DESIGNATED ON THE PLANS COVER PLATES OF THE EQUIVALENT AREA PROVIDED THESE PLATES ARE AT LEAST 5/16" IN THICKNESS AND DO NOT EXCEED A WIDTH EQUAL TO THE FLANGE WIDTH LESS 2" OR A THICKNESS EQUAL TO 2 TIMES THE FLANGE THICKNESS. THE SIZE OF FILLET WELDS SHALL CONFORM TO THE REQUIREMENTS OF THE CURRENT ANSI/AASHTO/AWS "BRIDGE WELDING CODE". ELECTROSLAG WELDING WILL NOT BE PERMITTED.

WITH THE SOLE EXCEPTION OF EDGES AT SURFACES WHICH BEAR ON OTHER SURFACES, ALL SHARP EDGES AND ENDS OF SHAPES AND PLATES SHALL BE SLIGHTLY ROUNDED BY SUITABLE MEANS TO A RADIUS OF APPROXIMATELY 1/16 INCH OR EQUIVALENT FLAT SURFACE AT A SUITABLE ANGLE PRIOR TO PAINTING, GALVANIZING, OR METALLIZING.

HANDRAILS AND POSTS:

METAL STANDARDS AND FACES OF THE CONCRETE END POSTS FOR THE METAL RAIL SHALL BE SET NORMAL TO THE GRADE OF THE CURB, UNLESS OTHERWISE SHOWN ON PLANS. THE METAL RAIL AND TOPS OF CONCRETE POSTS USED WITH THE ALUMINUM RAIL SHALL BE BUILT PARALLEL TO THE GRADE OF THE CURB.

METAL HANDRAILS SHALL BE IN ACCORDANCE WITH THE PLANS. RAILS SHALL BE AS MANUFACTURED FOR BRIDGE RAILING. CASTINGS SHALL BE OF A UNIFORM APPEARANCE. FINS AND OTHER DEFORMATIONS RESULTING FROM CASTING OR OTHERWISE SHALL BE REMOVED IN A MANNER SO THAT A UNIFORM COLORING OF THE COMPLETED CASTING SHALL BE OBTAINED. CASTINGS WITH DISCOLORATIONS OR OF NON-UNIFORM COLORING WILL NOT BE ACCEPTED. CERTIFIED MILL REPORTS ARE REQUIRED FOR METAL RAILS AND POSTS.

SPECIAL NOTES:

GENERALLY, IN CASE OF DISCREPANCY, THIS STANDARD SHEET OF NOTES SHALL GOVERN OVER THE SPECIFICATIONS, BUT THE REMAINDER OF THE PLANS SHALL GOVERN OVER NOTES HEREON, AND SPECIAL PROVISIONS SHALL GOVERN OVER ALL. SEE SPECIFICATIONS ARTICLE 105-4.

ENGLISH

JANUARY, 1990