This electronic collection of documents is provided for the convenience of the user and is Not a Certified Document-

The documents contained herein were originally issued and sealed by the individuals whose names and license numbers appear on each page, on the dates appearing with their signature on that page.
This file or an individual page shall not be considered a certified document.

DocuSign Envelope ID: 63B99F10-5B56-439E-BCE5-B5D5838AF970

09/08/99

TIP PROJECT: 17BP.9.R.25

CONTRACT: DI00136

STATE	STATE PROJECT REFERENCE NO.	SHEET NO.	TOTAL SHEETS
N.C.	17BP.9.R.25	1	

W.B.S. NO.	F.A. PROJ. NO.	DESCRIPTION
17BP.9.R.25		PE
17BP.9.R.25		R /W, UTIL.
17BP.9.R.25		CONST.

STATE OF NORTH CAROLINA
DIVISION OF HIGHWAYS

DAVIE COUNTY

LOCATION: BRIDGE NO. 83 OVER SUGAR CREEK ON SR 1436 (PINEBROOK SCHOOL ROAD)

TYPE OF WORK: WIDENING, GRADING, PAVING, DRAINAGE, AND STRUCTURE

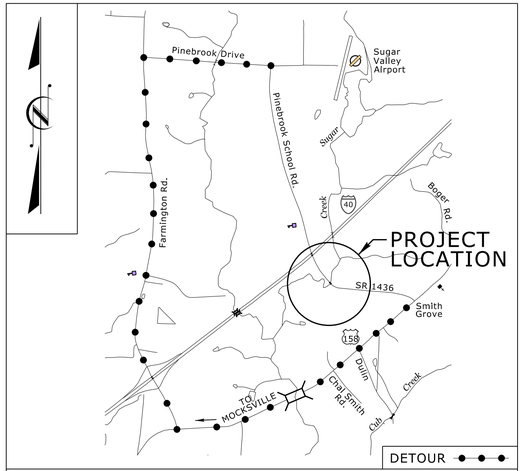

VICINITY MAP

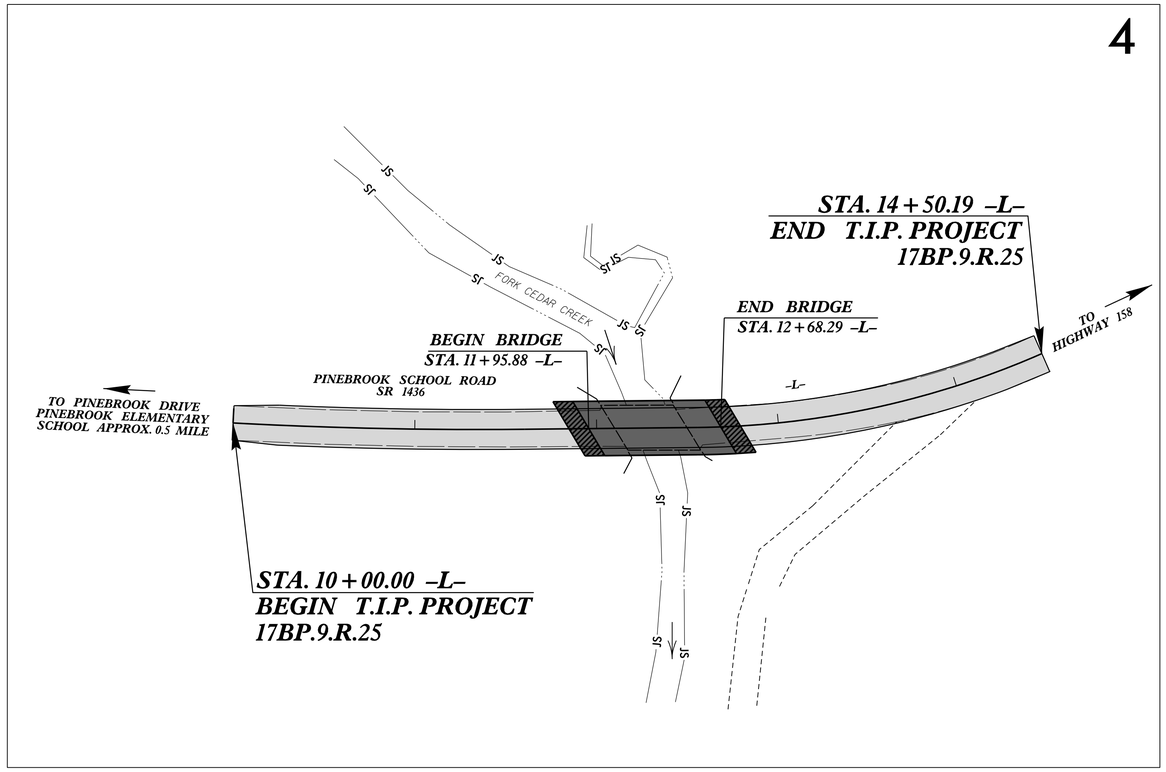

DOCUMENT NOT CONSIDERED FINAL UNLESS ALL SIGNATURES COMPLETED

GRAPHIC SCALES

50 25 0 50 100
PLANS

50 25 0 50 100
PROFILE (HORIZONTAL)

10 5 0 10 20
PROFILE (VERTICAL)

DESIGN DATA

ADT 2014 = 1575
V = 35 MPH
FUNC CLASS = RURAL LOCAL

PROJECT LENGTH

LENGTH ROADWAY T.I.P. PROJECT 17BP.9.R.25	=	0.071 MILES
LENGTH STRUCTURES T.I.P. PROJECT 17BP.9.R.25	=	0.014 MILES
TOTAL LENGTH T.I.P. PROJECT 17BP.9.R.25	=	0.085 MILES

Prepared in the Office of:
ATKINS
1616 E. MILLBROOK ROAD, SUITE #310
RALEIGH, NORTH CAROLINA 27609
(919) 876-6888 NCBEES #F-0326

2012 STANDARD SPECIFICATIONS

RIGHT OF WAY DATE:
JUNE 19, 2015

LETTING DATE:
APRIL 27, 2016

CLINTON MORGAN, P.E.
PROJECT ENGINEER

IAN BERDEAU, E.I.
PROJECT DESIGN ENGINEER

MATTHEW JONES, P.E.
NCDOT CONTACT

HYDRAULICS ENGINEER
DocuSigned by: Ian Roodin 3/31/2016 P.E.
SIGNATURE:
NORTH CAROLINA PROFESSIONAL SEAL 041957 ENGINEER DEAN ROBERT GOODISON

ROADWAY DESIGN ENGINEER
DocuSigned by: Clinton J. Morgan 3/31/2016 P.E.
SIGNATURE:
NORTH CAROLINA PROFESSIONAL SEAL 024929 ENGINEER CLINTON J. MORGAN

DIVISION OF HIGHWAYS
STATE OF NORTH CAROLINA
STATE OF NORTH CAROLINA DEPARTMENT OF TRANSPORTATION
P.E.
STATE HIGHWAY DESIGN ENGINEER

29-MAR-2016 10:23
R:\290083\Roadway\Proj\290083_Rdy_tsh.dgn
$$$$USERNAME$$$$

DocuSign Envelope ID: 63B99F10-5B56-439E-BCE5-B5D5838AF970

8/17/99

PROJECT REFERENCE NO.	SHEET NO.
17BP.9.R.25	1A-1

ROADWAY DESIGN ENGINEER

NORTH CAROLINA PROFESSIONAL SEAL 024929 ENGINEER CLINTON J. MORGAN

DocuSigned by: Clinton J. Morgan 8/31/2016

DOCUMENT NOT CONSIDERED FINAL UNLESS ALL SIGNATURES COMPLETED

INDEX OF SHEETS

SHEET NUMBER	SHEET
1	TITLE SHEET
1A-1	INDEX OF SHEETS, GENERAL NOTES, AND LIST OF STANDARD DRAWINGS
1B-1	CONVENTIONAL SYMBOLS
1C-1 THRU 1C-2	SURVEY CONTROL SHEETS
2A-1	PAVEMENT SCHEDULE, TYPICAL SECTIONS, AND WEDGING DETAILS
2C-1	GUARDRAIL TYPE III ANCHOR DETAILS
3B-1	DRAINAGE SUMMARY, GUARDRAIL SUMMARY EARTHWORK SUMMARY, ASPHALT PAVEMENT REMOVAL SUMMARY, AND SHOULDER BERM GUTTER SUMMARY
4	PLAN AND PROFILE SHEET
TMP-1 THRU TMP-2	TRAFFIC CONTROL PLANS
EC-1 THRU EC-4	EROSION CONTROL PLANS
UO-1 THRU UO- 2	UTILITIES BY OTHERS PLANS
X-0 THRU X-0A	CROSS SECTION SUMMARY AND INDEX SHEET
X-1 THRU X-3	CROSS-SECTIONS
S-1 THRU S-13	STRUCTURE PLANS

GENERAL NOTES:

2012 SPECIFICATIONS
EFFECTIVE: 01-17-2012
REVISED: 07-30-2012

GRADING AND SURFACING OR RESURFACING AND WIDENING:

THE GRADE LINES SHOWN DENOTE THE FINISHED ELEVATION OF THE PROPOSED SURFACING AT GRADE POINTS SHOWN ON THE TYPICAL SECTIONS. WHERE NO GRADE LINES ARE SHOWN, THE PROFILES SHOWN DENOTE THE TOP ELEVATION OF THE EXISTING PAVEMENT ALONG THE CENTER LINE OF SURVEY ON WHICH THE PROPOSED RESURFACING WILL BE PLACED. GRADE LINES MAY BE ADJUSTED BY THE ENGINEER IN ORDER TO SECURE A PROPER TIE-IN.

CLEARING:

CLEARING ON THIS PROJECT SHALL BE PERFORMED TO THE LIMITS ESTABLISHED BY METHOD III.

SUPERELEVATION:

ALL CURVES ON THIS PROJECT SHALL BE SUPERELEVATED IN ACCORDANCE WITH STD. NO. 225.04
SUPERELEVATION IS TO BE REVOLVED ABOUT THE GRADE POINTS SHOWN ON THE TYPICAL SECTIONS.

SHOULDER CONSTRUCTION:

ASPHALT, EARTH, AND CONCRETE SHOULDER CONSTRUCTION ON THE HIGH SIDE OF SUPERELEVATED CURVES SHALL BE IN ACCORDANCE WITH

SIDE ROADS:

THE CONTRACTOR WILL BE REQUIRED TO DO ALL NECESSARY WORK TO PROVIDE SUITABLE CONNECTIONS WITH ALL ROADS, STREETS, AND DRIVES ENTERING THIS PROJECT. THIS WORK WILL BE PAID FOR AT THE CONTRACT UNIT PRICE FOR THE PARTICULAR ITEMS INVOLVED.

GUARDRAIL:

THE GUARDRAIL LOCATIONS SHOWN ON THE PLANS MAY BE ADJUSTED DURING CONSTRUCTION AS DIRECTED BY THE ENGINEER. THE CONTRACTOR SHOULD CONSULT WITH THE ENGINEER PRIOR TO ORDERING GUARDRAIL MATERIAL.

END BENTS:

THE ENGINEER SHALL CHECK THE STRUCTURE END BENT PLANS, DETAILS, AND CROSS-SECTION PRIOR TO SETTING OF THE SLOPE STAKES FOR THE EMBANKMENT OR EXCAVATION APPROACHING A BRIDGE.

UTILITIES:

UTILITY OWNERS ON THIS PROJECT ARE:

YADKIN VALLEY TELEPHONE COMPANY

ANY RELOCATION OF EXISTING UTILITIES WILL BE ACCOMPLISHED BY OTHERS.

RIGHT-OF-WAY MARKERS:

ALL RIGHT-OF-WAY MARKERS ON THIS PROJECT SHALL BE PLACED BY CONTRACT.

EFF. 01-17-2012
REV. 10-30-2012

2012 ROADWAY ENGLISH STANDARD DRAWINGS

The following Roadway Standards as appear in "Roadway Standard Drawings" Highway Design Branch - N. C. Department of Transportation - Raleigh, N. C., Dated January, 2012 are applicable to this project and by reference hereby are considered a part of these plans:

STD.NO.	TITLE
DIVISION 2 - EARTHWORK	
200.03	Method of Clearing - Method III
225.02	Guide for Grading Subgrade - Secondary and Local
225.04	Method of Obtaining Superelevation - Two Lane Pavement
DIVISION 3 - PIPE CULVERTS	
300.01	Method of Pipe Installation
DIVISION 4 - MAJOR STRUCTURES	
422.10	Reinforced Bridge Approach Fills
DIVISION 5 - SUBGRADE, BASES AND SHOULDERS	
560.01	Method of Shoulder Construction - High Side of Superelevated Curve - Method I
DIVISION 8 - INCIDENTALS	
840.00	Concrete Base Pad for Drainage Structures
840.18	Concrete Grated Drop Inlet Type 'B' - 12" thru 36" Pipe
840.27	Brick Grated Drop Inlet Type 'B' - 12" thru 36" Pipe
840.29	Frames and Narrow Slot Flat Grates
840.35	Traffic Bearing Grated Drop Inlet - for Cast Iron Double Frame and Grate
846.04	Drop Inlet Installation in Shoulder Berm Gutter
862.01	Guardrail Placement
862.02	Guardrail Installation
862.03	Structure Anchor Units (Details in Lieu of Standard Drawing as March 2013 Letting)
876.02	Guide for Rip Rap at Pipe Outlets

29-AUG-2016 10:23
R:\Roadway\Proj\2900083_Rdy_psh_1A.dgn
$$USERNAME$$

DocuSign Envelope ID: 63B99F10-5B56-439E-BCE5-B5D5838AF970

04/16/11

PROJECT REFERENCE NO.	SHEET NO.
17BP.9.R.25	1B-1

Note: Not to Scale

****S.U.E. = Subsurface Utility Engineering***

STATE OF NORTH CAROLINA
DIVISION OF HIGHWAYS

CONVENTIONAL PLAN SHEET SYMBOLS

BOUNDARIES AND PROPERTY:

- State Line
- County Line
- Township Line
- City Line
- Reservation Line
- Property Line
- Existing Iron Pin — EIP
- Property Corner
- Property Monument — ECM
- Parcel/Sequence Number — 123
- Existing Fence Line
- Proposed Woven Wire Fence
- Proposed Chain Link Fence
- Proposed Barbed Wire Fence
- Existing Wetland Boundary — WLB
- Proposed Wetland Boundary — WLB
- Existing Endangered Animal Boundary — EAB
- Existing Endangered Plant Boundary — EPB
- Known Soil Contamination: Area or Site
- Potential Soil Contamination: Area or Site

BUILDINGS AND OTHER CULTURE:

- Gas Pump Vent or U/G Tank Cap
- Sign — S
- Well — W
- Small Mine
- Foundation
- Area Outline
- Cemetery
- Building
- School
- Church
- Dam

HYDROLOGY:

- Stream or Body of Water
- Hydro, Pool or Reservoir
- Jurisdictional Stream — JS
- Buffer Zone 1 — BZ 1
- Buffer Zone 2 — BZ 2
- Flow Arrow
- Disappearing Stream
- Spring
- Wetland
- Proposed Lateral, Tail, Head Ditch — FLOW
- False Sump

RAILROADS:

- Standard Gauge — CSX TRANSPORTATION
- RR Signal Milepost — MILEPOST 35
- Switch — SWITCH
- RR Abandoned
- RR Dismantled

RIGHT OF WAY:

- Baseline Control Point
- Existing Right of Way Marker
- Existing Right of Way Line
- Proposed Right of Way Line — RW
- Proposed Right of Way Line with Iron Pin and Cap Marker — RW
- Proposed Right of Way Line with Concrete or Granite Marker — RW
- Existing Control of Access — CA
- Proposed Control of Access — CA
- Existing Easement Line — E
- Proposed Temporary Construction Easement — E
- Proposed Temporary Drainage Easement — TDE
- Proposed Permanent Drainage Easement — PDE
- Proposed Permanent Drainage / Utility Easement — DUE
- Proposed Permanent Utility Easement — PUE
- Proposed Temporary Utility Easement — TUE
- Proposed Aerial Utility Easement — AUE
- Proposed Permanent Easement with Iron Pin and Cap Marker

ROADS AND RELATED FEATURES:

- Existing Edge of Pavement
- Existing Curb
- Proposed Slope Stakes Cut — C
- Proposed Slope Stakes Fill — F
- Proposed Curb Ramp — CR
- Existing Metal Guardrail
- Proposed Guardrail
- Existing Cable Guiderail
- Proposed Cable Guiderail
- Equality Symbol
- Pavement Removal

VEGETATION:

- Single Tree
- Single Shrub
- Hedge
- Woods Line
- Orchard
- Vineyard — Vineyard

EXISTING STRUCTURES:

MAJOR:

- Bridge, Tunnel or Box Culvert — CONC
- Bridge Wing Wall, Head Wall and End Wall — CONC WW

MINOR:

- Head and End Wall — CONC HW
- Pipe Culvert
- Footbridge
- Drainage Box: Catch Basin, DI or JB — CB
- Paved Ditch Gutter
- Storm Sewer Manhole — S
- Storm Sewer — S

UTILITIES:

POWER:

- Existing Power Pole
- Proposed Power Pole
- Existing Joint Use Pole
- Proposed Joint Use Pole
- Power Manhole — P
- Power Line Tower
- Power Transformer
- U/G Power Cable Hand Hole
- H-Frame Pole
- Recorded U/G Power Line — P
- Designated U/G Power Line (S.U.E.*) — P

TELEPHONE:

- Existing Telephone Pole
- Proposed Telephone Pole
- Telephone Manhole — T
- Telephone Booth
- Telephone Pedestal — T
- Telephone Cell Tower
- U/G Telephone Cable Hand Hole — HH
- Recorded U/G Telephone Cable — T
- Designated U/G Telephone Cable (S.U.E.*) — T
- Recorded U/G Telephone Conduit — TC
- Designated U/G Telephone Conduit (S.U.E.*) — TC
- Recorded U/G Fiber Optics Cable — T FO
- Designated U/G Fiber Optics Cable (S.U.E.*) — T FO

WATER:

- Water Manhole — W
- Water Meter
- Water Valve
- Water Hydrant
- Recorded U/G Water Line — W
- Designated U/G Water Line (S.U.E.*) — W
- Above Ground Water Line — A/G Water

TV:

- TV Satellite Dish
- TV Pedestal — C
- TV Tower
- U/G TV Cable Hand Hole — HH
- Recorded U/G TV Cable — TV
- Designated U/G TV Cable (S.U.E.*) — TV
- Recorded U/G Fiber Optic Cable — TV FO
- Designated U/G Fiber Optic Cable (S.U.E.*) — TV FO

GAS:

- Gas Valve
- Gas Meter
- Recorded U/G Gas Line — G
- Designated U/G Gas Line (S.U.E.*) — G
- Above Ground Gas Line — A/G Gas

SANITARY SEWER:

- Sanitary Sewer Manhole
- Sanitary Sewer Cleanout
- U/G Sanitary Sewer Line — SS
- Above Ground Sanitary Sewer — A/G Sanitary Sewer
- Recorded SS Forced Main Line — FSS
- Designated SS Forced Main Line (S.U.E.*) — FSS

MISCELLANEOUS:

- Utility Pole
- Utility Pole with Base
- Utility Located Object
- Utility Traffic Signal Box — S
- Utility Unknown U/G Line — ?UTL
- U/G Tank; Water, Gas, Oil
- Underground Storage Tank, Approx. Loc. — UST
- A/G Tank; Water, Gas, Oil
- Geoenvironmental Boring
- U/G Test Hole (S.U.E.*)
- Abandoned According to Utility Records — AATUR
- End of Information — E.O.I.

DocuSign Envelope ID: 63B99F10-5B56-439E-BCE5-B5D5838AF970

PROJECT REFERENCE NO.	SHEET NO.
29-0083	1C-1
Location and Surveys	

SURVEY CONTROL SHEET 29-0083

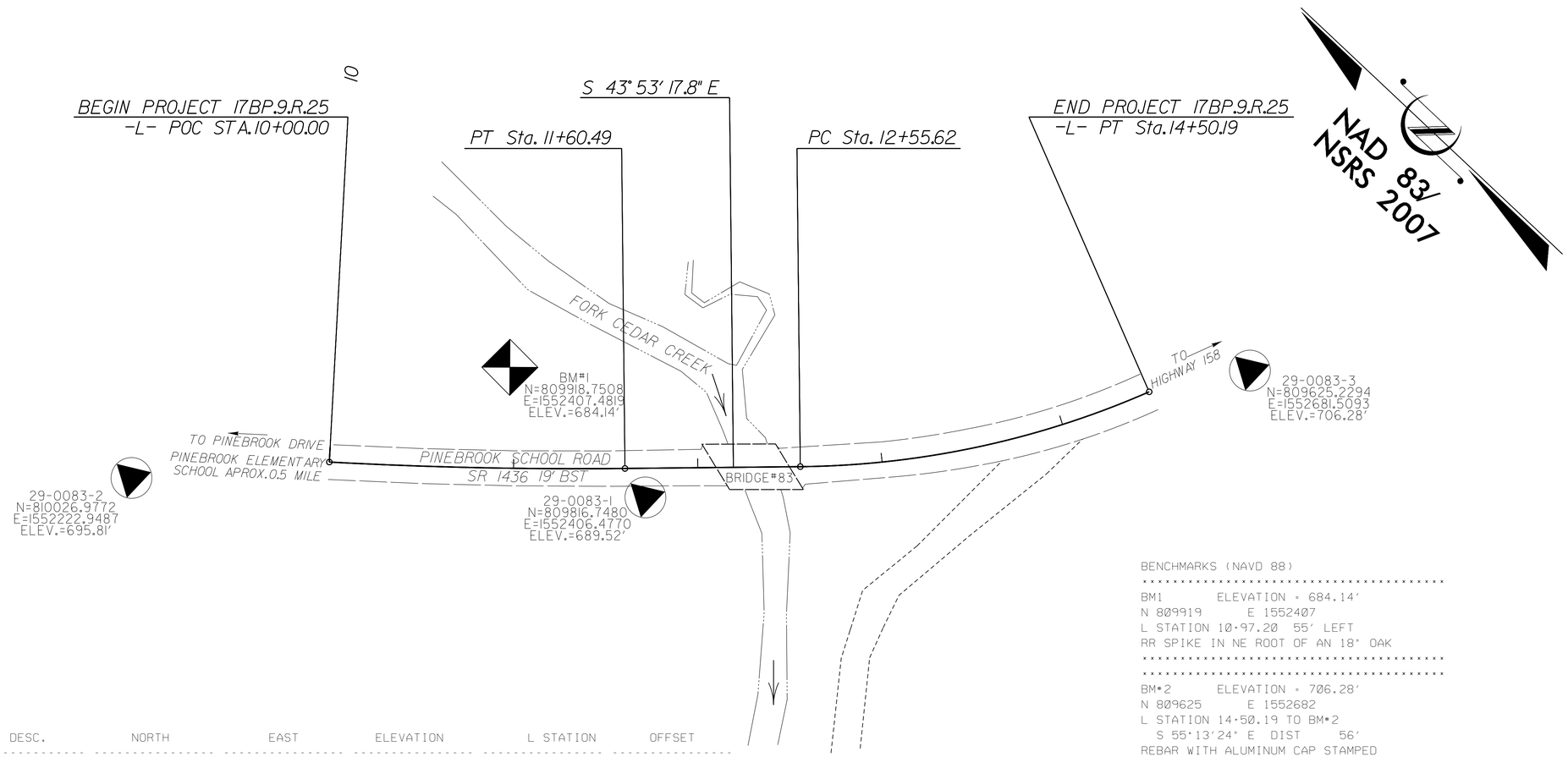

BENCHMARKS (NAVD 88)
****
BM1 ELEVATION = 684.14'
N 809919 E 1552407
L STATION 10+97.20 55' LEFT
RR SPIKE IN NE ROOT OF AN 18" OAK
****
****
BM#2 ELEVATION = 706.28'
N 809625 E 1552682
L STATION 14+50.19 TO BM#2
S 55°13'24" E DIST 56'
REBAR WITH ALUMINUM CAP STAMPED
"29-0083-3" (SET FLUSH WITH GROUND).
POINT LIES 4.5' SW OF EDGE OF
PINEBROOK SCHOOL ROAD
****

BL

POINT	DESC.	NORTH	EAST	ELEVATION	L STATION	OFFSET
3	29-0083-3	809625.2294	1552681.5093	706.28	OUTSIDE PROJECT LIMITS	
1	29-0083-1	809816.7480	1552406.4770	689.52	11+71.42	15.83 RT
2	29-0083-2	810026.9772	1552222.9487	695.81	OUTSIDE PROJECT LIMITS	

DATUM DESCRIPTION

THE LOCALIZED COORDINATE SYSTEM DEVELOPED FOR THIS PROJECT IS BASED ON THE STATE PLANE COORDINATES ESTABLISHED BY NCGS FOR MONUMENT "29-0083-01"
WITH NAD 83/NSRS 2007 STATE PLANE GRID COORDINATES OF
NORTHING: 809816.748(ft) EASTING: 1552406.477(ft)
ELEVATION: 689.52(ft)
THE AVERAGE COMBINED GRID FACTOR USED ON THIS PROJECT (GROUND TO GRID) IS: 0.9999222818
THE N.C. LAMBERT GRID BEARING AND LOCALIZED HORIZONTAL GROUND DISTANCE FROM "29-0083-1" TO -L- STATION 10+00.00 IS
N 36° 54' 27" W 172.58'
ALL LINEAR DIMENSIONS ARE LOCALIZED HORIZONTAL DISTANCES
VERTICAL DATUM USED IS NAVD 88

NOTES:

1. *THE CONTROL DATA FOR THIS PROJECT CAN BE FOUND ELECTRONICALLY BY SELECTING PROJECT CONTROL DATA AT:*
HTTPS://CONNECT.NCDOT.GOV/RESOURCES/LOCATION/

THE FILES TO BE FOUND ARE AS FOLLOWS:
290083_LS_CONTROL.TXT

SITE CALIBRATION INFORMATION HAS NOT BEEN PROVIDED FOR THIS PROJECT. IF FURTHER INFORMATION IS NEEDED, PLEASE CONTACT THE LOCATION AND SURVEYS UNIT.

INDICATES GEODETIC CONTROL MONUMENTS USED OR SET FOR HORIZONTAL PROJECT CONTROL BY THE NCDOT LOCATION AND SURVEYS UNIT.
PROJECT CONTROL ESTABLISHED USING GLOBAL POSITIONING SYSTEM.
NETWORK ESTABLISHED FROM EXISTING HARN MONUMENTATION
SEE GPS CALIBRATION SHEET FOR HORIZONTAL AND VERTICAL COORDINATE VALUES.

NOTE: DRAWING NOT TO SCALE

6/2/99
28-MAR-2016 10:23
R:\Roadway\Proj\290083_Rdy_psh_1C.dgn
$$$$USERNAME$$$$

DocuSign Envelope ID: 63B99F10-5B56-439E-BCE5-B5D5838AF970

6/2/99

PROJECT REFERENCE NO.	SHEET NO.
29-0083	1C-2
Location and Surveys	

SURVEY CONTROL SHEET 29-0083
FINAL

L

TYPE	STATION	NORTH	EAST
PC	10+00.00	809954.7480	1552302.8358
PT	11+60.49	809835.5876	1552410.3133
PC	12+55.62	809767.0281	1552476.2626
PT	14+50.19	809657.0910	1552635.6266

ROW MARKER CONCRETE OR GRANITE-E

ALIGN	STATION	OFFSET	NORTH	EAST
L	11+18.00	-30.00	809886.8913	1552403.0847
L	11+50.00	-45.00	809874.2284	1552435.6137
L	11+68.00	30.00	809809.3830	1552393.8936
L	12+00.00	40.00	809779.3883	1552408.8709
L	12+75.00	40.00	809724.4792	1552462.2703
L	13+00.00	-40.00	809766.7476	1552534.6168
L	13+07.00	29.10	809709.6764	1552495.0439
L	13+32.00	-30.65	809740.8263	1552551.8007

ROW MARKER PERMANENT EASEMENT-E

ALIGN	STATION	OFFSET	NORTH	EAST
L	10+94.00	-45.00	809914.4422	1552398.1058
L	10+94.00	-30.00	809904.3346	1552387.0227
L	12+00.00	50.00	809772.4557	1552401.6639
L	12+75.00	50.00	809717.2645	1552455.3459

DATUM DESCRIPTION

THE LOCALIZED COORDINATE SYSTEM DEVELOPED FOR THIS PROJECT IS BASED ON THE STATE PLANE COORDINATES ESTABLISHED BY NCGS FOR MONUMENT "29-0083-01"
WITH NAD 83/NSRS 2007 STATE PLANE GRID COORDINATES OF
NORTHING: 809816.748(ft) EASTING: 1552406.477(ft)
ELEVATION: 689.52(ft)
THE AVERAGE COMBINED GRID FACTOR USED ON THIS PROJECT (GROUND TO GRID) IS: 0.9999222818
THE N.C. LAMBERT GRID BEARING AND LOCALIZED HORIZONTAL GROUND DISTANCE FROM "29-0083-1" TO -L- STATION 10+00.00 IS
N 36° 54′ 27″ W 172.58′
ALL LINEAR DIMENSIONS ARE LOCALIZED HORIZONTAL DISTANCES
VERTICAL DATUM USED IS NAVD 88

NOTES:

1. *THE CONTROL DATA FOR THIS PROJECT CAN BE FOUND ELECTRONICALLY BY SELECTING PROJECT CONTROL DATA AT:*
   HTTPS://CONNECT.NCDOT.GOV/RESOURCES/LOCATION/

   THE FILES TO BE FOUND ARE AS FOLLOWS:
   29-0083_LS_CONTROL.TXT

   SITE CALIBRATION INFORMATION HAS NOT BEEN PROVIDED FOR THIS PROJECT. IF FURTHER INFORMATION IS NEEDED, PLEASE CONTACT THE LOCATION AND SURVEYS UNIT.

▲ *INDICATES GEODETIC CONTROL MONUMENTS USED OR SET FOR HORIZONTAL PROJECT CONTROL BY THE NCDOT LOCATION AND SURVEYS UNIT.*
PROJECT CONTROL ESTABLISHED USING GLOBAL POSITIONING SYSTEM.

NOTE: DRAWING NOT TO SCALE

29-MAR-2016 10:23
R:\Roadway\Proj\290083_ls_lc2.dgn
$$$$USERNAME$$$$

DocuSign Envelope ID: 63B99F10-5B56-439E-BCE5-B5D5838AF970

PROJECT REFERENCE NO.	SHEET NO.
17BP.9.R.25	2A-1
ROADWAY DESIGN ENGINEER	PAVEMENT DESIGN ENGINEER

NORTH CAROLINA PROFESSIONAL SEAL 024929 ENGINEER CLINTON J. HORGAN

DocuSigned by: Clinton J. Horgan 5/31/2016

DOCUMENT NOT CONSIDERED FINAL UNLESS ALL SIGNATURES COMPLETED

PAVEMENT SCHEDULE

C1	PROP. APPROX. 1.5″ ASPHALT CONCRETE SURFACE COURSE, TYPE S9.5B, AT AN AVERAGE RATE OF 168 LBS. PER SQ. YD.
C2	PROP. APPROX. 3″ ASPHALT CONCRETE SURFACE COURSE, TYPE S9.5B, AT AN AVERAGE RATE OF 168 LBS. PER SQ. YD. IN EACH OF TWO 1.5″ LAYERS.
C3	PROP. VAR. DEPTH ASPHALT CONCRETE SURFACE COURSE, TYPE S9.5B, AT AN AVERAGE RATE OF 112 LBS. PER SQ. YD. PER 1″ DEPTH, TO BE PLACED IN LAYERS NOT TO EXCEED 2″ IN DEPTH.
D1	PROP. APPROX. 2.5″ ASPHALT CONCRETE INTERMEDIATE COURSE, TYPE I19.0B, AT AN AVERAGE RATE OF 285 LBS. PER SQ. YD.
D2	PROP. VAR. DEPTH ASPHALT CONCRETE INTERMEDIATE COURSE,TYPE I19.0B AT AN AVERAGE RATE OF 114 LBS. PER SQ.YD. PER 1″ DEPTH, TO BE PLACED IN LAYERS NOT LESS THAN 2.5″ OR GREATER THAN 4″ DEPTH.
E1	PROP. APPROX. 4″ ASPHALT CONCRETE BASE COURSE, TYPE B25.0B, AT AN AVERAGE RATE OF 456 LBS. PER SQ. YD.
E2	PROP. VAR. DEPTH ASPHALT CONCRETE BASE COURSE, TYPE B25.0B, AT AN AVERAGE RATE OF 114 LBS. PER SQ. YD. PER 1″ DEPTH, TO BE PLACED IN LAYERS NOT LESS THAN 4″ IN DEPTH OR GREATER THAN 5.5″ IN DEPTH.
R1	SHOULDER BERM GUTTER
T	EARTH MATERIAL
U	EXISTING PAVEMENT
W	VARIABLE DEPTH ASPHALT PAVEMENT (SEE WEDGING DETAIL)
J	PROP. 6″ AGGREGATE BASE COURSE.

NOTE: PAVEMENT EDGE SLOPES ARE 1:1 UNLESS SHOWN OTHERWISE.

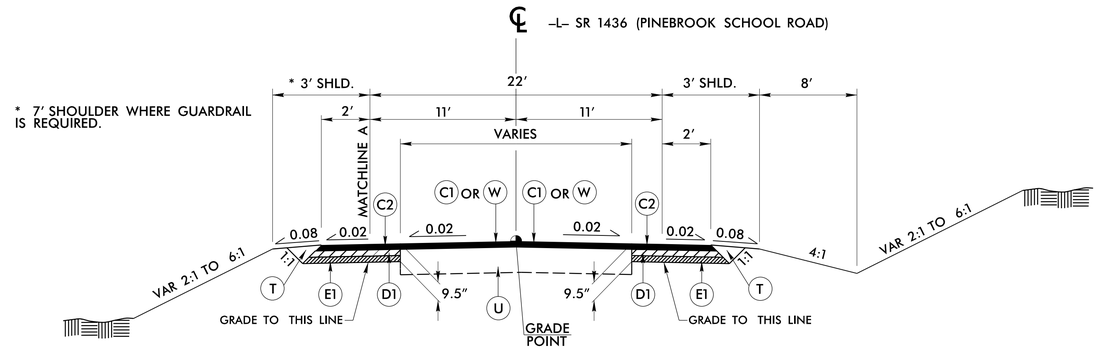

* 7′ SHOULDER WHERE GUARDRAIL IS REQUIRED.

TYPICAL SECTION NO. 1

USE TYPICAL SECTION NO. 1 AS FOLLOWS:
–L– STA. 10+25.00 TO STA. 11+25.00
–L– STA. 13+25.00 TO STA. 14+25.19

NOTE:
TRANSITION FROM EXISTING TO T.S. NO. 1
–L– STA. 10+00.00 TO –L– STA. 10+25.00
–L– STA. 14+25.19 TO –L– STA. 14+50.19

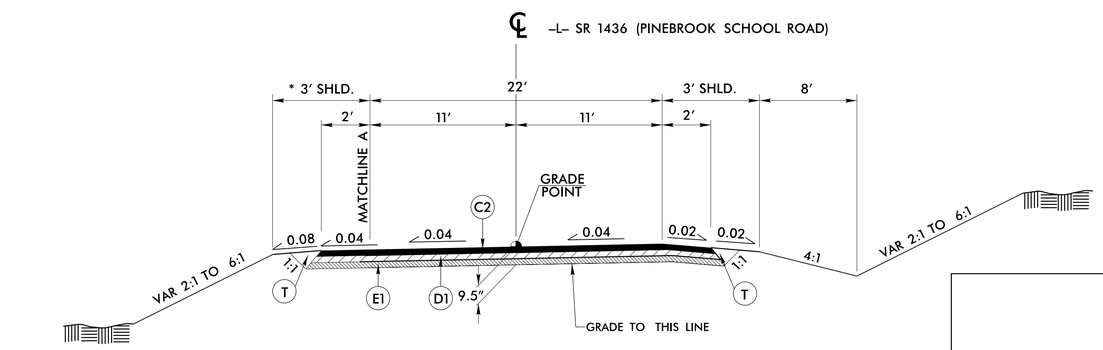

* 7′ SHOULDER WHERE GUARDRAIL IS REQUIRED.

TYPICAL SECTION NO. 2

USE TYPICAL SECTION NO. 2 AS FOLLOWS:
–L– STA. 11+25.00 TO STA. 11+95.70 (BEGIN BRIDGE)
–L– STA. 12+68.28 (END BRIDGE) TO STA. 13+25.00

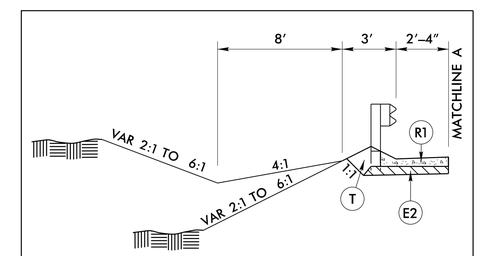

INSET 1

USE TYPICAL WITH SECTION NO. 1 & NO. 2
–L– STA. 10+61.00 TO STA. 11+76.00
–L– STA. 12+73.00 TO STA. 13+89.00

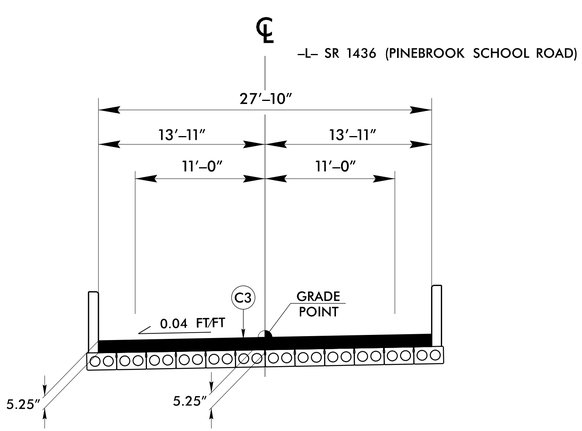

TYPICAL SECTION ON STRUCTURE

–L– STA. 11+95.70 TO STA. 12+68.28

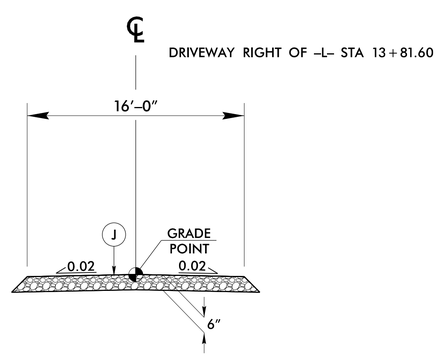

TYPICAL SECTION FOR DRIVEWAY

DRIVEWAY RIGHT OF –L– STA. 13+81.60

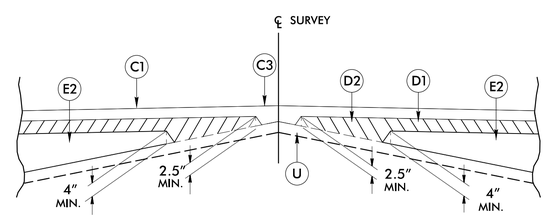

Detail Showing Method of Wedging

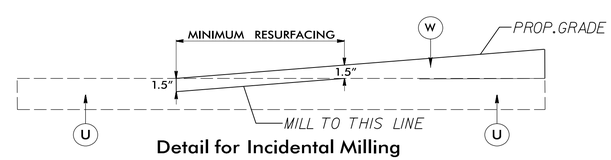

Detail for Incidental Milling

REVISIONS

6/2/99

23-MAR-2016 0:24
R:\Roadway\Proj\29083_Rdy_typ.dgn
$$$$USERNAME$$$$

$$$$$$SYSTIME$$$$$
$$$$$$$$$$$$$$$$DGN$$$$$$$$$$$$$$$$
$$$$USERNAME$$$$

DocuSign Envelope ID: 63899F10-5850-439E-BCE5-B5D5C58AF970

STATE OF NORTH CAROLINA
DEPT. OF TRANSPORTATION
DIVISION OF HIGHWAYS
RALEIGH, N.C.

ENGLISH DETAIL DRAWING FOR
STRUCTURE ANCHOR UNITS
GUARDRAIL ANCHOR UNIT, TYPE III FOR ATTACHMENT TO
RAIL ON BRIDGE - SUB REGIONAL TIER

SHEET 2 OF 7
862d03

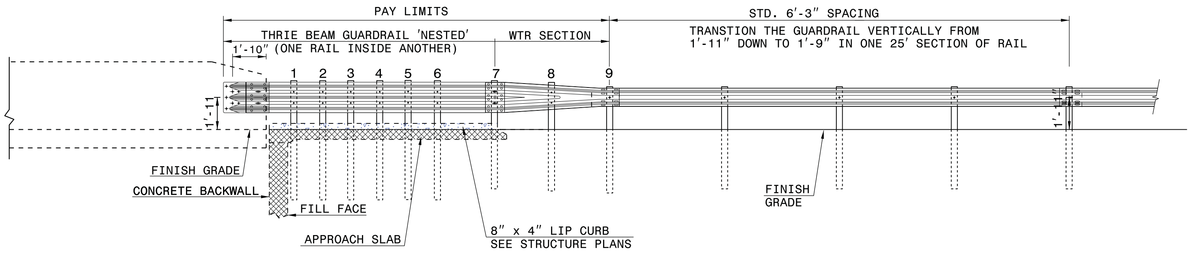

ELEVATION

NOTE:
- **POST NOT REQUIRED FOR SKEW ANGLES GREATER THAN 150° OR LESS THAN 30° UNLESS OTHERWISE DIRECTED BY THE ENGINEER.
- *THE DISTANCE FROM END OF BRIDGE RAIL TO CENTER LINE OF THE FIRST POST SHOULD BE 11½" IF CONCRETE BACKWALL IS NOT PRESENT.
- -SHOULDER BERM GUTTER MUST BE INSTALLED TO THE LIMITS 8" x 4" LIP CURB IS SHOWN IF ANCHOR UNIT IS NOT ADJACENT TO AN APPROACH SLAB.
- -MEASURE GUARDRAIL HEIGHT FROM THE TOP OF ADJACENT SURFACE (SHOULDER, BERM, OR GUTTER).
- -LAP JOINTS IN THE DIRECTION OF TRAFFIC FLOW.
- -SEE SHEET 5 FOR POST SECTIONS 1 THRU 9.

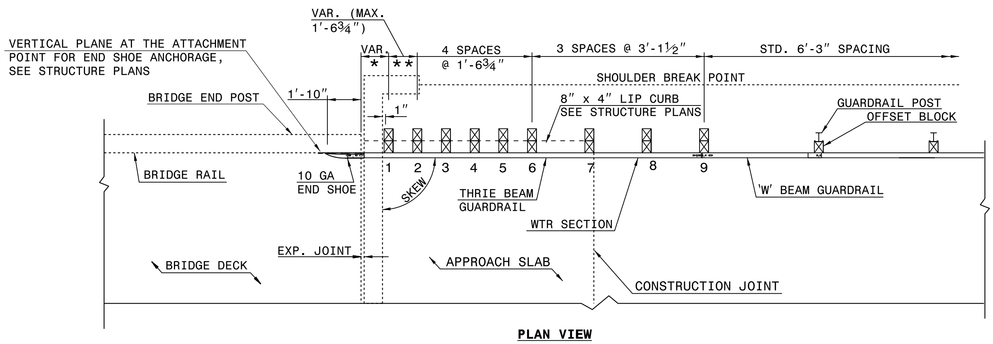

PLAN VIEW

GUARDRAIL ANCHOR UNIT, TYPE III FOR ATTACHMENT TO RAIL ON BRIDGE - SUB REGIONAL TIER

STATE OF NORTH CAROLINA
DEPT. OF TRANSPORTATION
DIVISION OF HIGHWAYS
RALEIGH, N.C.

ENGLISH DETAIL DRAWING FOR
STRUCTURE ANCHOR UNITS
GUARDRAIL ANCHOR UNIT, TYPE III FOR ATTACHMENT TO
RAIL ON BRIDGE - SUB REGIONAL TIER

SHEET 2 OF 7
862d03

STATE OF NORTH CAROLINA
DEPT. OF TRANSPORTATION
DIVISION OF HIGHWAYS
RALEIGH, N.C.

ENGLISH DETAIL DRAWING FOR
STRUCTURE ANCHOR UNITS
GUARDRAIL ANCHOR UNIT, TYPE III

SHEET 3 OF 7
862d03

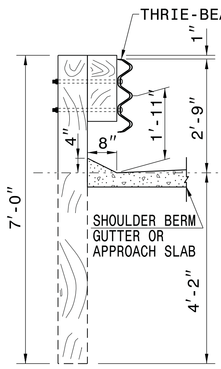

SECTION OF THRIE BEAM POSTS 1 THRU 6

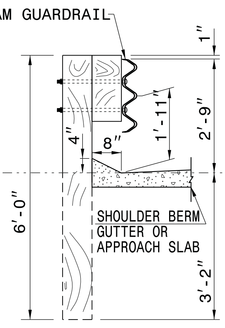

SECTION OF THRIE BEAM POST 7

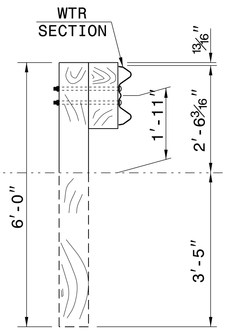

SECTION OF WTR BEAM POST 8

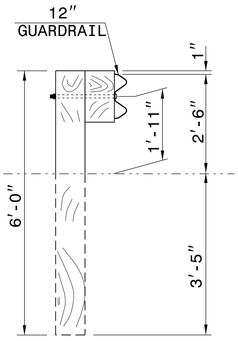

SECTION OF 'W' BEAM POST 9

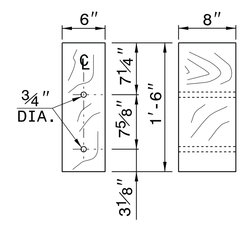

THRIE BEAM OFFSET BLOCK

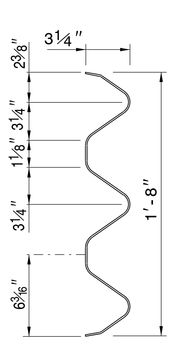

THRIE-BEAM SECTION

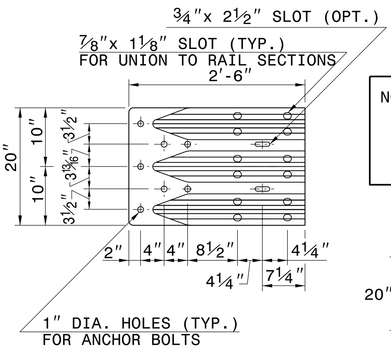

END SHOE

NOTE: THE MID POST AND OFFSET BLOCK OF THE WTR SECTION WILL REQUIRE SPECIAL BOLT HOLE DRILLING IN THE THRIE BEAM OFFSET BLOCK AND LINE POST.

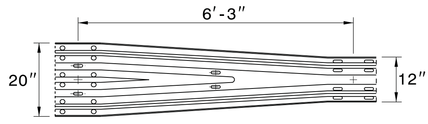

WTR SECTION
ELEVATION VIEW

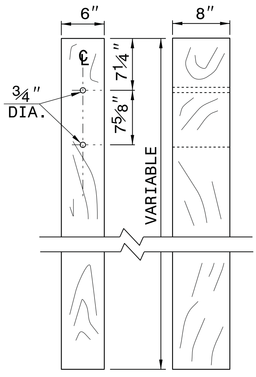

THRIE BEAM LINE POST

GUARDRAIL ANCHOR UNIT, TYPE III FOR ATTACHMENT TO RAIL ON BRIDGE - SUB REGIONAL TIER

CONTRACT STANDARDS AND DEVELOPMENT UNIT
Office 919-707-6950 FAX 919-250-4119

SEE TITLE BLOCK

ORIGINAL BY: J. HOWERTON DATE: 06-22-12
MODIFIED BY: DATE:
CHECKED BY: DATE:
FILE SPEC.: DATE:

PROJECT REFERENCE NO.: 17BP.9.R.25
SHEET NO.: 2C-1

DocuSign Envelope ID: 63B99F10-5B56-439E-BCE5-B5D5838AF970

12/06/07

COMPUTED BY: IWB	DATE: 10-09-14
CHECKED BY: CJM	DATE: 10-09-14

STATE OF NORTH CAROLINA
DIVISION OF HIGHWAYS

PROJECT REFERENCE NO.	SHEET NO.
17BP.9.R.25	3B-1

SUMMARY OF EARTHWORK

STATION	STATION	UNCL. EXCAV.	EMBANK. +20%	BORROW	WASTE
-L- STA 10+00.00	-L- STA 11+95.88	0	152	152	0
-L- STA 12+68.29	-L- STA 14+50.19	4	124	120	0
PROJECT TOTALS:		4	276	272	0
LOSS DUE TO C&G (5%)		1			
RELACE TOPSOIL ON BORROW PIT (5%)				14	
GRAND TOTALS:		5	276	286	0
SAY:		10		290	0

NOTE: Approximate quantities only. Unclassified Excavation, Borrow Excavation, Shoulder Borrow, Fine Grading, and Clearing and Grubbing, and Removal of Existing Pavement will be paid for at the contract lump sum price for "Grading".

PAVEMENT REMOVAL SUMMARY

SURVEY LINE	STATION	STATION	AREA (SY)
-L- (CL)	11+25	12+10	184
-L- (CL)	12+50	13+25	167
TOTAL:			351
SAY:			360

SHOULDER BERM GUTTER SUMMARY

SURVEY LINE	STATION	STATION	LENGTH
-L- (LT)	10+61	11+76	114'
-L- (LT)	12+73	13+89	113'
TOTAL:			227'
SAY:			230'

NOTE: Invert Elevations are for Bid Purposes only and shall not be used for project construction stakeout. See "Standard Specifications For Roads and Structures, Section 300-5".

SUB-REGIONAL & REGIONAL
LIST OF PIPES, ENDWALLS, ETC. (FOR PIPES 48" & UNDER)

| STATION / SIZE / THICKNESS OR GAUGE | LOCATION (LT,RT, OR CL) | STRUCTURE NO. FROM | STRUCTURE NO. TO | TOP ELEVATION | INVERT ELEVATION | INVERT ELEVATION | SLOPE CRITICAL | DRAINAGE PIPE (RCP, CSP, CAAP, HDPE, or PVC) 12" | 15" | 18" | 24" | 30" | 36" | 42" | 48" | DO NOT USE RCP | DO NOT USE CSP | DO NOT USE CAAP | DO NOT USE HDPE | C.S. PIPE 12" .064 | 15" .064 | 18" .064 | 24" .064 | 36" .079 | 42" .109 | 48" .109 | R.C. PIPE (CLASS III) 15" | 18" | 24" | 30" | 36" | 42" | 48" | R.C. PIPE (CLASS IV) 12" | 15" | 18" | 24" | 30" | 36" | 42" | 48" | *** R.C. PIPE (CLASS V) | *** R.C. PIPE CULVERTS, CONTRACTOR DESIGN PIPE | *** R.C. PIPE CULVERTS, CONTRACTOR DESIGN PIPE | 15" SIDE DRAIN PIPE | 18" SIDE DRAIN PIPE | ENDWALLS STD. 838.01, STD. 838.11 OR STD. 838.80 (UNLESS NOTED OTHERWISE) CU. YDS. R.C.P. | C.S.P. | QUANTITIES FOR DRAINAGE STRUCTURES PER EACH (0' THRU 5.0') | * TOTAL L.F. FOR PAY QUANTITY SHALL BE COL. 'A' + (1.3 X COL. 'B') LIN. *FT. A: 5.0' THRU 10.0' | B: 10.0' AND ABOVE | C.B. STD. 840.01 OR STD. 840.02 | FRAME, GRATES AND HOOD STANDARD 840.03 TYPE OF GRATE E | F | G | CONCRETE TRANSITIONAL SECTION CATCH BASIN | DROP INLET | G.D.I. FRAME WITH TWO GRATES STD. 840.20 | G.D.I. TYPE "B" STD. 840.18 OR 840.27 | G.D.I. (N.S.) FRAME WITH GRATE STD. 840.29 | G.D.I. (N.S.) FRAME WITH TWO GRATES STD. 840.24 | J.B. STD. 840.31 OR 840.32 | T.B.D.I. FRAME WITH TWO GRATES STD. 840.35 | CORR. STEEL ELBOWS NO. & SIZE | CONC. COLLARS CL. "B" C.Y. STD 840.72 | CONC. & BRICK PIPE PLUG, C.Y. STD. 840.71 | PIPE REMOVAL LIN.FT. | REMARKS |
|---|---|---|---|---|---

DocuSign Envelope ID: 63B99F10-5B56-439E-BCE5-B5D5838AF970

8/17/99

PROJECT REFERENCE NO.	SHEET NO.
17BP.9.R.25	4
R/W SHEET NO.	

ROADWAY DESIGN ENGINEER
NORTH CAROLINA PROFESSIONAL SEAL 024929 ENGINEER CLINTON J. MORGAN
DocuSigned by: Clinton J. Morgan 3/31/2016

HYDRAULICS ENGINEER
NORTH CAROLINA PROFESSIONAL SEAL 041957 ENGINEER DEAN ROBERT GOODLSON
DocuSigned by: 3/31/2016

DOCUMENT NOT CONSIDERED FINAL UNLESS ALL SIGNATURES COMPLETED

-L-	
PI Sta 10+80.28	PI Sta 13+54.41
△ = 3° 40' 42.0" (LT)	△ = 23° 01' 35.7" (LT)
D = 2° 17' 31.1"	D = 11° 50' 04.5"
L = 160.49'	L = 194.57'
T = 80.28'	T = 98.79'
R = 2,500.00'	R = 485.00'
SE = 0.04	SE = 0.04
DS = 35 MPH	DS = 35 MPH

NAD 83/ NSRS 2007

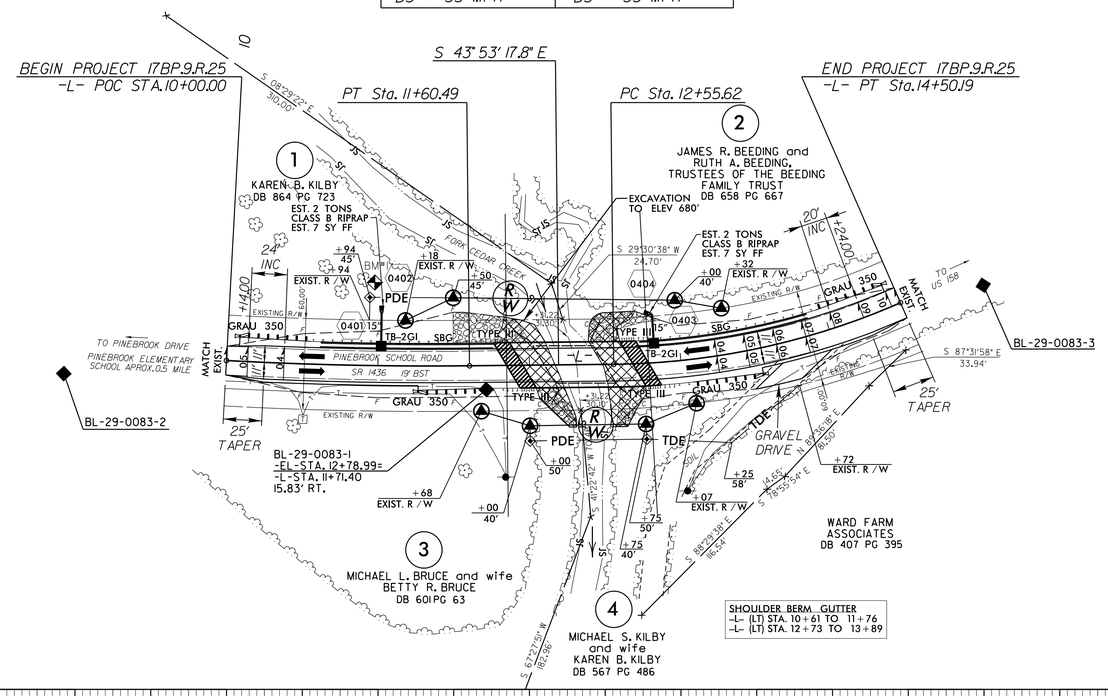

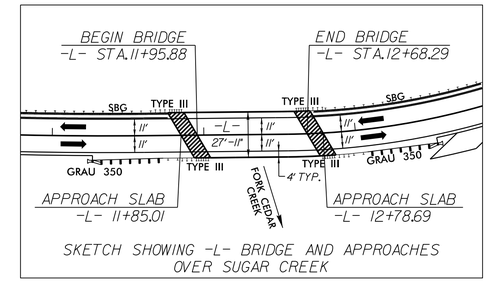

SKETCH SHOWING -L- BRIDGE AND APPROACHES OVER SUGAR CREEK

UNCLASSIFIED EXCAVATION

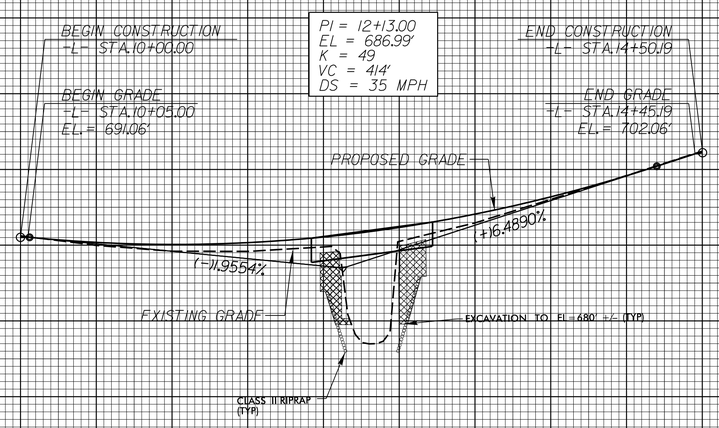

BM #1 (NAVD 88)
RR SPIKE IN NE ROOT OF AN 18" OAK
-L- STA. 10+96.68 (54.64' LT)
N 809919 E 1552407
EL = 684.14'

STRUCTURE HYDRAULIC DATA

DESIGN DISCHARGE	=	1,700	CFS
DESIGN FREQUENCY	=	25	YRS
DESIGN HW ELEVATION	=	687.2	FT
BASE DISCHARGE	=	2,457	CFS
BASE FREQUENCY	=	100	YRS
BASE HW ELEVATION	=	688.72	FT
OVERTOPPING DISCHARGE	=	3,300	CFS
OVERTOPPING FREQUENCY	=	500	YRS
OVERTOPPING ELEVATION	=	690.5	FT

FOR STRUCTURE PLAN, SEE SHEET S-1 THRU S-13

29-MAR-2016 16:24
R:\Roadway\Proj\2900083_Rdy_psh04.dgn
$$$$USERNAME$$$$

DocuSign Envelope ID: 63B99F10-5B56-439E-BCE5-B5D5838AF970

PROJ. REFERENCE NO.	SHEET NO.
17BP.9.R.25	TMP-1

TIP PROJECT: 17BP.9.R.25

STATE OF NORTH CAROLINA
DIVISION OF HIGHWAYS

TRANSPORTATION MANAGEMENT PLAN

DAVIE COUNTY

BRIDGE NO. 83 OVER SUGAR CREEK ON SR 1436 (PINEBROOK SCHOOL ROAD)

ROADWAY STANDARD DRAWINGS

THE FOLLOWING ROADWAY STANDARDS AS SHOWN IN "ROADWAY STANDARD DRAWINGS" - PROJECT SERVICES UNIT - N.C. DEPARTMENT OF TRANSPORTATION - RALEIGH, N.C., DATED JANUARY 2012 ARE APPLICABLE TO THIS PROJECT AND BY REFERENCE HEREBY ARE CONSIDERED A PART OF THESE PLANS:

STD. NO.	TITLE
1101.01	WORK ZONE ADVANCE WARNING SIGNS
1101.03	TEMPORARY ROAD CLOSURES
1101.04	TEMPORARY SHOULDER CLOSURES
1101.11	TRAFFIC CONTROL DESIGN TABLES
1110.01	STATIONARY WORK ZONE SIGNS
1110.02	PORTABLE WORK ZONE SIGNS
1130.01	DRUM
1135.01	CONES
1145.01	BARRICADES
1205.01	PAVEMENT MARKINGS - LINE TYPES AND OFFSETS
1205.02	PAVEMENT MARKINGS - TWO LANE AND MULTILANE ROADWAYS
1205.12	PAVEMENT MARKINGS - BRIDGES
1261.01	GUARDRAIL AND BARRIER DELINEATORS - INSTALLATION SPACING
1261.02	GUARDRAIL AND BARRIER DELINEATORS - TYPES AND MOUNTING
1262.01	GUARDRAIL END DELINEATION

INDEX OF SHEETS

SHEET NO.	TITLE
TMP-1	ROADWAY STANDARD DRAWINGS, INDEX OF SHEETS, LEGEND, GENERAL NOTES & PHASING.
TMP-2	DETOUR SIGNING

LEGEND

TRAFFIC CONTROL DEVICES

BARRICADE (TYPE III)

TEMPORARY SIGNING

STATIONARY SIGN

GENERAL NOTES

CHANGES MAY BE REQUIRED WHEN PHYSICAL DIMENSIONS IN THE DETAIL DRAWINGS, STANDARD DETAILS AND ROADWAY DETAILS ARE NOT ATTAINABLE TO MEET FIELD CONDITIONS OR RESULT IN DUPLICATE OR UNDESIRED OVERLAPPING OF DEVICES. MODIFICATION MAY INCLUDE: MOVING, SUPPLEMENTING, COVERING, OR REMOVAL OF DEVICES AS DIRECTED BY THE ENGINEER.

THE FOLLOWING GENERAL NOTES APPLY AT ALL TIMES FOR THE DURATION OF THE CONSTRUCTION PROJECT EXCEPT WHEN OTHERWISE NOTED IN THE PLAN OR DIRECTED BY THE ENGINEER.

LANE AND SHOULDER CLOSURE REQUIREMENTS

A) REMOVE LANE CLOSURE DEVICES FROM THE LANE WHEN WORK IS NOT BEING PERFORMED BEHIND THE LANE CLOSURE OR WHEN A LANE CLOSURE IS NO LONGER NEEDED OR AS DIRECTED BY THE ENIGNEER.

B) WHEN PERSONNEL AND/OR EQUIPMENT ARE WORKING WITHIN 15 FT OF AN OPEN TRAVEL LANE, CLOSE THE NEAREST OPEN SHOULDER USING ROADWAY STANDARD DRAWING NO. 1101.04 UNLESS THE WORK AREA IS PROTECTED BY BARRIER OR GUARDRAIL OR A LANE CLOSURE IS INSTALLED.

TRAFFIC PATTERN ALTERATIONS

C) NOTIFY THE ENGINEER TWENTY ONE (21) CALENDAR DAYS PRIOR TO ANY TRAFFIC PATTERN ALTERATION.

SIGNING

D) INSTALL ADVANCED WORK ZONE WARNING SIGNS WHEN WORK IS WITHIN 40 FT FROM THE EDGE OF TRAVEL LANE AND NO MORE THAN THREE (3) DAYS PRIOR TO THE BEGINNING OF CONSTRUCTION.

E) PROVIDE SIGNING AND DEVICES REQUIRED TO CLOSE THE ROAD ACCORDING TO THE ROADWAY STANDARD DRAWINGS AND TRAFFIC CONTROL PLANS.

PROVIDE SIGNING REQUIRED FOR THE OFF-SITE DETOUR ROUTE AS SHOWN IN THE TRAFFIC CONTROL PLANS.

F) COVER OR REMOVE ALL SIGNS AND DEVICES REQUIRED TO CLOSE THE ROAD WHEN ROAD CLOSURE IS NOT IN OPERATION.

COVER OR REMOVE ALL SIGNS AND DEVICES REQUIRED FOR THE OFF-SITE DETOUR WHEN THE DETOUR IS NOT IN OPERATION.

G) ENSURE ALL NECESSARY SIGNING IS IN PLACE PRIOR TO ALTERING ANY TRAFFIC PATTERN.

TRAFFIC CONTROL DEVICES

H) PLACE TYPE III BARRICADES, WITH "ROAD CLOSED" SIGN R11-2 ATTACHED, OF SUFFICIENT LENGTH TO CLOSE ENTIRE ROAD.

PAVEMENT MARKINGS AND MARKERS

I) INSTALL PAVEMENT MARKINGS ON THE FINAL SURFACE AS FOLLOWS:

ROAD NAME	MARKING	MARKERS
SR 1436	THERMOPLASTIC	NONE

J) TIE PROPOSED PAVEMENT MARKING LINES TO EXISTING PAVEMENT MARKING LINES.

K) REMOVE/REPLACE ANY CONFLICTING/DAMAGED PAVEMENT MARKINGS.

PHASING

STEP 1: INSTALL ALL DETOUR SIGNING KEEPING SIGNS COVERED (SEE SHEET TMP-2).

STEP 2: USING ROADWAY STANDARD DRAWING 1101.03, SHEET 1 OF 9, CLOSE SR 1436 TO TRAFFIC, UNCOVER ALL DETOUR SIGNING AND SHIFT TRAFFIC TO DETOUR (SEE SHEET TMP-2).

STEP 3: DISMANTLE AND REMOVE EXISTING BRIDGE NO. 83.

STEP 4: COMPLETE CONSTRUCTION OF PROPOSED STRUCTURE, APPROACH ROADWAY TIE-INS AND ASSOCIATED ITEMS.

STEP 5: USING ROADWAY STANDARD DRAWINGS, 1205 SERIES, PLACE FINAL PAVEMENT MARKINGS ON SR 1436 IN TWO-WAY, TWO-LANE PATTERN WITH DOUBLE YELLOW CENTERLINE. INSTALL DELINEATORS PER ROADWAY STANDARD DRAWINGS 1261 AND 1262.

STEP 6: REMOVE ALL DETOUR SIGNING, ALL TRAFFIC CONTROL DEVICES AND OPEN SR 1436 TO TRAFFIC.

ATKINS
1616 EAST MILLBROOK ROAD, SUITE 310
RALEIGH, NORTH CAROLINA 27609
(919) 876-6888 NCBEES #F-0326

APPROVED DocuSigned by: J. Todd Brooks 9E1F8D0C0C4D4D... DATE: 3/30/2016

SEAL

NORTH CAROLINA PROFESSIONAL SEAL 017586 ENGINEER J. TODD BROOKS

DIVISION OF HIGHWAYS STATE OF NORTH CAROLINA DEPARTMENT OF TRANSPORTATION WORK ZONE TRAFFIC CONTROL

ROADWAY STANDARD DRAWINGS, INDEX OF SHEETS, LEGEND, GENERAL NOTES AND PHASING

3/28/2016
R:\290083\Traffic\TrafficControl\TCP\290083_TC_TMP_TS.dgn
User:BERD5650

DocuSign Envelope ID: 63B99F10-5B56-439E-BCE5-B5D5838AF970

PROJ. REFERENCE NO.	SHEET NO.
17BP.9.R.25	TMP-2

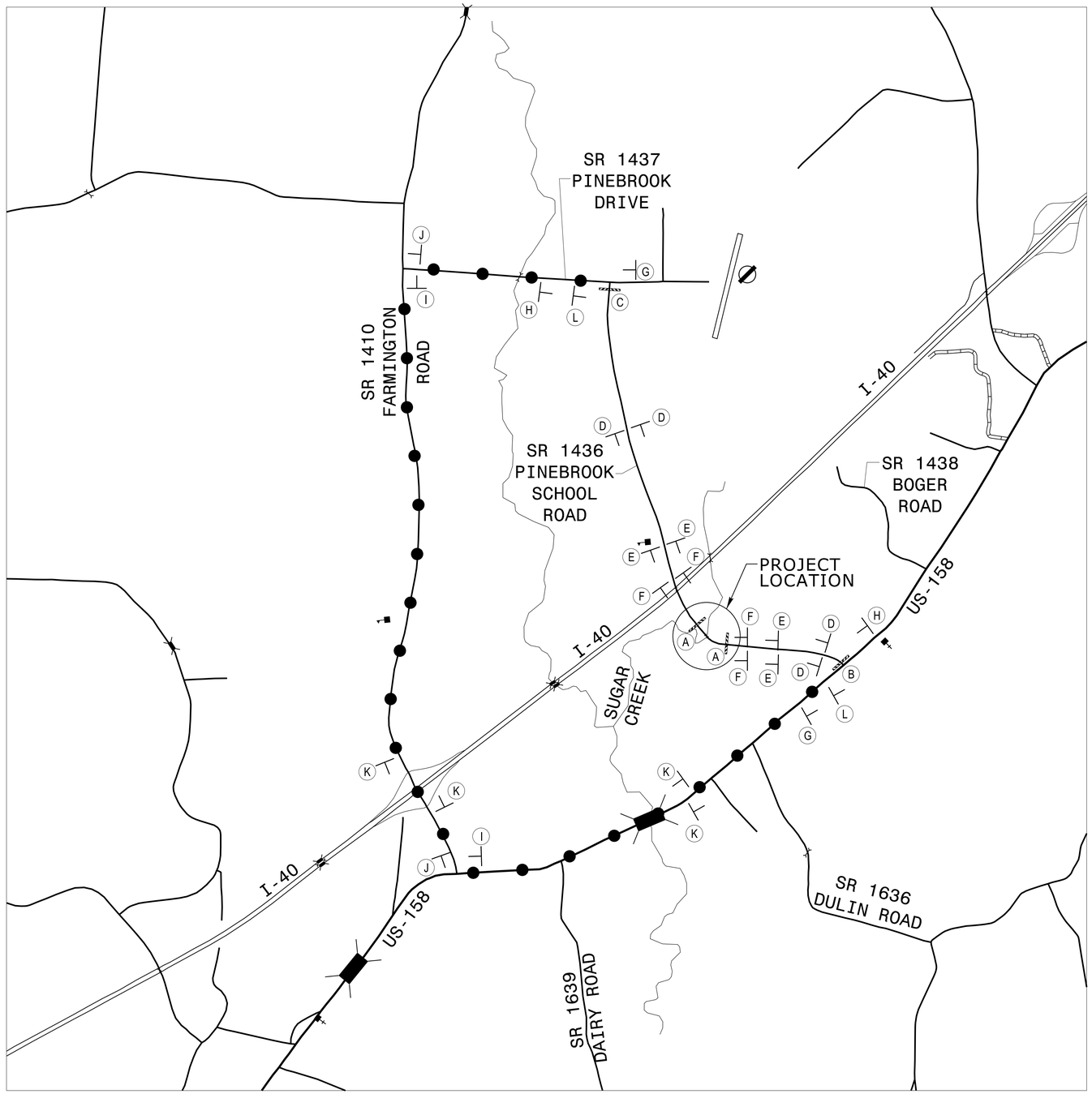

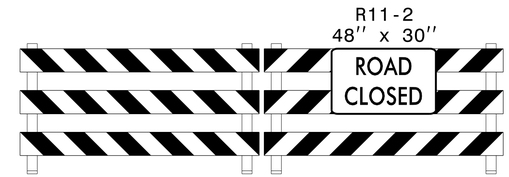

TYPE III BARRICADE(S)

A

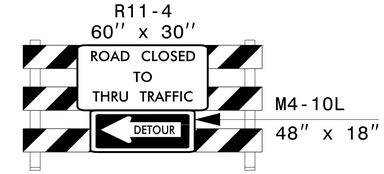

TYPE III BARRICADE

B

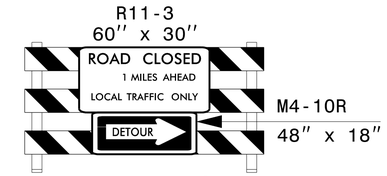

TYPE III BARRICADE

C

D

E

F

G

H

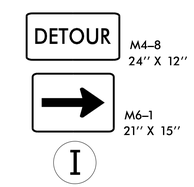

I

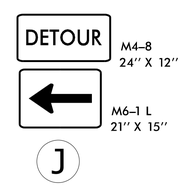

J

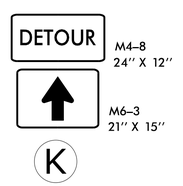

K

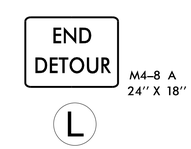

L

PROPOSED DETOUR

DETOUR ROUTE ●●●●

DETOUR LENGTH 5.5 MILES

ATKINS 1616 EAST MILLBROOK ROAD, SUITE 310
RALEIGH, NORTH CAROLINA 27609
(919) 876-6888 NCBEES #F-0326

APPROVED DocuSigned by: DESDFD00A2A240C... DATE: 3/30/2016

SEAL

NORTH CAROLINA PROFESSIONAL SEAL 017586 ENGINEER J. TODD BROOKS

DIVISION OF HIGHWAYS · STATE OF NORTH CAROLINA · DEPARTMENT OF TRANSPORTATION · WORK ZONE TRAFFIC CONTROL

DETOUR SIGNING

3/28/2016
R:\290083\Traffic\TrafficControl\TCP\290083_TC_TMP_Detour.dgn
User:BERD5650

DocuSign Envelope ID: 63B99F10-5B56-439E-BCE5-B5D5838AF970

09/08/99

TIP PROJECT: 17BP.9.R.25

STATE	STATE PROJECT REFERENCE NO.	SHEET NO.	TOTAL SHEETS
N.C.	17BP.9.R.25	EC-1	

W.B.S. NO.	F.A. PROJ. NO.	DESCRIPTION

STATE OF NORTH CAROLINA
DIVISION OF HIGHWAYS

DAVIE COUNTY

PLAN FOR PROPOSED HIGHWAY EROSION CONTROL

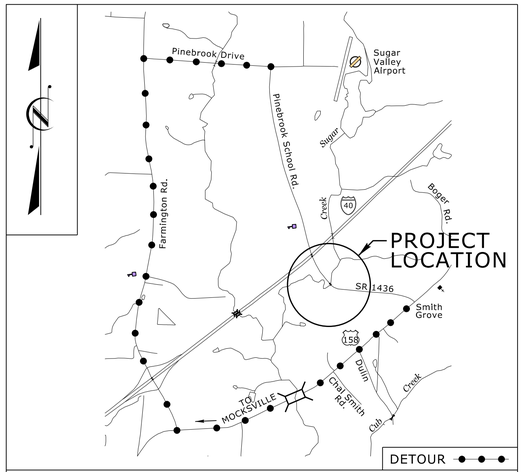

VICINITY MAP

LOCATION: BRIDGE NO. 83 OVER SUGAR CREEK ON SR 1436 (PINEBROOK SCHOOL RD)

TYPE OF WORK: WIDENING, GRADING, PAVING, DRAINAGE, AND STRUCTURE

NAD 83 / NSRS 2007

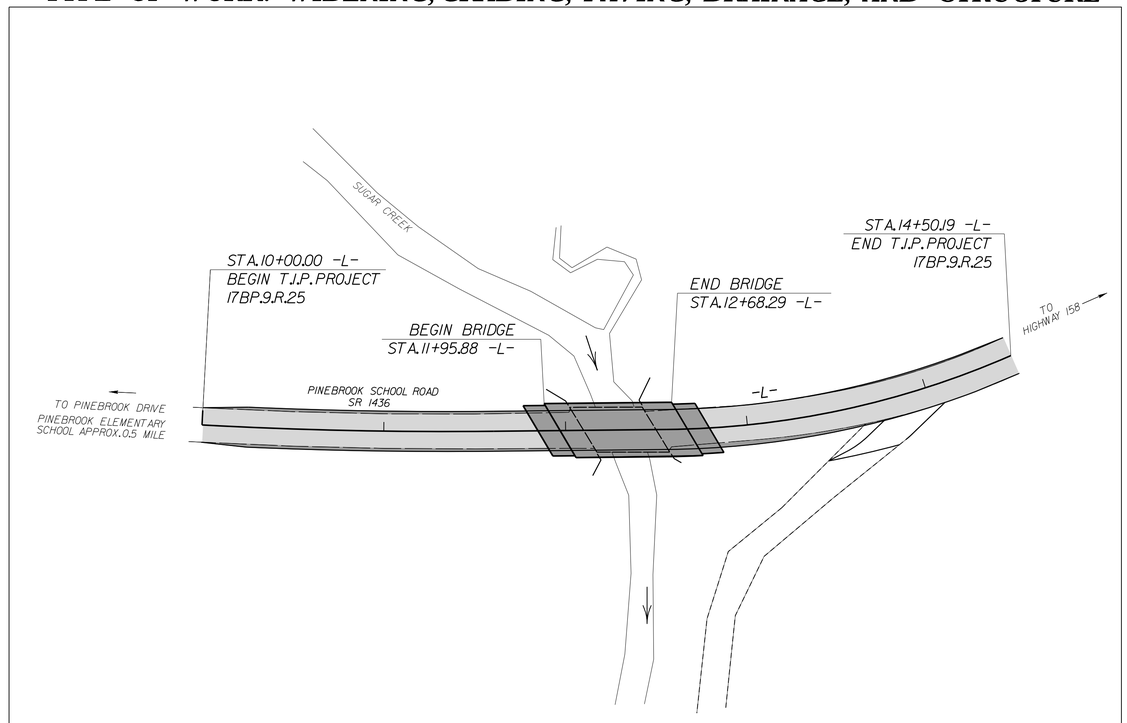

EROSION AND SEDIMENT CONTROL MEASURES

Std. #	Description	Symbol
1630.03	Temporary Silt Ditch	TSD
1630.05	Temporary Diversion	TD
1605.01	Temporary Silt Fence	
1606.01	Special Sediment Control Fence	
1622.01	Temporary Berms and Slope Drains	
1630.02	Silt Basin Type B	
1633.01	Temporary Rock Silt Check Type-A	
	Temporary Rock Silt Check Type-A with Matting and Polyacrylamide (PAM)	
1633.02	Temporary Rock Silt Check Type-B	
	Wattle / Coir Fiber Wattle	EW CFW
	Wattle / Coir Fiber Wattle with Polyacrylamide (PAM)	
1634.01	Temporary Rock Sediment Dam Type-A	
1634.02	Temporary Rock Sediment Dam Type-B	
1635.01	Rock Pipe Inlet Sediment Trap Type-A	
1635.02	Rock Pipe Inlet Sediment Trap Type-B	
1630.04	Stilling Basin	
1630.06	Special Stilling Basin	
	Rock Inlet Sediment Trap:	
1632.01	Type A	A
1632.02	Type B	B
1632.03	Type C	C
	Skimmer Basin	
	Tiered Skimmer Basin	
	Infiltration Basin	

THIS PROJECT CONTAINS EROSION CONTROL PLANS FOR CLEARING AND GRUBBING PHASE OF CONSTRUCTION.

ENVIRONMENTALLY SENSITIVE AREA(S) EXIST ON THIS PROJECT

Refer To E. C. Special Provisions for Special Considerations.

ROADSIDE ENVIRONMENTAL UNIT
DEPARTMENT OF TRANSPORTATION
DIVISION OF HIGHWAYS
RALEIGH, N.C.

2012 STANDARD SPECIFICATIONS

NOTES: ANY DEVIATION FROM OPTIONS GIVEN WILL REQUIRE PRIOR APPROVAL BY ENGINEER.

ADDITIONAL EROSION CONTROL DEVICES MAY NEED TO BE INSTALLED AS DIRECTED BY THE ENGINEER.

CLEARING ON THIS PROJECT SHALL BE PERFORMED TO THE LIMITS ESTABLISHED BY METHOD III

GRAPHIC SCALES

50 25 0 50 100
PLANS

50 25 0 50 100
PROFILE (HORIZONTAL)

10 5 0 10 20
PROFILE (VERTICAL)

ROADSIDE ENVIRONMENTAL UNIT
DIVISION OF HIGHWAYS
STATE OF NORTH CAROLINA

STATE OF NORTH CAROLINA DEPARTMENT OF TRANSPORTATION

P.E.
ENGINEER APPROVAL

THESE EROSION AND SEDIMENT CONTROL PLANS COMPLY WITH THE REGULATIONS SET FORTH BY THE NCG-010000 GENERAL CONSTRUCTION PERMIT EFFECTIVE AUGUST 3, 2011 ISSUED BY THE NORTH CAROLINA DEPARTMENT OF ENVIRONMENT AND NATURAL RESOURCES DIVISION OF WATER QUALITY.

PROJECT LENGTH

LENGTH ROADWAY T.I.P. PROJECT 17BP.9.R.25	=	0.071 MILES
LENGTH STRUCTURES T.I.P. PROJECT 17BP.9.R.25	=	0.014 MILES
TOTAL LENGTH T.I.P. PROJECT 17BP.9.R.25	=	0.085 MILES

Prepared in the Office of:
ATKINS
5200 77 CENTER DRIVE, SUITE 500
CHARLOTTE, NORTH CAROLINA 28217
(704) 522-7275

2012 STANDARD SPECIFICATIONS

RIGHT OF WAY DATE:

LETTING DATE:
APRIL 27, 2016

DEAN GOODISON, PE
IIIA CERT. #3864
PROJECT ENGINEER

NADIA ABOULHOSN, PE
IIIA CERT. #3863
PROJECT DESIGN ENGINEER

MATTHEW JONES, P.E.
NCDOT CONTACT

Roadway Standard Drawings

The following roadway English standards as appear in "Roadway Standard Drawings"– Roadway Design Unit – N. C. Department of Transportation – Raleigh, N. C., dated January 2012 and the latest revison thereto are applicable to this project and by reference hereby are considered a part of these plans.

1604.01	Railroad Erosion Control Detail	1632.01	Rock Inlet Sediment Trap Type A
1605.01	Temporary Silt Fence	1632.02	Rock Inlet Sediment Trap Type B
1606.01	Special Sediment Control Fence	1632.03	Rock Inlet Sediment Trap Type C
1607.01	Gravel Construction Entrance	1633.01	Temporary Rock Silt Check Type A
1622.01	Temporary Berms and Slope Drains	1633.02	Temporary Rock Silt Check Type B
1630.01	Riser Basin	1634.01	Temporary Rock Sediment Dam Type A
1630.02	Silt Basin Type B	1634.02	Temporary Rock Sediment Dam Type B
1630.03	Temporary Silt Ditch	1635.01	Rock Pipe Inlet Sediment Trap Type A
1630.04	Stilling Basin	1635.02	Rock Pipe Inlet Sediment Trap Type B
1630.05	Temporary Diversion	1640.01	Coir Fiber Baffle
1630.06	Special Stilling Basin	1645.01	Temporary Stream Crossing
1631.01	Matting Installation		

28-MAR-2016 17:10
R:\290083\Hydraulics\CADD\PSH\290083_Rdy_EC_tsh.dgn
$$$$USERNAME$$$$

DocuSign Envelope ID: 63B99F10-5B56-439E-BCE5-B5D5838AF970

5/14/99

PROJECT REFERENCE NO.	SHEET NO.
17BP.9.R.25	EC-2A
R/W SHEET NO.	
ROADWAY DESIGN ENGINEER	HYDRAULICS ENGINEER

STATE OF NORTH CAROLINA
DIVISION OF HIGHWAYS

IMPERVIOUS DIKE – SAND BAGS

*NOT TO SCALE

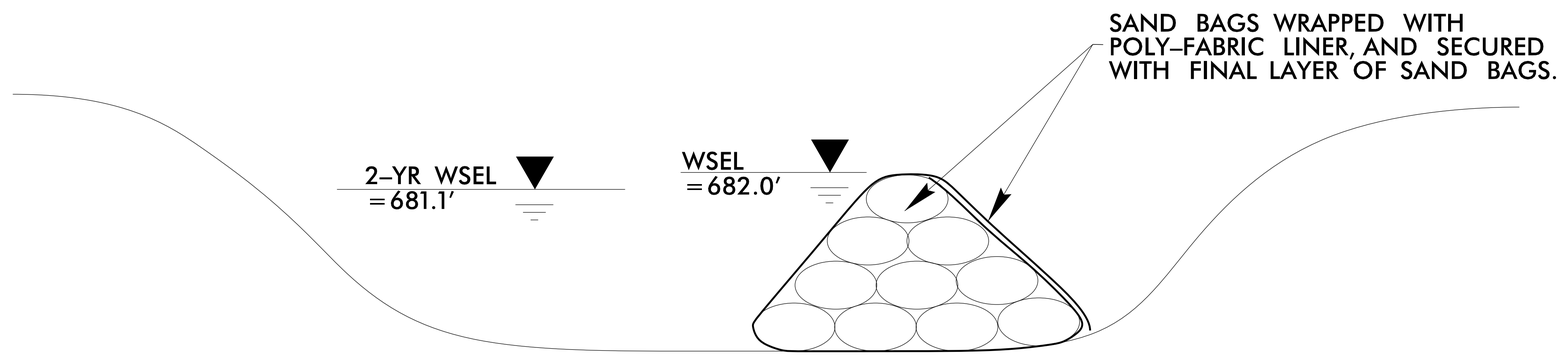

NOTES:

1. CONTRACTOR MAY PROPOSE ALTERNATE IMPERVIOUS DIKE TO BE APPROVED BY ENGINEER IN CHARGE.

2. DIKE INSTALLATION:

   i. REMOVE BRANCHES AND LARGE ROCKS FROM AREA WHERE THE SAND BAGS WILL BE PLACED.
   ii. LAY OUT THE IMPERVIOUS POLY–FABRIC LINER WITH THE CENTER OF THE LINER LOCATED OVER THE CENTER OF THE SAND BAG DIKE.
   iii. PLACE THE SAND BAGS TO THE DESIRED HEIGHT. THE DIKES SHALL HAVE A WIDTH SUITABLE TO SUPPORT THE HEIGHT. EACH ROW SHALL BE OFFSET SO THE JOINTS ARE STAGGERED. PACK SAND BAGS TIGHTLY TOGETHER.
   iv. WRAP IMPERVIOUS POLY–FABRIC LINER AROUND SAND BAG DIKE AND SECURE WITH FINAL LAYER OF SAND BAGS.

3. DEWATER CONSTRUCTION AREA USING PUMP–AND–TREAT TECHNIQUE. SILT SOCK OR SILT BASIN ARE ACCEPTABLE TREATMENT METHODS. RETURN TREATED, NON–TURBID, WATER BACK TO STREAM.

4. CONTRACTOR MAY RE–USE FILTERED SOIL ON SITE, AND STABILIZE.

$$$

DocuSign Envelope ID: 63B99F10-5B56-439E-BCE5-B5D5838AF970

PROJECT REFERENCE NO.	SHEET NO.
17BP.9.R.25	EC-2B
R/W SHEET NO.	
ROADWAY DESIGN ENGINEER	HYDRAULICS ENGINEER

SILT FENCE WATTLE BREAK DETAIL

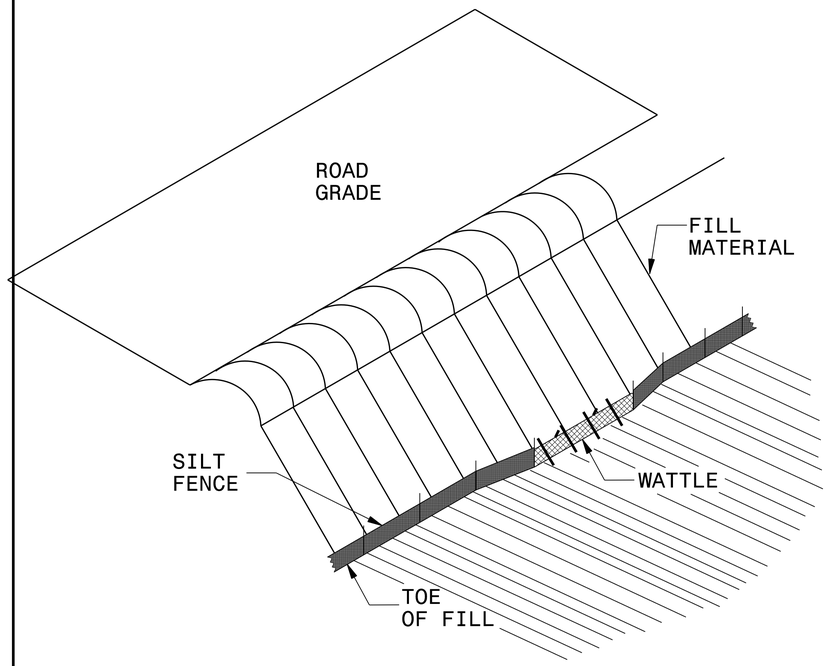

ISOMETRIC VIEW

NOTES:

USE MINIMUM 12 IN. DIAMETER EXCELSIOR WATTLE AND LENGTH OF 10 FT.

EXCAVATE A 1 TO 2 INCH TRENCH FOR WATTLE TO BE PLACED.

DO NOT PLACE WATTLE ON TOE OF SLOPE.

USE 2 FT. WOODEN STAKES WITH A 2 IN. BY 2 IN. NOMINAL CROSS SECTION.

INSTALL A MINIMUM OF 2 UPSLOPE STAKES AND 4 DOWNSLOPE STAKES AT AN ANGLE TO WEDGE WATTLE TO GROUND.

PROVIDE STAPLES MADE OF 0.125 IN. DIAMETER STEEL WIRE FORMED INTO A U SHAPE NOT LESS THAN 12″ IN LENGTH.

INSTALL STAPLES APPROXIMATELY EVERY 1 LINEAR FOOT ON BOTH SIDES OF WATTLE AND AT EACH END TO SECURE IT TO THE SOIL.

WATTLE INSTALLATION CAN BE ON OUTSIDE OF THE SILT FENCE AS DIRECTED.

INSTALL TEMPORARY SILT FENCE IN ACCORDANCE WITH SECTION 1605 OF THE STANDARD SPECIFICATIONS.

INSET A

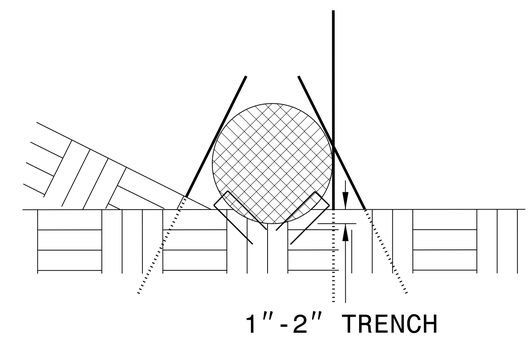

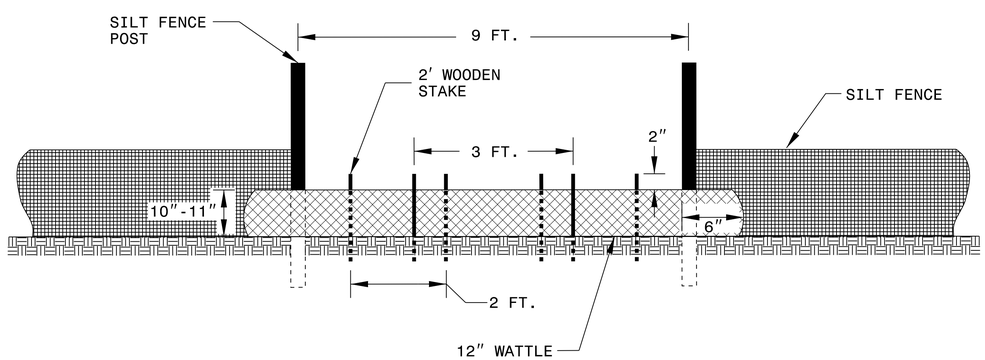

VIEW FROM SLOPE

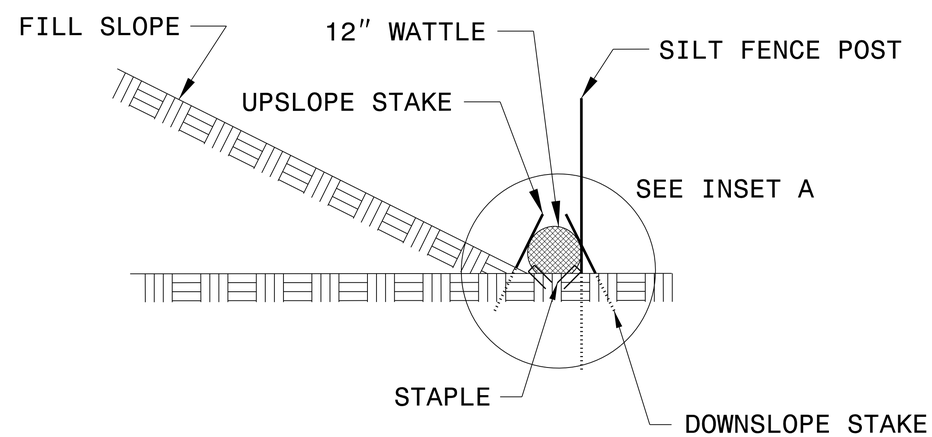

SIDE VIEW

5/14/99
26-MAR-2016 17:10
$$$$HSE_PNAME $$$$
$$$$HSE_LNAME $$$$
$$$$HSE_FNAME $$$$
$$$$HSE_TITLE $$$$
$$$$HSE_EMAIL $$$$
$$$$HSE_PHONE $$$$
$$$$HSE_FAX $$$$
$$$$HSE_ADDR $$$$
$$$$HSE_CITY $$$$
$$$$HSE_STATE $$$$
$$$$HSE_ZIP $$$$
$$$$HSE_COUNTRY

DocuSign Envelope ID: 63B99F10-5B56-439E-BCE5-B5D5838AF970

5/14/99

PROJECT REFERENCE NO.	SHEET NO.
17BP.9.R.25	EC-3
R/W SHEET NO.	
ROADWAY DESIGN ENGINEER	HYDRAULICS ENGINEER

STATE OF NORTH CAROLINA
DIVISION OF HIGHWAYS

SOIL STABILIZATION TIMEFRAMES

SITE DESCRIPTION	STABILIZATION TIME	TIMEFRAME EXCEPTIONS
PERIMETER DIKES, SWALES, DITCHES, AND SLOPES	7 DAYS	NONE
HIGH QUALITY WATER (HQW) ZONES	7 DAYS	NONE
SLOPES STEEPER THAN 3:1	7 DAYS	IF SLOPES ARE 10' OR LESS IN LENGTH AND ARE NOT STEEPER THAN 2:1, 14 DAYS ARE ALLOWED
SLOPES 3:1 OR FLATTER	14 DAYS	7 DAYS FOR SLOPES GREATER THAN 50' IN LENGTH
ALL OTHER AREAS WITH SLOPES FLATTER THAN 4:1	14 DAYS	NONE, EXCEPT FOR PERIMETERS AND HQW ZONES

28-MAR-2016 17:10
\290083\Hydraulics\CADD\PSH\290083_Rdy_EC_tsh.dgn
$$$$USERNAME$$$$

DocuSign Envelope ID: 63B99F10-5B56-439E-BCE5-B5D5838AF970

8/17/99

PROJECT REFERENCE NO.	SHEET NO.
17BP.9.R.25	EC-4
R/W SHEET NO.	
ROADWAY DESIGN ENGINEER	HYDRAULICS ENGINEER

DAVIE COUNTY BRIDGE # 83

NAD 83/ NSRS 2007

CONSTRUCTION SEQUENCING:

PHASE 1:

A. INSTALL ALL ESC PRACTICES PRIOR TO COMMENCEMENT OF ANY LAND-DISTURBING ACTIVIES.

PHASE 2:

A. CONSTRUCT IMPERVIOUS DIKE EAST SIDE (NOTE 2), DIVERTING STREAM FLOWS TO WEST SIDE.

i. REMOVE BRANCHES AND LARGE ROCKS FROM AREA WHERE THE SAND BAGS WILL BE PLACED.
ii. LAY OUT THE IMPERVIOUS POLY-FABRIC LINER WITH THE CENTER OF THE LINER LOCATED OVER THE CENTER OF THE SAND BAG DIKE.
iii. PLACE THE SAND BAGS TO THE DESIRED HEIGHT. THE DIKES SHALL HAVE A WIDTH SUITABLE TO SUPPORT THE HEIGHT. EACH ROW SHALL BE OFFSET SO THE JOINTS ARE STAGGERED. PACK SAND BAGS TIGHTLY TOGETHER.
iv. WRAP IMPERVIOUS POLY-FABRIC LINER AROUND SAND BAG DIKE AND SECURE WITH FINAL LAYER OF SAND BAGS.

B. CONSTRUCT TEMPORARY SEDIMENT BASIN.

C. COMMENCE DEMOLITION AND CONSTRUCTION EAST SIDE.

D. PUMP WATER BEHIND DIKE AS NEEDED FOR CONSTRUCTION ACTIVITIES. FILTER WATER BEFORE DISCHARGE BACK TO STREAM.

E. STABILIZE SITE PRIOR TO REMOVAL OF TEMPORARY DIKE AND BASIN.

PHASE 3:

A. UPON STABILIZATION, CAREFULLY REMOVE DIKE AND INSTALL ON WEST SIDE, DIVERTING STREAM FLOWS TO EAST SIDE.

B. REPEAT STEPS 'A' THRU 'E' FOR WEST SIDE CONSTRUCTION.

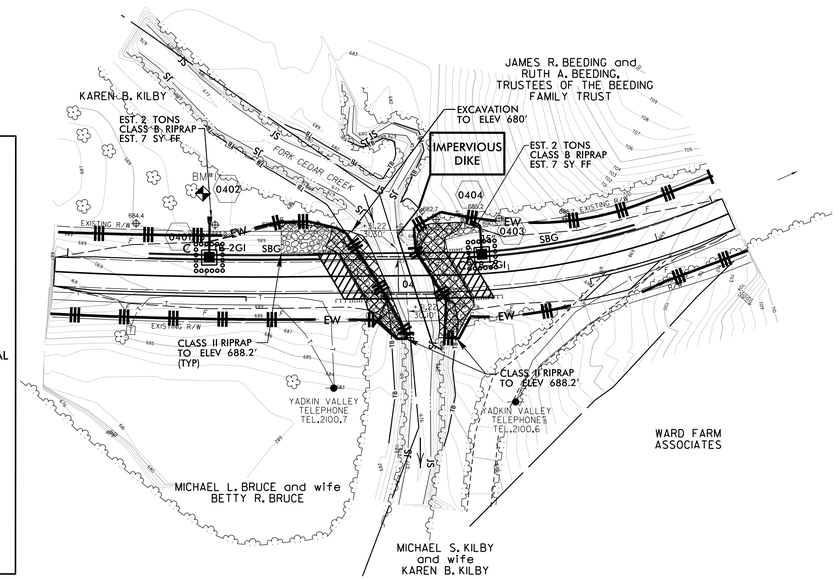

NOTES:

1. NO CONSTRUCTION ACTIVITY SHALL COMMENCE UNTIL ALL ESC PRACTICES IN PLACE.
2. CONTRACTOR HAS DISCRETION TO CONSTRUCT EITHER EAST SIDE OR WEST SIDE FIRST.
3. PLAN SHOWS SETUP FOR EAST SIDE ACTIVITIES. SIMILAR FOR WEST SIDE.
4. SHEET REPRESENTS CLEAR AND GRUBBING, AS WELL AS FINAL EROSION CONTROL FOR CONSTRUCTION SHEET 4.

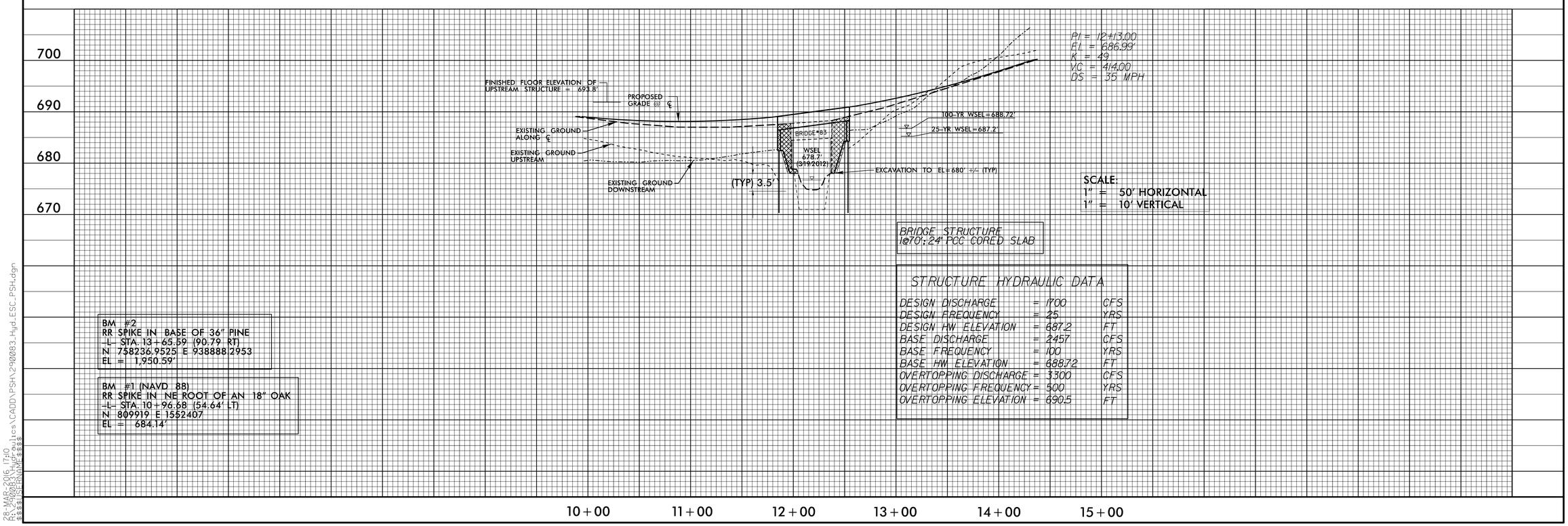

SCALE:
1" = 50' HORIZONTAL
1" = 10' VERTICAL

BRIDGE STRUCTURE
1@70'; 24" PCC CORED SLAB

STRUCTURE HYDRAULIC DATA

DESIGN DISCHARGE	= 1700	CFS
DESIGN FREQUENCY	= 25	YRS
DESIGN HW ELEVATION	= 687.2	FT
BASE DISCHARGE	= 2457	CFS
BASE FREQUENCY	= 100	YRS
BASE HW ELEVATION	= 688.72	FT
OVERTOPPING DISCHARGE	= 3300	CFS
OVERTOPPING FREQUENCY	= 500	YRS
OVERTOPPING ELEVATION	= 690.5	FT

BM #2
RR SPIKE IN BASE OF 36" PINE
-L- STA. 13+65.59 (90.79' RT)
N 758236.9525 E 938888.2953
EL = 1,950.59'

BM #1 (NAVD 88)
RR SPIKE IN NE ROOT OF AN 18" OAK
-L- STA. 10+96.68 (54.64' LT)
N 809919 E 1552407
EL = 684.14'

28-MAR-2016 17:10
R:\Roadway\Proj\17bp9r25_sht_plns\CADD\PSH\290083_Hyd_ESC_PSH.dgn
$$USERNAME$$

DocuSign Envelope ID: 63B99F10-5B56-439E-BCE5-B5D5838AF970

TIP PROJECT: 17BP.9.R.25

STATE	STATE PROJECT REFERENCE NO.	SHEET NO.	TOTAL SHEETS
N.C.	17BP.9.R.25	UO-1	2

STATE OF NORTH CAROLINA
DIVISION OF HIGHWAYS

UTILITIES BY OTHERS PLANS

DAVIE COUNTY

LOCATION: BRIDGE NO. 83 OVER SUGAR CREEK ON SR 1436 (PINEBROOK SCHOOL ROAD)

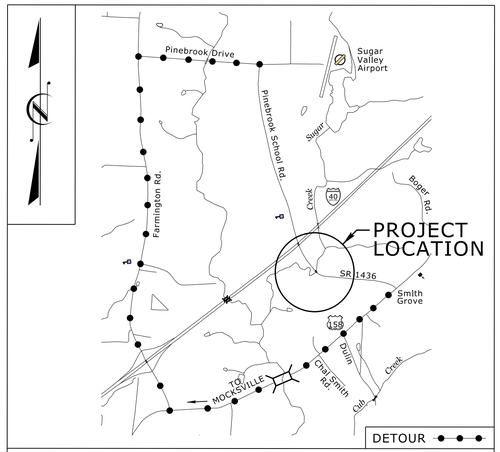

VICINITY MAP

4

UO-2

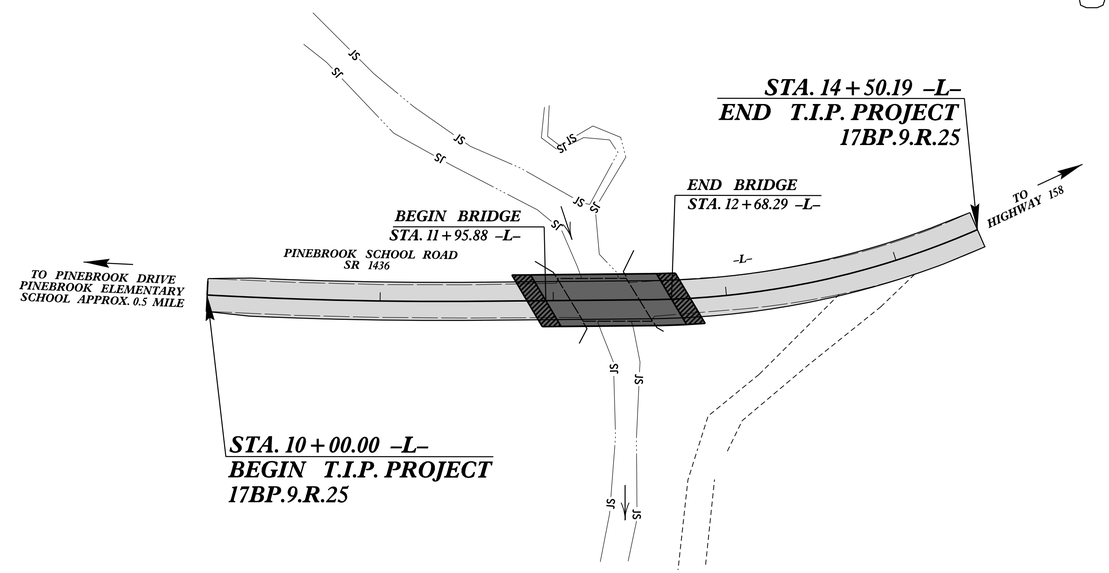

GRAPHIC SCALES

50 25 0 50 100
PLANS

INDEX OF UTILITY SHEETS

SHEET NO.	DESCRIPTION
UO–1	TITLE SHEET
UO–2	UTILITY PLAN SHEETS

UTILITY OWNERS

TELEPHONE FO – YADKIN VALLEY TELEPHONE COMPANY

25-MAR-2016 12:55
R:\290083\Utilities\17BP.3.R.25_UO_tsh.dgn
$$$$USERNAME$$$$

DocuSign Envelope ID: 63B99F10-5B56-439E-BCE5-B5D5838AF970

PROJECT REFERENCE NO.	SHEET NO.
17BP.9.R.25	U0-2
UTILITY BY OTHERS PLANS	

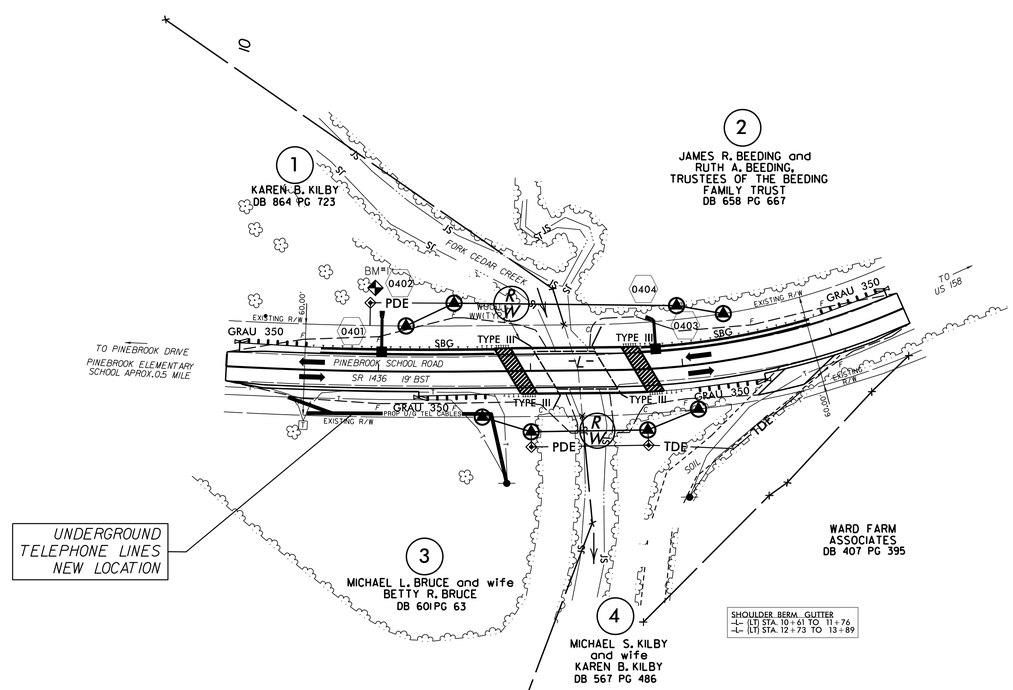

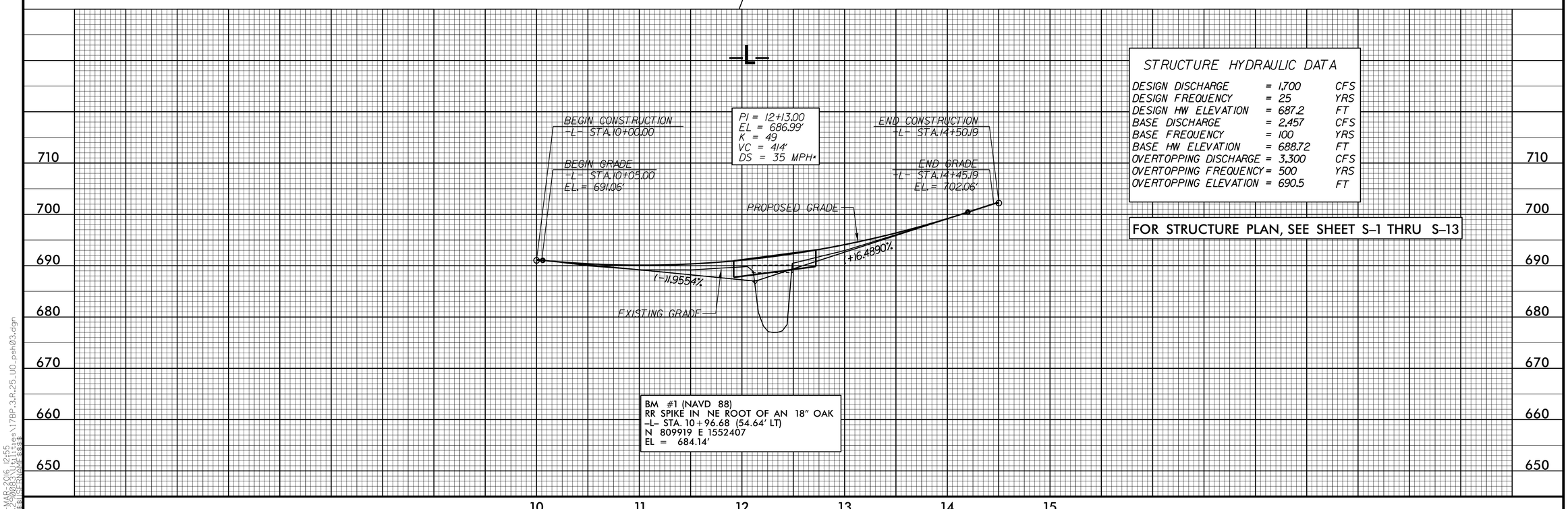

STRUCTURE HYDRAULIC DATA

DESIGN DISCHARGE	=	1,700	CFS
DESIGN FREQUENCY	=	25	YRS
DESIGN HW ELEVATION	=	687.2	FT
BASE DISCHARGE	=	2,457	CFS
BASE FREQUENCY	=	100	YRS
BASE HW ELEVATION	=	688.72	FT
OVERTOPPING DISCHARGE	=	3,300	CFS
OVERTOPPING FREQUENCY	=	500	YRS
OVERTOPPING ELEVATION	=	690.5	FT

FOR STRUCTURE PLAN, SEE SHEET S-1 THRU S-13

BM #1 (NAVD 88)
RR SPIKE IN NE ROOT OF AN 18" OAK
-L- STA. 10+96.68 (54.64' LT)
N 809919 E 1552407
EL = 684.14'

8/17/99

25-MAR-2016 12:55
R:\2608\3\Utilities\17BP.3.R.25_U0_psh03.dgn
$$$$USERNAME$$$$

DocuSign Envelope ID: 63B99F10-5B56-439E-BCE5-B5D5838AF970

PROJ. REFERENCE NO.	SHEET NO.
17BP.9.R.25	X-0

STATE OF NORTH CAROLINA
DIVISION OF HIGHWAYS

CROSS SECTON INDEX SHEET

Chain	Beg Sta	End Sta	LOC	Sheet No.	Comments / Log File
-L-	10+00.00	14+50.00		X-1 TO X-3	

Chain	Beg Sta	End Sta	LOC	Sheet No.	Comments / Log File

DocuSign Envelope ID: 63B99F10-5B56-439E-BCE5-B5D5838AF970

PROJ. REFERENCE NO.	SHEET NO.
17BP.9.R.25	X–0A

STATE OF NORTH CAROLINA
DIVISION OF HIGHWAYS

NOTE: Embankment does not include backfill for undercut.

CROSS-SECTION SUMMARY

Station -L-	Uncl. Exc. (cu. yd.)	Undercut (cu. yd.)	Embt (cu. yd.)	Station	Uncl. Exc. (cu. yd.)	Undercut (cu. yd.)	Embt (cu. yd.)	Station	Uncl. Exc. (cu. yd.)	Undercut (cu. yd.)	Embt (cu. yd.)	Station	Uncl. Exc. (cu. yd.)	Undercut (cu. yd.)	Embt (cu. yd.)
10+00.00	0	0	0												
10+50.00	0	0	5												
11+00.00	0	0	19												
11+50.00	0	0	46												
11+95.88	0	0	57												
12+00.00	0	0	0												
12+50.00	0	0	0												
13+00.00	0	0	45												
13+50.00	0	0	44												
14+00.00	2	0	11												
14+50.00	2	0	3												

NOTE: Approximate quantities only. Unclassified Excavation, Borrow Excavation, Shoulder Borrow, Fine Grading, Clearing and Grubbing, and Removal of Existing Pavement will be paid for at the contract lump sum price for "Grading".

DocuSign Envelope ID: 63B99F10-5B56-439E-BCE5-B5D5838AF970

PROJ. REFERENCE NO.	SHEET NO.
17BP.9.R.25	X-1

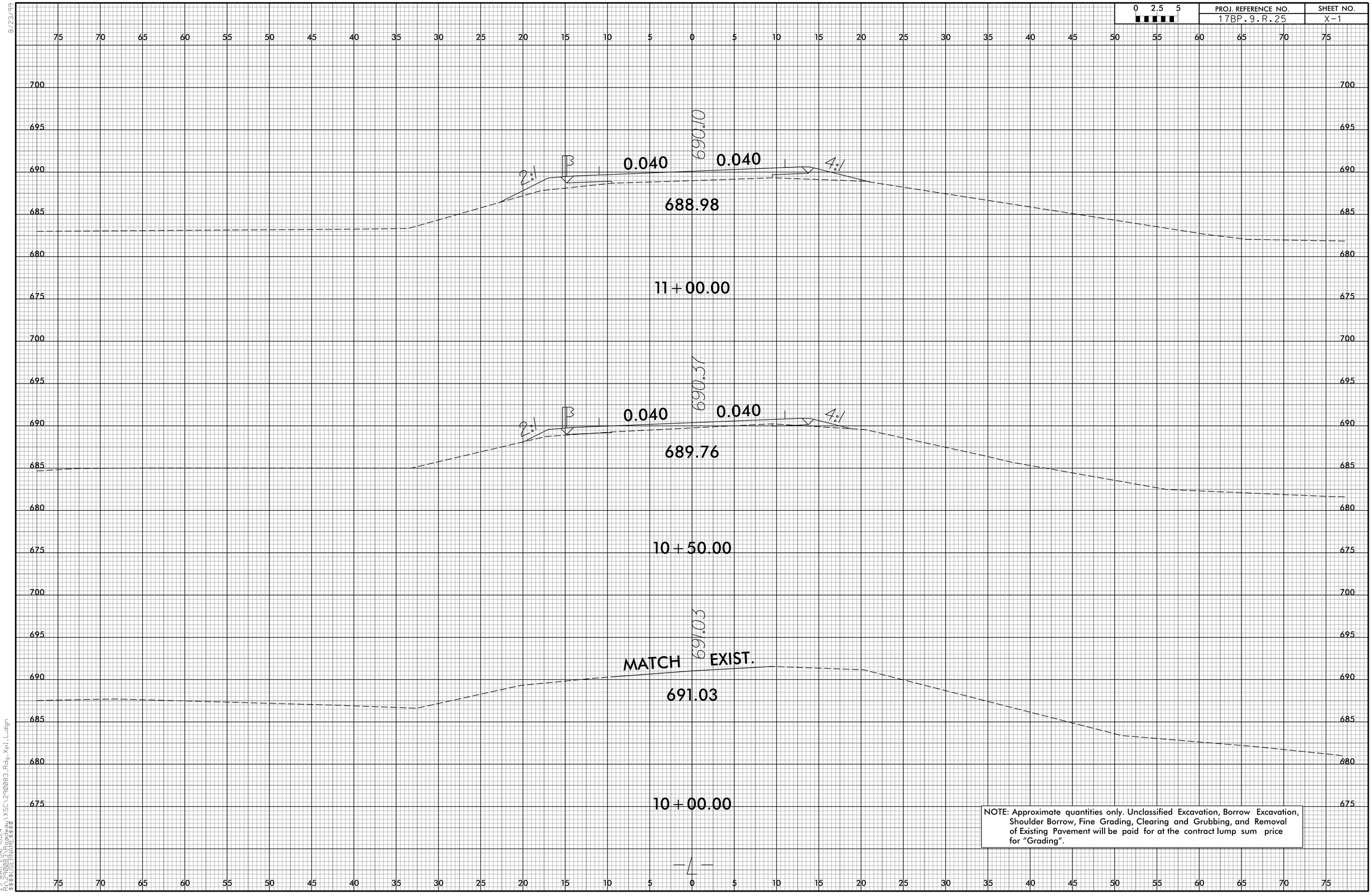

NOTE: Approximate quantities only. Unclassified Excavation, Borrow Excavation, Shoulder Borrow, Fine Grading, Clearing and Grubbing, and Removal of Existing Pavement will be paid for at the contract lump sum price for "Grading".

8/23/99
29-MAR-2016 10:24
R:\290083\Roadway\XSC\290083_Rdy_Xpl_L.dgn
$$$$USERNAME$$$$

DocuSign Envelope ID: 63B99F10-5B56-439E-BCE5-B5D5838AF970

PROJ. REFERENCE NO.	SHEET NO.
17BP.9.R.25	X-2

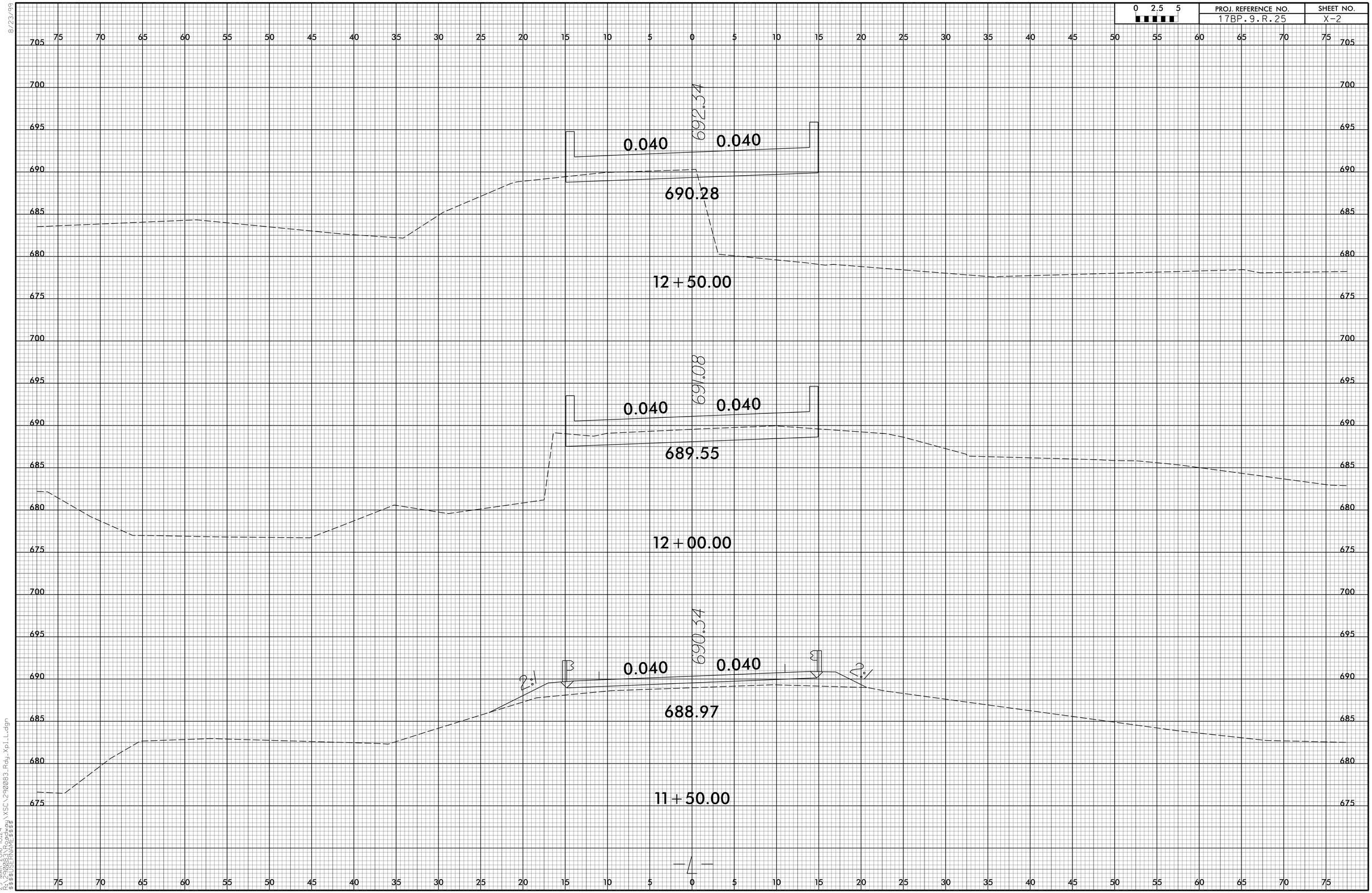

8/23/99
29-MAR-2016 10:24
R:\290083\Roadway\XSC\290083_Rdy_Xpl_L.dgn
$$$$USERNAME$$$$

DocuSign Envelope ID: 63B99F10-5B56-439E-BCE5-B5D5838AF970

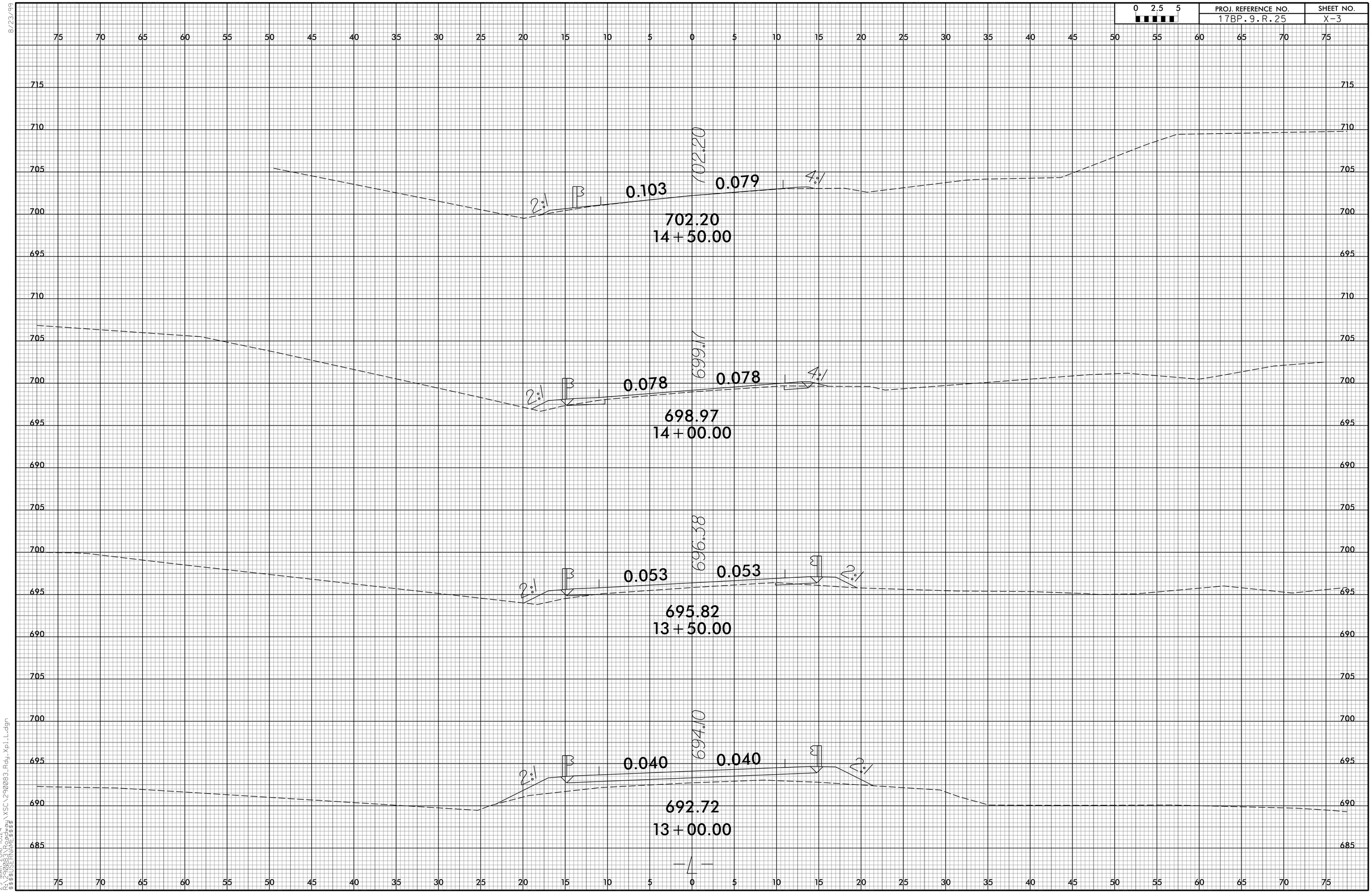

8/23/99
29-MAR-2016 10:24
R:\290083\Roadway\XSC\290083_Rdy_Xpl_L.dgn
$$$$USERNAME$$$$

DocuSign Envelope ID: 63B99F10-5B56-439E-BCE5-B5D5838AF970

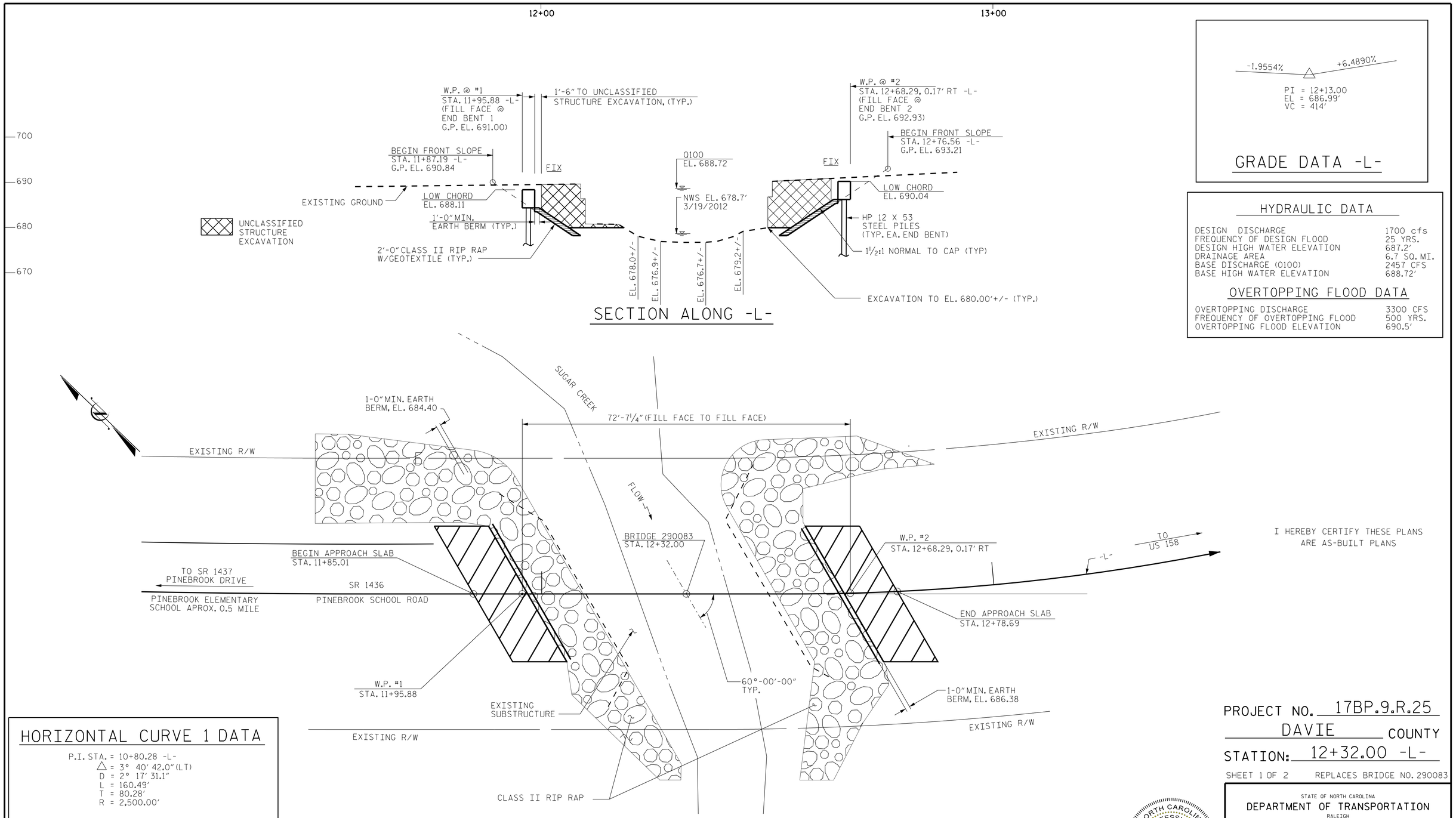

-1.9554% +6.4890%

PI = 12+13.00
EL = 686.99'
VC = 414'

GRADE DATA -L-

HYDRAULIC DATA

DESIGN DISCHARGE	1700 cfs
FREQUENCY OF DESIGN FLOOD	25 YRS.
DESIGN HIGH WATER ELEVATION	687.2'
DRAINAGE AREA	6.7 SQ. MI.
BASE DISCHARGE (Q100)	2457 CFS
BASE HIGH WATER ELEVATION	688.72'

OVERTOPPING FLOOD DATA

OVERTOPPING DISCHARGE	3300 CFS
FREQUENCY OF OVERTOPPING FLOOD	500 YRS.
OVERTOPPING FLOOD ELEVATION	690.5'

I HEREBY CERTIFY THESE PLANS
ARE AS-BUILT PLANS

HORIZONTAL CURVE 1 DATA

P.I. STA. = 10+80.28 -L-
△ = 3° 40' 42.0" (LT)
D = 2° 17' 31.1"
L = 160.49'
T = 80.28'
R = 2,500.00'

HORIZONTAL CURVE 2 DATA

P.I. STA. = 13+54.41 -L-
△ = 23° 01' 35.7" (LT)
D = 11° 50' 04.5"
L = 194.57'
T = 98.79'
R = 485.00'

PROJECT NO. 17BP.9.R.25
DAVIE COUNTY
STATION: 12+32.00 -L-

SHEET 1 OF 2 REPLACES BRIDGE NO. 290083

STATE OF NORTH CAROLINA
DEPARTMENT OF TRANSPORTATION
RALEIGH

GENERAL DRAWING
BRIDGE ON SR 1436
BETWEEN SR 1437 AND HWY 158
OVER SUGAR CREEK

NORTH CAROLINA PROFESSIONAL SEAL 030046 ENGINEER MATTHEW PAYNE
3/30/2016
DocuSigned by: Matthew Payne
3C4D1B4E4E4D7...

DOCUMENT NOT CONSIDERED
FINAL UNLESS ALL
SIGNATURES COMPLETED

ATKINS
1616 E. MILLBROOK ROAD, SUITE #310
RALEIGH, NORTH CAROLINA 27609
(919) 876-6888 NCBEES #F-0326

REVISIONS						
NO.	BY:	DATE:	NO.	BY:	DATE:	
1			3			
2			4			

SHEET NO. S-1
TOTAL SHEETS 13

DRAWN BY : C. BLAKES DATE : 11/2012
CHECKED BY : M. PAYNE DATE : 03/2016

DocuSign Envelope ID: 63B99F10-5B56-439E-BCE5-B5D5838AF970

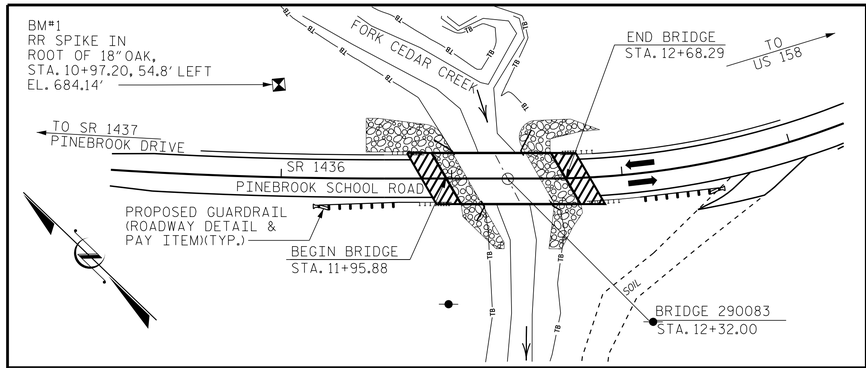

LOCATION SKETCH

FOR UTILITY INFORMATION, SEE UTILITY PLANS AND SPECIAL PROVISIONS

FOUNDATION NOTES

PILES AT END BENT NO. 1 ARE DESIGNED FOR A FACTORED RESISTANCE OF 97 TONS PER PILE.

DRIVE PILES AT END BENT NO. 1 TO A REQUIRED DRIVING RESISTANCE OF 162 TONS PER PILE.

PILES AT END BENT NO. 2 ARE DESIGNED FOR A FACTORED RESISTANCE OF 97 TONS PER PILE.

DRIVE PILES AT END BENT NO. 2 TO A REQUIRED DRIVING RESISTANCE OF 162 TONS PER PILE.

STEEL H-PILE POINTS ARE REQUIRED FOR STEEL H-PILES AT END BENT NO. 1 AND END BENT NO. 2. FOR STEEL PILE POINTS, SEE SECTION 450 OF THE STANDARD SPECIFICATIONS.

TESTING PILES WITH THE PDA DURING DRIVING, RESTRIKING, OR REDRIVING MAY BE REQUIRED. THE ENGINEER WILL DETERMINE THE NEED FOR PDA TESTING. FOR PDA TESTING, SEE SECTION 450 OF THE STANDARD SPECIFICATIONS (AND FOR PILE DRIVING CRITERIA, SEE PILE DRIVING CRITERIA PROVISION).

FOR PILES, SEE SECTION 450 OF THE STANDARD SPECIFICATION.

TOTAL BILL OF MATERIAL

	REMOVAL OF EXISTING STRUCTURE	UNCLASSIFIED STRUCTURE EXCAVATION	CLASS A CONCRETE	BRIDGE APPROACH SLABS	REINFORCING STEEL	HP 12 X 53 STEEL PILES		STEEL PILE POINTS	PDA TESTING	VERTICAL CONCRETE BARRIER RAIL	RIP RAP CLASS II (2'-0" THICK)	GEOTEXTILE FOR DRAINAGE	ELASTOMERIC BEARINGS	3'-0" X 2'-0" PRESTRESSED CONCRETE CORED SLABS		ASBESTOS ASSESSMENT
	LUMP SUM	LUMP SUM	CU. YDS.	LUMP SUM	LBS.	NO.	LIN.FT.	NO.	EA.	LIN.FT.	TON	SQ.YDS.	LUMP SUM	NO.	LIN.FT.	LUMP SUM
SUPERSTRUCTURE				LUMP SUM						140.29			LUMP SUM	10	700	LUMP SUM
END BENT NO. 1		LUMP SUM	22.6		2736	5	75	5			268	297				
END BENT NO. 2		LUMP SUM	22.6		2736	5	75	5			233	258				
TOTAL	LUMP SUM	LUMP SUM	45.2	LUMP SUM	5472	10	150	10	1	140.29	501	555	LUMP SUM	10	700	LUMP SUM

GENERAL NOTES

ASSUMED LIVE LOAD = HL 93 OR ALTERNATE LOADING.

THIS BRIDGE HAS BEEN DESIGNED IN ACCORDANCE WITH THE REQUIREMENTS OF THE AASHTO LRFD BRIDGE DESIGN SPECIFICATIONS.

FOR OTHER DESIGN DATA AND GENERAL NOTES, SEE SHEET SN.

FOR EROSION CONTROL MEASURES SEE EROSION CONTROL PLANS.

THIS STRUCTURE HAS BEEN DESIGNED IN ACCORDANCE WITH "HEC 18 - EVALUATING SCOUR AT BRIDGES".

FOR CRANE SAFETY, SEE SPECIAL PROVISIONS.

FOR SUBMITTAL OF WORKING DRAWINGS, SEE SPECIAL PROVISIONS.

FOR FALSEWORK AND FORMWORK, SEE SPECIAL PROVISIONS.

FOR GROUT FOR STRUCTURES, SEE SPECIAL PROVISIONS.

THE MATERIAL SHOWN IN THE CROSS-HATCHED AREA SHALL BE EXCAVATED FOR A DISTANCE OF 30 FT. EACH SIDE OF CENTERLINE ROADWAY AS DIRECTED BY THE ENGINEER. THIS WORK WILL BE PAID FOR BY THE CONTRACT LUMP SUM PRICE FOR UNCLASSIFIED STRUCTURE EXCAVATION. SEE SECTION 412 OF THE STANDARD SPECIFICATIONS.

REMOVAL OF THE EXISTING BRIDGE SHALL BE PERFORMED SO AS NOT TO ALLOW DEBRIS TO FALL INTO THE WATER. THE CONTRACTOR SHALL REMOVE THE BRIDGE AND SUBMIT PLANS FOR DEMOLITION IN ACCORDANCE WITH ARTICLE 402-2 OF THE STANDARD SPECIFICATIONS.

THIS BRIDGE IS LOCATED IN SEISMIC ZONE I.

ASPHALT WEARING SURFACE IS INCLUDED IN ROADWAY QUANTITY ON ROADWAY PLANS.

THE SUBSTRUCTURE OF THE EXISTING BRIDGE INDICATED ON THE PLANS IS FROM THE BEST INFORMATION AVAILABLE. SINCE THIS INFORMATION IS SHOWN FOR THE CONVENIENCE OF THE CONTRACTOR, THE CONTRACTOR SHALL HAVE NO CLAIM WHATSOEVER AGAINST THE DEPARTMENT OF TRANSPORTATION FOR ANY DELAYS OR ADDITIONAL COST INCURRED BASED ON DIFFERENCES BETWEEN THE EXISTING BRIDGE SUBSTRUCTURE SHOWN ON THE PLANS AND ACTUAL CONDITIONS AT THE PROJECT SITE.

INASMUCH AS THE PAINT SYSTEM ON THE EXISTING STRUCTURAL STEEL CONTAINS LEAD, THE CONTRACTOR'S ATTENTION IS DIRECTED TO ARTICLE 107-1 OF THE STANDARD SPECIFICATIONS. ANY COSTS RESULTING FROM COMPLIANCE WITH APPLICABLE STATE OR FEDERAL REGULATIONS PERTAINING TO HANDLING OF THE MATERIALS CONTAINING LEAD BASED PAINT SHALL BE INCLUDED IN THE BID PRICE FOR "REMOVAL OF EXISTING STRUCTURE AT STATION 12+32.00 -L-".

THE QUANTITY OF RIP RAP TO BE PAID FOR WILL BE THE ACTUAL NUMBER OF TONS OF EACH CLASS OF RIP RAP WHICH HAS BEEN INCORPORATED INTO THE COMPLETED AND ACCEPTED WORK. THE RIP RAP WILL BE MEASURED BY BEING WEIGHTED IN TRUCKS ON CERTIFIED PLATFORM SCALES OR OTHER CERTIFIED WEIGHING DEVICES. THE QUANTITY OF RIP RAP WILL BE PAID AT CONTRACT UNIT PRICE PER TON.

THE EXISTING STRUCTURE CONSISTING OF A SINGLE SPAN OF 41 FEET TIMBER DECK ON STEEL I-BEAMS, WITH A CLEAR ROADWAY WIDTH OF 25 FEET ON TIMBER CAPS, POSTS, SILLS AND CONCRETE ENCASED CONCRETE PILES SHALL BE REMOVED. THE EXISTING BRIDGE IS PRESENTLY POSTED FOR LOAD LIMIT. SHOULD THE STRUCTURAL INTEGRITY OF THE BRIDGE DETERIORATE DURING CONSTRUCTION OF THE PROPOSED BRIDGE, A LOAD LIMIT MAY BE POSTED AND MAY BE REDUCED AS FOUND NECESSARY DURING THE LIFE OF THE PROJECT.

FOR ASBESTOS ASSESSMENT, SEE SPECIAL PROVISIONS.

PROJECT NO. 17BP.9.R.25
DAVIE COUNTY
STATION: 12+32.00 -L-

SHEET 2 OF 2

DOCUMENT NOT CONSIDERED FINAL UNLESS ALL SIGNATURES COMPLETED

NORTH CAROLINA PROFESSIONAL SEAL 030046 ENGINEER MATTHEW PAYNE 3/30/2016
DocuSigned by: Matthew Payne
3C4001B6A0F4407...

ATKINS
1616 E. MILLBROOK ROAD, SUITE #310
RALEIGH, NORTH CAROLINA 27609
(919) 876-6888
NCBEES #F-0326

STATE OF NORTH CAROLINA
DEPARTMENT OF TRANSPORTATION
RALEIGH

GENERAL DRAWING
BRIDGE ON SR 1436
BETWEEN SR 1437 AND HWY 158
OVER SUGAR CREEK

REVISIONS						SHEET NO.
NO.	BY:	DATE:	NO.	BY:	DATE:	S-2
1			3			TOTAL SHEETS
2			4			13

DRAWN BY : C. BLAKES DATE : 11/2012
CHECKED BY : M. PAYNE DATE : 03/2016

18-MAR-2016 11:30
$$$$$$$$$$$$$$$$$$$$$$$$DGN$$$$$$$$$$$$$$$$$$$$$$$$
$$$$USERNAME$$$$

DocuSign Envelope ID: 63B99F10-5B56-439E-BCE5-B5D5838AF970

LOAD AND RESISTANCE FACTOR RATING (LRFD) SUMMARY FOR PRESTRESSED CONCRETE GIRDERS

LEVEL		VEHICLE	WEIGHT (W) (TONS)	CONTROLLING LOAD RATING	MINIMUM RATING FACTORS (RF)	TONS = W X RF	STRENGTH I LIMIT STATE											SERVICE III LIMIT STATE						COMMENT NUMBER
							LIVELOAD FACTORS	MOMENT					SHEAR					LIVELOAD FACTORS	MOMENT					
								DISTRIBUTION FACTORS (DF)	RATING FACTOR	SPAN	GIRDER LOCATION	DISTANCE FROM LEFT END OF SPAN (ft)	DISTRIBUTION FACTORS (DF)	RATING FACTOR	SPAN	GIRDER LOCATION	DISTANCE FROM LEFT END OF SPAN (ft)		DISTRIBUTION FACTORS (DF)	RATING FACTOR	SPAN	GIRDER LOCATION	DISTANCE FROM LEFT END OF SPAN (ft)	
DESIGN LOAD RATING		HL-93(Inv)	N/A	1	1.06	--	1.75	0.248	1.14	70'	EL	34.423	0.655	**1.06**	70'	EL	**6.885**	0.80	0.248	1.11	70'	EL	34.423	
		HL-93(Opr)	N/A	--	1.374	--	1.35	0.248	1.48	70'	EL	34.423	0.655	1.37	70'	EL	6.885	N/A	--	--	--	--	--	
		HS-20(Inv)	36.000	2	1.32	47.508	1.75	0.248	1.48	70'	EL	34.423	0.655	**1.32**	70'	EL	**6.885**	0.80	0.248	1.44	70'	EL	34.423	
		HS-20(Opr)	36.000	--	1.711	61.585	1.35	0.248	1.91	70'	EL	34.423	0.655	1.71	70'	EL	6.885	N/A	--	--	--	--	--	
LEGAL LOAD RATING	SV	SNSH	13.500	--	3.204	43.258	1.4	0.248	4.12	70'	EL	34.423	0.655	3.9	70'	EL	6.885	0.80	0.248	3.20	70'	EL	34.423	
		SNGARBS2	20.000	--	2.403	48.063	1.4	0.248	3.09	70'	EL	34.423	0.655	2.78	70'	EL	6.885	0.80	0.248	2.40	70'	EL	34.423	
		SNAGRIS2	22.000	--	2.282	50.21	1.4	0.248	2.94	70'	EL	34.423	0.655	2.58	70'	EL	6.885	0.80	0.248	2.28	70'	EL	34.423	
		SNCOTTS3	27.250	--	1.595	43.463	1.4	0.248	2.05	70'	EL	34.423	0.655	1.95	70'	EL	6.885	0.80	0.248	1.59	70'	EL	34.423	
		SNAGGRS4	34.925	--	1.339	46.755	1.4	0.248	1.72	70'	EL	34.423	0.655	1.62	70'	EL	6.885	0.80	0.248	1.34	70'	EL	34.423	
		SNS5A	35.550	--	1.309	46.526	1.4	0.248	1.68	70'	EL	34.423	0.655	1.65	70'	EL	6.885	0.80	0.248	1.31	70'	EL	34.423	
		SNS6A	39.950	--	1.203	48.069	1.4	0.248	1.55	70'	EL	34.423	0.655	1.5	70'	EL	6.885	0.80	0.248	1.20	70'	EL	34.423	
		SNS7B	42.000	--	1.146	48.129	1.4	0.248	1.47	70'	EL	34.423	0.655	1.48	70'	EL	6.885	0.80	0.248	1.15	70'	EL	34.423	
	TTST	TNAGRIT3	33.000	--	1.468	48.444	1.4	0.248	1.89	70'	EL	34.423	0.655	1.79	70'	EL	6.885	0.80	0.248	1.47	70'	EL	34.423	
		TNT4A	33.075	--	1.475	48.79	1.4	0.248	1.9	70'	EL	34.423	0.655	1.74	70'	EL	6.885	0.80	0.248	1.48	70'	EL	34.423	
		TNT6A	41.600	--	1.208	50.272	1.4	0.248	1.55	70'	EL	34.423	0.655	1.58	70'	EL	6.885	0.80	0.248	1.21	70'	EL	34.423	
		TNT7A	42.000	--	1.216	51.061	1.4	0.248	1.56	70'	EL	34.423	0.655	1.55	70'	EL	6.885	0.80	0.248	1.22	70'	EL	34.423	
		TNT7B	42.000	--	1.261	52.955	1.4	0.248	1.62	70'	EL	34.423	0.655	1.44	70'	EL	6.885	0.80	0.248	1.26	70'	EL	34.423	
		TNAGRIT4	43.000	--	1.197	51.476	1.4	0.248	1.54	70'	EL	34.423	0.655	1.4	70'	EL	6.885	0.80	0.248	1.20	70'	EL	34.423	
		TNAGT5A	45.000	--	1.128	50.745	1.4	0.248	1.45	70'	EL	34.423	0.655	1.39	70'	EL	6.885	0.80	0.248	1.13	70'	EL	34.423	
		TNAGT5B	45.000	3	1.113	50.088	1.4	0.248	1.43	70'	EL	34.423	0.655	1.33	70'	EL	6.885	0.80	0.248	**1.11**	70'	EL	**34.423**	

LOAD FACTORS:

DESIGN LOAD RATING FACTORS	LIMIT STATE	γ_{DC}	γ_{DW}
	STRENGTH I	1.25	1.50
	SERVICE III	1.00	1.00

NOTES:

MINIMUM RATING FACTORS ARE BASED ON THE STRENGTH I AND SERVICE III LIMIT STATES.

ALLOWABLE STRESSES FOR SERVICE III LIMIT STATE ARE AS REQUIRED FOR DESIGN.

COMMENTS:

1.
2.
3.
4.

(#) CONTROLLING LOAD RATING

(1) DESIGN LOAD RATING (HL-93)
(2) DESIGN LOAD RATING (HS-20)
(3) LEGAL LOAD RATING **

** SEE CHART FOR VEHICLE TYPE

GIRDER LOCATION

I - INTERIOR GIRDER
EL - EXTERIOR LEFT GIRDER
ER - EXTERIOR RIGHT GIRDER

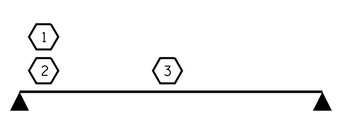

LRFR SUMMARY
FOR SPAN 'A'

PROJECT NO. 17BP.9.R.25
DAVIE COUNTY
STATION: 12+32.00 -L-

DOCUMENT NOT CONSIDERED FINAL UNLESS ALL SIGNATURES COMPLETED

NORTH CAROLINA PROFESSIONAL SEAL 030046 ENGINEER MATTHEW PAYNE
DocuSigned 3/30/2016

STATE OF NORTH CAROLINA
DEPARTMENT OF TRANSPORTATION
RALEIGH

STANDARD
LRFR SUMMARY FOR 70' CORED SLAB UNIT 60° SKEW & 120° SKEW
(NON-INTERSTATE TRAFFIC)

ATKINS
1616 E. MILLBROOK ROAD, SUITE #310
RALEIGH, NORTH CAROLINA 27609
(919) 876-6888 NCBEES #F-0326

ASSEMBLED BY : C. BLAKES DATE : 11/2012
CHECKED BY : M. PAYNE DATE : 03/2016
DRAWN BY : CVC 6/10
CHECKED BY : DNS 6/10

REVISIONS						SHEET NO.
NO.	BY:	DATE:	NO.	BY:	DATE:	S-3
1			3			TOTAL SHEETS
2			4			13

STD. NO. 24LRFR1_60&120S_70L

DocuSign Envelope ID: 63B99F10-5B56-439E-BCE5-B5D5838AF970

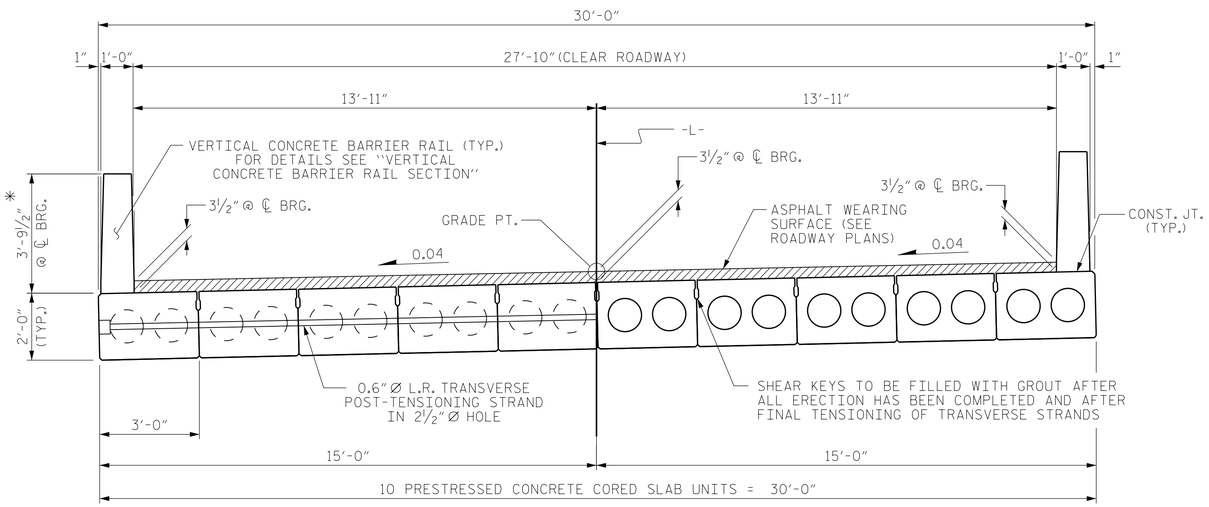

HALF SECTION
AT INTERMEDIATE DIAPHRAGMS

TYPICAL SECTION

HALF SECTION
THROUGH VOIDS

* - THE MAXIMUM BARRIER RAIL HEIGHT AND ASPHALT THICKNESS IS SHOWN. THE HEIGHT OF THE BARRIER RAIL AND ASPHALT THICKNESS VARIES WHILE THE TOP OF THE BARRIER RAIL FOLLOWS THE PROFILE OF THE GUTTERLINE. FOR RAIL HEIGHT DETAILS AND ASPHALT THICKNESS, SEE THE "VERTICAL CONCRETE BARRIER RAIL SECTION" DETAIL.

FIXED END

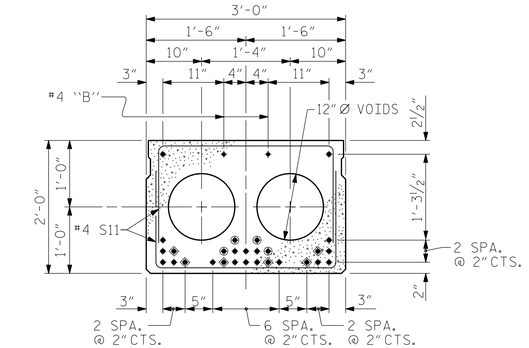

INTERIOR SLAB SECTION (60' & 65' UNIT)
(24 STRANDS REQUIRED)

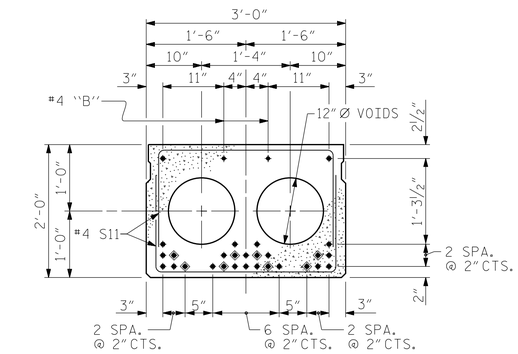

INTERIOR SLAB SECTION (70' UNIT)
(28 STRANDS REQUIRED)

0.6'' Ø LOW RELAXATION STRAND LAYOUT

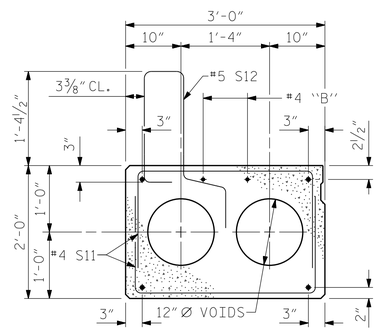

EXTERIOR SLAB SECTION
(FOR PRESTRESSED STRAND LAYOUT, SEE INTERIOR SLAB SECTION.)

◈ BOND SHALL BE BROKEN ON THESE STRANDS FOR A DISTANCE OF 12'-0" FROM END OF CORED SLAB UNIT. SEE STANDARD SPECIFICATIONS, ARTICLE 1078-7.

◉ OPTIONAL FULL LENGTH DEBONDED STRANDS. THESE STRANDS ARE NOT REQUIRED. IF THE FABRICATOR CHOOSES TO INCLUDE THESE STRANDS IN THE CORED SLAB UNIT, THE STRANDS SHALL BE DEBONDED FOR THE FULL LENGTH OF THE UNIT AT NO ADDITIONAL COST. SEE STANDARD SPECIFICATIONS, ARTICLE 1078-7.

DEBONDING LEGEND

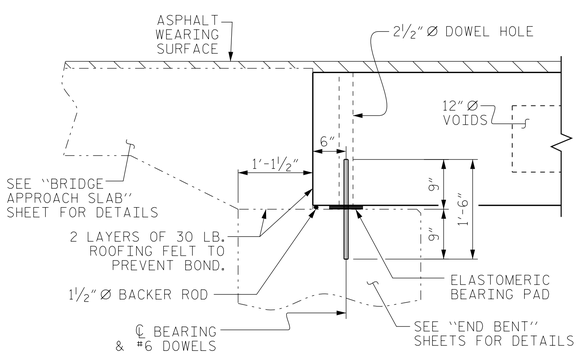

SECTION AT END BENT

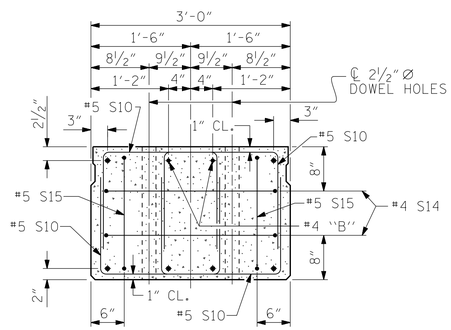

END ELEVATION

SHOWING PLACEMENT OF DOUBLE STIRRUPS AND LOCATION OF DOWEL HOLES. (STRAND LAYOUT NOT SHOWN.) INTERIOR SLAB UNIT SHOWN-EXTERIOR SLAB UNIT SIMILAR EXCEPT SHEAR KEY LOCATION.

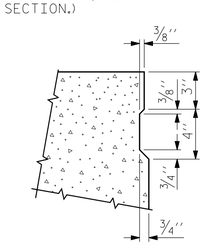

SHEAR KEY DETAIL

NOTE: OMIT SHEAR KEY ON OUTSIDE FACE OF EXTERIOR CORED SLABS.

PROJECT NO. 17BP.9.R.25
DAVIE COUNTY
STATION: 12+32.00 -L-

SHEET 1 OF 3

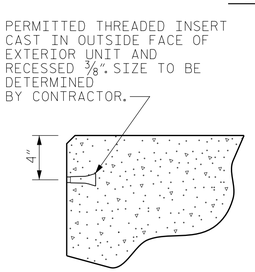

THREADED INSERT DETAIL

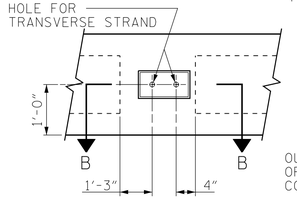

ELEVATION VIEW

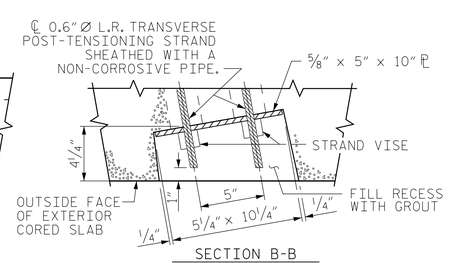

SECTION B-B

GROUTED RECESS AT END OF POST-TENSIONED STRAND CORED SLABS

DOCUMENT NOT CONSIDERED FINAL UNLESS ALL SIGNATURES COMPLETED

NORTH CAROLINA PROFESSIONAL SEAL 030046 ENGINEER MATTHEW PAYNE
DocuSigned by: 3/30/2016

STATE OF NORTH CAROLINA
DEPARTMENT OF TRANSPORTATION
RALEIGH

STANDARD

3'-0'' X 2'-0'' PRESTRESSED CONCRETE CORED SLAB UNIT

ASSEMBLED BY : C. BLAKES	DATE : 11/2012		
CHECKED BY : M. PAYNE	DATE : 03/2016		
DRAWN BY : MAA 6/10	REV. 8/14	MAA/TMG	
CHECKED BY : MKT 7/10			

ATKINS
1616 E. MILLBROOK ROAD, SUITE #310
RALEIGH, NORTH CAROLINA 27609
(919) 876-6888 NCBEES #F-0326

REVISIONS							SHEET NO.
NO.	BY:	DATE:	NO.	BY:	DATE:		S-4
1			3				TOTAL SHEETS
2			4				13

STD. NO. 24PCS4_30_60S

DocuSign Envelope ID: 63B99F10-5B56-439E-BCE5-B5D5838AF970

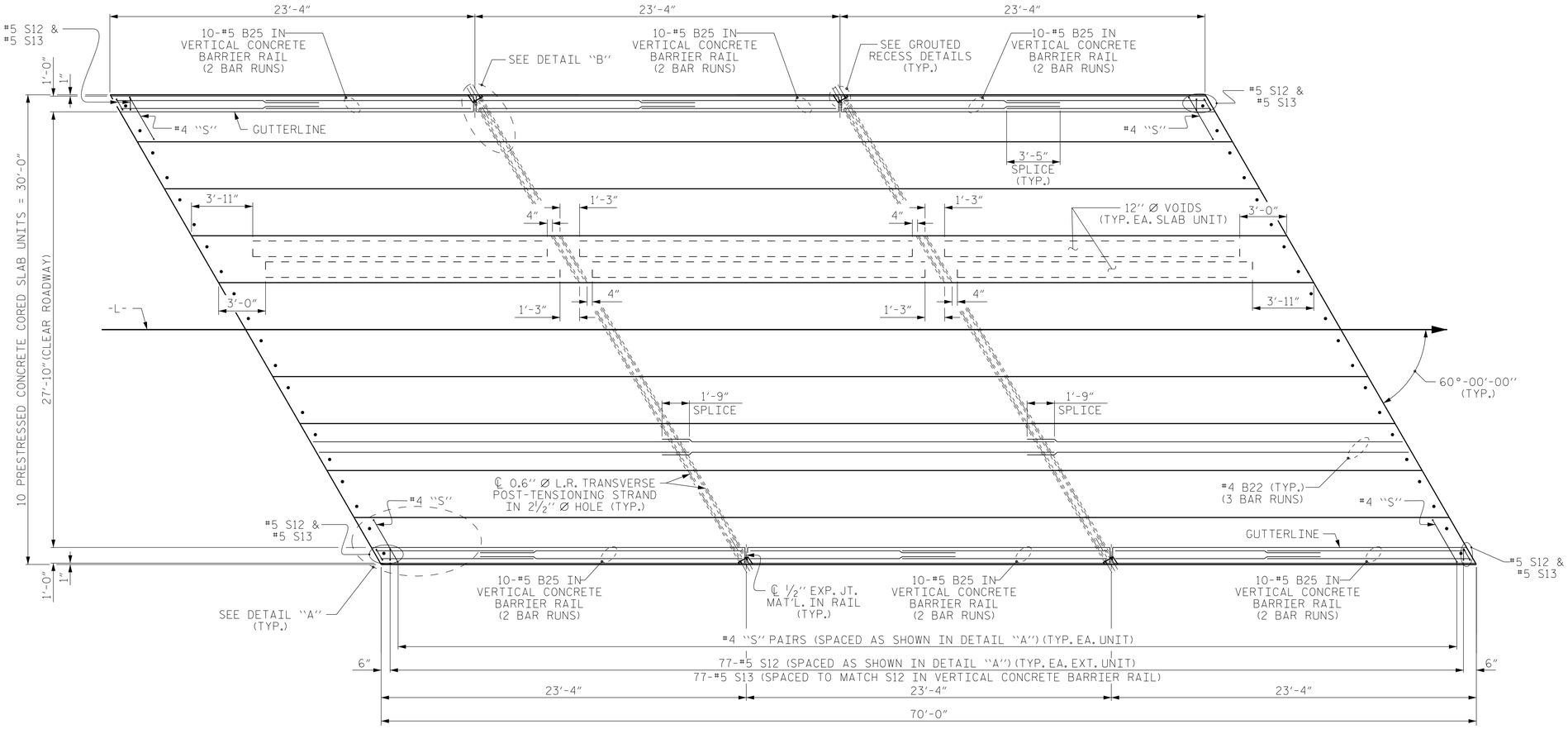

PLAN OF UNIT

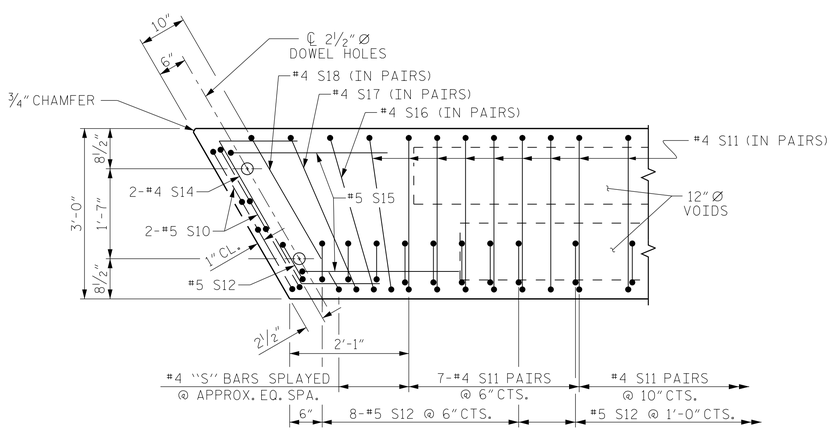

DETAIL "A"

(SIMILAR EACH END OF UNIT)
NOTE: EXTERIOR UNIT SHOWN - INTERIOR UNIT SIMILAR EXCEPT OMIT #5 S12 BARS.

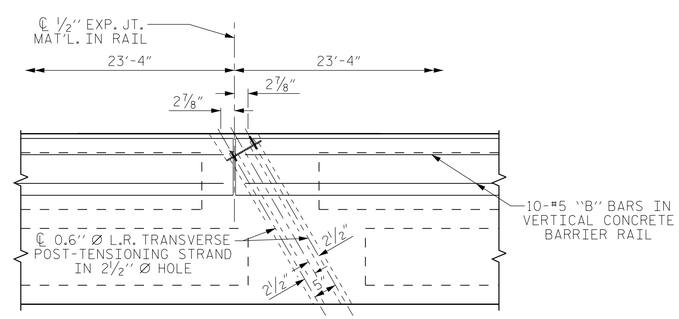

DETAIL "B"

#4 S11 BARS MAY BE SHIFTED AS NECESSARY TO MAINTAIN 1" CLEAR TO GROUTED RECESS AND 2½" Ø TRANSVERSE POST-TENSIONING STRAND HOLES

DOCUMENT NOT CONSIDERED FINAL UNLESS ALL SIGNATURES COMPLETED

NORTH CAROLINA PROFESSIONAL SEAL 030046 ENGINEER MATTHEW PAYNE
DocuSigned by: 3/30/2016

PROJECT NO. 17BP.9.R.25
DAVIE COUNTY
STATION: 12+32.00 -L-

SHEET 2 OF 3

STATE OF NORTH CAROLINA
DEPARTMENT OF TRANSPORTATION
RALEIGH

PLAN OF 70' UNIT
27'-10" CLEAR ROADWAY
60° SKEW

ASSEMBLED BY : C. BLAKES	DATE : 11/2012		
CHECKED BY : M. PAYNE	DATE : 03/2016		
DRAWN BY : MAA 6/10	REV. 12/5/11	MAA/AAC	
CHECKED BY : MKT 7/10	REV. 8/14	MAA/TMC	

ATKINS
1616 E. MILLBROOK ROAD, SUITE #310
RALEIGH, NORTH CAROLINA 27609
(919) 876-6888 NCBEES #F-0326

REVISIONS						SHEET NO.
NO.	BY:	DATE:	NO.	BY:	DATE:	S-5
1			3			TOTAL SHEETS
2			4			13

STD. NO. 24PCS_30_60S_70L

DocuSign Envelope ID: 63B99F10-5B56-439E-BCE5-B5D5838AF970

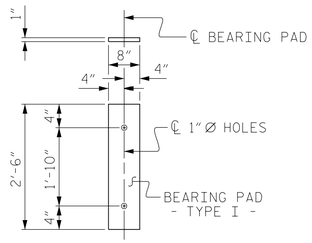

FIXED END
(TYPE I - 20 REQ'D)

ELASTOMERIC BEARING DETAILS

ELASTOMER IN ALL BEARINGS SHALL BE 60 DUROMETER HARDNESS.

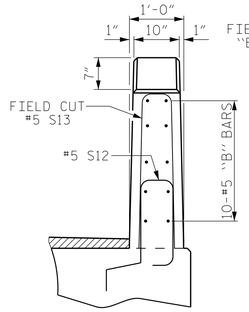

END VIEW

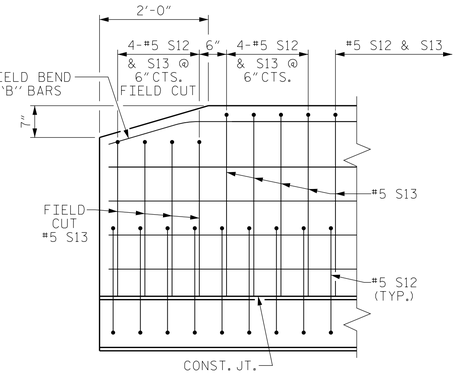

SIDE VIEW

END OF RAIL DETAILS

BAR TYPES

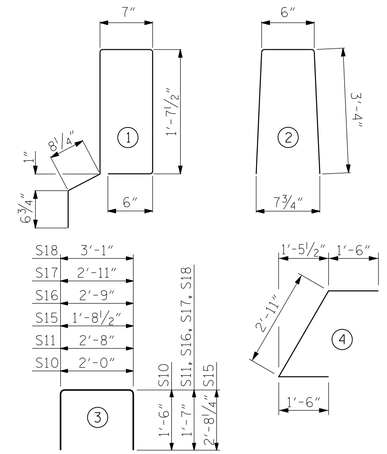

ALL BAR DIMENSIONS ARE OUT TO OUT

NOTES

ALL PRESTRESSING STRANDS SHALL BE 7-WIRE LOW RELAXATION GRADE 270 STRANDS AND SHALL CONFORM TO AASHTO M203 EXCEPT FOR SAMPLING REQUIREMENTS WHICH SHALL BE IN ACCORDANCE WITH THE STANDARD SPECIFICATIONS.

ALL REINFORCING STEEL CAST WITH THE CORED SLAB SECTIONS SHALL BE GRADE 60 AND SHALL BE INCLUDED IN THE UNIT PRICE BID FOR PRESTRESSED CONCRETE CORED SLABS.

RECESSES FOR TRANSVERSE STRANDS SHALL BE GROUTED AFTER THE TENSIONING OF THE STRANDS.

THE 2½"Ø DOWEL HOLES AT FIXED ENDS OF SLAB SECTIONS SHALL BE FILLED WITH NON-SHRINK GROUT.

THE BACKER RODS SHALL CONFORM TO THE REQUIREMENTS OF TYPE M BOND BREAKER. SEE SECTION 1028 OF THE STANDARD SPECIFICATIONS.

WHEN CORED SLABS ARE CAST, AN INTERNAL HOLD-DOWN SYSTEM SHALL BE EMPLOYED TO PREVENT VOIDS FROM RISING OR MOVING SIDEWAYS. AT LEAST SIX WEEKS PRIOR TO CASTING CORED SLABS, THE CONTRACTOR SHALL SUBMIT TO THE ENGINEER FOR REVIEW AND COMMENT, DETAILED DRAWINGS OF THE PROPOSED HOLD-DOWN SYSTEM. IN ADDITION TO STRUCTURAL DETAILS, LOCATION AND SPACING OF THE HOLD-DOWNS SHALL BE INDICATED.

THE TRANSFER OF LOAD FROM THE ANCHORAGES TO THE CORED SLAB UNIT SHALL BE DONE WHEN THE CONCRETE HAS REACHED A COMPRESSIVE STRENGTH OF NOT LESS THAN THE REQUIRED STRENGTH SHOWN IN THE "CONCRETE RELEASE STRENGTH" TABLE.

ALL REINFORCING STEEL IN VERTICAL CONCRETE BARRIER RAILS SHALL BE EPOXY COATED.

PRESTRESSING STRANDS SHALL BE CUT FLUSH WITH THE CORED SLAB UNIT ENDS.

APPLY EPOXY PROTECTIVE COATING TO CORED SLAB UNIT ENDS.

GROOVED CONTRACTION JOINTS, ½" IN DEPTH, SHALL BE TOOLED IN ALL EXPOSED FACES OF THE BARRIER RAIL AND IN ACCORDANCE WITH ARTICLE 825-10(B) OF THE STANDARD SPECIFICATIONS. A CONTRACTION JOINT SHALL BE LOCATED AT EACH THIRD POINT BETWEEN BARRIER RAIL EXPANSION JOINTS. ONLY ONE CONTRACTION JOINT IS REQUIRED AT MIDPOINT OF BARRIER RAIL SEGMENTS LESS THAN 20 FEET IN LENGTH AND NO CONTRACTION JOINTS ARE REQUIRED FOR THOSE SEGMENTS LESS THAN 10 FEET IN LENGTH.

FLAME CUTTING OF THE TRANSVERSE POST-TENSIONING STRAND IS NOT ALLOWED.

MAINTAIN A SYMMETRIC TENSION FORCE BETWEEN EACH PAIR OF TRANSVERSE POST TENSIONING STRANDS IN THE DIAPHRAGM.

THE #4 S11 STIRRUPS MAY BE SHIFTED AS NECESSARY TO MAINTAIN 1" CLEAR TO THE GROUTED RECESS.

FOR GROUT FOR STRUCTURES, SEE SPECIAL PROVISIONS.

THE PERMITTED THREADED INSERTS ARE DETAILED AS AN OPTION FOR THE CONTRACTOR TO ATTACH FALSEWORK AND FORMWORK DURING CONSTRUCTION.

THE PERMITTED THREADED INSERTS IN THE EXTERIOR UNITS SHALL BE SIZED BY THE CONTRACTOR, SPACED AT 4'-0" CENTERS AND GALVANIZED IN ACCORDANCE WITH SECTION 1076 OF THE STANDARD SPECIFICATIONS. STAINLESS STEEL THREADED INSERTS MAY BE USED AS AN ALTERNATE.

THE PERMITTED THREADED INSERTS SHALL BE GROUTED BY THE CONTRACTOR IMMEDIATELY FOLLOWING REMOVAL OF THE FALSEWORK.

THE COST OF THE PERMITTED THREADED INSERTS SHALL BE INCLUDED IN THE PRICE BID FOR THE PRECAST UNITS.

GRADE 270 STRANDS

	0.6"Ø L.R.
AREA (SQUARE INCHES)	0.217
ULTIMATE STRENGTH (LBS. PER STRAND)	58,600
APPLIED PRESTRESS (LBS. PER STRAND)	43,950

BILL OF MATERIAL FOR ONE 70' CORED SLAB UNIT

				EXTERIOR UNIT		INTERIOR UNIT	
BAR	NUMBER	SIZE	TYPE	LENGTH	WEIGHT	LENGTH	WEIGHT
B22	6	#4	STR	24'-6"	98	24'-6"	98
S10	8	#5	3	5'-0"	42	5'-0"	42
S11	170	#4	3	5'-10"	662	5'-10"	662
✳S12	79	#5	1	5'-7"	460		
S14	4	#4	4	5'-11"	16	5'-11"	16
S15	4	#5	3	7'-1"	30	7'-1"	30
S16	4	#4	3	5'-11"	16	5'-11"	16
S17	4	#4	3	6'-1"	16	6'-1"	16
S18	4	#4	3	6'-3"	17	6'-3"	17
REINFORCING STEEL			LBS.		897		897
✳EPOXY COATED REINFORCING STEEL			LBS.		460		
7000 P.S.I. CONCRETE			CU. YDS.		12.0		12.0
0.6"Ø L.R. STRANDS			No.		28		28

BILL OF MATERIAL FOR VERTICAL CONCRETE BARRIER RAIL

BAR	BARS PER PAIR OF EXTERIOR UNITS	TOTAL NO.	SIZE	TYPE	LENGTH	WEIGHT
	70' UNIT					
✳B25	120		#5	STR	13'-8"	1711
✳S13	158		#5	2	7'-2"	1181
✳EPOXY COATED REINFORCING STEEL				LBS.		2892
CLASS AA CONCRETE				CU.YDS.		18.1
TOTAL VERTICAL CONCRETE BARRIER RAIL				LN. FT.		140.29

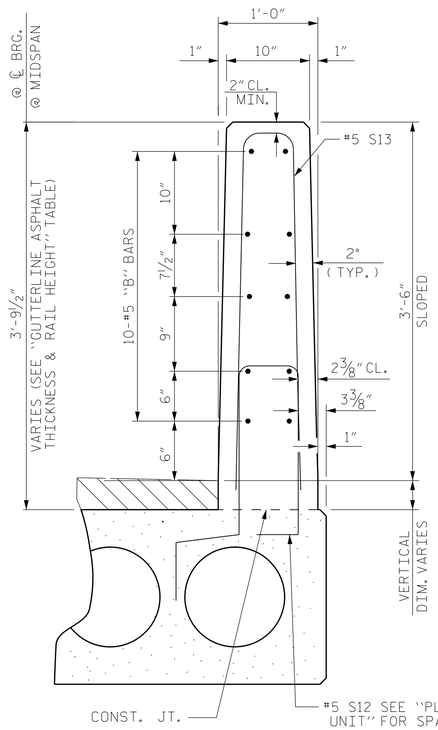

SECTION THRU RAIL

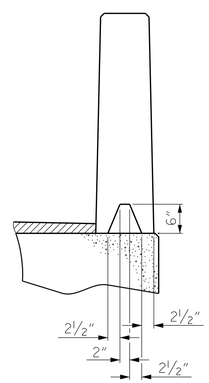

SECTION S-S
AT DAM IN OPEN JOINT
(THIS IS TO BE USED ONLY WHEN SLIP FORM IS USED)

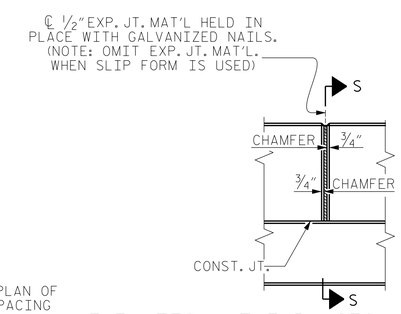

ELEVATION AT EXPANSION JOINTS

DEAD LOAD DEFLECTION AND CAMBER

	3'-0" x 2'-0"
70' CORED SLAB UNIT	0.6"Ø L.R. STRAND
CAMBER (SLAB ALONE IN PLACE)	2¼" ↑
DEFLECTION DUE TO SUPERIMPOSED DEAD LOAD✳✳	¾" ↓
FINAL CAMBER	1½" ↑

✳✳ INCLUDES FUTURE WEARING SURFACE

CONCRETE RELEASE STRENGTH

UNIT	PSI
70' UNITS	5500

CORED SLABS REQUIRED

	NUMBER	LENGTH	TOTAL LENGTH
70' UNIT			
EXTERIOR C.S.	2	70'-0"	140'-0"
INTERIOR C.S.	8	70'-0"	560'-0"
TOTAL			700'-0"

GUTTERLINE ASPHALT THICKNESS & RAIL HEIGHT

	ASPHALT OVERLAY THICKNESS @ MID-SPAN	RAIL HEIGHT @ MID-SPAN
70' UNITS	2"	3'-8"

VERTICAL CONCRETE BARRIER RAIL DETAILS

DOCUMENT NOT CONSIDERED FINAL UNLESS ALL SIGNATURES COMPLETED

NORTH CAROLINA PROFESSIONAL SEAL 030046 ENGINEER MATTHEW PAYNE
DocuSigned by: 3/30/2016

PROJECT NO. 17BP.9.R.25
DAVIE COUNTY
STATION: 12+32.00 -L-

SHEET 3 OF 3

STATE OF NORTH CAROLINA
DEPARTMENT OF TRANSPORTATION
RALEIGH

STANDARD
3'-0" X 2'-0"
PRESTRESSED CONCRETE
CORED SLAB UNIT

ASSEMBLED BY : C. BLAKES	DATE : 11/2012		
CHECKED BY : M. PAYNE	DATE : 03/2016		
DRAWN BY : MAA 6/10	REV. 11/14	MAA/TMG	
CHECKED BY : MKT 7/10			

ATKINS
1616 E. MILLBROOK ROAD, SUITE #310
RALEIGH, NORTH CAROLINA 27609
(919) 876-6888 NCBEES #F-0326

REVISIONS						SHEET NO.
NO.	BY:	DATE:	NO.	BY:	DATE:	S-6
1			3			TOTAL SHEETS
2			4			13

STD. NO. 24PCS3_30_60&120S

DocuSign Envelope ID: 63B99F10-5B56-439E-BCE5-B5D5838AF970

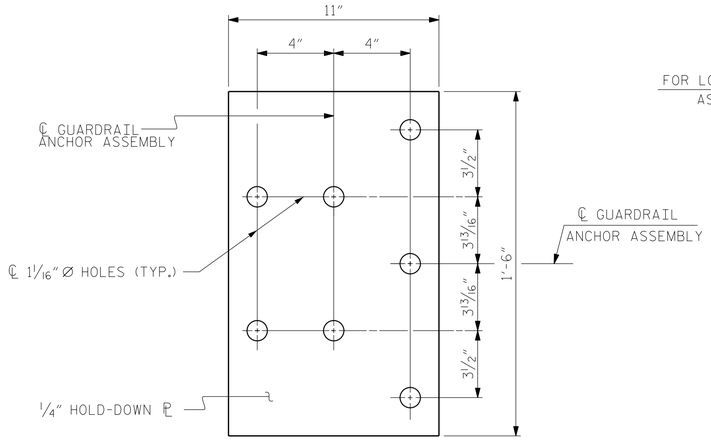

PLAN

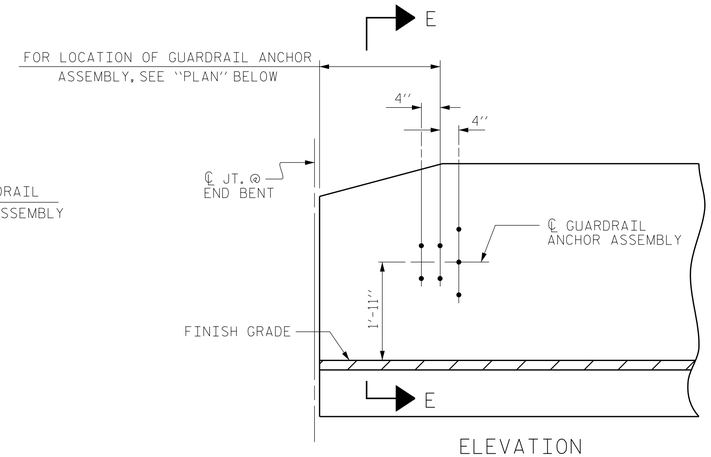

ELEVATION

NOTES

THE GUARDRAIL ANCHOR ASSEMBLY SHALL CONSIST OF A 1/4" HOLD DOWN PLATE AND 7 - 7/8" Ø BOLTS WITH NUTS AND WASHERS.

THE HOLD-DOWN PLATE SHALL CONFORM TO AASHTO M270 GRADE 36. AFTER FABRICATION, THE HOLD-DOWN PLATE SHALL BE HOT-DIP GALVANIZED IN ACCORDANCE WITH AASHTO M111.

BOLTS SHALL CONFORM TO THE REQUIREMENTS OF ASTM A307 AND NUTS SHALL CONFORM TO THE REQUIREMENTS OF AASHTO M291. BOLTS, NUTS AND WASHERS SHALL BE GALVANIZED. (AT THE CONTRACTOR'S OPTION, STAINLESS STEEL BOLTS, NUTS AND WASHERS MAY BE USED AS AN ALTERNATE FOR THE 7/8" Ø GALVANIZED BOLTS, NUTS AND WASHERS. THEY SHALL CONFORM TO OR EXCEED THE MECHANICAL REQUIREMENTS OF ASTM A307. THE USE OF THIS ALTERNATE SHALL BE APPROVED BY THE ENGINEER.)

THE GUARDRAIL ANCHOR ASSEMBLY IS REQUIRED AT ALL POINTS WHERE APPROACH GUARDRAIL IS TO BE ATTACHED TO THE END OF BARRIER RAIL. FOR POINTS OF ATTACHMENT, SEE SKETCH.

AFTER INSTALLATION, THE EXPOSED THREAD OF THE BOLT SHALL BE BURRED WITH A SHARP POINTED TOOL.

THE COST OF THE GUARDRAIL ANCHOR ASSEMBLY SHALL BE INCLUDED IN THE UNIT CONTRACT PRICE BID FOR VERTICAL CONCRETE BARRIER RAIL.

THE VERTICAL REINFORCING BARS MAY BE SHIFTED SLIGHTLY IN THE VERTICAL CONCRETE BARRIER RAIL TO CLEAR ASSEMBLY BOLTS.

THE 1 1/4" Ø HOLES SHALL BE FORMED OR DRILLED WITH A CORE BIT. IMPACT TOOLS WILL NOT BE PERMITTED. ANY CONCRETE DAMAGED BY THIS WORK SHALL BE REPAIRED TO THE SATISFACTION OF THE ENGINEER.

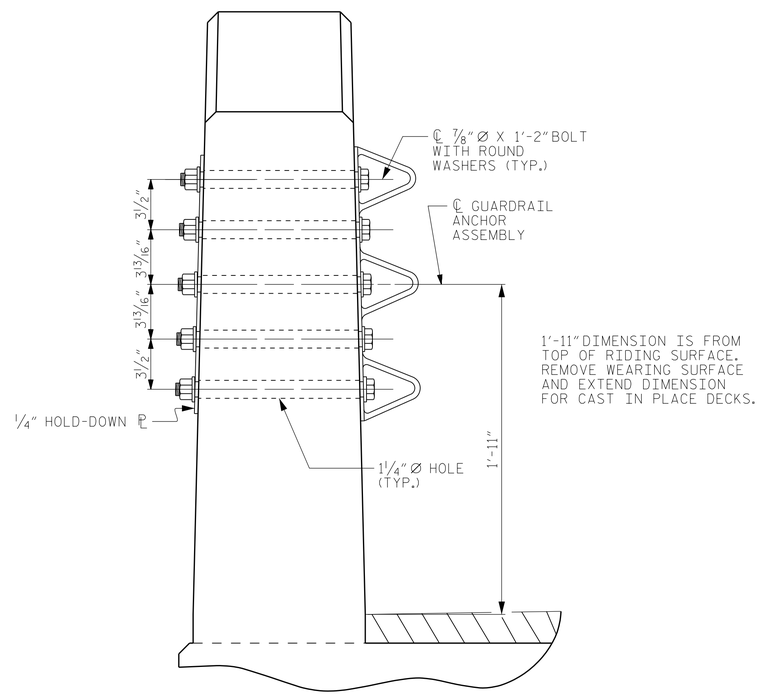

SECTION E-E

GUARDRAIL ANCHOR ASSEMBLY DETAILS

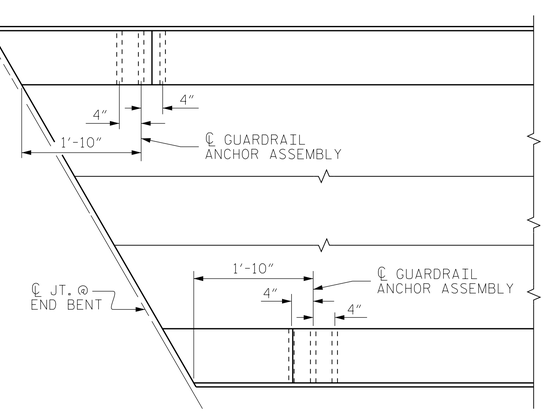

PLAN

LOCATION OF ANCHORS FOR GUARDRAIL

END BENT #1 SHOWN, END BENT #2 SIMILAR.

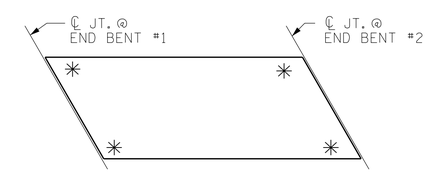

SKETCH SHOWING POINTS OF ATTACHMENT

✳ DENOTES GUARDRAIL ANCHOR ASSEMBLY

PROJECT NO. 17BP.9.R.25
DAVIE COUNTY
STATION: 12+32.00 -L-

DOCUMENT NOT CONSIDERED FINAL UNLESS ALL SIGNATURES COMPLETED

NORTH CAROLINA PROFESSIONAL SEAL 030046 ENGINEER MATTHEW PAYNE
DocuSigned by: 3/30/2016

ATKINS
1616 E. MILLBROOK ROAD, SUITE #310
RALEIGH, NORTH CAROLINA 27609
(919) 876-6888 NCBEES #F-0326

STATE OF NORTH CAROLINA
DEPARTMENT OF TRANSPORTATION
RALEIGH

STANDARD
GUARDRAIL ANCHORAGE DETAILS FOR VERTICAL CONCRETE BARRIER RAIL

REVISIONS							SHEET NO.
NO.	BY:	DATE:	NO.	BY:	DATE:		S-7
1			3				TOTAL SHEETS
2			4				13

ASSEMBLED BY : C. BLAKES		DATE :	11/2012
CHECKED BY : M. PAYNE		DATE :	03/2016
DRAWN BY : MAA 5/10	REV. 12/5/11		MAA/GM
CHECKED BY : GM 5/10	REV. 6/13		MAA/GM
	REV. 1/15		MAA/TMG

(SHT 1b) STD. NO. GRA3

DocuSign Envelope ID: 63B99F10-5B56-439E-BCE5-B5D5838AF970

NOTES

STIRRUPS IN CAP MAY BE SHIFTED AS NECESSARY TO CLEAR DOWELS.

THE CONCRETE IN THE SHADED AREA OF THE WING SHALL BE POURED AFTER THE VERTICAL CONCRETE BARRIER RAIL IS CAST IF SLIP FORMING IS USED.

FOR PILE SPLICE DETAILS, SEE SHEET 4 OF 4.

FOR WING DETAILS, SEE SHEET 3 OF 4.

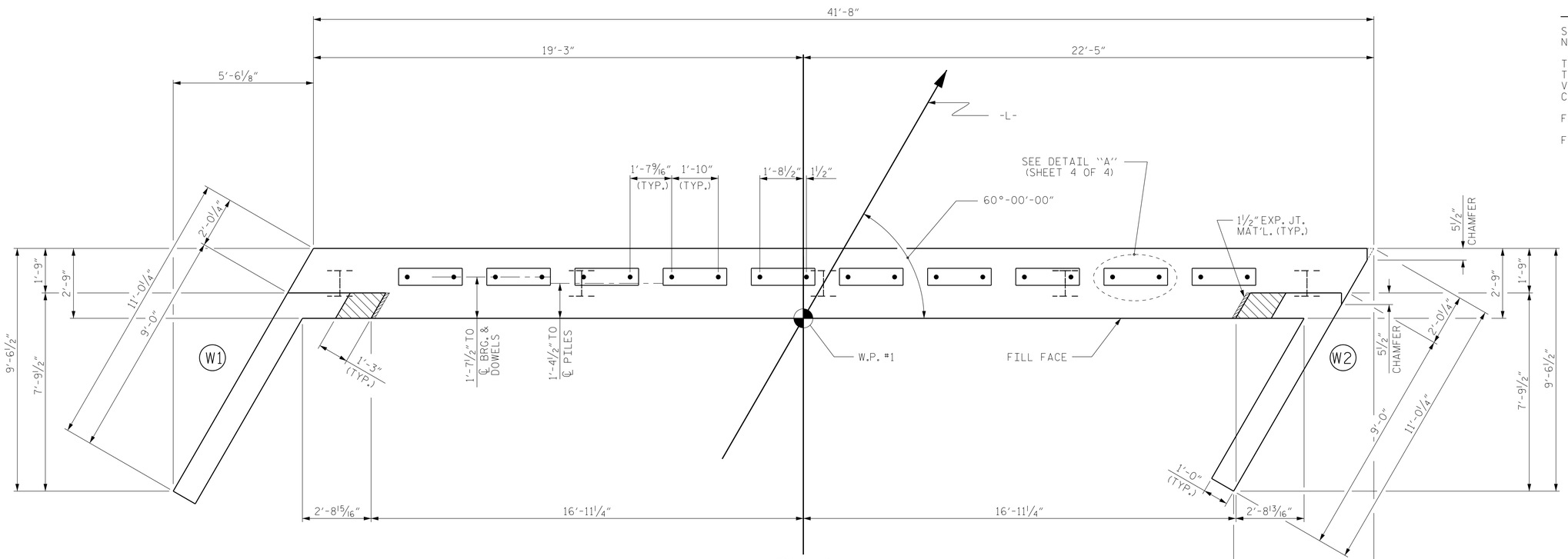

PLAN

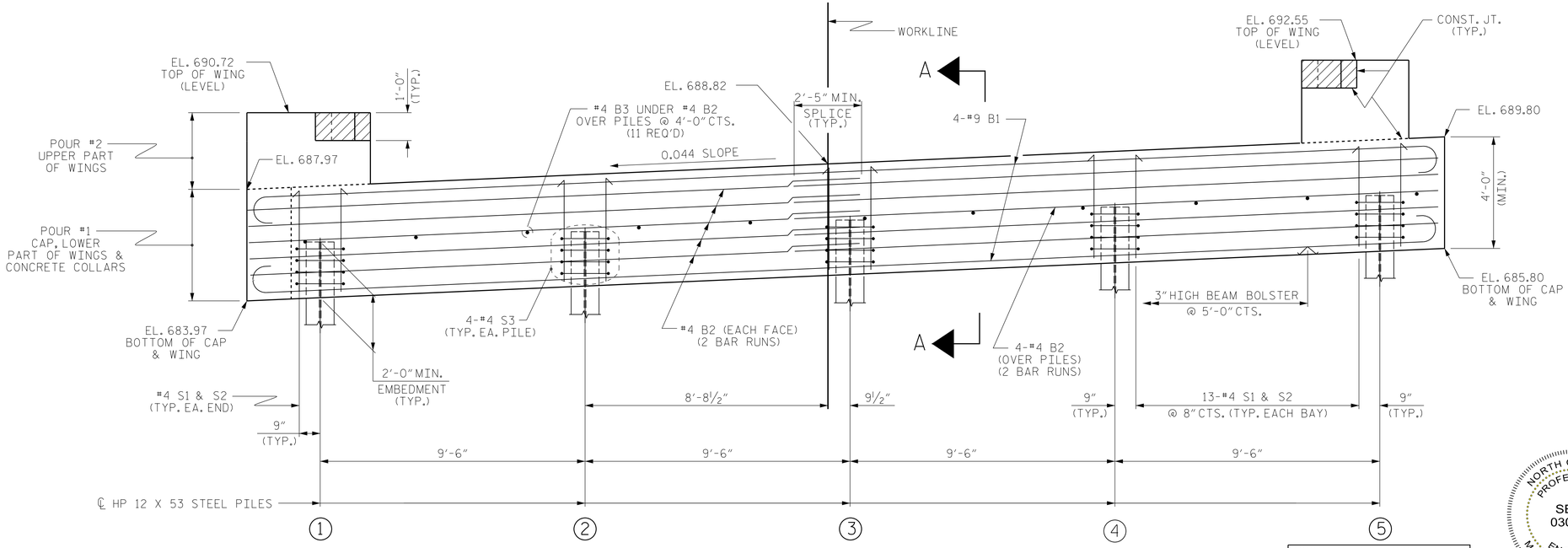

ELEVATION

TOP OF PILE ELEVATIONS	
1	686.01
2	686.43
3	686.85
4	687.27
5	687.69

PROJECT NO. 17BP.9.R.25

DAVIE COUNTY

STATION: 12+32.00 -L-

SHEET 1 OF 4

STATE OF NORTH CAROLINA
DEPARTMENT OF TRANSPORTATION
RALEIGH

SUBSTRUCTURE

END BENT No. 1

NORTH CAROLINA PROFESSIONAL SEAL 030046 ENGINEER MATTHEW PAYNE
DocuSigned by: 3/30/2016

DOCUMENT NOT CONSIDERED FINAL UNLESS ALL SIGNATURES COMPLETED

WINGS NOT SHOWN FOR CLARITY.
FOR SECTION A-A, SEE SHEET 4 OF 4.
CONCRETE COLLARS FOR STEEL PILES NOT SHOWN IN PLAN AND ELEVATION VIEWS FOR CLARITY.
SEE "CORROSION PROTECTION FOR STEEL PILES DETAIL", SHEET 4 OF 4.

ASSEMBLED BY : C. BLAKES	DATE : 11/2012		
CHECKED BY : M. PAYNE	DATE : 03/2016		
DRAWN BY : WJH	12/11	REV. 4/15	MAA/TMG
CHECKED BY : AAC	12/11		

ATKINS
1616 E. MILLBROOK ROAD, SUITE #310
RALEIGH, NORTH CAROLINA 27609
(919) 876-6888 NCBEES #F-0326

REVISIONS								SHEET NO.
NO.	BY:	DATE:	NO.	BY:	DATE:			S-8
1			3					TOTAL SHEETS
2			4					13

STD. NO. EB_30_60S4

DocuSign Envelope ID: 63B99F10-5B56-439E-BCE5-B5D5838AF970

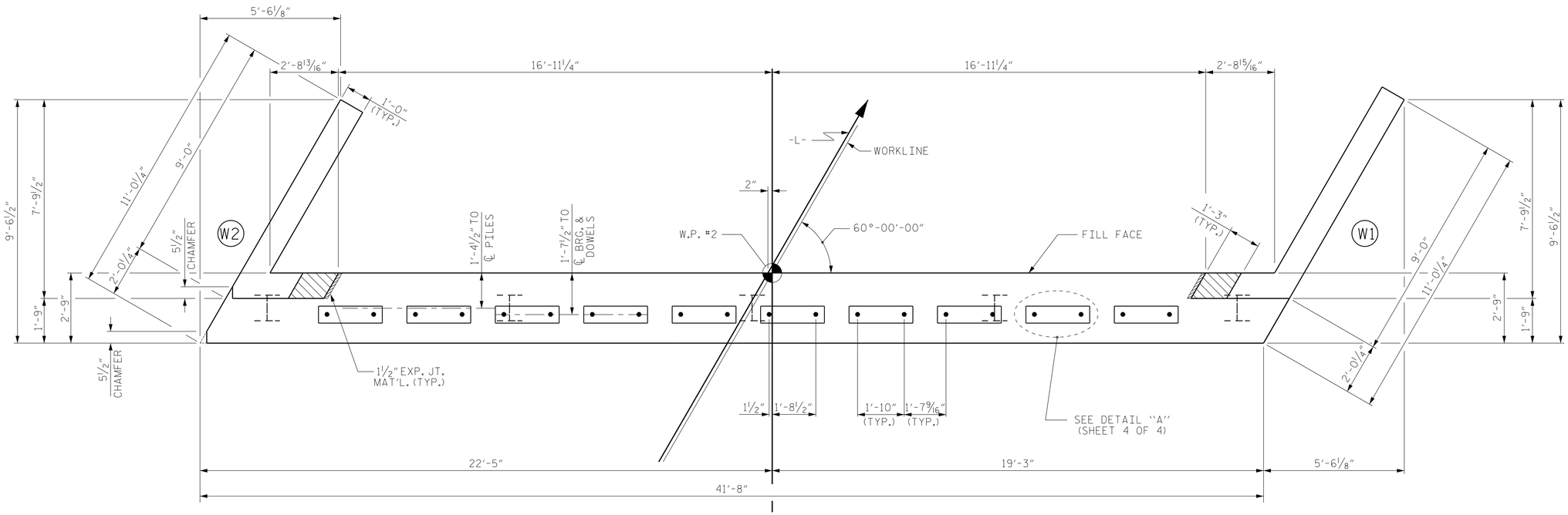

PLAN

NOTES

STIRRUPS IN CAP MAY BE SHIFTED AS NECESSARY TO CLEAR DOWELS.

THE CONCRETE IN THE SHADED AREA OF THE WING SHALL BE POURED AFTER THE VERTICAL CONCRETE BARRIER RAIL IS CAST IF SLIP FORMING IS USED.

FOR PILE SPLICE DETAILS, SEE SHEET 4 OF 4.

FOR WING DETAILS, SEE SHEET 3 OF 4.

TOP OF PILE ELEVATIONS	
1	687.53
2	688.02
3	688.52
4	689.01
5	689.51

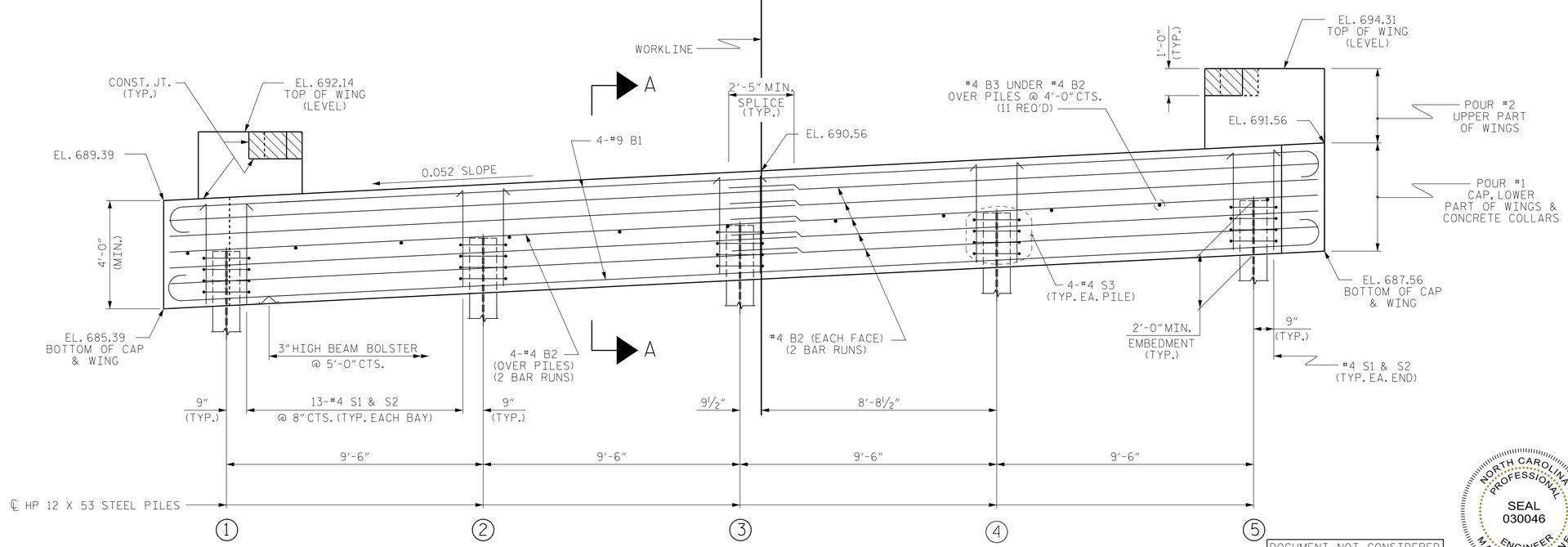

ELEVATION

WINGS NOT SHOWN FOR CLARITY.
FOR SECTION A-A, SEE SHEET 4 OF 4.
CONCRETE COLLARS FOR STEEL PILES NOT SHOWN IN PLAN AND ELEVATION VIEWS FOR CLARITY.
SEE "CORROSION PROTECTION FOR STEEL PILES DETAIL", SHEET 4 OF 4.

DOCUMENT NOT CONSIDERED FINAL UNLESS ALL SIGNATURES COMPLETED

NORTH CAROLINA PROFESSIONAL SEAL 030046 ENGINEER MATTHEW PAYNE
DocuSigned by: Matthew Payne 3/30/2016

PROJECT NO. 17BP.9.R.25
DAVIE COUNTY
STATION: 12+32.00 -L-

SHEET 2 OF 4

STATE OF NORTH CAROLINA
DEPARTMENT OF TRANSPORTATION
RALEIGH

SUBSTRUCTURE
END BENT No. 2

ASSEMBLED BY : C. BLAKES	DATE : 11/2012		
CHECKED BY : M.PAYNE	DATE : 03/2016		
DRAWN BY : WJH 12/11	REV. 4/15	MAA/TMG	
CHECKED BY : AAC 12/11			

ATKINS
1616 E. MILLBROOK ROAD, SUITE #310
RALEIGH, NORTH CAROLINA 27609
(919) 876-6888 NCBEES #F-0326

REVISIONS						SHEET NO.
NO.	BY:	DATE:	NO.	BY:	DATE:	S-9
1			3			TOTAL SHEETS
2			4			13

STD. NO. EB_30_60S4

DocuSign Envelope ID: 63B99F10-5B56-439E-BCE5-B5D5838AF970

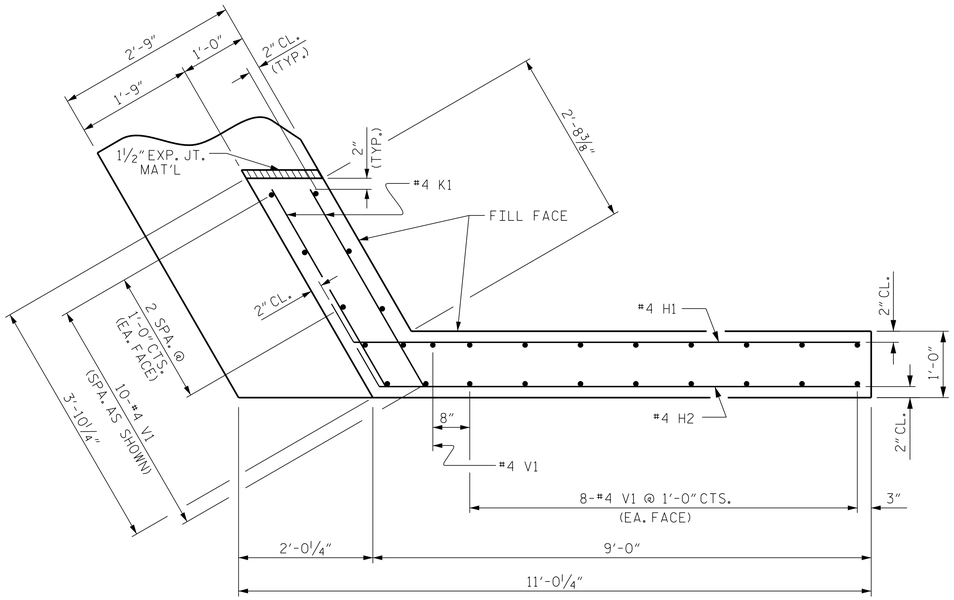

PLAN OF WING (W1)

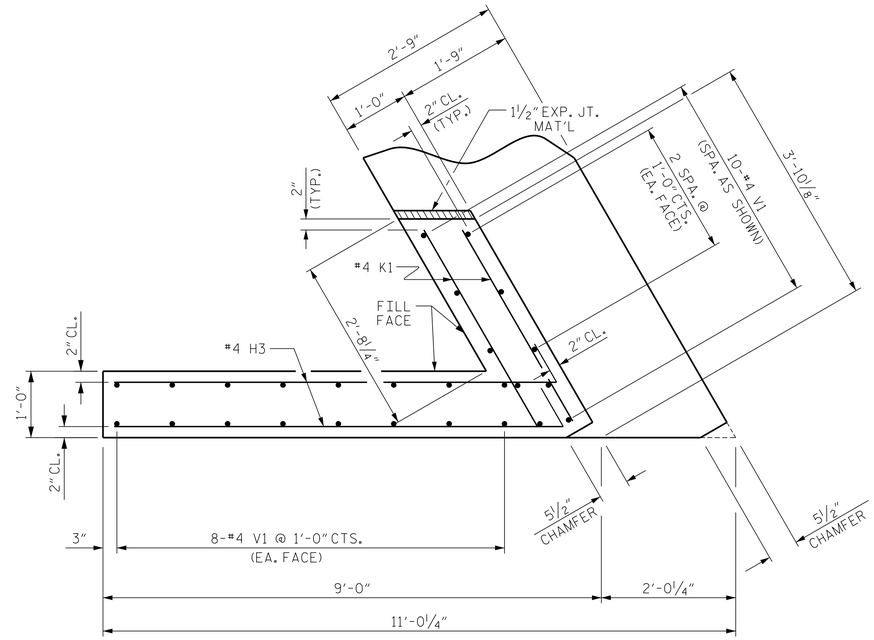

PLAN OF WING (W2)

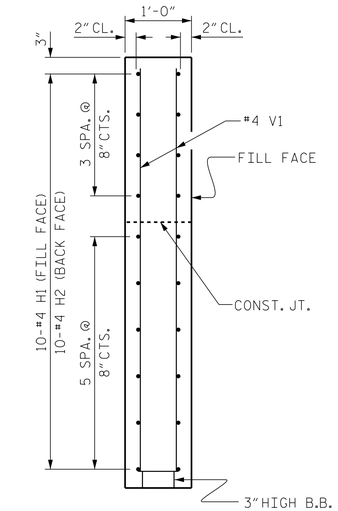

SECTION X-X

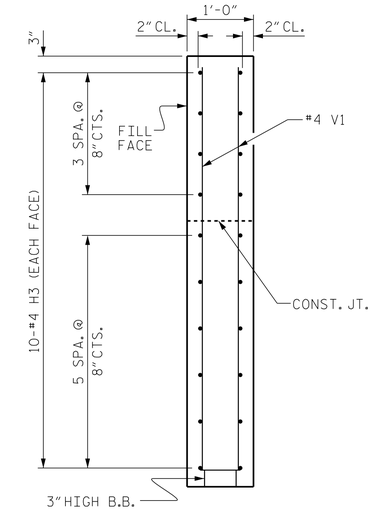

SECTION Y-Y

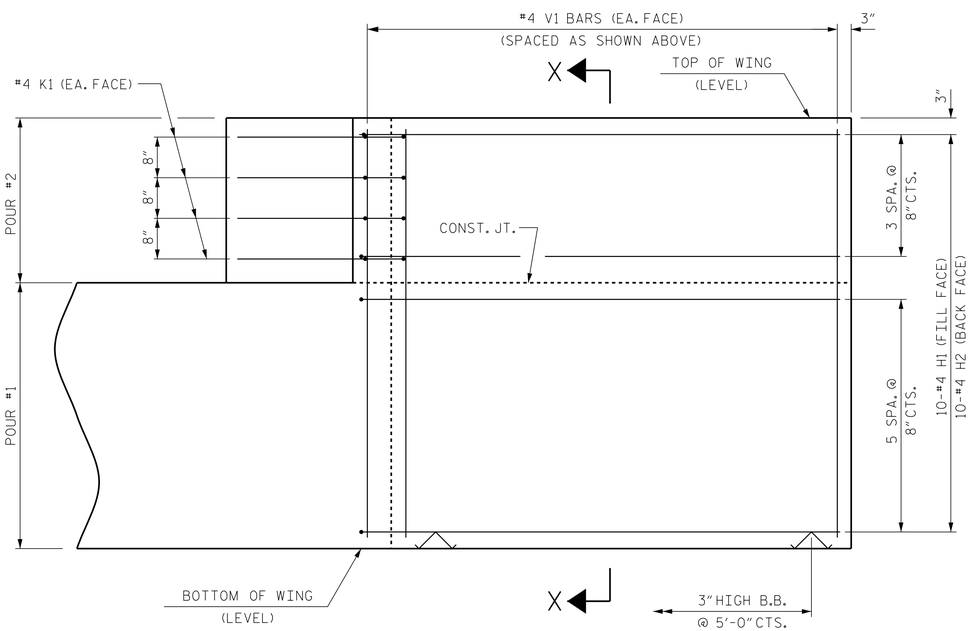

ELEVATION OF WING (W1)

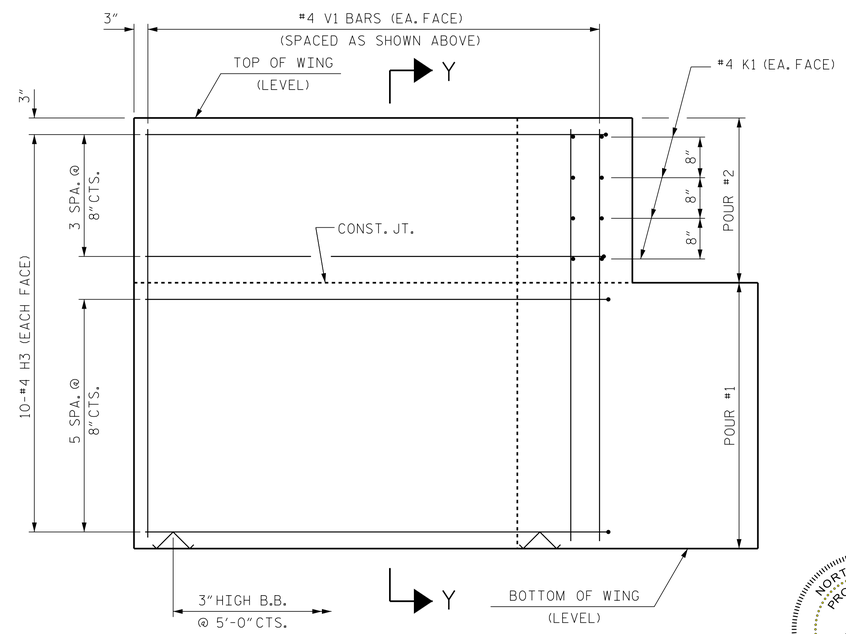

ELEVATION OF WING (W2)

WING DETAILS

DOCUMENT NOT CONSIDERED FINAL UNLESS ALL SIGNATURES COMPLETED

PROJECT NO. 17BP.9.R.25

DAVIE COUNTY

STATION: 12+32.00 -L-

NORTH CAROLINA PROFESSIONAL SEAL 030046 ENGINEER MATTHEW PAYNE

DocuSigned by: 3/30/2016

STATE OF NORTH CAROLINA
DEPARTMENT OF TRANSPORTATION
RALEIGH

SUBSTRUCTURE
END BENT
WING DETAILS

ASSEMBLED BY : C. BLAKES DATE : 11/2012
CHECKED BY : M. PAYNE DATE : 03/2016
DRAWN BY : WJH 12/11
CHECKED BY : AAC 12/11
REV. 4/15 MAA/TMG

ATKINS 1616 E. MILLBROOK ROAD, SUITE #310 RALEIGH, NORTH CAROLINA 27609 (919) 876-6888 NCBEES #F-0326

REVISIONS						
NO.	BY:	DATE:	NO.	BY:	DATE:	
1			3			
2			4			

SHEET NO. S-10
TOTAL SHEETS 13

STD. NO. EB_30_60S4

DocuSign Envelope ID: 63B99F10-5B56-439E-BCE5-B5D5838AF970

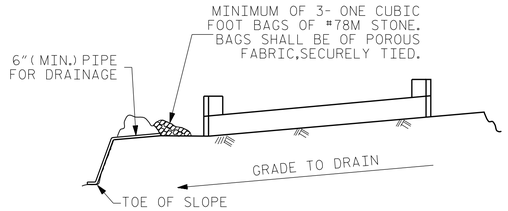

BAGGED STONE AND PIPE SHALL BE PLACED IMMEDIATELY AFTER COMPLETION OF END BENT EXCAVATION. PIPE MAY BE EITHER CONCRETE, CORRUGATED STEEL, CORRUGATED ALUMINUM ALLOY, OR CORRUGATED PLASTIC. PERFORATED PIPE WILL NOT BE ALLOWED.

BAGGED STONE SHALL REMAIN IN PLACE UNTIL THE ENGINEER DIRECTS THAT IT BE REMOVED. THE CONTRACTOR SHALL REMOVE AND DISPOSE OF SILT ACCUMULATIONS AT BAGGED STONE WHEN SO DIRECTED BY THE ENGINEER. BAGS SHALL BE REMOVED AND REPLACED WHENEVER THE ENGINEER DETERMINES THAT THEY HAVE DETERIORATED AND LOST THEIR EFFECTIVENESS.

NO SEPARATE PAYMENT WILL BE MADE FOR THIS WORK AND THE ENTIRE COST OF THIS WORK SHALL BE INCLUDED IN THE UNIT CONTRACT PRICE BID FOR THE SEVERAL PAY ITEMS.

TEMPORARY DRAINAGE AT END BENT

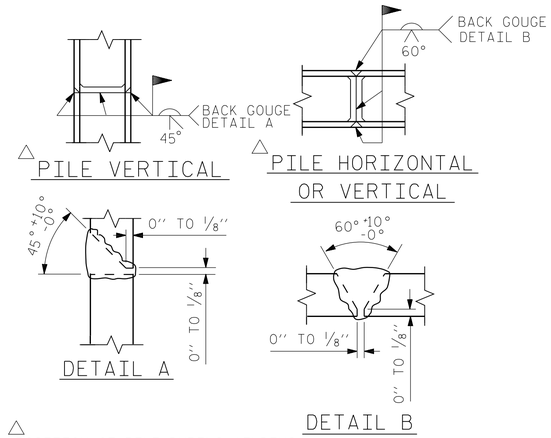

△ POSITION OF PILE DURING WELDING.

PILE SPLICE DETAILS

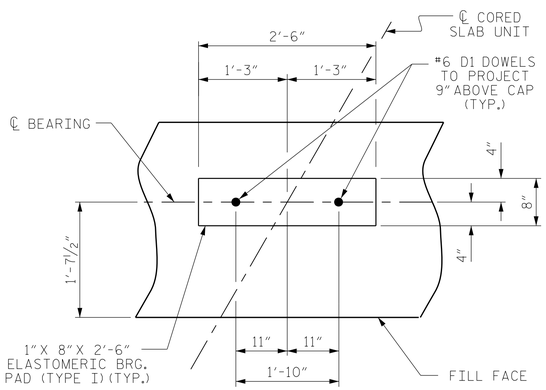

DETAIL "A"

(END BENT No. 1 SHOWN, END BENT No. 2 SIMILAR BY ROTATION)

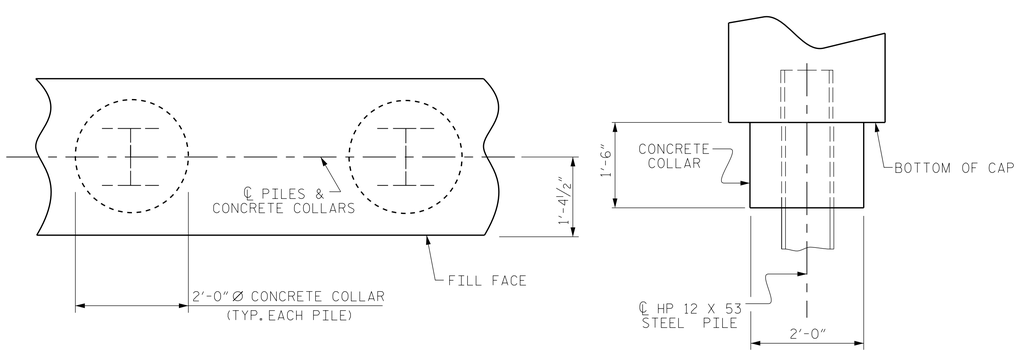

CORROSION PROTECTION FOR STEEL PILES DETAIL

(END BENT No. 1 SHOWN, END BENT No. 2 SIMILAR BY ROTATION)

BAR TYPES

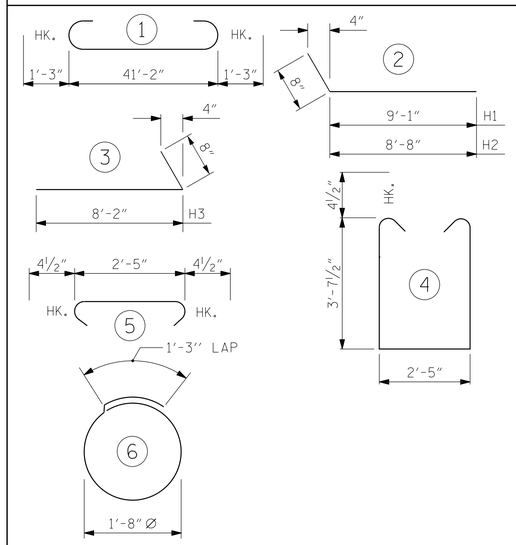

ALL BAR DIMENSIONS ARE OUT TO OUT.

END BENT No. 1	END BENT No. 2
HP 12 X 53 STEEL PILES	HP 12 X 53 STEEL PILES
NO: 5 LIN. FT.= 75.0	NO: 5 LIN. FT.= 75.0

BILL OF MATERIAL FOR ONE END BENT

BAR	NO.	SIZE	TYPE	LENGTH	WEIGHT
B1	8	#9	1	43'-8"	1188
B2	28	#4	STR	21'-11"	410
B3	11	#4	STR	2'-5"	18
D1	20	#6	STR	1'-6"	45
H1	10	#4	2	9'-9"	65
H2	10	#4	2	9'-4"	62
H3	20	#4	3	8'-10"	118
K1	16	#4	STR	3'-3"	35
S1	54	#4	4	10'-5"	376
S2	54	#4	5	3'-2"	114
S3	20	#4	6	6'-6"	87
V1	53	#4	STR	6'-2"	218

REINFORCING STEEL (FOR ONE END BENT) 2736 LBS.

CLASS A CONCRETE BREAKDOWN (FOR ONE END BENT)

POUR #1 CAP, LOWER PART OF WINGS & COLLARS 20.2 C.Y.

POUR #2 UPPER PART OF WINGS 2.4 C.Y.

TOTAL CLASS A CONCRETE 22.6 C.Y.

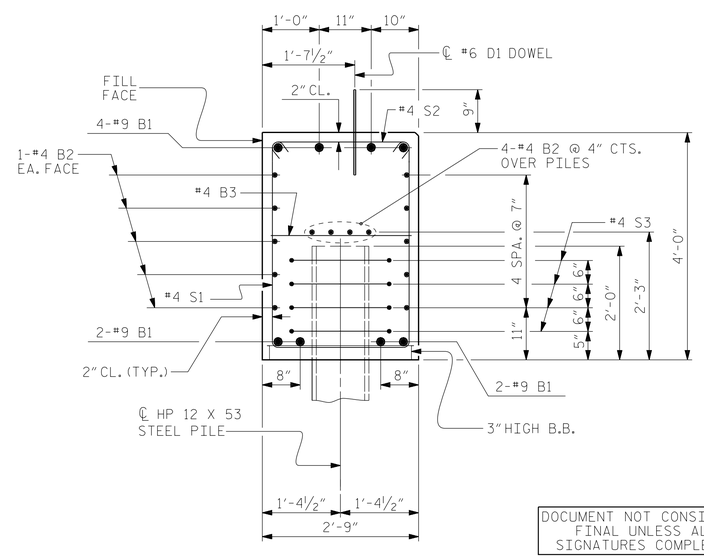

SECTION A-A

(CONCRETE COLLAR NOT SHOWN FOR CLARITY. SEE "CORROSION PROTECTION FOR STEEL PILES DETAIL.")

DOCUMENT NOT CONSIDERED FINAL UNLESS ALL SIGNATURES COMPLETED

NORTH CAROLINA PROFESSIONAL SEAL 030046 ENGINEER MATTHEW PAYNE

DocuSigned by: 3/30/2016

PROJECT NO. 17BP.9.R.25

DAVIE COUNTY

STATION: 12+32.00 -L-

STATE OF NORTH CAROLINA
DEPARTMENT OF TRANSPORTATION
RALEIGH

SUBSTRUCTURE

END BENT No. 1 & 2 DETAILS

ASSEMBLED BY : C. BLAKES DATE : 11/2012
CHECKED BY : M. PAYNE DATE : 03/2016
DRAWN BY : WJH 12/11
CHECKED BY : AAC 12/11

ATKINS 1616 E. MILLBROOK ROAD, SUITE #310 RALEIGH, NORTH CAROLINA 27609 (919) 876-6888 NCBEES #F-0326

REVISIONS						
NO.	BY:	DATE:	NO.	BY:	DATE:	
1			3			
2			4			

SHEET NO. S-11
TOTAL SHEETS 13

STD. NO. EB_30_60S4

DocuSign Envelope ID: 63B99F10-5B56-439E-BCE5-B5D5838AF970

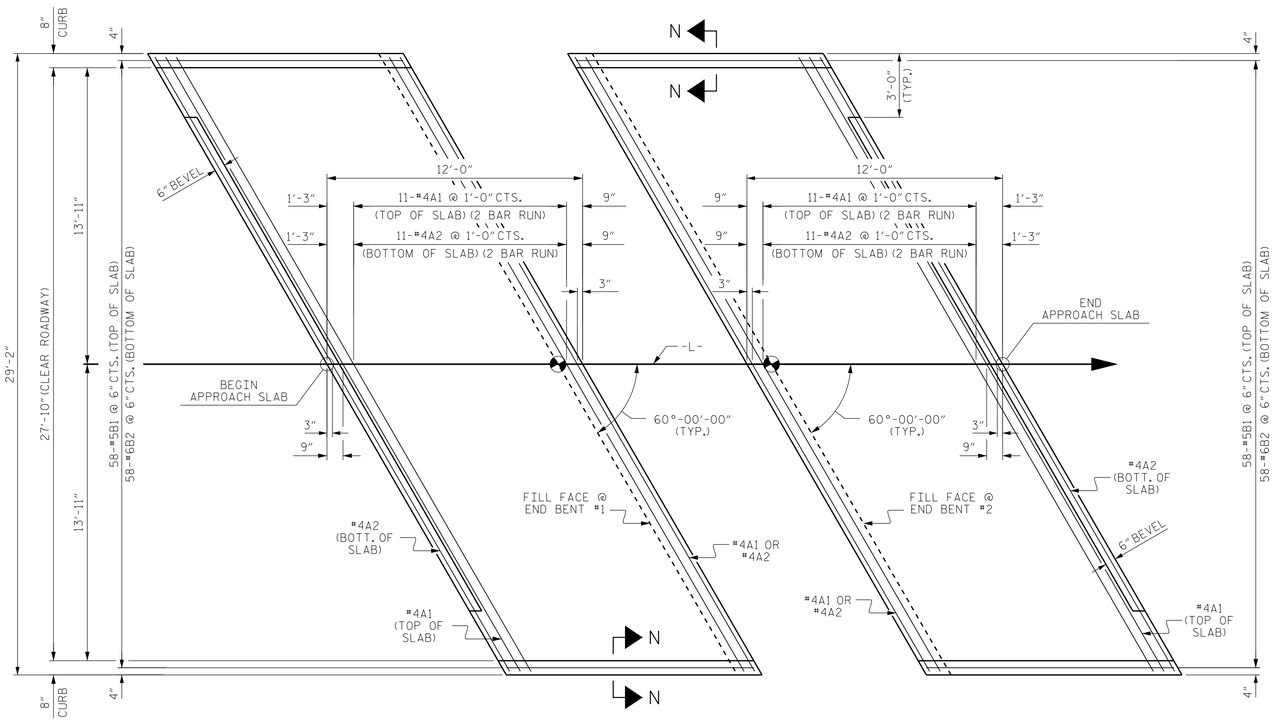

PLAN @ END BENT #1 PLAN @ END BENT #2

DIMENSIONS SHOWN ARE TYPICAL FOR BOTH APPROACH SLABS

NOTES

FOR BRIDGE APPROACH FILL INCLUDING GEOTEXTILE, 4"Ø DRAINAGE PIPE, AND #78M STONE BACKFILL, SEE ROADWAY PLANS.

GEOTEXTILE SHALL BE TYPE 1IN ACCORDANCE WITH THE STANDARD SPECIFICATIONS SECTION 1056.

#78M STONE BACKFILL (CLASS V SELECT MATERIAL) SHALL BE IN ACCORDANCE WITH STANDARD SPECIFICATIONS SECTION 1016.

#78M STONE BACKFILL IS TO BE CONTINUOUS ALONG FILL FACE OF BACKWALL FROM OUTSIDE EDGE TO OUTSIDE EDGE OF APPROACH SLAB.

FOR THE 4"Ø DRAINAGE PIPE OUTLET(S), SEE ROADWAY STANDARD DRAWINGS.

AREA BETWEEN THE WINGWALL AND APPROACH SLAB SHALL BE GRADED TO DRAIN THE WATER AWAY FROM THE FILL FACE OF THE BRIDGE AND SHALL BE PAVED. SEE ROADWAY PLANS.

APPROACH SLAB GROOVING IS NOT REQUIRED.

BILL OF MATERIAL

APPROACH SLAB AT EB #1

BAR	NO.	SIZE	TYPE	LENGTH	WEIGHT
* A1	26	#4	STR	17'-8"	307
A2	26	#4	STR	17'-7"	305
* B1	58	#5	STR	11'-1"	670
B2	58	#6	STR	11'-7"	1009
REINFORCING STEEL				LBS.	1314
* EPOXY COATED REINFORCING STEEL				LBS.	977
CLASS AA CONCRETE				C.Y.	18.0

APPROACH SLAB AT EB #2

BAR	NO.	SIZE	TYPE	LENGTH	WEIGHT
* A1	26	#4	STR	17'-8"	307
A2	26	#4	STR	17'-7"	305
* B1	58	#5	STR	11'-1"	670
B2	58	#6	STR	11'-7"	1009
REINFORCING STEEL				LBS.	1314
* EPOXY COATED REINFORCING STEEL				LBS.	977
CLASS AA CONCRETE				C.Y.	18.0

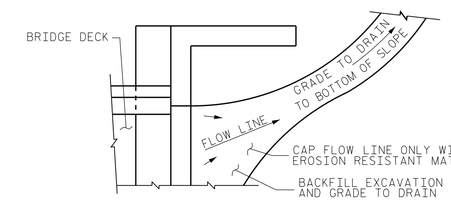

NOTE: IF THE APPROACH SLAB IS NOT CONSTRUCTED IMMEDIATELY AFTER THE BACKFILLING OF THE END BENT EXCAVATION, GRADE TO DRAIN TO THE BOTTOM OF THE SLOPE AND PROVIDE EROSION RESISTANT MATERIAL, SUCH AS FIBERGLASS ROVING OR AS DIRECTED BY THE ENGINEER TO PREVENT SOIL EROSION AND TO PROTECT THE AREA ADJACENT TO THE STRUCTURE. THE CONTRACTOR WILL BE REQUIRED TO REMOVE THESE MATERIALS PRIOR TO CONSTRUCTION OF THE APPROACH SLAB.

TEMPORARY DRAINAGE DETAIL

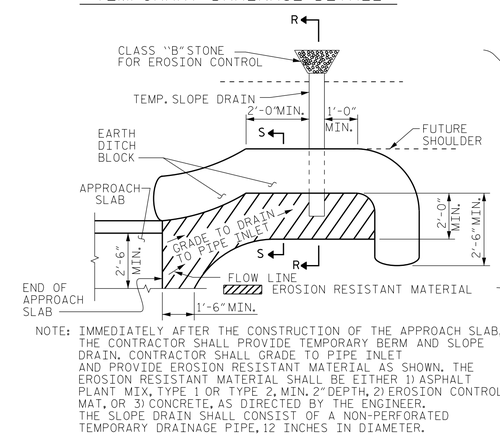

NOTE: IMMEDIATELY AFTER THE CONSTRUCTION OF THE APPROACH SLAB, THE CONTRACTOR SHALL PROVIDE TEMPORARY BERM AND SLOPE DRAIN. CONTRACTOR SHALL GRADE TO PIPE INLET AND PROVIDE EROSION RESISTANT MATERIAL AS SHOWN. THE EROSION RESISTANT MATERIAL SHALL BE EITHER 1) ASPHALT PLANT MIX, TYPE 1 OR TYPE 2, MIN. 2" DEPTH, 2) EROSION CONTROL MAT, OR 3) CONCRETE, AS DIRECTED BY THE ENGINEER. THE SLOPE DRAIN SHALL CONSIST OF A NON-PERFORATED TEMPORARY DRAINAGE PIPE, 12 INCHES IN DIAMETER.

PLAN VIEW

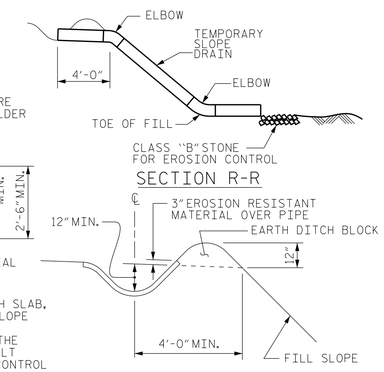

SECTION R-R

SECTION S-S

TEMPORARY BERM AND SLOPE DRAIN DETAILS

(TO BE USED WHEN SHOULDER BERM GUTTER IS REQUIRED)

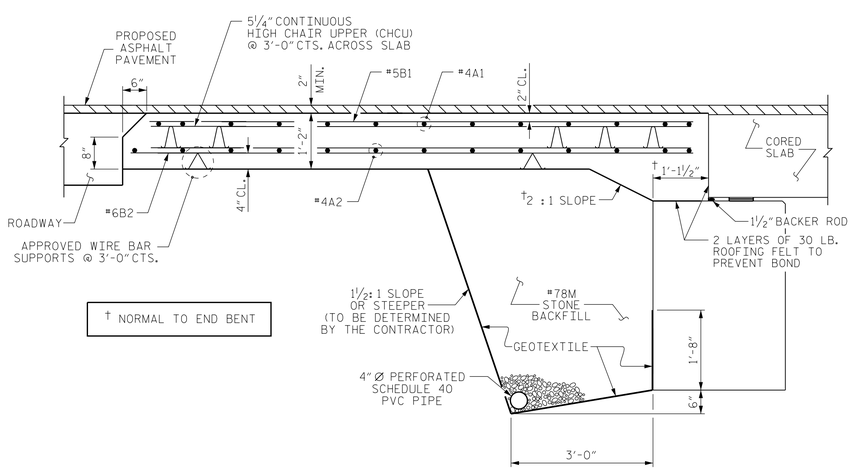

† NORMAL TO END BENT

SECTION THRU SLAB

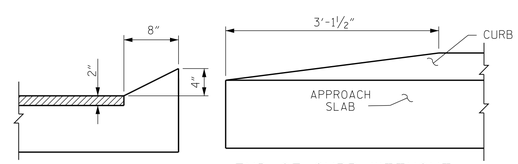

SECTION N-N END OF CURB WITHOUT SHOULDER BERM GUTTER

CURB DETAILS

SPLICE LENGTHS		
BAR SIZE	EPOXY COATED	UNCOATED
#4	2'-0"	1'-9"
#5	2'-6"	2'-2"
#6	3'-10"	2'-7"

DOCUMENT NOT CONSIDERED FINAL UNLESS ALL SIGNATURES COMPLETED

NORTH CAROLINA PROFESSIONAL SEAL 030046 ENGINEER MATTHEW PAYNE

DocuSigned by: 3/30/2016

PROJECT NO. 17BP.9.R.25

DAVIE COUNTY

STATION: 12+32.00 -L-

STATE OF NORTH CAROLINA
DEPARTMENT OF TRANSPORTATION
RALEIGH

STANDARD
BRIDGE APPROACH SLAB
FOR PRESTRESSED CONCRETE
CORED SLAB UNIT
(SUB-REGIONAL TIER)
60° SKEW

ASSEMBLED BY : C. BLAKES DATE : 11/2012
CHECKED BY : M. PAYNE DATE : 03/2016
DRAWN BY : SHS/MAA 5-09
CHECKED BY : BCH 5-09
REV. 9-15 MAA/TMG

ATKINS 1616 E. MILLBROOK ROAD, SUITE #310 RALEIGH, NORTH CAROLINA 27609 (919) 876-6888 NCBEES #F-0326

REVISIONS						
NO.	BY:	DATE:	NO.	BY:	DATE:	
1			3			
2			4			

SHEET NO. S-12
TOTAL SHEETS 13

STD. NO. BAS_30_60S

DocuSign Envelope ID: 63B99F10-5B56-439E-BCE5-B5D5838AF970

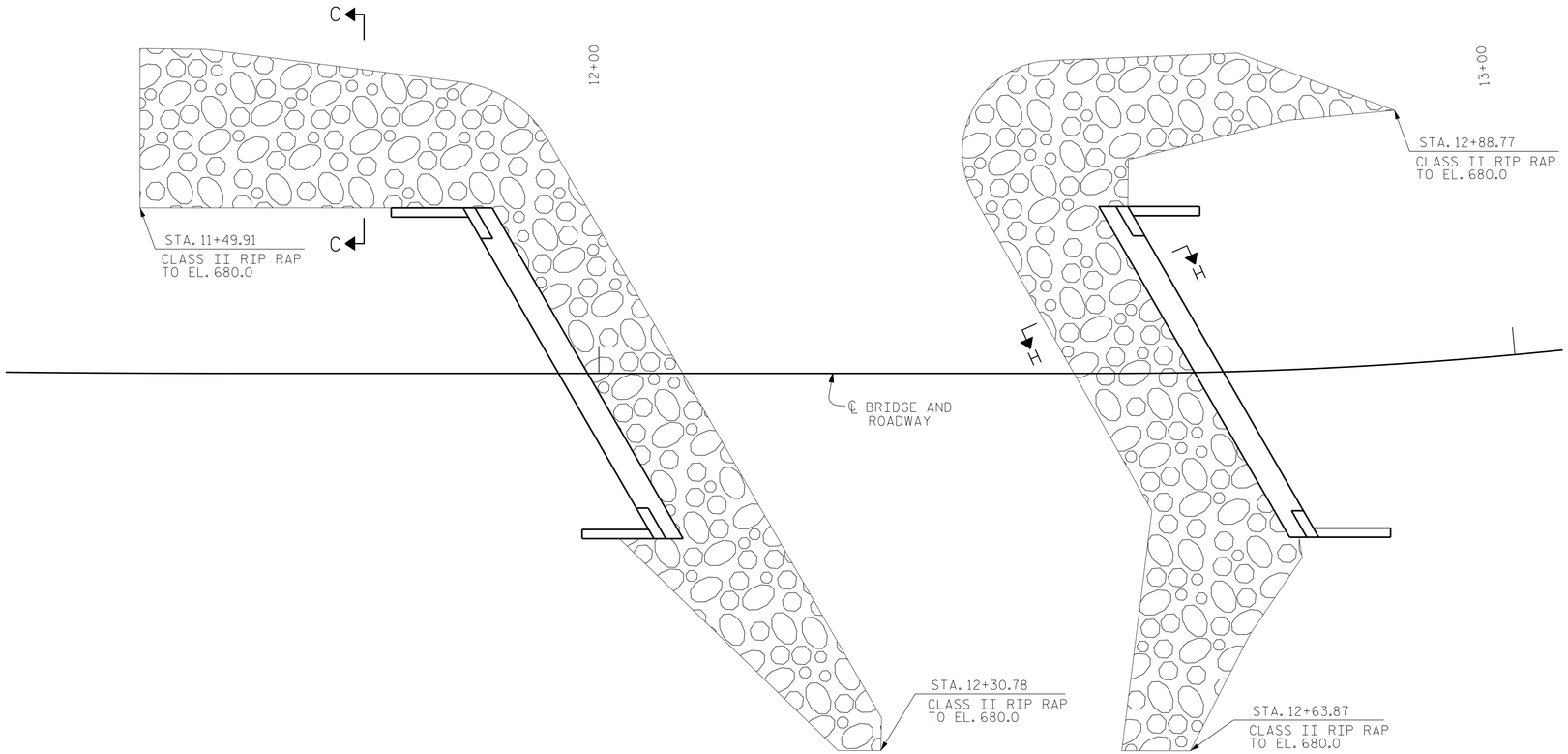

ESTIMATED QUANTITIES		
BRIDGE @ STA. 12+32.00 -L-	RIP RAP CLASS II (2'-0" THICK)	GEOTEXTILE FOR DRAINAGE
	TONS	SQUARE YARDS
END BENT 1	268	297
END BENT 2	233	258

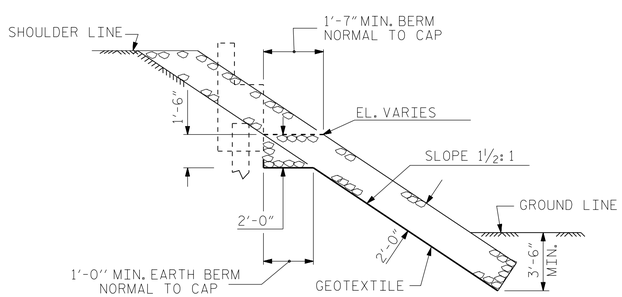

SECTION H-H

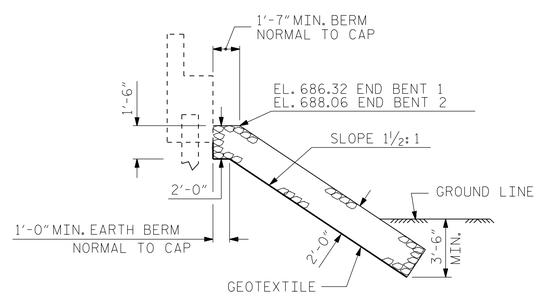

℄ SECTION
BERM RIP RAPPED

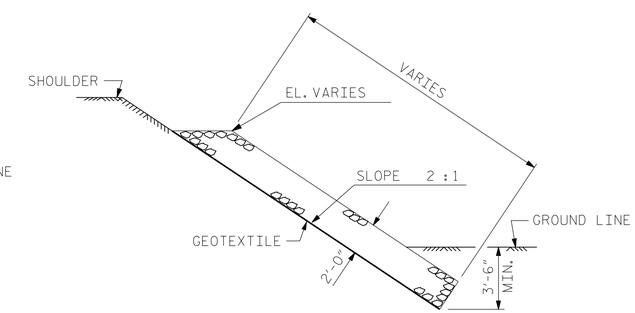

SECTION C-C

PROJECT NO. 17BP.9.R.25
DAVIE COUNTY
STATION: 12+32.00 -L-

DOCUMENT NOT CONSIDERED FINAL UNLESS ALL SIGNATURES COMPLETED

NORTH CAROLINA PROFESSIONAL SEAL 030046 ENGINEER MATTHEW PAYNE
DocuSigned by: 3/30/2016

STATE OF NORTH CAROLINA
DEPARTMENT OF TRANSPORTATION
RALEIGH

STANDARD

RIP RAP DETAILS

ATKINS
1616 E. MILLBROOK ROAD, SUITE #310
RALEIGH, NORTH CAROLINA 27609
(919) 876-6888 NCBEES #F-0326

REVISIONS						SHEET NO.
NO.	BY:	DATE:	NO.	BY:	DATE:	S-13
1			3			TOTAL SHEETS
2			4			13

DRAWN BY : C. BLAKES DATE : 11/2012
CHECKED BY : M. PAYNE DATE : 03/2016

DocuSign Envelope ID: 63B99F10-5B56-439E-BCE5-B5D5838AF970

STANDARD NOTES

DESIGN DATA:

SPECIFICATIONS	A.A.S.H.T.O. (CURRENT)
LIVE LOAD	SEE PLANS
IMPACT ALLOWANCE	SEE A.A.S.H.T.O.
STRESS IN EXTREME FIBER OF	
STRUCTURAL STEEL - AASHTO M270 GRADE 36	20,000 LBS. PER SQ. IN.
- AASHTO M270 GRADE 50W	27,000 LBS. PER SQ. IN.
- AASHTO M270 GRADE 50	27,000 LBS. PER SQ. IN.
REINFORCING STEEL IN TENSION	
GRADE 60	24,000 LBS. PER SQ. IN.
CONCRETE IN COMPRESSION	1,200 LBS. PER SQ. IN.
CONCRETE IN SHEAR	SEE A.A.S.H.T.O.
STRUCTURAL TIMBER - TREATED OR	
UNTREATED - EXTREME FIBER STRESS	1,800 LBS. PER SQ. IN.
COMPRESSION PERPENDICULAR TO GRAIN OF TIMBER	375 LBS. PER SQ. IN.
EQUIVALENT FLUID PRESSURE OF EARTH	30 LBS. PER CU. FT. (MINIMUM)

MATERIAL AND WORKMANSHIP:

EXCEPT AS MAY OTHERWISE BE SPECIFIED ON PLANS OR IN THE SPECIAL PROVISIONS, ALL MATERIAL AND WORKMANSHIP SHALL BE IN ACCORDANCE WITH THE 2012 "STANDARD SPECIFICATIONS FOR ROADS AND STRUCTURES" OF THE N. C. DEPARTMENT OF TRANSPORTATION.

STEEL SHEET PILING FOR PERMANENT OR TEMPORARY APPLICATIONS SHALL BE HOT ROLLED.

CONCRETE:

UNLESS OTHERWISE REQUIRED ON PLANS, CLASS A CONCRETE SHALL BE USED FOR ALL PORTIONS OF ALL STRUCTURES WITH THE EXCEPTION THAT: CLASS AA CONCRETE SHALL BE USED IN BRIDGE SUPERSTRUCTURES, ABUTMENT BACKWALLS, AND APPROACH SLABS; AND CLASS B CONCRETE SHALL BE USED FOR SLOPE PROTECTION AND RIP RAP.

CONCRETE CHAMFERS:

UNLESS OTHERWISE NOTED ON THE PLANS, ALL EXPOSED CORNERS ON STRUCTURES SHALL BE CHAMFERED 3/4" WITH THE FOLLOWING EXCEPTIONS: TOP CORNERS OF CURBS MAY BE ROUNDED TO 1-1/2" RADIUS WHICH IS BUILT INTO CURB FORMS; CORNERS OF TRANSVERSE FLOOR EXPANSION JOINTS SHALL BE ROUNDED WITH A 1/4" FINISHING TOOL UNLESS OTHERWISE REQUIRED ON PLANS; AND CORNERS OF EXPANSION JOINTS IN THE ROADWAY FACES AND TOPS OF CURBS AND SIDEWALKS SHALL BE ROUNDED TO A 1/4" RADIUS WITH A FINISHING STONE OR TOOL UNLESS OTHERWISE REQUIRED ON PLANS.

DOWELS:

DOWELS WHEN INDICATED ON PLANS AS FOR CULVERT EXTENSIONS, SHALL BE EMBEDDED AT LEAST 12" INTO THE OLD CONCRETE AND GROUTED INTO PLACE WITH 1:2 CEMENT MORTAR.

ALLOWANCE FOR DEAD LOAD DEFLECTION, SETTLEMENT, ETC. IN CASTING SUPERSTRUCTURES:

BRIDGES SHALL BE BUILT ON THE GRADE OR VERTICAL CURVE SHOWN ON PLANS. SLABS, CURBS AND PARAPETS SHALL CONFORM TO THE GRADE OR CURVE.

ALL DIMENSIONS WHICH ARE GIVEN IN SECTION AND ARE AFFECTED BY DEAD LOAD DEFLECTIONS ARE DIMENSIONS AT CENTER LINE OF BEARING UNLESS OTHERWISE NOTED ON PLANS. IN SETTING FORMS FOR STEEL BEAM BRIDGES AND PRESTRESSED CONCRETE GIRDER BRIDGES, ADJUSTMENTS SHALL BE MADE DUE TO THE DEAD LOAD DEFLECTIONS FOR THE ELEVATIONS SHOWN. WHERE BLOCKS ARE SHOWN OVER BEAMS FOR BUILDING UP TO THE SLAB, THE VERTICAL DIMENSIONS OF THE BLOCKS SHALL BE ADJUSTED BETWEEN BEARINGS TO COMPENSATE FOR DEAD LOAD DEFLECTIONS, VERTICAL CURVE ORDINATE, AND ACTUAL BEAM CAMBER. WHERE BOTTOM OF SLAB IS IN LINE WITH BOTTOM OF TOP FLANGES, DEPTH OF SLAB BETWEEN BEARINGS SHALL BE ADJUSTED TO COMPENSATE FOR DEAD LOAD DEFLECTION, VERTICAL CURVE ORDINATE, AND ACTUAL BEAM CAMBER.

IN SETTING FALSEWORK AND FORMS FOR REINFORCED CONCRETE SPANS, AN ALLOWANCE SHALL BE MADE FOR DEAD LOAD DEFLECTIONS, SETTLEMENT OF FALSEWORK, AND PERMANENT CAMBER WHICH SHALL BE PROVIDED FOR IN ADDITION TO THE ELEVATIONS SHOWN. AFTER REMOVAL OF THE FALSEWORK, THE FINISHED STRUCTURES SHALL CONFORM TO THE PROFILE AND ELEVATIONS SHOWN ON THE PLANS AND CONSTRUCTION ELEVATIONS FURNISHED BY THE ENGINEER.

DETAILED DRAWINGS FOR FALSEWORK OR FORMS FOR BRIDGE SUPERSTRUCTURE AND ANY STRUCTURE OR PARTS OF A STRUCTURE AS NOTED ON THE PLANS SHALL BE SUBMITTED TO THE ENGINEER FOR APPROVAL BEFORE CONSTRUCTION OF THE FALSEWORK OR FORMS IS STARTED.

REINFORCING STEEL:

ALL REINFORCING STEEL SHALL BE DEFORMED. DIMENSIONS RELATIVE TO PLACEMENT OF REINFORCING ARE TO CENTERS OF BARS UNLESS OTHERWISE INDICATED IN THE PLANS. DIMENSIONS ON BAR DETAILS ARE TO CENTERS OF BARS OR ARE OUT TO OUT AS INDICATED ON PLANS.

WIRE BAR SUPPORTS SHALL BE PROVIDED FOR REINFORCING STEEL WHERE INDICATED ON THE PLANS. WHEN BAR SUPPORT PIECES ARE PLACED IN CONTINUOUS LINES, THEY SHALL BE SO PLACED THAT THE ENDS OF THE SUPPORTING WIRES SHALL BE LAPPED TO LOCK LEGS ON ADJOINING PIECES.

STRUCTURAL STEEL:

AT THE CONTRACTOR'S OPTION, HE MAY SUBSTITUTE 7/8" Ø SHEAR STUDS FOR THE ¾" Ø STUDS SPECIFIED ON THE PLANS. THIS SUBSTITUTION SHALL BE MADE AT THE RATE OF 3 - 7/8" Ø STUDS FOR 4 - 3/4" Ø STUDS, AND STUD SPACING CHANGES SHALL BE MADE AS NECESSARY TO PROVIDE THE SAME EQUIVALENT NUMBER OF 7/8" Ø STUDS ALONG THE BEAM AS SHOWN FOR 3/4" Ø STUDS BASED ON THE RATIO OF 3 - 7/8" Ø STUDS FOR 4 - 3/4" Ø STUDS. STUDS OF THE LENGTH SPECIFIED ON THE PLANS MUST BE PROVIDED. THE MAXIMUM SPACING SHALL BE 2'-0".

EXCEPT AT THE INTERIOR SUPPORTS OF CONTINUOUS BEAMS WHERE THE COVER PLATE IS IN CONTACT WITH BEARING PLATE, THE CONTRACTOR MAY, AT HIS OPTION, SUBSTITUTE FOR THE COVER PLATES DESIGNATED ON THE PLANS COVER PLATES OF THE EQUIVALENT AREA PROVIDED THESE PLATES ARE AT LEAST 5/16" IN THICKNESS AND DO NOT EXCEED A WIDTH EQUAL TO THE FLANGE WIDTH LESS 2" OR A THICKNESS EQUAL TO 2 TIMES THE FLANGE THICKNESS. THE SIZE OF FILLET WELDS SHALL CONFORM TO THE REQUIREMENTS OF THE CURRENT ANSI/AASHTO/AWS "BRIDGE WELDING CODE". ELECTROSLAG WELDING WILL NOT BE PERMITTED.

WITH THE SOLE EXCEPTION OF EDGES AT SURFACES WHICH BEAR ON OTHER SURFACES, ALL SHARP EDGES AND ENDS OF SHAPES AND PLATES SHALL BE SLIGHTLY ROUNDED BY SUITABLE MEANS TO A RADIUS OF APPROXIMATELY 1/16 INCH OR EQUIVALENT FLAT SURFACE AT A SUITABLE ANGLE PRIOR TO PAINTING, GALVANIZING, OR METALLIZING.

HANDRAILS AND POSTS:

METAL STANDARDS AND FACES OF THE CONCRETE END POSTS FOR THE METAL RAIL SHALL BE SET NORMAL TO THE GRADE OF THE CURB, UNLESS OTHERWISE SHOWN ON PLANS. THE METAL RAIL AND TOPS OF CONCRETE POSTS USED WITH THE ALUMINUM RAIL SHALL BE BUILT PARALLEL TO THE GRADE OF THE CURB.

METAL HANDRAILS SHALL BE IN ACCORDANCE WITH THE PLANS. RAILS SHALL BE AS MANUFACTURED FOR BRIDGE RAILING. CASTINGS SHALL BE OF A UNIFORM APPEARANCE. FINS AND OTHER DEFORMATIONS RESULTING FROM CASTING OR OTHERWISE SHALL BE REMOVED IN A MANNER SO THAT A UNIFORM COLORING OF THE COMPLETED CASTING SHALL BE OBTAINED. CASTINGS WITH DISCOLORATIONS OR OF NON-UNIFORM COLORING WILL NOT BE ACCEPTED. CERTIFIED MILL REPORTS ARE REQUIRED FOR METAL RAILS AND POSTS.

SPECIAL NOTES:

GENERALLY, IN CASE OF DISCREPANCY, THIS STANDARD SHEET OF NOTES SHALL GOVERN OVER THE SPECIFICATIONS, BUT THE REMAINDER OF THE PLANS SHALL GOVERN OVER NOTES HEREON, AND SPECIAL PROVISIONS SHALL GOVERN OVER ALL. SEE SPECIFICATIONS ARTICLE 105-4.

ENGLISH

JANUARY, 1990