This electronic collection of documents is provided for the convenience of the user and is Not a Certified Document-

The documents contained herein were originally issued and sealed by the individuals whose names and license numbers appear on each page, on the dates appearing with their signature on that page.
This file or an individual page shall not be considered a certified document.

DocuSign Envelope ID: 1899E4DF-E57B-43AE-A9F1-05553AC68CB5

09/08/99

PROJECT: 17BP.9.R.27

CONTRACT: DI00125

See Sheet 1A For Index of Sheets
See Sheet 1B For Conventional Symbols

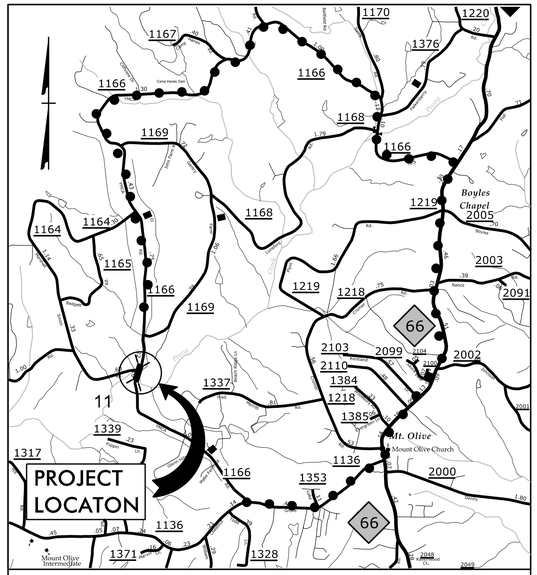

VICINITY MAP

●-●-●-●-●-●DETOUR ROUTE

STATE OF NORTH CAROLINA
DIVISION OF HIGHWAYS

STOKES COUNTY

LOCATION: REPLACE EXISTING BRIDGE NO. 11
SR 1166 – YMCA CAMP RD.

TYPE OF WORK: GRADING, DRAINAGE, PAVING AND STRUCTURE

STATE	STATE PROJECT REFERENCE NO.	SHEET NO.	TOTAL SHEETS
N.C.	17BP.9.R.27	1	

STATE PROJ. NO.	F. A. PROJ. NO.	DESCRIPTION
17BP.9.R.27		PE, R /W, CONST.

NAD 83/
NSRS 2007

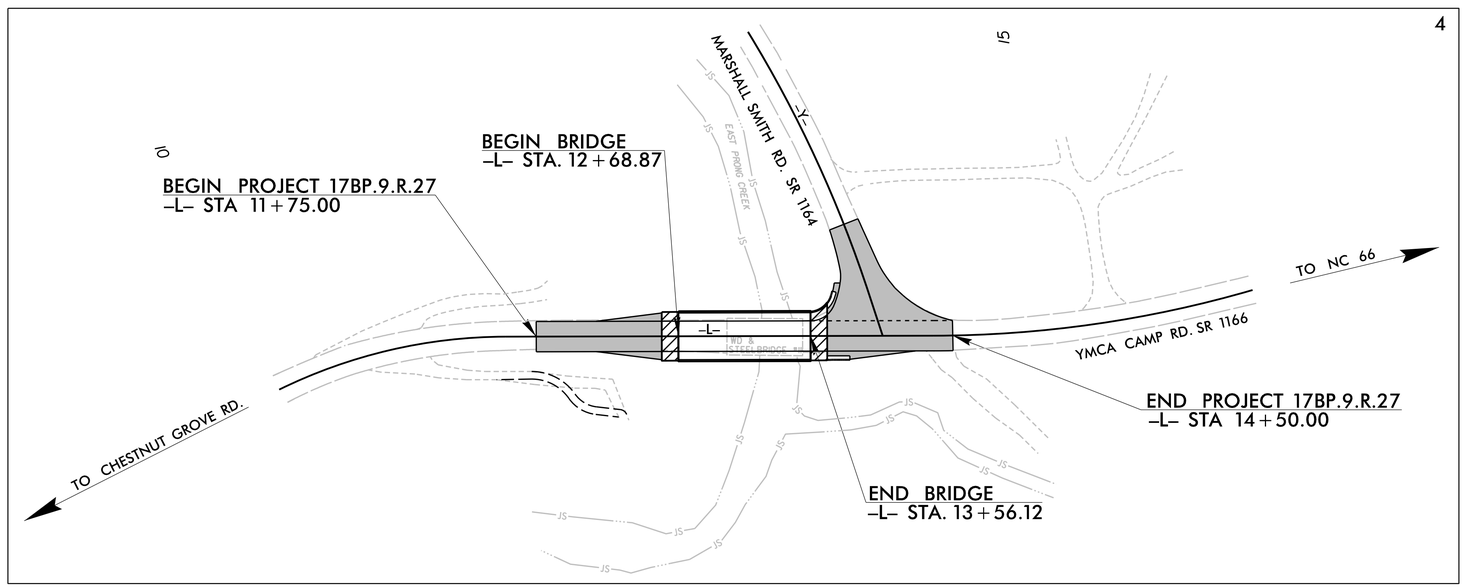

DOCUMENT NOT CONSIDERED FINAL UNLESS ALL SIGNATURES COMPLETED

GRAPHIC SCALES

50 25 0 50 100
PLANS

50 25 0 50 100
PROFILE (HORIZONTAL)

10 5 0 10 20
PROFILE (VERTICAL)

DESIGN DATA

ADT 2008 = 180
V = 60 MPH

FUNC CLASS = LOCAL
SUBREGIONAL TIER

PROJECT LENGTH

LENGTH ROADWAY PROJECT 17BP.9.R.27	=	0.035 MILES
LENGTH STRUCTURE PROJECT 17BP.9.R.27	=	0.017 MILES
TOTAL LENGTH PROJECT 17BP.9.R.27	=	0.052 MILES

NCDOT CONTACT:
MATTHEW JONES, PE
DIVISION 9 BRIDGE PROJECT MANAGER

Prepared In the Office of:
RAMEY KEMP & ASSOCIATES, INC.
Transportation Engineers
5808 Faringdon Place, Suite 100 - Raleigh, North Carolina 27609
919-872-5115 Tel. 919-878-5416 Fax. - www.rameykemp.com
NC License No. C-0910

2012 STANDARD SPECIFICATIONS

AUG. 5, 2013
RIGHT OF WAY DATE:
APRIL 27, 2016
LETTING DATE:

CLAUDETTE M.K. ROQUE, PE
PROJECT ENGINEER

BRET PALIS
PROJECT DESIGNER

HYDRAULICS ENGINEER
NORTH CAROLINA PROFESSIONAL SEAL 9354 ENGINEER W. HENRY WELLS, JR.
3/17/2016
DocuSigned by: W. Henry Wells, Jr.
SIGNATURE: *P.E.*

ROADWAY DESIGN ENGINEER
NORTH CAROLINA PROFESSIONAL SEAL 17306 ENGINEER CLAUDETTE M.K. ROQUE
3/16/2016
DocuSigned by: Claudette M. K. Roque
SIGNATURE: *P.E.*

DIVISION OF HIGHWAYS
STATE OF NORTH CAROLINA
STATE OF NORTH CAROLINA • DEPARTMENT OF TRANSPORTATION
P.E.
STATE HIGHWAY DESIGN ENGINEER

3/16/2016
...\Proj\84-001L Rdy_tsh.dgn
User:cfoque

DocuSign Envelope ID: 1899E4DF-E57B-43AE-A9F1-05553AC68CB5

8/17/99

STATE OF NORTH CAROLINA
DIVISION OF HIGHWAYS

INDEX OF SHEETS, LIST OF STANDARD DRAWINGS & GENERAL NOTES

PROJECT REFERENCE NO.	SHEET NO.
17BP.9.R.27	1A

ROADWAY DESIGN ENGINEER

DocuSign Envelope ID: 4BE8B7F5-E6CC-4F7F-...
NORTH CAROLINA PROFESSIONAL SEAL 17306 ENGINEER
CHARLOTTE M. A. ADDO
3/16/2016

DOCUMENT NOT CONSIDERED FINAL UNLESS ALL SIGNATURES COMPLETED

RAMEY KEMP & ASSOCIATES, INC.
Transportation Engineers
5808 Faringdon Place, Suite 100
Raleigh, North Carolina 27609
919-872-5115 Tel. 919-878-5416 Fax.
www.rameykemp.com
NC License No. C-0910

INDEX OF SHEETS

SHEET NUMBER	SHEET
1	TITLE SHEET
1A	INDEX OF SHEETS, GENERAL NOTES, AND LIST OF STANDARD DRAWINGS
1B	CONVENTIONAL SYMBOLS
1C–1 THRU 1C–2	SURVEY CONTROL SHEETS AND ROW MARKERS
1D–1	CENTERLINE COORDINATE LIST
2A–1	PAVEMENT SCHEDULE, TYPICAL SECTIONS AND TYPICAL ROADWAY DETAILS
2C–1	STRUCTURE ANCHOR UNIT TYPE III DETAIL (TO BE USED IN LIEU OF STANDARD)
2C–2	STRUCTURE ANCHOR UNIT TYPE III SHOP CURVED DETAIL
3B–1	SUMMARIES AND PARCEL INDEX
4	PLAN AND PROFILE SHEET
TMP–1 THRU TMP–2	TRANSPORTATION MANAGEMENT PLANS
PMP–1	PAVEMENT MARKING PLAN
EC–1 THRU EC–05	EROSION CONTROL PLANS
X–1A	CROSS–SECTION SUMMARY
X–1 THRU X–2	CROSS–SECTIONS
S–1 THRU S–21	STRUCTURE PLANS
SN	STRUCTURE PLANS – STANDARD NOTES SHEET

2012 ROADWAY ENGLISH STANDARD DRAWINGS

EFF. 01-17-2012
REV. 10-30-2012

THE FOLLOWING ROADWAY STANDARDS AS APPEAR IN "ROADWAY STANDARD DRAWINGS" HIGHWAY DESIGN BRANCH – N. C. DEPARTMENT OF TRANSPORTATION – RALEIGH, N. C., DATED JANUARY, 2012 ARE APPLICABLE TO THIS PROJECT AND BY REFERENCE HEREBY ARE CONSIDERED A PART OF THESE PLANS:

STD.NO.	TITLE
DIVISION 2 – EARTHWORK	
200.03	METHOD OF CLEARING – METHOD III
225.02	GUIDE FOR GRADING SUBGRADE – SECONDARY AND LOCAL
225.04	METHOD OF OBTAINING SUPERELEVATION – TWO LANE PAVEMENT
DIVISION 3 – PIPE CULVERTS	
300.01	METHOD OF PIPE INSTALLATION
DIVISION 4 – MAJOR STRUCTURES	
422.11	REINFORCED BRIDGE APPROACH FILLS – SUB REGIONAL TIER
DIVISION 5 – SUBGRADE, BASES, AND SHOULDERS	
560.01	METHOD OF SHOULDER CONSTRUCTION – HIGH SIDE OF SUPERELEVATED CURVE – METHOD I
DIVISION 6 – ASPHALT BASES AND PAVEMENTS	
654.01	PAVEMENT REPAIRS
DIVISION 8 – INCIDENTALS	
806.01	CONCRETE RIGHT–OF–WAY MARKER
806.02	GRANITE RIGHT–OF–WAY MARKER
840.00	CONCRETE BASE PAD FOR DRAINAGE STRUCTURES
840.25	ANCHORAGE FOR FRAMES – BRICK, CONCRETE OR PRECAST
840.29	FRAMES AND NARROW SLOT FLAT GRATES
840.35	TRAFFIC BEARING GRATED DROP INLET – FOR CAST IRON DOUBLE FRAME AND GRATES
840.46	TRAFFIC BEARING PRECAST DRAINAGE STRUCTURE
840.66	DRAINAGE STRUCTURE STEPS
846.01	CONCRETE CURB, GUTTER AND CURB & GUTTER
846.04	DROP INLET INSTALLATION IN SHOULDER BERM GUTTER
862.01	GUARDRAIL PLACEMENT
862.02	GUARDRAIL INSTALLATION
876.01	RIP RAP IN CHANNELS
876.02	GUIDE FOR RIP RAP AT PIPE OUTLETS

GENERAL NOTES: 2012 SPECIFICATIONS

EFFECTIVE: 01-17-2012
REVISED: 10-31-2014

GRADE LINE:
GRADING AND SURFACING:

THE GRADE LINES SHOWN DENOTE THE FINISHED ELEVATION OF THE PROPOSED SURFACING AT GRADE POINTS SHOWN ON THE TYPICAL SECTIONS. GRADE LINES MAY BE ADJUSTED AT THEIR BEGINNING AND ENDING AND AT STRUCTURES AS DIRECTED BY THE ENGINEER IN ORDER TO SECURE A PROPER TIE-IN.

CLEARING:

CLEARING ON THIS PROJECT SHALL BE PERFORMED TO THE LIMITS ESTABLISHED BY METHOD III.

SUPERELEVATION:

ALL CURVES ON THIS PROJECT SHALL BE SUPERELEVATED IN ACCORDANCE WITH STD. NO. 225.04 USING THE RATE OF SUPERELEVATION AND RUNOFF SHOWN ON THE PLANS. SUPERELEVATION IS TO BE REVOLVED ABOUT THE GRADE POINTS SHOWN ON THE TYPICAL SECTIONS.

SHOULDER CONSTRUCTION:

ASPHALT, EARTH, AND CONCRETE SHOULDER CONSTRUCTION ON THE HIGH SIDE OF SUPERELEVATED CURVES SHALL BE IN ACCORDANCE WITH STD. NO. 560.01.

SIDE ROADS:

THE CONTRACTOR WILL BE REQUIRED TO DO ALL NECESSARY WORK TO PROVIDE SUITABLE CONNECTIONS WITH ALL ROADS, STREETS, AND DRIVES ENTERING THIS PROJECT. THIS WORK WILL BE PAID FOR AT THE CONTRACT UNIT PRICE FOR THE PARTICULAR ITEMS INVOLVED.

GUARDRAIL:

THE GUARDRAIL LOCATIONS SHOWN ON THE PLANS MAY BE ADJUSTED DURING CONSTRUCTION AS DIRECTED BY THE ENGINEER. THE CONTRACTOR SHOULD CONSULT WITH THE ENGINEER PRIOR TO ORDERING GUARDRAIL MATERIAL.

SUBSURFACE PLANS:

SUBSURFACE INFORMATION SHALL BE AVAILABLE AND PROVIDED FOR THE STRUCTURE PORTION OF THE PROJECT.

END BENTS:

THE ENGINEER SHALL CHECK THE STRUCTURE END BENT PLANS, DETAILS, AND CROSS-SECTIONS PRIOR TO SETTING OF THE SLOPE STAKES FOR THE EMBANKMENT OR EXCAVATION APPROACHING A BRIDGE.

UTILITIES:

UTILITY OWNERS ON THIS PROJECT ARE: DUKE ENERGY, WINDSTREAM.
ANY RELOCATION OF EXISTING UTILITIES WILL BE ACCOMPLISHED BY OTHERS.

RIGHT-OF-WAY MARKERS:

ALL RIGHT-OF-WAY MARKERS ON THIS PROJECT SHALL BE PLACED BY CONTRACT.

3/16/2016
...\Proj\84-0011_Rdy_1A.dgn
[illegible]

04/06/15

PROJECT REFERENCE NO.	SHEET NO.
17BP.9.R.27	1B

STATE OF NORTH CAROLINA, DIVISION OF HIGHWAYS

CONVENTIONAL PLAN SHEET SYMBOLS

Note: Not to Scale **S.U.E. = Subsurface Utility Engineering*

BOUNDARIES AND PROPERTY:

- State Line
- County Line
- Township Line
- City Line
- Reservation Line
- Property Line
- Existing Iron Pin — EIP
- Property Corner
- Property Monument — ECM
- Parcel/Sequence Number — 123
- Existing Fence Line
- Proposed Woven Wire Fence
- Proposed Chain Link Fence
- Proposed Barbed Wire Fence
- Existing Wetland Boundary — WLB
- Proposed Wetland Boundary — WLB
- Existing Endangered Animal Boundary — EAB
- Existing Endangered Plant Boundary — EPB
- Existing Historic Property Boundary — HPB
- Known Contamination Area: Soil
- Potential Contamination Area: Soil
- Known Contamination Area: Water
- Potential Contamination Area: Water
- Contaminated Site: Known or Potential

BUILDINGS AND OTHER CULTURE:

- Gas Pump Vent or U/G Tank Cap
- Sign — S
- Well — W
- Small Mine
- Foundation
- Area Outline
- Cemetery
- Building
- School
- Church
- Dam

HYDROLOGY:

- Stream or Body of Water
- Hydro, Pool or Reservoir
- Jurisdictional Stream — JS
- Buffer Zone 1 — BZ 1
- Buffer Zone 2 — BZ 2
- Flow Arrow
- Disappearing Stream
- Spring
- Wetland
- Proposed Lateral, Tail, Head Ditch — FLOW
- False Sump

RAILROADS:

- Standard Gauge — CSX TRANSPORTATION
- RR Signal Milepost — MILEPOST 35
- Switch — SWITCH
- RR Abandoned
- RR Dismantled

RIGHT OF WAY:

- Baseline Control Point
- Existing Right of Way Marker
- Existing Right of Way Line
- Proposed Right of Way Line — RW
- Proposed Right of Way Line with Iron Pin and Cap Marker — RW
- Proposed Right of Way Line with Concrete or Granite R/W Marker — RW
- Proposed Control of Access Line with Concrete C/A Marker — CA
- Existing Control of Access — CA
- Proposed Control of Access — CA
- Existing Easement Line — E
- Proposed Temporary Construction Easement — E
- Proposed Temporary Drainage Easement — TDE
- Proposed Permanent Drainage Easement — PDE
- Proposed Permanent Drainage / Utility Easement — DUE
- Proposed Permanent Utility Easement — PUE
- Proposed Temporary Utility Easement — TUE
- Proposed Aerial Utility Easement — AUE
- Proposed Permanent Easement with Iron Pin and Cap Marker

ROADS AND RELATED FEATURES:

- Existing Edge of Pavement
- Existing Curb
- Proposed Slope Stakes Cut — C
- Proposed Slope Stakes Fill — F
- Proposed Curb Ramp — CR
- Existing Metal Guardrail
- Proposed Guardrail
- Existing Cable Guiderail
- Proposed Cable Guiderail
- Equality Symbol
- Pavement Removal

VEGETATION:

- Single Tree
- Single Shrub
- Hedge
- Woods Line
- Orchard
- Vineyard — Vineyard

EXISTING STRUCTURES:

MAJOR:

- Bridge, Tunnel or Box Culvert — CONC
- Bridge Wing Wall, Head Wall and End Wall — CONC WW

MINOR:

- Head and End Wall — CONC HW
- Pipe Culvert
- Footbridge
- Drainage Box: Catch Basin, DI or JB — CB
- Paved Ditch Gutter
- Storm Sewer Manhole — S
- Storm Sewer — S

UTILITIES:

POWER:

- Existing Power Pole
- Proposed Power Pole
- Existing Joint Use Pole
- Proposed Joint Use Pole
- Power Manhole — P
- Power Line Tower
- Power Transformer
- U/G Power Cable Hand Hole
- H-Frame Pole
- U/G Power Line LOS B (S.U.E.*) — P
- U/G Power Line LOS C (S.U.E.*) — P
- U/G Power Line LOS D (S.U.E.*) — P

TELEPHONE:

- Existing Telephone Pole
- Proposed Telephone Pole
- Telephone Manhole — T
- Telephone Pedestal — T
- Telephone Cell Tower
- U/G Telephone Cable Hand Hole
- U/G Telephone Cable LOS B (S.U.E.*) — T
- U/G Telephone Cable LOS C (S.U.E.*) — T
- U/G Telephone Cable LOS D (S.U.E.*) — T
- U/G Telephone Conduit LOS B (S.U.E.*) — TC
- U/G Telephone Conduit LOS C (S.U.E.*) — TC
- U/G Telephone Conduit LOS D (S.U.E.*) — TC
- U/G Fiber Optics Cable LOS B (S.U.E.*) — T FO
- U/G Fiber Optics Cable LOS C (S.U.E.*) — T FO
- U/G Fiber Optics Cable LOS D (S.U.E.*) — T FO

WATER:

- Water Manhole — W
- Water Meter
- Water Valve
- Water Hydrant
- U/G Water Line LOS B (S.U.E*) — W
- U/G Water Line LOS C (S.U.E*) — W
- U/G Water Line LOS D (S.U.E*) — W
- Above Ground Water Line — A/G Water

TV:

- TV Pedestal — C
- TV Tower
- U/G TV Cable Hand Hole — HH
- U/G TV Cable LOS B (S.U.E.*) — TV
- U/G TV Cable LOS C (S.U.E.*) — TV
- U/G TV Cable LOS D (S.U.E.*) — TV
- U/G Fiber Optic Cable LOS B (S.U.E.*) — TV FO
- U/G Fiber Optic Cable LOS C (S.U.E.*) — TV FO
- U/G Fiber Optic Cable LOS D (S.U.E.*) — TV FO

GAS:

- Gas Valve
- Gas Meter
- U/G Gas Line LOS B (S.U.E.*) — G
- U/G Gas Line LOS C (S.U.E.*) — G
- U/G Gas Line LOS D (S.U.E.*) — G
- Above Ground Gas Line — A/G Gas

SANITARY SEWER:

- Sanitary Sewer Manhole
- Sanitary Sewer Cleanout
- U/G Sanitary Sewer Line — SS
- Above Ground Sanitary Sewer — A/G Sanitary Sewer
- SS Forced Main Line LOS B (S.U.E.*) — FSS
- SS Forced Main Line LOS C (S.U.E.*) — FSS
- SS Forced Main Line LOS D (S.U.E.*) — FSS

MISCELLANEOUS:

- Utility Pole
- Utility Pole with Base
- Utility Located Object
- Utility Traffic Signal Box — S
- Utility Unknown U/G Line LOS B (S.U.E.*) — ?UTL
- U/G Tank; Water, Gas, Oil
- Underground Storage Tank, Approx. Loc. — UST
- A/G Tank; Water, Gas, Oil
- Geoenvironmental Boring
- U/G Test Hole LOS A (S.U.E.*)
- Abandoned According to Utility Records — AATUR
- End of Information — E.O.I.

PROJECT REFERENCE NO.	SHEET NO.
17BP.9.R.27	1C-1
Division 9 DDC	

SURVEY CONTROL SHEET 17BP.9.R.27

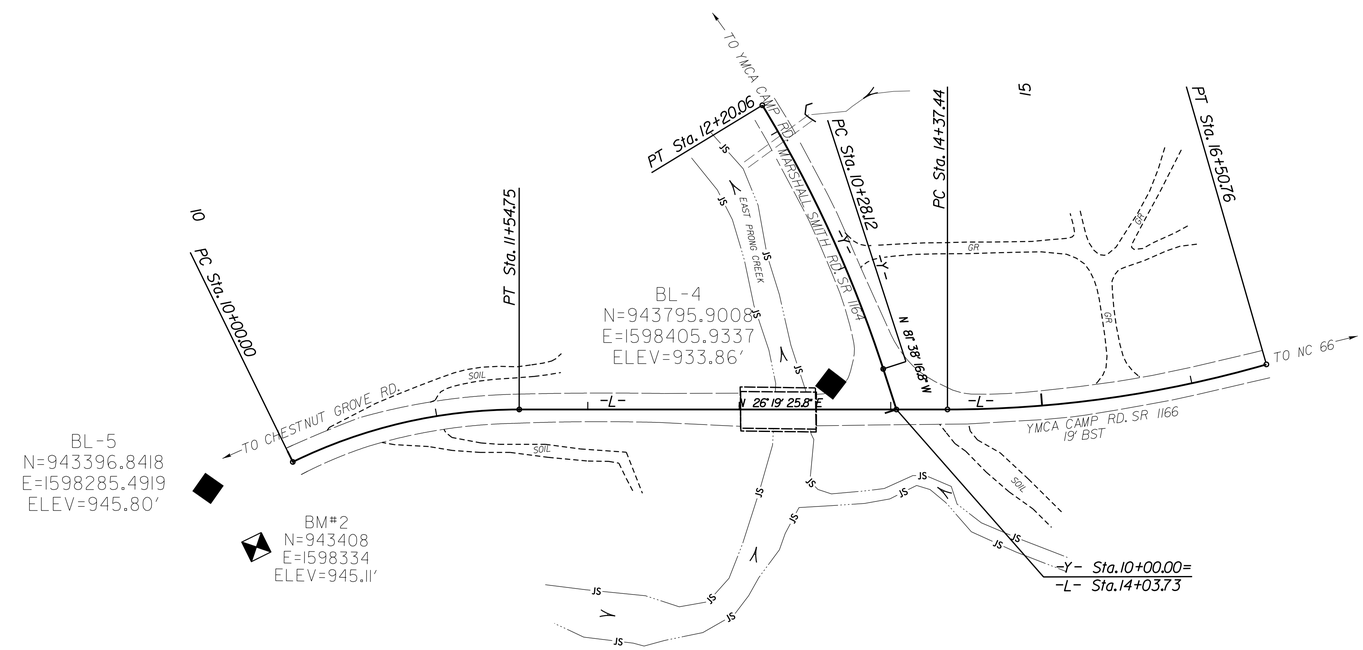

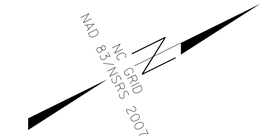

BL-3
N=944191.0773
E=1598561.4300
ELEV=935.49'

DATUM DESCRIPTION

THE LOCALIZED COORDINATE SYSTEM DEVELOPED FOR THIS PROJECT IS BASED ON THE STATE PLANE COORDINATES ESTABLISHED BY NCDOT FOR MONUMENT "B5172-1"
WITH NAD 83/NSRS 2007 STATE PLANE GRID COORDINATES OF
NORTHING: 944936.496(ft) EASTING: 1598586.214(ft)
ELEVATION: 937.80(ft)
THE AVERAGE COMBINED GRID FACTOR USED ON THIS PROJECT (GROUND TO GRID) IS: 1.0000130083
THE N.C. LAMBERT GRID BEARING AND LOCALIZED HORIZONTAL GROUND DISTANCE FROM "B5172-1" TO -L- STATION 10+00.00 IS 1510.20 FT. AT S 11°7'54" W
ALL LINEAR DIMENSIONS ARE LOCALIZED HORIZONTAL DISTANCES
VERTICAL DATUM USED IS NAVD 88

BENCHMARK (NAVD 88)
****
BM#2 ELEVATION = 945.11'
N 943408 E 1598334
OUTSIDE LIMITS
R/R SPIKE SET IN BASE OF 24" OAK TREE
20' WEST OF EDGE OF PAVEMENT
****

BL

POINT	DESC.	NORTH	EAST	ELEVATION	EL STATION	OFFSET
5	BL-5	943396.8418	1598285.4919	945.80	OUTSIDE PROJECT LIMITS	
4	BL-4	943795.9008	1598405.9337	933.86	13+60.40	17.85 LT
3	BL-3	944191.0773	1598561.4300	935.49	OUTSIDE PROJECT LIMITS	
1	B5172-1	944936.4960	1598586.2140	937.80	OUTSIDE PROJECT LIMITS	
2	B5172-2	945768.4630	1598622.8110	981.10	OUTSIDE PROJECT LIMITS	

NOTES:

INDICATES GEODETIC CONTROL MONUMENTS USED OR SET FOR HORIZONTAL PROJECT CONTROL BY THE NCDOT DIVISION 9 DDC UNIT.

PROJECT CONTROL ESTABLISHED USING GLOBAL POSITIONING SYSTEM.

NOTE: DRAWING NOT TO SCALE

3/16/2016
i:\Proj\84-0011_ddc_1C-1.dgn
jsarrington

PROJECT REFERENCE NO.	SHEET NO.
17BP.9.R.27	1C-2
Division 9 DDC	

SURVEY CONTROL SHEET 17BP.9.R.27

ROW MARKER CONCRETE OR GRANITE

ALIGN	STATION	OFFSET	NORTH	EAST
-L-	11+75.00	28.94	943609.3418	1598364.8151
-L-	11+75.00	-31.07	943635.9503	1598311.0331
-L-	12+00.00	50.00	943622.4094	1598394.7793
-L-	12+00.00	-40.00	943662.3194	1598314.1121
-L-	13+59.34	-40.00	943805.1393	1598384.7721
-L-	13+80.00	70.00	943774.8749	1598492.5253
-L-	14+50.00	30.51	943855.6271	1598488.2972

DESIGN ALIGNMENTS

-L-

TYPE	STATION	NORTH	EAST
PC	10+00.00	943454.7114	1598294.6455
PT	11+54.75	943604.0267	1598329.8997
PC	14+37.44	943857.4032	1598455.2574
PT	16+50.76	944059.2912	1598521.9582

-Y-

TYPE	STATION	NORTH	EAST
POT	10+00.00	943827.1876	1598440.3082
PC	10+28.12	943831.2770	1598412.4867
PT	12+20.06	943836.9119	1598221.0670

DATUM DESCRIPTION

THE LOCALIZED COORDINATE SYSTEM DEVELOPED FOR THIS PROJECT IS BASED ON THE STATE PLANE COORDINATES ESTABLISHED BY NCDOT FOR MONUMENT "B5172-1"
WITH NAD 83/NSRS 2007 STATE PLANE GRID COORDINATES OF
NORTHING: 944936.496(ft) EASTING: 1598586.214(ft)
ELEVATION: 937.80(ft)
THE AVERAGE COMBINED GRID FACTOR USED ON THIS PROJECT (GROUND TO GRID) IS: 1.0000130083
THE N.C. LAMBERT GRID BEARING AND LOCALIZED HORIZONTAL GROUND DISTANCE FROM "B5172-1" TO -L- STATION 10+00.00 IS 1510.20 FT. AT S 11°7'54" W

ALL LINEAR DIMENSIONS ARE LOCALIZED HORIZONTAL DISTANCES
VERTICAL DATUM USED IS NAVD 88

NOTE: DRAWING NOT TO SCALE

NOTES:

INDICATES GEODETIC CONTROL MONUMENTS USED OR SET FOR HORIZONTAL PROJECT CONTROL BY THE NCDOT DIVISION 9 DDC UNIT.

PROJECT CONTROL ESTABLISHED USING GLOBAL POSITIONING SYSTEM.

3/16/2016
...\Proj\84-0011.ddc.1C-2.dgn
User:rcoyle

PROJECT REFERENCE NO.	SHEET NO.
17BP.9.R.27	1D-1

STATE OF NORTH CAROLINA
DIVISION OF HIGHWAYS

CENTERLINE COORDINATE LIST

Point #	Chain	Station	Northing (Y)	Easting (X)
1	-L-	10+00.00	943454.7114	1598294.6455
2	-L-	10+50.00	943504.5152	1598298.5286
3	-L-	11+00.00	943553.2125	1598309.6676
4	-L-	11+50.00	943599.7519	1598327.8218
5	-L-	12+00.00	943644.5816	1598349.9642
6	-L-	12+50.00	943689.3967	1598372.1364
7	-L-	13+00.00	943734.2118	1598394.3086
8	-L-	13+50.00	943779.0269	1598416.4808
9	-L-	14+00.00	943823.8420	1598438.6530
10	-L-	14+50.00	943868.7026	1598460.7320
11	-L-	15+00.00	943914.5499	1598480.6599
12	-L-	15+50.00	943961.6082	1598497.5306
13	-L-	16+00.00	944009.6737	1598511.2710
14	-L-	16+50.00	944058.5386	1598521.8218
15	-L-	16+50.76	944059.2912	1598521.9582
16	-Y-	10+00.00	943827.1876	1598440.3082
17	-Y-	10+50.00	943834.1710	1598390.8001
18	-Y-	11+00.00	943838.6159	1598341.0057
19	-Y-	11+50.00	943840.0316	1598291.0335
20	-Y-	12+00.00	943838.4130	1598241.0674
21	-Y-	12+20.06	943836.9119	1598221.0670

DocuSign Envelope ID: 1899E4DF-E57B-43AE-A9F1-05553AC68CB5

6/2/99

PROJECT REFERENCE NO.	SHEET NO.
17BP.9.R.27	2A-1
ROADWAY DESIGN ENGINEER	PAVEMENT DESIGN ENGINEER

3/16/2016

DOCUMENT NOT CONSIDERED FINAL UNLESS ALL SIGNATURES COMPLETED

RAMEY KEMP & ASSOCIATES, INC.
Transportation Engineers
5808 Faringdon Place, Suite 100
Raleigh, North Carolina 27609
919-872-5115 Tel. 919-878-5416 Fax.
www.rameykemp.com
NC License No. C-0910

PAVEMENT SCHEDULE

C1	PROP. APPROX. 1.5″ ASPHALT CONCRETE SURFACE COURSE, TYPE S9.5B, AT AN AVERAGE RATE OF 168 LBS. PER SQ. YD.
C2	PROP. APPROX. 3.0″ ASPHALT CONCRETE SURFACE COURSE, TYPE S9.5B, AT AN AVERAGE RATE OF 168 LBS. PER SQ. YD. IN EACH OF TWO LAYERS.
C3	PROP. VAR. DEPTH ASPHALT CONCRETE SURFACE COURSE, TYPE S9.5B, AT AN AVERAGE RATE OF 112 LBS. PER SQ. YD. PER 1″ DEPTH TO BE PLACED IN LAYERS NOT TO EXCEED 2″ IN DEPTH.
D1	PROP. APPROX. 2.5″ ASPHALT CONCRETE INTERMEDIATE COURSE, TYPE I19.0B AT AN AVERAGE RATE OF 285 LBS. PER SQ. YD.
D2	PROP. VAR. DEPTH ASPHALT CONCRETE INTERMEDIATE COURSE, TYPE I19.0B, AT AN AVERAGE RATE OF 114 LBS. PER SQ. YD. PER 1″ DEPTH TO BE PLACED IN LAYERS NOT LESS THAN 2.5″ OR GREATER THAN 4″ IN DEPTH.
E1	PROP. APPROX. 4″ ASPHALT CONCRETE BASE COURSE, TYPE B25.0B, AT AN AVERAGE RATE OF 456 LBS. PER SQ. YD.
E2	PROP. VAR. DEPTH ASPHALT CONCRETE BASE COURSE, TYPE B25.0B, AT AN AVERAGE RATE OF 114 LBS. PER SQ. YD. PER 1″ DEPTH TO BE PLACED IN LAYERS NOT GREATER THAN 5.5″ IN DEPTH OR LESS THAN 3″ IN DEPTH.
R	SHOULDER BERM GUTTER
T	COMPACTED EARTH MATERIAL
U	EXISTING PAVEMENT
W	VARIABLE DEPTH ASPHALT PAVEMENT (SEE STANDARD WEDGING DETAIL THIS SHEET)

NOTE: ALL PAVEMENT SLOPES ARE 1:1 UNLESS OTHERWISE SPECIFIED.

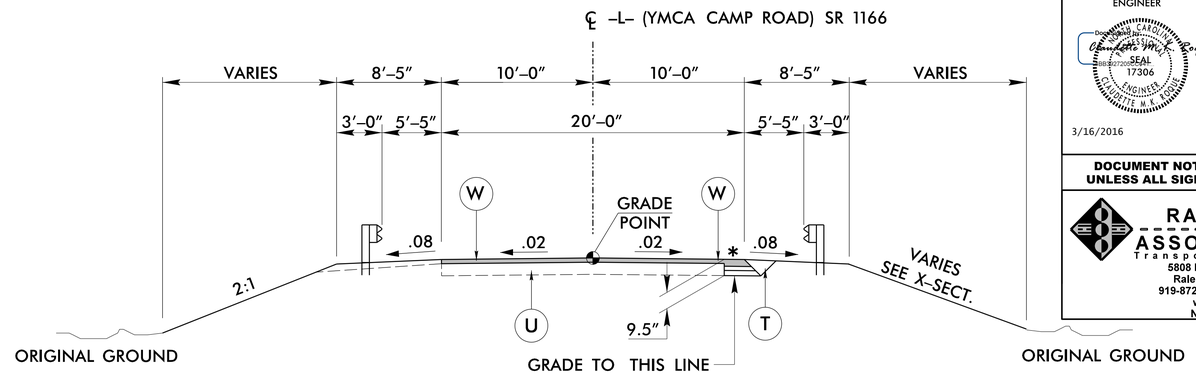

TYPICAL SECTION NO. 1

WEDGE AND MILL AS REQUIRED

–L– STA. 11+75.00 TO –L– STA. 12+50.00
–L– STA. 13+82.00 TO –L– STA. 14+50.00

*FULL DEPTH PAVEMENT WIDENING CONSISTS OF 3″ S9.5B, 2.5″ I19.0B AND 4″ B25.0B

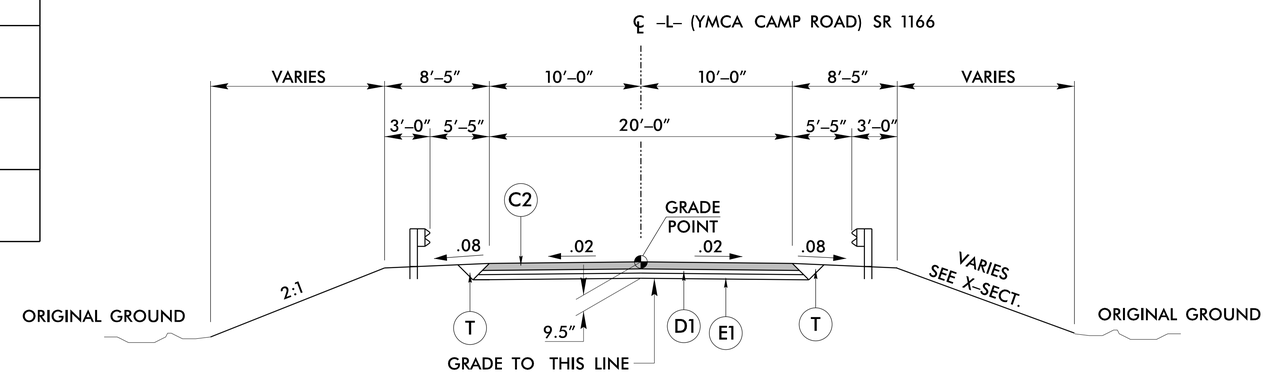

TYPICAL SECTION NO. 2

–L– STA. 12+50.00 TO –L– STA. 12+68.87 (BEGIN BRIDGE)
–L– STA. 13+56.12 (END BRIDGE) TO –L– STA. 13+82.00

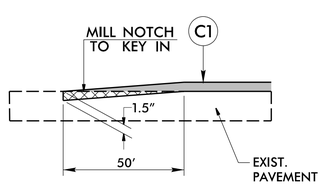

BUTT MILL DETAIL

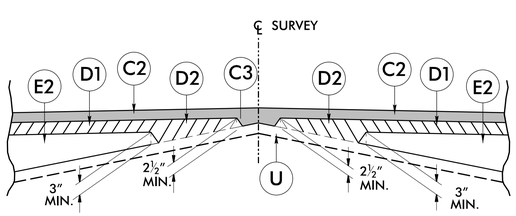

DETAIL SHOWING METHOD OF WEDGING

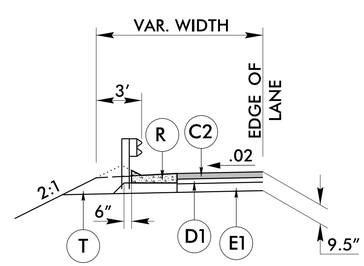

DETAIL FOR SHOULDER BERM GUTTER

USE IN CONJUNCTION WITH TYPICAL SECTION NO. 2

–L– STA. 13+67.12 (END APPROACH SLAB) TO –L– STA. 13+82 +/– RT
–L– STA. 13+67.12 (END APPROACH SLAB) TO –L– STA. 13+73 +/– LT

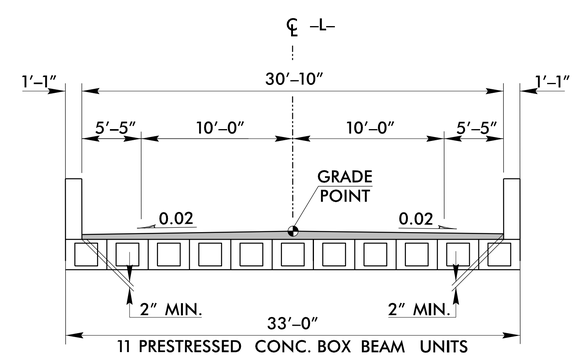

BRIDGE TYPICAL SECTION

–L– STA. 12+68.87 (BEGIN BRIDGE) TO –L– STA. 13+56.12 (END BRIDGE)

3/16/2016
...\Proj\84-0011_Rdy_typ.dgn
User:rcoyle

$$$$$$$SYSTIME$$$$$
$$$$$$$$$$$$$$$$$$DGN$$$$$$$$$$$$$$$$
$$$$USERNAME$$$$

STATE OF NORTH CAROLINA
DEPT. OF TRANSPORTATION
DIVISION OF HIGHWAYS
RALEIGH, N.C.

ENGLISH DETAIL DRAWING FOR
STRUCTURE ANCHOR UNITS
GUARDRAIL ANCHOR UNIT, TYPE III FOR ATTACHMENT TO RAIL ON BRIDGE - SUB REGIONAL TIER

SHEET 2 OF 7
862d03

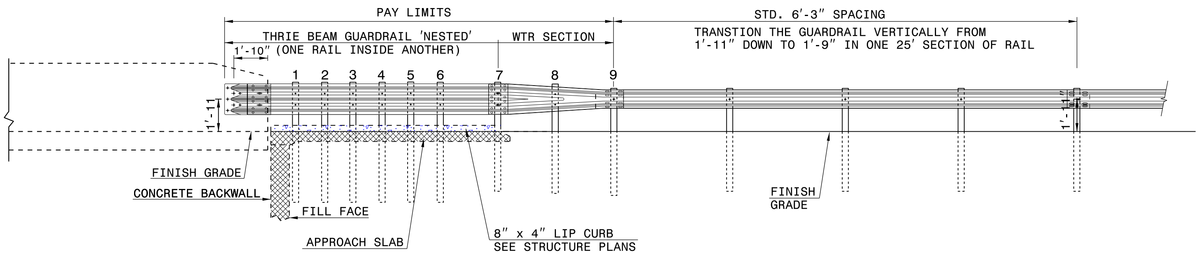

ELEVATION

NOTE:
**POST NOT REQUIRED FOR SKEW ANGLES GREATER THAN 150° OR LESS THAN 30° UNLESS OTHERWISE DIRECTED BY THE ENGINEER.
*THE DISTANCE FROM END OF BRIDGE RAIL TO CENTER LINE OF THE FIRST POST SHOULD BE 11½" IF CONCRETE BACKWALL IS NOT PRESENT.
-SHOULDER BERM GUTTER MUST BE INSTALLED TO THE LIMITS 8" x 4" LIP CURB IS SHOWN IF ANCHOR UNIT IS NOT ADJACENT TO AN APPROACH SLAB.
-MEASURE GUARDRAIL HEIGHT FROM THE TOP OF ADJACENT SURFACE (SHOULDER, BERM, OR GUTTER).
-LAP JOINTS IN THE DIRECTION OF TRAFFIC FLOW.
-SEE SHEET 5 FOR POST SECTIONS 1 THRU 9.

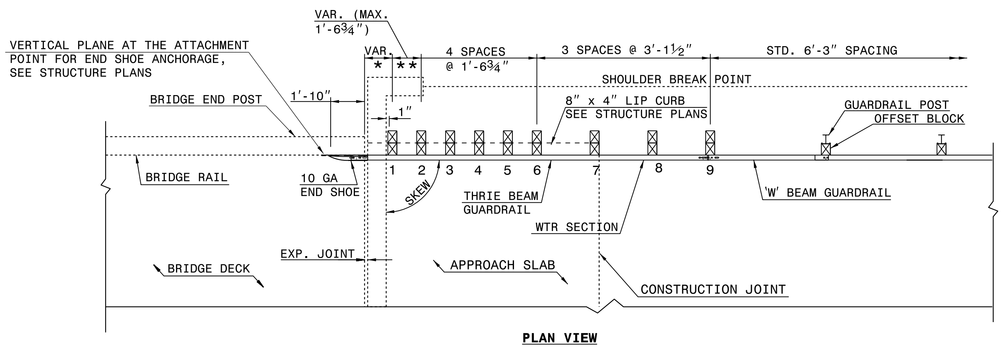

PLAN VIEW

GUARDRAIL ANCHOR UNIT, TYPE III FOR ATTACHMENT TO RAIL ON BRIDGE - SUB REGIONAL TIER

STATE OF NORTH CAROLINA
DEPT. OF TRANSPORTATION
DIVISION OF HIGHWAYS
RALEIGH, N.C.

ENGLISH DETAIL DRAWING FOR
STRUCTURE ANCHOR UNITS
GUARDRAIL ANCHOR UNIT, TYPE III FOR ATTACHMENT TO RAIL ON BRIDGE - SUB REGIONAL TIER

SHEET 2 OF 7
862d03

STATE OF NORTH CAROLINA
DEPT. OF TRANSPORTATION
DIVISION OF HIGHWAYS
RALEIGH, N.C.

ENGLISH DETAIL DRAWING FOR
STRUCTURE ANCHOR UNITS
GUARDRAIL ANCHOR UNIT, TYPE III

SHEET 3 OF 7
862d03

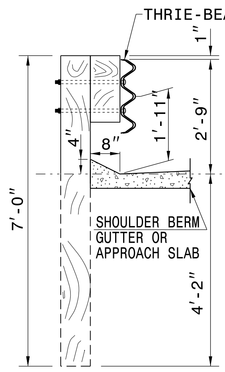

SECTION OF THRIE BEAM POSTS 1 THRU 6

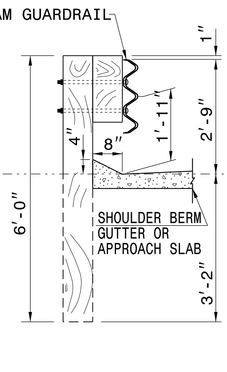

SECTION OF THRIE BEAM POST 7

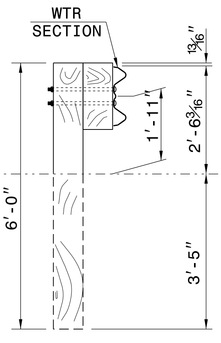

SECTION OF WTR BEAM POST 8

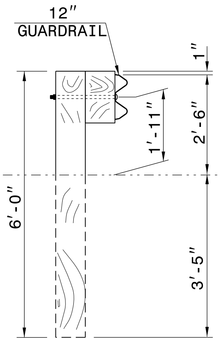

SECTION OF 'W' BEAM POST 9

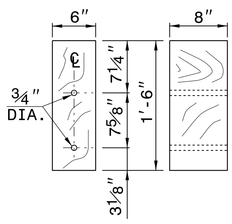

THRIE BEAM OFFSET BLOCK

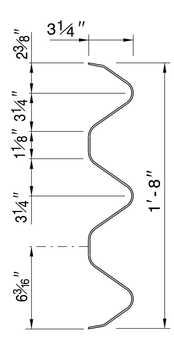

THRIE-BEAM SECTION

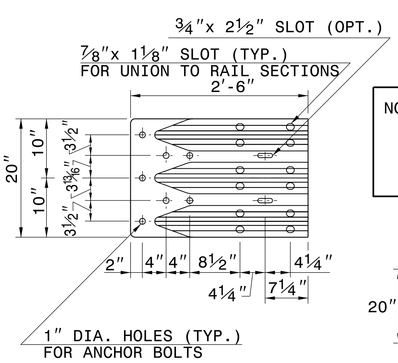

END SHOE

NOTE: THE MID POST AND OFFSET BLOCK OF THE WTR SECTION WILL REQUIRE SPECIAL BOLT HOLE DRILLING IN THE THRIE BEAM OFFSET BLOCK AND LINE POST.

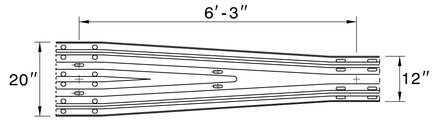

WTR SECTION
ELEVATION VIEW

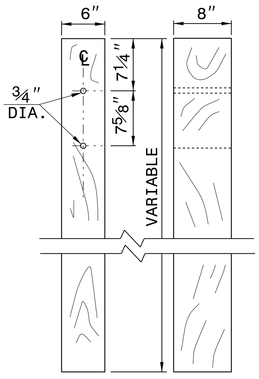

THRIE BEAM LINE POST

STATE OF NORTH CAROLINA
DEPT. OF TRANSPORTATION
DIVISION OF HIGHWAYS
RALEIGH, N.C.

ENGLISH DETAIL DRAWING FOR
STRUCTURE ANCHOR UNITS
GUARDRAIL ANCHOR UNIT, TYPE III

SHEET 3 OF 7
862d03

CONTRACT STANDARDS AND DEVELOPMENT UNIT
Office 919-707-6950 FAX 919-250-4119

SEE TITLE BLOCK

ORIGINAL BY: J. HOWERTON DATE: 06-22-12
MODIFIED BY: DATE:
CHECKED BY: DATE:
FILE SPEC.:

PROJECT REFERENCE NO. 17BP.9.R.27
SHEET NO. 2C-1

STATE OF
NORTH CAROLINA
DEPT. OF TRANSPORTATION
DIVISION OF HIGHWAYS
RALEIGH, N.C.

ENGLISH DETAIL DRAWING FOR

TYPE III - SHOP CURVED STRUCTURE ANCHOR UNIT

SHEET 1 OF 1

TYPE III SC

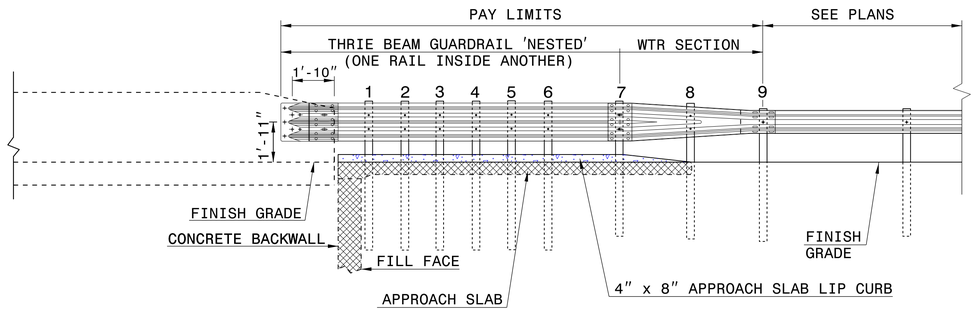

ELEVATION

SEE ROADWAY PLANS FOR END TREATMENT

NOTE:
- **POST NOT REQUIRED FOR SKEW ANGLES GREATER THAN 150° OR LESS THAN 30° UNLESS OTHERWISE DIRECTED BY THE ENGINEER.
- *THE DISTANCE FROM END OF BRIDGE RAIL TO CENTER LINE OF THE FIRST POST SHOULD BE 11½" IF CONCRETE BACKWALL IS NOT PRESENT.
- -SHOULDER BERM GUTTER MUST BE INSTALLED TO THE LIMITS 8" x 4" LIP CURB IS SHOWN IF ANCHOR UNIT IS NOT ADJACENT TO AN APPROACH SLAB.
- -MEASURE GUARDRAIL HEIGHT FROM THE TOP OF ADJACENT SURFACE (SHOULDER, BERM, OR GUTTER).
- -USE NO STEEL POSTS WITHIN THE GUARDRAIL ANCHOR UNIT LIMITS.
- -LAP JOINTS IN THE DIRECTION OF TRAFFIC FLOW.
- -SEE STANDARD 862.03 SHEET 4 FOR POST SECTIONS 1 THRU 9.

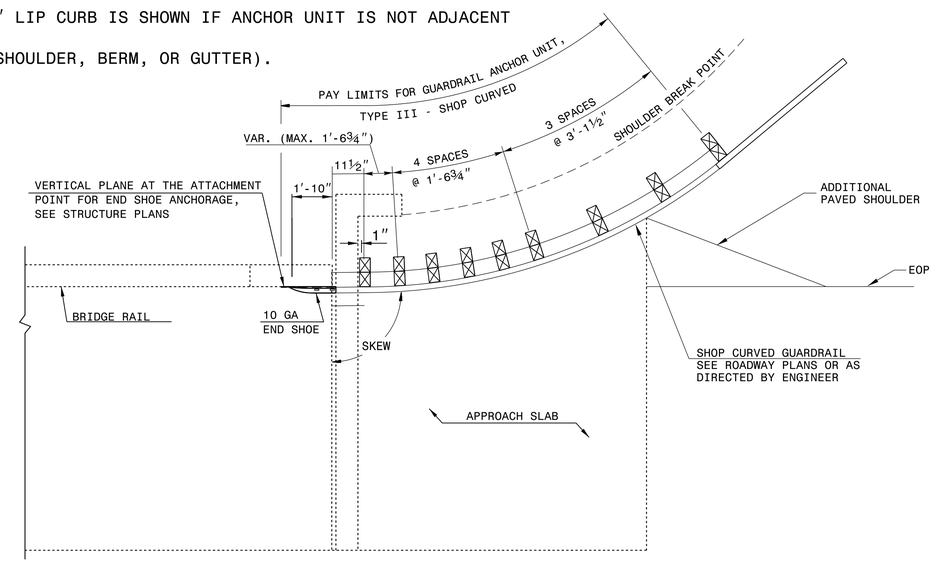

PLAN VIEW

GUARDRAIL ANCHOR UNIT, TYPE III - SHOP CURVED FOR ATTACHMENT TO RAIL ON BRIDGE

STATE OF
NORTH CAROLINA
DEPT. OF TRANSPORTATION
DIVISION OF HIGHWAYS
RALEIGH, N.C.

ENGLISH DETAIL DRAWING FOR

TYPE III - SHOP CURVED STRUCTURE ANCHOR UNIT

SHEET 1 OF 1

TYPE III SC

NORTH CAROLINA PROFESSIONAL SEAL 022966 ENGINEER Joel S. Howerton

CONTRACT STANDARDS
AND DEVELOPMENT UNIT
Office 919-707-6950 FAX 919-250-4119

SEE PLATE FOR TITLE

ORIGINAL BY: E.E.Ward DATE: 4-4-02
MODIFIED BY: T.S.Spell DATE: 5-29-09
CHECKED BY: DATE:
FILE SPEC.: ward:\usr\details\stand\862stds\typeiiisc.dgn

5/14/99

$$$$SYTIME$$$$
$$$$USERNAME$$$$

6/21/00

COMPUTED BY: BBP	DATE: 9/9/13
CHECKED BY: CMKR	DATE: 3/14/16

STATE OF NORTH CAROLINA
DIVISION OF HIGHWAYS

PROJECT REFERENCE NO.	SHEET NO.
17BP.9.R.27	3B-1

PARCEL INDEX

PARCEL NO.	PLAN SHEET NO.	PROPERTY OWNER NAME
1	4	MAX BOYLES /ELLIS BOYLES
2 & 2Z	4	BARBARA ANN BOVENDER
3 & 3Z	4	SEAN W. BEESON SCOTT AND WIFE KRISTA A. SCOTT
4 & 4Z	4	MAX BOYLES /ELLIS BOYLES

PAVEMENT REMOVAL SUMMARY

SURVEY LINE	STATION	STATION	LOCATION LT/RT/CL	YD^2
-L-	12+50	13+01	CL	116.22
-L-	13+51	13+82	CL	101.00
			TOTAL:	217.22
			SAY:	220

SHOULDER BERM GUTTER SUMMARY

SURVEY LINE	STATION	STATION	LENGTH
-L-	13+67.12 RT	13+82 +/- RT	15'
-L-	13+67.12 LT	13+73 +/- LT	13'
		TOTAL:	28'
		SAY:	30'

SUMMARY OF EARTHWORK

STATION	STATION	UNCL. EXCAV.	UNCL. EXCAV. UNDERCUT	EMBANK. +%	BORROW	WASTE
-L- STA. 11+75.00	-L- STA. 13+00.00	67		239	172	
SUBTOTAL		67		239	172	
-L- STA. 13+56.12	-L- STA. 14+50.00	27		53	26	
SUBTOTAL		27		53	26	
TOTAL		94		292	198	
ADJUSTMENTS DUE TO:						
LOSS DUE TO CLEARING & GRUBBING						
WASTE IN LIEU OF BORROW						
PROJECT TOTAL		94		292	198	
5% TO REPLACE TOPSOIL IN BORROW PITS					10	
GRAND TOTAL		94			208	
SAY		100			225	

SELECT GRANULAR MATERIAL	100 CY
GEOTEXTILE FOR SOIL STABILIZATION	100 SY
ESTIMATE UNDERCUT	50 CY
ESTIMATE SHALLOW UNDERCUT	50 CY
CLASS IV SUBGRADE STABILIZATION	50 TONS

Approximate quantities only. Unclassified excavation, borrow excavation, pavement removal, fine grading, and clearing and grubbing will be paid for at the lump sum price for "Grading".

NOTE: Invert Elevations are for Bid Purposes only and shall not be used for project construction stakeout. See "Standard Specifications For Roads and Structures, Section 300-5".

LIST OF PIPES, ENDWALLS, ETC. (FOR PIPES 48" & UNDER)

STATION	LOCATION (LT,RT, OR CL)	STRUCTURE NO. FROM	STRUCTURE NO. TO	TOP ELEVATION	INVERT ELEVATION	INVERT ELEVATION	SLOPE CRITICAL	DRAINAGE PIPE (RCP, CSP, CAAP, HDPE, or PVC) 12"	15"	18"	24"	30"	36"	42"	48"	C.S. PIPE (UNLESS NOTED OTHRWISE) 12" .064	15" .064	18" .064	24" .064	30" .079	36" .079	42" .109	48" .109
13+72.25	LT	0401		933.90																			
13+72.25	RT	0401	0402		931.15	931.01																	
13+80.00	RT	0402		934.77																			
13+80.00	RT	0402	0403		931.01	915.25											34						
TOTALS																	34						

STATION	CLASS IV R.C. PIPE (UNLESS OTHERWISE NOTED) 12"	15"	18"	24"	30"	36"	42"	48"	15" SIDE DRAIN PIPE	18" SIDE DRAIN PIPE	24" SIDE DRAIN PIPE	ENDWALLS STD. 838.01, STD. 838.11 OR STD. 838.80 (UNLESS NOTED OTHERWISE) CU. YDS. R.C.P.	C.S.P.	QUANTITIES FOR DRAINAGE STRUCTURES PER EACH (0' THRU 5.0')	LIN. *FT. A 5.0' THRU 10.0'	B 10.0' AND ABOVE	C.B. STD. 840.01 OR STD. 840.02	FRAME, GRATES AND HOOD STANDARD 840.03 TYPE OF GRATE E	F	G	
13+72.25														1							
13+72.25		44																			
13+80.00														1							
13+80.00																					
TOTALS		44												2							

* TOTAL L.F. FOR PAY QUANTITY SHALL BE COL. 'A' + (1.3 X COL.'B')

STATION	D.I. STD. 840.14 OR STD. 840.15	D.I. FRAME & GRATE STD. 840.16	G.D.I. TYPE "A" STD. 840.17 OR 840.26	G.D.I. TYPE "B" STD. 840.18 OR 840.27	G.D.I. TYPE "D" STD. 840.19 OR 840.28	G.D.I. FRAME WITH GRATE STD. 840.22	G.D.I. FRAME WITH TWO GRATES STD. 840.22	G.D.I. (N.S.) FRAME WITH GRATE STD. 840.24	G.D.I. (N.S.) FRAME WITH TWO GRATES STD. 840.24	FRAMES AND NARROW SLOT FLAT GRATES STD. 840.29	J.B. STD. 840.31 OR 840.32	T.B.G.D.I. STD. 840.35	T.B.D.I. FRAME WITH TWO GRATES STD. 840.36					CORR. STEEL ELBOWS NO. & SIZE 15"	CONC. COLLARS CL. "B" C.Y. STD 840.72	CONC. & BRICK PIPE PLUG, C.Y. STD. 840.71	PIPE REMOVAL LIN.FT.	REMARKS
13+72.25										1		1										
13+72.25																						
13+80.00										1		1										
13+80.00																		2				
TOTALS										2		2						2				

ABBREVIATIONS

C.B.	CATCH BASIN
N.D.I.	NARROW DROP INLET
D.I.	DROP INLET
G.D.I.	GRATED DROP INLET
G.D.I. (N.S.)	GRATED DROP INLET (NARROW SLOT)
J.B.	JUNCTION BOX
M.H.	MANHOLE
T.B.D.I.	TRAFFIC BEARING DROP INLET
T.B.J.B.	TRAFFIC BEARING JUNCTION BOX

"N" = DISTANCE FROM EDGE OF LANE TO FACE OF GUARDRAIL.
TOTAL SHOULDER WIDTH = DISTANCE FROM EDGE OF TRAVEL LANE TO SHOULDER BREAK POINT.
FLARE LENGTH = DISTANCE FROM LAST SECTION OF PARALLEL GUARDRAIL TO END OF GUARDRAIL.
W = TOTAL WIDTH OF FLARE FROM BEGINNING OF TAPER TO END OF GUARDRAIL.
G = GATING IMPACT ATTENUATOR TYPE 350
NG = NON-GATING IMPACT ATTENUATOR TYPE 350

GUARDRAIL SUMMARY

SURVEY LINE	BEG. STA.	END STA.	LOCATION	LENGTH STRAIGHT	LENGTH SHOP CURVED	LENGTH DOUBLE FACED	WARRANT POINT APPROACH END	WARRANT POINT TRAILING END	"N" DIST. FROM E.O.L.	TOTAL SHOUL. WIDTH
-L-	11+93.87	12+68.87	RT	75'			BRIDGE		5'-5"	8'-5"
-L-	11+93.87	12+68.87	LT	75'				BRIDGE	5'-5"	8'-5"
-L-	13+56.12	14+31.12	RT	75'				BRIDGE	5'-5"	8'-5"
-L-	13+56.12		LT				BRIDGE			
-Y-		10+77.30	LT		62.5'				5'-5"	8'-5"
			SUBTOTAL	225'	62.5'					
	LESS ANCHOR DEDUCTIONS									
	GRAU-350	3 @ 50.00'	=	-150'						
	AT-1	1 @ 6.25'	=		-6.25'					
	TYPE III	4 @ 18.75'	=	-56.25	-18.75					
			TOTAL "NEW" GUARDRAIL	18.75	37.5					
			SAY	25	37.5					

SURVEY LINE	FLARE LENGTH APPROACH END	FLARE LENGTH TRAILING END	W APPROACH END	W TRAILING END	ANCHORS XI MOD	XI	GRAU 350	M-350	III	CAT-1	SHOP CURVE TYPE III	TES	AT-1	IMPACT ATTENUATOR TYPE 350 EA	G	NG	SINGLE FACED GUARDRAIL	REMOVE EXISTING GUARDRAIL	REMOVE AND STOCKPILE EXISTING GUARDRAIL	REMARKS
-L-							1		1											
-L-							1		1											
-L-							1		1											
-L-											1									
-Y-													1							
SAY							3		3		1		1							

3/17/2016
...\Roadway\Proj\84-0011_Rdy_3.dgn

DocuSign Envelope ID: 1899E4DF-E57B-43AE-A9F1-05553AC68CB5

8/17/99

REVISIONS

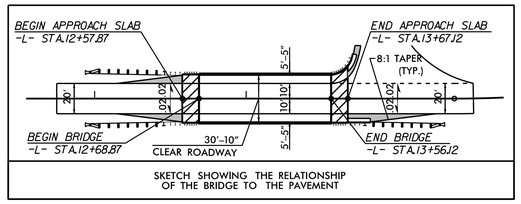

SKETCH SHOWING THE RELATIONSHIP OF THE BRIDGE TO THE PAVEMENT

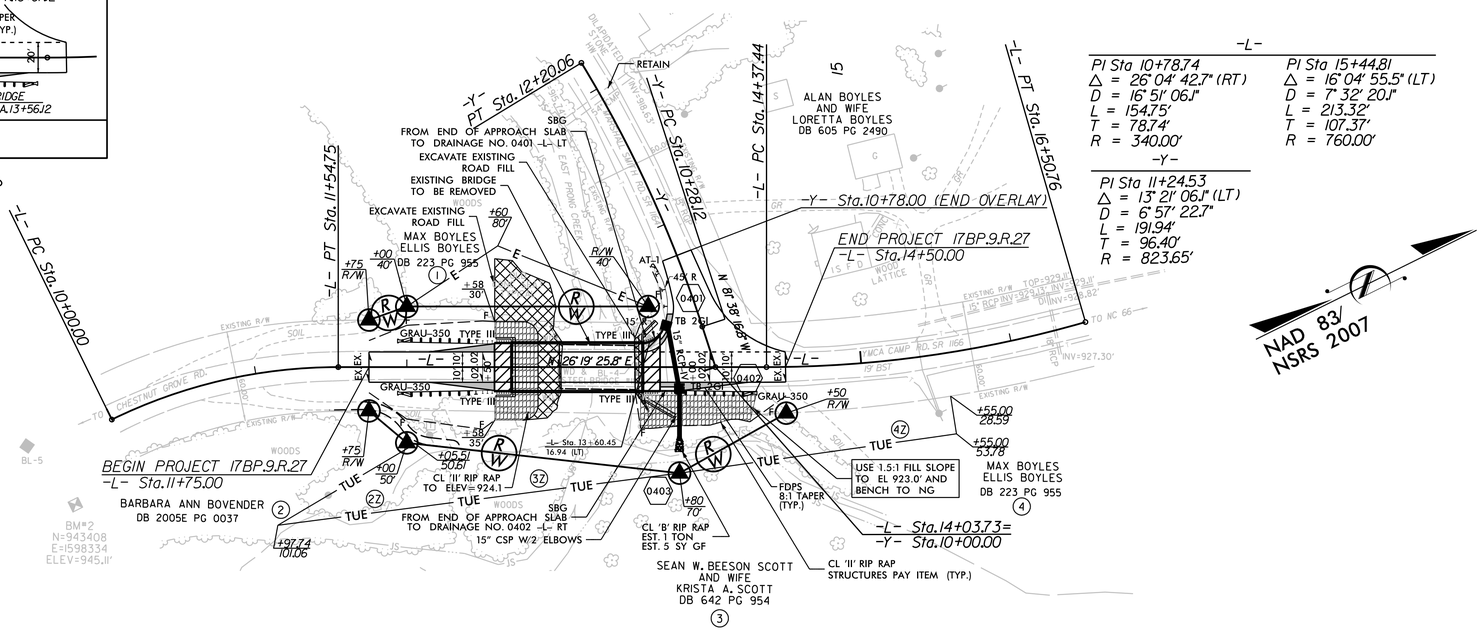

-L-

PI Sta 10+78.74
Δ = 26° 04' 42.7" (RT)
D = 16° 51' 06.1"
L = 154.75'
T = 78.74'
R = 340.00'

PI Sta 15+44.81
Δ = 16° 04' 55.5" (LT)
D = 7° 32' 20.1"
L = 213.32'
T = 107.37'
R = 760.00'

-Y-

PI Sta 11+24.53
Δ = 13° 21' 06.1" (LT)
D = 6° 57' 22.7"
L = 191.94'
T = 96.40'
R = 823.65'

BRIDGE APPROACH SLAB

FOR STRUCTURE PLANS, SEE SHEETS S-1 THRU S-21

PROJECT REFERENCE NO.	SHEET NO.
17BP.9.R.27	4
R/W SHEET NO.	

ROADWAY DESIGN ENGINEER
DocuSigned by: Clarence M. Rogers Jr.
SEAL 17306
3/16/2016

HYDRAULICS ENGINEER
DocuSigned by: W. Henry Walls Jr.
SEAL 9334
3/17/2016

DOCUMENT NOT CONSIDERED FINAL UNLESS ALL SIGNATURES COMPLETED

RAMEY KEMP & ASSOCIATES, INC.
Transportation Engineers
5808 Faringdon Place, Suite 100
Raleigh, North Carolina 27609
919-872-5115 Tel. 919-878-5416 Fax.
www.rameykemp.com
NC License No. C-0910

BM #2: ELEVATION = 945.11'
N 943408 E 1598334
RR SPIKE SET IN BASE OF 24" OAK 20' FROM WEST EP

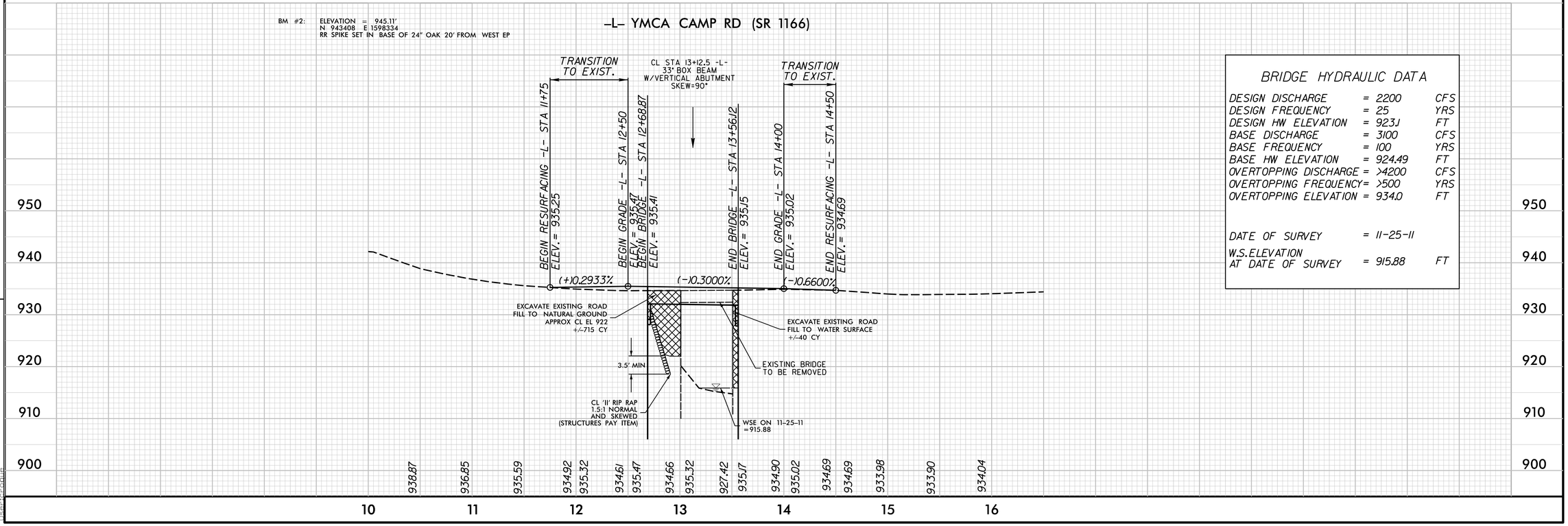

BRIDGE HYDRAULIC DATA

DESIGN DISCHARGE	= 2200	CFS
DESIGN FREQUENCY	= 25	YRS
DESIGN HW ELEVATION	= 923.1	FT
BASE DISCHARGE	= 3100	CFS
BASE FREQUENCY	= 100	YRS
BASE HW ELEVATION	= 924.49	FT
OVERTOPPING DISCHARGE	= >4200	CFS
OVERTOPPING FREQUENCY	= >500	YRS
OVERTOPPING ELEVATION	= 934.0	FT
DATE OF SURVEY	= 11-25-11	
W.S.ELEVATION AT DATE OF SURVEY	= 915.88	FT

3/16/2016
...\Proj\84-0011_Rdy_psh.dgn

DocuSign Envelope ID: 1899E4DF-E57B-43AE-A9F1-05553AC68CB5

PROJ. REFERENCE NO.	SHEET NO.
17BP.9.R.27	TMP-1

TIP PROJECT: 17BP.9.R.27

CONTRACT: DI00125

STATE OF NORTH CAROLINA
DIVISION OF HIGHWAYS

TRANSPORTATION MANAGEMENT PLAN

STOKES COUNTY

ROADWAY STANDARD DRAWINGS

THE FOLLOWING ROADWAY STANDARDS AS SHOWN IN "ROADWAY STANDARD DRAWINGS" - PROJECT SERVICES UNIT - N.C. DEPARTMENT OF TRANSPORTATION - RALEIGH, N.C., DATED JANAUARY 2012 ARE APPLICABLE TO THIS PROJECT AND BY REFERENCE HEREBY ARE CONSIDERED A PART OF THESE PLANS:

STD. NO.	TITLE
1101.01	WORK ZONE WARNING SIGNS
1101.03	TEMPORARY ROAD CLOSURES
1101.11	TRAFFIC CONTROL DESIGN TABLES
1110.01	STATIONARY WORK ZONE SIGNS
1145.01	BARRICADES
1205.01	PAVEMENT MARKINGS - LINE TYPES AND OFFSETS
1205.02	PAVEMENT MARKINGS - TWO LANE AND MULTILANE ROADWAYS
1205.04	PAVEMENT MARKINGS - INTERSECTIONS
1205.12	PAVEMENT MARKINGS - BRIDGES
1261.01	GUARDRAIL AND BARRIER DELINEATORS - INSTALLATION SPACING
1261.02	GUARDRAIL AND BARRIER DELINEATORS - TYPES AND MOUNTING
1262.01	GUARDRAIL END DELINEATION
1264.01	OBJECT MARKERS - TYPES
1264.02	OBJECT MARKERS - INSTALLATION

INDEX OF SHEETS

SHEET NO.	TITLE
TMP-1	LIST OF APPLICABLE ROADWAY STANDARD DRAWINGS. LEGEND AND INDEX OF SHEETS
TMP-2	GENERAL NOTES, PHASING AND DETOUR SIGNING

LEGEND

GENERAL

- DIRECTION OF TRAFFIC FLOW
- DIRECTION OF PEDESTRIAN TRAFFIC FLOW
- EXIST. PVMT.
- NORTH ARROW
- PROPOSED PVMT.
- WORK AREA
- REMOVAL
- USER DEFINED (IF NEEDED)
- USER DEFINED (IF NEEDED)

TRAFFIC CONTROL DEVICES

- BARRICADE (TYPE III)
- CONE
- DRUM — SKINNY DRUM — TUBULAR MARKER
- TEMPORARY CRASH CUSHION
- FLASHING ARROW PANEL (TYPE C)
- FLAGGER
- LAW ENFORCEMENT
- TRUCK MOUNTED IMPACT ATTENUATOR (TMIA)
- CHANGEABLE MESSAGE SIGN (CMS)

TEMPORARY SIGNING

- PORTABLE SIGN
- STATIONARY SIGN
- STATIONARY OR PORTABLE SIGN

PAVEMENT MARKERS

- CRYSTAL/CRYSTAL
- CRYSTAL/RED
- YELLOW/YELLOW

PAVEMENT MARKING SYMBOLS

- PAVEMENT MARKING SYMBOLS

DOCUMENT NOT CONSIDERED FINAL UNLESS ALL SIGNATURES COMPLETED

MERRICK "TRE" DUGAL, III, P.E.
PROJECT ENGINEER
CLAUDETTE M.K. ROQUE, P.E.
PROJECT DESIGN ENGINEER

APPROVED DocuSigned by: Claudette M. K. Roque DATE 3/16/2016

NORTH CAROLINA PROFESSIONAL SEAL 17306 ENGINEER CLAUDETTE M.K. ROQUE

DIVISION OF HIGHWAYS STATE OF NORTH CAROLINA DEPARTMENT OF TRANSPORTATION WORK ZONE TRAFFIC CONTROL

Prepared in the Office of:
RAMEY KEMP & ASSOCIATES, INC.
Transportation Engineers
5808 Faringdon Place, Suite 100
Raleigh, North Carolina 27609
919-872-5115 Tel. 919-878-5416 Fax.
www.rameykemp.com
NC License No. C-0910

3/16/2016
...\Proj\84-001_TC_TCP_1.dgn
user:croque

DocuSign Envelope ID: 1899E4DF-E57B-43AE-A9F1-05553AC68CB5

PROJ. REFERENCE NO.	SHEET NO.
17BP.9.R.27	TMP-2

RAMEY KEMP & ASSOCIATES, INC.
Transportation Engineers
5808 Farlingdon Place, Suite 100
Raleigh, North Carolina 27609
919-872-5115 Tel. 919-878-5416 Fax.
www.rameykemp.com
NC License No. C-0910

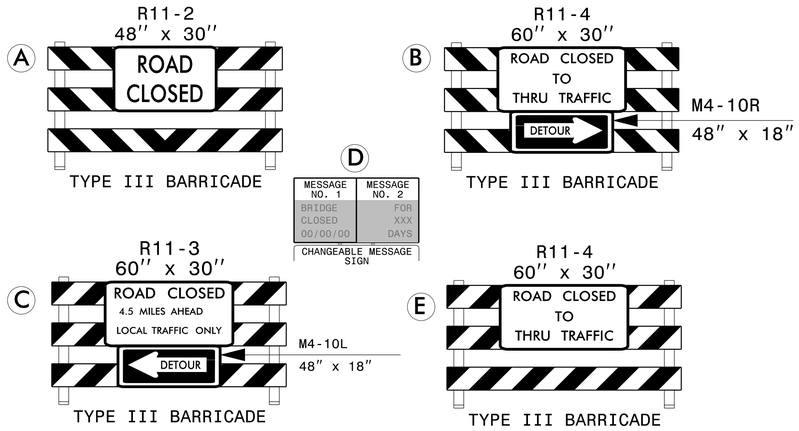

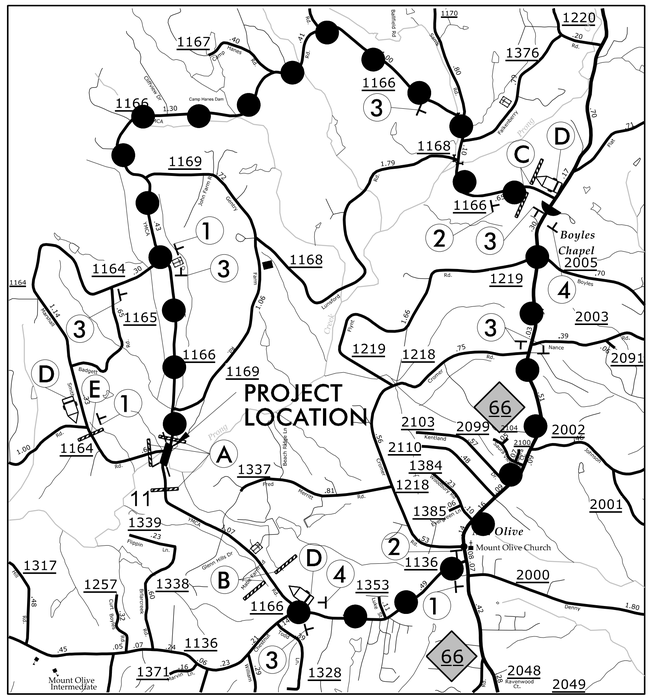

SEE ROADWAY STD. 1101.03 FOR ADDITIONAL ADVANCED WARNING SIGNS.

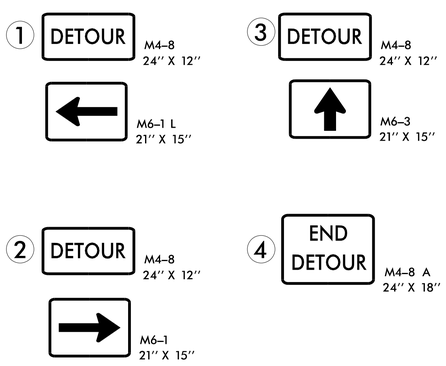

GENERAL NOTES

CHANGES MAY BE REQUIRED WHEN PHYSICAL DIMENSIONS IN THE DETAIL DRAWINGS, STANDARD DETAILS, AND ROADWAY DETAILS ARE NOT ATTAINABLE TO MEET FIELD CONDITIONS OR RESULT IN DUPLICATE OR UNDESIRED OVERLAPPING OF DEVICES. MODIFICATION MAY INCLUDE: MOVING, SUPPLEMENTING, COVERING, OR REMOVAL OF DEVICES AS DIRECTED BY THE ENGINEER.

THE FOLLOWING GENERAL NOTES APPLY AT ALL TIMES FOR THE DURATION OF THE CONSTRUCTION PROJECT EXCEPT WHEN OTHERWISE NOTED IN THE PLAN OR DIRECTED BY THE ENGINEER.

TRAFFIC PATTERN ALTERATIONS

A) NOTIFY THE ENGINEER TWENTY ONE (21) CALENDAR DAYS PRIOR TO ANY TRAFFIC PATTERN ALTERATION.

SIGNING

B) INSTALL ADVANCE WORK ZONE WARNING SIGNS WHEN WORK IS WITHIN 40 FT FROM THE EDGE OF TRAVEL LANE AND NO MORE THAN THREE (3) DAYS PRIOR TO THE BEGINNING OF CONSTRUCTION.

C) PROVIDE SIGNING AND DEVICES REQUIRED TO CLOSE THE ROAD ACCORDING TO THE ROADWAY STANDARD DRAWINGS AND TRAFFIC CONTROL PLANS.

PROVIDE SIGNING REQUIRED FOR THE OFF-SITE DETOUR ROUTE AS SHOWN IN THE TRAFFIC CONTROL PLANS.

D) COVER OR REMOVE ALL SIGNS AND DEVICES REQUIRED TO CLOSE THE ROAD WHEN ROAD CLOSURE IS NOT IN OPERATION.

COVER OR REMOVE ALL SIGNS REQUIRED FOR THE OFF-SITE DETOUR WHEN THE DETOUR IS NOT IN OPERATION.

E) ENSURE ALL NECESSARY SIGNING IS IN PLACE PRIOR TO ALTERING ANY TRAFFIC PATTERN.

TRAFFIC CONTROL DEVICES

F) PLACE TYPE III BARRICADES, WITH "ROAD CLOSED" SIGN R11-2 ATTACHED, OF SUFFICIENT LENGTH TO CLOSE ENTIRE ROADWAY.

G) INSTALL PERMANENT PAVEMENT MARKINGS AND MARKERS ON THE FINAL SURFACE AS FOLLOWS: SEE SHEET PMP-1.

ROAD NAME	MARKING	MARKER
SR 1166	PAINT	NONE

H) TIE PROPOSED PAVEMENT MARKING LINES TO EXISTING PAVEMENT MARKING LINES.

I) REMOVE/REPLACE ANY CONFLICTING/DAMAGED PAVEMENT MARKINGS AND MARKERS.

J) PASSING ZONE WILL BE DETERMINED IN THE FIELD AND MUST BE APPROVED BY THE ENGINEER.

PHASING

PHASE I

PRIOR TO ANY CONSTRUCTION OPERATIONS, PLACE AND COVER OFF-SITE DETOUR SIGNING AS SHOWN ON TMP-2 AND IN ACCORDANCE WITH RSD 1101.03 (SHEET 1 OF 9). PLACE CMS AND ACTIVATE AT LEAST TWO WEEKS PRIOR TO CLOSING -L- (YMCA CAMP ROAD).

PHASE II

USING OFF-SITE DETOUR, UNCOVER DETOUR SIGNS, CLOSE -L- (SR 1166) YMCA CAMP RD. AND -Y- (SR 1164) MARSHALL SMITH RD. AT INTERSECTION TO TRAFFIC AND CONSTRUCT BRIDGE, APPROACHES AND ROADWAY UP TO AND INCLUDING FINAL LAYER OF SURFACE COURSE.

PHASE III

UPON COMPLETION OF BRIDGE, APPROACHES AND ROADWAY, PLACE FINAL PAVEMENT MARKINGS, GUARDRAIL DELINEATORS AND OBJECT MARKERS IN ACCORDANCE WITH RSD STDS. 1205,1261,1262, AND 1264. REMOVE CMS, BARRICADES AND DETOUR SIGNS AND OPEN -L- (SR 1166) YMCA CAMP RD. AND -Y- (SR 1164) MARSHALL SMITH RD. TO TRAFFIC.

PROPOSE DETOUR

DETOUR ROUTE

DETOUR LENGTH 7.5 MILES

DOCUMENT NOT CONSIDERED FINAL UNLESS ALL SIGNATURES COMPLETED

APPROVED: DocuSigned by: Claudette M. K. Roque DATE: 3/16/2016

SEAL

NORTH CAROLINA PROFESSIONAL SEAL 17306 ENGINEER CLAUDETTE M.K. ROQUE

DIVISION OF HIGHWAYS STATE OF NORTH CAROLINA DEPARTMENT OF TRANSPORTATION WORK ZONE TRAFFIC CONTROL

TRANSPORTATION OPERATIONS PLAN

3/16/2016
...\Proj\84-0011_TC_TCP_2.dgn
User:rcroque

DocuSign Envelope ID: 1899E4DF-E57B-43AE-A9F1-05553AC68CB5

PROJECT: 17BP.9.R.27

CONTRACT: DI00125

TIP NO.	SHEET NO.
17BP.9.R.27	PMP-1

APPROVED: DocuSigned by: Claudette M. K. Roque 4BB3927205CC441...

DATE: 3/16/2016

SEAL

NORTH CAROLINA PROFESSIONAL SEAL 17306 ENGINEER CLAUDETTE M.K. ROQUE

DOCUMENT NOT CONSIDERED FINAL UNLESS ALL SIGNATURES COMPLETED

STATE OF NORTH CAROLINA
DEPARTMENT OF TRANSPORTATION

PAVEMENT MARKING PLAN

STOKES COUNTY

LOCATION: REPLACE BRIDGE NO. 11 OVER EAST PRONG CREEK ON SR 1166 (YMCA CAMP ROAD)

ROADWAY STANDARD DRAWING

THE FOLLOWING ROADWAY STANDARDS AS APPEAR IN "ROADWAY STANDARD DRAWINGS" - PROJECT SERVICES UNIT - N.C. DEPARTMENT OF TRANSPORTATION - RALEIGH, N.C., DATED JANUARY 2012 ARE APPLICABLE TO THIS PROJECT AND BY REFERENCE HEREBY ARE CONSIDERED A PART OF THESE PLANS:

STD. NO.	TITLE
1205.01	PAVEMENT MARKINGS - LINE TYPES AND OFFSETS
1205.02	PAVEMENT MARKINGS - TWO LANE AND MULTILANE ROADWAYS
1205.04	PAVEMENT MARKINGS - INTERSECTIONS
1205.12	PAVEMENT MARKINGS - BRIDGES
1261.01	GUARDRAIL AND BARRIER DELINEATORS - INSTALLATION SPACING
1261.02	GUARDRAIL AND BARRIER DELINEATORS - TYPES AND MOUNTING
1262.01	GUARDRAIL END DELINEATION
1264.01	OBJECT MARKERS - TYPES
1264.02	OBJECT MARKERS - INSTALLATION

PAVEMENT MARKING DETAIL

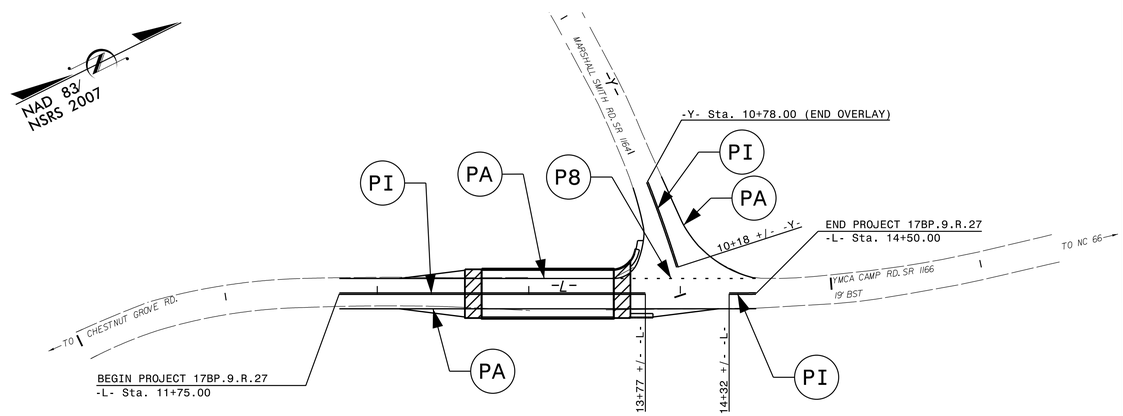

GENERAL NOTES

THE FOLLOWING GENERAL NOTES APPLY AT ALL TIMES FOR THE DURATION OF THE CONSTRUCTION PROJECT, EXCEPT WHEN OTHERWISE NOTED IN THE PLAN, OR DIRECTED BY THE ENGINEER.

A) INSTALL PAVEMENT MARKINGS AND PAVEMENT MARKERS ON THE FINAL SURFACE AS FOLLOWS:

ROAD NAME	MARKING	MARKER
ALL	PAINT	NONE

B) TIE PROPOSED PAVEMENT MARKING LINES TO EXISTING PAVEMENT MARKING LINES.

C) REMOVE/REPLACE ANY CONFLICTING/DAMAGED PAVEMENT MARKINGS AND MARKERS.

D) STOP BAR LOCATION AT NON-SIGNALIZED INTERSECTIONS MAY BE ADJUSTED AS DIRECTED BY THE ENGINEER.

E) REMOVE ALL RESIDUE AND SURFACE LAITANCE BY ACCEPTABLE METHODS ON THE BRIDGE DECK PRIOR TO PLACING PAINT PAVEMENT MARKING MATERIAL.

F) REMOVE ALL EXISITNG BRIDGE MARKER SIGNS AND DISPOSE OF IN A LEGAL MANNER.

G) REMOVE AND RESET EXISTING STOP SIGN, STREET SIGN AND DOUBLE ARROW SIGN.

H) PLACE GUARDRAIL DELINEATORS PER NCDOT STANDARDS.

PAVEMENT MARKING SCHEDULE

SYMBOL	DESCRIPTION
	PAINT(4")
P8	2' - 6'/SP WHITE MINISKIP (4")
PA	WHITE EDGELINE
PI	YELLOW DOUBLE CENTER

INDEX

SHEET NO.	DESCRIPTION
PMP-1	PAVEMENT MARKING PLAN TITLE SHEET AND PAVEMENT MARKING SCHEDULE AND PAVEMENT MARKING DETAILS

PLAN PREPARED BY: Ramey Kemp & Associates

CLAUDETTE M.K. ROQUE, P.E. — PROJECT ENGINEER

LUCAS HELMS, P.E. — PROJECT DESIGN ENGINEER

RAMEY KEMP & ASSOCIATES, INC.
Transportation Engineers
5808 Faringdon Place, Suite 100
Raleigh, North Carolina 27609
919-872-5115 Tel. 919-878-5416 Fax.
www.rameykemp.com

PROJ. REFERENCE NO.	SHEET NO.
17BP.9.R.27	X-1A

STATE OF NORTH CAROLINA
DIVISION OF HIGHWAYS

NOTE: EMBANKMENT COLUMN DOES NOT INCLUDE BACKFILL FOR UNDERCUT

CROSS-SECTION SUMMARY

Station L (SR 1166)	Uncl. Exc. (cu. yd.)	Embt (cu. yd.)	Station	Uncl. Exc. (cu. yd.)	Embt (cu. yd.)	Station PHASE 3	Uncl. Exc. (cu. yd.)	Embt (cu. yd.)
11+75.00	0	0						
12+00.00	0	27						
12+50.00	0	143						
BEG BRIDGE LIMITS (NOT SHOWN)								
12+57.87	7	20						
12+68.87	19	12						
12+86.50	29	5						
13+00.00	11	0						
13+56.12	0	0						
13+63.61	0	14						
13+67.12	0	3						
13+75.90	4	6						
END BRIDGE LIMITS (NOT SHOWN)								
14+00.00	15	12						
14+50.00	9	12						

Approximate quantities only. Unclassified excavation, borrow excavation, fine grading, clearing and grubbing, and removal of existing pavement will be paid for at the lump sum price for "Grading".

0 5 10	PROJ. REFERENCE NO.	SHEET NO.
	17BP.9.R.27	X-1

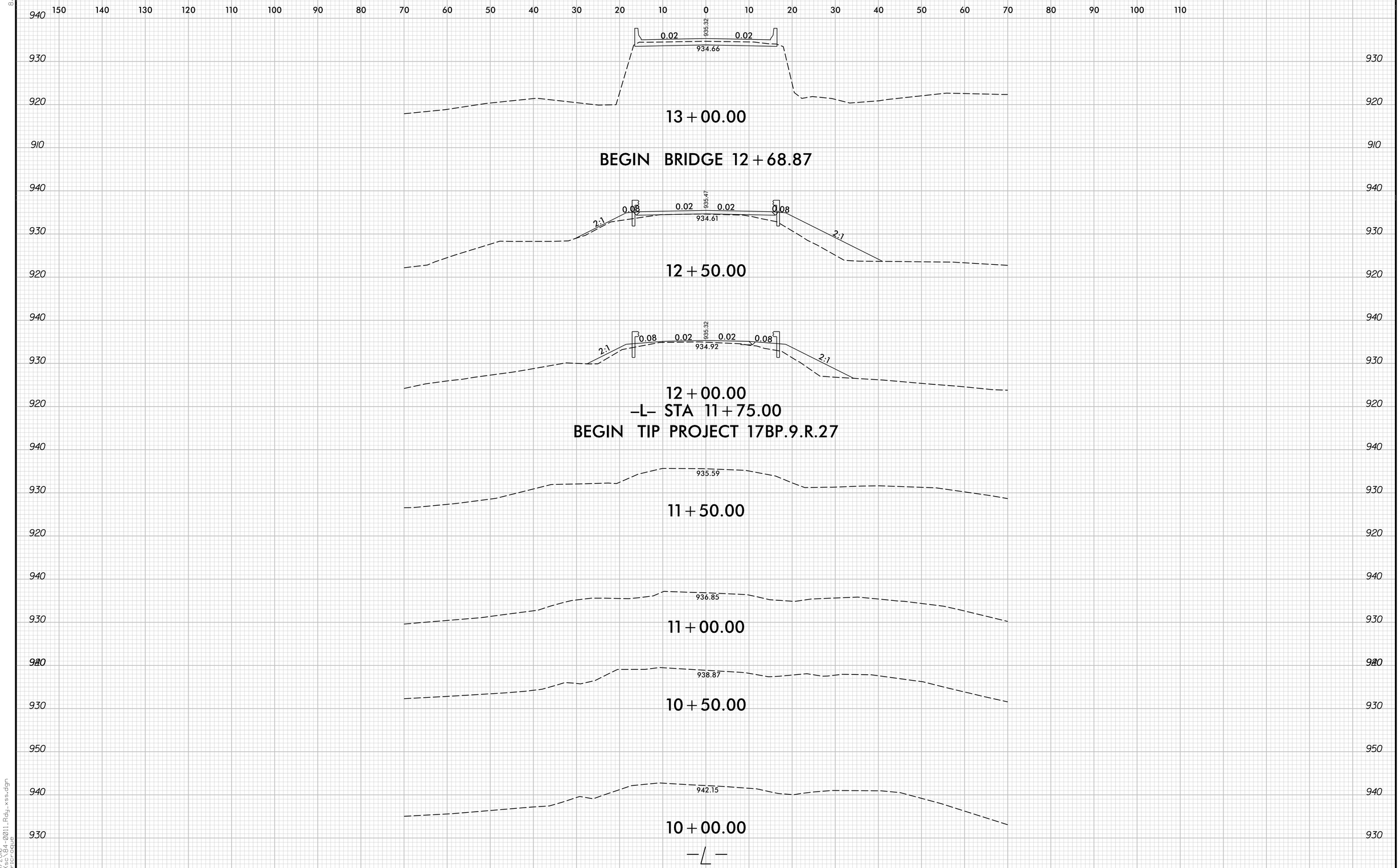

8/23/99

3/16/2016
...\Xsc\B4-0011_Rdy_xss.dgn
User:rcroque

0 5 10	PROJ. REFERENCE NO.	SHEET NO.
	17BP.9.R.27	X-2

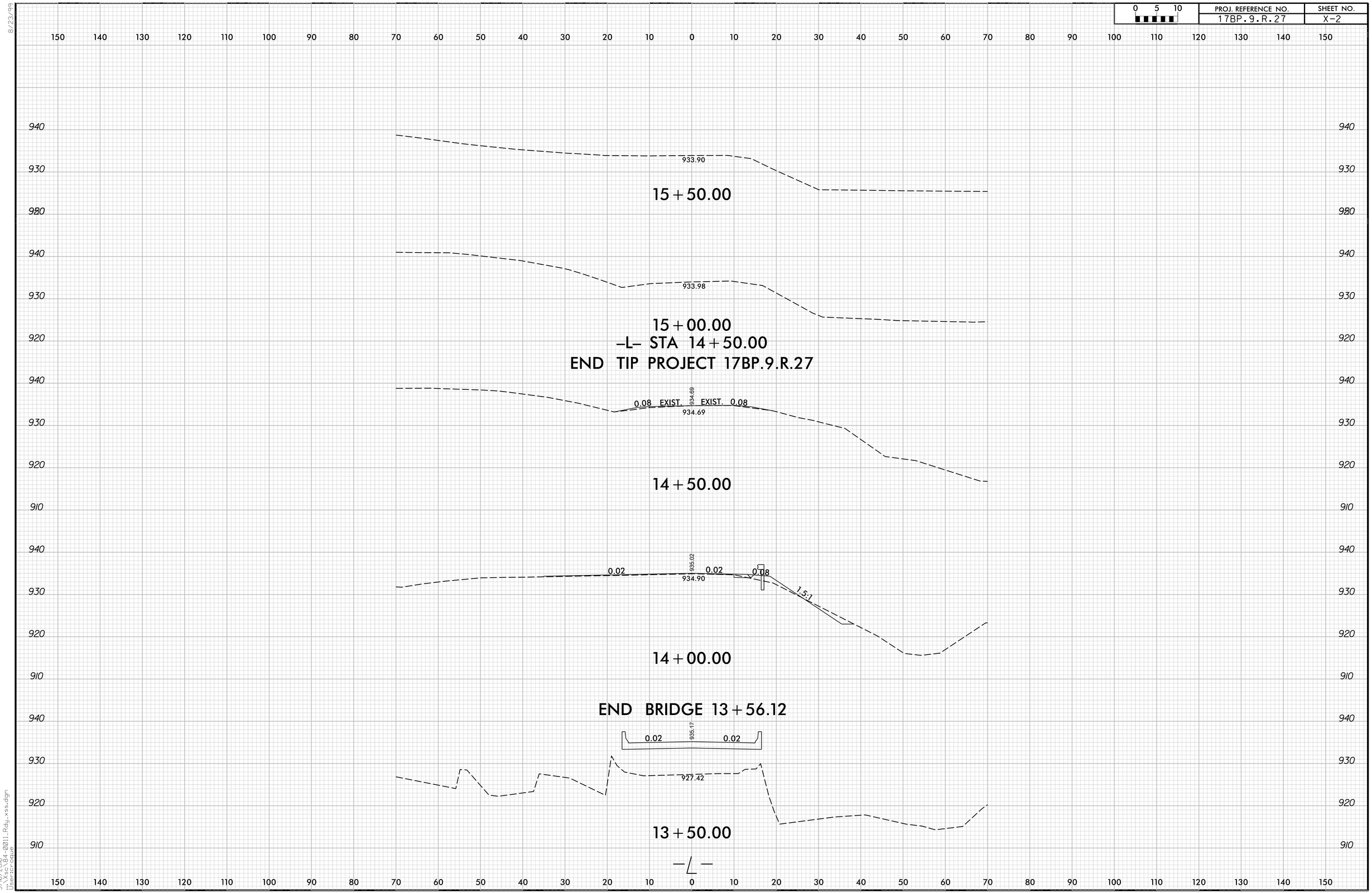

8/23/99

3/16/2016
...\Xsc\84-0011_Rdy_xs.dgn
User:roque

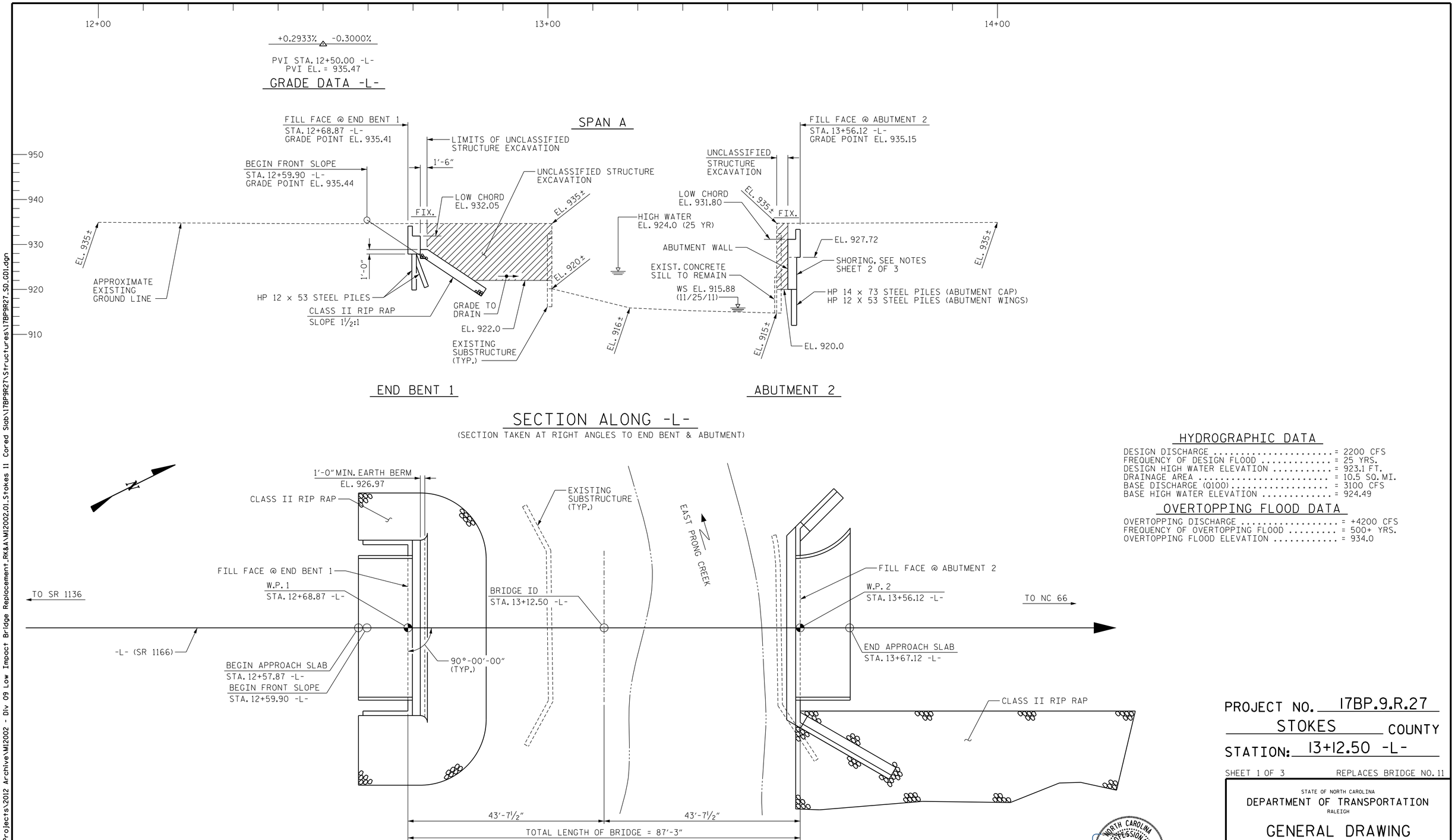

HYDROGRAPHIC DATA

DESIGN DISCHARGE ..... = 2200 CFS
FREQUENCY OF DESIGN FLOOD ..... = 25 YRS.
DESIGN HIGH WATER ELEVATION ..... = 923.1 FT.
DRAINAGE AREA ..... = 10.5 SQ. MI.
BASE DISCHARGE (Q100) ..... = 3100 CFS
BASE HIGH WATER ELEVATION ..... = 924.49

OVERTOPPING FLOOD DATA

OVERTOPPING DISCHARGE ..... = +4200 CFS
FREQUENCY OF OVERTOPPING FLOOD ..... = 500+ YRS.
OVERTOPPING FLOOD ELEVATION ..... = 934.0

PROJECT NO. 17BP.9.R.27
STOKES COUNTY
STATION: 13+12.50 -L-

SHEET 1 OF 3 REPLACES BRIDGE NO. 11

STATE OF NORTH CAROLINA
DEPARTMENT OF TRANSPORTATION
RALEIGH

GENERAL DRAWING

FOR BRIDGE ON SR 1166 OVER
EAST PRONG CREEK
BETWEEN SR 1136 & NC 66

NORTH CAROLINA PROFESSIONAL SEAL 12323 ENGINEER MORRIS ISRAELNAIM
11/6/2015

MI ENGINEERING
1011 SCHAUB DRIVE, SUITE 100
RALEIGH, NC 27606
(919) 851-6606
FIRM PE NUMBER : P-0671

REVISIONS						
NO.	BY:	DATE:	NO.	BY:	DATE:	
1			3			
2			4			

SHEET NO. S-1
TOTAL SHEETS 21

DRAWN BY :	B.E. LANNING	DATE :	07/14
CHECKED BY :	P.A. de PAOLI	DATE :	07/14
DESIGN ENGINEER OF RECORD :	P.A. de PAOLI	DATE :	07/14

11/6/2015
11:21:42 AM
User: blanning
Filename: P:\NC Projects\2012 Archive\MI2002 - Div 09 Low Impact Bridge Replacement_RK&A\MI2002.01_Stokes 11 Cored Slab\17BP9R27\Structures\17BP9R27_SD_GD1.dgn

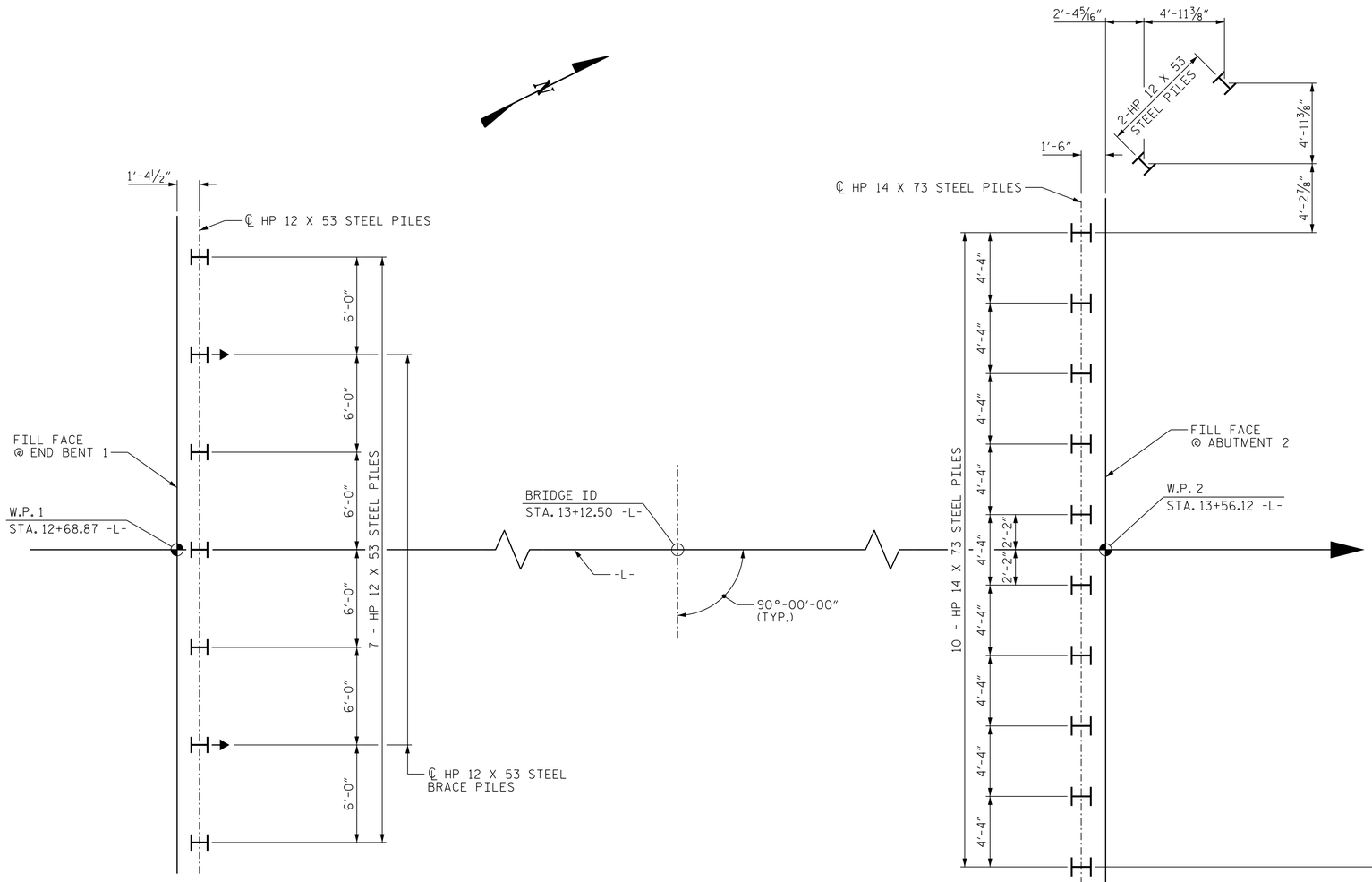

END BENT 1

ABUTMENT 2

FOUNDATION LAYOUT

DIMENSIONS LOCATING END BENT PILES ARE SHOWN TO CENTERLINE PILES.

INDICATES BRACE PILES TO BE BATTERED AT 3:12.

NOTES

FOR PILES, SEE SECTION 450 OF THE STANDARD SPECIFICATIONS.

PILES AT END BENT NO. 1 ARE DESIGNED FOR A FACTORED RESISTANCE OF 100 TONS PER PILE.

DRIVE PILES AT END BENT NO. 1 TO A REQUIRED DRIVING RESISTANCE OF 170 TONS PER PILE.

STEEL H-PILE POINTS ARE REQUIRED FOR STEEL H-PILES AT END BENT NO. 1. FOR STEEL PILE POINTS, SEE SECTION 450 OF THE STANDARD SPECIFICATIONS.

PILE EXCAVATION IS REQUIRED TO INSTALL PILES AT ABUTMENT NO. 2. EXCAVATE HOLES AT PILE LOCATIONS TO ELEVATION 912.0 FEET. FOR PILE EXCAVATION, SEE STANDARD 450 OF THE STANDARD SPECIFICATIONS.

CONCRETE OR GROUT IS REQUIRED TO FILL HOLES FOR PILE EXCAVATION AT ABUTMENT NO. 2.

WINGWALLS AT ABUTMENT NO. 2 SUPPORTED ON HP 12 X 53 STEEL PILES EXCAVATED TO ELEVATION 912.0 FEET.

SHORING FOR BRACED EXCAVATION WILL BE REQUIRED FOR CONSTRUCTION OF ABUTMENT WALL AT ABUTMENT NO. 2.

SHORING IS REQUIRED FOR CONSTRUCTION OF ABUTMENT 2 WALL AND ABUTMENT 2 AS SHOWN ON THE "ABUTMENT 2 PLANS AND DETAILS" SHEETS. THE SHORING SHALL BE DESIGNED BY THE CONTRACTOR AND APPROVED BY NCDOT PRIOR TO ABUTMENT EXCAVATION. ALL SHORING TYPES ARE REQUIRED TO LIMIT DISTURBANCE OF THE SOIL BEHIND THE PERMANENT ABUTMENT WALL. PAYMENT FOR THE SHORING SHALL BE CONSIDERED INCIDENTAL TO THE UNCLASSIFIED EXCAVATION.

PROJECT NO. 17BP.9.R.27

STOKES COUNTY

STATION: 13+12.50 -L-

SHEET 2 OF 3

STATE OF NORTH CAROLINA
DEPARTMENT OF TRANSPORTATION
RALEIGH

GENERAL DRAWING
FOR BRIDGE ON SR 1166 OVER
EAST PRONG CREEK
BETWEEN SR 1136 & NC 66

NORTH CAROLINA PROFESSIONAL SEAL 12323 ENGINEER MORRIS ISRAELNAIM
11/6/2015

MI ENGINEERING
1011 SCHAUB DRIVE, SUITE 100
RALEIGH, NC 27606
(919) 851-6606
FIRM PE NUMBER : P-0671

REVISIONS						
NO.	BY:	DATE:	NO.	BY:	DATE:	
1			3			
2			4			

SHEET NO. S-2
TOTAL SHEETS 21

DRAWN BY : B.E. LANNING DATE : 07/14
CHECKED BY : G.R. COLS DATE : 07/14
DESIGN ENGINEER OF RECORD : P.A. de PAOLI DATE : 07/14

11/6/2015
11:21:44 AM
User: blanning
Filename: P:\NC Projects\2012 Archive\MI2002 - Div 09 Low Impact Bridge Replacement_RK&A\MI2002.01_Stokes 11 Cored Slab\17BP9R27\Structures\17BP9R27_SD_GD2.dgn

B.M. #2: RR SPIKE SET IN BASE OF 24" OAK, 36.34' RT. OF STA. 9+47.91 -L-, EL. 945.11

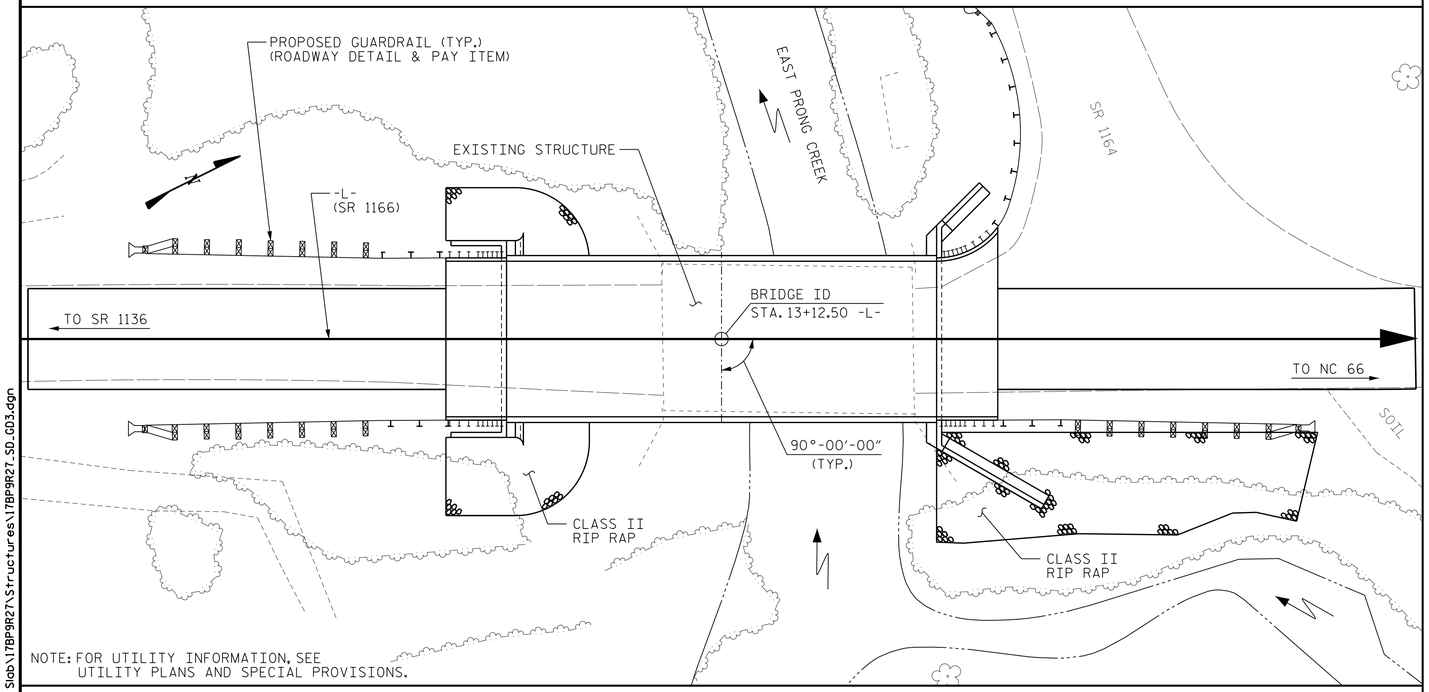

NOTE: FOR UTILITY INFORMATION, SEE UTILITY PLANS AND SPECIAL PROVISIONS.

LOCATION SKETCH

NOTES

ASSUMED LIVE LOAD = HL-93 OR ALTERNATE LOADING.

FOR OTHER DESIGN DATA AND GENERAL NOTES, SEE SHEET SN.

FOR EROSION CONTROL MEASURES SEE EROSION CONTROL PLANS.

THIS BRIDGE HAS BEEN DESIGNED IN ACCORDANCE WITH THE REQUIREMENTS OF THE AASHTO LRFD BRIDGE DESIGN SPECIFICATIONS.

THIS BRIDGE IS LOCATED IN SEISMIC ZONE 1.

THE EXISTING STRUCTURE CONSISTING OF ONE (1) SPAN @ 50'-6", WITH TIMBER DECK ON I-BEAMS AND A CLEAR ROADWAY WIDTH OF 24'-5" ON TIMBER CAPS WITH TIMBER PILES, AND CONCRETE ENCASED TIMBER BULKHEADS AND LOCATED AT THE SITE OF THE PROPOSED STRUCTURE SHALL BE REMOVED. EXISTING CONCRETE SILL AT ABUTMENT 2 TO REMAIN. H-PILE AND SHORING SYSTEM AT ABUTMENT 2 SHALL BE INSTALLED BEFORE REMOVING EXISTING STRUCTURE.

REMOVAL OF THE EXISTING BRIDGE SHALL BE PERFORMED SO AS TO NOT ALLOW DEBRIS TO FALL INTO THE WATER. THE CONTRACTOR SHALL SUBMIT DEMOLITION PLANS FOR REVIEW AND REMOVE THE BRIDGE IN ACCORDANCE WITH ARTICLE 402-2 OF THE STANDARD SPECIFICATIONS.

THE MATERIAL SHOWN IN THE CROSS-HATCHED AREA SHALL BE EXCAVATED FOR A DISTANCE OF 30 FT. EACH SIDE OF THE CENTERLINE ROADWAY AS DIRECTED BY THE ENGINEER. THIS WORK WILL BE PAID FOR AT THE CONTRACT LUMP SUM PRICE FOR UNCLASSIFIED STRUCTURE EXCAVATION. SEE SECTION 412 OF THE STANDARD SPECIFICATIONS.

THE SUBSTRUCTURE OF THE EXISTING BRIDGE INDICATED ON THE PLANS IS FROM THE BEST INFORMATION AVAILABLE. THIS INFORMATION IS SHOWN FOR THE CONVENIENCE OF THE CONTRACTOR. THE CONTRACTOR SHALL HAVE NO CLAIM WHATSOEVER AGAINST THE DEPARTMENT OF TRANSPORTATION FOR ANY DELAYS OR ADDITIONAL COST INCURRED BASED ON THE DIFFERENCES BETWEEN THE EXISTING BRIDGE SUBSTRUCTURE SHOWN ON THE PLANS AND THE ACTUAL CONDITIONS AT THE PROJECT SITE.

INASMUCH AS THE PAINT SYSTEM ON THE EXISTING STRUCTURAL STEEL CONTAINS LEAD, THE CONTRACTOR'S ATTENTION IS DIRECTED TO ARTICLE 107-1 OF THE STANDARD SPECIFICATIONS. ANY COSTS RESULTING FROM COMPLIANCE WITH APPLICABLE STATE OR FEDERAL REGULATIONS PERTAINING TO HANDLING OF MATERIALS CONTAINING LEAD BASED PAINT SHALL BE INCLUDED IN THE BID PRICE FOR "REMOVAL OF EXISTING STRUCTURE AT STATION 13+12.50 -L-".

ASPHALT WEARING SURFACE IS INCLUDED IN ROADWAY QUANTITY ON ROADWAY PLANS.

THIS STRUCTURE HAS BEEN DESIGNED IN ACCORDANCE WITH "HEC 18, EVALUATING SCOUR AT BRIDGES."

FOR FALSEWORK AND FORMWORK, SEE SPECIAL PROVISIONS.

FOR SUBMITTAL OF WORKING DRAWINGS, SEE SPECIAL PROVISIONS.

FOR CRANE SAFETY, SEE SPECIAL PROVISIONS.

FOR GROUT FOR STRUCTURES, SEE SPECIAL PROVISIONS.

FOR ASBESTOS ASSESSMENT, SEE SPECIAL PROVISIONS.

TOTAL BILL OF MATERIAL

	REMOVAL OF EXISTING STRUCTURE	PILE EXCAVATION IN SOIL	PILE EXCAVATION NOT IN SOIL	UNCLASSIFIED STRUCTURE EXCAVATION	CLASS A CONCRETE	BRIDGE APPROACH SLABS	REINFORCING STEEL	HP 12 X 53 STEEL PILES		HP 14 X 73 STEEL PILES		STEEL PILE POINTS	VERTICAL CONCRETE BARRIER RAIL	RIP RAP CLASS II (2'-0" THICK)	GEOTEXTILE FOR DRAINAGE	ELASTOMERIC BEARINGS	3'-0" x 2'-9" PRESTRESSED CONCRETE BOX BEAMS		ASBESTOS ASSESSMENT
	LUMP SUM	LIN. FT.	LIN. FT.	LUMP SUM	CU. YDS.	LUMP SUM	LBS.	NO.	LIN. FT.	NO.	LIN. FT.	EACH	LIN. FT.	TONS	SQ. YDS.	LUMP SUM	NO.	LIN. FT.	LUMP SUM
SUPERSTRUCTURE													170.00			LUMP SUM	11	935.00	
END BENT 1				LUMP SUM	25.5		3576	7	84			7		149	166				
ABUTMENT 2		116.0	128.0	LUMP SUM	83.6		8054	6	93	10	176			157	175				
TOTAL	LUMP SUM	116.0	128.0	LUMP SUM	109.1	LUMP SUM	11630	13	177	10	176	7	170.00	306	341	LUMP SUM	11	935.00	LUMP SUM

PROJECT NO. 17BP.9.R.27

STOKES COUNTY

STATION: 13+12.50 -L-

SHEET 3 OF 3

NORTH CAROLINA PROFESSIONAL SEAL 12323 ENGINEER MORRIS ISRAELNAIM

3/1/2016

STATE OF NORTH CAROLINA
DEPARTMENT OF TRANSPORTATION
RALEIGH

GENERAL DRAWING

FOR BRIDGE ON SR 1166 OVER
EAST PRONG CREEK
BETWEEN SR 1136 & NC 66

MI ENGINEERING
1011 SCHAUB DRIVE, SUITE 100
RALEIGH, NC 27606
(919) 851-6606
FIRM PE NUMBER : P-0671

REVISIONS						SHEET NO.
NO.	BY:	DATE:	NO.	BY:	DATE:	S-3
1			3			TOTAL SHEETS
2			4			21

DRAWN BY : B.E. LANNING DATE : 07/14
CHECKED BY : G.R. COLS DATE : 07/14
DESIGN ENGINEER OF RECORD : P.A. de PAOLI DATE : 07/14

3/1/2016
10:00:34 AM
User: blanning
Filename: P:\NC Projects\2012 Archive\MI2002 - Div 09 Low Impact Bridge Replacement_RK&A\MI2002.01_Stokes 11 Cored Slab\17BP9R27\Structures\17BP9R27_SD_GD3.dgn

LOAD AND RESISTANCE FACTOR RATING (LRFD) SUMMARY FOR PRESTRESSED CONCRETE GIRDERS

LEVEL		VEHICLE	WEIGHT (W) (TONS)	CONTROLLING LOAD RATING	MINIMUM RATING FACTORS (RF)	TONS = W X RF	STRENGTH I LIMIT STATE											SERVICE III LIMIT STATE						COMMENT NUMBER
								MOMENT					SHEAR						MOMENT					
							LIVELOAD FACTORS	DISTRIBUTION FACTORS (DF)	RATING FACTOR	SPAN	GIRDER LOCATION	DISTANCE FROM LEFT END OF SPAN (ft)	DISTRIBUTION FACTORS (DF)	RATING FACTOR	SPAN	GIRDER LOCATION	DISTANCE FROM LEFT END OF SPAN (ft)	LIVELOAD FACTORS	DISTRIBUTION FACTORS (DF)	RATING FACTOR	SPAN	GIRDER LOCATION	DISTANCE FROM LEFT END OF SPAN (ft)	
DESIGN LOAD RATING		HL-93(Inv)	N/A	1	1.401	--	1.75	0.273	1.73	A	EL	41.75	0.497	1.54	A	EL	8.35	0.80	0.273	**1.40**	A	EL	**41.75**	
		HL-93(Opr)	N/A	--	1.994	--	1.35	0.273	2.25	A	EL	41.75	0.497	1.99	A	EL	8.35	N/A	--	--	--	--	--	
		HS-20(Inv)	36.000	2	1.882	67.762	1.75	0.273	2.33	A	EL	41.75	0.497	1.99	A	EL	8.35	0.80	0.273	**1.88**	A	EL	**41.75**	
		HS-20(Opr)	36.000	--	2.584	93.027	1.35	0.273	3.02	A	EL	41.75	0.497	2.58	A	EL	8.35	N/A	--	--	--	--	--	
LEGAL LOAD RATING	SV	SNSH	13.500	--	4.355	58.789	1.4	0.273	6.74	A	EL	41.75	0.497	6.03	A	EL	8.35	0.80	0.273	4.35	A	EL	41.75	
		SNGARBS2	20.000	--	3.199	63.989	1.4	0.273	4.95	A	EL	41.75	0.497	4.26	A	EL	8.35	0.80	0.273	3.20	A	EL	41.75	
		SNAGRIS2	22.000	--	3.011	66.245	1.4	0.273	4.66	A	EL	41.75	0.497	3.94	A	EL	8.35	0.80	0.273	3.01	A	EL	41.75	
		SNCOTTS3	27.250	--	2.166	59.016	1.4	0.273	3.35	A	EL	41.75	0.497	3.01	A	EL	8.35	0.80	0.273	2.17	A	EL	41.75	
		SNAGGRS4	34.925	--	1.792	62.595	1.4	0.273	2.77	A	EL	41.75	0.497	2.47	A	EL	8.35	0.80	0.273	1.79	A	EL	41.75	
		SNS5A	35.550	--	1.754	62.349	1.4	0.273	2.71	A	EL	41.75	0.497	2.49	A	EL	8.35	0.80	0.273	1.75	A	EL	41.75	
		SNS6A	39.950	--	1.602	63.995	1.4	0.273	2.48	A	EL	41.75	0.497	2.27	A	EL	8.35	0.80	0.273	1.60	A	EL	41.75	
		SNS7B	42.000	--	1.525	64.059	1.4	0.273	2.36	A	EL	41.75	0.497	2.22	A	EL	8.35	0.80	0.273	1.53	A	EL	41.75	
	TTST	TNAGRIT3	33.000	--	1.951	64.392	1.4	0.273	3.02	A	EL	41.75	0.497	2.7	A	EL	8.35	0.80	0.273	1.95	A	EL	41.75	
		TNT4A	33.075	--	1.958	64.758	1.4	0.273	3.03	A	EL	41.75	0.497	2.64	A	EL	8.35	0.80	0.273	1.96	A	EL	41.75	
		TNT6A	41.600	--	1.594	66.309	1.4	0.273	2.47	A	EL	41.75	0.497	2.34	A	EL	8.35	0.80	0.273	1.59	A	EL	41.75	
		TNT7A	42.000	--	1.598	67.128	1.4	0.273	2.47	A	EL	41.75	0.497	2.3	A	EL	8.35	0.80	0.273	1.60	A	EL	41.75	
		TNT7B	42.000	--	1.645	69.07	1.4	0.273	2.54	A	EL	41.75	0.497	2.17	A	EL	8.35	0.80	0.273	1.64	A	EL	41.75	
		TNAGRIT4	43.000	--	1.571	67.556	1.4	0.273	2.43	A	EL	41.75	0.497	2.11	A	EL	8.35	0.80	0.273	1.57	A	EL	41.75	
		TNAGT5A	45.000	--	1.484	66.8	1.4	0.273	2.3	A	EL	41.75	0.497	2.08	A	EL	8.35	0.80	0.273	1.48	A	EL	41.75	
		TNAGT5B	45.000	3	1.469	66.118	1.4	0.273	2.27	A	EL	41.75	0.497	2	A	EL	8.35	0.80	0.273	**1.47**	A	EL	**41.75**	

LOAD FACTORS:

DESIGN LOAD RATING FACTORS	LIMIT STATE	γ_{DC}	γ_{DW}
	STRENGTH I	1.25	1.50
	SERVICE III	1.00	1.00

NOTES:

MINIMUM RATING FACTORS ARE BASED ON THE STRENGTH I AND SERVICE III LIMIT STATES.

ALLOWABLE STRESSES FOR SERVICE III LIMIT STATE ARE AS REQUIRED FOR DESIGN.

COMMENTS:

1.
2.
3.
4.

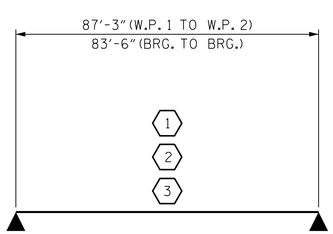

LRFR SUMMARY

(#) CONTROLLING LOAD RATING

(1) DESIGN LOAD RATING (HL-93)

(2) DESIGN LOAD RATING (HS-20)

(3) LEGAL LOAD RATING **

** SEE CHART FOR VEHICLE TYPE

GIRDER LOCATION

I - INTERIOR GIRDER
EL - EXTERIOR LEFT GIRDER
ER - EXTERIOR RIGHT GIRDER

PROJECT NO. 17BP.9.R.27
STOKES COUNTY
STATION: 13+12.50 -L-

NORTH CAROLINA PROFESSIONAL SEAL 12323 ENGINEER MORRIS ISRAELNAIM
11/6/2015

STATE OF NORTH CAROLINA
DEPARTMENT OF TRANSPORTATION
RALEIGH

STANDARD
LRFR SUMMARY FOR
85' BOX BEAM UNIT
90° SKEW
(NON-INTERSTATE TRAFFIC)

MI ENGINEERING
1011 SCHAUB DRIVE, SUITE 100
RALEIGH, NC 27606
(919) 851-6606
FIRM PE NUMBER : P-0671

REVISIONS						SHEET NO.
NO.	BY:	DATE:	NO.	BY:	DATE:	S-4
1			3			TOTAL SHEETS
2			4			21

STD. NO. 33LRFR1_90S_85L

ASSEMBLED BY:	J.S. ISRAELNAIM	DATE: 12/12
CHECKED BY :	B.E. ATKINSON	DATE: 12/12
DESIGN ENGINEER OF RECORD:	P.A. de PAOLI	DATE: 07/14
DRAWN BY :	TMG 11/11	
CHECKED BY :	AAC 11/11	

11/6/2015
11:21:48 AM
User: blanning
Filename: P:\NC Projects\2012 Archive\MI2002 - Div 09 Low Impact Bridge Replacement_RK&A\MI2002.01_Stokes 11 Cored Slab\17BP9R27\Structures\17BP9R27_SD_LRFR1.dgn

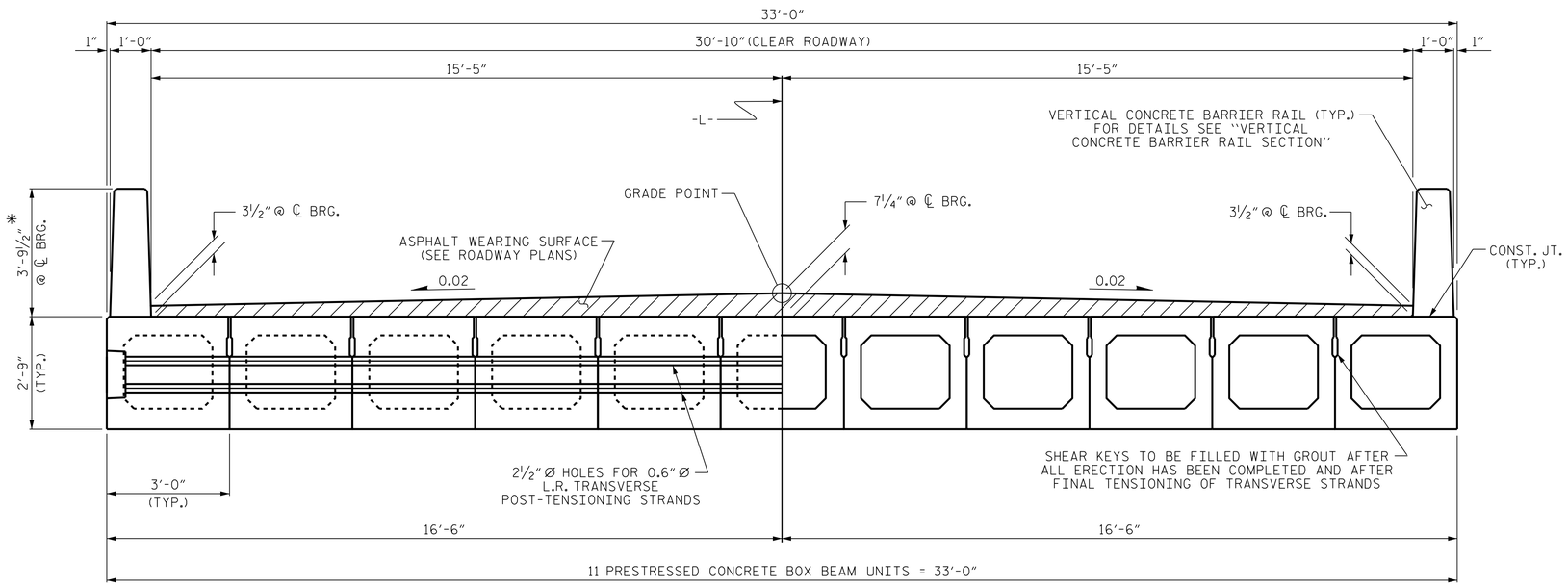

HALF SECTION
AT INTERMEDIATE DIAPHRAGMS

HALF SECTION
THROUGH VOIDS

TYPICAL SECTION

*THE MAXIMUM BARRIER RAIL HEIGHT AND ASPHALT THICKNESS IS SHOWN. THE HEIGHT OF THE BARRIER RAIL AND ASPHALT THICKNESS VARIES WHILE THE TOP OF THE BARRIER RAIL FOLLOWS THE PROFILE OF THE GUTTERLINE. FOR RAIL HEIGHT DETAILS AND ASPHALT THICKNESS, SEE THE "VERTICAL CONCRETE BARRIER RAIL SECTION" DETAIL.

FIXED END

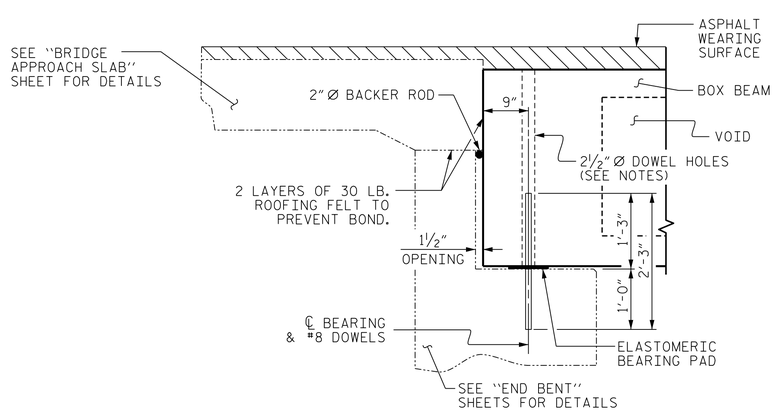

SECTION AT END BENT

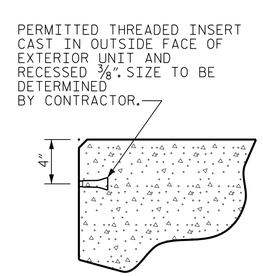

THREADED INSERT DETAIL

NOTES

ALL PRESTRESSING STRANDS SHALL BE 7-WIRE LOW RELAXATION GRADE 270 STRANDS AND SHALL CONFORM TO AASHTO M203 EXCEPT FOR SAMPLING REQUIREMENTS WHICH SHALL BE IN ACCORDANCE WITH THE STANDARD SPECIFICATIONS.

ALL REINFORCING STEEL CAST WITH THE BOX BEAM SECTIONS SHALL BE GRADE 60 AND SHALL BE INCLUDED IN THE UNIT PRICE BID FOR PRESTRESSED CONCRETE BOX BEAMS.

FLAME CUTTING OF THE TRANSVERSE POST-TENSIONING STRAND IS NOT ALLOWED.

RECESSES FOR TRANSVERSE STRANDS SHALL BE GROUTED AFTER THE TENSIONING OF THE STRANDS.

THE 2½" Ø DOWEL HOLES AT FIXED ENDS OF BOX BEAM SECTIONS SHALL BE FILLED WITH NON-SHRINK GROUT.

THE BACKER RODS SHALL CONFORM TO THE REQUIREMENTS OF TYPE M BOND BREAKER. SEE SECTION 1028 OF THE STANDARD SPECIFICATIONS.

THE TRANSFER OF LOAD FROM THE ANCHORAGES TO THE BOX BEAM UNIT SHALL BE DONE WHEN THE CONCRETE HAS REACHED A COMPRESSIVE STRENGTH OF NOT LESS THAN 6000 PSI.

ALL REINFORCING STEEL IN VERTICAL CONCRETE BARRIER RAILS SHALL BE EPOXY COATED.

PRESTRESSING STRANDS SHALL BE CUT FLUSH WITH THE BOX BEAM UNIT ENDS.

APPLY EPOXY PROTECTIVE COATING TO BOX BEAM UNIT ENDS.

VERTICAL GROOVED CONTRACTION JOINTS, ½" IN DEPTH, SHALL BE TOOLED IN ALL EXPOSED FACES OF THE BARRIER RAIL AND IN ACCORDANCE WITH ARTICLE 825-10(B) OF THE STANDARD SPECIFICATIONS. A VERTICAL CONTRACTION JOINT SHALL BE LOCATED AT EACH THIRD POINT BETWEEN BARRIER RAIL EXPANSION JOINTS. ONLY ONE CONTRACTION JOINT IS REQUIRED AT MIDPOINT OF BARRIER RAIL SEGMENTS LESS THAN 20 FEET IN LENGTH AND NO CONTRACTION JOINTS ARE REQUIRED FOR THOSE SEGMENTS LESS THAN 10 FEET IN LENGTH.

THE LOCATION OF THE VOID DRAINS MAY BE SHIFTED SLIGHTLY WHERE NECESSARY TO CLEAR PRESTRESSING STRANDS OR TRANSVERSE REINFORCING STEEL.

FOR GROUT FOR STRUCTURES, SEE SPECIAL PROVISIONS.

THE PERMITTED THREADED INSERTS ARE DETAILED AS AN OPTION FOR THE CONTRACTOR TO ATTACH FALSEWORK AND FORMWORK DURING CONSTRUCTION.

THE PERMITTED THREADED INSERTS IN THE EXTERIOR UNITS SHALL BE SIZED BY THE CONTRACTOR, SPACED AT 4'-0" CENTERS AND GALVANIZED IN ACCORDANCE WITH SECTION 1076 OF THE STANDARD SPECIFICATIONS. STAINLESS STEEL THREADED INSERTS MAY BE USED AS AN ALTERNATE.

THE PERMITTED THREADED INSERTS SHALL BE GROUTED BY THE CONTRACTOR IMMEDIATELY FOLLOWING REMOVAL OF THE FALSEWORK.

THE COST OF THE PERMITTED THREADED INSERTS SHALL BE INCLUDED IN THE PRICE BID FOR THE PRECAST UNITS.

PROJECT NO. 17BP.9.R.27
STOKES COUNTY
STATION: 13+12.50 -L-

SHEET 1 OF 5

STATE OF NORTH CAROLINA
DEPARTMENT OF TRANSPORTATION
RALEIGH

STANDARD

3'-0" X 2'-9"
PRESTRESSED CONCRETE
BOX BEAM UNIT

NORTH CAROLINA PROFESSIONAL SEAL 12323 ENGINEER MORRIS ISRAELNAIM
11/6/2015

MI ENGINEERING
1011 SCHAUB DRIVE, SUITE 100
RALEIGH, NC 27606
(919) 851-6606
FIRM PE NUMBER : P-0671

REVISIONS						SHEET NO.
NO.	BY:	DATE:	NO.	BY:	DATE:	S-5
1			3			TOTAL SHEETS
2			4			21

STD. NO. STD.33PCBB_33_90S

ASSEMBLED BY:	B.E. LANNING	DATE:	11/15
CHECKED BY :	B.E. ATKINSON	DATE:	11/15
DESIGN ENGINEER OF RECORD:	B.E. ATKINSON	DATE:	11/15
DRAWN BY : DGE 8/11	REV. 9/14	MAA/TMG	
CHECKED BY : TMG 11/11			

11/6/2015
11:21:50 AM
User: blanning
Filename: P:\NC Projects\2012 Archive\MI2002 - Div 09 Low Impact Bridge Replacement_RK&A\MI2002.01_Stokes 11 Cored Slab\17BP9R27_SD_BBU1.dgn

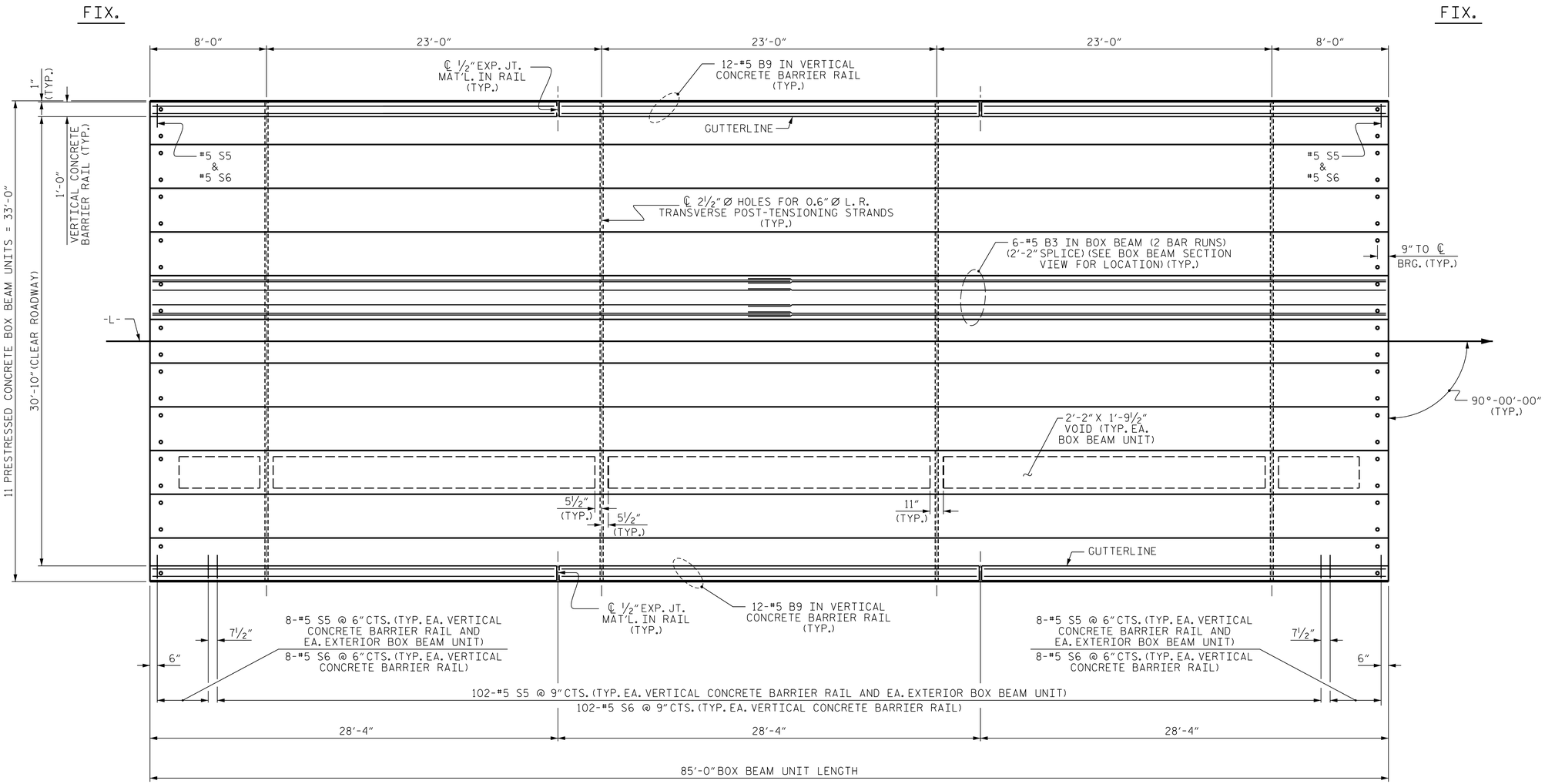

PLAN OF UNIT

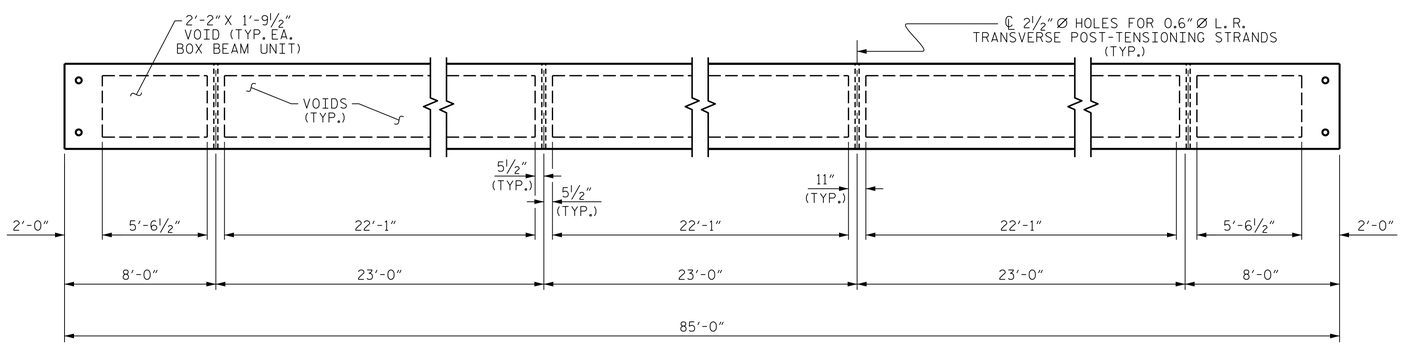

DIAPHRAGM AND VOID LAYOUT

PROJECT NO. 17BP.9.R.27

STOKES COUNTY

STATION: 13+12.50 -L-

SHEET 2 OF 5

STATE OF NORTH CAROLINA
DEPARTMENT OF TRANSPORTATION
RALEIGH

PLAN OF 85' UNIT 30'-10" CLEAR ROADWAY 90° SKEW

NORTH CAROLINA PROFESSIONAL SEAL 12323 ENGINEER MORRIS ISRAELNAIM

11/6/2015

MI ENGINEERING
1011 SCHAUB DRIVE, SUITE 100
RALEIGH, NC 27606
(919) 851-6606
FIRM PE NUMBER : P-0671

REVISIONS						
NO.	BY:	DATE:	NO.	BY:	DATE:	
1			3			
2			4			

SHEET NO. S-6

TOTAL SHEETS 21

ASSEMBLED BY:	B.E. LANNING	DATE:	11/15
CHECKED BY :	B.E. ATKINSON	DATE:	11/15
DESIGN ENGINEER OF RECORD:	B.E. ATKINSON	DATE:	11/15
DRAWN BY : DGE 8/11	REV. 8/14	MAA/TMG	
CHECKED BY : TMG 11/11			

STD.NO.33PCBB_33_90S_85L

11/6/2015
11:21:52 AM
User: blanning
Filename: P:\NC Projects\2012 Archive\MI2002 - Div 09 Low Impact Bridge Replacement_RK&A\MI2002.01_Stokes 11 Cored Slab\17BP9R27\Structures\17BP9R27_SD_BBU2.dgn

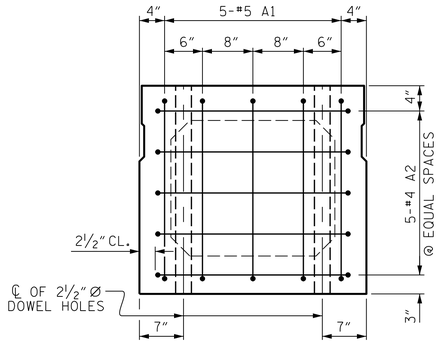

END ELEVATION

SHOWING PLACEMENT OF #5 & #4 "A" BARS AND LOCATION OF DOWEL HOLES. (INTERIOR BOX BEAM SECTION SHOWN-EXTERIOR SECTION SIMILAR EXCEPT SHEAR KEY LOCATION. STRAND LAYOUT NOT SHOWN.)

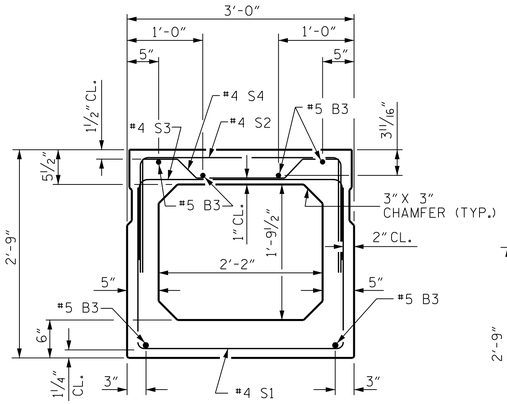

INTERIOR BOX BEAM SECTION

(STRAND LAYOUT NOT SHOWN)

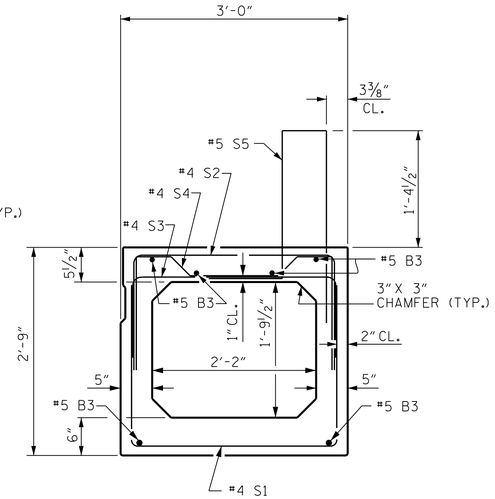

EXTERIOR BOX BEAM SECTION

(STRAND LAYOUT NOT SHOWN)

0.6" Ø LOW RELAXATION STRAND LAYOUT

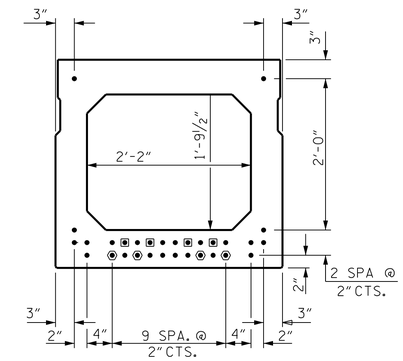

TYPICAL STRAND LOCATION

(30 STRANDS REQUIRED)

DEBONDING LEGEND

- ● FULLY BONDED STRANDS
- ▣ STRANDS DEBONDED FOR 4'-0" FROM END OF GIRDER
- ⬢ STRANDS DEBONDED FOR 12'-0" FROM END OF GIRDER

BOND SHALL BE BROKEN ON STRANDS AS SHOWN FOR THE SPECIFIED LENGTH FROM EACH END OF THE BOX BEAM. SEE STANDARD SPECIFICATIONS ARTICLE 1078-7.

BAR TYPES

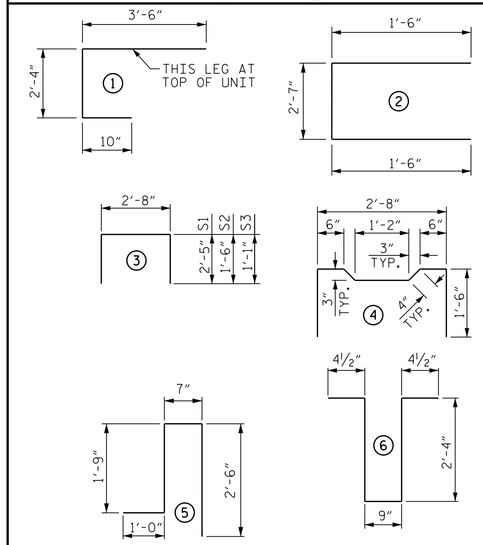

ALL BAR DIMENSIONS ARE OUT TO OUT

BILL OF MATERIAL FOR ONE BOX BEAM SECTION

BAR	NUMBER	SIZE	TYPE	EXTERIOR UNIT LENGTH	EXTERIOR UNIT WEIGHT	INTERIOR UNIT LENGTH	INTERIOR UNIT WEIGHT
A1	10	#5	1	6'-8"	70	6'-8"	70
A2	34	#4	2	5'-7"	127	5'-7"	127
B3	12	#5	STR	43'-5"	543	43'-5"	543
K1	12	#4	6	6'-2"	49	6'-2"	49
K2	8	#4	STR	2'-7"	14	2'-7"	14
S1	71	#4	3	7'-6"	356	7'-6"	356
S2	71	#4	3	5'-8"	269	5'-8"	269
S3	121	#4	3	4'-10"	391	4'-10"	391
S4	50	#4	4	5'-10"	195	5'-10"	195
✳ S5	118	#5	5	5'-10"	718	--	--
REINFORCING STEEL				2014 LBS.		2014 LBS.	
✳ EPOXY COATED REINF. STEEL				718 LBS.			
8000 P.S.I. CONCRETE				15.1 CU. YDS.		15.0 CU. YDS.	
0.6" Ø L.R. STRANDS				No. 30		No. 30	

GRADE 270 STRANDS

	0.6" Ø L.R.
AREA (SQUARE INCHES)	0.217
ULTIMATE STRENGTH (LBS. PER STRAND)	58,600
APPLIED PRESTRESS (LBS. PER STRAND)	43,950

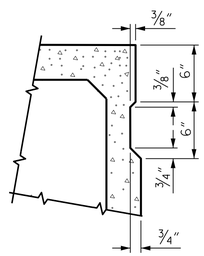

SHEAR KEY DETAIL

NOTE: OMIT SHEAR KEY ON OUTSIDE FACE OF EXTERIOR BOX BEAMS.

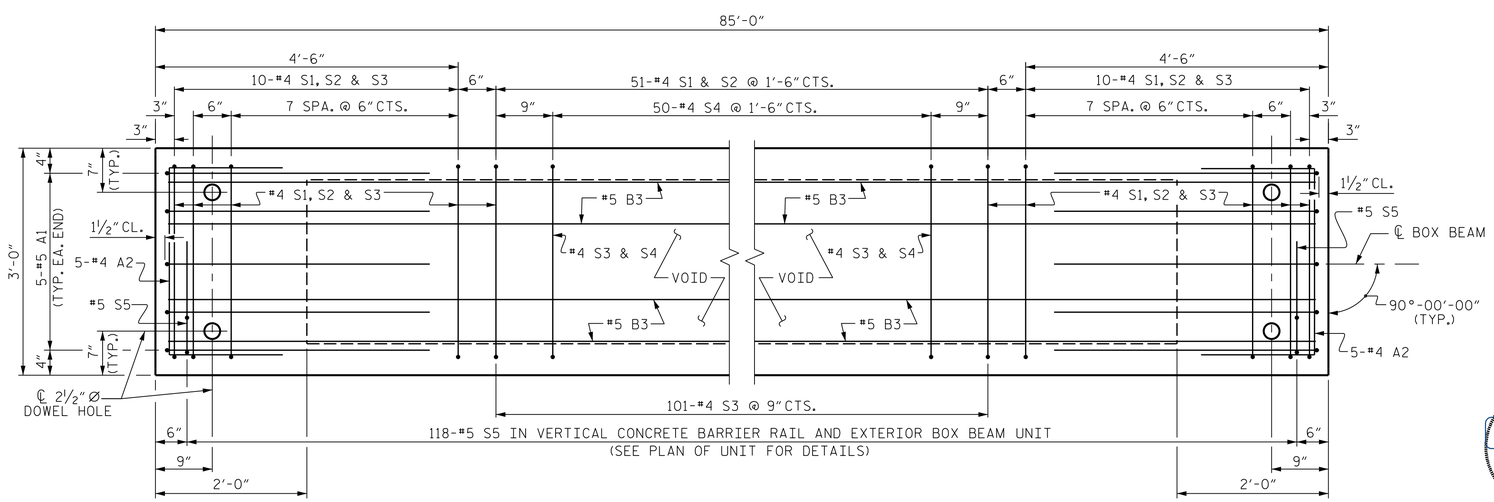

PLAN OF BOX BEAM

EXTERIOR UNIT SHOWN, INTERIOR UNIT SIMILAR EXCEPT OMIT #5 S5 BARS.
FOR LOCATION OF DIAPHRAGMS, SEE "PLAN OF UNIT".
FOR THREADED INSERTS, SEE "THREADED INSERT DETAIL".
FOR REINFORCING STEEL IN DIAPHRAGMS, SEE "DOUBLE DIAPHRAGM DETAILS".

PROJECT NO. 17BP.9.R.27
STOKES COUNTY
STATION: 13+12.50 -L-

SHEET 3 OF 5

STATE OF NORTH CAROLINA
DEPARTMENT OF TRANSPORTATION
RALEIGH
STANDARD

3'-0" X 2'-9"
PRESTRESSED CONCRETE
BOX BEAM UNIT

NORTH CAROLINA PROFESSIONAL SEAL 12323 ENGINEER MORRIS ISRAEL NAIM
11/6/2015

MI ENGINEERING
1011 SCHAUB DRIVE, SUITE 100
RALEIGH, NC 27606
(919) 851-6606
FIRM PE NUMBER : P-0671

REVISIONS						
NO.	BY:	DATE:	NO.	BY:	DATE:	
1			3			
2			4			

SHEET NO. S-7
TOTAL SHEETS 21

STD. NO. 33PCBB4_90S_85L

ASSEMBLED BY: B.E. LANNING		DATE: 11/15
CHECKED BY : B.E. ATKINSON		DATE: 11/15
DESIGN ENGINEER OF RECORD: B.E. ATKINSON		DATE: 11/15
DRAWN BY : DGE 10/11	REV. 9/14	MAA/TMG
CHECKED BY : TMG 11/11		

11/6/2015
11:21:54 AM
User: blanning
Filename: P:\NC Projects\2012 Archive\MI2002 - Div 09 Low Impact Bridge Replacement_RK&A\MI2002.01_Stokes 11 Cored Slab\17BP9R27\Structures\17BP9R27_SD_BBU3.dgn

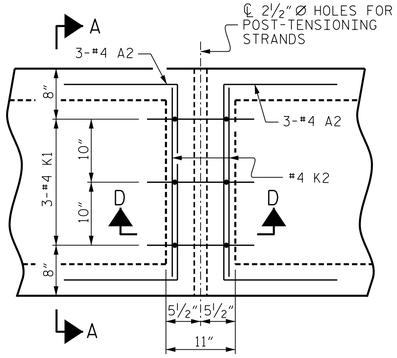

PLAN

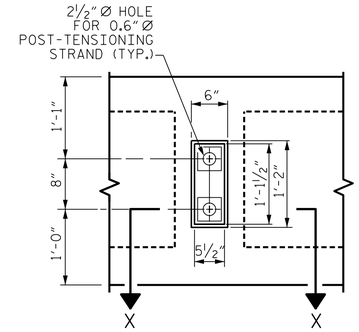

VIEW Y-Y

SHOWING ELEVATION VIEW OF GROUTED RECESS

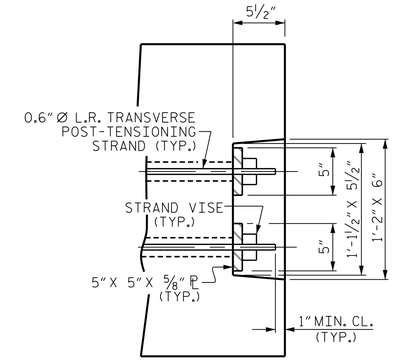

DETAIL "C"

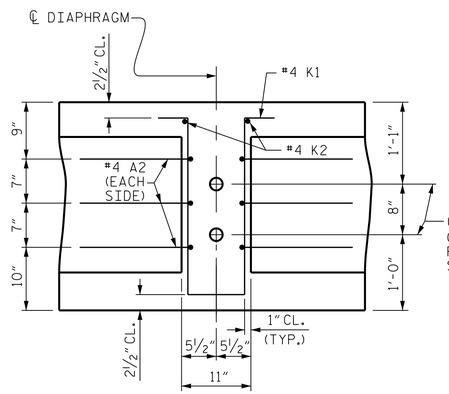

SECTION D-D

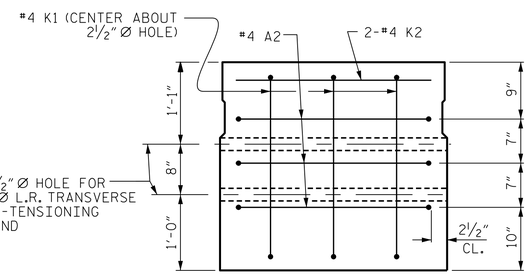

SECTION A-A

VOIDS NOT SHOWN

DOUBLE DIAPHRAGM DETAILS

#4 "S" BARS NOT SHOWN. #4 "S" BARS MAY BE SHIFTED SLIGHTLY TO CLEAR 2½" Ø HOLE.

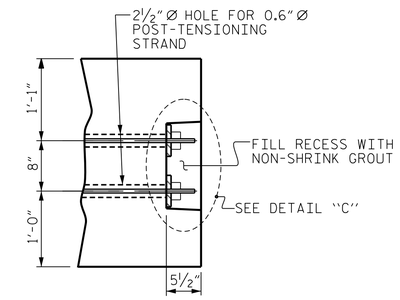

PART SECTION AT RECESS

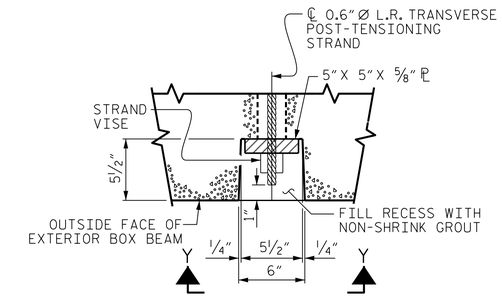

SECTION X-X

SHOWING PLAN VIEW OF GROUTED RECESS

GROUTED RECESS DETAIL AT END OF POST-TENSIONED STRANDS OF EXTERIOR BOX BEAM

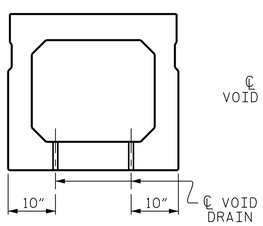

SECTION B-B

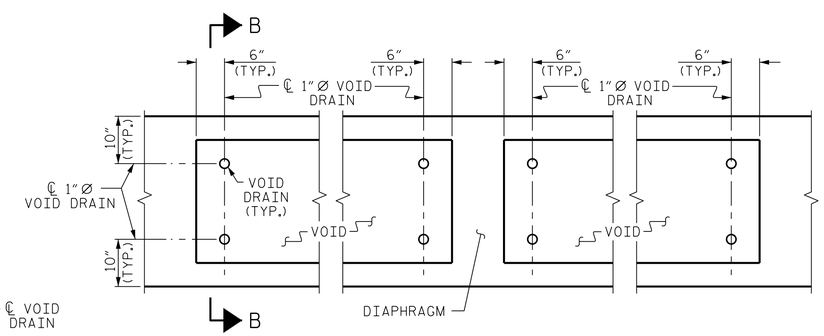

PART PLAN

VOID DRAIN DETAILS

(DIMENSIONS SHOWN ARE TYPICAL FOR EACH VOID)

DEAD LOAD DEFLECTION AND CAMBER	
	3'-0" x 2'-9"
85' BOX BEAM UNIT	0.6"Ø L.R. STRAND
CAMBER (SLAB ALONE IN PLACE)	2¾" ↑
DEFLECTION DUE TO SUPERIMPOSED DEAD LOAD **	¾" ↓
FINAL CAMBER	2" ↑

** INCLUDES FUTURE WEARING SURFACE

PROJECT NO. 17BP.9.R.27

STOKES COUNTY

STATION: 13+12.50 -L-

SHEET 4 OF 5

STATE OF NORTH CAROLINA
DEPARTMENT OF TRANSPORTATION
RALEIGH

STANDARD
3'-0" X 2'-9"
PRESTRESSED CONCRETE
BOX BEAM UNIT

NORTH CAROLINA PROFESSIONAL SEAL 12323 ENGINEER MORRIS ISRAELNAIM

11/6/2015

MI ENGINEERING
1011 SCHAUB DRIVE, SUITE 100
RALEIGH, NC 27606
(919) 851-6606
FIRM PE NUMBER : P-0671

REVISIONS						
NO.	BY:	DATE:	NO.	BY:	DATE:	
1			3			
2			4			

SHEET NO. S-8

TOTAL SHEETS 21

ASSEMBLED BY:	B.E. LANNING	DATE: 11/15
CHECKED BY :	B.E. ATKINSON	DATE: 11/15
DESIGN ENGINEER OF RECORD:	B.E. ATKINSON	DATE: 11/15
DRAWN BY : DGE 10/11	REV. 8/14	MAA/TMG
CHECKED BY : TMG 11/11		

STD.NO.33PCBB5_90S

11/6/2015
11:21:56 AM
User: blanning
Filename: P:\NC Projects\2012 Archive\MI2002 - Div 09 Low Impact Bridge Replacement_RK&A\MI2002.01.Stokes 11 Cored Slab\17BP9R27\Structures\17BP9R27_SD_BBU4.dgn

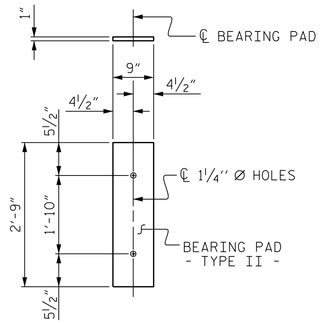

FIXED END
(TYPE II - 22 REQ'D.)

ELASTOMERIC BEARING DETAILS

ELASTOMER IN ALL BEARINGS SHALL BE 60 DUROMETER HARDNESS.

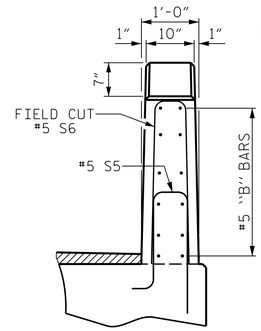

END VIEW

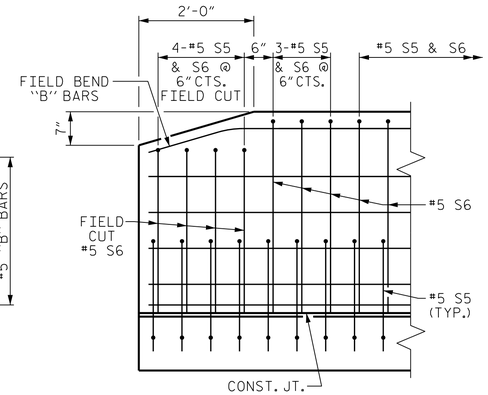

SIDE VIEW

END OF RAIL DETAILS

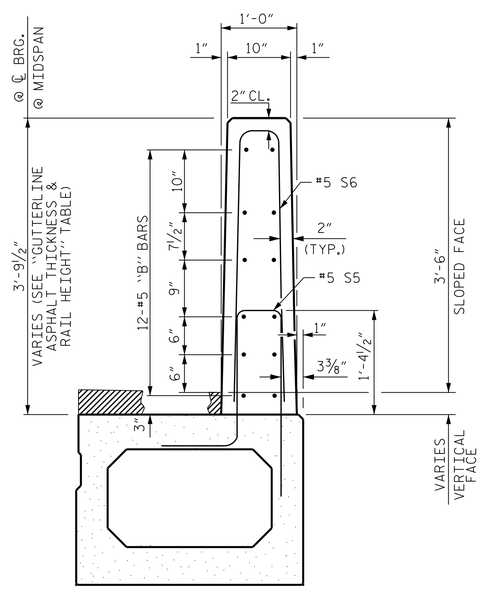

SECTION THRU RAIL

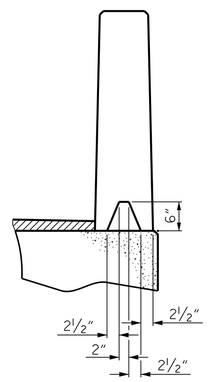

SECTION S-S
AT DAM IN OPEN JOINT
(THIS IS TO BE USED ONLY
WHEN SLIP FORM IS USED)

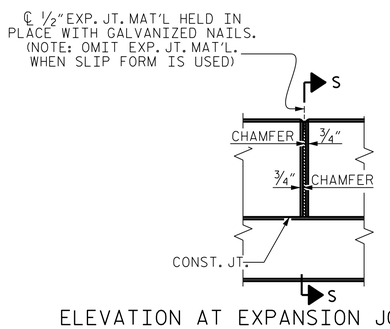

ELEVATION AT EXPANSION JOINTS

VERTICAL CONCRETE BARRIER RAIL DETAILS

BOX BEAM UNITS REQUIRED

	NUMBER	LENGTH	TOTAL LENGTH
EXTERIOR B.B.	2	85'-0"	170'-0"
INTERIOR B.B.	9	85'-0"	765'-0"
TOTAL	11	———	935'-0"

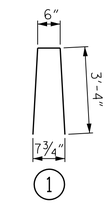

BAR TYPE
BAR DIMENSIONS ARE OUT TO OUT.

GUTTERLINE ASPHALT THICKNESS & RAIL HEIGHT

	ASPHALT OVERLAY THICKNESS @ MID-SPAN	RAIL HEIGHT @ MID-SPAN
85' UNITS	1½"	3'-7½"

BILL OF MATERIAL FOR VERTICAL CONCRETE BARRIER RAIL

BAR	BARS PER PAIR OF EXTERIOR UNITS	SIZE	TYPE	LENGTH	WEIGHT
	85' UNIT				
✳ B9	72	#5	STR	27'-11"	2096
✳ S6	236	#5	1	7'-2"	1764
✳ EPOXY COATED REINFORCING STEEL			LBS.		3860
CLASS AA CONCRETE			CU.YDS.		22.0
TOTAL VERTICAL CONCRETE BARRIER RAIL			LN. FT.		170.0

PROJECT NO. 17BP.9.R.27
STOKES COUNTY
STATION: 13+12.50 -L-

SHEET 5 OF 5

STATE OF NORTH CAROLINA
DEPARTMENT OF TRANSPORTATION
RALEIGH

3'-0" X 2'-9"
PRESTRESSED CONCRETE
BOX BEAM UNIT

NORTH CAROLINA PROFESSIONAL SEAL 12323 ENGINEER MORRIS ISRAELNAIM
11/6/2015

MI ENGINEERING
1011 SCHAUB DRIVE, SUITE 100
RALEIGH, NC 27606
(919) 851-6606
FIRM PE NUMBER : P-0671

REVISIONS						SHEET NO.
NO.	BY:	DATE:	NO.	BY:	DATE:	S-9
1			3			TOTAL SHEETS
2			4			21

ASSEMBLED BY:	B.E. LANNING	DATE:	11/15
CHECKED BY :	B.E. ATKINSON	DATE:	11/15
DESIGN ENGINEER OF RECORD:	B.E. ATKINSON	DATE:	11/15
DRAWN BY : DGE 10/11	REV. 4/15	MAA/TMG	
CHECKED BY : TMG 11/11			

STD. NO. 33PCBB8_90S

11/6/2015
11:21:57 AM
User: blanning
Filename: P:\NC Projects\2012 Archive\MI2002 - Div 09 Low Impact Bridge Replacement-RK&A\MI2002.01.Stokes 11 Cored Slab\17BP9R27\Structures\17BP9R27_SD_BBU5.dgn

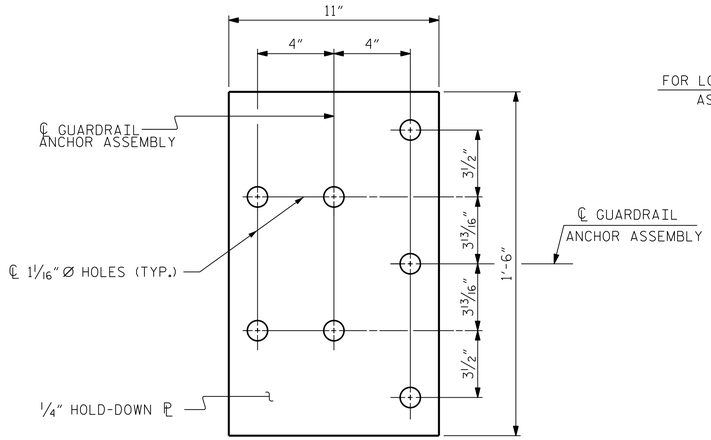

PLAN

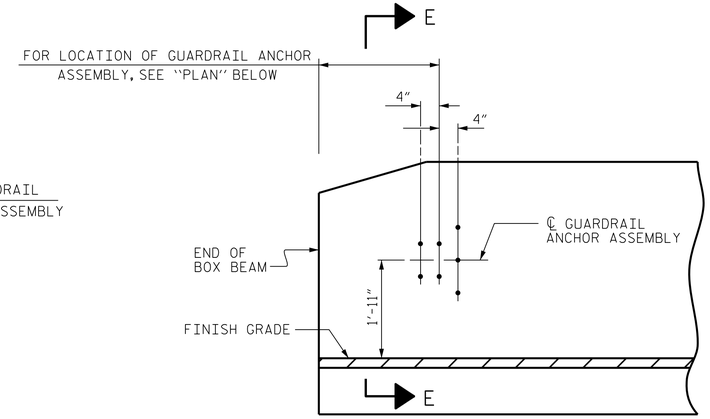

ELEVATION

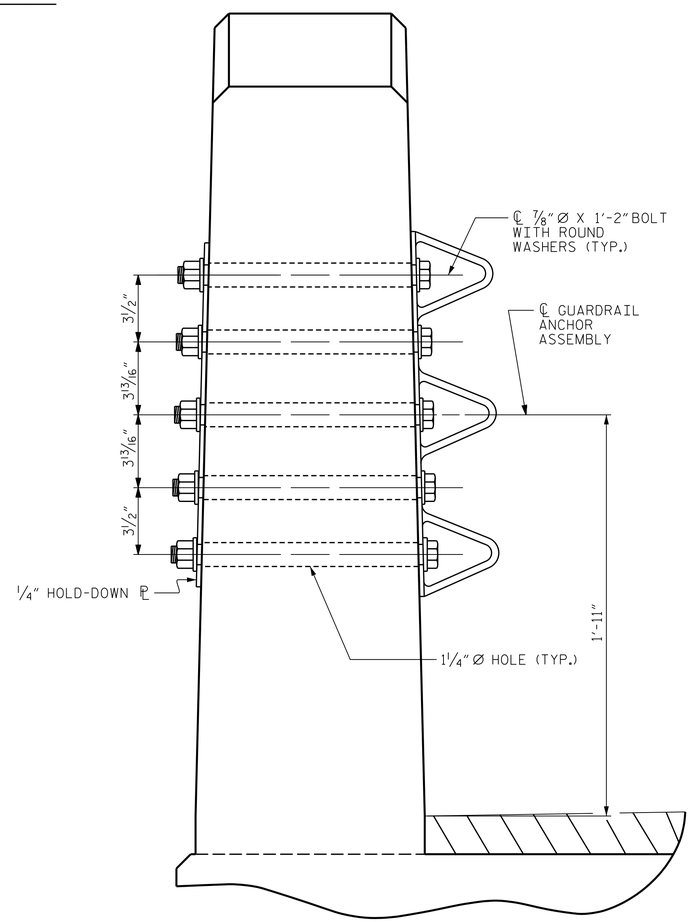

SECTION E-E

GUARDRAIL ANCHOR ASSEMBLY DETAILS

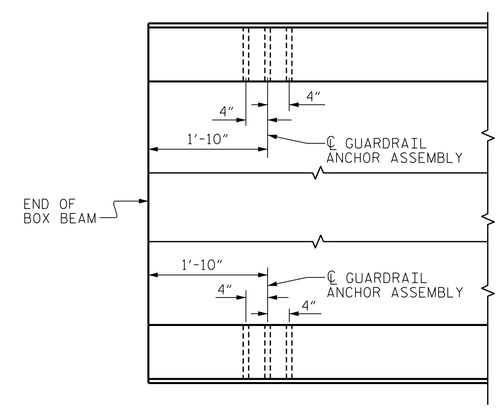

PLAN

LOCATION OF ANCHORS FOR GUARDRAIL

END BENT #1 SHOWN, ABUTMENT #2 SIMILAR.

NOTES

THE GUARDRAIL ANCHOR ASSEMBLY SHALL CONSIST OF A 1/4" HOLD DOWN PLATE AND 7 - 7/8" Ø BOLTS WITH NUTS AND WASHERS.

THE HOLD-DOWN PLATE SHALL CONFORM TO AASHTO M270 GRADE 36. AFTER FABRICATION, THE HOLD-DOWN PLATE SHALL BE HOT-DIP GALVANIZED IN ACCORDANCE WITH AASHTO M111.

BOLTS SHALL CONFORM TO THE REQUIREMENTS OF ASTM A307 AND NUTS SHALL CONFORM TO THE REQUIREMENTS OF AASHTO M291. BOLTS, NUTS AND WASHERS SHALL BE GALVANIZED. (AT THE CONTRACTOR'S OPTION, STAINLESS STEEL BOLTS, NUTS AND WASHERS MAY BE USED AS AN ALTERNATE FOR THE 7/8" Ø GALVANIZED BOLTS, NUTS AND WASHERS. THEY SHALL CONFORM TO OR EXCEED THE MECHANICAL REQUIREMENTS OF ASTM A307. THE USE OF THIS ALTERNATE SHALL BE APPROVED BY THE ENGINEER.)

THE GUARDRAIL ANCHOR ASSEMBLY IS REQUIRED AT ALL POINTS WHERE APPROACH GUARDRAIL IS TO BE ATTACHED TO THE END OF BARRIER RAIL. FOR POINTS OF ATTACHMENT, SEE SKETCH.

AFTER INSTALLATION, THE EXPOSED THREAD OF THE BOLT SHALL BE BURRED WITH A SHARP POINTED TOOL.

THE COST OF THE GUARDRAIL ANCHOR ASSEMBLY SHALL BE INCLUDED IN THE UNIT CONTRACT PRICE BID FOR VERTICAL CONCRETE BARRIER RAIL.

THE VERTICAL REINFORCING BARS MAY BE SHIFTED SLIGHTLY IN THE VERTICAL CONCRETE BARRIER RAIL TO CLEAR ASSEMBLY BOLTS.

THE 1 1/4" Ø HOLES SHALL BE FORMED OR DRILLED WITH A CORE BIT. IMPACT TOOLS WILL NOT BE PERMITTED. ANY CONCRETE DAMAGED BY THIS WORK SHALL BE REPAIRED TO THE SATISFACTION OF THE ENGINEER.

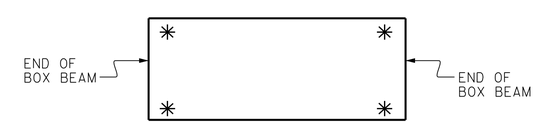

SKETCH SHOWING POINTS OF ATTACHMENT

✳ DENOTES GUARDRAIL ANCHOR ASSEMBLY

PROJECT NO. 17BP.9.R.27

STOKES COUNTY

STATION: 13+12.50 -L-

NORTH CAROLINA PROFESSIONAL SEAL 12323 ENGINEER MORRIS ISRAELNAIM

11/6/2015

STATE OF NORTH CAROLINA
DEPARTMENT OF TRANSPORTATION
RALEIGH

STANDARD
GUARDRAIL ANCHORAGE FOR VERTICAL CONCRETE BARRIER RAIL

MI ENGINEERING
1011 SCHAUB DRIVE, SUITE 100
RALEIGH, NC 27606
(919) 851-6606
FIRM PE NUMBER : P-0671

REVISIONS						SHEET NO.
NO.	BY:	DATE:	NO.	BY:	DATE:	S-10
1			3			TOTAL SHEETS
2			4			21

(SHT 1) STD. NO. GRA3

ASSEMBLED BY:	J.S. ISRAELNAIM	DATE:	12/12
CHECKED BY :	B.E. ATKINSON	DATE:	12/12
DESIGN ENGINEER OF RECORD:	P.A. de PAOLI	DATE:	07/14
DRAWN BY : MAA 5/10	ADDED 5/6/10		
CHECKED BY : GM 5/10	REV. 10/1/11	MAA/GM	
	REV. 12/5/11	MAA/GM	

11/6/2015
11:22:00 AM
User: blanning
Filename: P:\NC Projects\2012 Archive\MI2002 - Div 09 Low Impact Bridge Replacement_RK&A\MI2002.01_Stokes 11 Cored Slab\17BP9R27\Structures\17BP9R27_SD_GRA1.dgn

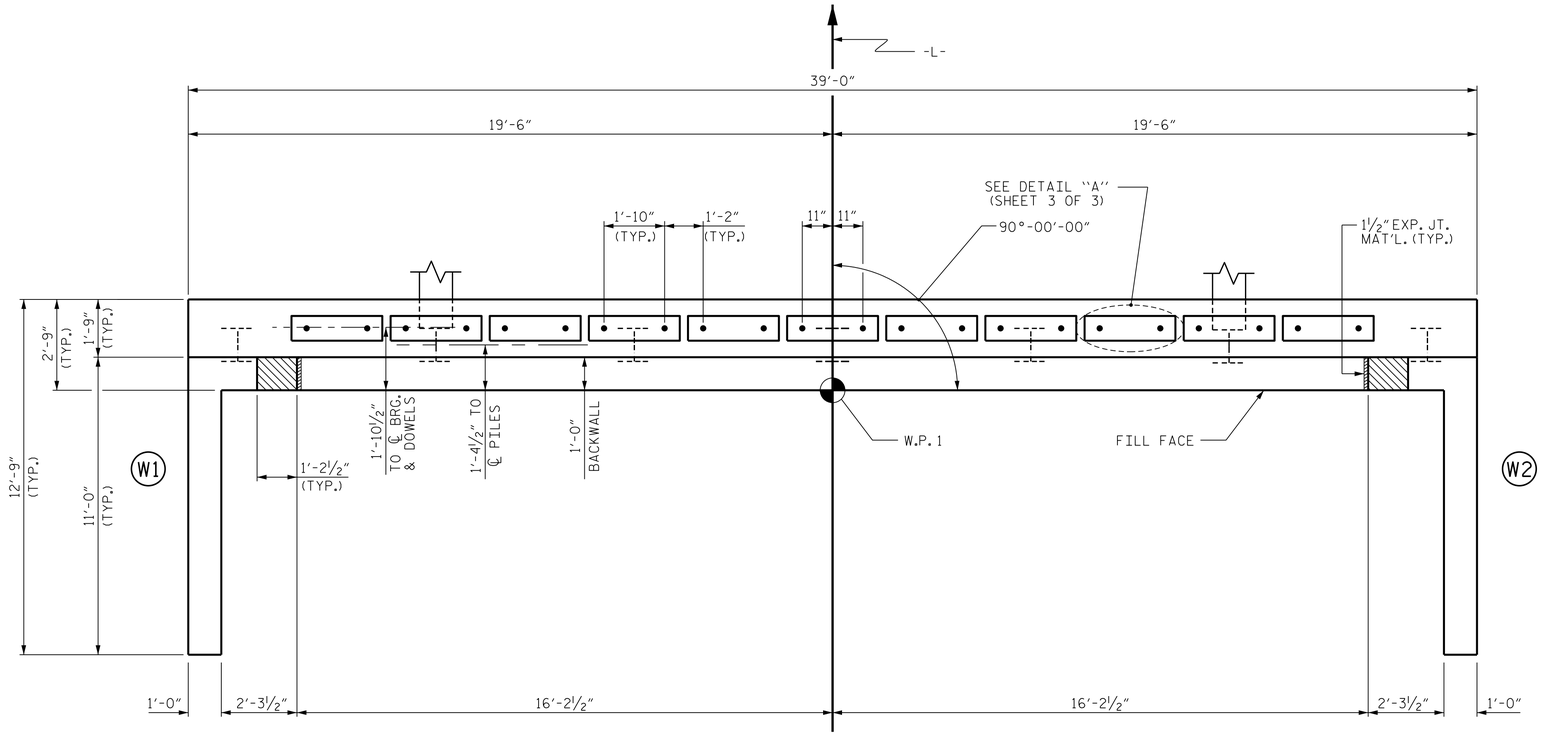

PLAN

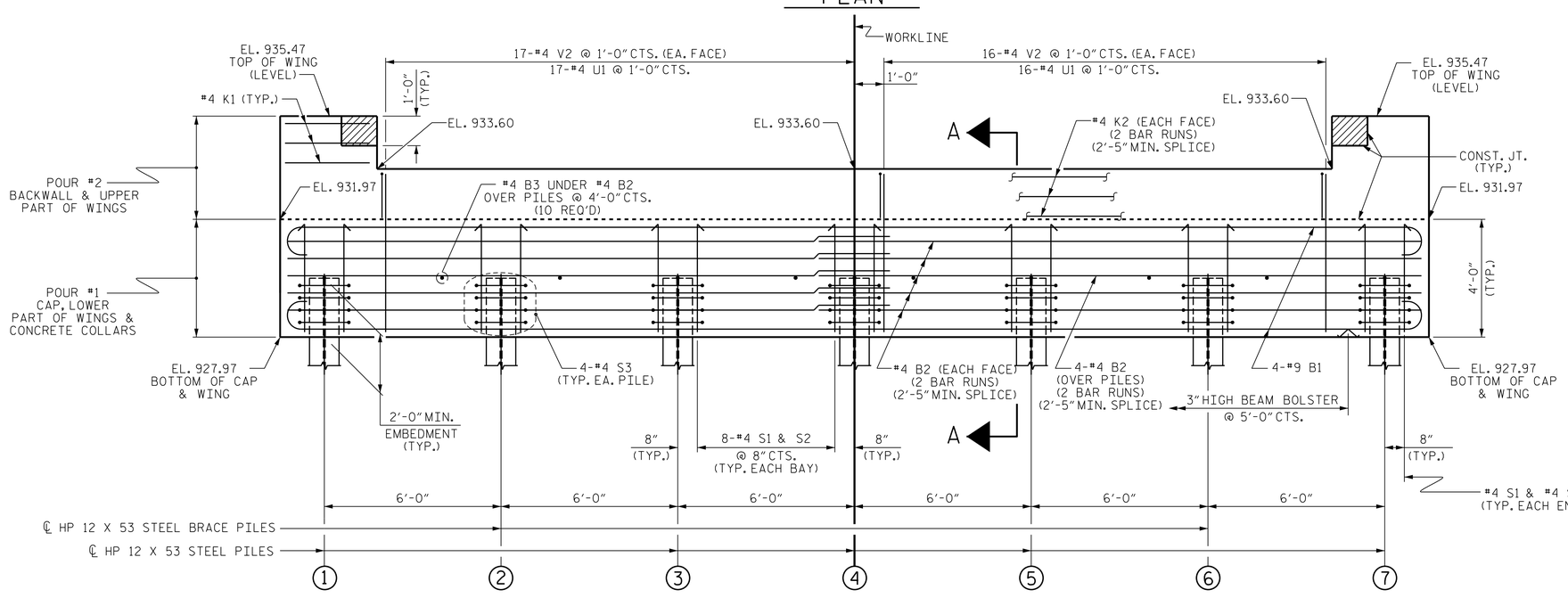

ELEVATION

WINGS NOT SHOWN FOR CLARITY.
FOR SECTION A-A, SEE SHEET 3 OF 3.
CONCRETE COLLARS FOR STEEL PILES NOT SHOWN IN PLAN AND ELEVATION VIEWS FOR CLARITY.
SEE "CORROSION PROTECTION FOR STEEL PILES DETAIL", SHEET 3 OF 3.

NOTES

STIRRUPS IN CAP MAY BE SHIFTED AS NECESSARY TO CLEAR DOWELS.

THE CONCRETE IN THE SHADED AREA OF THE WING SHALL BE POURED AFTER THE VERTICAL CONCRETE BARRIER RAIL IS CAST IF SLIP FORMING IS USED.

FOR PILE SPLICE DETAILS, SEE SHEET 3 OF 3.

FOR WING DETAILS, SEE SHEET 2 OF 3.

INSTALL THE 4" DIA. DRAIN PIPE THROUGH THE WING WALL AS REQUIRED FOR REINFORCED BRIDGE APPROACH FILLS, SEE THE ROADWAY PLANS. REINFORCING STEEL IN THE WING WALL MAY BE SHIFTED AS NECESSARY TO CLEAR THE DRAIN PIPE.

PROJECT NO. 17BP.9.R.27
STOKES COUNTY
STATION: 13+12.50 -L-

SHEET 1 OF 3

STATE OF NORTH CAROLINA
DEPARTMENT OF TRANSPORTATION
RALEIGH

SUBSTRUCTURE

END BENT No. 1

NORTH CAROLINA PROFESSIONAL SEAL 12323 ENGINEER MORRIS ISRAELNAIM
11/6/2015

MI ENGINEERING
1011 SCHAUB DRIVE, SUITE 100
RALEIGH, NC 27606
(919) 851-6606
FIRM PE NUMBER : P-0671

REVISIONS							
NO.	BY:	DATE:	NO.	BY:	DATE:	SHEET NO.	
1			3			S-11	
2			4			TOTAL SHEETS	
						21	

DRAWN BY :	J.S. ISRAELNAIM	DATE :	12/12
CHECKED BY :	B.E. ATKINSON	DATE :	12/12
DESIGN ENGINEER OF RECORD :	P.A. de PAOLI	DATE :	07/14

11/6/2015
11:22:01 AM
User: blanning
Filename: P:\NC Projects\2012 Archive\MI2002 - Div 09 Low Impact Bridge Replacement_RK&A\MI2002.01_Stokes 11 Cored Slab\17BP9R27\Structures\17BP9R27_SD_EBT1A.dgn

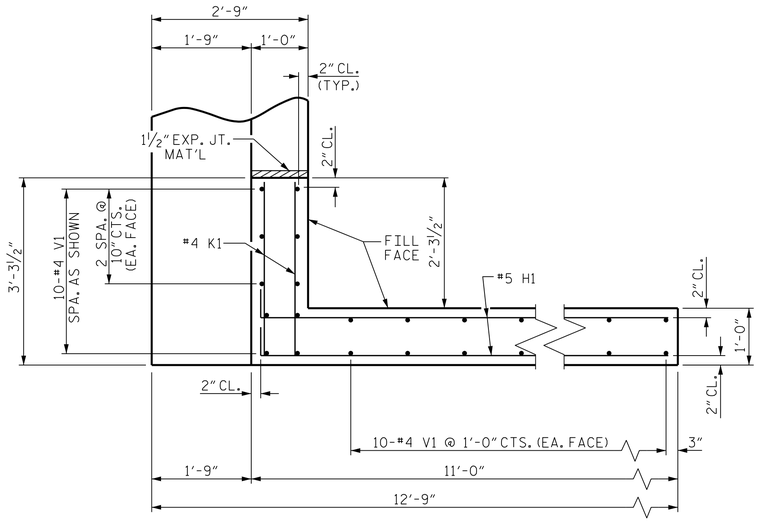

PLAN OF WING (W1)

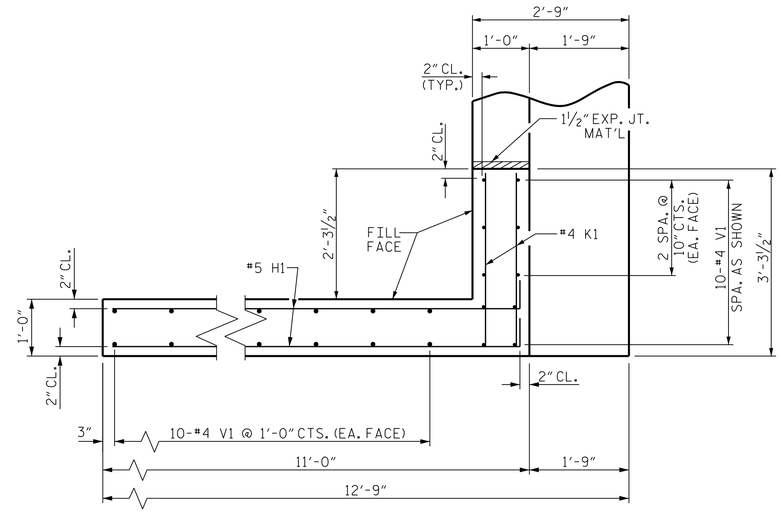

PLAN OF WING (W2)

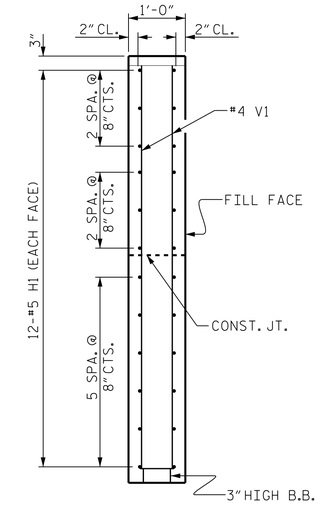

SECTION X-X

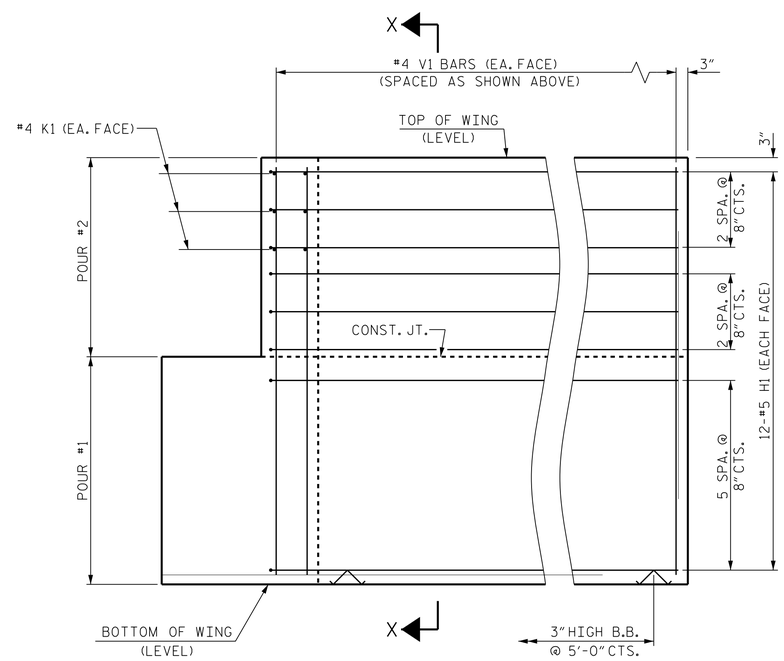

ELEVATION OF WING (W1)

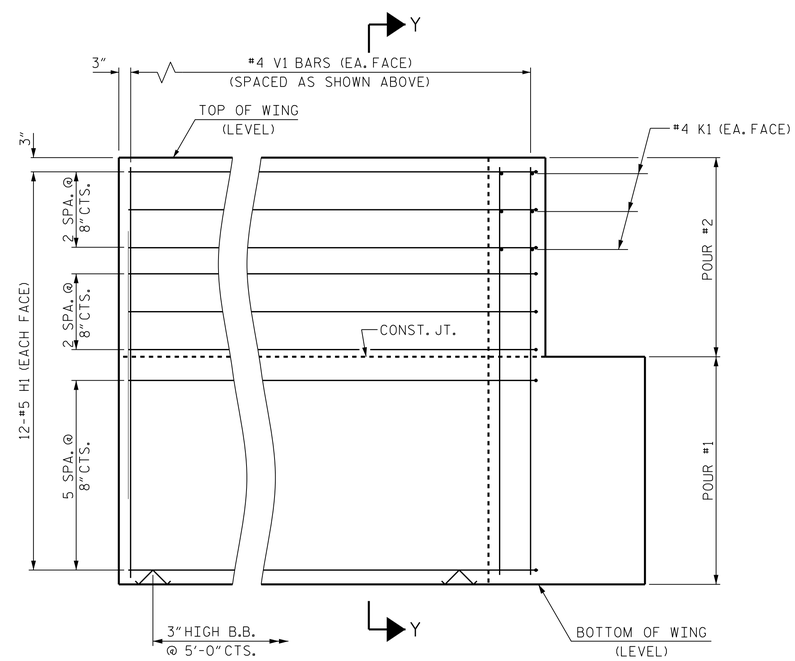

ELEVATION OF WING (W2)

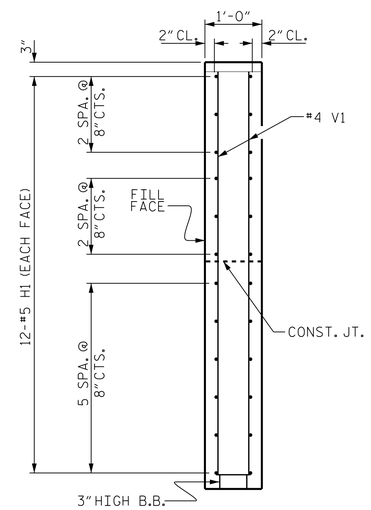

SECTION Y-Y

WING DETAILS

PROJECT NO. 17BP.9.R.27

STOKES COUNTY

STATION: 13+12.50 -L-

SHEET 2 OF 3

STATE OF NORTH CAROLINA
DEPARTMENT OF TRANSPORTATION
RALEIGH

SUBSTRUCTURE

END BENT
WING DETAILS

NORTH CAROLINA PROFESSIONAL SEAL 12323 ENGINEER MORRIS ISRAELNAIM
11/6/2015

MI ENGINEERING
1011 SCHAUB DRIVE, SUITE 100
RALEIGH, NC 27606
(919) 851-6606
FIRM PE NUMBER : P-0671

REVISIONS						SHEET NO.
NO.	BY:	DATE:	NO.	BY:	DATE:	S-12
1			3			TOTAL SHEETS
2			4			21

DRAWN BY :	J.S. ISRAELNAIM	DATE :	12/12
CHECKED BY :	B.E. ATKINSON	DATE :	12/12
DESIGN ENGINEER OF RECORD :	P.A. de PAOLI	DATE :	07/14

11/6/2015
11:22:03 AM
User: blanning
Filename: P:\NC Projects\2012 Archive\MI2002 - Div 09 Low Impact Bridge Replacement_RK&A\MI2002.01_Stokes 11 Cored Slab\17BP9R27\Structures\17BP9R27_SD_EBT1B.dgn

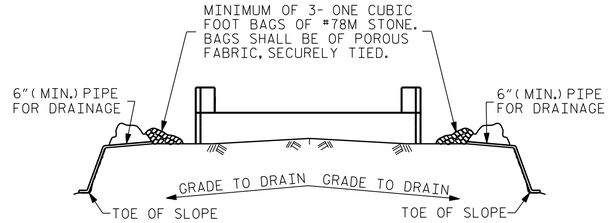

BAGGED STONE AND PIPE SHALL BE PLACED IMMEDIATELY AFTER COMPLETION OF END BENT EXCAVATION. PIPE MAY BE EITHER CONCRETE, CORRUGATED STEEL, CORRUGATED ALUMINUM ALLOY, OR CORRUGATED PLASTIC. PERFORATED PIPE WILL NOT BE ALLOWED.

BAGGED STONE SHALL REMAIN IN PLACE UNTIL THE ENGINEER DIRECTS THAT IT BE REMOVED. THE CONTRACTOR SHALL REMOVE AND DISPOSE OF SILT ACCUMULATIONS AT BAGGED STONE WHEN SO DIRECTED BY THE ENGINEER. BAGS SHALL BE REMOVED AND REPLACED WHENEVER THE ENGINEER DETERMINES THAT THEY HAVE DETERIORATED AND LOST THEIR EFFECTIVENESS.

NO SEPARATE PAYMENT WILL BE MADE FOR THIS WORK AND THE ENTIRE COST OF THIS WORK SHALL BE INCLUDED IN THE UNIT CONTRACT PRICE BID FOR THE SEVERAL PAY ITEMS.

TEMPORARY DRAINAGE AT END BENT

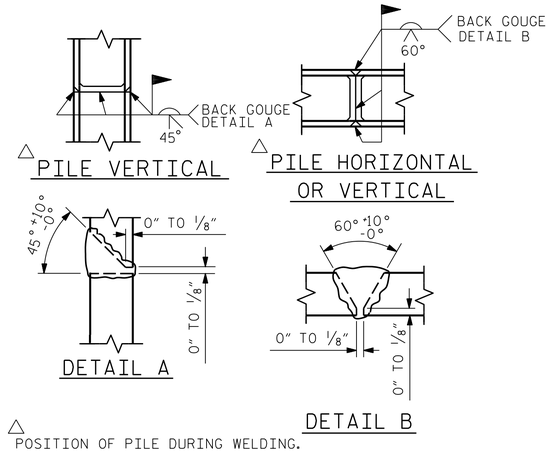

△ POSITION OF PILE DURING WELDING.

PILE SPLICE DETAILS

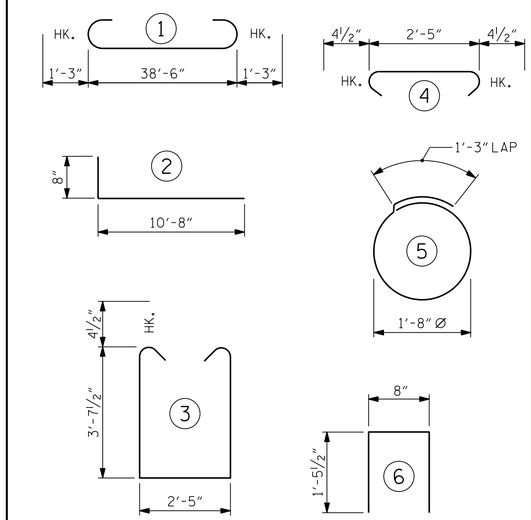

ALL BAR DIMENSIONS ARE OUT TO OUT.

BILL OF MATERIAL

END BENT No. 1

BAR	NO.	SIZE	TYPE	LENGTH	WEIGHT
B1	8	#9	1	41'-0"	1115
B2	28	#4	STR	20'-7"	385
B3	10	#4	STR	2'-5"	16
D1	22	#8	STR	2'-3"	132
H1	48	#5	2	11'-4"	567
K1	12	#4	STR	2'-11"	23
K2	12	#4	STR	20'-7"	165
S1	50	#4	3	10'-5"	348
S2	50	#4	4	3'-2"	106
S3	28	#4	5	6'-6"	122
U1	33	#4	6	3'-7"	79
V1	60	#4	STR	7'-2"	287
V2	66	#4	STR	5'-3"	231

REINFORCING STEEL 3576 LBS.

CLASS A CONCRETE BREAKDOWN

POUR #1 CAP, LOWER PART OF WINGS & COLLARS 20.1 C.Y.

POUR #2 BACKWALL & UPPER PART OF WINGS 5.4 C.Y.

TOTAL CLASS A CONCRETE 25.5 C.Y.

HP 12 X 53 STEEL PILES

NO: 7 LIN. FT.= 84

STEEL PILE POINTS 7 EACH

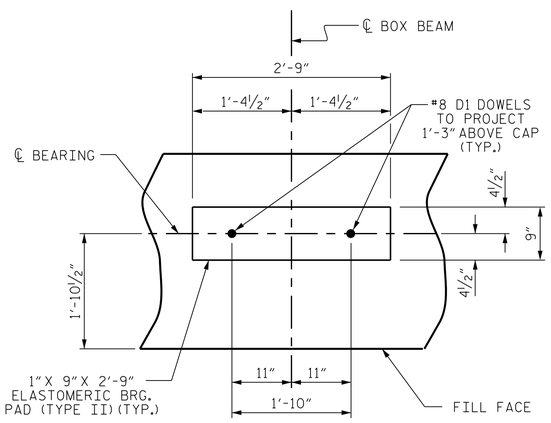

DETAIL "A"

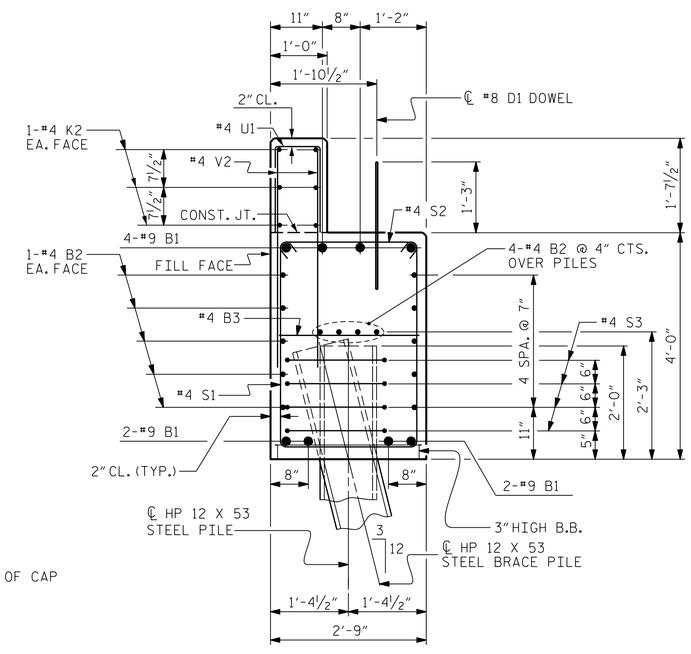

SECTION A-A

(CONCRETE COLLAR NOT SHOWN FOR CLARITY. SEE "CORROSION PROTECTION FOR STEEL PILES DETAIL.")

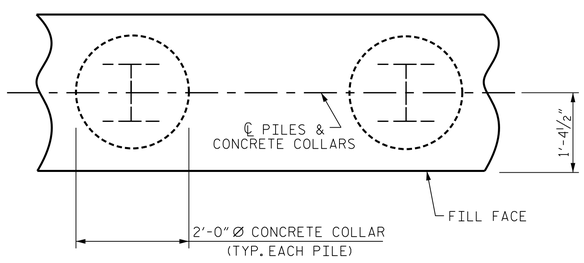

PLAN

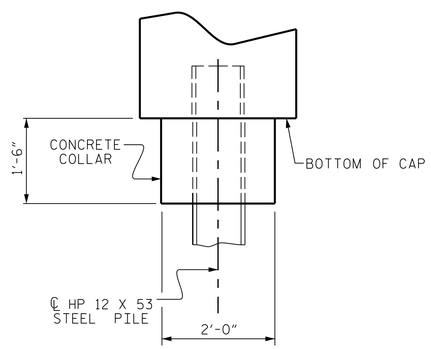

ELEVATION

CORROSION PROTECTION FOR STEEL PILES DETAIL

PROJECT NO. 17BP.9.R.27

STOKES COUNTY

STATION: 13+12.50 -L-

SHEET 3 OF 3

STATE OF NORTH CAROLINA
DEPARTMENT OF TRANSPORTATION
RALEIGH

SUBSTRUCTURE

END BENT No. 1
DETAILS

NORTH CAROLINA PROFESSIONAL SEAL 12323 ENGINEER MORRIS ISRAELNAIM
11/6/2015

MI ENGINEERING
1011 SCHAUB DRIVE, SUITE 100
RALEIGH, NC 27606
(919) 851-6606
FIRM PE NUMBER : P-0671

REVISIONS						
NO.	BY:	DATE:	NO.	BY:	DATE:	
1			3			
2			4			

SHEET NO. S-13
TOTAL SHEETS 21

DRAWN BY : J.S. ISRAELNAIM DATE : 12/12
CHECKED BY : B.E. ATKINSON DATE : 12/12
DESIGN ENGINEER OF RECORD : P.A. de PAOLI DATE : 07/14

11/6/2015
11:22:05 AM
User: blanning
Filename: P:\NC Projects\2012 Archive\MI2002 - Div 09 Low Impact Bridge Replacement_RK&A\MI2002.01_Stokes 11 Cored Slab\17BP9R27\Structures\17BP9R27_SD_EBT1C.dgn

ABUTMENT NO. 2 CONSTRUCTION SEQUENCE

1. THE EXISTING STRUCTURE TO REMAIN IN PLACE TO MAINTAIN LATERAL SUPPORT FOR THE EXISTING ABUTMENT WALL.
2. EXCAVATE TO THE BOTTOM OF THE PROPOSED ABUTMENT AND WINGWALL CAPS.
3. INSTALL THE H-PILES FOR THE ABUTMENT AND WINGWALLS.
4. FILL THE VOID AROUND THE H-PILES WITH 3,000 PSI GROUT OR CONCRETE TO THE TOP OF ROCK.
5. INSTALL SHORING.
6. AFTER THE GROUT OR CONCRETE HAS ATTAINED A STRENGTH OF 3,000 PSI, REMOVE THE EXISTING SUPERSTRUCTURE AND EXISTING ABUTMENT 2 WALL AND WINGWALLS. RETAIN THE EXISTING CONCRETE SILL.
7. EXCAVATE TO THE BACK FACE OF THE SHORING AND DOWN TO THE ROCK LINE. REMOVE LOOSE SOIL AND MATERIALS FROM THE H-PILES AND SHORING PRIOR TO INSTALLING THE REINFORCING STEEL AND PLACING CONCRETE FOR ABUTMENT WALL AND WINGWALLS.
8. INSTALL REINFORCING STEEL FOR ABUTMENT WALL AND WINGS.
9. FORM AND POUR ABUTMENT WALL TO BOTTOM OF THE PROPOSED CAP FOR ABUTMENT AND WINGS (POUR #1).
10. CONSTRUCT THE CAP FOR ABUTMENT AND WINGS (POUR #2).
11. CONSTRUCT THE UPPER PART OF WINGS AND BACKWALL (POUR #3).

NOTES

#5 S1 BARS IN CAP MAY BE SHIFTED AS NECESSARY TO CLEAR DOWELS.

THE CONCRETE IN THE SHADED AREA OF THE WING SHALL BE POURED AFTER THE VERTICAL CONCRETE BARRIER RAIL IS CAST IF SLIP FORMING IS USED.

FOR WING DETAILS, SEE SHEETS 3 AND 4 OF 5.

FOR PILE SPLICE DETAILS, SEE END BENT 1 SHEET 3 OF 3.

FOR SHORING, SEE FOUNDATION NOTES SHEET S-2.

A 3 FOOT STRIP OF FILTER FABRIC SHALL BE ATTACHED TO THE FILL FACE OF THE WING COVERING THE ENTIRE LENGTH OF THE EXPANSION JOINT ABOVE THE SHORING.

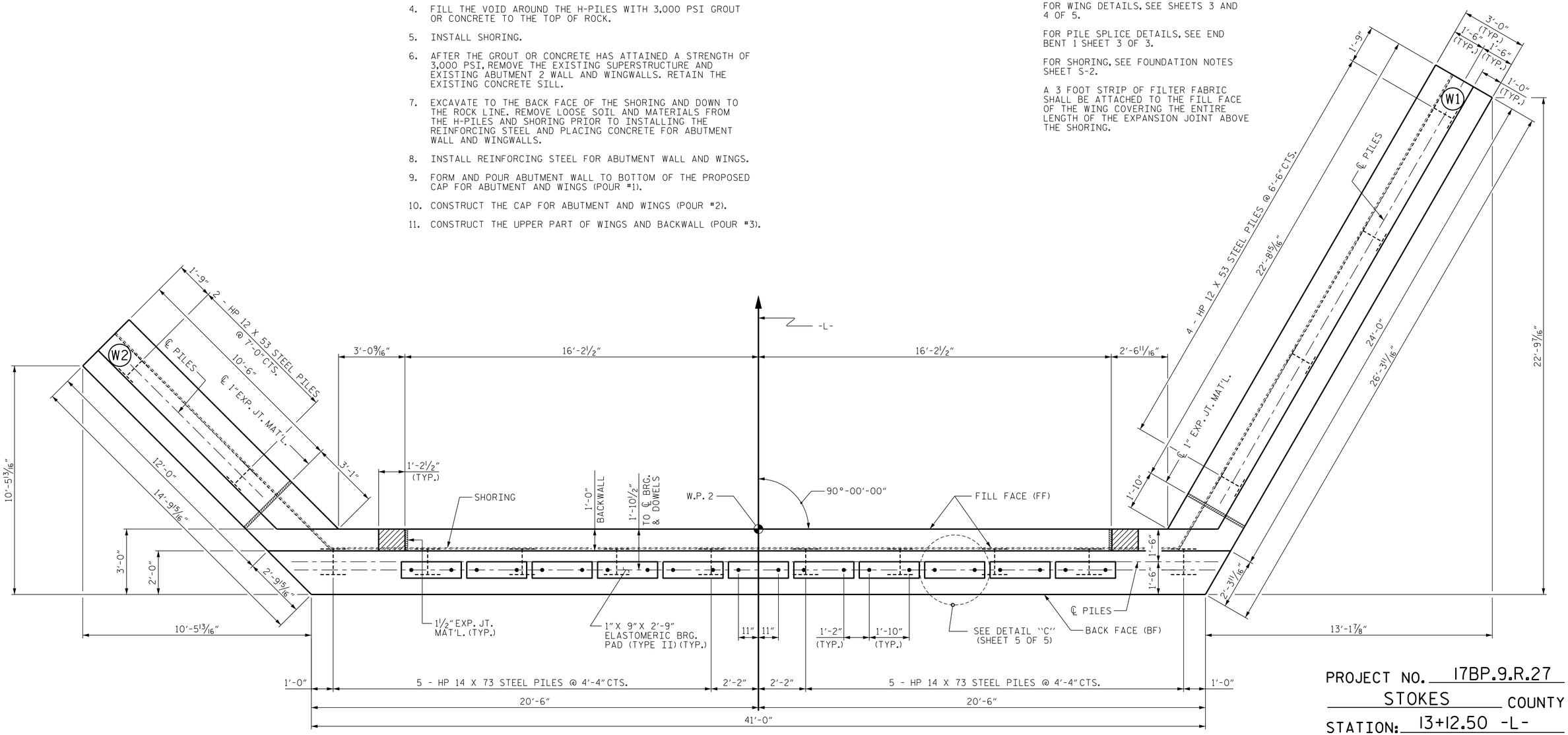

PLAN

PROJECT NO. 17BP.9.R.27

STOKES COUNTY

STATION: 13+12.50 -L-

SHEET 1 OF 5

STATE OF NORTH CAROLINA
DEPARTMENT OF TRANSPORTATION
RALEIGH

SUBSTRUCTURE

ABUTMENT NO. 2

NORTH CAROLINA PROFESSIONAL SEAL 12323 ENGINEER MORRIS ISRAELNAM

11/6/2015

MI ENGINEERING
1011 SCHAUB DRIVE, SUITE 100
RALEIGH, NC 27606
(919) 851-6606
FIRM PE NUMBER : P-0671

REVISIONS								SHEET NO.
NO.	BY:	DATE:	NO.	BY:	DATE:			S-14
1			3					TOTAL SHEETS
2			4					21

DRAWN BY :	B.E. LANNING	DATE :	07/14
CHECKED BY :	P.A. de PAOLI	DATE :	07/14
DESIGN ENGINEER OF RECORD :	P.A. de PAOLI	DATE :	07/14

11/6/2015
11:22:07 AM
User: blanning
Filename: P:\NC Projects\2012 Archive\MI2002 - Div 09 Low Impact Bridge Replacement_RK&A\MI2002.01_Stokes 11 Cored Slab\17BP9R27\Structures\17BP9R27_SD_EBT2A.dgn

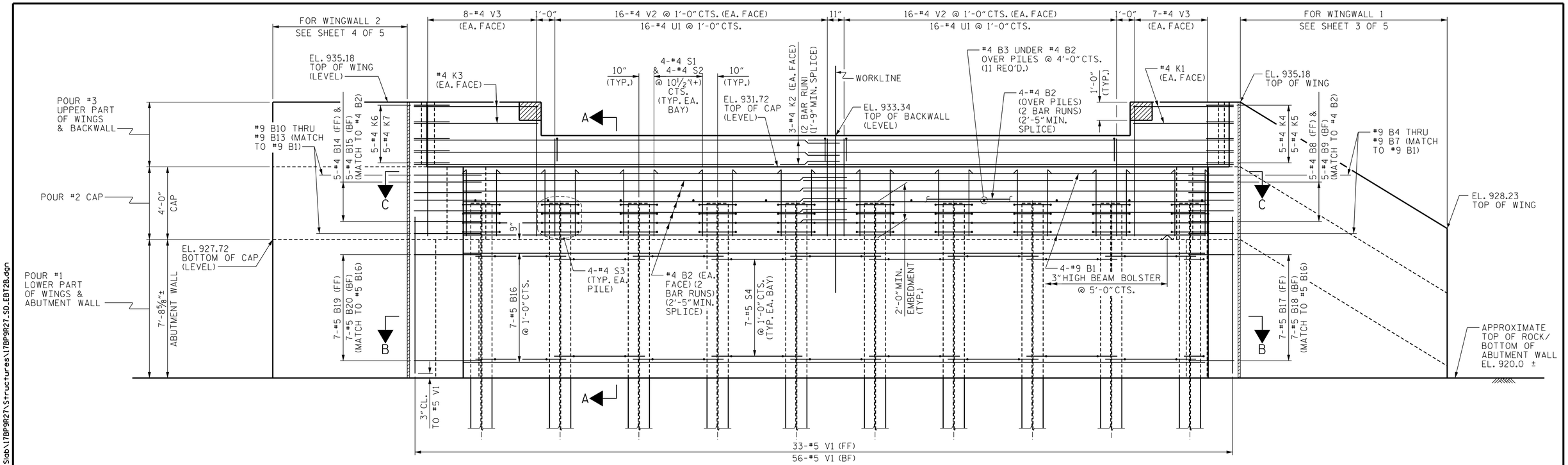

ELEVATION

TOP OF PILE ELEVATIONS ARE 929.72 UNLESS OTHERWISE NOTED.

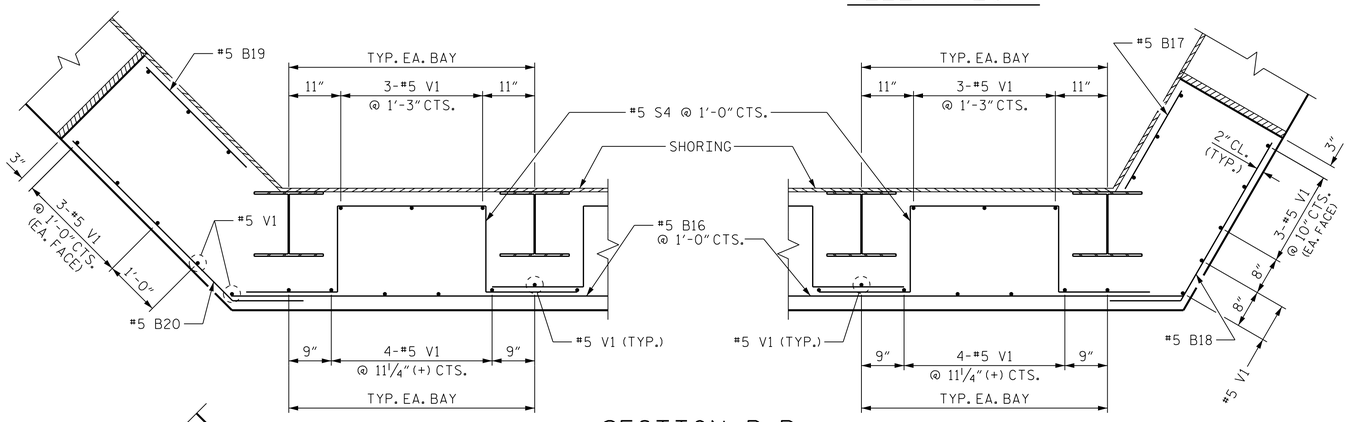

SECTION B-B

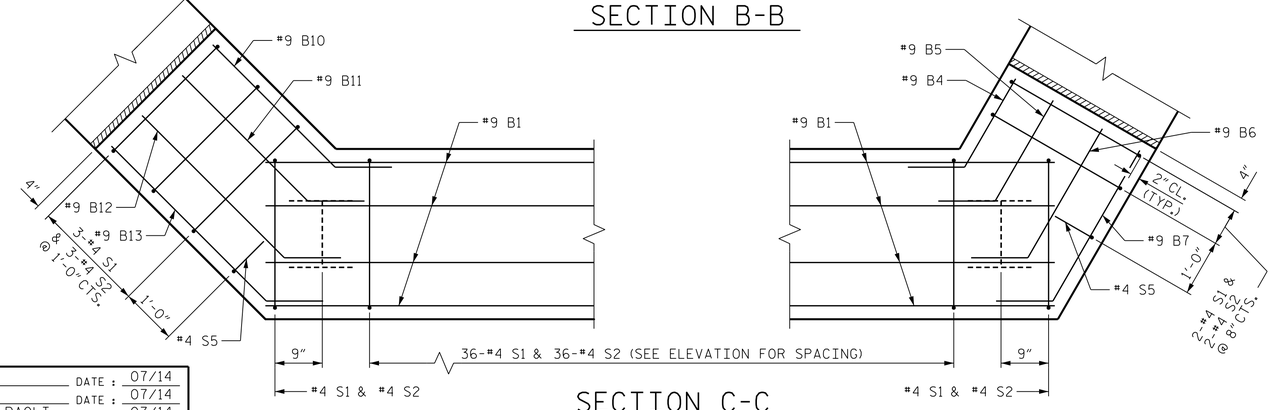

SECTION C-C

NOTES

#4 S1 BARS IN CAP MAY BE SHIFTED AS NECESSARY TO CLEAR DOWELS.

THE CONCRETE IN THE SHADED AREA OF THE WING SHALL BE POURED AFTER THE VERTICAL CONCRETE BARRIER RAIL IS CAST IF SLIP FORMING IS USED.

FOR WING DETAILS, SEE SHEETS 3 & 4 OF 5.

FOR SECTION A-A, SEE SHEET 5 OF 5.

(BF) - BACK FACE

(FF) - FILL FACE

PROJECT NO. 17BP.9.R.27

STOKES COUNTY

STATION: 13+12.50 -L-

SHEET 2 OF 5

NORTH CAROLINA PROFESSIONAL SEAL 12323 ENGINEER MORRIS ISRAEL NAIM

11/6/2015

STATE OF NORTH CAROLINA
DEPARTMENT OF TRANSPORTATION
RALEIGH

SUBSTRUCTURE

ABUTMENT NO. 2

MI ENGINEERING
1011 SCHAUB DRIVE, SUITE 100
RALEIGH, NC 27606
(919) 851-6606
FIRM PE NUMBER : P-0671

REVISIONS							
NO.	BY:	DATE:	NO.	BY:	DATE:		
1			3				
2			4				

SHEET NO. S-15
TOTAL SHEETS 21

DRAWN BY :	B.E. LANNING	DATE :	07/14
CHECKED BY :	P.A. de PAOLI	DATE :	07/14
DESIGN ENGINEER OF RECORD :	P.A. de PAOLI	DATE :	07/14

11/6/2015
11:22:10 AM
User: blanning
Filename: P:\NC Projects\2012 Archive\MI2002 - Div 09 Low Impact Bridge Replacement_RK&A\MI2002.01_Stokes 11 Cored Slab\17BP9R27\Structures\17BP9R27_SD_EB12B.dgn

NOTES

FOR SECTION D-D, SEE SHEET 5 OF 5.

(BF) - BACK FACE

(FF) - FILL FACE

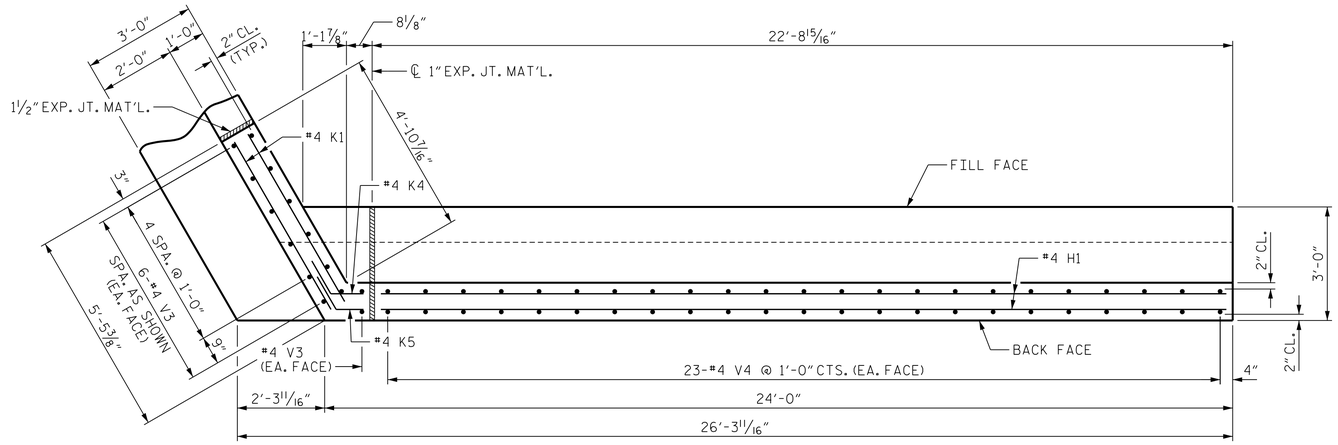

PLAN OF WING (W1)

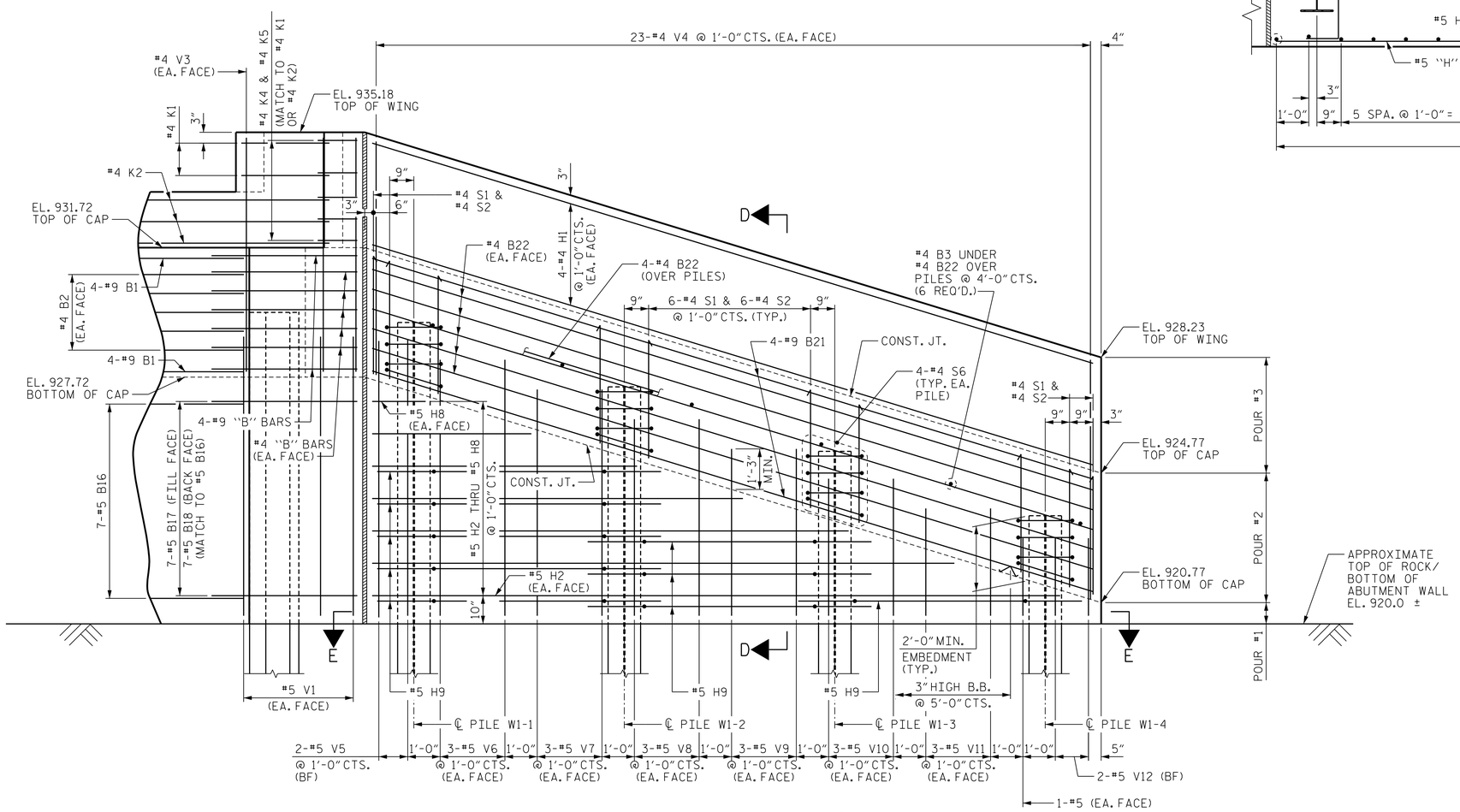

ELEVATION OF WING (W1)

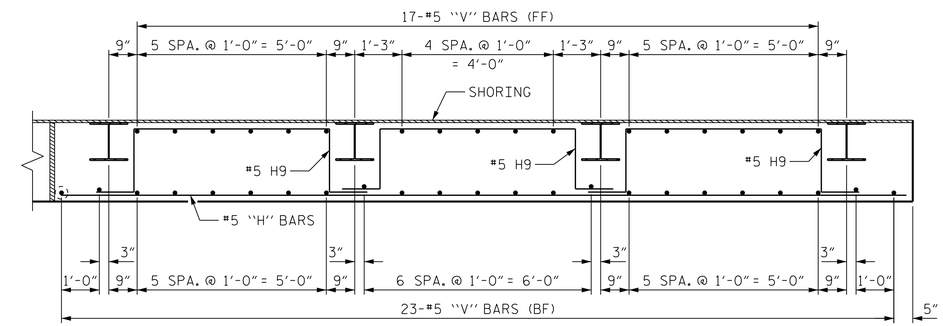

SECTION E-E

TOP OF PILE ELEVATIONS	
PILE	ELEVATION
W1-1	929.42
W1-2	927.44
W1-3	925.45
W1-4	923.46

PROJECT NO. 17BP.9.R.27

STOKES COUNTY

STATION: 13+12.50 -L-

SHEET 3 OF 5

STATE OF NORTH CAROLINA
DEPARTMENT OF TRANSPORTATION
RALEIGH

SUBSTRUCTURE

ABUTMENT NO. 2
WING DETAILS

WING WI

NORTH CAROLINA PROFESSIONAL ENGINEER SEAL 12323 MORRIS ISRAEL NAIM

11/6/2015

MI ENGINEERING
1011 SCHAUB DRIVE, SUITE 100
RALEIGH, NC 27606
(919) 851-6606
FIRM PE NUMBER : P-0671

REVISIONS						
NO.	BY:	DATE:	NO.	BY:	DATE:	
1			3			
2			4			

SHEET NO. S-16

TOTAL SHEETS 21

DRAWN BY : B.E. LANNING DATE : 07/14
CHECKED BY : P.A. de PAOLI DATE : 07/14
DESIGN ENGINEER OF RECORD : P.A. de PAOLI DATE : 07/14

11/6/2015
11:22:12 AM
User: blanning
Filename: P:\NC Projects\2012 Archive\MI2002 - Div 09 Low Impact Bridge Replacement_RK&A\MI2002.01_Stokes 11 Cored Slab\17BP9R27\Structures\17BP9R27_SD_EB12C.dgn

NOTES

FOR SECTION D-D, SEE SHEET 5 OF 5.

(BF) - BACK FACE

(FF) - FILL FACE

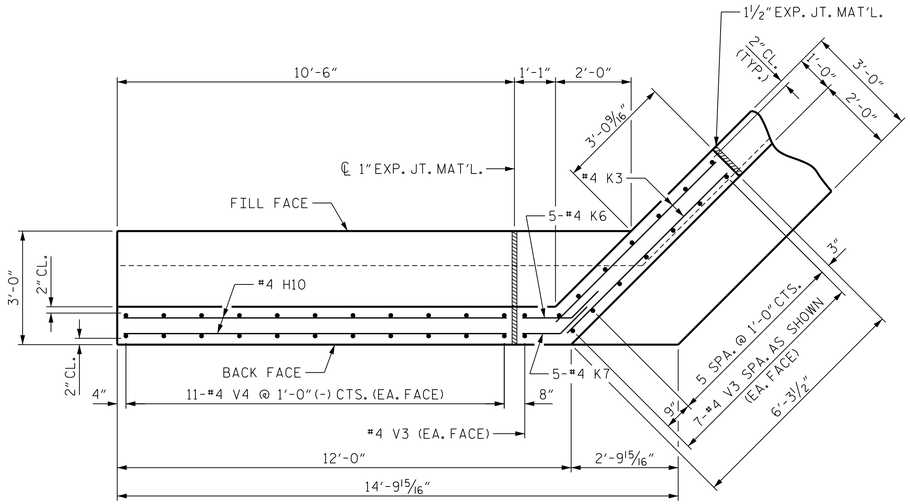

PLAN OF WING (W2)

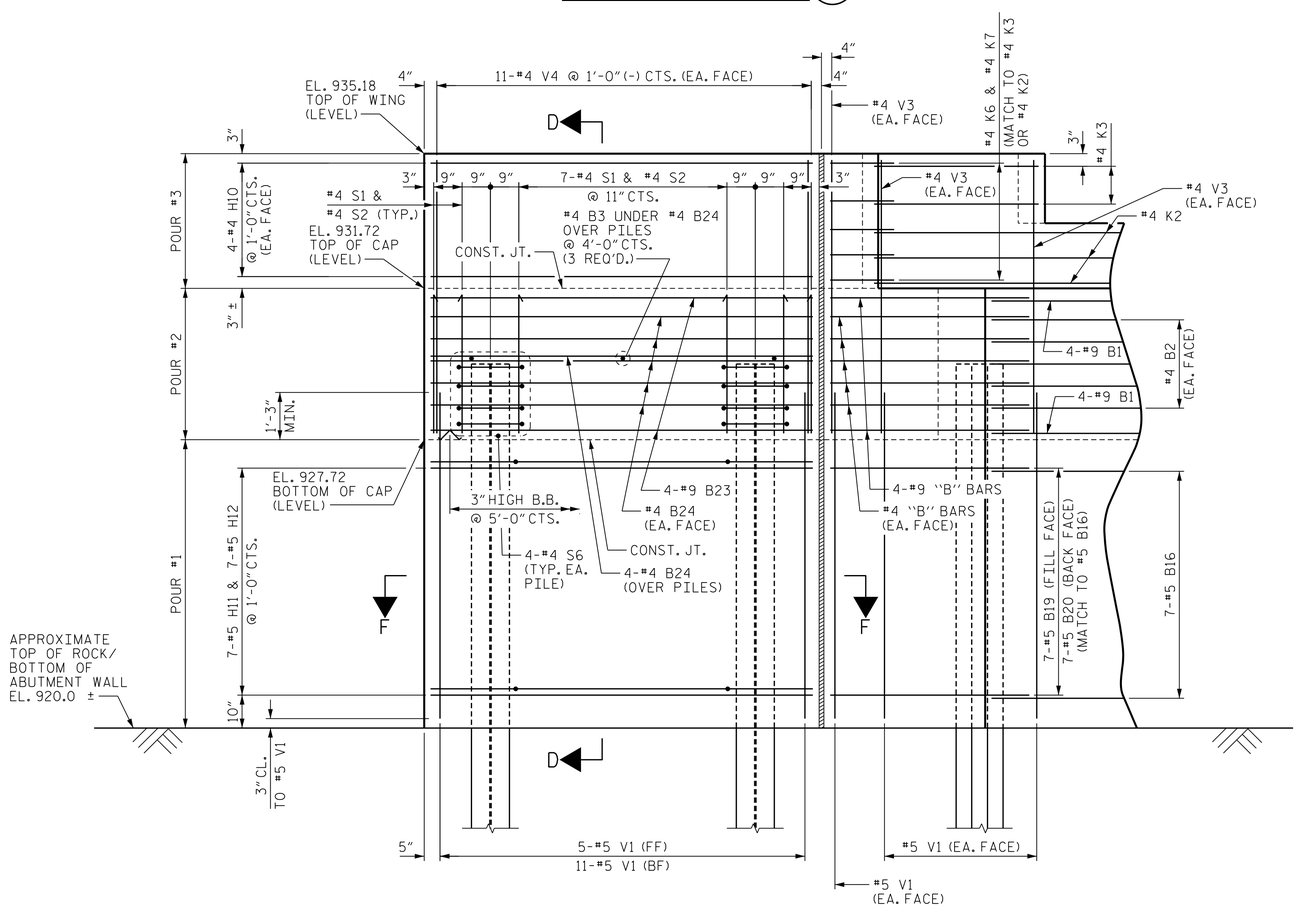

ELEVATION OF WING (W2)

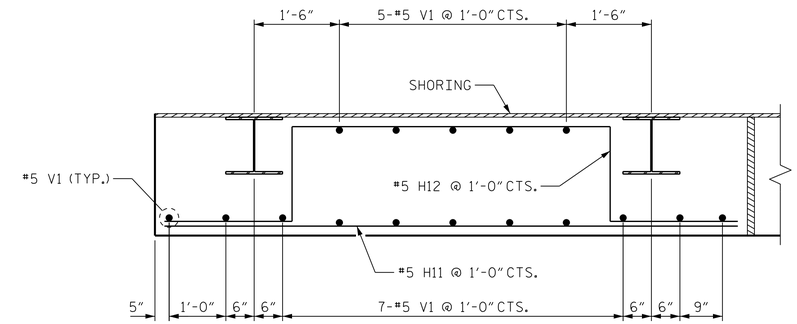

SECTION F-F

PROJECT NO. 17BP.9.R.27

STOKES COUNTY

STATION: 13+12.50 -L-

SHEET 4 OF 5

NORTH CAROLINA PROFESSIONAL SEAL 12323 ENGINEER MORRIS ISRAELNIAM

11/6/2015

STATE OF NORTH CAROLINA
DEPARTMENT OF TRANSPORTATION
RALEIGH

SUBSTRUCTURE

ABUTMENT NO. 2
WING DETAILS

WING W2

MI ENGINEERING
1011 SCHAUB DRIVE, SUITE 100
RALEIGH, NC 27606
(919) 851-6606
FIRM PE NUMBER : P-0671

REVISIONS								SHEET NO.
NO.	BY:	DATE:	NO.	BY:	DATE:			S-17
1			3					TOTAL SHEETS
2			4					21

DRAWN BY :	B.E. LANNING	DATE :	07/14
CHECKED BY :	P.A. de PAOLI	DATE :	07/14
DESIGN ENGINEER OF RECORD :	P.A. de PAOLI	DATE :	07/14

11/6/2015
11:22:14 AM
User: blanning
Filename: P:\NC Projects\2012 Archive\MI2002 - Div 09 Low Impact Bridge Replacement_RK&A\MI2002.01_Stokes 11 Cored Slab\17BP9R27\Structures\17BP9R27_SD_EB12D.dgn

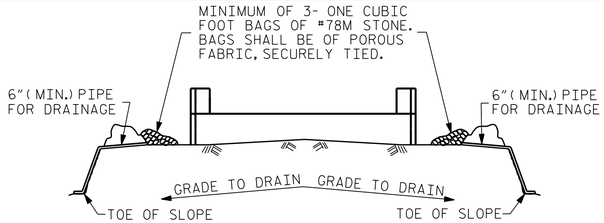

BAGGED STONE AND PIPE SHALL BE PLACED IMMEDIATELY AFTER COMPLETION OF END BENT EXCAVATION. PIPE MAY BE EITHER CONCRETE, CORRUGATED STEEL, CORRUGATED ALUMINUM ALLOY, OR CORRUGATED PLASTIC. PERFORATED PIPE WILL NOT BE ALLOWED.

BAGGED STONE SHALL REMAIN IN PLACE UNTIL THE ENGINEER DIRECTS THAT IT BE REMOVED. THE CONTRACTOR SHALL REMOVE AND DISPOSE OF SILT ACCUMULATIONS AT BAGGED STONE WHEN SO DIRECTED BY THE ENGINEER. BAGS SHALL BE REMOVED AND REPLACED WHENEVER THE ENGINEER DETERMINES THAT THEY HAVE DETERIORATED AND LOST THEIR EFFECTIVENESS.

NO SEPARATE PAYMENT WILL BE MADE FOR THIS WORK AND THE ENTIRE COST OF THIS WORK SHALL BE INCLUDED IN THE UNIT CONTRACT PRICE BID FOR THE SEVERAL PAY ITEMS.

TEMPORARY DRAINAGE AT ABUTMENT

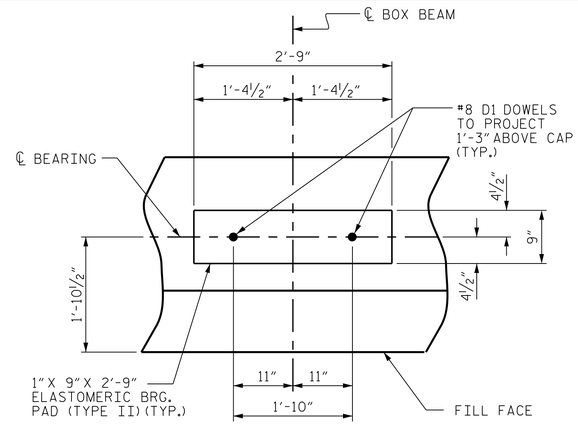

DETAIL "C"

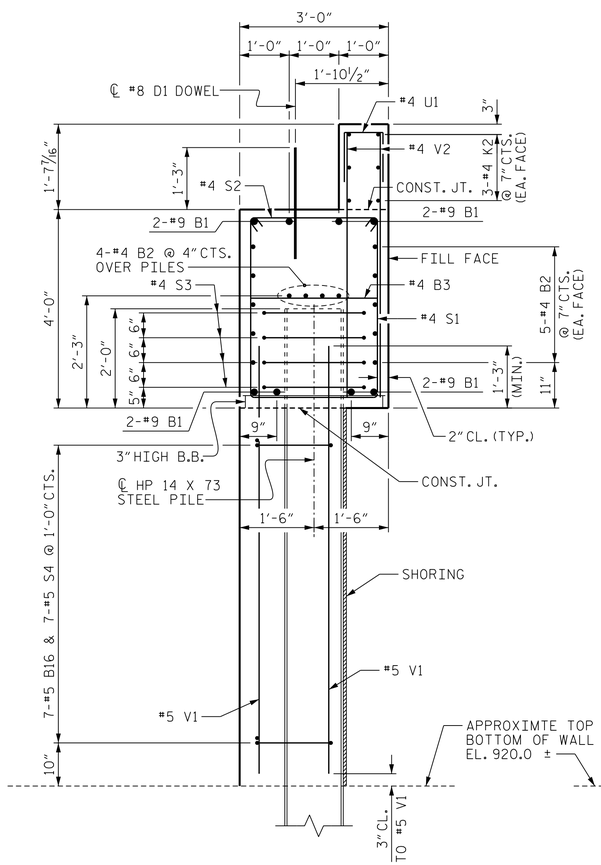

SECTION A-A

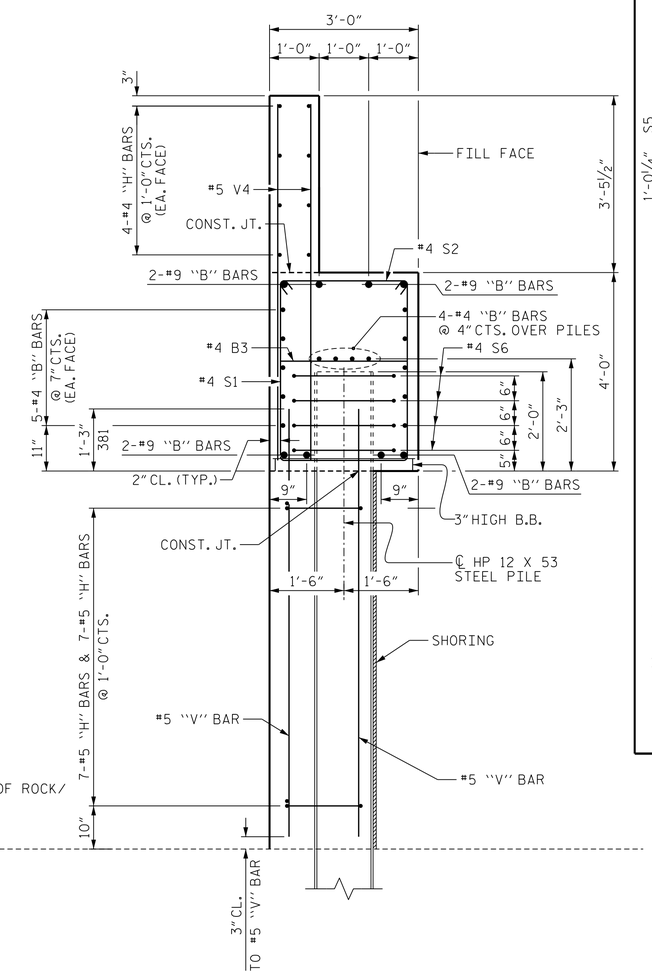

SECTION D-D

BAR TYPES

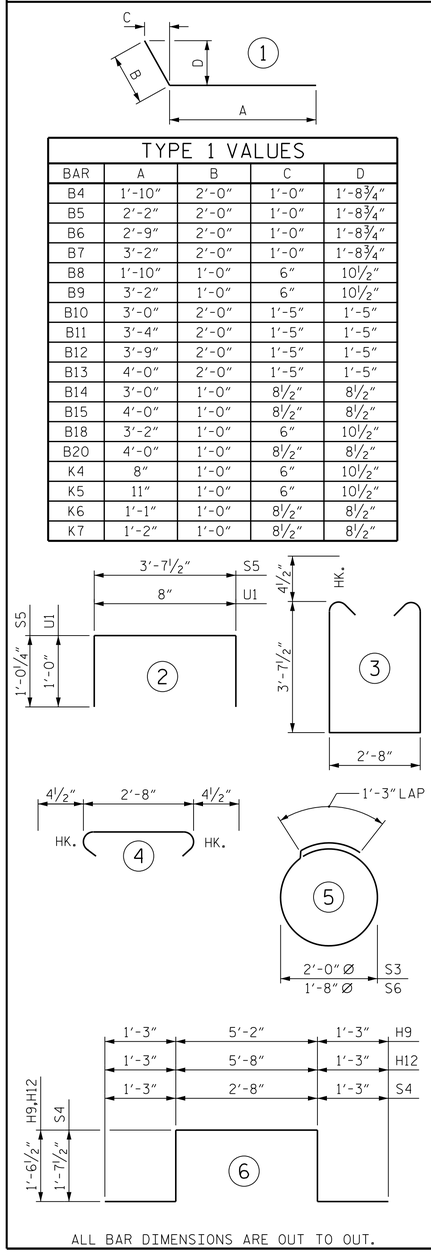

ALL BAR DIMENSIONS ARE OUT TO OUT.

TYPE 1 VALUES				
BAR	A	B	C	D
B4	1'-10"	2'-0"	1'-0"	1'-8¾"
B5	2'-2"	2'-0"	1'-0"	1'-8¾"
B6	2'-9"	2'-0"	1'-0"	1'-8¾"
B7	3'-2"	2'-0"	1'-0"	1'-8¾"
B8	1'-10"	1'-0"	6"	10½"
B9	3'-2"	1'-0"	6"	10½"
B10	3'-0"	2'-0"	1'-5"	1'-5"
B11	3'-4"	2'-0"	1'-5"	1'-5"
B12	3'-9"	2'-0"	1'-5"	1'-5"
B13	4'-0"	2'-0"	1'-5"	1'-5"
B14	3'-0"	1'-0"	8½"	8½"
B15	4'-0"	1'-0"	8½"	8½"
B18	3'-2"	1'-0"	6"	10½"
B20	4'-0"	1'-0"	8½"	8½"
K4	8"	1'-0"	6"	10½"
K5	11"	1'-0"	6"	10½"
K6	1'-1"	1'-0"	8½"	8½"
K7	1'-2"	1'-0"	8½"	8½"

BILL OF MATERIAL
FOR ABUTMENT NO. 2

BAR	NO.	SIZE	TYPE	LENGTH	WEIGHT	BAR	NO.	SIZE	TYPE	LENGTH	WEIGHT
B1	8	#9	STR	41'-0"	1115	S1	76	#4	3	10'-8"	542
B2	28	#4	STR	21'-9"	407	S2	76	#4	4	3'-5"	173
B3	20	#4	STR	2'-8"	36	S3	40	#4	5	7'-5"	198
B4	2	#9	1	3'-10"	26	S4	63	#5	6	8'-5"	553
B5	2	#9	1	4'-2"	28	S5	2	#4	2	5'-8"	8
B6	2	#9	1	4'-9"	32	S6	24	#4	5	6'-5"	103
B7	2	#9	1	5'-2"	35						
B8	5	#4	1	2'-10"	9	U1	32	#4	2	2'-8"	57
B9	5	#4	1	4'-2"	14						
B10	2	#9	1	5'-0"	34	V1	105	#5	STR	9'-7"	1050
B11	2	#9	1	5'-4"	36	V2	64	#4	STR	5'-3"	224
B12	2	#9	1	5'-9"	39	V3	30	#4	STR	7'-1"	142
B13	2	#9	1	6'-0"	41	V4	68	#4	STR	7'-1"	322
B14	5	#4	1	4'-0"	13	V5	2	#5	STR	9'-7"	20
B15	5	#4	1	5'-0"	17	V6	6	#5	STR	9'-0"	56
B16	7	#5	STR	41'-0"	299	V7	6	#5	STR	8'-1"	51
B17	7	#5	STR	1'-9"	13	V8	6	#5	STR	7'-2"	45
B18	7	#5	1	4'-2"	30	V9	6	#5	STR	6'-3"	39
B19	7	#5	STR	2'-8"	19	V10	6	#5	STR	5'-4"	33
B20	7	#5	1	5'-0"	37	V11	6	#5	STR	4'-5"	28
B21	8	#9	STR	23'-5"	637	V12	4	#5	STR	3'-5"	14
B22	14	#4	STR	23'-5"	219						
B23	8	#9	STR	10'-1"	274						
B24	14	#4	STR	10'-1"	94						
D1	22	#8	STR	2'-3"	132						
H1	8	#4	STR	23'-5"	125						
H2	1	#5	STR	21'-5"	22						
H3	1	#5	STR	18'-1"	19						
H4	1	#5	STR	14'-10"	15						
H5	1	#5	STR	11'-7"	12						
H6	1	#5	STR	8'-5"	9						
H7	1	#5	STR	5'-0"	5						
H8	1	#5	STR	1'-9"	2						
H9	9	#5	6	10'-9"	101						
H10	8	#4	STR	10'-1"	54						
H11	7	#5	STR	10'-1"	74						
H12	7	#5	6	11'-3"	82						
K1	4	#4	STR	5'-2"	14						
K2	12	#4	STR	23'-0"	184						
K3	4	#4	STR	6'-1"	16						
K4	5	#4	1	1'-8"	6						
K5	5	#4	1	1'-11"	6						
K6	5	#4	1	2'-1"	7						
K7	5	#4	1	2'-2"	7						

REINFORCING STEEL 8054 LBS.

CLASS A CONCRETE BREAKDOWN (FOR ABUTMENT NO. 2)

POUR #1 LOWER PART OF WINGS & ABUTMENT WALL 40.6 C.Y.

POUR #2 CAP 35.1 C.Y.

POUR #3 UPPER PART OF WINGS & BACKWALL 7.9 C.Y.

TOTAL CLASS A CONCRETE 83.6 C.Y.

HP 12 X 53 STEEL PILES
NO: 6 LIN. FT.= 93

HP 14 X 73 STEEL PILES
NO: 10 LIN. FT.= 176

PILE EXCAVATION IN SOIL
LIN. FT.= 116

PILE EXCAVATION NOT IN SOIL
LIN. FT.= 128

PROJECT NO. 17BP.9.R.27
STOKES COUNTY
STATION: 13+12.50 -L-

SHEET 5 OF 5

STATE OF NORTH CAROLINA
DEPARTMENT OF TRANSPORTATION
RALEIGH

SUBSTRUCTURE

ABUTMENT NO. 2 DETAILS

NORTH CAROLINA PROFESSIONAL SEAL 12323 ENGINEER MORRIS ISRAEL NAIM
11/6/2015

MI ENGINEERING
1011 SCHAUB DRIVE, SUITE 100
RALEIGH, NC 27606
(919) 851-6606
FIRM PE NUMBER : P-0671

REVISIONS							
NO.	BY:	DATE:	NO.	BY:	DATE:	SHEET NO.	
1			3			S-18	
2			4			TOTAL SHEETS	
						21	

DRAWN BY :	B.E. LANNING	DATE :	07/14
CHECKED BY :	P.A. de PAOLI	DATE :	07/14
DESIGN ENGINEER OF RECORD :	P.A. de PAOLI	DATE :	07/14

11/6/2015
11:22:16 AM
User: blanning
Filename: P:\NC Projects\2012 Archive\MI2002 - Div 09 Low Impact Bridge Replacement_RK&A\MI2002.01.Stokes 11 Cored Slab\17BP9R27\Structures\17BP9R27_SD_EBT2E.dgn

NOTES :

FOR BERM WIDTH DIMENSIONS, SEE GENERAL DRAWING.

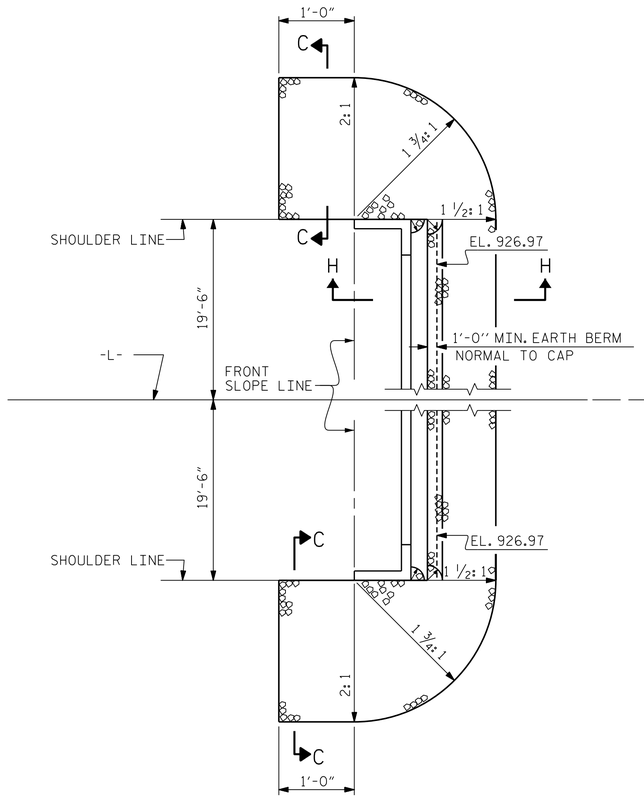

AT END BENT 1

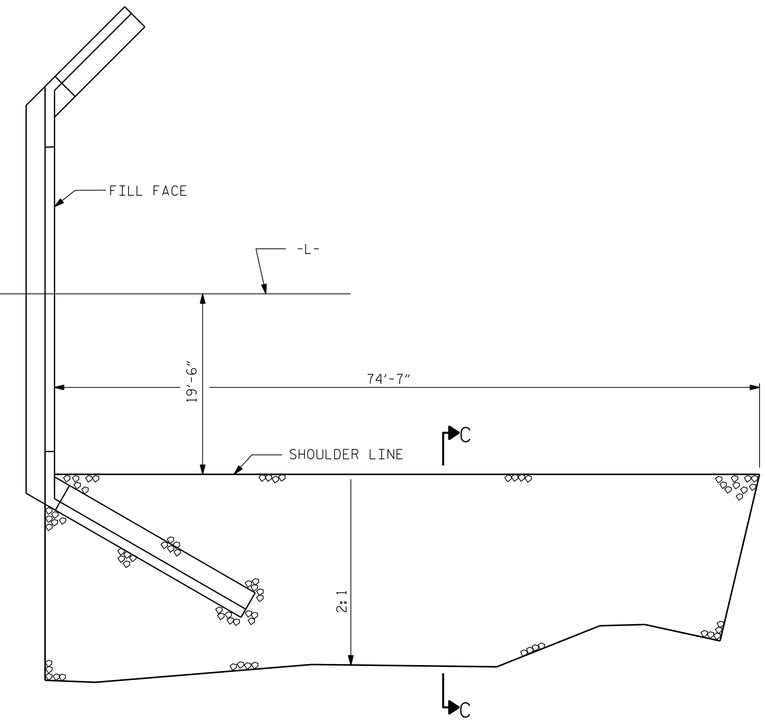

AT ABUTMENT 2

PLAN

ESTIMATED QUANTITIES		
BRIDGE @ STA. 13+12.50 -L-	RIP RAP CLASS II (2'-0" THICK)	GEOTEXTILE FOR DRAINAGE
	TONS	SQUARE YARDS
END BENT 1	149	166
ABUTMENT 2	157	175

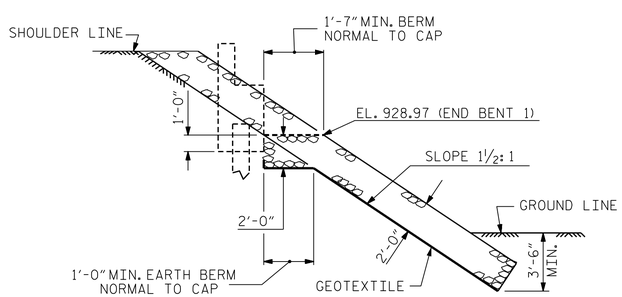

SECTION H-H

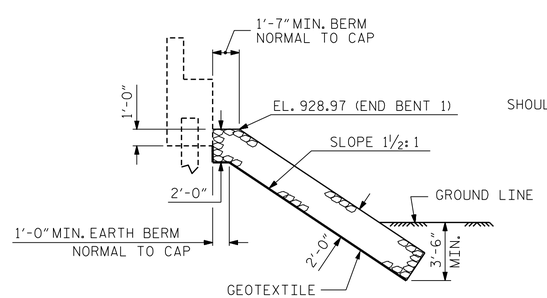

℄ SECTION

BERM RIP RAPPED

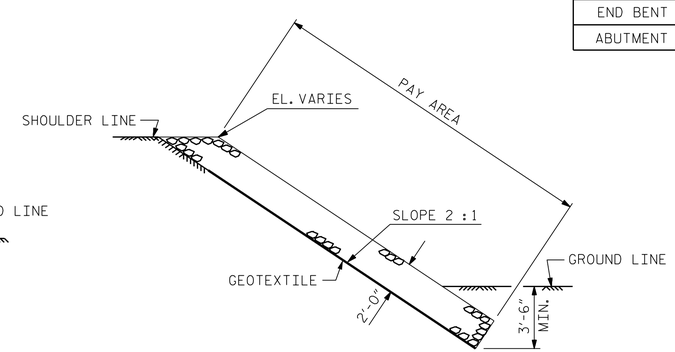

SECTION C-C

PROJECT NO. 17BP.9.R.27

STOKES COUNTY

STATION: 13+12.50 -L-

NORTH CAROLINA PROFESSIONAL ENGINEER SEAL 12323 MORRIS ISRAELNAIM

11/6/2015

STATE OF NORTH CAROLINA
DEPARTMENT OF TRANSPORTATION
RALEIGH

STANDARD

RIP RAP DETAILS

MI ENGINEERING
1011 SCHAUB DRIVE, SUITE 100
RALEIGH, NC 27606
(919) 851-6606
FIRM PE NUMBER : P-0671

REVISIONS						
NO.	BY:	DATE:	NO.	BY:	DATE:	
1			3			
2			4			

SHEET NO. S-19

TOTAL SHEETS 21

STD. NO. RR1 (Sht 2)

ASSEMBLED BY:	J.S. ISRAELNAIM	DATE:	12/12
CHECKED BY :	B.E. ATKINSON	DATE:	12/12
DESIGN ENGINEER OF RECORD:	P.A. de PAOLI	DATE:	07/14

DRAWN BY :	REK 1/84	REV. 5/1/06R	TLA/GM
CHECKED BY :	RDU 1/84	REV. 10/1/11	MAA/GM
		REV. 12/21/11	MAA/GM

11/6/2015
11:22:18 AM
User: blanning
Filename: P:\NC Projects\2012 Archive\M12002 - Div 09 Low Impact Bridge Replacement_RK&A\M12002.01.Stokes 11 Cored Slab\17BP9R27\Structures\17BP9R27_SD_RR1.dgn

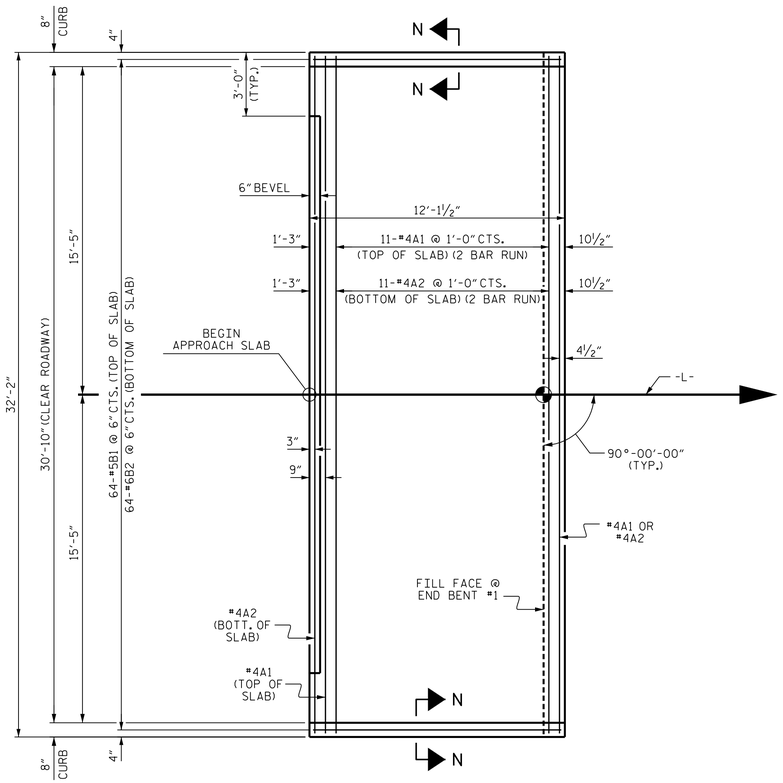

PLAN @ END BENT No. 1

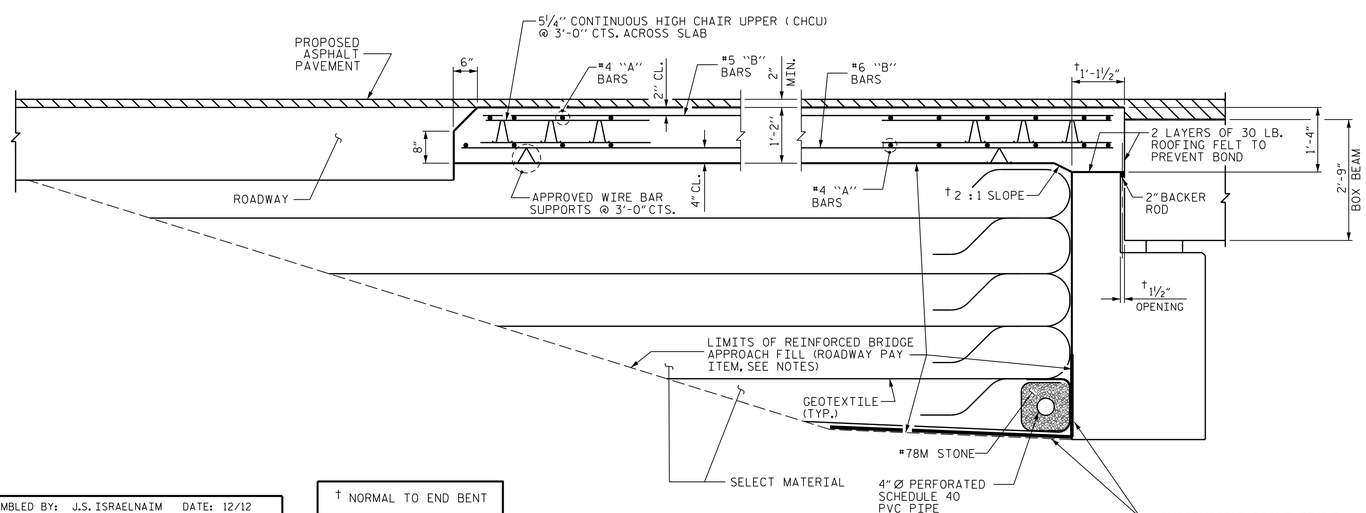

† NORMAL TO END BENT

SECTION THRU SLAB AT END BENT No. 1

NOTES

FOR REINFORCED BRIDGE APPROACH FILL INCLUDING GEOTEXTILE, IMPERMEABLE GEOMEMBRANE, 4" Ø DRAINAGE PIPE, #78M STONE, AND SELECT MATERIAL, SEE ROADWAY PLANS.

AREA BETWEEN THE WINGWALL AND APPROACH SLAB SHALL BE GRADED TO DRAIN THE WATER AWAY FROM THE FILL FACE OF THE BRIDGE AND SHALL BE PAVED. SEE ROADWAY PLANS.

APPROACH SLAB GROOVING IS NOT REQUIRED.

BILL OF MATERIAL

APPROACH SLAB AT EB #1

BAR	NO.	SIZE	TYPE	LENGTH	WEIGHT
* A1	26	#4	STR	16'-11"	294
A2	26	#4	STR	16'-9"	291
* B1	64	#5	STR	11'-2"	745
B2	64	#6	STR	11'-8"	1121
REINFORCING STEEL				LBS.	1412
* EPOXY COATED REINFORCING STEEL				LBS.	1039
CLASS AA CONCRETE				C. Y.	17.2

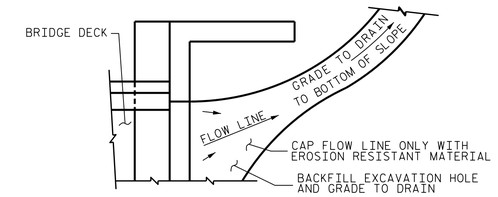

NOTE: IF THE APPROACH SLAB IS NOT CONSTRUCTED IMMEDIATELY AFTER THE BACKFILLING OF THE END BENT EXCAVATION, GRADE TO DRAIN TO THE BOTTOM OF THE SLOPE AND PROVIDE EROSION RESISTANT MATERIAL, SUCH AS FIBERGLASS ROVING OR AS DIRECTED BY THE ENGINEER TO PREVENT SOIL EROSION AND TO PROTECT THE AREA ADJACENT TO THE STRUCTURE. THE CONTRACTOR WILL BE REQUIRED TO REMOVE THESE MATERIALS PRIOR TO CONSTRUCTION OF THE APPROACH SLAB.

TEMPORARY DRAINAGE DETAIL

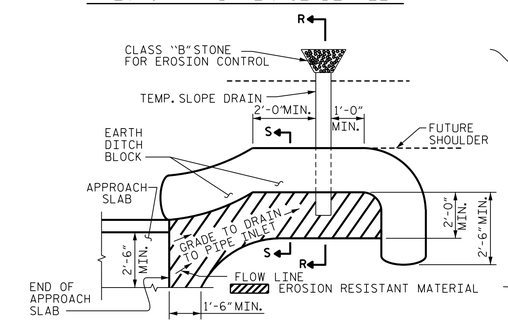

NOTE: IMMEDIATELY AFTER THE CONSTRUCTION OF THE APPROACH SLAB, THE CONTRACTOR SHALL PROVIDE TEMPORARY BERM AND SLOPE DRAIN. CONTRACTOR SHALL GRADE TO PIPE INLET AND PROVIDE EROSION RESISTANT MATERIAL AS SHOWN. THE EROSION RESISTANT MATERIAL SHALL BE EITHER 1) ASPHALT PLANT MIX, TYPE 1 OR TYPE 2, MIN. 2" DEPTH, 2) EROSION CONTROL MAT, OR 3) CONCRETE, AS DIRECTED BY THE ENGINEER. THE SLOPE DRAIN SHALL CONSIST OF A NON-PERFORATED TEMPORARY DRAINAGE PIPE, 12 INCHES IN DIAMETER.

PLAN VIEW

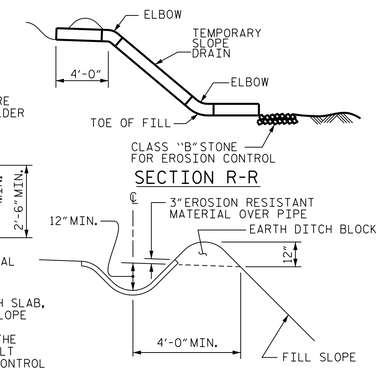

TEMPORARY BERM AND SLOPE DRAIN DETAILS

(TO BE USED WHEN SHOULDER BERM GUTTER IS REQUIRED)

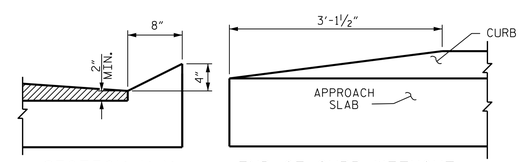

SECTION N-N

END OF CURB WITHOUT SHOULDER BERM GUTTER

CURB DETAILS

PROJECT NO. 17BP.9.R.27

STOKES COUNTY

STATION: 13+12.50 -L-

SPLICE LENGTHS

BAR SIZE	EPOXY COATED	UNCOATED
#4	2'-0"	1'-9"
#5	2'-6"	2'-2"
#6	3'-10"	2'-7"

NORTH CAROLINA PROFESSIONAL SEAL 12323 ENGINEER MORRIS ISRAELNAIM

11/6/2015

MI ENGINEERING
1011 SCHAUB DRIVE, SUITE 100
RALEIGH, NC 27606
(919) 851-6606
FIRM PE NUMBER : P-0671

STATE OF NORTH CAROLINA
DEPARTMENT OF TRANSPORTATION
RALEIGH

STANDARD
BRIDGE APPROACH SLAB
FOR PRESTRESSED CONCRETE
BOX BEAM UNIT
(SUB-REGIONAL TIER)
90° SKEW

REVISIONS							
NO.	BY:	DATE:	NO.	BY:	DATE:		
1			3				
2			4				

SHEET NO. S-20

TOTAL SHEETS 21

STD. NO. BAS_BB_33_90S

ASSEMBLED BY: J.S. ISRAELNAIM	DATE: 12/12
CHECKED BY : B.E. ATKINSON	DATE: 12/12
DESIGN ENGINEER OF RECORD: P.A. de PAOLI	DATE: 11/15
DRAWN BY : MAA 11/11	
CHECKED BY : AAC 11/11	

11/6/2015
11:22:20 AM
User: blanning
Filename: P:\NC Projects\2012 Archive\MI2002 - Div 09 Low Impact Bridge Replacement_RK&A\MI2002.01.Stokes 11 Cored Slab\17BP9R27\Structures\17BP9R27.SD.BAS1.dgn

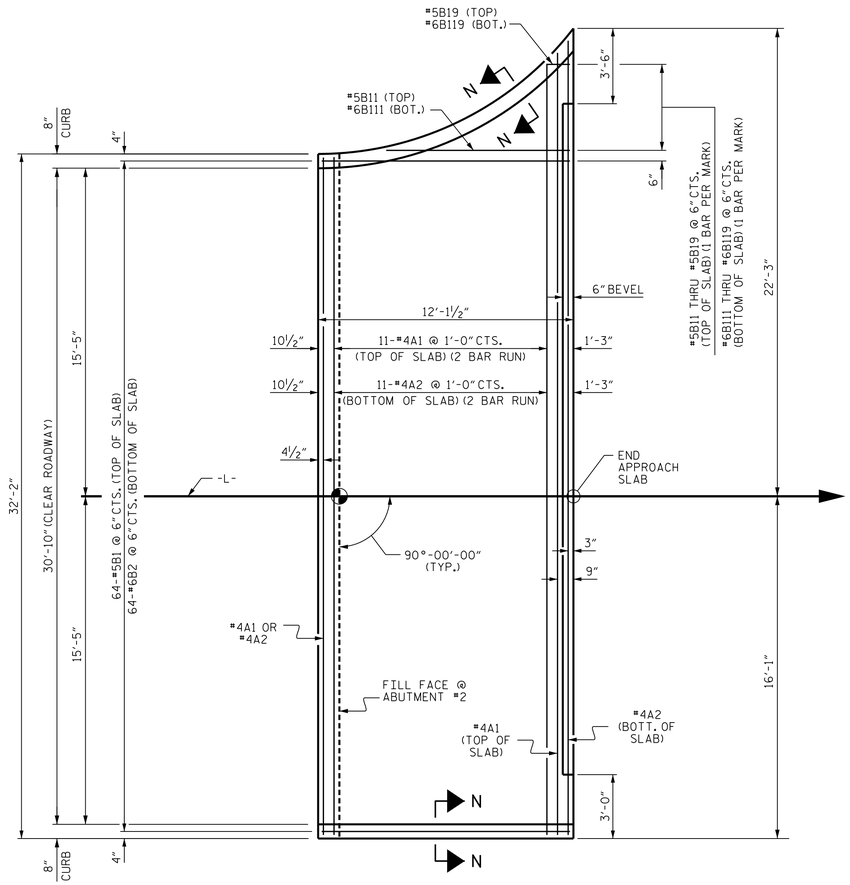

PLAN @ ABUTMENT No. 2

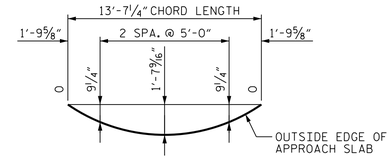

ARC OFFSETS - LEFT SIDE

NOTES

FOR NOTES, SEE SHEET S-20.

FOR TEMPORARY BERM AND SLOPE DRAIN DETAILS, SEE SHEET S-20.

BILL OF MATERIAL

APPROACH SLAB AT ABUTMENT #2

BAR	NO.	SIZE	TYPE	LENGTH	WEIGHT
✳ A1	26	#4	STR	19'-6"	339
A2	26	#4	STR	19'-8"	342
✳ B1	64	#5	STR	11'-2"	745
B2	64	#6	STR	11'-8"	1121
✳ B11	1	#5	STR	8'-3"	9
✳ B12	1	#5	STR	6'-6"	7
✳ B13	1	#5	STR	5'-2"	5
✳ B14	1	#5	STR	4'-2"	4
✳ B15	1	#5	STR	3'-4"	3
✳ B16	1	#5	STR	2'-7"	3
✳ B17	1	#5	STR	2'-5"	3
✳ B18	1	#5	STR	1'-10"	2
✳ B19	1	#5	STR	1'-4"	1
B111	1	#6	STR	8'-9"	13
B112	1	#6	STR	7'-0"	11
B113	1	#6	STR	5'-8"	9
B114	1	#6	STR	4'-8"	7
B115	1	#6	STR	3'-10"	6
B116	1	#6	STR	3'-1"	5
B117	1	#6	STR	2'-5"	4
B118	1	#6	STR	1'-10"	3
B119	1	#6	STR	1'-4"	2
REINFORCING STEEL				LBS.	1523
✳ EPOXY COATED REINFORCING STEEL				LBS.	1121
CLASS AA CONCRETE				C. Y.	18.2

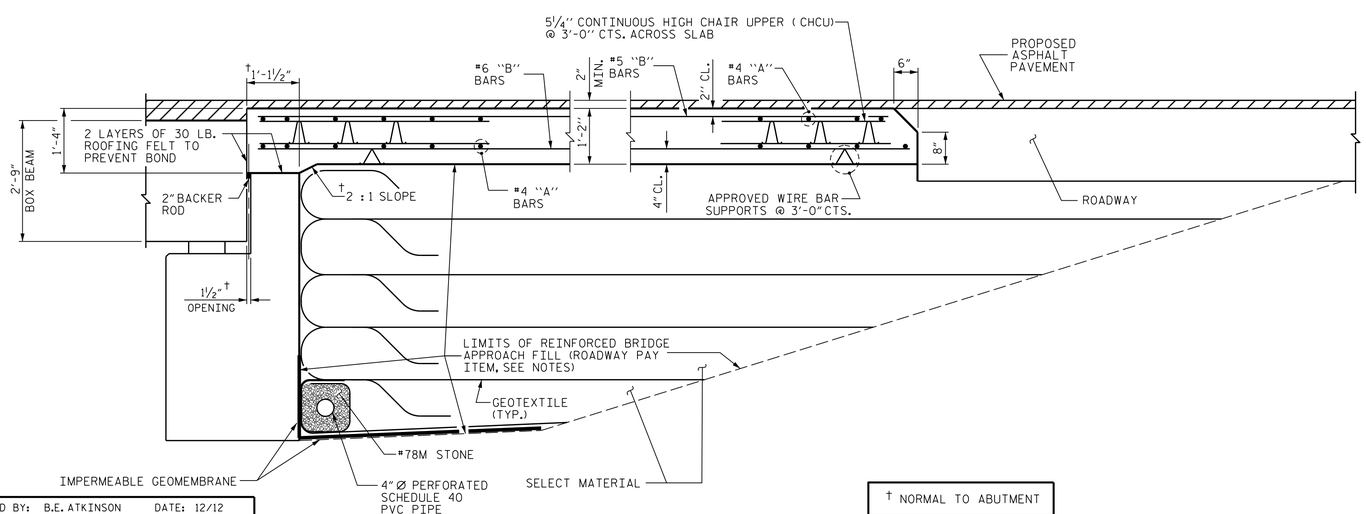

† NORMAL TO ABUTMENT

SECTION THRU SLAB AT ABUTMENT No. 2

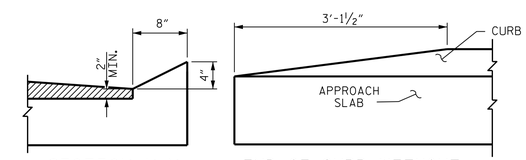

SECTION N-N

END OF CURB WITHOUT SHOULDER BERM GUTTER

CURB DETAILS

SPLICE LENGTHS		
BAR SIZE	EPOXY COATED	UNCOATED
#4	2'-0"	1'-9"
#5	2'-6"	2'-2"
#6	3'-10"	2'-7"

PROJECT NO. 17BP.9.R.27

STOKES COUNTY

STATION: 13+12.50 -L-

STATE OF NORTH CAROLINA
DEPARTMENT OF TRANSPORTATION
RALEIGH

BRIDGE APPROACH SLAB FOR PRESTRESSED CONCRETE BOX BEAM UNIT AT ABUTMENT No. 2

90° SKEW

NORTH CAROLINA PROFESSIONAL ENGINEER SEAL 12323 MORRIS ISRAELNAIM

11/6/2015

MI ENGINEERING
1011 SCHAUB DRIVE, SUITE 100
RALEIGH, NC 27606
(919) 851-6606
FIRM PE NUMBER : P-0671

REVISIONS							
NO.	BY:	DATE:	NO.	BY:	DATE:	SHEET NO.	S-21
1			3			TOTAL SHEETS	21
2			4				

ASSEMBLED BY:	B.E. ATKINSON	DATE: 12/12
CHECKED BY :	J.S. ISRAELNAIM	DATE: 12/12
DESIGN ENGINEER OF RECORD:	P.A. de PAOLI	DATE: 07/14
DRAWN BY : MAA	11/11	
CHECKED BY : AAC	11/11	

STD. NO. BAS_BB_33_90S

11/6/2015
11:22:22 AM
User: planning
Filename: P:\NC Projects\2012 Archive\MI2002 - Div 09 Low Impact Bridge Replacement_RK&A\MI2002.01.Stokes 11 Cored Slab\17BP9R27\Structures\17BP9R27.SD.BAS2.dgn

STANDARD NOTES

DESIGN DATA:

SPECIFICATIONS	A.A.S.H.T.O. (CURRENT)
LIVE LOAD	SEE PLANS
IMPACT ALLOWANCE	SEE A.A.S.H.T.O.
STRESS IN EXTREME FIBER OF	
STRUCTURAL STEEL - AASHTO M270 GRADE 36	20,000 LBS. PER SQ. IN.
- AASHTO M270 GRADE 50W	27,000 LBS. PER SQ. IN.
- AASHTO M270 GRADE 50	27,000 LBS. PER SQ. IN.
REINFORCING STEEL IN TENSION	
GRADE 60	24,000 LBS. PER SQ. IN.
CONCRETE IN COMPRESSION	1,200 LBS. PER SQ. IN.
CONCRETE IN SHEAR	SEE A.A.S.H.T.O.
STRUCTURAL TIMBER - TREATED OR	
UNTREATED - EXTREME FIBER STRESS	1,800 LBS. PER SQ. IN.
COMPRESSION PERPENDICULAR TO GRAIN OF TIMBER	375 LBS. PER SQ. IN.
EQUIVALENT FLUID PRESSURE OF EARTH	30 LBS. PER CU. FT. (MINIMUM)

MATERIAL AND WORKMANSHIP:

EXCEPT AS MAY OTHERWISE BE SPECIFIED ON PLANS OR IN THE SPECIAL PROVISIONS, ALL MATERIAL AND WORKMANSHIP SHALL BE IN ACCORDANCE WITH THE 2012 "STANDARD SPECIFICATIONS FOR ROADS AND STRUCTURES" OF THE N. C. DEPARTMENT OF TRANSPORTATION.

STEEL SHEET PILING FOR PERMANENT OR TEMPORARY APPLICATIONS SHALL BE HOT ROLLED.

CONCRETE:

UNLESS OTHERWISE REQUIRED ON PLANS, CLASS A CONCRETE SHALL BE USED FOR ALL PORTIONS OF ALL STRUCTURES WITH THE EXCEPTION THAT: CLASS AA CONCRETE SHALL BE USED IN BRIDGE SUPERSTRUCTURES, ABUTMENT BACKWALLS, AND APPROACH SLABS; AND CLASS B CONCRETE SHALL BE USED FOR SLOPE PROTECTION AND RIP RAP.

CONCRETE CHAMFERS:

UNLESS OTHERWISE NOTED ON THE PLANS, ALL EXPOSED CORNERS ON STRUCTURES SHALL BE CHAMFERED 3/4" WITH THE FOLLOWING EXCEPTIONS: TOP CORNERS OF CURBS MAY BE ROUNDED TO 1-1/2" RADIUS WHICH IS BUILT INTO CURB FORMS; CORNERS OF TRANSVERSE FLOOR EXPANSION JOINTS SHALL BE ROUNDED WITH A 1/4" FINISHING TOOL UNLESS OTHERWISE REQUIRED ON PLANS; AND CORNERS OF EXPANSION JOINTS IN THE ROADWAY FACES AND TOPS OF CURBS AND SIDEWALKS SHALL BE ROUNDED TO A 1/4" RADIUS WITH A FINISHING STONE OR TOOL UNLESS OTHERWISE REQUIRED ON PLANS.

DOWELS:

DOWELS WHEN INDICATED ON PLANS AS FOR CULVERT EXTENSIONS, SHALL BE EMBEDDED AT LEAST 12" INTO THE OLD CONCRETE AND GROUTED INTO PLACE WITH 1:2 CEMENT MORTAR.

ALLOWANCE FOR DEAD LOAD DEFLECTION, SETTLEMENT, ETC. IN CASTING SUPERSTRUCTURES:

BRIDGES SHALL BE BUILT ON THE GRADE OR VERTICAL CURVE SHOWN ON PLANS. SLABS, CURBS AND PARAPETS SHALL CONFORM TO THE GRADE OR CURVE.

ALL DIMENSIONS WHICH ARE GIVEN IN SECTION AND ARE AFFECTED BY DEAD LOAD DEFLECTIONS ARE DIMENSIONS AT CENTER LINE OF BEARING UNLESS OTHERWISE NOTED ON PLANS. IN SETTING FORMS FOR STEEL BEAM BRIDGES AND PRESTRESSED CONCRETE GIRDER BRIDGES, ADJUSTMENTS SHALL BE MADE DUE TO THE DEAD LOAD DEFLECTIONS FOR THE ELEVATIONS SHOWN. WHERE BLOCKS ARE SHOWN OVER BEAMS FOR BUILDING UP TO THE SLAB, THE VERTICAL DIMENSIONS OF THE BLOCKS SHALL BE ADJUSTED BETWEEN BEARINGS TO COMPENSATE FOR DEAD LOAD DEFLECTIONS, VERTICAL CURVE ORDINATE, AND ACTUAL BEAM CAMBER. WHERE BOTTOM OF SLAB IS IN LINE WITH BOTTOM OF TOP FLANGES, DEPTH OF SLAB BETWEEN BEARINGS SHALL BE ADJUSTED TO COMPENSATE FOR DEAD LOAD DEFLECTION, VERTICAL CURVE ORDINATE, AND ACTUAL BEAM CAMBER.

IN SETTING FALSEWORK AND FORMS FOR REINFORCED CONCRETE SPANS, AN ALLOWANCE SHALL BE MADE FOR DEAD LOAD DEFLECTIONS, SETTLEMENT OF FALSEWORK, AND PERMANENT CAMBER WHICH SHALL BE PROVIDED FOR IN ADDITION TO THE ELEVATIONS SHOWN. AFTER REMOVAL OF THE FALSEWORK, THE FINISHED STRUCTURES SHALL CONFORM TO THE PROFILE AND ELEVATIONS SHOWN ON THE PLANS AND CONSTRUCTION ELEVATIONS FURNISHED BY THE ENGINEER.

DETAILED DRAWINGS FOR FALSEWORK OR FORMS FOR BRIDGE SUPERSTRUCTURE AND ANY STRUCTURE OR PARTS OF A STRUCTURE AS NOTED ON THE PLANS SHALL BE SUBMITTED TO THE ENGINEER FOR APPROVAL BEFORE CONSTRUCTION OF THE FALSEWORK OR FORMS IS STARTED.

REINFORCING STEEL:

ALL REINFORCING STEEL SHALL BE DEFORMED. DIMENSIONS RELATIVE TO PLACEMENT OF REINFORCING ARE TO CENTERS OF BARS UNLESS OTHERWISE INDICATED IN THE PLANS. DIMENSIONS ON BAR DETAILS ARE TO CENTERS OF BARS OR ARE OUT TO OUT AS INDICATED ON PLANS.

WIRE BAR SUPPORTS SHALL BE PROVIDED FOR REINFORCING STEEL WHERE INDICATED ON THE PLANS. WHEN BAR SUPPORT PIECES ARE PLACED IN CONTINUOUS LINES, THEY SHALL BE SO PLACED THAT THE ENDS OF THE SUPPORTING WIRES SHALL BE LAPPED TO LOCK LEGS ON ADJOINING PIECES.

STRUCTURAL STEEL:

AT THE CONTRACTOR'S OPTION, HE MAY SUBSTITUTE 7/8" Ø SHEAR STUDS FOR THE 3/4" Ø STUDS SPECIFIED ON THE PLANS. THIS SUBSTITUTION SHALL BE MADE AT THE RATE OF 3 - 7/8" Ø STUDS FOR 4 - 3/4" Ø STUDS, AND STUD SPACING CHANGES SHALL BE MADE AS NECESSARY TO PROVIDE THE SAME EQUIVALENT NUMBER OF 7/8" Ø STUDS ALONG THE BEAM AS SHOWN FOR 3/4" Ø STUDS BASED ON THE RATIO OF 3 - 7/8" Ø STUDS FOR 4 - 3/4" Ø STUDS. STUDS OF THE LENGTH SPECIFIED ON THE PLANS MUST BE PROVIDED. THE MAXIMUM SPACING SHALL BE 2'-0".

EXCEPT AT THE INTERIOR SUPPORTS OF CONTINUOUS BEAMS WHERE THE COVER PLATE IS IN CONTACT WITH BEARING PLATE, THE CONTRACTOR MAY, AT HIS OPTION, SUBSTITUTE FOR THE COVER PLATES DESIGNATED ON THE PLANS COVER PLATES OF THE EQUIVALENT AREA PROVIDED THESE PLATES ARE AT LEAST 5/16" IN THICKNESS AND DO NOT EXCEED A WIDTH EQUAL TO THE FLANGE WIDTH LESS 2" OR A THICKNESS EQUAL TO 2 TIMES THE FLANGE THICKNESS. THE SIZE OF FILLET WELDS SHALL CONFORM TO THE REQUIREMENTS OF THE CURRENT ANSI/AASHTO/AWS "BRIDGE WELDING CODE". ELECTROSLAG WELDING WILL NOT BE PERMITTED.

WITH THE SOLE EXCEPTION OF EDGES AT SURFACES WHICH BEAR ON OTHER SURFACES, ALL SHARP EDGES AND ENDS OF SHAPES AND PLATES SHALL BE SLIGHTLY ROUNDED BY SUITABLE MEANS TO A RADIUS OF APPROXIMATELY 1/16 INCH OR EQUIVALENT FLAT SURFACE AT A SUITABLE ANGLE PRIOR TO PAINTING, GALVANIZING, OR METALLIZING.

HANDRAILS AND POSTS:

METAL STANDARDS AND FACES OF THE CONCRETE END POSTS FOR THE METAL RAIL SHALL BE SET NORMAL TO THE GRADE OF THE CURB, UNLESS OTHERWISE SHOWN ON PLANS. THE METAL RAIL AND TOPS OF CONCRETE POSTS USED WITH THE ALUMINUM RAIL SHALL BE BUILT PARALLEL TO THE GRADE OF THE CURB.

METAL HANDRAILS SHALL BE IN ACCORDANCE WITH THE PLANS. RAILS SHALL BE AS MANUFACTURED FOR BRIDGE RAILING. CASTINGS SHALL BE OF A UNIFORM APPEARANCE. FINS AND OTHER DEFORMATIONS RESULTING FROM CASTING OR OTHERWISE SHALL BE REMOVED IN A MANNER SO THAT A UNIFORM COLORING OF THE COMPLETED CASTING SHALL BE OBTAINED. CASTINGS WITH DISCOLORATIONS OR OF NON-UNIFORM COLORING WILL NOT BE ACCEPTED. CERTIFIED MILL REPORTS ARE REQUIRED FOR METAL RAILS AND POSTS.

SPECIAL NOTES:

GENERALLY, IN CASE OF DISCREPANCY, THIS STANDARD SHEET OF NOTES SHALL GOVERN OVER THE SPECIFICATIONS, BUT THE REMAINDER OF THE PLANS SHALL GOVERN OVER NOTES HEREON, AND SPECIAL PROVISIONS SHALL GOVERN OVER ALL. SEE SPECIFICATIONS ARTICLE 105-4.

ENGLISH

JANUARY, 1990