09/08/99

TIP PROJECT: BD-5109AD

CONTRACT: DI00082

See Sheet 1-A For Index of Sheets
See Sheet 1-B For Symbology Sheet

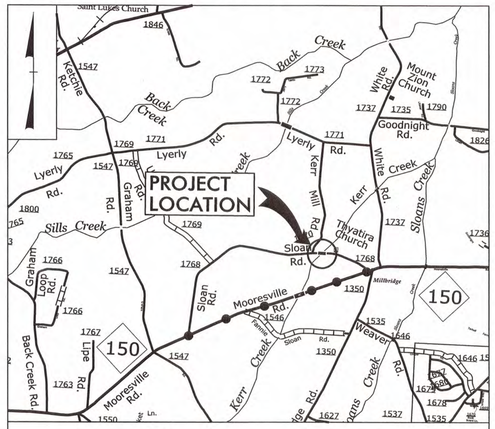

VICINITY MAP

DETOUR ROUTE

STATE OF NORTH CAROLINA
DIVISION OF HIGHWAYS

ROWAN COUNTY

LOCATION: BRIDGE NO. 14 OVER KERR CREEK ON SR 1768

TYPE OF WORK: GRADING, DRAINAGE, PAVEMENT MARKINGS AND STRUCTURE

STATE	STATE PROJECT REFERENCE NO.	SHEET NO.	TOTAL SHEETS
N.C.	BD-5109AD	1	

STATE PROJ. NO.	F. A. PROJ. NO.	DESCRIPTION
45355.1.30	BRZ-1768(2)	PE
45355.2.FD30	BRZ-1768(2)	R/W, UTILITIES
45355.3.FD30	BRZ-1768(2)	CONSTR.

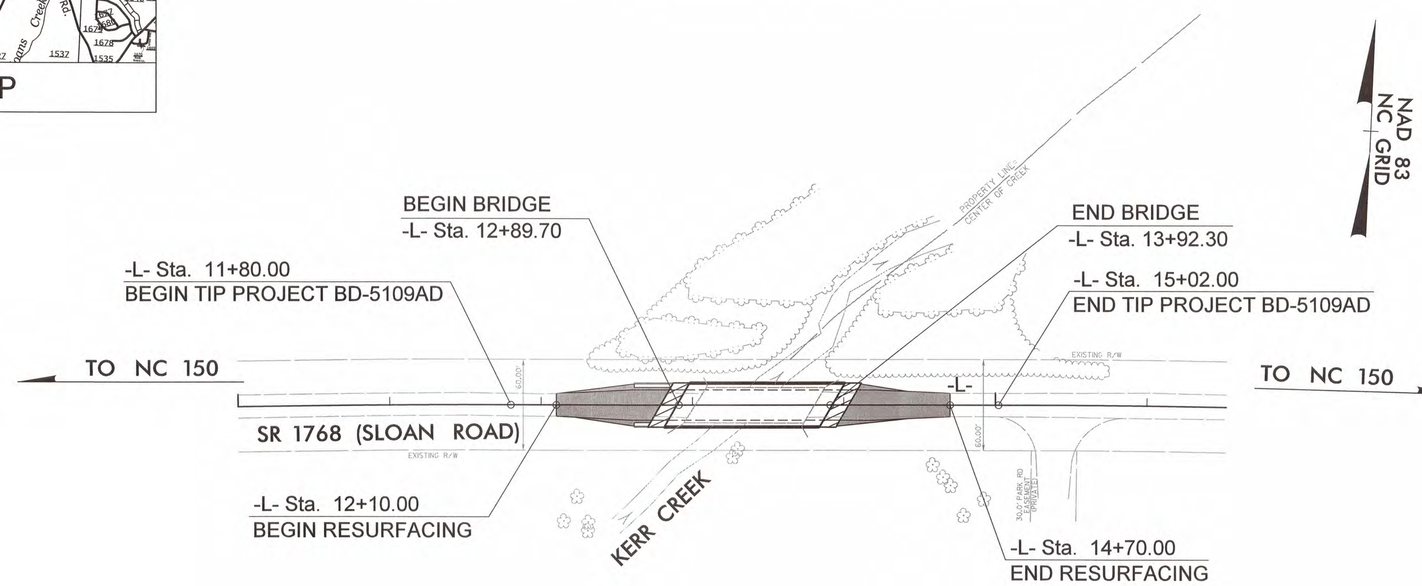

GRAPHIC SCALES

50 25 0 50 100
PLANS

50 25 0 50 100
PROFILE (HORIZONTAL)

10 5 0 10 20
PROFILE (VERTICAL)

DESIGN DATA

ADT 2009 = 110
V = 55 MPH *

* STATUTORY SPEED LIMIT

PROJECT LENGTH

LENGTH ROADWAY TIP PROJECT BD-5109AD	=	0.042 MI
LENGTH STRUCTURE TIP PROJECT BD-5109AD	=	0.019 MI
TOTAL LENGTH TIP PROJECT BD-5109AD	=	0.061 MI

PLANS PREPARED BY:
PARSONS BRINCKERHOFF
434 FAYETTEVILLE STREET
SUITE 1500
RALEIGH, NC 27601
LICENSE NO. F-0165

2012 STANDARD SPECIFICATIONS

RIGHT OF WAY DATE:
SEPTEMBER 3, 2014

LETTING DATE:
JANUARY 28, 2015

NCDOT CONTACT:

PLANS PREPARED FOR:
DIVISION OF HIGHWAYS
1000 Birch Ridge Dr.
Raleigh NC, 27610

TIM HAYES, PE
PROJECT ENGINEER

LAUREN WILSON, EI
PROJECT DESIGN ENGINEER

MATT JONES, PE
DIVISION BRIDGE - PROGRAM MANAGER

HYDRAULICS ENGINEER
NORTH CAROLINA PROFESSIONAL SEAL 032312 ENGINEER CHARLES W. HEARNE
SIGNATURE: 12/16/14 P.E.

ROADWAY DESIGN ENGINEER
NORTH CAROLINA PROFESSIONAL SEAL 19603 ENGINEER SCOTT HAMMONS
SIGNATURE: 12/11/14 P.E.

STATE OF NORTH CAROLINA DEPARTMENT OF TRANSPORTATION

8:43:40 AM
BD-5109AD_Rdy_tsh.dgn
12/11/2014

PROJECT REFERENCE NO.	SHEET NO.
BD-5109AD	1-A

ROADWAY DESIGN ENGINEER

NORTH CAROLINA PROFESSIONAL SEAL 19563 ENGINEER TIMOTHY SCOTT HAYES 12/19/14

INDEX OF SHEETS

SHEET NUMBER	SHEET
1	TITLE SHEET
1-A	INDEX OF SHEETS, GENERAL NOTES AND LIST OF STANDARD DRAWINGS
1-B	CONVENTIONAL SYMBOLS
1C-1 THRU 1C-2	SURVEY CONTROL SHEETS
2	PAVEMENT SCHEDULE, TYPICAL SECTIONS, AND WEDGING DETAIL
2-A	STRUCTURAL ANCHOR UNIT TYPE III
3	LIST OF PIPES, ENDWALLS, ETC. (FOR PIPES 48" & UNDER), GUARDRAIL SUMMARY, SUMMARY OF EARTHWORK, ASPHALT PAVEMENT REMOVAL SUMMARY AND SHOULDER BERM GUTTER SUMMARY
4	PLAN AND PROFILE SHEET
TCP-1 THRU TCP-2	TRAFFIC CONTROL PLANS
EC-1 THRU EC-3	EROSION CONTROL PLANS
RF-1	REFORESTATION DETAIL SHEET
UO-1 THRU UO-2	UTILITIES BY OTHERS PLANS
X-1 THRU X-3	CROSS-SECTIONS
S-1 THRU S-17	STRUCTURE PLANS
SN	STRUCTURE STANDARD NOTES

2012 ROADWAY ENGLISH STANDARD DRAWINGS

The following Roadway Standards as appear in "Roadway Standard Drawings" Highway Design Branch - N. C. Department of Transportation - Raleigh, N. C., Dated January, 2012 are applicable to this project and by reference hereby are considered a part of these plans:

STD.NO.	TITLE
DIVISION 2 - EARTHWORK	
200.03	Method of Clearing - Method III
225.02	Guide for Grading Subgrade - Secondary and Local
225.04	Method of Obtaining Superelevation - Two Lane Pavement
DIVISION 3 - PIPE CULVERTS	
300.01	Method of Pipe Installation
DIVISION 4 - MAJOR STRUCTURES	
422.11	Reinforced Bridge Approach Fills - Sub Regional Tier
DIVISION 5 - SUBGRADE, BASES AND SHOULDERS	
560.01	Method of Shoulder Construction - High Side of Superelevated Curve - Method I
DIVISION 8 - INCIDENTALS	
806.01	Concrete Right-of-Way Marker
806.02	Granite Right-of-Way Marker
815.03	Pipe Underdrain and Blind Drain
840.00	Concrete Base Pad for Drainage Structures
840.25	Anchorage for Frames - Brick or Concrete or Precast
840.29	Frames and Narrow Slot Flat Grates
840.35	Traffic Bearing Grated Drop Inlet - for Cast Iron Double Frame and Grates
846.01	Concrete Curb, Gutter and Curb & Gutter
846.04	Drop Inlet Installation in Shoulder Berm Gutter
862.01	Guardrail Placement
862.02	Guardrail Installation
862.03	Structure Anchor Units
876.02	Guide for Rip Rap at Pipe Outlets

GENERAL NOTES:

2012 SPECIFICATIONS
EFFECTIVE: 01-17-12
REVISED: 11/01/11

GRADING AND SURFACING OR RESURFACING AND WIDENING:

THE GRADE LINES SHOWN DENOTE THE FINISHED ELEVATION OF THE PROPOSED SURFACING AT GRADE POINTS SHOWN ON THE TYPICAL SECTIONS. WHERE NO GRADE LINES ARE SHOWN, THE PROFILES SHOWN DENOTE THE TOP ELEVATION OF THE EXISTING PAVEMENT ALONG THE CENTER LINE OF SURVEY ON WHICH THE PROPOSED RESURFACING WILL BE PLACED. GRADE LINES MAY BE ADJUSTED BY THE ENGINEER IN ORDER TO SECURE A PROPER TIE-IN.

CLEARING:

CLEARING ON THIS PROJECT SHALL BE PERFORMED TO THE LIMITS ESTABLISHED BY METHOD III.

SUPERELEVATION:

ALL CURVES ON THIS PROJECT SHALL BE SUPERELEVATED IN ACCORDANCE WITH STD. NO. 225.04 USING THE RATE OF SUPERELEVATION AND RUNOFF SHOWN ON THE PLANS. SUPERELEVATION IS TO BE REVOLVED ABOUT THE GRADE POINTS SHOWN ON THE TYPICAL SECTIONS.

SHOULDER CONSTRUCTION:

ASPHALT, EARTH, AND CONCRETE SHOULDER CONSTRUCTION ON THE HIGH SIDE OF SUPERELEVATED CURVES SHALL BE IN ACCORDANCE WITH STD. NO. 560.01.

UNDERDRAINS:

UNDERDRAINS SHALL BE CONSTRUCTED IN ACCORDANCE WITH STD. NO. 815.03 AT LOCATIONS DIRECTED BY THE ENGINEER.

GUARDRAIL:

THE GUARDRAIL LOCATIONS SHOWN ON THE PLANS MAY BE ADJUSTED DURING CONSTRUCTION AS DIRECTED BY THE ENGINEER. THE CONTRACTOR SHOULD CONSULT WITH THE ENGINEER PRIOR TO ORDERING GUARDRAIL MATERIAL.

END BENTS:

THE ENGINEER SHALL CHECK THE STRUCTURE END BENT PLANS, DETAILS, AND CROSS-SECTION PRIOR TO SETTING OF THE SLOPE STAKES FOR THE EMBANKMENT OR EXCAVATION APPROACHING A BRIDGE.

UTILITIES:

UTILITY OWNERS ON THIS PROJECT ARE: (A) POWER: DUKE ENERGY: LARRY ROBINSON 336-209-6631
(B) PHONE: AT&T: SUSAN ALLEN 704-732-3241 EXT 222

ANY RELOCATION OF EXISTING UTILITIES WILL BE ACCOMPLISHED BY OTHERS.

RIGHT-OF-WAY MARKERS:

ALL RIGHT-OF-WAY MARKERS ON THIS PROJECT SHALL BE PLACED BY CONTRACT.

12/05/11

PROJECT REFERENCE NO.	SHEET NO.
BD-5109AD	1-B

Note: Not to Scale

****S.U.E. = Subsurface Utility Engineering***

STATE OF NORTH CAROLINA
DIVISION OF HIGHWAYS

CONVENTIONAL PLAN SHEET SYMBOLS

BOUNDARIES AND PROPERTY:

- State Line
- County Line
- Township Line
- City Line
- Reservation Line
- Property Line
- Existing Iron Pin — EIP
- Property Corner
- Property Monument — ECM
- Parcel/Sequence Number — 123
- Existing Fence Line
- Proposed Woven Wire Fence
- Proposed Chain Link Fence
- Proposed Barbed Wire Fence
- Existing Wetland Boundary — WLB
- Proposed Wetland Boundary — WLB
- Existing Endangered Animal Boundary — EAB
- Existing Endangered Plant Boundary — EPB
- Known Soil Contamination: Area or Site
- Potential Soil Contamination: Area or Site

BUILDINGS AND OTHER CULTURE:

- Gas Pump Vent or U/G Tank Cap
- Sign — S
- Well — W
- Small Mine
- Foundation
- Area Outline
- Cemetery
- Building
- School
- Church
- Dam

HYDROLOGY:

- Stream or Body of Water
- Hydro, Pool or Reservoir
- Jurisdictional Stream — JS
- Buffer Zone 1 — BZ 1
- Buffer Zone 2 — BZ 2
- Flow Arrow
- Disappearing Stream
- Spring
- Wetland
- Proposed Lateral, Tail, Head Ditch — FLOW
- False Sump

RAILROADS:

- Standard Gauge — CSX TRANSPORTATION
- RR Signal Milepost — MILEPOST 35
- Switch — SWITCH
- RR Abandoned
- RR Dismantled

RIGHT OF WAY:

- Baseline Control Point
- Existing Right of Way Marker
- Existing Right of Way Line
- Proposed Right of Way Line — RW
- Proposed Right of Way Line with Iron Pin and Cap Marker — RW
- Proposed Right of Way Line with Concrete or Granite R/W Marker — RW
- Proposed Control of Access Line with Concrete C/A Marker — CA
- Existing Control of Access — CA
- Proposed Control of Access — CA
- Existing Easement Line — E
- Proposed Temporary Construction Easement — E
- Proposed Temporary Drainage Easement — TDE
- Proposed Permanent Drainage Easement — PDE
- Proposed Permanent Drainage / Utility Easement — DUE
- Proposed Permanent Utility Easement — PUE
- Proposed Temporary Utility Easement — TUE
- Proposed Aerial Utility Easement — AUE
- Proposed Permanent Easement with Iron Pin and Cap Marker

ROADS AND RELATED FEATURES:

- Existing Edge of Pavement
- Existing Curb
- Proposed Slope Stakes Cut — C
- Proposed Slope Stakes Fill — F
- Proposed Curb Ramp — CR
- Existing Metal Guardrail
- Proposed Guardrail
- Existing Cable Guiderail
- Proposed Cable Guiderail
- Equality Symbol
- Pavement Removal

VEGETATION:

- Single Tree
- Single Shrub
- Hedge
- Woods Line
- Orchard
- Vineyard — Vineyard

EXISTING STRUCTURES:

MAJOR:

- Bridge, Tunnel or Box Culvert — CONC
- Bridge Wing Wall, Head Wall and End Wall — CONC WW

MINOR:

- Head and End Wall — CONC HW
- Pipe Culvert
- Footbridge
- Drainage Box: Catch Basin, DI or JB — CB
- Paved Ditch Gutter
- Storm Sewer Manhole — S
- Storm Sewer — S

UTILITIES:

POWER:

- Existing Power Pole
- Proposed Power Pole
- Existing Joint Use Pole
- Proposed Joint Use Pole
- Power Manhole — P
- Power Line Tower
- Power Transformer
- U/G Power Cable Hand Hole
- H-Frame Pole
- Recorded U/G Power Line — P
- Designated U/G Power Line (S.U.E.*) — P

TELEPHONE:

- Existing Telephone Pole
- Proposed Telephone Pole
- Telephone Manhole — T
- Telephone Booth
- Telephone Pedestal — T
- Telephone Cell Tower
- U/G Telephone Cable Hand Hole — HH
- Recorded U/G Telephone Cable — T
- Designated U/G Telephone Cable (S.U.E.*) — T
- Recorded U/G Telephone Conduit — TC
- Designated U/G Telephone Conduit (S.U.E.*) — TC
- Recorded U/G Fiber Optics Cable — T FO
- Designated U/G Fiber Optics Cable (S.U.E.*) — T FO

WATER:

- Water Manhole — W
- Water Meter
- Water Valve
- Water Hydrant
- Recorded U/G Water Line — W
- Designated U/G Water Line (S.U.E.*) — W
- Above Ground Water Line — A/G Water

TV:

- TV Satellite Dish
- TV Pedestal — C
- TV Tower
- U/G TV Cable Hand Hole — HH
- Recorded U/G TV Cable — TV
- Designated U/G TV Cable (S.U.E.*) — TV
- Recorded U/G Fiber Optic Cable — TV FO
- Designated U/G Fiber Optic Cable (S.U.E.*) — TV FO

GAS:

- Gas Valve
- Gas Meter
- Recorded U/G Gas Line — G
- Designated U/G Gas Line (S.U.E.*) — G
- Above Ground Gas Line — A/G Gas

SANITARY SEWER:

- Sanitary Sewer Manhole
- Sanitary Sewer Cleanout
- U/G Sanitary Sewer Line — SS
- Above Ground Sanitary Sewer — A/G Sanitary Sewer
- Recorded SS Forced Main Line — FSS
- Designated SS Forced Main Line (S.U.E.*) — FSS

MISCELLANEOUS:

- Utility Pole
- Utility Pole with Base
- Utility Located Object
- Utility Traffic Signal Box — S
- Utility Unknown U/G Line — ?UTL
- U/G Tank; Water, Gas, Oil
- Underground Storage Tank, Approx. Loc. — UST
- A/G Tank; Water, Gas, Oil
- Geoenvironmental Boring
- U/G Test Hole (S.U.E.*)
- Abandoned According to Utility Records — AATUR
- End of Information — E.O.I.

PROJECT REFERENCE NO.	SHEET NO.
BD5109AD	1C-1
Location and Surveys	

SURVEY CONTROL SHEET BD5109AD

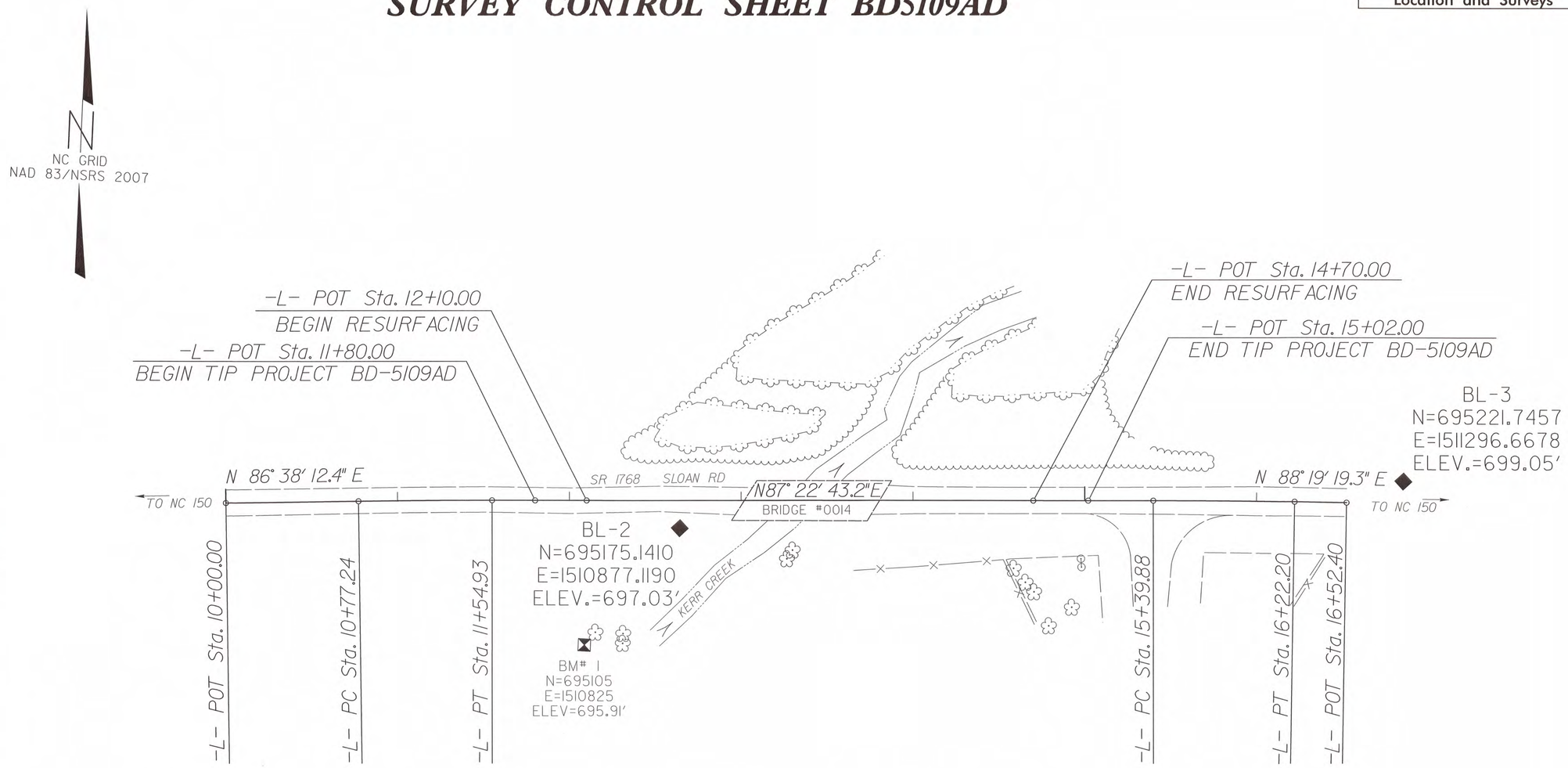

BL

POINT	DESC.	NORTH	EAST	ELEVATION	EL STATION	OFFSET
1	BL-1	695184.4790	1510432.3740	706.66	OUTSIDE PROJECT LIMITS	
2	BL-2	695175.1410	1510877.1190	697.03	12+64.21	16.10 RT
3	BL-3	695221.7457	1511296.6678	699.05	OUTSIDE PROJECT LIMITS	

```
*****************************************
BM#1        ELEVATION = 695.91'
N 695105       E 1510825
EL STATION 12+09.00 84 RIGHT
R/R SPIKE SET IN ROOT OF 24" FORKED ELM
TREE APPROXIMATELY 20' WEST OF WEST
BANK OF KERR CREEK.
*****************************************
*****************************************
BM#2        ELEVATION = 706.66'
N 695184       E 1510432
COURSE FROM -EL- STA. 5+00 TO BM2
N 87°49'32.6" W       180.29'
ALUMINUM CAP AND REBAR.
BM2-BL-1
*****************************************
```

DATUM DESCRIPTION

THE LOCALIZED COORDINATE SYSTEM DEVELOPED FOR THIS PROJECT IS BASED ON THE STATE PLANE COORDINATES ESTABLISHED BY NCGS FOR MONUMENT "BL-1"
WITH NAD 83/NSRS 2007 STATE PLANE GRID COORDINATES OF
NORTHING: 695184.479(ft) EASTING: 1510432.374(ft)
ELEVATION: 706.66(ft)
THE AVERAGE COMBINED GRID FACTOR USED ON THIS PROJECT (GROUND TO GRID) IS: 0.9998677337
THE N.C. LAMBERT GRID BEARING AND LOCALIZED HORIZONTAL GROUND DISTANCE FROM "BL-1" TO -L- STATION 10+00.00 IS
S 87° 49' 32.61" E 180.29'
ALL LINEAR DIMENSIONS ARE LOCALIZED HORIZONTAL DISTANCES
VERTICAL DATUM USED IS NAVD 88

NOTES:

1. *THE CONTROL DATA FOR THIS PROJECT CAN BE FOUND ELECTRONICALLY BY SELECTING PROJECT CONTROL DATA AT:*
HTTPS://CONNECT.NCDOT.GOV/RESOURCES/LOCATION/

THE FILES TO BE FOUND ARE AS FOLLOWS:
BD5109AD_LS_CONTROL.TXT

SITE CALIBRATION INFORMATION HAS NOT BEEN PROVIDED FOR THIS PROJECT. IF FURTHER INFORMATION IS NEEDED, PLEASE CONTACT THE LOCATION AND SURVEYS UNIT.

INDICATES GEODETIC CONTROL MONUMENTS USED OR SET FOR HORIZONTAL PROJECT CONTROL BY THE NCDOT LOCATION AND SURVEYS UNIT.
PROJECT CONTROL ESTABLISHED USING GLOBAL POSITIONING SYSTEM.

NOTE: DRAWING NOT TO SCALE

6/2/99

u24150 AM
BD5109AD_LS_1C-1.dgn
12/8/2014

PROJECT REFERENCE NO.	SHEET NO.
BD5109AD	1C-2
Location and Surveys	

SURVEY CONTROL SHEET BD5109AD
FINAL

L

TYPE	STATION	NORTH	EAST
POT	10+00.00	695177.6391	1510612.5307
PC	10+77.24	695182.1703	1510689.6363
PT	11+54.93	695186.2259	1510767.2205
PC	15+39.88	695203.8314	1511151.7647
PT	16+22.20	695206.9193	1511234.0305
POT	16+52.40	695207.8036	1511264.2160

ROW MARKER CONCRETE OR GRANITE-E

ALIGN	STATION	OFFSET	NORTH	EAST
L	12+10.00	-30.00	695218.7131	1510820.8616
L	12+10.00	-50.00	695238.6922	1510819.9469
L	13+60.00	-50.00	695245.5524	1510969.7899
L	13+60.00	-30.00	695225.5734	1510970.7046

DATUM DESCRIPTION

THE LOCALIZED COORDINATE SYSTEM DEVELOPED FOR THIS PROJECT IS BASED ON THE STATE PLANE COORDINATES ESTABLISHED BY NCGS FOR MONUMENT "BL-1"
WITH NAD 83/NSRS 2007 STATE PLANE GRID COORDINATES OF
NORTHING: 695184.479(ft) EASTING: 1510432.374(ft)
ELEVATION: 706.66(ft)
THE AVERAGE COMBINED GRID FACTOR USED ON THIS PROJECT (GROUND TO GRID) IS: 0.9998677337
THE N.C. LAMBERT GRID BEARING AND LOCALIZED HORIZONTAL GROUND DISTANCE FROM "BL-1" TO -L- STATION 10+00.00 IS
S 87° 49′ 32.61″ E 180.29′
ALL LINEAR DIMENSIONS ARE LOCALIZED HORIZONTAL DISTANCES
VERTICAL DATUM USED IS NAVD 88

NOTES:

1. *THE CONTROL DATA FOR THIS PROJECT CAN BE FOUND ELECTRONICALLY BY SELECTING PROJECT CONTROL DATA AT:*
   HTTPS://CONNECT.NCDOT.GOV/RESOURCES/LOCATION/

   THE FILES TO BE FOUND ARE AS FOLLOWS:
   BD5109AD_LS_CONTROL.TXT

   SITE CALIBRATION INFORMATION HAS NOT BEEN PROVIDED FOR THIS PROJECT. IF FURTHER INFORMATION IS NEEDED, PLEASE CONTACT THE LOCATION AND SURVEYS UNIT.

▲ *INDICATES GEODETIC CONTROL MONUMENTS USED OR SET FOR HORIZONTAL PROJECT CONTROL BY THE NCDOT LOCATION AND SURVEYS UNIT.*
PROJECT CONTROL ESTABLISHED USING GLOBAL POSITIONING SYSTEM.

NOTE: DRAWING NOT TO SCALE

PROJECT REFERENCE NO.	SHEET NO.
BD-5109AD	2

ROADWAY DESIGN ENGINEER
NORTH CAROLINA PROFESSIONAL SEAL 19563 ENGINEER TIMOTHY SCOTT HAYES
12/11/14

PLANS PREPARED BY:
PARSONS BRINCKERHOFF
434 FAYETTEVILLE STREET
SUITE 1500
RALEIGH, NC 27601

PAVEMENT SCHEDULE

C1	PROPOSED APPROX. 2 1/2" ASPHALT CONCRETE SURFACE COURSE,TYPE SF9.5A, AT AN AVERAGE RATE OF 168 LBS.PER SQ.YARD.IN EACH OF TWO LAYERS.
C2	PROPOSED VARIABLE DEPTH ASPHALT CONCRETE SURFACE COURSE,TYPE SF9.5A, AT AN AVERAGE RATE OF 112 LBS.PER SQ.YARD.PER 1" DEPTH,TO BE PLACED IN LAYERS NOT LESS THAN 1" OR GREATER THAN 1 1/2" IN DEPTH.
D1	PROPOSED APPROX. 2.5" ASPHALT CONCRETE INTERMEDIATE COURSE,TYPE I19.0B, AT AN AVERAGE RATE OF 285 LBS.PER SQ.YARD.
D2	PROPOSED VARIABLE DEPTH ASPHALT CONCRETE INTERMEDIATE COURSE,TYPE I19.0B, AT AN AVERAGE RATE OF 114 LBS.PER SQ.YARD. PER 1" DEPTH,TO BE PLACED IN LAYERS NOT LESS THAN 2 1/2" OR GREATER THAN 4" IN DEPTH.
E1	PROPOSED APPROXIMATE 4" ASPHALT CONCRETE BASE COURSE,TYPE B25.0B, AT AN AVERAGE RATE OF 456 LBS.PER SQ.YARD.
E2	PROPOSED VARIABLE DEPTH ASPHALT CONCRETE BASE COURSE,TYPE B25.0B, AT AN AVERAGE RATE OF 114 LBS.PER SQ.YARD,PER 1" DEPTH,TO BE PLACED IN LAYERS NOT LESS THAN 3" OR GREATER THAN 5 1/2" IN DEPTH.
T	EARTH MATERIAL
U	EXISTING PAVEMENT
W	WEDGING DETAIL

NOTE: ALL PAVEMENT EDGE SLOPES ARE 1:1 UNLESS OTHERWISE SHOWN.

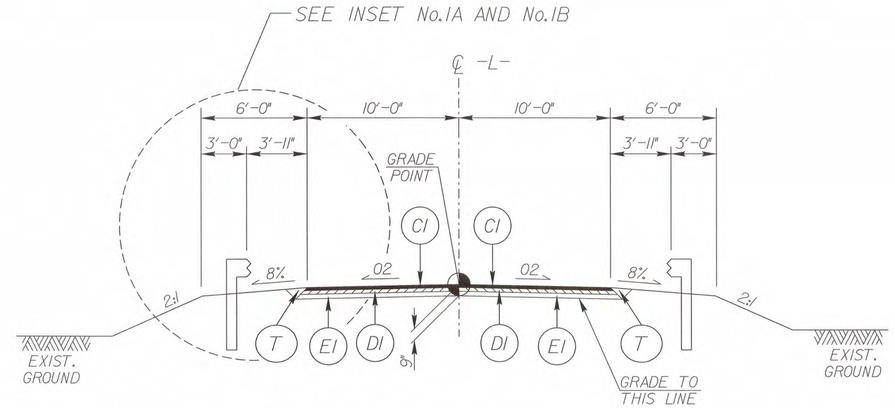

TYPICAL SECTION No. 1

USE TYPICAL SECTION No.1 AS FOLLOWS:

TRANSITION FROM EXISTING TO TYPICAL SECTION NO.1 FROM -L- STA.12+10.00 TO -L- STA.12+60.00
FROM -L- STA.12+60.00 TO -L- STA.12+89.70 (BEGIN BRIDGE)
FROM -L- STA.13+92.30 (END BRIDGE) TO -L- STA.14+20.00
TRANSITION FROM TYPICAL SECTION NO.1 TO EXISTING FROM -L- STA.14+20.00 TO -L- STA.14+70.00

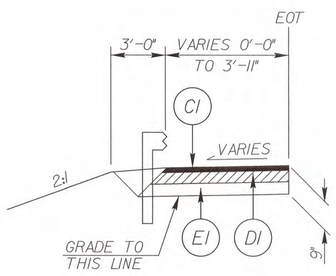

INSET No.1A

(SEE PLANS FOR PAVED SHOULDER LOCATION)

USE INSET No.1A IN CONJUCTION w/TYPICAL SECTION No.1 AS FOLLOWS:

FROM -L- STA.12+10.50 TO 12+61.49 LT
FROM -L- STA.12+21.72 TO 12+61.43 RT
FROM -L- STA.14+11.8 TO 14+42.51 LT
FROM -L- STA.13+95.11 TO 14+42.51 RT

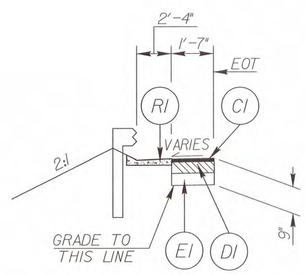

INSET No.1B

USE INSET No. 1B IN CONJUNCTION w/TYPICAL SECTION No. 1 AS FOLLOWS:

FROM -L- STA.12+61.49 TO 12+84.63 LT
FROM -L- STA.12+61.43 TO 12+73.08 RT

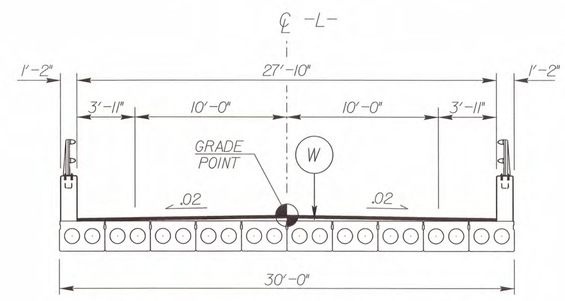

TYPICAL SECTION No. 2

USE TYPICAL SECTION No.3 AS FOLLOWS:

FROM -L- STA.12+89.70 (BEGIN BRIDGE) TO -L- STA.13+92.30 (END BRIDGE)

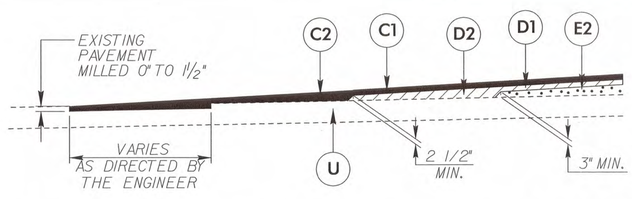

MILLING DETAIL FOR PROFILE CONNECTIONS

TYING PROPOSED PAVEMENTS TO EXISTING PAVEMENTS

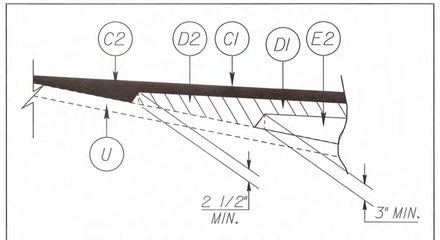

WEDGING DETAIL (W)

6/2/99

8:55:49 AM
12/11/2014
BD-5109AD_Rdy_typ.dgn

STATE OF NORTH CAROLINA
DEPT. OF TRANSPORTATION
DIVISION OF HIGHWAYS
RALEIGH, N.C.

ENGLISH DETAIL DRAWING FOR
STRUCTURE ANCHOR UNITS
GUARDRAIL ANCHOR UNIT, TYPE III FOR ATTACHMENT TO
RAIL ON BRIDGE - SUB REGIONAL TIER

SHEET 2 OF 7
862d03

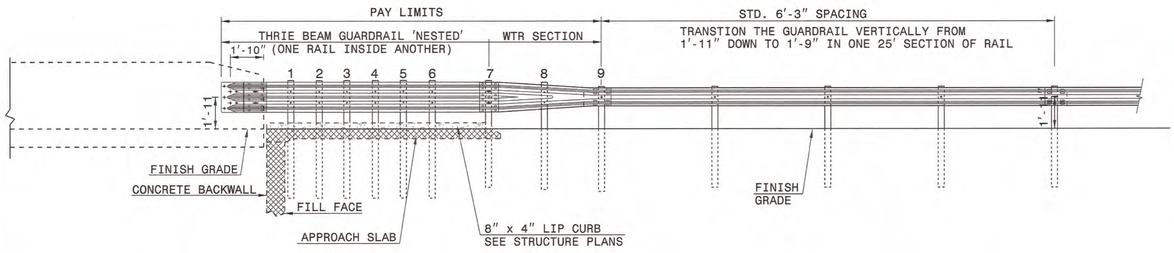

ELEVATION

NOTE:
- **POST NOT REQUIRED FOR SKEW ANGLES GREATER THAN 150° OR LESS THAN 30° UNLESS OTHERWISE DIRECTED BY THE ENGINEER.
- *THE DISTANCE FROM END OF BRIDGE RAIL TO CENTER LINE OF THE FIRST POST SHOULD BE 11½" IF CONCRETE BACKWALL IS NOT PRESENT.
- -SHOULDER BERM GUTTER MUST BE INSTALLED TO THE LIMITS 8" x 4" LIP CURB IS SHOWN IF ANCHOR UNIT IS NOT ADJACENT TO AN APPROACH SLAB.
- -MEASURE GUARDRAIL HEIGHT FROM THE TOP OF ADJACENT SURFACE (SHOULDER, BERM, OR GUTTER).
- -LAP JOINTS IN THE DIRECTION OF TRAFFIC FLOW.
- -SEE SHEET 5 FOR POST SECTIONS 1 THRU 9.

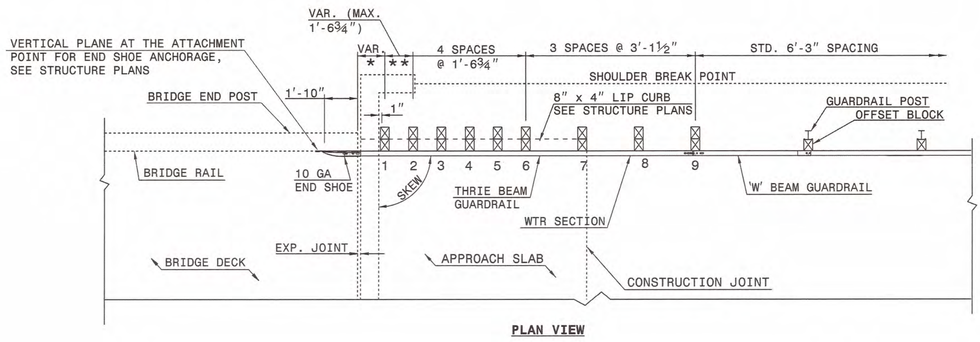

PLAN VIEW

GUARDRAIL ANCHOR UNIT, TYPE III FOR ATTACHMENT TO RAIL ON BRIDGE - SUB REGIONAL TIER

STATE OF NORTH CAROLINA
DEPT. OF TRANSPORTATION
DIVISION OF HIGHWAYS
RALEIGH, N.C.

ENGLISH DETAIL DRAWING FOR
STRUCTURE ANCHOR UNITS
GUARDRAIL ANCHOR UNIT, TYPE III FOR ATTACHMENT TO
RAIL ON BRIDGE - SUB REGIONAL TIER

SHEET 2 OF 7
862d03

STATE OF NORTH CAROLINA
DEPT. OF TRANSPORTATION
DIVISION OF HIGHWAYS
RALEIGH, N.C.

ENGLISH DETAIL DRAWING FOR
STRUCTURE ANCHOR UNITS
GUARDRAIL ANCHOR UNIT, TYPE III

SHEET 3 OF 7
862d03

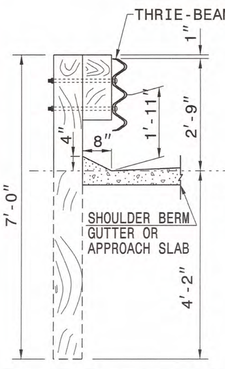

SECTION OF THRIE BEAM POSTS 1 THRU 6

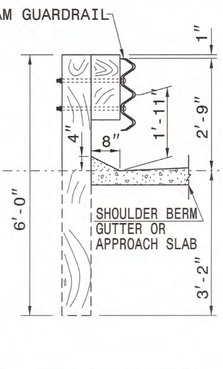

SECTION OF THRIE BEAM POST 7

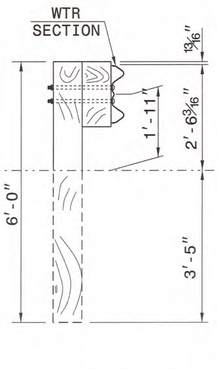

SECTION OF WTR BEAM POST 8

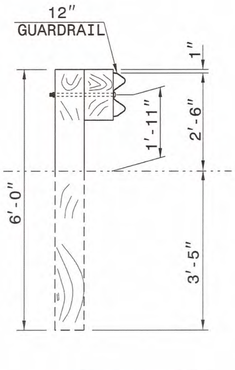

SECTION OF 'W' BEAM POST 9

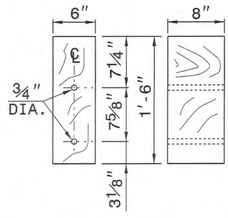

THRIE BEAM OFFSET BLOCK

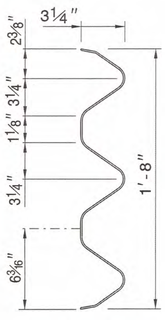

THRIE-BEAM SECTION

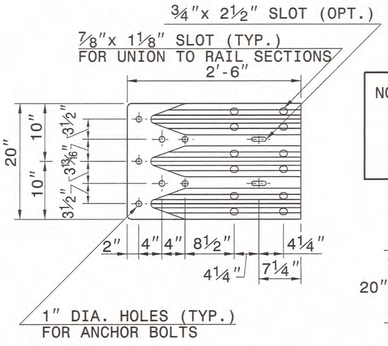

END SHOE

NOTE: THE MID POST AND OFFSET BLOCK OF THE WTR SECTION WILL REQUIRE SPECIAL BOLT HOLE DRILLING IN THE THRIE BEAM OFFSET BLOCK AND LINE POST.

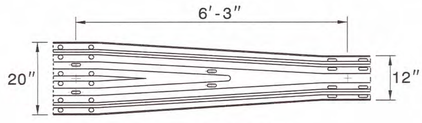

WTR SECTION
ELEVATION VIEW

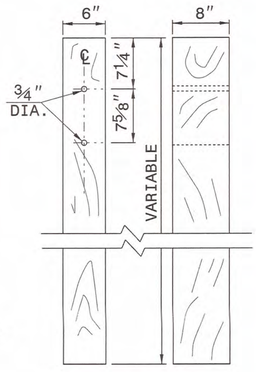

THRIE BEAM LINE POST

STATE OF NORTH CAROLINA
DEPT. OF TRANSPORTATION
DIVISION OF HIGHWAYS
RALEIGH, N.C.

ENGLISH DETAIL DRAWING FOR
STRUCTURE ANCHOR UNITS
GUARDRAIL ANCHOR UNIT, TYPE III

SHEET 3 OF 7
862d03

12/06/07

PROJECT REFERENCE NO.	SHEET NO.
BD-5109AD	3

STATE OF NORTH CAROLINA
DIVISION OF HIGHWAYS

LIST OF PIPES, ENDWALLS, ETC. (FOR PIPES 48" & UNDER)

STATION	LOCATION (LT,RT, OR CL)	STRUCTURE NO. FROM	STRUCTURE NO. TO	TOP ELEVATION	INVERT ELEVATION	INVERT ELEVATION	SLOPE CRITICAL
12+65	RT	0401		697.53			
		0401	0402		693.28	693.17	
12+65	LT	0402		697.53			
		0402	0403		693.17	693.00	

STATION	DRAINAGE PIPE (RCP, CSP, CAAP, HDPE, or PVC) 12"	15"	18"	24"	30"	36"	42"	48"	C.S. PIPE (UNLESS NOTED OTHRWISE) 12" .064	15" .064	18" .064	24" .064	24"	30" .079	30"	36" .079	36"	42" .109	42"	48" .109	48"
12+65																					
		24																			
12+65																					
		24																			

STATION	CLASS III R.C. PIPE (UNLESS OTHERWISE NOTED) 12"	15"	18"	24"	30"	36"	42"	48"	15" SIDE DRAIN PIPE	18" SIDE DRAIN PIPE	24" SIDE DRAIN PIPE	ENDWALLS STD. 838.01, STD. 838.11 OR STD. 838.80 (UNLESS NOTED OTHERWISE) CU. YDS. R.C.P.	C.S.P.	QUANTITIES FOR DRAINAGE STRUCTURES PER EACH (0' THRU 5.0')	* TOTAL L.F. FOR PAY QUANTITY SHALL BE COL. 'A' + (1.3 X COL.'B') LIN. *FT. A 5.0' THRU 10.0'	B 10.0' AND ABOVE	C.B. STD. 840.01 OR STD. 840.02	FRAME, GRATES AND HOOD STANDARD 840.03 TYPE OF GRATE E	F	G	
12+65														1							
12+65														1							
		24																			
		24												2							

STATION	D.I. STD. 840.14 OR STD. 840.15	D.I. FRAME & GRATE STD. 840.16	G.D.I. TYPE "A" STD. 840.17 OR 840.26	G.D.I. TYPE "B" STD. 840.18 OR 840.27	G.D.I. TYPE "D" STD. 840.19 OR 840.28	G.D.I. FRAME WITH GRATE STD. 840.22	G.D.I. FRAME WITH TWO GRATES STD. 840.22	G.D.I. (N.S.) FRAME WITH GRATE STD. 840.29	G.D.I. (N.S.) FRAME WITH TWO GRATES STD. 840.29	J.B. STD. 840.31 OR 840.32	T.B.G.D.I. STD. 840.35							CORR. STEEL ELBOWS NO. & SIZE	CONC. COLLARS CL. "B" C.Y. STD 840.72	CONC. & BRICK PIPE PLUG, C.Y. STD. 840.71	PIPE REMOVAL LIN.FT.	REMARKS
12+65									1		1											
12+65									1		1											
									2		2											

ABBREVIATIONS

C.B. CATCH BASIN
N.D.I. NARROW DROP INLET
D.I. DROP INLET
G.D.I. GRATED DROP INLET
G.D.I. (N.S.) GRATED DROP INLET (NARROW SLOT)
J.B. JUNCTION BOX
M.H. MANHOLE
T.B.D.I. TRAFFIC BEARING DROP INLET
T.B.J.B. TRAFFIC BEARING JUNCTION BOX

"N" = DISTANCE FROM EDGE OF LANE TO FACE OF GUARDRAIL.
TOTAL SHOULDER WIDTH = DISTANCE FROM EDGE OF TRAVEL LANE TO SHOULDER BREAK POINT.
FLARE LENGTH = DISTANCE FROM LAST SECTION OF PARALLEL GUARDRAIL TO END OF GUARDRAIL.
W = TOTAL WIDTH OF FLARE FROM BEGINNING OF TAPER TO END OF GUARDRAIL.
G = GATING IMPACT ATTENUATOR TYPE 350
NG = NON-GATING IMPACT ATTENUATOR TYPE 350

GUARDRAIL SUMMARY

SURVEY LINE	BEG. STA.	END STA.	LOCATION	LENGTH STRAIGHT	SHOP CURVED	DOUBLE FACED	WARRANT POINT APPROACH END	TRAILING END	"N" DIST. FROM E.O.L.	TOTAL SHOUL. WIDTH	FLARE LENGTH APPROACH END	TRAILING END	W APPROACH END	TRAILING END	ANCHORS XI MOD	XI	GRAU 350	M-350	III	CAT-1	VI MOD	BIC	AT-1	IMPACT ATTENUATOR TYPE 350 EA	G	NG	SINGLE FACED GUARDRAIL	REMOVE EXISTING GUARDRAIL	REMOVE AND STOCKPILE EXISTING GUARDRAIL	REMARKS
-L-	12+24.86	12+98.86	LT.	75'				12+99.86	3'-11"	6'-11"		50'		1'			1		1											
-L-	12+08.79	12+83.79	RT.	75'			12+83.79		3'-11"	6'-11"	50'		1'				1		1											
-L-	13+98.22	14+73.22	LT.	75'			13+82.15		3'-11"	6'-11"	50'			1'			1		1											
-L-	13+82.15	14+57.15	RT.	75'				13+98.22	3'-11"	6'-11"		50'	1'				1		1											
	LESS ANCHOR DEDUCTIONS																													
	TYPE 350	4 @ 50.00'	=	200'																										
	TYPE III	4 @ 18.75'	=	75'																										
		TOTAL		25'													4		4											

SUMMARY OF EARTHWORK

STATION	STATION	UNCL. EXCAV.	EMBANK. +%	BORROW	WASTE
11+80.00	12+89.70	41	38	0	3
13+92.30	14+85.00	12	83	71	0
SUBTOTALS:		53	121	71	3
WASTE TO REPLACE BORROW				-3	-3
PROJECT TOTALS:		53	121	68	0
SAY:		60		70	

NOTE:
1) APPROXIMATE QUANTITIES ONLY. UNCLASSIFIED EXCAVATION, BORROW EXCAVATION, SHOULDER BORROW, FINE GRADING, CLEARING AND GRUBBING, BREAKING OF EXISTING PAVEMENT, AND REMOVAL OF EXISTING PAVEMENT WILL BE PAID FOR AT THE CONTRACT LUMP SUM PRICE FOR "GRADING."
2) EARTHWORK QUANTITIES EXCLUDE VOLUMES FOR "UNCLASSIFIED BRIDGE EXCAVATION".

SHOULDER BERM GUTTER SUMMARY

SURVEY LINE	STATION	STATION	LENGTH
-L-	12+61.49	12+85.54	24.05'
-L-	12+61.43	12+72.17	10.74'
		TOTAL:	34.79'
		SAY:	35'

PAVEMENT REMOVAL SUMMARY

SURVEY LINE	STATION	STATION	LOCATION LT/RT/CL	YD^2
-L-	12+60.00	13+01.86	CL	72
-L-	13+80.56	14+20.00	CL	70
			TOTAL:	142
			SAY:	145

$$$$$$SYSTIME$$$$
$$$$$$$$$$$$$$$$$DGN$$$$$$$$$$$$$$
$$$$$$USERNAME$$$$$

ROWAN COUNTY
LOW IMPACT BRIDGE

STRUCTURE 790014
LS 09-12-064
WBS 45555.1.30
TIP BD-5109AD

PROJECT REFERENCE NO.	SHEET NO.
BD-5109AD	4
R/W SHEET NO.	
ROADWAY DESIGN ENGINEER	HYDRAULICS ENGINEER

NORTH CAROLINA PROFESSIONAL SEAL 19563 ENGINEER TIMOTHY SCOTT HAYES 12/17/14

NORTH CAROLINA PROFESSIONAL SEAL 032312 ENGINEER CHARLES W. HEFNER 12/16/14

PLANS PREPARED BY:
PARSONS BRINCKERHOFF
434 FAYETTEVILLE STREET
SUITE 1500
RALEIGH, NC 27601
LICENSE NO. F-0165

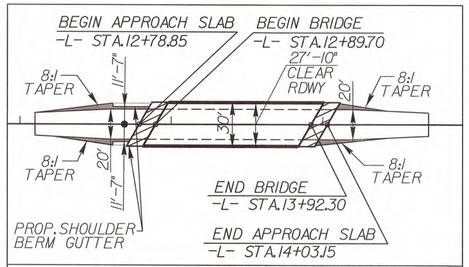

SKETCH SHOWING DIMENSION OF PAVEMENT AND SHOULDERS IN RELATION TO PROPOSED BRIDGE WIDTH

PAVED SHLD.

DETAIL A
DECK DRAIN DISSIPATOR PAD
(Not to Scale)

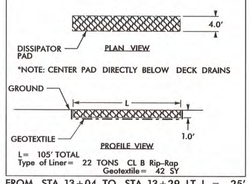

L= 105' TOTAL
Type of Liner= 22 TONS CL B Rip-Rap
Geotextile= 42 SY

FROM STA. 13+04 TO STA. 13+29 LT, L = 25'
STA. 13+69 TO STA. 13+94 LT, L = 25'
FROM STA. 12+83 TO STA. 13+08 RT, L = 25'
STA. 13+53 TO STA. 13+83 RT, L = 30'

CURVE DATA
PI Sta 11+16.08
Δ = 0° 44' 30.8" (RT)
D = 0° 57' 17.7"
L = 77.69'
T = 38.85'
R = 6,000.00'

CURVE DATA
PI Sta 15+81.04
Δ = 0° 56' 36.1" (RT)
D = 1° 08' 45.3"
L = 82.32'
T = 41.16'
R = 5,000.00'

NC GRID
NAD 83/NSRS 2007

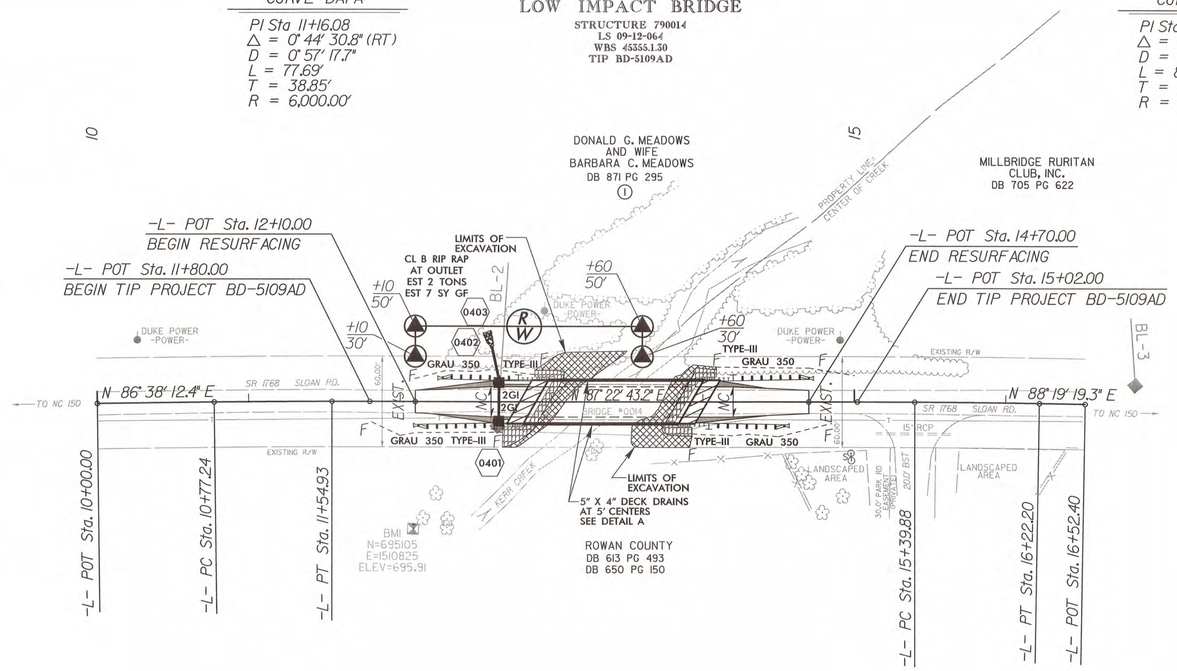

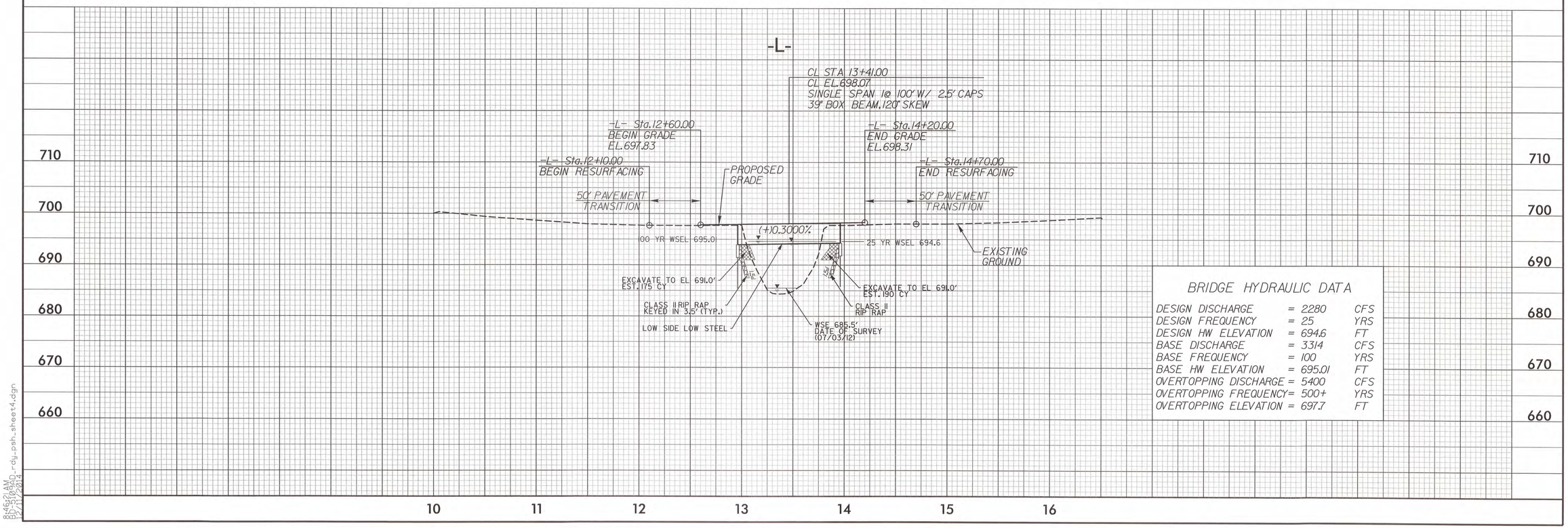

BRIDGE HYDRAULIC DATA

DESIGN DISCHARGE	= 2280	CFS
DESIGN FREQUENCY	= 25	YRS
DESIGN HW ELEVATION	= 694.6	FT
BASE DISCHARGE	= 3314	CFS
BASE FREQUENCY	= 100	YRS
BASE HW ELEVATION	= 695.01	FT
OVERTOPPING DISCHARGE	= 5400	CFS
OVERTOPPING FREQUENCY	= 500+	YRS
OVERTOPPING ELEVATION	= 697.7	FT

8/17/99

8:46:20 AM
BD-5109AD_rdy_psh_sheet4.dgn
12/11/2014

STATE PROJECT REFERENCE NO.	SHEET NO.
BD-5109AD	TCP-1

STATE OF NORTH CAROLINA
DIVISION OF HIGHWAYS

PLAN FOR PROPOSED TRAFFIC CONTROL, MARKING & DELINEATION

DAVIE COUNTY

ROADWAY STANDARD DRAWINGS

THE FOLLOWING ROADWAY STANDARDS AS APPEAR IN "ROADWAY STANDARD DRAWINGS" - PROJECT SERVICES UNIT - N.C. DEPARTMENT OF TRANSPORTATION - RALEIGH, N.C., DATED JULY 2012 ARE APPLICABLE TO THIS PROJECT AND BY REFERENCE HEREBY ARE CONSIDERED A PART OF THESE PLANS:

STD. NO.	TITLE
1101.03	TEMPORARY ROAD CLOSURES
1101.11	TRAFFIC CONTROL DESIGN TABLES
1110.01	STATIONARY WORK ZONE SIGNS
1145.01	BARRICADES
1205.01	PAVEMENT MARKINGS - LINE TYPES & OFFSETS
1205.02	PAVEMENT MARKINGS - 2 LANE & MULTILANE ROADWAYS
1261.01	GUARDRAIL & BARRIER DELINEATOR SPACING
1261.02	GUARDRAIL & BARRIER DELINEATOR TYPE
1262.01	GUARDRAIL END DELINEATION

INDEX OF SHEETS

SHEET NO.	TITLE
TCP-1	LIST OF APPLICABLE ROADWAY STANDARD DRAWINGS, LEGEND AND INDEX OF SHEETS
TCP-2	GENERAL NOTES, PHASING AND DETOUR SIGNING

LEGEND

GENERAL

- DIRECTION OF TRAFFIC FLOW
- NORTH ARROW
- PROPOSED PVMT. --------- EXIST. PVMT.
- WORK AREA
- MILL AND WEDGE
- REMOVAL OF EXISTING PAVEMENT

TRAFFIC CONTROL DEVICES

- TYPE I BARRICADE
- TYPE II BARRICADE
- TYPE III BARRICADE
- CONE
- DRUM
- SKINNY DRUM
- FLASHING ARROW PANEL (TYPE C)
- STATIONARY SIGN
- PORTABLE SIGN
- STATIONARY OR PORTABLE SIGN
- CRASH CUSHION
- CHANGEABLE MESSAGE SIGN
- TRUCK MOUNTED IMPACT ATTENUATOR (TMIA)
- POLICE
- FLAGGER

PAVEMENT MARKINGS

- CRYSTAL/CRYSTAL PAVEMENT MARKER
- YELLOW/YELLOW PAVEMENT MARKER
- CRYSTAL/RED PAVEMENT MARKER
- PAVEMENT MARKING SYMBOLS

APPROVED: [signature]
DATE: 12/10/14

PARSONS BRINCKERHOFF
434 FAYETTEVILLE STREET
SUITE 1500
RALEIGH, NC 27601
LICENSE NO. F-0165

SEAL

NORTH CAROLINA PROFESSIONAL SEAL 19563 ENGINEER TIMOTHY SCOTT HAYES

TIM HAYES, PE — PROJECT ENGINEER
LAUREN WILSON, EI — PROJECT DESIGN

BD-5109AD

TIP PROJECT:

10:21:40 AM
BD-5109AD_TC_TCP_TSH.dgn
11/17/2014

PROJ. REFERENCE NO.	SHEET NO.
BD-5109AD	TCP-2

PARSONS BRINCKERHOFF
434 FAYETTEVILLE STREET
SUITE 1500
RALEIGH, NC 27601
LICENSE NO. F-0165

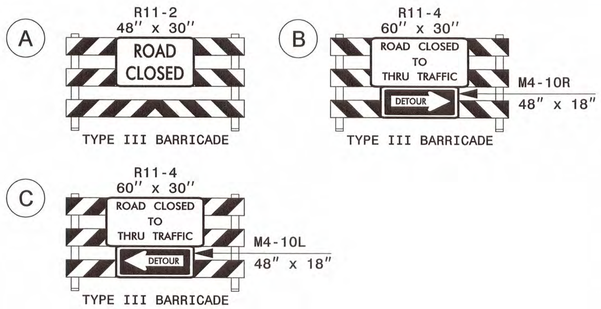

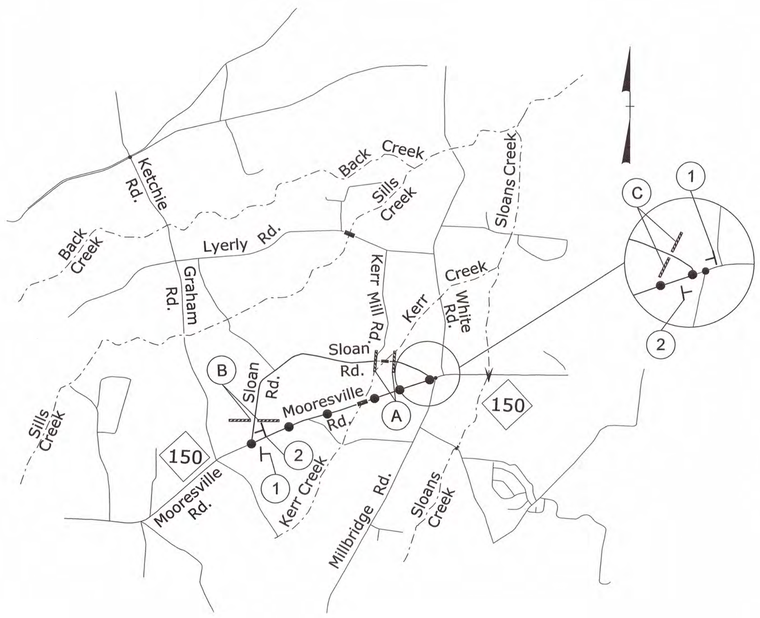

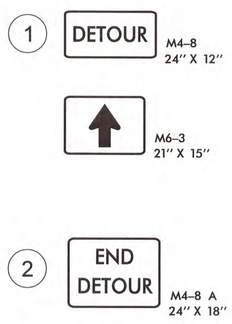

GENERAL NOTES

CHANGES MAY BE REQUIRED WHEN PHYSICAL DIMENSIONS IN THE DETAIL DRAWINGS, STANDARD DETAILS, AND ROADWAY DETAILS ARE NOT ATTAINABLE TO MEET FIELD CONDITIONS OR RESULT IN DUPLICATE OR UNDESIRED OVERLAPPING OF DEVICES. MODIFICATION MAY INCLUDE: MOVING, SUPPLEMENTING, COVERING, OR REMOVAL OF DEVICES AS DIRECTED BY THE ENGINEER.

THE FOLLOWING GENERAL NOTES APPLY AT ALL TIMES FOR THE DURATION OF THE CONSTRUCTION PROJECT EXCEPT WHEN OTHERWISE NOTED IN THE PLAN OR DIRECTED BY THE ENGINEER.

LANE AND SHOULDER CLOSURE REQUIREMENTS

A) REMOVE LANE CLOSURE DEVICES FROM THE LANE WHEN WORK IS NOT BEING PERFORMED BEHIND THE LANE CLOSURE OR WHEN A LANE CLOSURE IS NO LONGER NEEDED OR AS DIRECTED BY THE ENGINEER.

B) WHEN PERSONNEL AND/OR EQUIPMENT ARE WORKING WITHIN 15 FT OF AN OPEN TRAVEL LANE, CLOSE THE NEAREST OPEN SHOULDER USING ROADWAY STANDARD DRAWING NO. 1101.04 UNLESS THE WORK AREA IS PROTECTED BY BARRIER OR GUARDRAIL OR A LANE CLOSURE IS INSTALLED.

TRAFFIC PATTERN ALTERATIONS

C) NOTIFY THE ENGINEER TWENTY ONE (21) CALENDAR DAYS PRIOR TO ANY TRAFFIC PATTERN ALTERATION.

SIGNING

D) INSTALL ADVANCE WORK ZONE WARNING SIGNS WHEN WORK IS WITHIN 40 FT FROM THE EDGE OF TRAVEL LANE AND NO MORE THAN THREE (3) DAYS PRIOR TO THE BEGINNING OF CONSTRUCTION.

E) PROVIDE SIGNING AND DEVICES REQUIRED TO CLOSE THE ROAD ACCORDING TO THE ROADWAY STANDARD DRAWINGS AND TRAFFIC CONTROL PLANS.

PROVIDE SIGNING REQUIRED FOR THE OFF-SITE DETOUR ROUTE AS SHOWN ON THIS SHEET.

F) COVER OR REMOVE ALL SIGNS AND DEVICES REQUIRED TO CLOSE THE ROAD WHEN ROAD CLOSURE IS NOT IN OPERATION.

COVER OR REMOVE ALL SIGNS REQUIRED FOR THE OFF-SITE DETOUR WHEN THE DETOUR IS NOT IN OPERATION.

G) ENSURE ALL NECESSARY SIGNING IS IN PLACE PRIOR TO ALTERING ANY TRAFFIC PATTERN.

TRAFFIC CONTROL DEVICES

H) PLACE TYPE III BARRICADES, WITH "ROAD CLOSED" SIGN R11-2 ATTACHED, OF SUFFICIENT LENGTH TO CLOSE ENTIRE ROADWAY.

PAVEMENT MARKINGS AND MARKERS

I) INSTALL PAVEMENT MARKINGS ON THE FINAL SURFACE AS FOLLOWS:

ROAD NAME	MARKING
SR 1768 (SLOAN ROAD)	PAINT

J) TIE PROPOSED PAVEMENT MARKING LINES TO EXISTING PAVEMENT MARKING LINES.

K) REMOVE/REPLACE ANY CONFLICTING/DAMAGED PAVEMENT MARKINGS.

L) PASSING ZONE WILL BE DETERMINED IN THE FIELD AND MUST BE APPROVED BY THE ENGINEER.

PHASING

PHASE I

PRIOR TO ANY CONSTRUCTION OPERATIONS, PLACE AND COVER OFF-SITE DETOUR SIGNING AS SHOWN ON TCP-2 AND IN ACCORDANCE WITH RSD 1101.03 (SHEET 1 OF 9). OPTIONAL SIGN USE MUST BE APPROVED BY THE ENGINEER PRIOR TO PLACEMENT.

PHASE II

USING OFF-SITE DETOUR, UNCOVER DETOUR SIGNS, CLOSE -L- (SR 1768 / SLOAN ROAD) TO TRAFFIC, AND EXCAVATE AND CONSTRUCT NEW BRIDGE AND ROADWAY UP TO AND INCLUDING FINAL LAYER OF SURFACE COURSE.

PHASE III

UPON COMPLETION OF BRIDGE AND ROADWAY, PLACE FINAL PAVEMENT MARKING IN ACCORDANCE WITH RSD 1205.01. REMOVE BARRICADES AND DETOUR SIGNS AND OPEN -L- (SR 1768 / SLOAN ROAD) TO TRAFFIC.

PROPOSED DETOUR

DETOUR ROUTE

DETOUR LENGTH 2.5 MILES

APPROVED: DATE: 12/10/14

SEAL

NORTH CAROLINA PROFESSIONAL SEAL 19563 ENGINEER TIMOTHY SCOTT HAYES

GENERAL NOTES, PHASING AND DETOUR SIGNING

SCALE:	NONE
DATE:	02/19/13
DWG. BY:	RGK
DESIGN BY:	LJW
REVIEWED BY:	EDM

REVISIONS

CADD FILE

10:21:03 AM
BD-5109AD_TC_TCP_Sheet2.dgn
11/17/2014

PROJECT: BD-5109AD

STATE	STATE PROJECT REFERENCE NO.	SHEET NO.	TOTAL SHEETS
N.C.	BD-5109AD	EC-1	

STATE PROJ. NO.	F. A. PROJ. NO.	DESCRIPTION
45355.1.30	BRZ-1768(2)	PE
45355.2.FD30	BRZ-1768(2)	R/W, UTILITIES
45355.3.FD30	BRZ-1768(2)	CONSTR.

EROSION AND SEDIMENT CONTROL MEASURES

Std. #	Description
1630.03	Temporary Silt Ditch
1630.05	Temporary Diversion
1605.01	Temporary Silt Fence
1606.01	Special Sediment Control Fence
1622.01	Temporary Berms and Slope Drains
1630.02	Silt Basin Type B
1633.01	Temporary Rock Silt Check Type-A
	Temporary Rock Silt Check Type-A with Matting and Polyacrylamide (PAM)
1633.02	Temporary Rock Silt Check Type-B
	Wattle/ Coir Fiber Wattle
	Wattle/ Coir Fiber Wattle with Polyacrylamide (PAM)
1634.01	Temporary Rock Sediment Dam Type-A
1634.02	Temporary Rock Sediment Dam Type-B
1635.01	Rock Pipe Inlet Sediment Trap Type-A
1635.02	Rock Pipe Inlet Sediment Trap Type-B
1630.04	Stilling Basin
1630.06	Special Stilling Basin
	Rock Inlet Sediment Trap:
1632.01	Type A
1632.02	Type B
1632.03	Type C
	Skimmer Basin
	Tiered Skimmer Basin
	Infiltration Basin

STATE OF NORTH CAROLINA
DIVISION OF HIGHWAYS

PLAN FOR PROPOSED
HIGHWAY EROSION CONTROL

ROWAN COUNTY

LOCATION: REPLACE EXISTING BRIDGE NO. 14 OVER KERR CREEK WITH CORED SLAB BRIDGE

TYPE OF WORK: GRADING, DRAINAGE, STRUCTURE, AND PAVEMENT MARKINGS

NC GRID
NAD 83/NSRS 2007

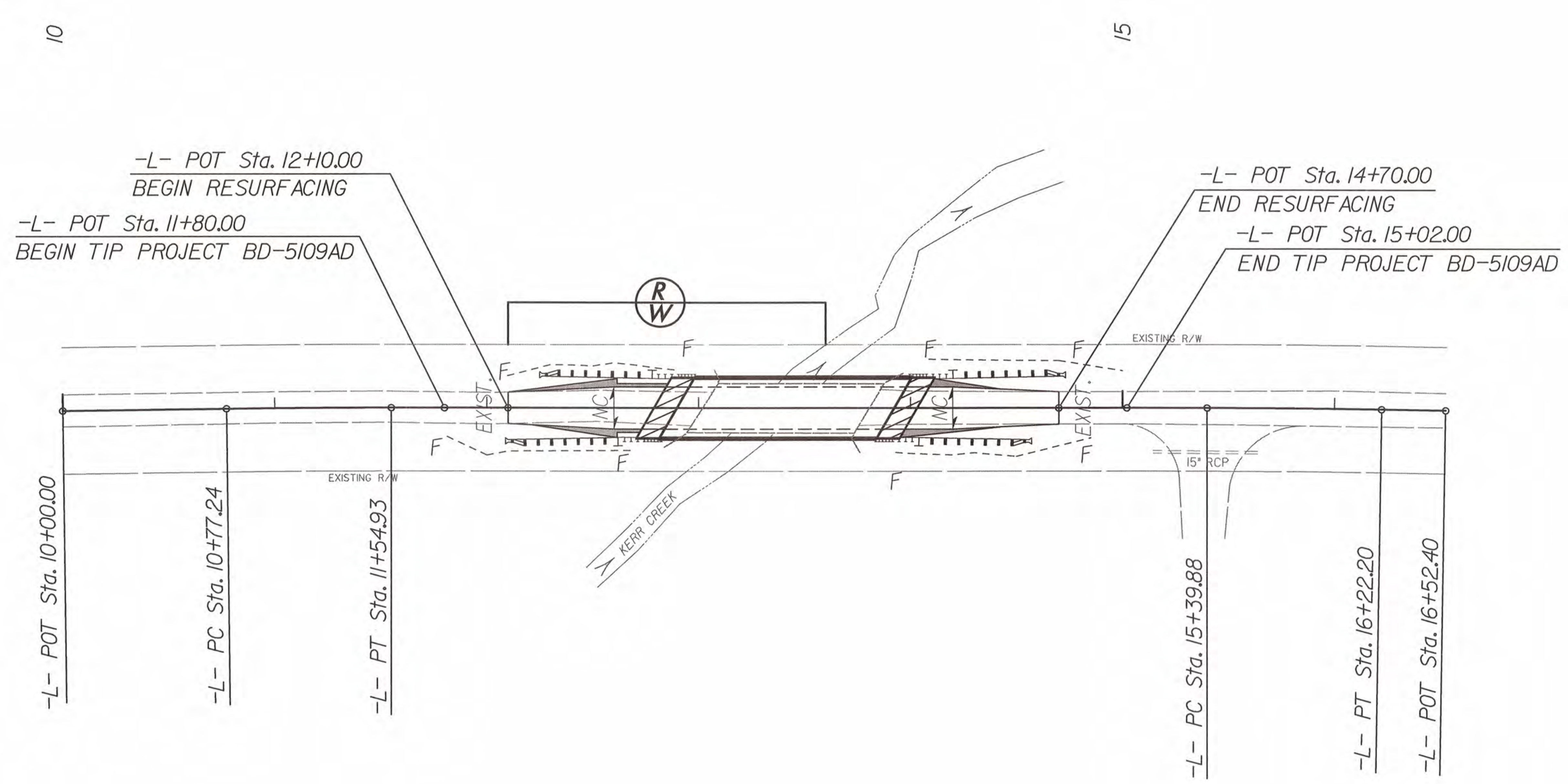

HIGH QUALITY WATER(S) EXIST ON THIS PROJECT

High Quality Water Zone(s) Exist
From Sta. 12+91.00
to Sta. 13+91.00
Refer To E. C. Special Provisions for Special Considerations.

THIS PROJECT HAS BEEN DESIGNED TO SENSITIVE WATERSHED STANDARDS.

ENVIRONMENTALLY SENSITIVE AREA(S) EXIST ON THIS PROJECT

Refer To E. C. Special Provisions for Special Considerations.

CHARLES HEAFNER
LEVEL III NAME

3340
LEVEL III CERTIFICATION NO.

ROADSIDE ENVIRONMENTAL UNIT
DIVISION OF HIGHWAYS
STATE OF NORTH CAROLINA

GRAPHIC SCALE

30 15 0 30 60
PLANS

THESE EROSION AND SEDIMENT CONTROL PLANS COMPLY WITH THE REGULATIONS SET FORTH BY THE NCG-010000 GENERAL CONSTRUCTION PERMIT EFFECTIVE AUGUST 3, 2011 ISSUED BY THE NORTH CAROLINA DEPARTMENT OF ENVIRONMENT AND NATURAL RESOURCES DIVISION OF WATER QUALITY.

PLANS PREPARED BY:
PARSONS BRINCKERHOFF
434 FAYETTEVILLE STREET
SUITE 1500
RALEIGH, NC 27601
LICENSE NO. F-0165

2012 STANDARD SPECIFICATIONS

PLANS PREPARED FOR:
DIVISION OF HIGHWAYS
1000 Birch Ridge Dr.
Raleigh NC, 27610

RIGHT OF WAY DATE:

TIM HAYES, PE
PROJECT ENGINEER

LETTING DATE:

LAUREN WILSON, EI
PROJECT DESIGN ENGINEER

NCDOT CONTACT:

MATTHEW JONES, PE
DIVISION BRIDGE - PROGRAM MANAGER

Roadway Standard Drawings

The following roadway english standards as appear in "Roadway Standard Drawings"- Roadway Design Unit - N. C. Department of Transportation - Raleigh, N. C., dated January 2012 and the latest revison thereto are applicable to this project and by reference hereby are considered a part of these plans.

1604.01	Railroad Erosion Control Detail
1605.01	Temporary Silt Fence
1606.01	Special Sediment Control Fence
1607.01	Gravel Construction Entrance
1622.01	Temporary Berms and Slope Drains
1630.01	Riser Basin
1630.02	Silt Basin Type B
1630.03	Temporary Silt Ditch
1630.04	Stilling Basin
1630.05	Temporary Diversion
1630.06	Special Stilling Basin
1631.01	Matting Installation
1632.01	Rock Inlet Sediment Trap Type A
1632.02	Rock Inlet Sediment Trap Type B
1632.03	Rock Inlet Sediment Trap Type C
1633.01	Temporary Rock Silt Check Type A
1633.02	Temporary Rock Silt Check Type B
1634.01	Temporary Rock Sediment Dam Type A
1634.02	Temporary Rock Sediment Dam Type B
1635.01	Rock Pipe Inlet Sediment Trap Type A
1635.02	Rock Pipe Inlet Sediment Trap Type B
1640.01	Coir Fiber Baffle
1645.01	Temporary Stream Crossing

$$$$SYSTIME$$$$
$$$$$$$$DGN$$$$$$$$$$$$$$$$$$$$
$$$$USERNAME$$$$

PROJECT REFERENCE NO.	SHEET NO.
BD-5109AD	EC-2

PARSONS BRINCKERHOFF
434 FAYETTEVILLE STREET
SUITE 1500
RALEIGH, NC 27601
LICENSE NO. F-0165

DIVISION OF HIGHWAYS
STATE OF NORTH CAROLINA

SOIL STABILIZATION TIMEFRAMES

SITE DESCRIPTION	STABILIZATION TIME	TIMEFRAME EXCEPTIONS
PERIMETER DIKES, SWALES, DITCHES AND SLOPES	7 DAYS	NONE
HIGH QUALITY WATER (HQW) ZONES	7 DAYS	NONE
SLOPES STEEPER THAN 3:1	7 DAYS	IF SLOPES ARE 10' OR LESS IN LENGTH AND ARE NOT STEEPER THAN 2:1, 14 DAYS ARE ALLOWED.
SLOPES 3:1 OR FLATTER	14 DAYS	7 DAYS FOR SLOPES GREATER THAN 50' IN LENGTH.
ALL OTHER AREAS WITH SLOPES FLATTER THAN 4:1	14 DAYS	NONE, EXCEPT FOR PERIMETERS AND HQW ZONES.

PROJECT REFERENCE NO.	SHEET NO.
BD-5109AD	EC-3

PLANS PREPARED BY:
PARSONS BRINCKERHOFF
434 FAYETTEVILLE STREET
SUITE 1500
RALEIGH, NC 27601
LICENSE NO. F-0165

EROSION CONTROL PLAN

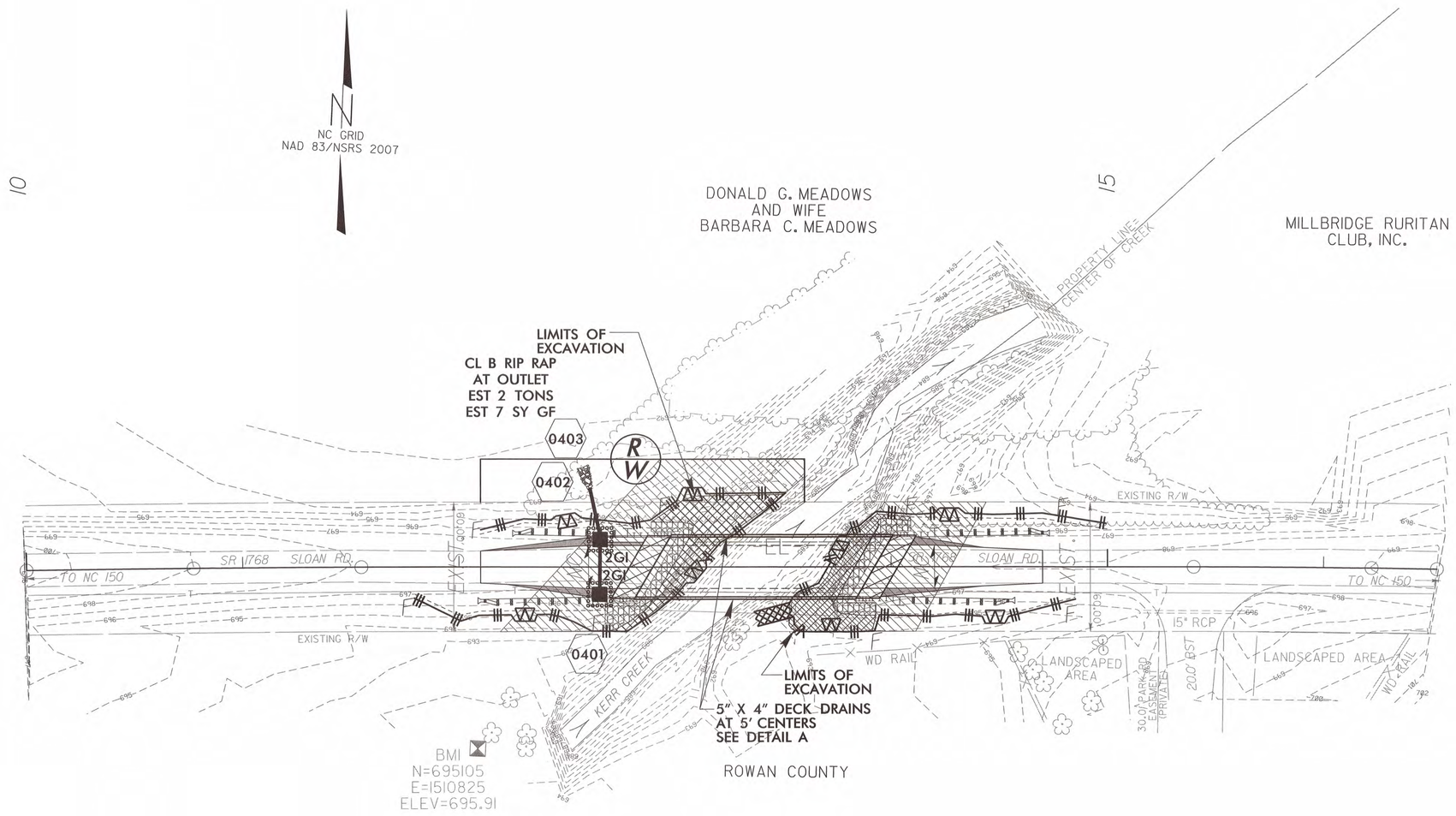

ENVIRONMENTALLY SENSITIVE AREA
SEE PROJECT SPECIAL PROVISIONS

NOTES: ANY DEVIATION FROM OPTIONS GIVEN WILL REQUIRE PRIOR APPROVAL BY ENGINEER.

ADDITIONAL EROSION CONTROL DEVICES MAY NEED TO BE INSTALLED AS DIRECTED BY THE ENGINEER.

STATE	STATE PROJECT REFERENCE NO.	SHEET NO.	TOTAL SHEETS
N.C.	BD-5109AD	RF-1	
STATE PROJ. NO.	F. A. PROJ. NO.	DESCRIPTION	

PLANTING DETAILS

SEEDLING / LINER BAREROOT PLANTING DETAIL

HEALING IN

1. Locate a healing-in site in a shady, well protected area.
2. Excavate a flat bottom trench 12 inches deep and provide drainage.

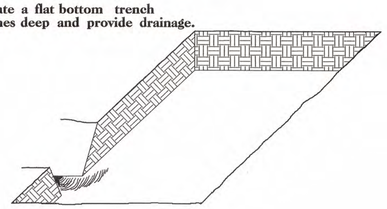

3. Backfill the trench with 2 inches well rotted sawdust. Place a 2 inch layer of well rotted sawdust at a sloping angle at one end of the trench.

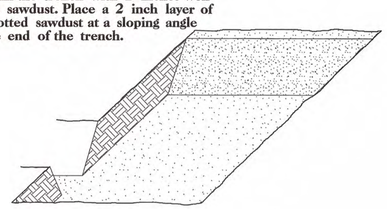

4. Place a single layer of plants against the sloping end so that the root collar is at ground level.

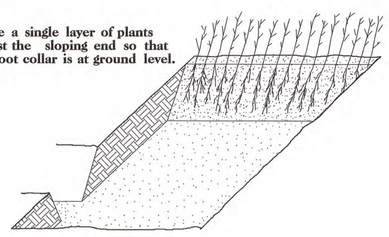

5. Place a 2 inch layer of well rotted sawdust over the roots maintaining a sloping angle.

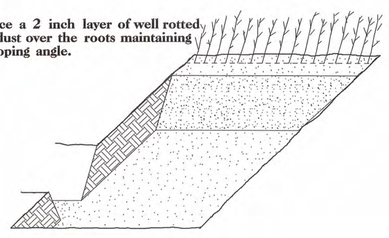

6. Repeat layers of plants and sawdust as necessary and water thoroughly.

DIBBLE PLANTING METHOD
USING THE KBC PLANTING BAR

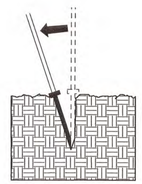

1. Insert planting bar as shown and pull handle toward planter.

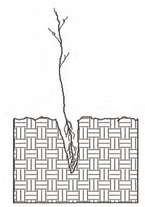

2. Remove planting bar and place seedling at correct depth.

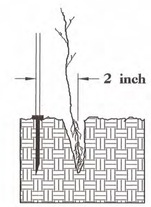

3. Insert planting bar 2 inches toward planter from seedling.

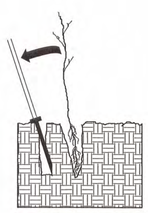

4. Pull handle of bar toward planter, firming soil at bottom.

5. Push handle forward firming soil at top.

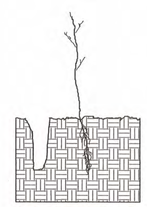

6. Leave compaction hole open. Water thoroughly.

PLANTING NOTES:

PLANTING BAG
During planting, seedlings shall be kept in a moist canvas bag or similar container to prevent the root systems from drying.

KBC PLANTING BAR
Planting bar shall have a blade with a triangular cross section, and shall be 12 inches long, 4 inches wide and 1 inch thick at center.

ROOT PRUNING
All seedlings shall be root pruned, if necessary, so that no roots extend more than 10 inches below the root collar.

REFORESTATION

☐ TREE REFORESTATION SHALL BE PLANTED 6 FT. TO 10 FT. ON CENTER, RANDOM SPACING, AVERAGING 8 FT. ON CENTER, APPROXIMATELY 680 PLANTS PER ACRE.

REFORESTATION

MIXTURE, TYPE, SIZE, AND FURNISH SHALL CONFORM TO THE FOLLOWING:

25%	LIRIODENDRON TULIPIFERA	TULIP POPLAR	12 in - 18 in BR
25%	PLATANUS OCCIDENTALIS	SYCAMORE	12 in - 18 in BR
25%	FRAXINUS PENNSYLVANICA	GREEN ASH	12 in - 18 in BR
25%	BETULA NIGRA	RIVER BIRCH	12 in - 18 in BR

REFORESTATION DETAIL SHEET

N.C.D.O.T. - ROADSIDE ENVIRONMENTAL UNIT

T.I.P. NO.	SHEET NO.
BD-5901AD	UO-1

STATE OF NORTH CAROLINA
DIVISION OF HIGHWAYS

UTILITIES BY OTHERS PLANS
ROWAN COUNTY

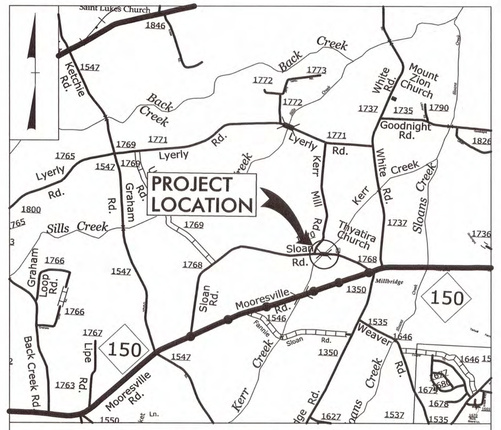

VICINITY MAP

DETOUR ROUTE

LOCATION: REPLACE EXISTING BRIDGE NO.14 WITH CORED SLAB BRIDGE

TYPE OF WORK: AERIAL AND BURIED UTILITES

NAD 83
NC GRID

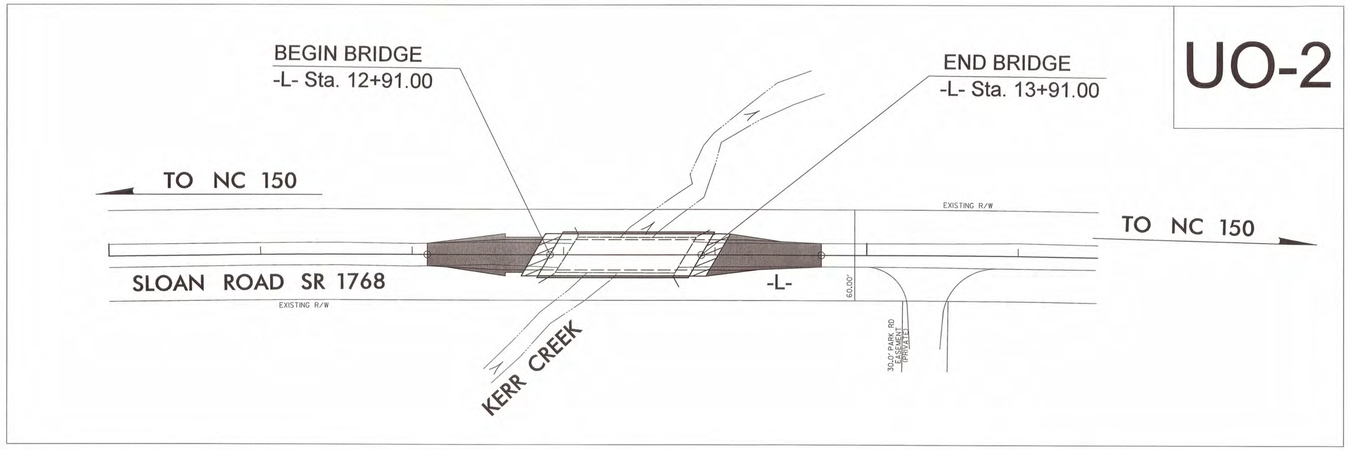

INCOMPLETE PLANS
DO NOT USE FOR R/W ACQUISITION

PRELIMINARY PLANS
DO NOT USE FOR CONSTRUCTION

TIP PROJECT: BD-5109AD

CONTRACT:

$$$$SYSTIME$$$$
$$$$USERNAME$$$$ $$$$DGN$$$$

GRAPHIC SCALES

30 15 0 30 60
PLANS

INDEX OF SHEETS

SHEET NO.	DESCRIPTION
UO-1	TITLE SHEET
UO-2	UTILITY BY OTHERS PLAN SHEET

UTILITY OWNERS ON PROJECT

(A) POWER: DUKE ENERGY: LARRY ROBINSON
336-209-6631 LARRY.ROBINSON2@DUKE-ENERGY.COM
(B) PHONE: AT&T: SUSAN ALLEN 704-732-3241 EXT 222
SALLEN@TELICS.COM

PLANS PREPARED BY:

CH ENGINEERING
3220 GLEN ROYAL RD. RALEIGH, NC 27617
TELE 919.788.0224 FAX 919.788.0232
NC LICENSE #P-0189

UTILITIES PROJECT ENGINEER

Mary Jo Lee, P.E.

PREPARED IN THE OFFICE OF:

DIVISION OF HIGHWAYS
UTILITIES UNIT
UTILITIES ENGINEERING

1555 MAIL SERVICES CENTER
RALEIGH NC 27699-1555
PHONE (919) 707-6690
FAX (919) 250-4151

Roger Worthington, P.E. UTILITIES SECTION ENGINEER

5/14/99

PROJECT REFERENCE NO.	SHEET NO.
BD-5109AD	UO-2

UTILITIES BY OTHERS

CONTACT INFORMATION FOR UTILITIES

POWER: DUKE ENERGY: LARRY ROBINSON 336–209–6631 LARRY.ROBINSON2@DUKE–ENERGY.COM
PHONE: AT&T: SUSAN ALLEN 704–732–3241 EXT 222 SALLEN@TELICS.COM

CH ENGINEERING
3220 GLEN ROYAL RD. RALEIGH, NC 27617
TELE 919.788.0224 FAX 919.788.0232
NC LICENSE #P-0189

NOTE:
ALL PROPOSED UTILITY WORK SHOWN ON THIS SHEET WILL BE DONE BY OTHERS. NO PAYMENT WILL BE MADE TO THE CONTRACTOR FOR PROPOSED UTILITY WORK SHOWN ON THIS SHEET.

INCOMPLETE PLANS
DO NOT USE FOR R/W ACQUISITION

PRELIMINARY PLANS
DO NOT USE FOR CONSTRUCTION

30 15 0 30 60
PLANS

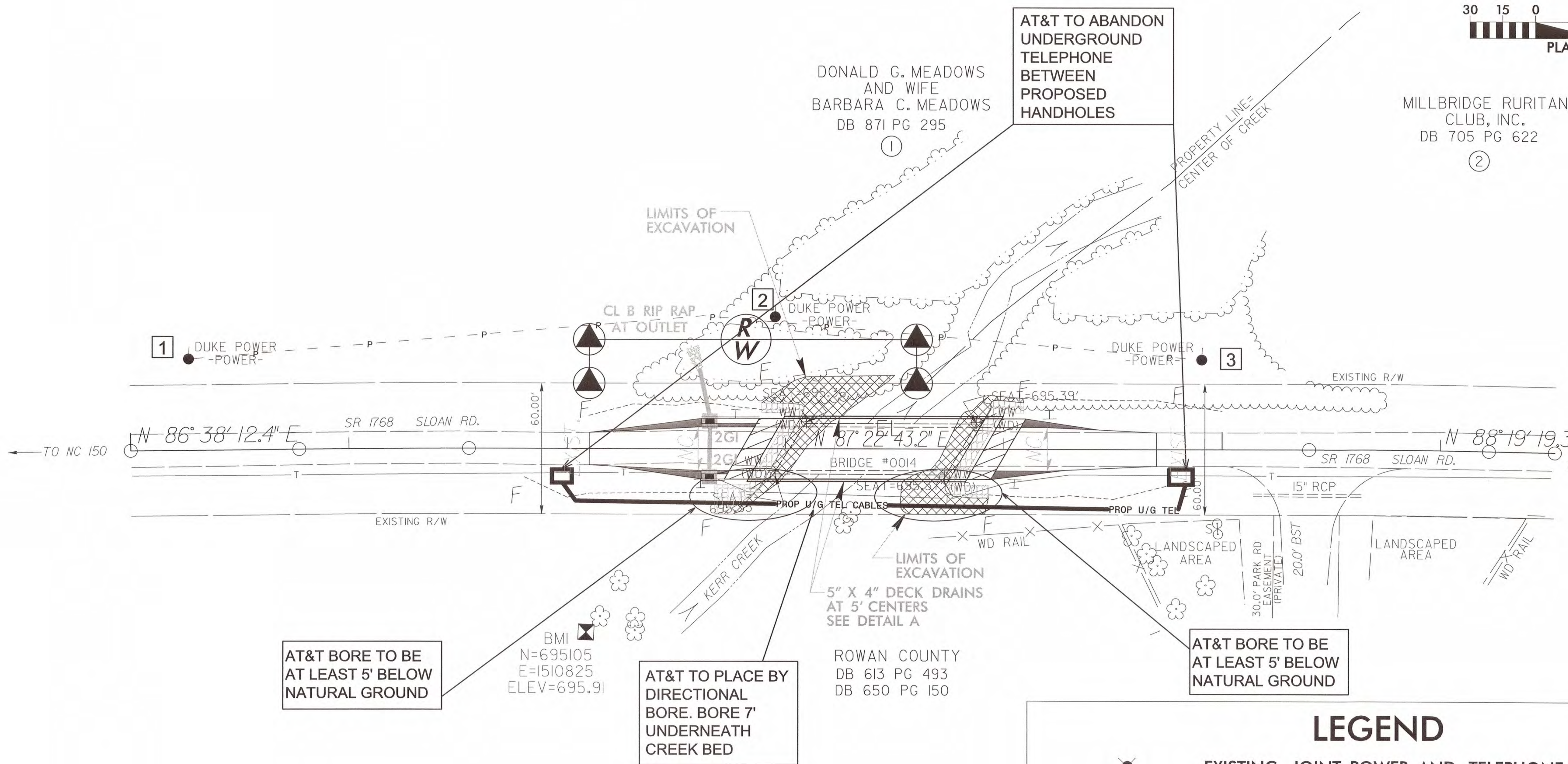

LEGEND

- EXISTING JOINT POWER AND TELEPHONE POLE
- EXISTING POWER POLE
- EXISTING TELEPHONE POLE
- PROPOSED JOINT POWER AND TELEPHONE POLE
- PROPOSED POWER POLE
- PROPOSED TELEPHONE POLE
- —T— EXISTING U/G TELEPHONE LINE
- — — P — — EXISTING O/H POWER LINE
- PROP O/H POW LINES — PROPOSED O/H POWER
- PROP U/G TEL CABLES — PROPOSED U/G TELEPHONE LINE

$$$$$$SYSTIME$$$$$ $$$$$$$$DGN$$$$$$$$$$$$$$$$$$ $$$$USERNAME$$$$

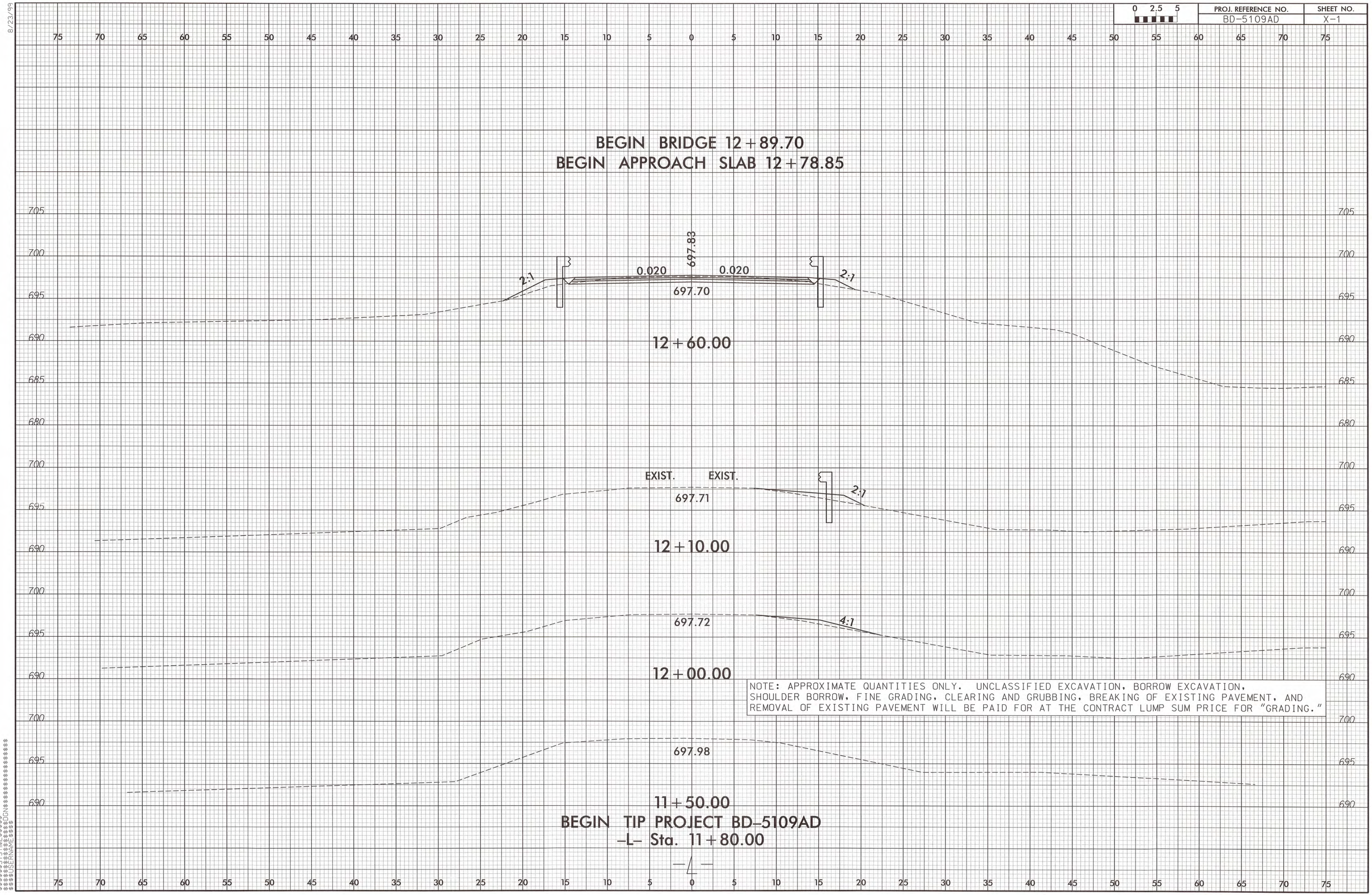

NOTE: APPROXIMATE QUANTITIES ONLY. UNCLASSIFIED EXCAVATION, BORROW EXCAVATION, SHOULDER BORROW, FINE GRADING, CLEARING AND GRUBBING, BREAKING OF EXISTING PAVEMENT, AND REMOVAL OF EXISTING PAVEMENT WILL BE PAID FOR AT THE CONTRACT LUMP SUM PRICE FOR "GRADING."

8/23/99

$$$$$SYSTIME$$$$
$$$$$DGN$$$$$$$$$$$$$$$$$
$$$$$USERNAME$$$$

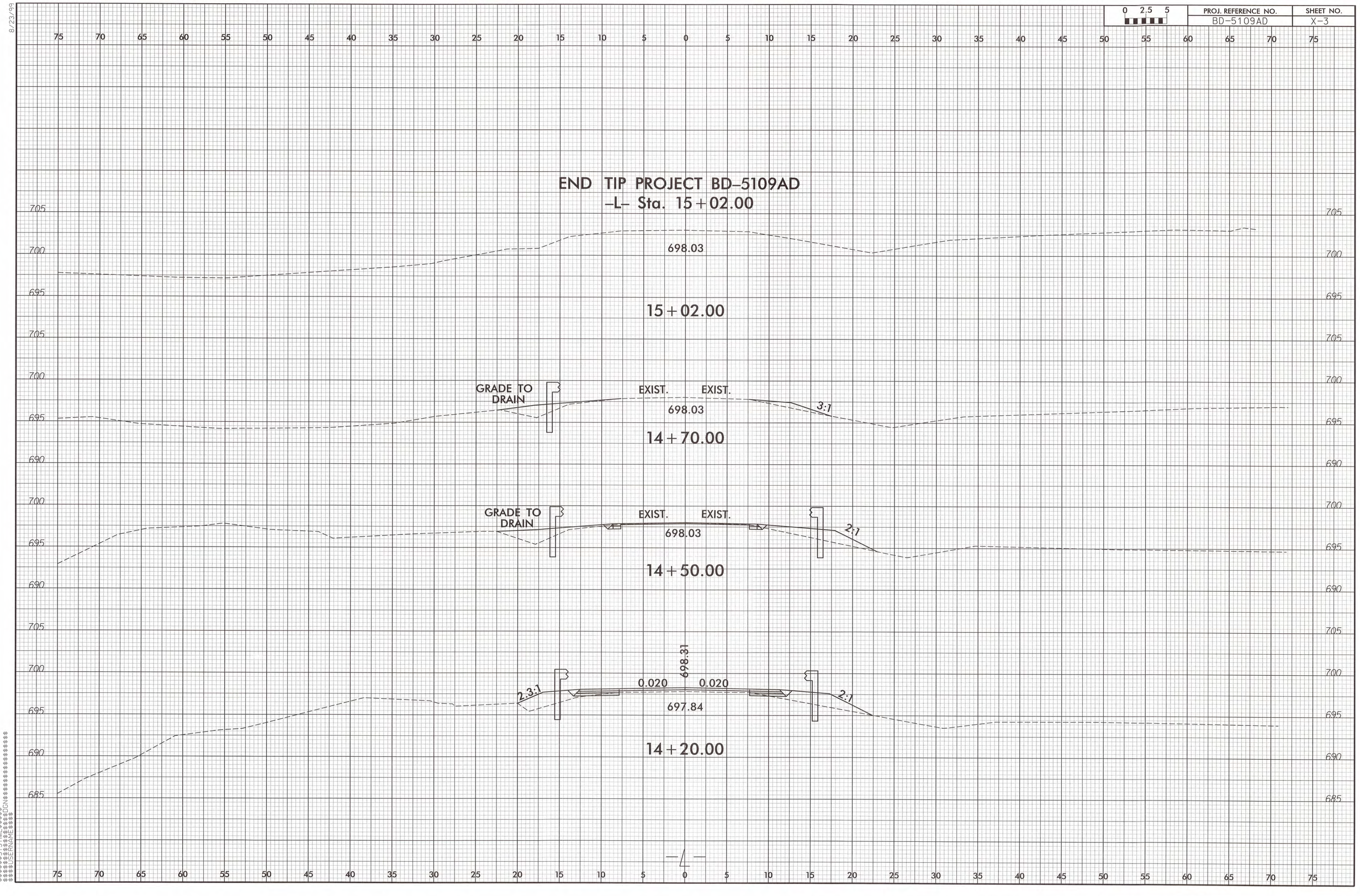

0 2.5 5
PROJ. REFERENCE NO.
BD-5109AD
SHEET NO.
X-3
END TIP PROJECT BD-5109AD
-L- Sta. 15+02.00
698.03
15+02.00
GRADE TO DRAIN
EXIST.
EXIST.
698.03
3:1
14+70.00
GRADE TO DRAIN
EXIST.
EXIST.
698.03
2:1
14+50.00
698.31
0.020
0.020
2.3:1
2:1
697.84
14+20.00

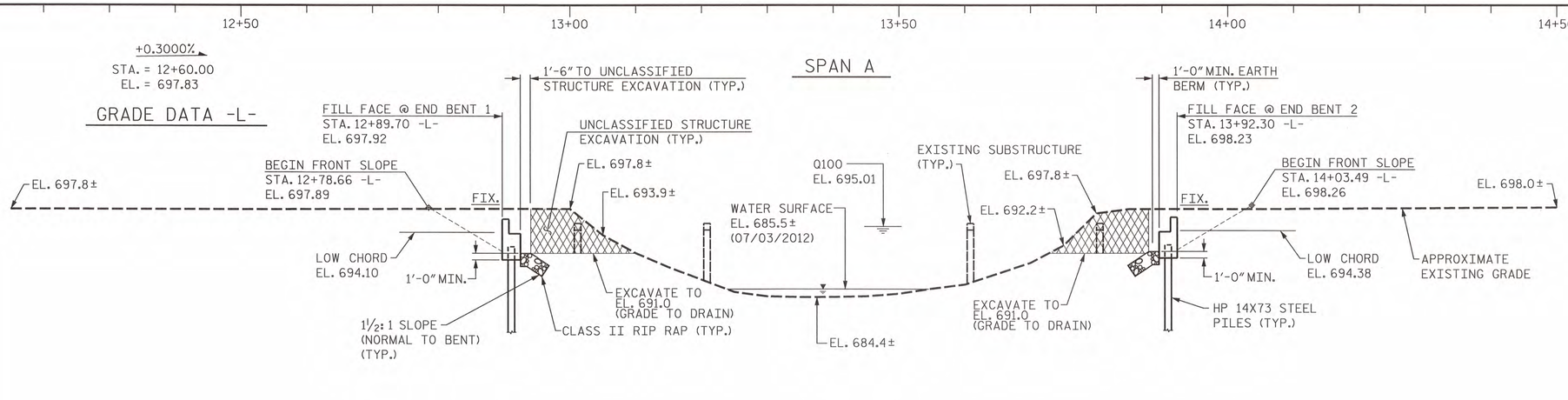

SECTION ALONG -L-

SECTIONS AT END BENTS ARE AT RIGHT ANGLES

HYDRAULIC DATA

DESIGN DISCHARGE	2280 CFS
FREQUENCY OF DESIGN FLOOD	25 YRS.
DESIGN HIGH WATER ELEVATION	694.6
DRAINAGE AREA	10.6 SQ.MI.
BASE DISCHARGE (Q100)	3314 CFS
BASE HIGH WATER ELEVATION	695.01

OVERTOPPING FLOOD DATA

OVERTOPPING FLOOD DISCHARGE	5400 CFS
FREQUENCY OF OVERTOPPING FLOOD	500+ YRS.
OVERTOPPING FLOOD ELEVATION	697.7

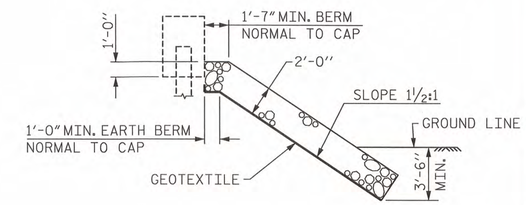

RIP RAP DETAIL

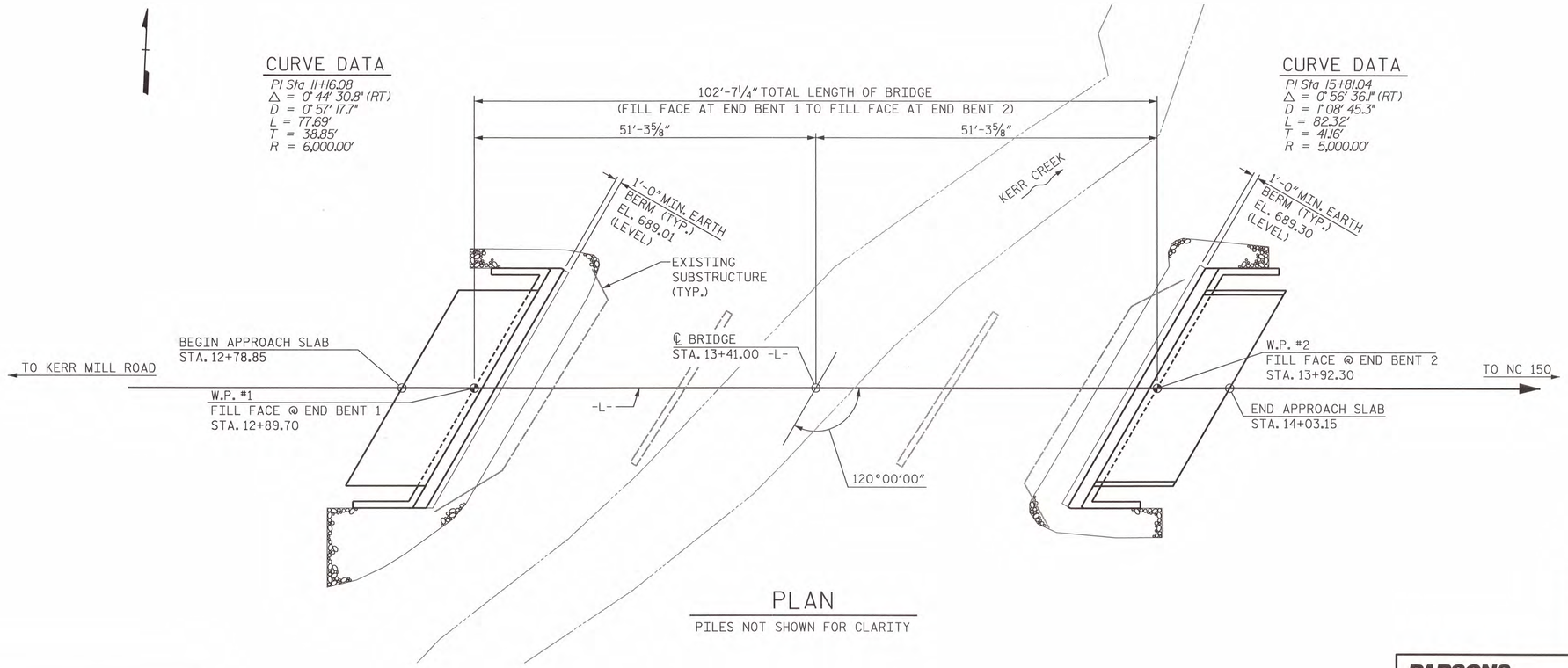

PLAN

PILES NOT SHOWN FOR CLARITY

I HEREBY CERTIFY THESE PLANS ARE THE AS-BUILT PLANS

PROJECT NO. BD-5109AD

ROWAN COUNTY

STATION: 13+41.00 -L-

SHEET 1 OF 2 REPLACES BRIDGE NO. 14

STATE OF NORTH CAROLINA
DEPARTMENT OF TRANSPORTATION
RALEIGH

GENERAL DRAWING

FOR BRIDGE ON SR 1768 OVER KERR CREEK BETWEEN SR 1770 AND NC 150

DESIGNED BY:	J. SMITH	DATE :	MAY 2014
DRAWN BY:	K. WHITE/R. KHARWA	DATE :	MAY 2014
CHECKED BY:	J. DOUGHTY	DATE :	JUNE 2014
DESIGN ENGINEER OF RECORD:	J. DOUGHTY	DATE :	OCT 2014

PARSONS BRINCKERHOFF
434 FAYETTEVILLE STREET
SUITE 1500
RALEIGH, NC 27601
LICENSE NO. F-0165

NORTH CAROLINA PROFESSIONAL SEAL 032967 ENGINEER JASON R. DOUGHTY
11/7/14

REVISIONS						SHEET NO.
NO.	BY:	DATE:	NO.	BY:	DATE:	S-1
1			3			TOTAL SHEETS
2			4			17

11/7/2014
BD-5109AD_SD_GD_01.dgn

BM #1 : RR SPIKE SET IN ROOT OF 24"FORKED ELM TREE, STA. 12+09.00, 84' RT., EL. 695.91

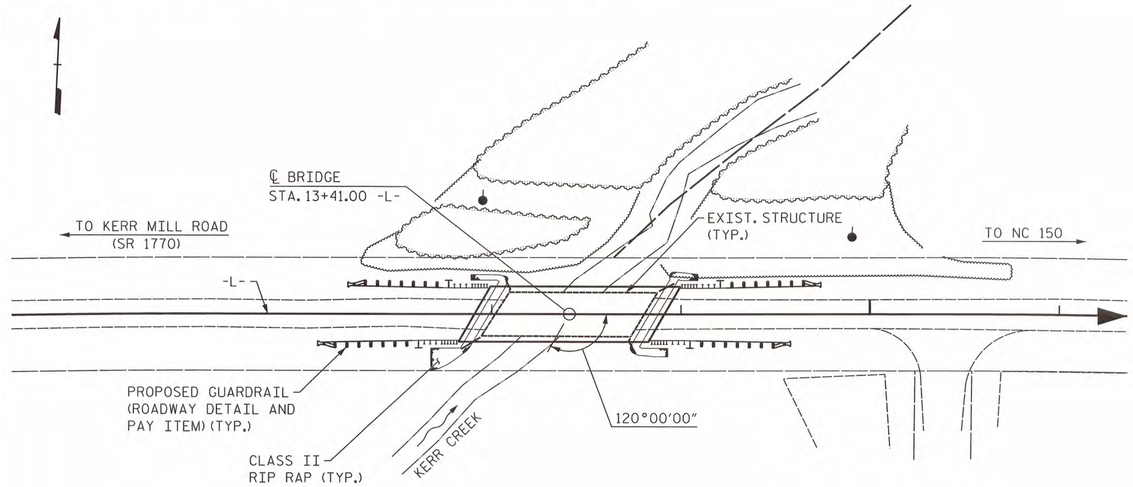

LOCATION SKETCH

NOTES:
NO KNOWN UTILITY CONFLICTS

NOTES:

ASSUMED LIVE LOAD = HL 93 OR ALTERNATE LOADING.

THIS BRIDGE HAS BEEN DESIGNED IN ACCORDANCE WITH THE AASHTO LRFD BRIDGE DESIGN SPECIFICATIONS.

FOR OTHER DESIGN DATA AND GENERAL NOTES, SEE SHEET SN.

FOR EROSION CONTROL MEASURES, SEE EROSION CONTROL PLANS.

THE EXISTING STRUCTURE CONSISTING OF TWO (2) 19'-8" SPANS AND ONE (1) 40'-0" SPAN WITH A CLEAR ROADWAY WIDTH OF 23'-6" AND A TIMBER DECK COVERED WITH ASPHALT SUPPORTED BY STEEL I-BEAMS AND TIMBER SUBSTRUCTURE SHALL BE REMOVED.

REMOVAL OF THE EXISTING BRIDGE SHALL BE PERFORMED SO AS NOT TO ALLOW DEBRIS TO FALL INTO THE WATER. THE CONTRACTOR SHALL REMOVE THE BRIDGE AND SUBMIT PLANS FOR DEMOLITION IN ACCORDANCE WITH ARTICLE 402-2 OF THE STANDARD SPECIFICATIONS.

THE MATERIAL SHOWN IN THE CROSS-HATCHED AREA SHALL BE EXCAVATED FOR A DISTANCE OF 25 FT. EACH SIDE OF CENTERLINE ROADWAY AS DIRECTED BY THE ENGINEER. THIS WORK WILL BE PAID FOR AT THE CONTRACT LUMP SUM PRICE FOR UNCLASSIFIED STRUCTURE EXCAVATION. SEE SECTION 412 OF THE STANDARD SPECIFICATIONS.

THE SUBSTRUCTURE OF THE EXISTING BRIDGE INDICATED ON THE PLANS IS FROM THE BEST INFORMATION AVAILABLE. SINCE THIS INFORMATION IS SHOWN FOR THE CONVENIENCE OF THE CONTRACTOR, THE CONTRACTOR SHALL HAVE NO CLAIM WHATSOEVER AGAINST THE DEPARTMENT OF TRANSPORTATION FOR ANY DELAYS OR ADDITIONAL COST INCURRED BASED ON DIFFERENCES BETWEEN THE EXISTING BRIDGE SUBSTRUCTURE SHOWN ON THE PLANS AND THE ACTUAL CONDITIONS AT THE PROJECT SITE.

ASPHALT WEARING SURFACE IS INCLUDED IN ROADWAY QUANTITY ON ROADWAY PLANS.

THIS STRUCTURE HAS BEEN DESIGNED IN ACCORDANCE WITH "HEC 18 - EVALUATING SCOUR AT BRIDGES."

THE CONTRACTOR SHALL PROVIDE INDEPENDENT ASSURANCE SAMPLES OF REINFORCING STEEL AS FOLLOWS: FOR PROJECTS REQUIRING UP TO 400 TONS OF REINFORCING STEEL, ONE 30 INCH SAMPLE OF EACH SIZE BAR USED, AND FOR PROJECTS REQUIRING OVER 400 TONS OF REINFORCING STEEL, TWO 30 INCH SAMPLES OF EACH SIZE BAR USED. THE BARS FROM WHICH THE SAMPLES ARE TAKEN MUST THEN BE SPLICED WITH REPLACEMENT BARS OF THE SIZE AND LENGTH OF THE SAMPLE, PLUS A MINIMUM LAP SPLICE OF THIRTY BAR DIAMETERS. PAYMENT FOR THE SAMPLES OF REINFORCING STEEL SHALL BE CONSIDERED INCIDENTAL TO VARIOUS PAY ITEMS.

THIS BRIDGE IS LOCATED IN SEISMIC ZONE 1.

INASMUCH AS THE PAINT SYSTEM ON THE EXISTING STRUCTURAL STEEL CONTAINS LEAD, THE CONTRACTOR'S ATTENTION IS DIRECTED TO ARTICLE 107-1 OF THE STANDARD SPECIFICATIONS. ANY COSTS RESULTING FROM COMPLIANCE WITH APPLICABLE STATE OR FEDERAL REGULATIONS PERTAINING TO HANDLING OF MATERIALS CONTAINING LEAD BASED PAINT SHALL BE INCLUDED IN THE BID PRICE FOR "REMOVAL OF EXISTING STRUCTURE AT STATION 13+41.00."

FOR SUBMITTAL OF WORKING DRAWINGS, SEE SPECIAL PROVISIONS.

FOR FALSEWORK AND FORMWORK, SEE SPECIAL PROVISIONS.

FOR CRANE SAFETY, SEE SPECIAL PROVISIONS.

FOR GROUT FOR STRUCTURES, SEE SPECIAL PROVISIONS.

LOCATIONS OF EXISTING PILES ARE UNKNOWN. CONTRACTOR SHALL BE AWARE THAT EXISTING PILES MAY BE ENCOUNTERED DURING PILE DRIVING AT END BENT NO. 1 AND END BENT NO. 2.

FOUNDATION NOTES:

FOR PILES, SEE SECTION 450 OF THE STANDARD SPECIFICATIONS.

PILES AT END BENT NO. 1 ARE DESIGNED FOR A FACTORED RESISTANCE OF 140 TONS PER PILE.

DRIVE PILES AT END BENT NO. 1 TO A REQUIRED DRIVING RESISTANCE OF 233 TONS PER PILE.

PILES AT END BENT NO. 2 ARE DESIGNED FOR A FACTORED RESISTANCE OF 140 TONS PER PILE.

DRIVE PILES AT END BENT NO. 2 TO A REQUIRED DRIVING RESISTANCE OF 233 TONS PER PILE.

IT HAS BEEN ESTIMATED THAT A HAMMER WITH AN EQUIVALENT RATED ENERGY OF 40-45 KIP-FT PER BLOW WILL BE REQUIRED TO DRIVE PILES AT END BENTS NO. 1 AND 2. THIS ESTIMATED ENERGY RANGE DOES NOT RELEASE THE CONTRACTOR FROM PROVIDING EQUIPMENT IN ACCORDANCE WITH SUBARTICLE 450-3(D) OF THE STANDARD SPECIFICATIONS.

TOTAL BILL OF MATERIAL

	REMOVAL OF EXISTING STRUCTURE	UNCLASSIFIED STRUCTURE EXCAVATION	CLASS A CONCRETE	BRIDGE APPROACH SLABS	REINFORCING STEEL	HP 14x73 STEEL PILES		TWO BAR METAL RAIL	1'-2" x 2'-9½" CONCRETE PARAPET	RIP RAP CLASS II (2'-0" THICK)	GEOTEXTILE FOR DRAINAGE	ELASTOMERIC BEARINGS	3'-0" x 3'-3" PRESTRESSED CONCRETE BOX BEAMS	
	LUMP SUM	LUMP SUM	CU. YDS.	LUMP SUM	LBS.	NO.	LIN. FT.	LIN. FT.	LIN. FT.	TONS	SQ. YDS.	LUMP SUM	NO.	LIN. FT.
SUPERSTRUCTURE				LUMP SUM				183.55	200.0			LUMP SUM	10	1000
END BENT NO. 1		LUMP SUM	30.3		4731	5	205			87	97			
END BENT NO. 2		LUMP SUM	30.3		4731	5	180			90	100			
TOTAL	LUMP SUM	LUMP SUM	60.6	LUMP SUM	9462	10	385	183.55	200.0	177	197	LUMP SUM	10	1000

PROJECT NO. BD-5109AD
ROWAN COUNTY
STATION: 13+41.00 -L-

SHEET 2 OF 2

STATE OF NORTH CAROLINA
DEPARTMENT OF TRANSPORTATION
RALEIGH

GENERAL DRAWING
FOR BRIDGE ON SR 1768 OVER
KERR CREEK BETWEEN
SR 1770 AND NC 150

PARSONS BRINCKERHOFF
434 FAYETTEVILLE STREET
SUITE 1500
RALEIGH, NC 27601
LICENSE NO. F-0165

NORTH CAROLINA PROFESSIONAL SEAL 032967 ENGINEER JASON R. DOUGHTY
11/11/14

REVISIONS						SHEET NO.
NO.	BY:	DATE:	NO.	BY:	DATE:	S-2
1			3			TOTAL SHEETS
2			4			17

DESIGNED BY:	J. SMITH	DATE :	MAY 2014
DRAWN BY:	R. KHARWA	DATE :	SEPT 2014
CHECKED BY:	J. DOUGHTY	DATE :	SEPT 2014
DESIGN ENGINEER OF RECORD:	J. DOUGHTY	DATE :	OCT 2014

11/6/2014
BD-5109AD_SD_LS_02.dgn

LOAD AND RESISTANCE FACTOR RATING (LRFD) SUMMARY FOR PRESTRESSED CONCRETE GIRDERS

LEVEL		VEHICLE	WEIGHT (W) (TONS)	CONTROLLING LOAD RATING	MINIMUM RATING FACTORS (RF)	TONS = W X RF	STRENGTH I LIMIT STATE											SERVICE III LIMIT STATE						COMMENT NUMBER
								MOMENT					SHEAR						MOMENT					
							LIVELOAD FACTORS	DISTRIBUTION FACTORS (DF)	RATING FACTOR	SPAN	GIRDER LOCATION	DISTANCE FROM LEFT END OF SPAN (ft)	DISTRIBUTION FACTORS (DF)	RATING FACTOR	SPAN	GIRDER LOCATION	DISTANCE FROM LEFT END OF SPAN (ft)	LIVELOAD FACTORS	DISTRIBUTION FACTORS (DF)	RATING FACTOR	SPAN	GIRDER LOCATION	DISTANCE FROM LEFT END OF SPAN (ft)	
DESIGN LOAD RATING		HL-93(Inv)	N/A	1	1.146	--	1.75	0.246	1.4	A	EL	49.134	0.614	1.15	A	EL	9.827	0.80	0.246	**1.15**	A	EL	**49.134**	
		HL-93(Opr)	N/A	--	1.486	--	1.35	0.246	1.81	A	EL	49.134	0.614	1.49	A	EL	9.827	N/A	--	--	--	--	--	
		HS-20(Inv)	36.000	2	1.519	54.686	1.75	0.246	1.95	A	EL	49.134	0.614	**1.52**	A	EL	**9.827**	0.80	0.246	1.60	A	EL	49.134	
		HS-20(Opr)	36.000	--	1.969	70.889	1.35	0.246	2.52	A	EL	49.134	0.614	1.97	A	EL	9.827	N/A	--	--	--	--	--	
LEGAL LOAD RATING	SV	SNSH	13.500	--	3.795	51.239	1.4	0.246	5.76	A	EL	49.134	0.614	4.67	A	EL	9.827	0.80	0.246	3.80	A	EL	49.134	
		SNGARBS2	20.000	--	2.75	55	1.4	0.246	4.18	A	EL	49.134	0.614	3.27	A	EL	9.827	0.80	0.246	2.75	A	EL	49.134	
		SNAGRIS2	22.000	--	2.573	56.599	1.4	0.246	3.91	A	EL	49.134	0.614	3.02	A	EL	9.827	0.80	0.246	2.57	A	EL	49.134	
		SNCOTTS3	27.250	--	1.886	51.405	1.4	0.246	2.86	A	EL	49.134	0.614	2.32	A	EL	9.827	0.80	0.246	1.89	A	EL	49.134	
		SNAGGRS4	34.925	--	1.546	54.002	1.4	0.246	2.35	A	EL	49.134	0.614	1.9	A	EL	9.827	0.80	0.246	1.55	A	EL	49.134	
		SNS5A	35.550	--	1.514	53.825	1.4	0.246	2.3	A	EL	49.134	0.614	1.9	A	EL	9.827	0.80	0.246	1.51	A	EL	49.134	
		SNS6A	39.950	--	1.377	55.004	1.4	0.246	2.09	A	EL	49.134	0.614	1.72	A	EL	9.827	0.80	0.246	1.38	A	EL	49.134	
		SNS7B	42.000	--	1.311	55.05	1.4	0.246	1.99	A	EL	49.134	0.614	1.68	A	EL	9.827	0.80	0.246	1.31	A	EL	49.134	
	TTST	TNAGRIT3	33.000	--	1.675	55.287	1.4	0.246	2.54	A	EL	49.134	0.614	2.06	A	EL	9.827	0.80	0.246	1.68	A	EL	49.134	
		TNT4A	33.075	--	1.679	55.547	1.4	0.246	2.55	A	EL	49.134	0.614	2.02	A	EL	9.827	0.80	0.246	1.68	A	EL	49.134	
		TNT6A	41.600	--	1.362	56.644	1.4	0.246	2.07	A	EL	49.134	0.614	1.76	A	EL	9.827	0.80	0.246	1.36	A	EL	49.134	
		TNT7A	42.000	--	1.362	57.22	1.4	0.246	2.07	A	EL	49.134	0.614	1.73	A	EL	9.827	0.80	0.246	1.36	A	EL	49.134	
		TNT7B	42.000	--	1.395	58.575	1.4	0.246	2.12	A	EL	49.134	0.614	1.65	A	EL	9.827	0.80	0.246	1.39	A	EL	49.134	
		TNAGRIT4	43.000	--	1.338	57.52	1.4	0.246	2.03	A	EL	49.134	0.614	1.6	A	EL	9.827	0.80	0.246	1.34	A	EL	49.134	
		TNAGT5A	45.000	--	1.266	56.99	1.4	0.246	1.92	A	EL	49.134	0.614	1.57	A	EL	9.827	0.80	0.246	1.27	A	EL	49.134	
		TNAGT5B	45.000	3	1.256	56.51	1.4	0.246	1.91	A	EL	49.134	0.614	1.53	A	EL	9.827	0.80	0.246	**1.26**	A	EL	**49.134**	

LOAD FACTORS:

DESIGN LOAD RATING FACTORS	LIMIT STATE	γ_{DC}	γ_{DW}
	STRENGTH I	1.25	1.50
	SERVICE III	1.00	1.00

NOTES:

MINIMUM RATING FACTORS ARE BASED ON THE STRENGTH I AND SERVICE III LIMIT STATES.

ALLOWABLE STRESSES FOR SERVICE III LIMIT STATE ARE AS REQUIRED FOR DESIGN.

COMMENTS:

1.
2.
3.
4.

CONTROLLING LOAD RATING

(1) DESIGN LOAD RATING (HL-93)
(2) DESIGN LOAD RATING (HS-20)
(3) LEGAL LOAD RATING **
** SEE CHART FOR VEHICLE TYPE

GIRDER LOCATION

I - INTERIOR GIRDER
EL - EXTERIOR LEFT GIRDER
ER - EXTERIOR RIGHT GIRDER

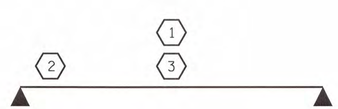

LRFR SUMMARY

PROJECT NO. BD-5109AD
ROWAN COUNTY
STATION: 13+41.00 -L-

STATE OF NORTH CAROLINA
DEPARTMENT OF TRANSPORTATION
RALEIGH

STANDARD
LRFR SUMMARY FOR 100' BOX BEAM UNIT 60° SKEW & 120° SKEW
(NON-INTERSTATE TRAFFIC)

ASSEMBLED BY: J. SMITH DATE: MAY 2014
DRAWN BY: J. SMITH DATE: MAY 2014
CHECKED BY: J. DOUGHTY DATE: JUNE 2014
DESIGN ENGINEER OF RECORD: J. DOUGHTY DATE: OCT 2014
DRAWN BY: TMG 11/11
CHECKED BY: AAC 11/11

PARSONS BRINCKERHOFF
434 FAYETTEVILLE STREET
SUITE 1500
RALEIGH, NC 27601
LICENSE NO. F-0165

NORTH CAROLINA PROFESSIONAL SEAL 032967 ENGINEER JASON R. DOUGHTY
11/11/14

REVISIONS						SHEET NO.
NO.	BY:	DATE:	NO.	BY:	DATE:	S-3
1			3			TOTAL SHEETS
2			4			17

STD. NO. 39LRFR1_60&120S_100L

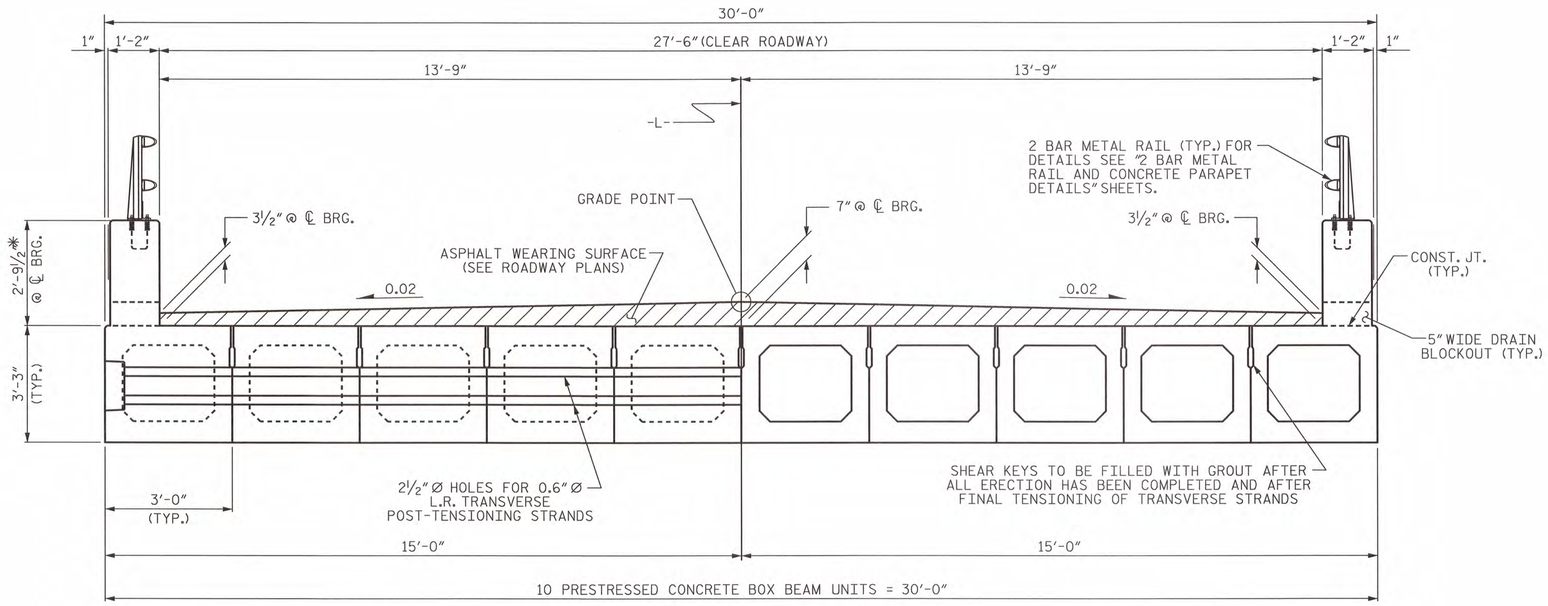

HALF SECTION
AT INTERMEDIATE DIAPHRAGMS

HALF SECTION
THROUGH VOIDS

TYPICAL SECTION

✳ THE MAXIMUM CONCRETE PARAPET HEIGHT AND ASPHALT THICKNESS IS SHOWN. THE HEIGHT OF THE CONCRETE PARAPET AND ASPHALT THICKNESS VARIES WHILE THE TOP OF THE CONCRETE PARAPET FOLLOWS THE PROFILE OF THE GUTTERLINE. FOR RAIL HEIGHT DETAILS AND ASPHALT THICKNESS, SEE "GUTTERLINE ASPHALT THICKNESS & PARAPET HEIGHT" TABLE ON SHEET 4 OF 4.

FIXED END

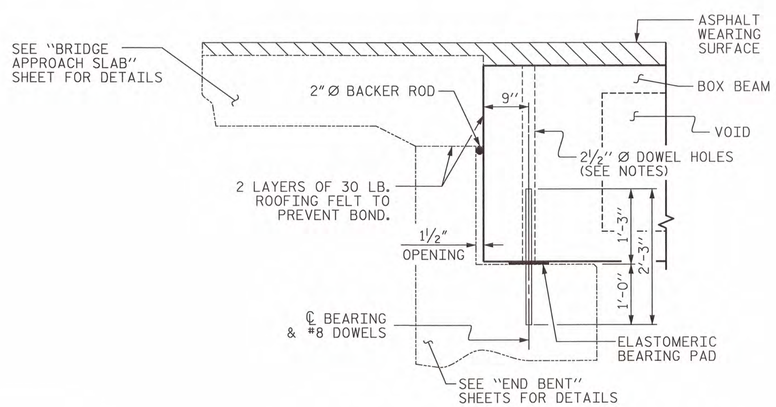

SECTION AT END BENT

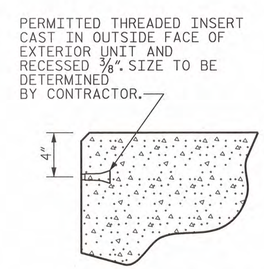

THREADED INSERT DETAIL

NOTES

ALL PRESTRESSING STRANDS SHALL BE 7-WIRE LOW RELAXATION GRADE 270 STRANDS AND SHALL CONFORM TO AASHTO M203 EXCEPT FOR SAMPLING REQUIREMENTS WHICH SHALL BE IN ACCORDANCE WITH THE STANDARD SPECIFICATIONS.

ALL REINFORCING STEEL CAST WITH THE BOX BEAM SECTIONS SHALL BE GRADE 60 AND SHALL BE INCLUDED IN THE UNIT PRICE BID FOR PRESTRESSED CONCRETE BOX BEAMS.

FLAME CUTTING OF THE TRANSVERSE POST-TENSIONING STRAND IS NOT ALLOWED.

RECESSES FOR TRANSVERSE STRANDS SHALL BE GROUTED AFTER THE TENSIONING OF THE STRANDS.

THE 2½" Ø DOWEL HOLES AT FIXED ENDS OF BOX BEAM SECTIONS SHALL BE FILLED WITH NON-SHRINK GROUT.

THE BACKER RODS SHALL CONFORM TO THE REQUIREMENTS OF TYPE M BOND BREAKER. SEE SECTION 1028 OF THE STANDARD SPECIFICATIONS.

THE TRANSFER OF LOAD FROM THE ANCHORAGES TO THE BOX BEAM UNIT SHALL BE DONE WHEN THE CONCRETE HAS REACHED A COMPRESSIVE STRENGTH OF NOT LESS THAN 6000 PSI.

ALL REINFORCING STEEL IN VERTICAL CONCRETE BARRIER RAILS SHALL BE EPOXY COATED.

PRESTRESSING STRANDS SHALL BE CUT FLUSH WITH THE BOX BEAM UNIT ENDS.

APPLY EPOXY PROTECTIVE COATING TO BOX BEAM UNIT ENDS.

THE LOCATION OF THE VOID DRAINS MAY BE SHIFTED SLIGHTLY WHERE NECESSARY TO CLEAR PRESTRESSING STRANDS OR TRANSVERSE REINFORCING STEEL.

FOR GROUT FOR STRUCTURES, SEE SPECIAL PROVISIONS.

THE PERMITTED THREADED INSERTS ARE DETAILED AS AN OPTION FOR THE CONTRACTOR TO ATTACH FALSEWORK AND FORMWORK DURING CONSTRUCTION.

THE PERMITTED THREADED INSERTS IN THE EXTERIOR UNITS SHALL BE SIZED BY THE CONTRACTOR, SPACED AT 4'-0" CENTERS AND GALVANIZED IN ACCORDANCE WITH SECTION 1076 OF THE STANDARD SPECIFICATIONS. STAINLESS STEEL THREADED INSERTS MAY BE USED AS AN ALTERNATE.

THE PERMITTED THREADED INSERTS SHALL BE GROUTED BY THE CONTRACTOR IMMEDIATELY FOLLOWING REMOVAL OF THE FALSEWORK.

THE COST OF THE PERMITTED THREADED INSERTS SHALL BE INCLUDED IN THE PRICE BID FOR THE PRECAST UNITS.

THE DRAIN OPENING AT THE GUTTERLINE SHALL BE 4" X 5". THE HEIGHT OF THE BLOCKOUT IN THE CONCRETE PARAPET SHALL EXTEND FROM THE TOP OF THE BOX BEAM UNIT TO THE TOP OF THE DRAIN OPENING.

APPLY EPOXY PROTECTIVE COATING TO EXTERIOR FACE OF THE EXTERIOR BOX BEAM UNITS THAT REQUIRE DRAINS IN THE CONCRETE PARAPET.

PROJECT NO. BD-5109AD
ROWAN COUNTY
STATION: 13+41.00 -L-

SHEET 1 OF 4

ASSEMBLED BY:	J. SMITH	DATE :	MAY 2014
DRAWN BY:	J. SMITH	DATE :	MAY 2014
CHECKED BY:	J. DOUGHTY	DATE :	SEPT 2014
DESIGN ENGINEER OF RECORD:	J. DOUGHTY	DATE :	OCT 2014

DRAWN BY : DGE 8/11
CHECKED BY : TMG 11/11
REV. 8/14 MAA/TMG

PARSONS BRINCKERHOFF
434 FAYETTEVILLE STREET
SUITE 1500
RALEIGH, NC 27601
LICENSE NO. F-0165

NORTH CAROLINA PROFESSIONAL SEAL 032967 ENGINEER JASON B. DOUGHTY
11/11/14

STATE OF NORTH CAROLINA
DEPARTMENT OF TRANSPORTATION
RALEIGH

STANDARD
3'-0" X 3'-3"
PRESTRESSED CONCRETE
BOX BEAM UNIT

REVISIONS						SHEET NO.
NO.	BY:	DATE:	NO.	BY:	DATE:	S-4
1			3			TOTAL SHEETS
2			4			17

STD. NO. 39PCBB1_30

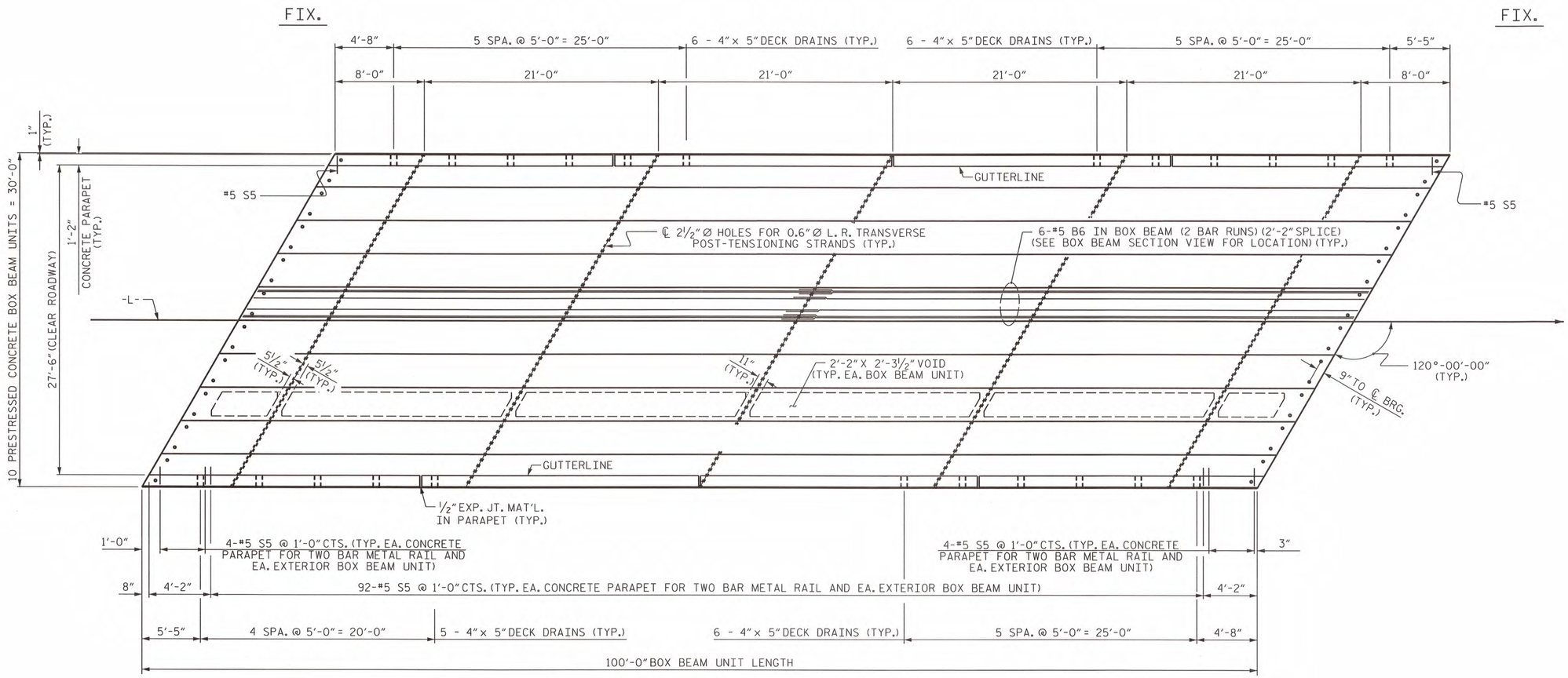

PLAN OF UNIT

FOR CONCRETE PARAPET LAYOUT AND REINFORCING, SEE SHEET NO. S-11

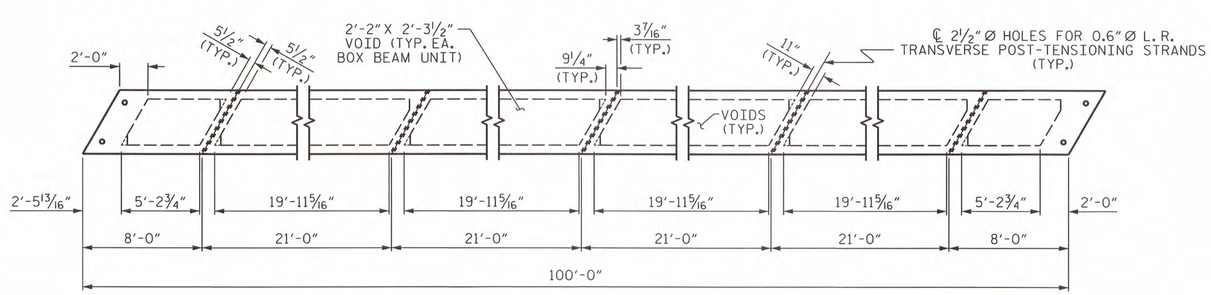

DIAPHRAGM AND VOID LAYOUT

PROJECT NO. BD-5109AD

ROWAN COUNTY

STATION: 13+41.00 -L-

SHEET 2 OF 4

STATE OF NORTH CAROLINA
DEPARTMENT OF TRANSPORTATION
RALEIGH

PLAN OF 100' UNIT
27'-6" CLEAR ROADWAY
120° SKEW

ASSEMBLED BY:	J. SMITH	DATE :	MAY 2014
DRAWN BY:	J. SMITH	DATE :	SEPT 2014
CHECKED BY:	J. DOUGHTY	DATE :	SEPT 2014
DESIGN ENGINEER OF RECORD:	J. DOUGHTY	DATE :	OCT 2014

DRAWN BY : DGE 10/11
CHECKED BY : TMG 11/11
REV. 8/14 MAA/TMG

PARSONS BRINCKERHOFF
434 FAYETTEVILLE STREET
SUITE 1500
RALEIGH, NC 27601
LICENSE NO. F-0165

NORTH CAROLINA PROFESSIONAL SEAL 032967 ENGINEER JASON R. DOUGHTY
11/11/14

REVISIONS						SHEET NO.
NO.	BY:	DATE:	NO.	BY:	DATE:	S-5
1			3			TOTAL SHEETS
2			4			17

STD.NO.39PCBB_30_120S_100L

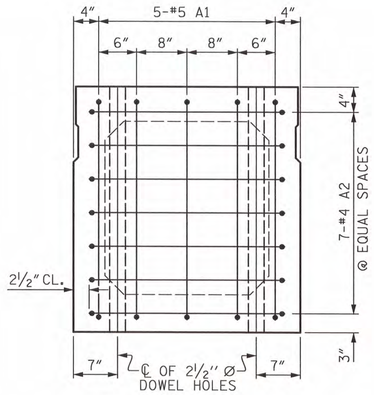

END ELEVATION

SHOWING PLACEMENT OF #5 & #4 "A" BARS AND LOCATION OF DOWEL HOLES. (INTERIOR BOX BEAM SECTION SHOWN-EXTERIOR SECTION SIMILAR EXCEPT SHEAR KEY LOCATION. STRAND LAYOUT NOT SHOWN.)

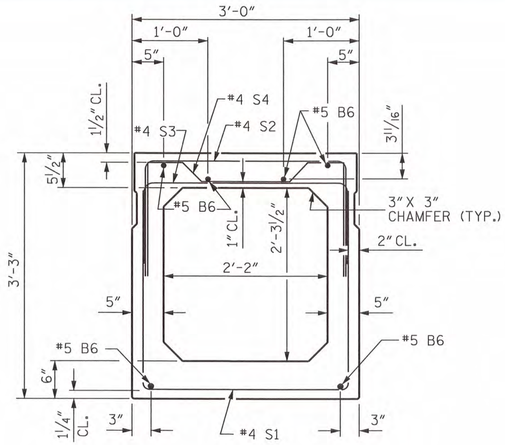

INTERIOR BOX BEAM SECTION

(STRAND LAYOUT NOT SHOWN)

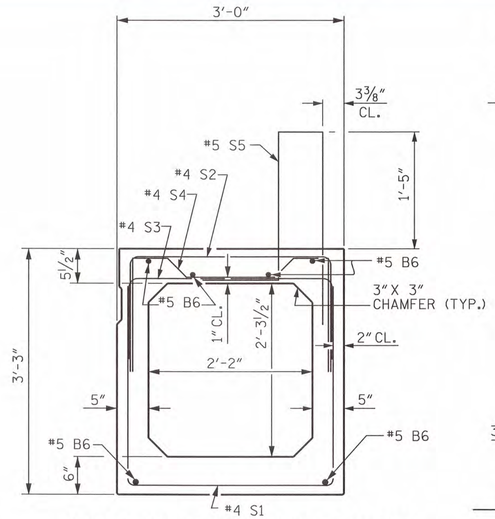

EXTERIOR BOX BEAM SECTION

(STRAND LAYOUT NOT SHOWN)

0.6" Ø LOW RELAXATION STRAND LAYOUT

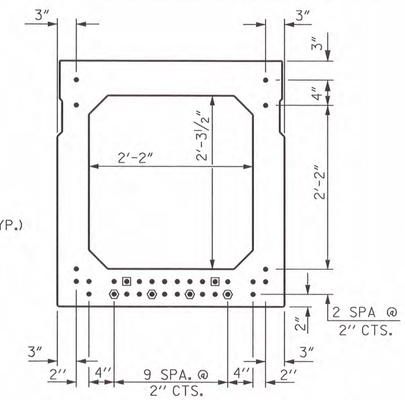

TYPICAL STRAND LOCATION

(32 STRANDS REQUIRED)

DEBONDING LEGEND

- ● FULLY BONDED STRANDS
- ▣ STRANDS DEBONDED FOR 4'-0" FROM END OF GIRDER
- ⬢ STRANDS DEBONDED FOR 12'-0" FROM END OF GIRDER

BOND SHALL BE BROKEN ON STRANDS AS SHOWN FOR THE SPECIFIED LENGTH FROM EACH END OF THE BOX BEAM. SEE STANDARD SPECIFICATIONS ARTICLE 1078-7.

BAR TYPES

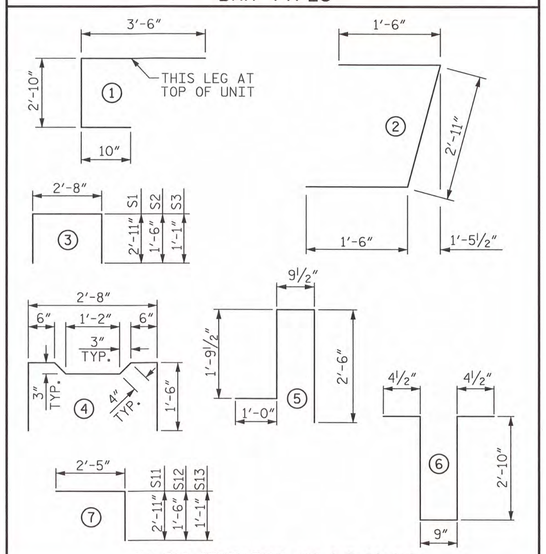

ALL BAR DIMENSIONS ARE OUT TO OUT

BILL OF MATERIAL FOR ONE BOX BEAM SECTION

				EXTERIOR UNIT		INTERIOR UNIT	
BAR	NUMBER	SIZE	TYPE	LENGTH	WEIGHT	LENGTH	WEIGHT
A1	10	#5	1	7'-2"	75	7'-2"	75
A2	44	#4	2	5'-11"	174	5'-11"	174
B6	12	#5	STR	50'-11"	637	50'-11"	637
K1	15	#4	6	7'-2"	72	7'-2"	72
K2	10	#4	STR	2'-10"	19	2'-10"	19
S1	77	#4	3	8'-6"	437	8'-6"	437
S2	77	#4	3	5'-8"	291	5'-8"	291
S3	135	#4	3	4'-10"	436	4'-10"	436
S4	58	#4	4	5'-10"	226	5'-10"	226
S11	32	#4	7	5'-4"	114	5'-4"	114
S12	32	#4	7	3'-11"	84	3'-11"	84
S13	32	#4	7	3'-6"	75	3'-6"	75
✳ S5	100	#5	5	6'-1"	634	--	--
REINFORCING STEEL				2640	LBS.	2640	LBS.
✳ EPOXY COATED REINF. STEEL				634	LBS.		
7500 P.S.I. CONCRETE				19.7	CU. YDS.	19.6	CU. YDS.
0.6" Ø L.R. STRANDS				No. 32		No. 32	

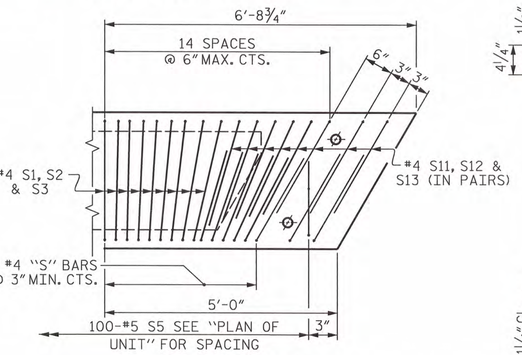

DETAIL "B"

EXTERIOR UNIT SHOWN, INTERIOR UNIT SIMILAR EXCEPT OMIT #5 S5 BARS. "B" BARS AND "A" BARS NOT SHOWN.

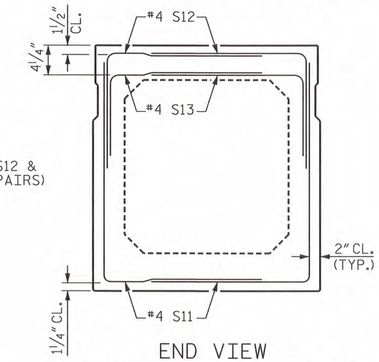

END VIEW

(SHOWING #4 "S" BARS IN END OF BEAM)

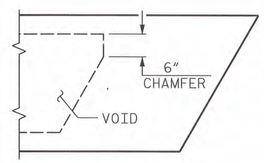

CHAMFER DETAIL

SHOWING 6" VOID CHAMFER

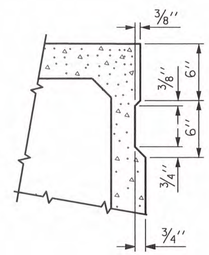

SHEAR KEY DETAIL

NOTE: OMIT SHEAR KEY ON OUTSIDE FACE OF EXTERIOR BOX BEAMS.

GRADE 270 STRANDS	
	0.6" Ø L.R.
AREA (SQUARE INCHES)	0.217
ULTIMATE STRENGTH (LBS. PER STRAND)	58,600
APPLIED PRESTRESS (LBS. PER STRAND)	43,950

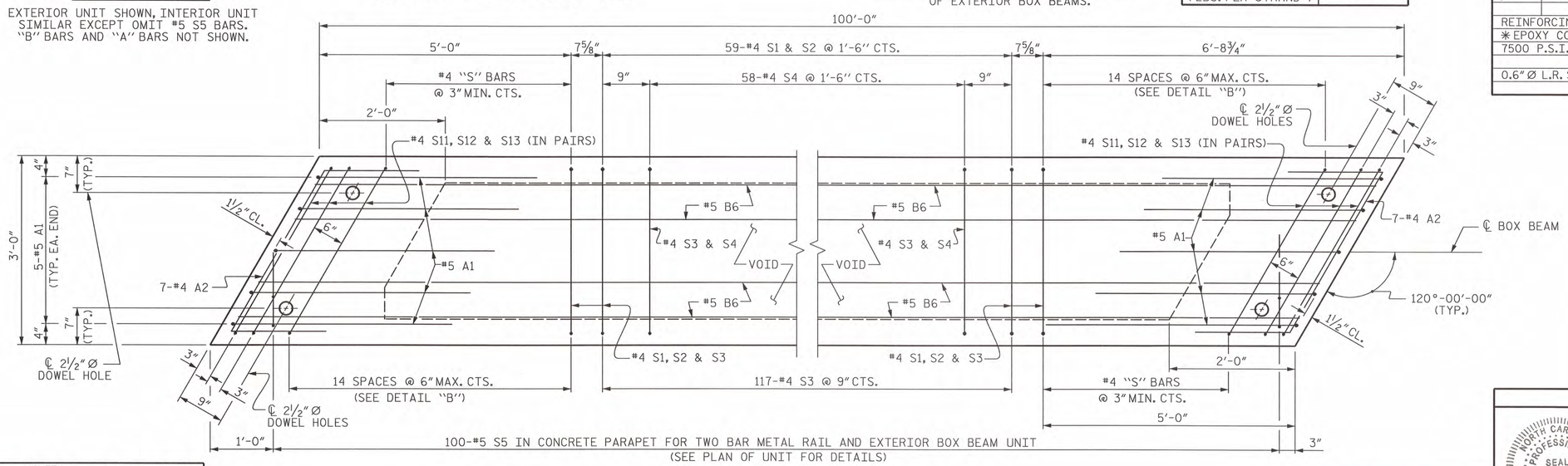

PLAN OF BOX BEAM

EXTERIOR UNIT SHOWN, INTERIOR UNIT SIMILAR EXCEPT OMIT #5 S5 BARS.
FOR LOCATION OF DIAPHRAGMS, SEE PLAN OF UNIT.
FOR REINFORCING STEEL IN DIAPHRAGMS, SEE DIAPHRAGM DETAILS.

PROJECT NO. BD-5109AD
ROWAN COUNTY
STATION: 13+41.00 -L-

SHEET 3 OF 4

STATE OF NORTH CAROLINA
DEPARTMENT OF TRANSPORTATION
RALEIGH

STANDARD

3'-0" X 3'-3"
PRESTRESSED CONCRETE
BOX BEAM UNIT

ASSEMBLED BY: J. SMITH	DATE: MAY 2014
DRAWN BY: J. SMITH	DATE: MAY 2014
CHECKED BY: J. DOUGHTY	DATE: SEPT 2014
DESIGN ENGINEER OF RECORD: J. DOUGHTY	DATE: OCT 2014
DRAWN BY: DGE 11/11	REV. 8/14 MAA/TMG
CHECKED BY: TMG 11/11	

PARSONS BRINCKERHOFF
434 FAYETTEVILLE STREET
SUITE 1500
RALEIGH, NC 27601
LICENSE NO. F-0165

NORTH CAROLINA PROFESSIONAL SEAL 032967 ENGINEER JASON A. DOUGHTY
11/11/14

REVISIONS						SHEET NO.
NO.	BY:	DATE:	NO.	BY:	DATE:	S-6
1			3			TOTAL SHEETS
2			4			17

STD. NO. 39PCBB6_120S_100L

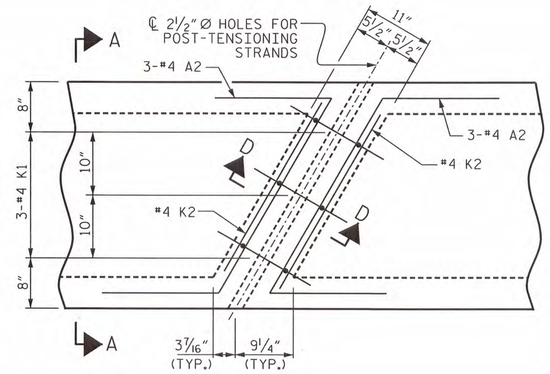

PLAN

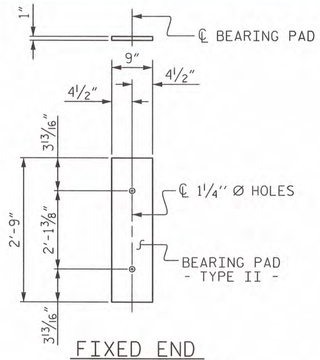

FIXED END

(TYPE II - 20 REQ'D)

ELASTOMERIC BEARING DETAILS

ELASTOMER IN ALL BEARINGS SHALL BE 60 DUROMETER HARDNESS.

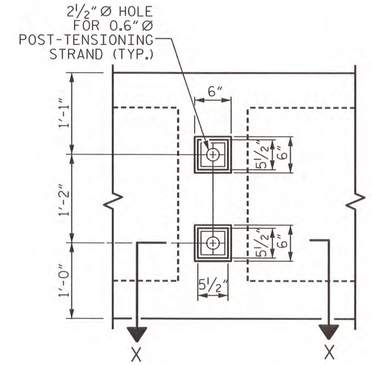

VIEW Y-Y

SHOWING ELEVATION VIEW OF GROUTED RECESS

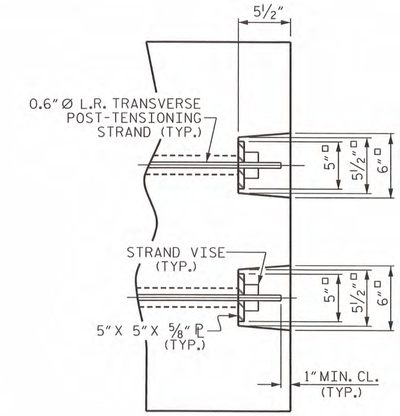

DETAIL "C"

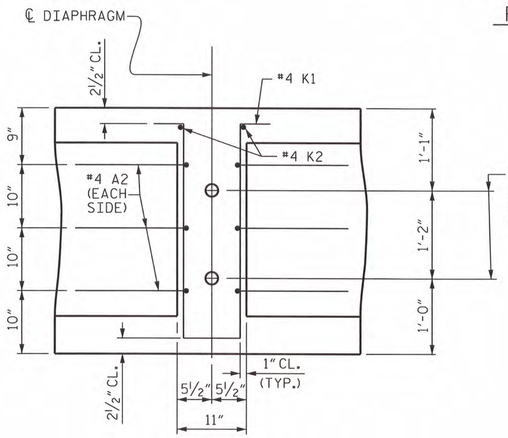

SECTION D-D

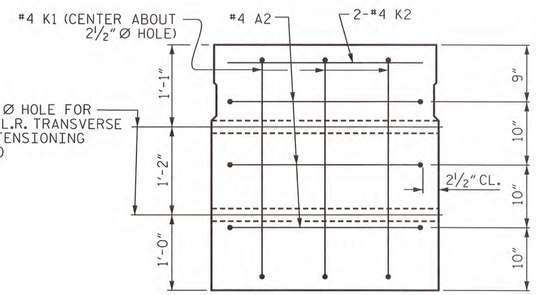

SECTION A-A

VOIDS NOT SHOWN

DOUBLE DIAPHRAGM DETAILS

#4 "S" BARS NOT SHOWN. #4 "S" BARS MAY BE SHIFTED SLIGHTLY TO CLEAR 2½" Ø HOLE.

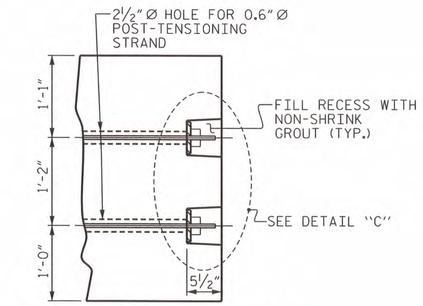

PART SECTION AT RECESS

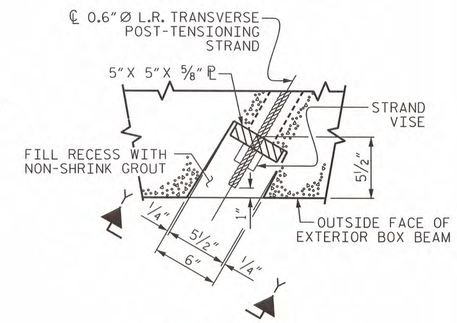

SECTION X-X

SHOWING PLAN VIEW OF GROUTED RECESS

GROUTED RECESS DETAIL AT END OF POST-TENSIONED STRANDS OF EXTERIOR BOX BEAM

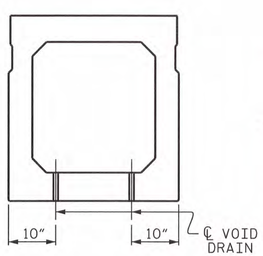

SECTION B-B

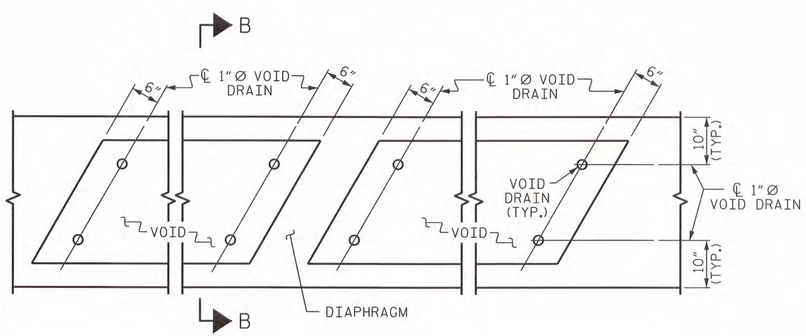

PART PLAN

VOID DRAIN DETAILS

(DIMENSIONS SHOWN ARE TYPICAL FOR EACH VOID)

BOX BEAM UNITS REQUIRED

	NUMBER	LENGTH	TOTAL LENGTH
EXTERIOR B.B.	2	100'-0"	200'-0"
INTERIOR B.B.	8	100'-0"	800'-0"
TOTAL	10	———	1000'-0"

DEAD LOAD DEFLECTION AND CAMBER

	3'-0" x 3'-3"
95' & 100' BOX BEAM UNIT (NC & SE)	0.6" Ø L.R. STRAND
CAMBER (SLAB ALONE IN PLACE)	2" ↑
DEFLECTION DUE TO SUPERIMPOSED DEAD LOAD**	⅞" ↓
FINAL CAMBER	1⅛" ↑

** INCLUDES FUTURE WEARING SURFACE

GUTTERLINE ASPHALT THICKNESS & PARAPET HEIGHT

	ASPHALT OVERLAY THICKNESS @ MID-SPAN	PARAPET HEIGHT @ MID-SPAN
100' UNITS	2⅜"	2'-8⅜" *

* MEASURED FROM TOP OF EXTERIOR BOX BEAM UNIT TO TOP OF PARAPET

PROJECT NO. BD-5109AD

ROWAN COUNTY

STATION: 13+41.00 -L-

SHEET 4 OF 4

STATE OF NORTH CAROLINA
DEPARTMENT OF TRANSPORTATION
RALEIGH

STANDARD

3'-0" X 3'-3" PRESTRESSED CONCRETE BOX BEAM UNIT

NORTH CAROLINA PROFESSIONAL SEAL 032967 ENGINEER JASON B. DOUGHTY

11/11/14

PARSONS BRINCKERHOFF
434 FAYETTEVILLE STREET
SUITE 1500
RALEIGH, NC 27601
LICENSE NO. F-0165

REVISIONS						SHEET NO.
NO.	BY:	DATE:	NO.	BY:	DATE:	S-7
1			3			TOTAL SHEETS
2			4			17

ASSEMBLED BY: J. SMITH DATE: MAY 2014
DRAWN BY: J. SMITH DATE: SEPT 2014
CHECKED BY: J. DOUGHTY DATE: SEPT 2014
DESIGN ENGINEER OF RECORD: J. DOUGHTY DATE: OCT 2014

DRAWN BY: DGE 11/11 REV. 8/14 MAA/TMG
CHECKED BY: TMG 11/11

STD.NO.39PCBB7_120S

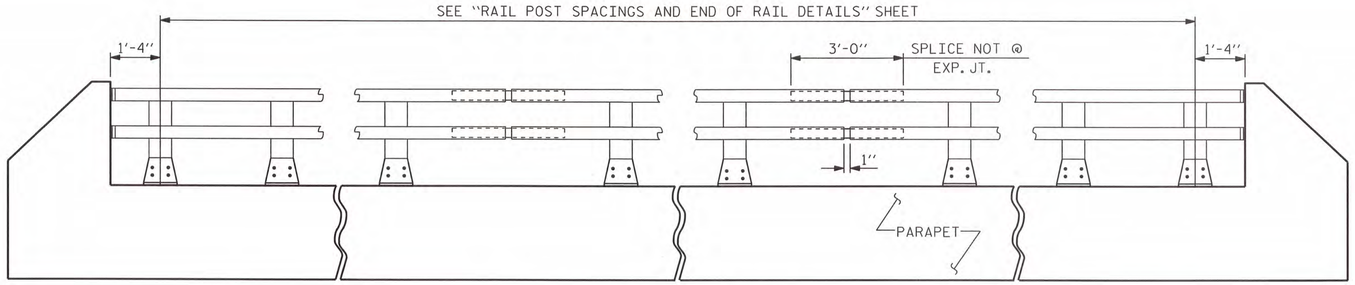

ELEVATION

NOTE:
FOR ATTACHMENT OF METAL RAIL TO END POST,
SEE "RAIL POST SPACINGS AND END OF RAIL DETAILS" SHEET.

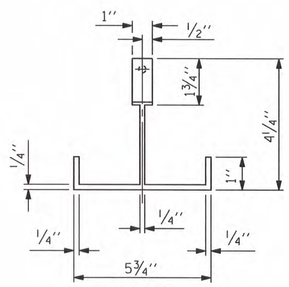

PLAN

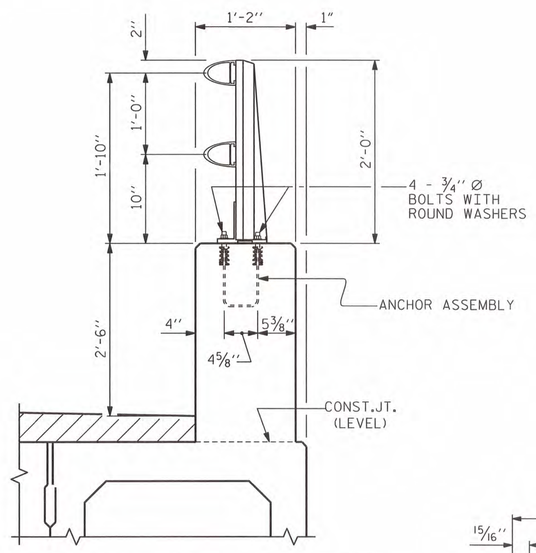

SECTION THRU PARAPET AND RAIL

DRAIN BLOCKOUT NOT SHOWN FOR CLARITY

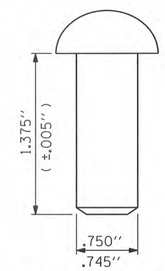

RIVET DETAIL

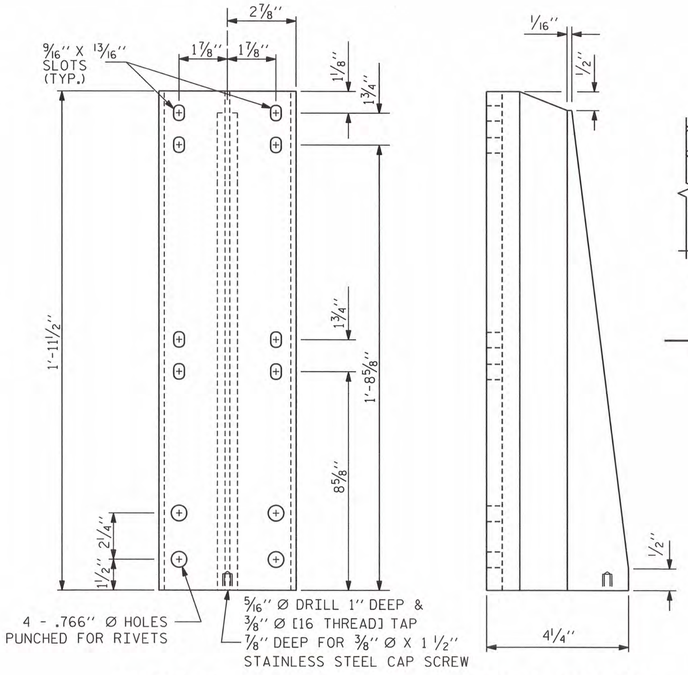

FRONT ELEVATION SIDE ELEVATION

DETAILS OF POST

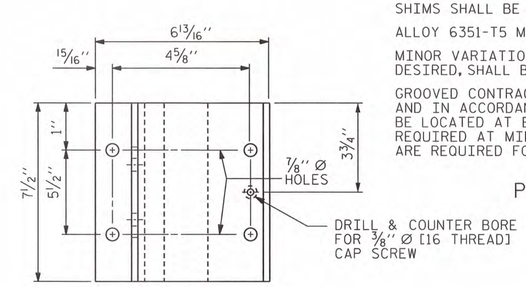

PLAN

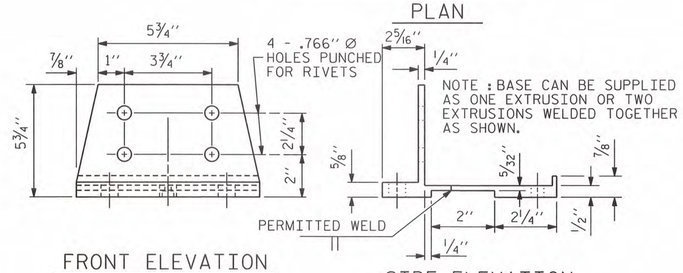

FRONT ELEVATION SIDE ELEVATION

POST BASE DETAILS

NOTES

AT THE CONTRACTOR'S OPTION, METAL RAIL MAY BE EITHER ALUMINUM OR GALVANIZED STEEL IN ACCORDANCE WITH THE REQUIREMENTS OF THE GENERAL NOTES AND THE FOLLOWING SPECIFICATIONS FOR THE ALTERNATE MATERIALS; HOWEVER, THE CONTRACTOR WILL BE REQUIRED TO USE THE SAME RAIL MATERIAL ON ALL STRUCTURES ON THE PROJECT FOR WHICH METAL RAIL IS DESIGNATED.

UNLESS OTHERWISE REQUIRED IN THE CONTRACT DOCUMENTS, THE CONTRACTOR HAS THE OPTION TO USE AN ALTERNATE TO THE 2 BAR METAL RAIL. THE ALTERNATE RAIL SHALL MEET THE REQUIREMENTS OF THE AASHTO LRFDBRIDGE DESIGN SPECIFICATIONS AND MUST BE LISTED ON THE DEPARTMENT'S APPROVED PRODUCTS LIST (APL) UNDER "2 BAR METAL RAIL ALTERNATE". ADJUSTMENTS TO THE CONCRETE PARAPET WILL NOT BE ALLOWED.

ALUMINUM RAILS

MATERIAL FOR POSTS, BASES AND RAILS, EXPANSION BARS AND CLAMP BARS SHALL BE ASTM B-221 ALLOY 6061-T6.

MATERIAL FOR RIVETS SHALL BE ASTM B316 ALLOY 6061-T6. RIVETS SHALL BE STANDARD BUTTON HEAD AND CONE POINT COLD DRIVEN AS PER DRAWING.

THE BASE OF RAIL POSTS, OR ANY OTHER ALUMINUM SURFACE IN CONTACT WITH CONCRETE SHALL BE THOROUGHLY COATED WITH AN ALUMINUM IMPREGNATED CAULKING COMPOUND OF APPROVED QUALITY.

MATERIAL FOR SHIMS TO BE ASTM B209 ALLOY 6061-T6.

GALVANIZED STEEL RAILS

MATERIAL AND GALVANIZING ARE TO CONFORM TO THE FOLLOWING SPECIFICATIONS:

POST, POST BASES, RAILS, EXPANSION BARS AND CLAMP BARS: AASHTO M270 GRADE 36 STRUCTURAL STEEL - GALVANIZED TO AASHTO M111.

RIVETS: RIVETS SHALL MEET THE REQUIREMENTS OF ASTM A502 FOR GRADE 1 RIVETS.

THE CUT ENDS OF GALVANIZED STEEL RAILING, AFTER GRINDING SMOOTH SHALL BE GIVEN TWO COATS OF ZINC RICH PAINT MEETING THE REQUIREMENTS OF FEDERAL SPECIFICATION MIL-P-26915 USAF TYPE 1, OR OF FEDERAL SPECIFICATIONS TT-P-641.

SHIMS: SHIMS SHALL MEET THE REQUIREMENTS OF ASTM A570 FOR GRADE 33 OR A611 FOR GRADE C AND SHALL BE GALVANIZED IN ACCORDANCE WITH AASHTO M111.

RAIL CAPS: RAIL CAPS SHALL MEET THE REQUIREMENTS OF ASTM A570 FOR GRADE 33 OR A611 FOR GRADE C AND SHALL BE GALVANIZED IN ACCORDANCE WITH AASHTO M111.

GENERAL NOTES

RAILING SHALL BE CONTINUOUS FROM END POST TO END POST OF BRIDGE. EACH JOINT IN RAIL LENGTH SHALL BE SPLICED AS DETAILED. PANEL LENGTHS OF RAIL SHALL BE ATTACHED TO A MINIMUM OF THREE POSTS.

FOR END OF RAIL TO CLEAR FACE OF CONCRETE END POST DIMENSION, SEE "RAIL POST SPACING AND END OF RAIL DETAILS" SHEET.

CAP SCREWS SHALL BE ASTM F593 ALLOY 305 STAINLESS STEEL. WASHERS SHALL MEET THE REQUIREMENTS OF ASTM F844 EXCEPT THEY SHALL BE MADE FROM ALLOY 304 STAINLESS STEEL.

CERTIFIED MILL REPORTS ARE REQUIRED FOR RAILS AND POSTS. SHOP INSPECTION IS NOT REQUIRED.

METAL RAIL POSTS SHALL BE SET NORMAL TO CURB GRADE.

METHOD OF MEASUREMENT FOR METAL RAILS: FOR LENGTH OF METAL RAILS TO BE PAID FOR, SEE THE STANDARD SPECIFICATIONS.

CURVED RAIL USAGE: WHERE RAILS ARE TO BE USED ON BRIDGES ON HORIZONTAL AND/OR VERTICAL CURVATURE THE CONTRACTOR MAY, AT HIS OPTION, HAVE THE REQUIRED CURVATURE IN THE RAIL FORMED IN THE SHOP OR IN THE FIELD. IN EITHER EVENT, THE RAIL SHALL CONFORM WITHOUT BUCKLING OR KINKING TO THE REQUIRED CURVATURE IN A UNIFORM MANNER ACCEPTABLE TO THE ENGINEER.

TO INSURE FUTURE IDENTIFICATION OF THE FABRICATOR, A PERMANENT IDENTIFYING MARK SHALL BE PLACED ON EACH POST. THE METHOD OF MARKING AND LOCATION SHALL BE SUCH THAT IT DOES NOT DETRACT FROM THE APPEARANCE OF THE POST, BUT REMAINS VISIBLE AFTER RAIL PLACEMENT.

SHIMS SHALL BE USED AS NECESSARY FOR POST ALIGNMENT.

ALLOY 6351-T5 MAY BE SUBSTITUTED FOR ALLOY 6061-T6 WHERE APPLICABLE.

MINOR VARIATIONS IN DETAILS OF METAL RAIL WILL BE CONSIDERED. DETAILS OF SUCH VARIATIONS, IF DESIRED, SHALL BE SUBMITTED FOR APPROVAL.

GROOVED CONTRACTION JOINTS, 1/2" IN DEPTH, SHALL BE TOOLED IN ALL EXPOSED FACES OF THE PARAPET AND IN ACCORDANCE WITH ARTICLE 825-10(B) OF THE STANDARD SPECIFICATIONS. A CONTRACTION JOINT SHALL BE LOCATED AT EACH THIRD POINT BETWEEN PARAPET EXPANSION JOINTS. ONLY ONE CONTRACTION JOINT IS REQUIRED AT MIDPOINT OF PARAPET SEGMENTS LESS THAN 20 FEET IN LENGTH AND NO CONTRACTION JOINTS ARE REQUIRED FOR THOSE SEGMENTS LESS THAN 10 FEET IN LENGTH.

PAY LENGTH = 183.55 LIN. FT.

PROJECT NO. BD-5109AD
ROWAN COUNTY
STATION: 13+41.00 -L-

SHEET 1 OF 4

STATE OF NORTH CAROLINA
DEPARTMENT OF TRANSPORTATION
RALEIGH

STANDARD

2 BAR METAL RAIL

DESIGNED BY:	J. SMITH	DATE :	SEPT 2014		
DRAWN BY:	K. WHITE	DATE :	SEPT 2014		
CHECKED BY:	J. DOUGHTY	DATE :	SEPT 2014		
DESIGN ENGINEER OF RECORD:	J. DOUGHTY	DATE :	OCT 2014		

DRAWN BY :	EEM	6/94	REV. 5/1/06	TLA/GM	
CHECKED BY :	RGW	6/94	REV. 10/1/11	MAA/GM	
			REV. 6/13	MAA/GM	

PARSONS BRINCKERHOFF
434 FAYETTEVILLE STREET
SUITE 1500
RALEIGH, NC 27601
LICENSE NO. F-0165

NORTH CAROLINA PROFESSIONAL SEAL 032967 ENGINEER JASON R. DOUGHTY
11/11/14

REVISIONS						SHEET NO.
NO.	BY:	DATE:	NO.	BY:	DATE:	S-8
1			3			TOTAL SHEETS
2			4			17

STD. NO. BMR3

11/6/2014
BD-5109AD_SD_2WR_08.dgn

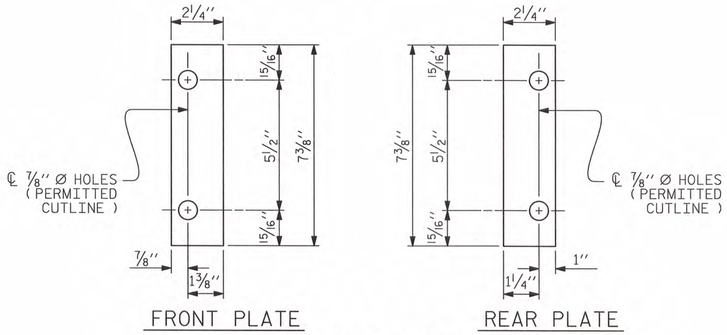

SHIM DETAILS

NOTE :
SHIMS MAY BE CUT ALONG PERMITTED CUTLINE OR SLOTTED TO EDGE OF PLATE TO FACILITATE PLACEMENT.

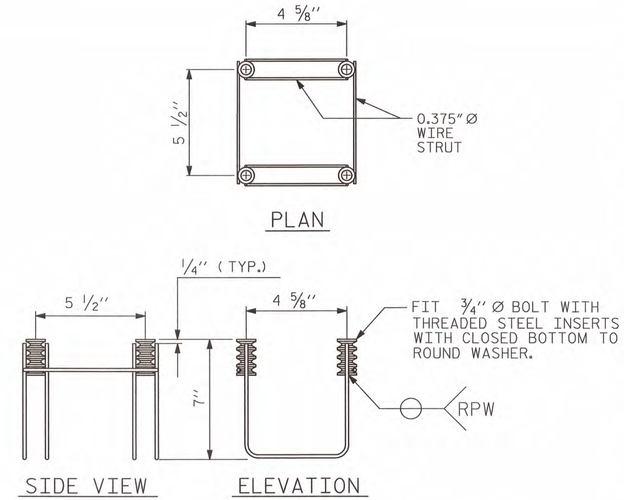

4-BOLT METAL RAIL ANCHOR ASSEMBLY

(34 ASSEMBLIES REQUIRED)

NOTES

STRUCTURAL CONCRETE ANCHOR ASSEMBLY

THE STRUCTURAL CONCRETE ANCHOR ASSEMBLY SHALL CONSIST OF THE FOLLOWING COMPONENTS :

A. FERRULES SHALL BE MADE FROM STEEL MEETING THE REQUIREMENTS OF AASHTO M169, GRADE 12L14 AND SHALL HAVE A MINIMUM LENGTH OF THREADS OF 2" FOR 3/4" FERRULES.

B. 4 - 3/4" Ø X 2 1/2" BOLTS WITH WASHERS. BOLTS SHALL CONFORM TO THE REQUIREMENTS OF ASTM A307. BOLTS AND WASHERS SHALL BE GALVANIZED. AT THE CONTRACTOR'S OPTION, STAINLESS STEEL BOLTS AND WASHERS MAY BE USED AS AN ALTERNATE FOR THE 3/4" Ø X 2 1/2" GALVANIZED BOLTS AND WASHERS. THEY SHALL CONFORM TO OR EXCEED THE MECHANICAL REQUIREMENTS OF ASTM A307. THE USE OF THIS ALTERNATE SHALL BE APPROVED BY THE ENGINEER.

C. WIRE STRUT SHOWN IN THE CONCRETE ANCHOR ASSEMBLY DETAIL IS THE MINIMUM ALLOWABLE SIZE AND SHALL HAVE A MINIMUM TENSILE STRENGTH OF 100,000 PSI. AS AN OPTION, A 7/16" Ø WIRE STRUT WITH A MINIMUM TENSILE STRENGTH OF 90,000 PSI IS ACCEPTABLE.

D. THE METAL RAIL ANCHOR ASSEMBLIES TO BE HOT DIPPED GALVANIZED TO CONFORM TO REQUIREMENTS OF AASHTO M111.

E. THE COST OF THE METAL RAIL ANCHOR ASSEMBLY WITH BOLTS AND WASHERS COMPLETE IN PLACE SHALL BE INCLUDED IN THE PRICE BID FOR LINEAR FEET OF METAL RAIL.

F. BOLTS TO BE TIGHTENED ONE-HALF TURN WITH A WRENCH FROM A FINGER-TIGHT POSITION.

THE CONTRACTOR MAY USE ADHESIVELY ANCHORED ANCHOR BOLTS IN PLACE OF THE METAL RAIL ANCHOR ASSEMBLY. LEVEL ONE FIELD TESTING IS REQUIRED, AND THE YIELD LOAD OF THE 3/4" Ø BOLT IS 10 KIPS. FOR ADHESIVELY ANCHORED ANCHOR BOLTS OR DOWELS, SEE THE STANDARD SPECIFICATIONS.

WHEN ADHESIVELY ANCHORED ANCHOR BOLTS ARE USED, BOLTS SHALL MEET THE REQUIREMENTS OF ASTM F593 ALLOY 304 STAINLESS STEEL WITH MINIMUM 75,000 PSI ULTIMATE STRENGTH. NUTS SHALL MEET THE REQUIREMENTS OF ASTM F594 ALLOY 304 STAINLESS STEEL AND WASHERS SHALL MEET THE REQUIREMENTS OF ASTM F844 EXCEPT THEY SHALL BE MADE FROM ALLOY 304 STAINLESS STEEL.

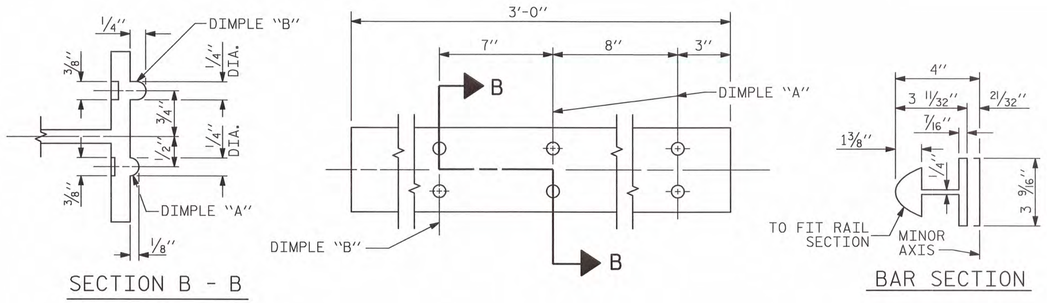

EXPANSION BAR DETAILS

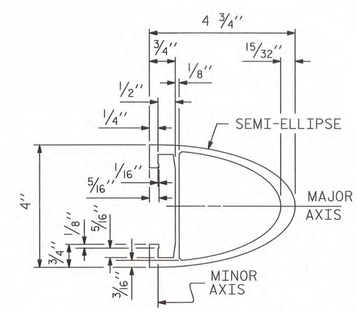

RAIL SECTION

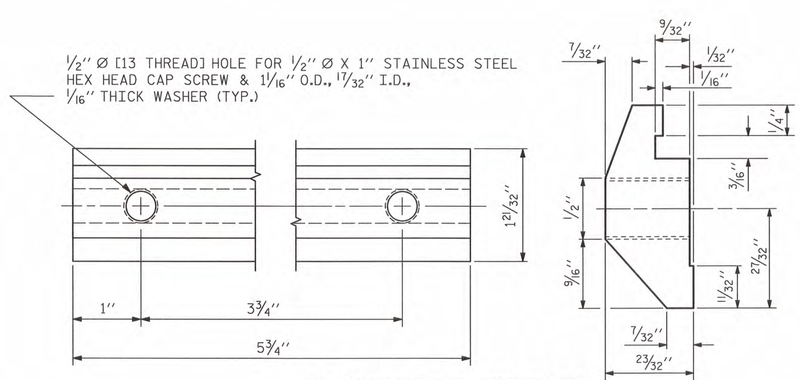

CLAMP BAR DETAIL

(4 REQUIRED PER POST)

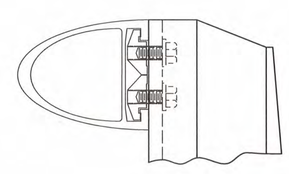

CLAMP ASSEMBLY

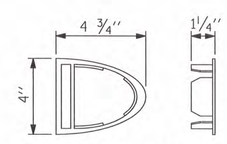

RAIL CAP

PROJECT NO. BD-5109AD
ROWAN COUNTY
STATION: 13+41.00 -L-

SHEET 2 OF 4

STATE OF NORTH CAROLINA
DEPARTMENT OF TRANSPORTATION
RALEIGH

STANDARD

2 BAR METAL RAIL

DESIGNED BY:	J. SMITH	DATE :	SEPT 2014
DRAWN BY:	K. WHITE	DATE :	SEPT 2014
CHECKED BY:	J. DOUGHTY	DATE :	SEPT 2014
DESIGN ENGINEER OF RECORD:	J. DOUGHTY	DATE :	OCT 2014

DRAWN BY :	EEM	6/94
CHECKED BY :	RGW	6/94

REV.	8/16/99	MAB/LES
REV.	5/1/06R	KMM/GM
REV.	10/1/11	MAA/GM

PARSONS BRINCKERHOFF
434 FAYETTEVILLE STREET
SUITE 1500
RALEIGH, NC 27601
LICENSE NO. F-0165

NORTH CAROLINA PROFESSIONAL SEAL 032967 ENGINEER JASON B. DOUGHTY
11/14/14

REVISIONS								SHEET NO.
NO.	BY:	DATE:	NO.	BY:	DATE:			S-9
1			3					TOTAL SHEETS
2			4					17

STD. NO. BMR4

10/30/2014
BD-5109AD_SD_2MR_09.dgn

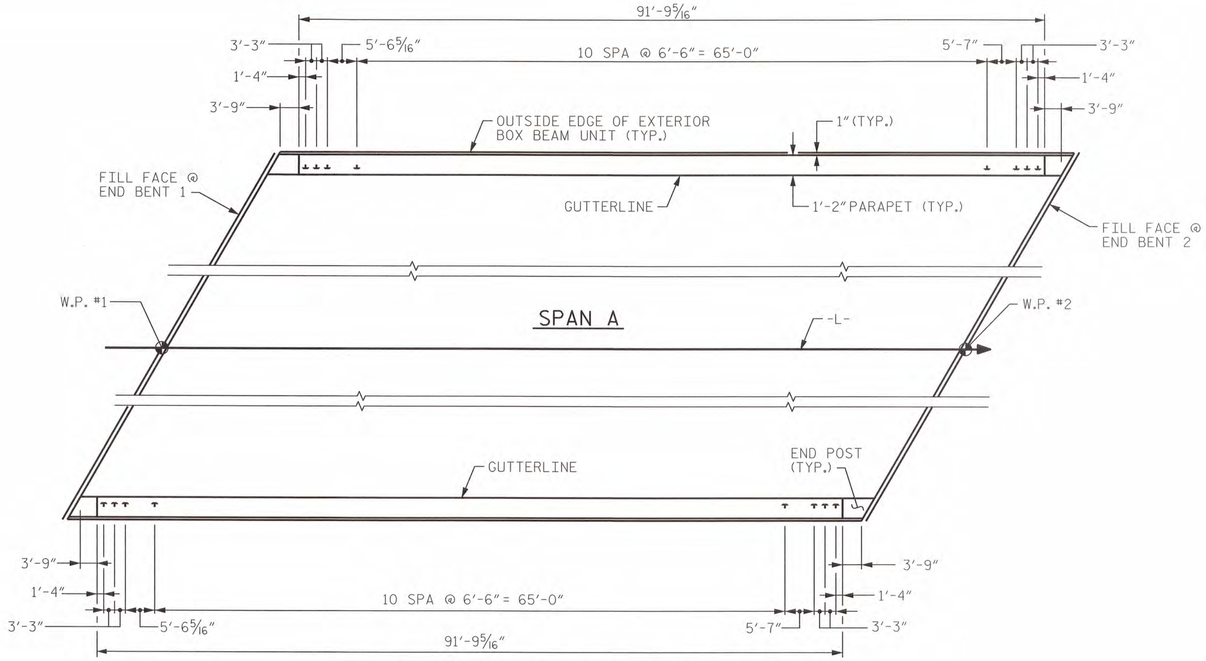

PLAN OF RAIL POST SPACINGS

NOTES

STRUCTURAL CONCRETE INSERT

THE STRUCTURAL CONCRETE INSERT ASSEMBLY SHALL CONSIST OF THE FOLLOWING COMPONENTS:

A. FERRULES SHALL BE MADE FROM STEEL MEETING THE REQUIREMENTS OF AASHTO M169, GRADE 12L14 AND SHALL HAVE A MINIMUM LENGTH OF THREADS OF 1 1/2".

B. 1 - 3/4" Ø X 1 5/8" BOLT WITH WASHER. BOLT SHALL CONFORM TO THE REQUIREMENTS OF ASTM A307. BOLT AND WASHER SHALL BE GALVANIZED. (AT THE CONTRACTOR'S OPTION, STAINLESS STEEL BOLT AND WASHER MAY BE USED AS AN ALTERNATE FOR THE 3/4" Ø X 1 5/8" GALVANIZED BOLT AND WASHER. THEY SHALL CONFORM TO OR EXCEED THE MECHANICAL REQUIREMENTS OF ASTM A307. THE USE OF THIS ALTERNATE SHALL BE APPROVED BY THE ENGINEER.)

C. WIRE STRUT SHOWN IN THE CONCRETE INSERT ASSEMBLY DETAIL IS THE MINIMUM ALLOWABLE SIZE AND SHALL HAVE A MINIMUM TENSILE STRENGTH OF 100,000 PSI. AS AN OPTION, A 7/16" Ø WIRE STRUT WITH A MINIMUM TENSILE STRENGTH OF 90,000 PSI IS ACCEPTABLE.

NOTES

METAL RAIL TO END POST CONNECTION

THE METAL RAIL TO END POST CONNECTION SHALL CONSIST OF THE FOLLOWING COMPONENTS:

A. 1/2" PLATES SHALL CONFORM TO AASHTO M270 GRADE 36 AND SHALL BE GALVANIZED AFTER FABRICATION.

B. 3/4" STRUCTURAL CONCRETE INSERT SHALL HAVE A WORKING LOAD SHEAR CAPACITY OF 4800 LBS. THE FERRULES SHALL ENGAGE A 3/4"Ø X 1 5/8" BOLT WITH 2" O.D. WASHER IN PLACE. THE 3/4"Ø X 1 5/8" BOLT SHALL HAVE N. C. THREADS.

C. CAP SCREWS FOR RAIL ATTACHMENT TO ANGLE SHALL CONFORM TO THE REQUIREMENTS OF ASTM F593 ALLOY 305 STAINLESS STEEL. CAP SCREWS TO BE CENTERED IN SLOTS AT 60°F.

D. STANDARD CLAMP BARS (SEE METAL RAIL SHEET).

E. 1/2" Ø PIPE SLEEVES (IF REQUIRED) TO BE GALVANIZED.

THE COST OF THE STANDARD CLAMP BARS AND CAP SCREWS USED IN THE METAL RAIL TO END POST CONNECTION SHALL BE INCLUDED IN THE UNIT CONTRACT PRICE BID FOR LINEAR FEET OF 1 OR 2 BAR METAL RAILS.

THE 3/4" STRUCTURAL CONCRETE INSERT WITH BOLT SHALL BE ASSEMBLED IN THE SHOP.

THE COST OF THE 3/4" STRUCTURAL CONCRETE INSERT ASSEMBLY, AND THE 1/2" PLATES COMPLETE IN PLACE SHALL BE INCLUDED IN THE VARIOUS PAY ITEMS.

THE CONTRACTOR, AT HIS OPTION, MAY USE AN ADHESIVE BONDING SYSTEM IN LIEU OF THE STRUCTURAL CONCRETE INSERT EMBEDDED IN THE END POST. IF THE ADHESIVE BONDING SYSTEM IS USED, THE 3/4" Ø X 1 5/8" BOLT WITH WASHER SHALL BE REPLACED WITH A 3/4"Ø X 6 1/2" BOLT AND 2" O.D. WASHER. ALL SPECIFICATIONS THAT APPLY TO THE 3/4" Ø X 1 5/8" BOLT SHALL APPLY TO THE 3/4"Ø X 6 1/2" BOLT. FIELD TESTING OF THE ADHESIVE BONDING SYSTEM IS NOT REQUIRED.

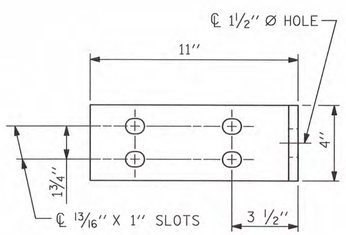

ELEVATION

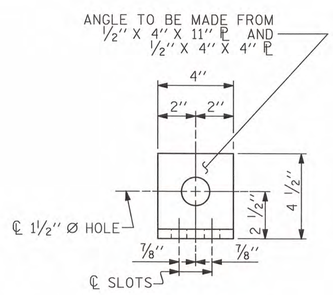

END VIEW

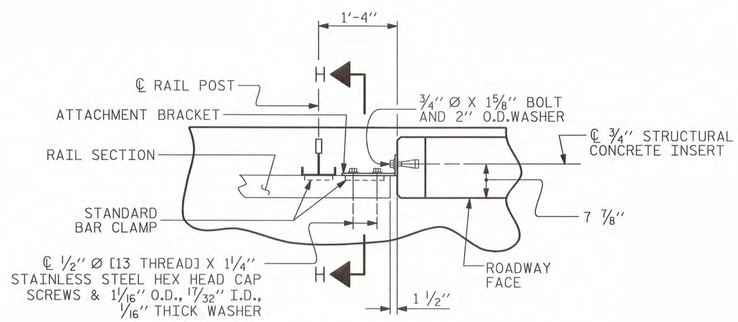

PLAN - RAIL AND END POST

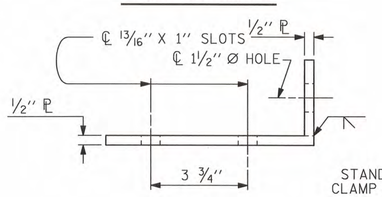

TOP VIEW

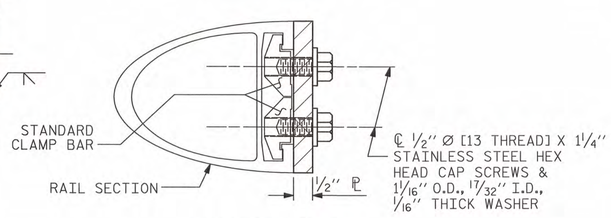

SECTION H-H

FIXED

DETAILS FOR ATTACHING METAL RAIL TO END POST

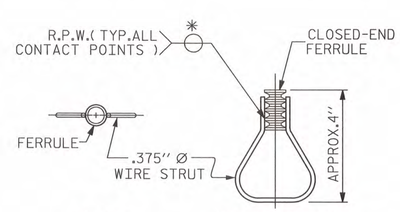

PLAN ELEVATION

STRUCTURAL CONCRETE INSERT

* EACH WELDED ATTACHMENT OF WIRE TO FERRULE SHALL DEVELOP THE TENSILE STRENGTH OF THE WIRE.

PROJECT NO. BD-5109AD

ROWAN COUNTY

STATION: 13+41.00 -L-

SHEET 3 OF 4

STATE OF NORTH CAROLINA
DEPARTMENT OF TRANSPORTATION
RALEIGH

STANDARD

RAIL POST SPACINGS AND END OF RAIL DETAILS

DESIGNED BY: J. SMITH	DATE : SEPT 2014		
DRAWN BY: K. WHITE	DATE : SEPT 2014		
CHECKED BY: J. DOUGHTY	DATE : SEPT 2014		
DESIGN ENGINEER OF RECORD: J. DOUGHTY	DATE : OCT 2014		

DRAWN BY : FCJ 1/88	REV. 5/7/03	RWW/JTE
CHECKED BY : CRK 3/89	REV. 5/1/06	TLA/GM
	REV. 10/1/11	MAA/GM

PARSONS BRINCKERHOFF
434 FAYETTEVILLE STREET
SUITE 1500
RALEIGH, NC 27601
LICENSE NO. F-0165

NORTH CAROLINA PROFESSIONAL SEAL 032967 ENGINEER JASON R. DOUGHTY
11/11/14

REVISIONS								
NO.	BY:	DATE:	NO.	BY:	DATE:	SHEET NO.	TOTAL SHEETS
1			3			S-10	17
2			4				

STD. NO. BMR2

10/30/2014
BD-5109AD_SD_2MR_10.dgn

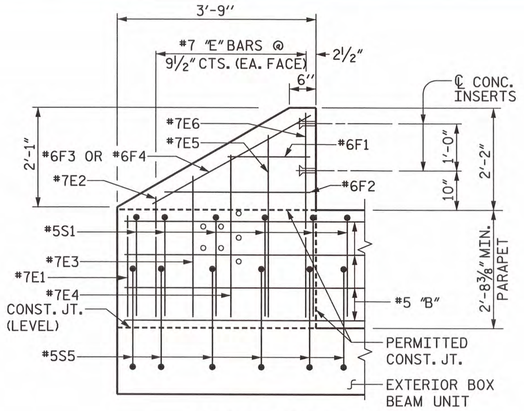

ELEVATION

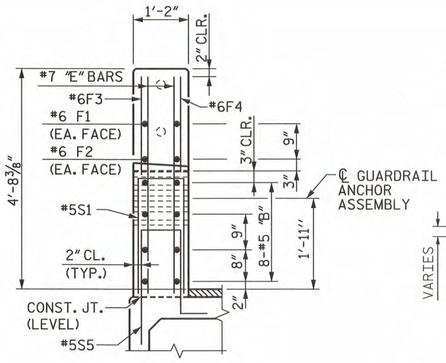

END VIEW

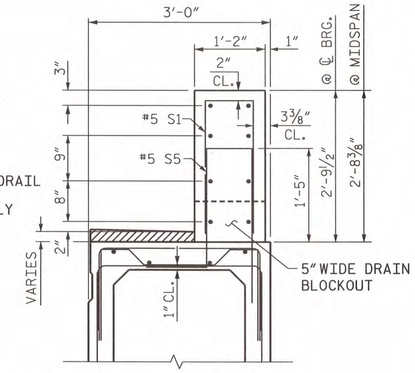

SECTION THRU PARAPET

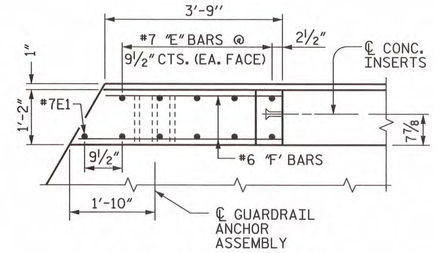

PLAN OF END POST

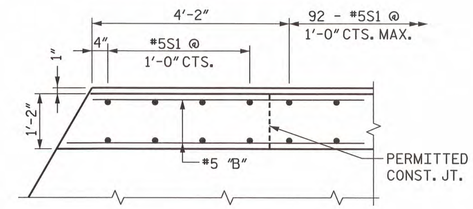

PLAN OF PARAPET

PARAPET AND END POST FOR TWO BAR METAL RAIL

BAR TYPE

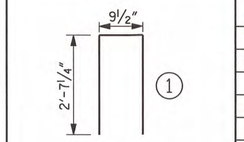

BAR DIMENSIONS ARE OUT TO OUT

BILL OF MATERIAL

BAR	NO.	SIZE	TYPE	LENGTH	WEIGHT (LBS)
✱B1	64	#5	STR	9'-8"	645
✱B2	48	#5	STR	22'-8"	1135
✱E1	4	#7	STR	2'-2"	18
✱E2	8	#7	STR	2'-9"	45
✱E3	8	#7	STR	3'-2"	52
✱E4	8	#7	STR	3'-7"	59
✱E5	8	#7	STR	4'-0"	65
✱E6	8	#7	STR	4'-6"	74
✱F1	8	#6	STR	2'-0"	24
✱F2	8	#6	STR	3'-3"	39
✱F3	4	#6	STR	3'-7"	22
✱F4	4	#6	STR	3'-10"	23
✱S1	200	#5	1	6'-0"	1252

✱EPOXY COATED REINF. STEEL 3453 LBS.
CLASS AA CONCRETE 24.2 CU. YDS.
1'-2" x 2'-9½" CONC. PARAPET 200.00 LIN.FT.

NOTES

ALL REINFORCING STEEL IN PARAPETS AND END POST SHALL BE EPOXY COATED.

FOR DETAIL OF CONCRETE INSERT, SEE "RAIL POST SPACINGS AND END OF RAIL DETAILS" SHEET.

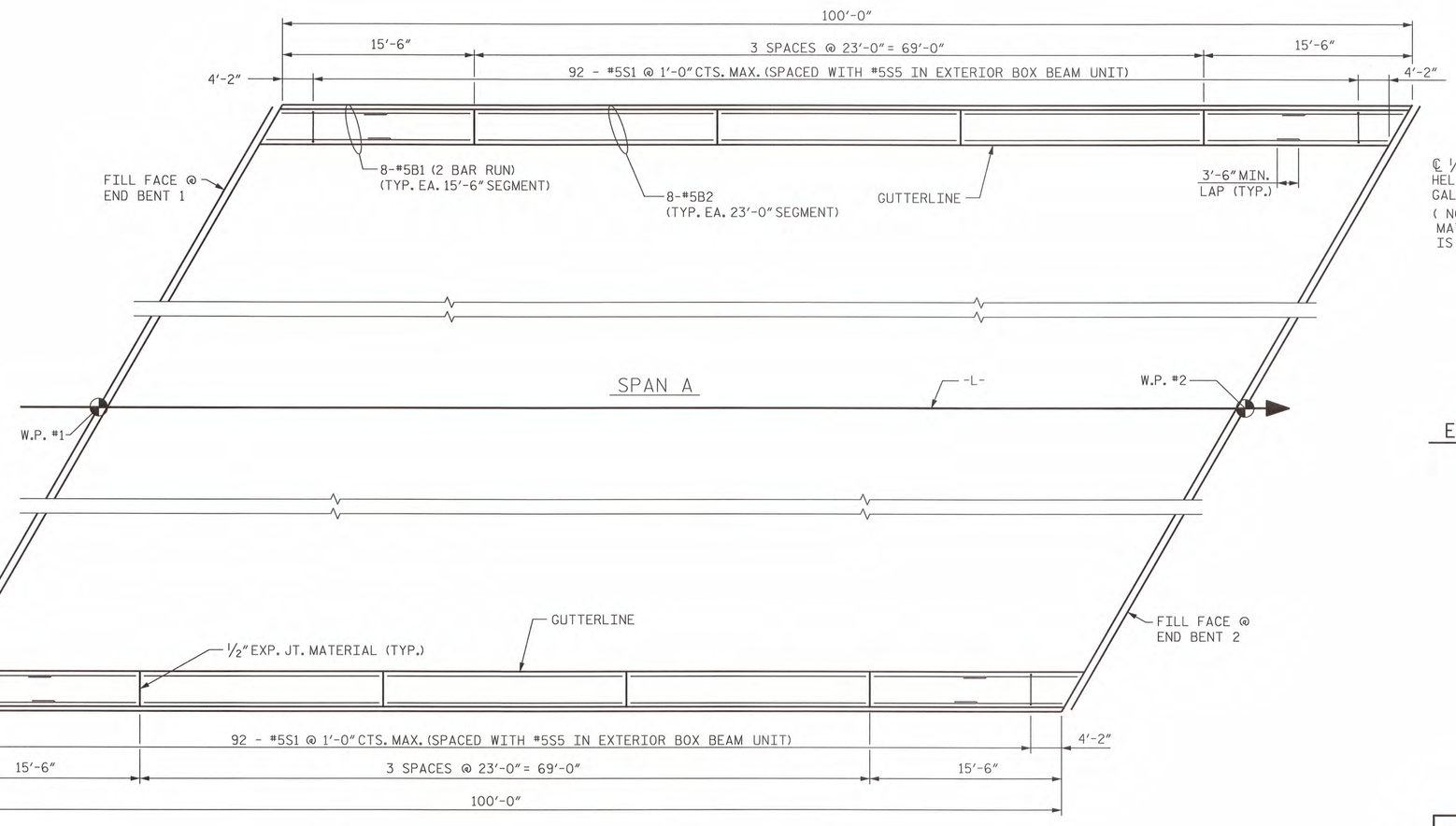

PLAN

FOR DRAIN LAYOUT, SEE "PLAN OF UNIT" ON SHEET NO. S-5.

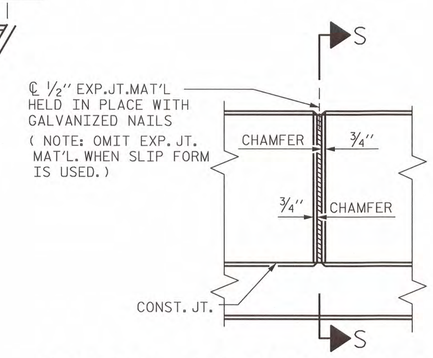

ELEVATION AT EXPANSION JOINTS

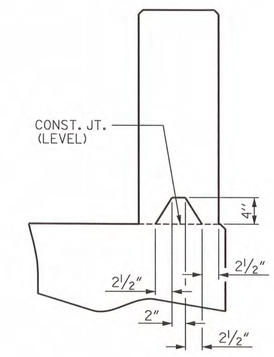

SECTION S-S
AT DAM IN OPEN JOINT
(THIS IS TO BE USED ONLY WHEN SLIP FORM IS USED)

PROJECT NO. BD-5109AD
ROWAN COUNTY
STATION: 13+41.00 -L-

SHEET 4 OF 4

STATE OF NORTH CAROLINA
DEPARTMENT OF TRANSPORTATION
RALEIGH

SUPERSTRUCTURE

CONCRETE PARAPET FOR TWO BAR METAL RAIL

DESIGNED BY:	J. SMITH	DATE :	SEPT 2014
DRAWN BY:	K. WHITE	DATE :	SEPT 2014
CHECKED BY:	J. DOUGHTY	DATE :	SEPT 2014
DESIGN ENGINEER OF RECORD:	J. DOUGHTY	DATE :	OCT 2014

PARSONS BRINCKERHOFF
434 FAYETTEVILLE STREET
SUITE 1500
RALEIGH, NC 27601
LICENSE NO. F-0165

NORTH CAROLINA PROFESSIONAL SEAL 032967 ENGINEER JOHN R. DOUGHTY
11/11/14

REVISIONS							
NO.	BY:	DATE:	NO.	BY:	DATE:	SHEET NO.	S-11
1			3			TOTAL SHEETS	17
2			4				

11/11/2014
BD-5109AD_SD_2MR_11.dgn

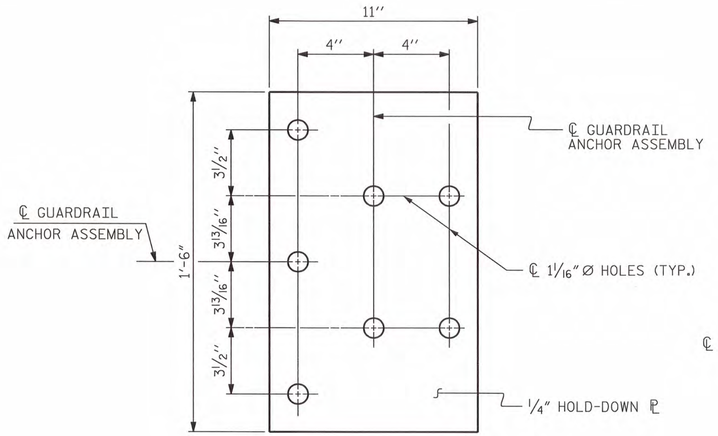

PLAN

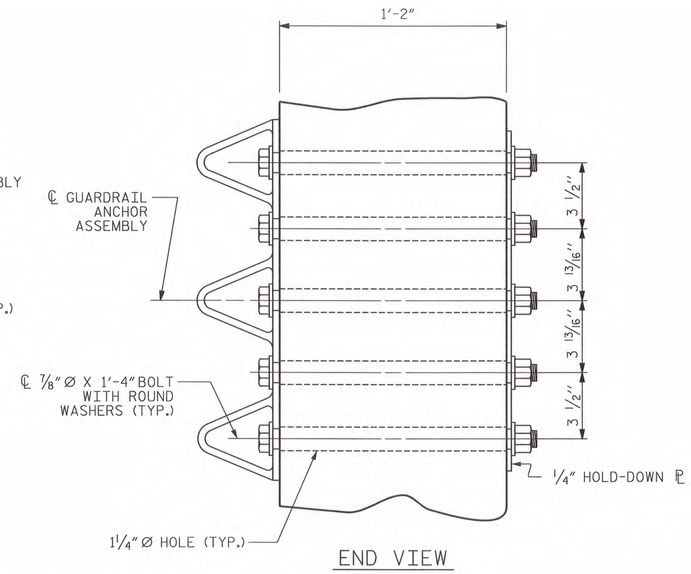

END VIEW

GUARDRAIL ANCHOR ASSEMBLY DETAILS

NOTES

THE GUARDRAIL ANCHOR ASSEMBLY SHALL CONSIST OF A 1/4″ HOLD DOWN PLATE AND 7 - 7/8″ Ø BOLTS WITH NUTS AND WASHERS.

THE HOLD-DOWN PLATE SHALL CONFORM TO AASHTO M270 GRADE 36. AFTER FABRICATION, THE HOLD-DOWN PLATE SHALL BE HOT-DIP GALVANIZED IN ACCORDANCE WITH AASHTO M111.

BOLTS SHALL CONFORM TO THE REQUIREMENTS OF ASTM A307 AND NUTS SHALL CONFORM TO THE REQUIREMENTS OF AASHTO M291. BOLTS, NUTS AND WASHERS SHALL BE GALVANIZED. AT THE CONTRACTOR'S OPTION, STAINLESS STEEL BOLTS, NUTS AND WASHERS MAY BE USED AS AN ALTERNATE FOR THE 7/8″ Ø GALVANIZED BOLTS, NUTS AND WASHERS. THEY SHALL CONFORM TO OR EXCEED THE MECHANICAL REQUIREMENTS OF ASTM A307. THE USE OF THIS ALTERNATE SHALL BE APPROVED BY THE ENGINEER.

THE GUARDRAIL ANCHOR ASSEMBLY IS REQUIRED AT ALL POINTS WHERE APPROACH GUARDRAIL IS TO BE ATTACHED TO THE END OF THE PARAPET. FOR POINTS OF ATTACHMENT, SEE SKETCH.

AFTER INSTALLATION, THE EXPOSED THREAD OF THE BOLT SHALL BE BURRED WITH A SHARP POINTED TOOL.

THE COST OF THE GUARDRAIL ANCHOR ASSEMBLIES WITH BOLTS, NUTS AND WASHERS COMPLETE IN PLACE, SHALL BE INCLUDED IN THE VARIOUS PAY ITEMS.

THE VERTICAL REINFORCING BARS MAY BE SHIFTED SLIGHTLY IN THE END POST TO CLEAR ASSEMBLY BOLTS.

THE 1 1/4″ Ø HOLES SHALL BE FORMED OR DRILLED WITH A CORE BIT. IMPACT TOOLS WILL NOT BE PERMITTED. ANY CONCRETE DAMAGED BY THIS WORK SHALL BE REPAIRED TO THE SATISFACTION OF THE ENGINEER.

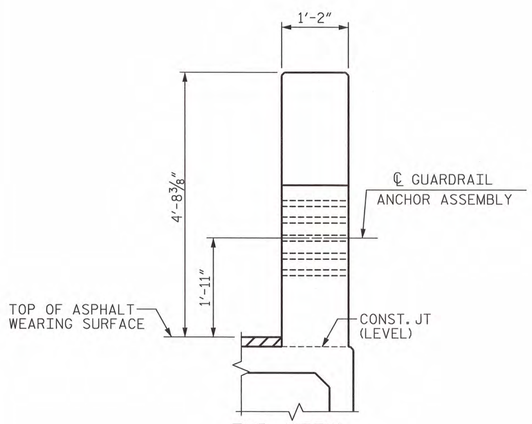

END VIEW
(TWO BAR METAL RAIL)

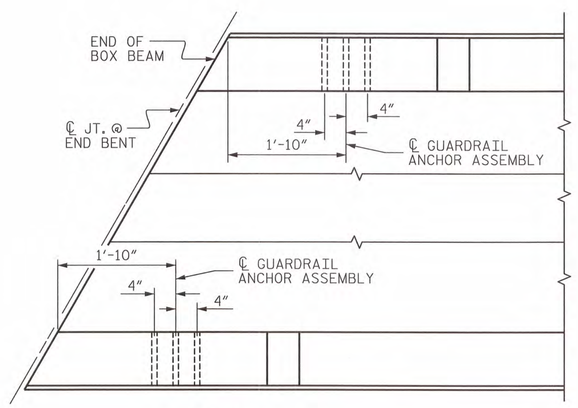

PLAN

LOCATION OF GUARDRAIL ANCHOR AT END POST

END BENT #1 SHOWN, END BENT #2 SIMILAR.

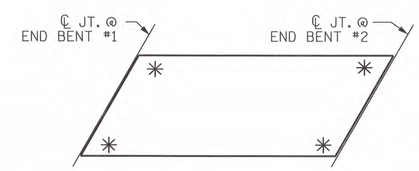

SKETCH SHOWING POINTS OF ATTACHMENT

✳ DENOTES GUARDRAIL ANCHOR ASSEMBLY

PROJECT NO. BD-5109AD
ROWAN COUNTY
STATION: 13+41.00 -L-

ASSEMBLED BY:	J. SMITH	DATE :	SEPT 2014
DRAWN BY:	J. SMITH	DATE :	SEPT 2014
CHECKED BY:	J. DOUGHTY	DATE :	SEPT 2014
DESIGN ENGINEER OF RECORD:	J. DOUGHTY	DATE :	OCT 2014

DRAWN BY : MAA 5/10	REV.	10/1/11	MAA/GM
CHECKED BY : GM 5/10	REV.	12/5/11	MAA/GM
	REV.	6/13	MAA/GM

PARSONS BRINCKERHOFF
434 FAYETTEVILLE STREET
SUITE 1500
RALEIGH, NC 27601
LICENSE NO. F-0165

NORTH CAROLINA PROFESSIONAL SEAL 032967 ENGINEER JOHN R. DOUGHTY
11/14/14

STATE OF NORTH CAROLINA
DEPARTMENT OF TRANSPORTATION
RALEIGH
STANDARD

GUARDRAIL ANCHORAGE DETAILS FOR 2 BAR METAL RAIL

REVISIONS								SHEET NO.
NO.	BY:	DATE:	NO.	BY:	DATE:			S-12
1			3					TOTAL SHEETS
2			4					17

STD. NO. GRA3

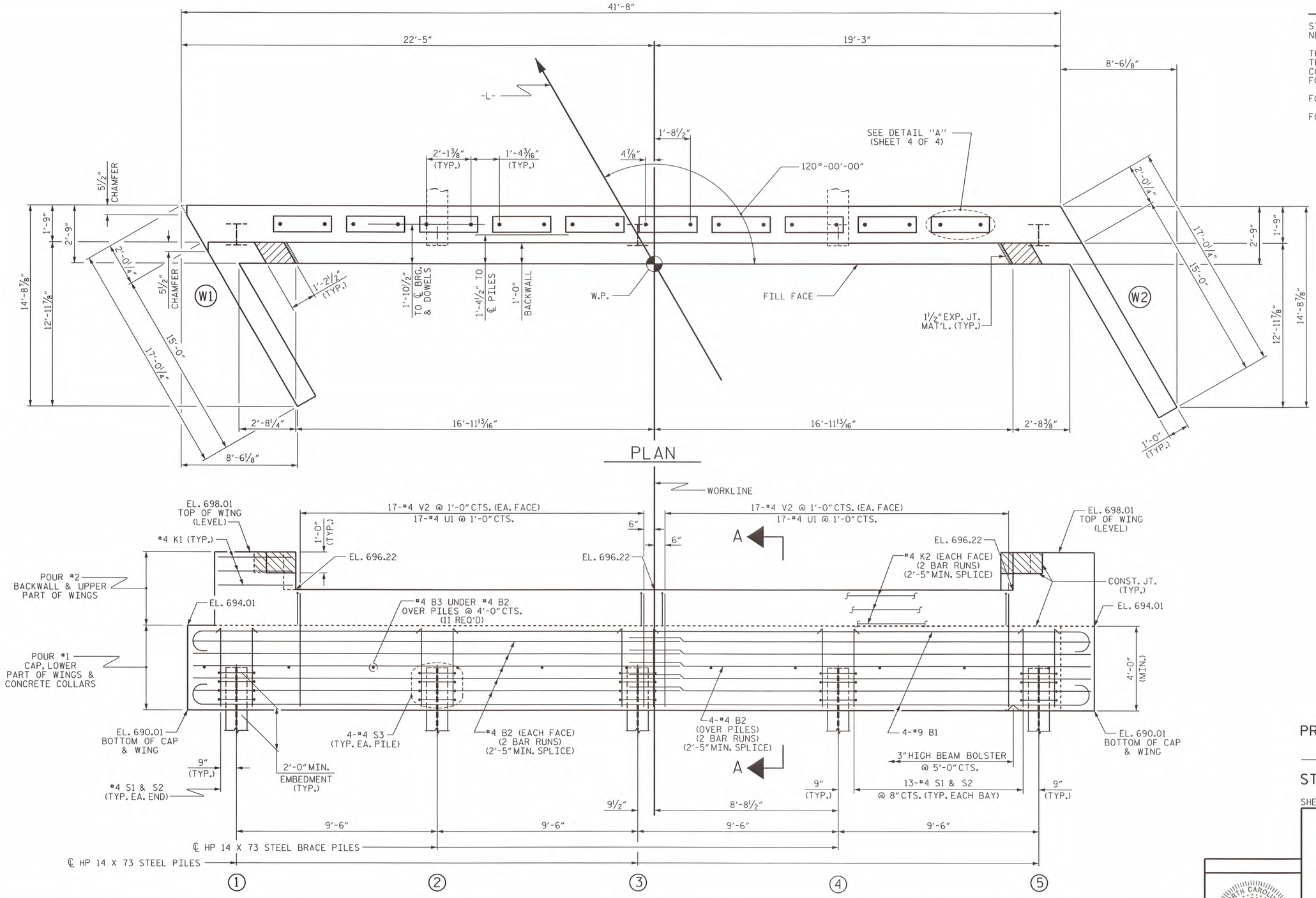

NOTES

STIRRUPS IN CAP MAY BE SHIFTED AS NECESSARY TO CLEAR DOWELS.

THE CONCRETE IN THE SHADED AREA OF THE WING SHALL BE POURED AFTER THE CONCRETE PARAPET IS CAST IF SLIP FORMING IS USED.

FOR PILE SPLICE DETAILS, SEE SHEET 4 OF 4.

FOR WING DETAILS, SEE SHEET 3 OF 4.

ELEVATION

WINGS NOT SHOWN FOR CLARITY.
FOR SECTION A-A, SEE SHEET 4 OF 4.
CONCRETE COLLARS FOR STEEL PILES NOT SHOWN IN PLAN AND ELEVATION VIEWS FOR CLARITY.
SEE "CORROSION PROTECTION FOR STEEL PILES DETAIL", SHEET 4 OF 4.

ASSEMBLED BY:	J. SMITH	DATE :	MAY 2014
DRAWN BY:	J. SMITH	DATE :	MAY 2014
CHECKED BY:	J. DOUGHTY	DATE :	JUNE 2014
DESIGN ENGINEER OF RECORD:	J. DOUGHTY	DATE :	OCT 2014
DRAWN BY : WJH 12/11			
CHECKED BY : AAC 12/11			

PARSONS BRINCKERHOFF
434 FAYETTEVILLE STREET
SUITE 1500
RALEIGH, NC 27601
LICENSE NO. F-0165

NORTH CAROLINA PROFESSIONAL SEAL 032967 ENGINEER JASON A. DOUGHTY
11/11/14

PROJECT NO. BD-5109AD
ROWAN COUNTY
STATION: 13+41.00 -L-

SHEET 1 OF 4

STATE OF NORTH CAROLINA
DEPARTMENT OF TRANSPORTATION
RALEIGH

SUBSTRUCTURE

END BENT No. 1

REVISIONS								SHEET NO.
NO.	BY:	DATE:	NO.	BY:	DATE:			S-13
1			3					TOTAL SHEETS
2			4					17

STD. NO. EB_30_120S4_39BB

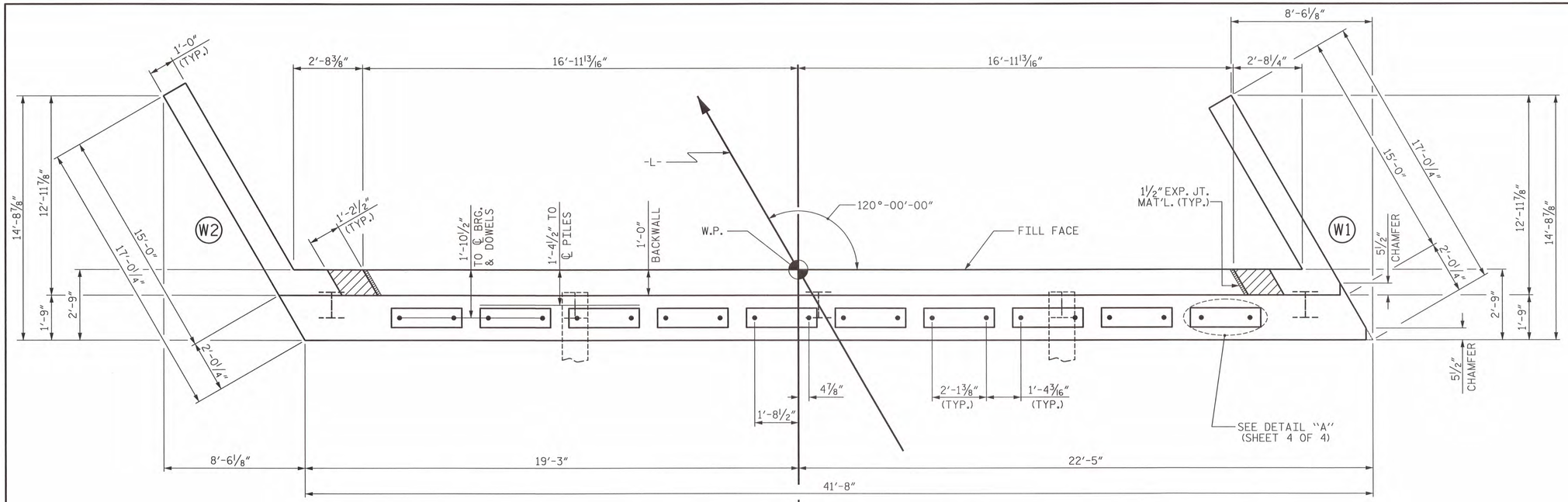

PLAN

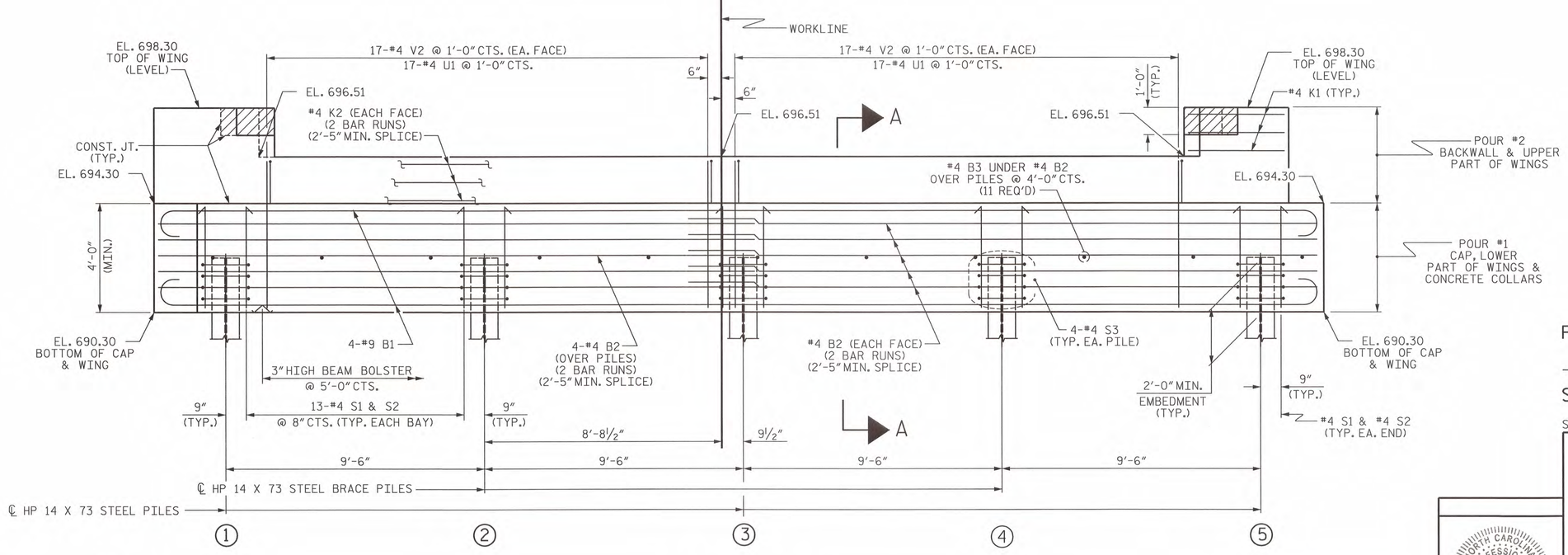

ELEVATION

WINGS NOT SHOWN FOR CLARITY.
FOR SECTION A-A, SEE SHEET 4 OF 4.
CONCRETE COLLARS FOR STEEL PILES NOT SHOWN IN PLAN AND ELEVATION VIEWS FOR CLARITY.
SEE "CORROSION PROTECTION FOR STEEL PILES DETAIL", SHEET 4 OF 4.

NOTES

STIRRUPS IN CAP MAY BE SHIFTED AS NECESSARY TO CLEAR DOWELS.

THE CONCRETE IN THE SHADED AREA OF THE WING SHALL BE POURED AFTER THE CONCRETE PARAPET IS CAST IF SLIP FORMING IS USED.

FOR PILE SPLICE DETAILS, SEE SHEET 4 OF 4.

FOR WING DETAILS, SEE SHEET 3 OF 4.

PROJECT NO. BD-5109AD
ROWAN COUNTY
STATION: 13+41.00 -L-

SHEET 2 OF 4

STATE OF NORTH CAROLINA
DEPARTMENT OF TRANSPORTATION
RALEIGH

SUBSTRUCTURE
END BENT No. 2

ASSEMBLED BY:	J. SMITH	DATE :	MAY 2014
DRAWN BY:	J. SMITH	DATE :	MAY 2014
CHECKED BY:	J. DOUGHTY	DATE :	JUNE 2014
DESIGN ENGINEER OF RECORD:	J. DOUGHTY	DATE :	OCT 2014
DRAWN BY : WJH 12/11			
CHECKED BY : AAC 12/11			

PARSONS BRINCKERHOFF
434 FAYETTEVILLE STREET
SUITE 1500
RALEIGH, NC 27601
LICENSE NO. F-0165

NORTH CAROLINA PROFESSIONAL SEAL 032967 ENGINEER JASON R. DOUGHTY
11/14/14

REVISIONS						SHEET NO.
NO.	BY:	DATE:	NO.	BY:	DATE:	S-14
1			3			TOTAL SHEETS
2			4			17

STD. NO. EB_30_120S4_39BB

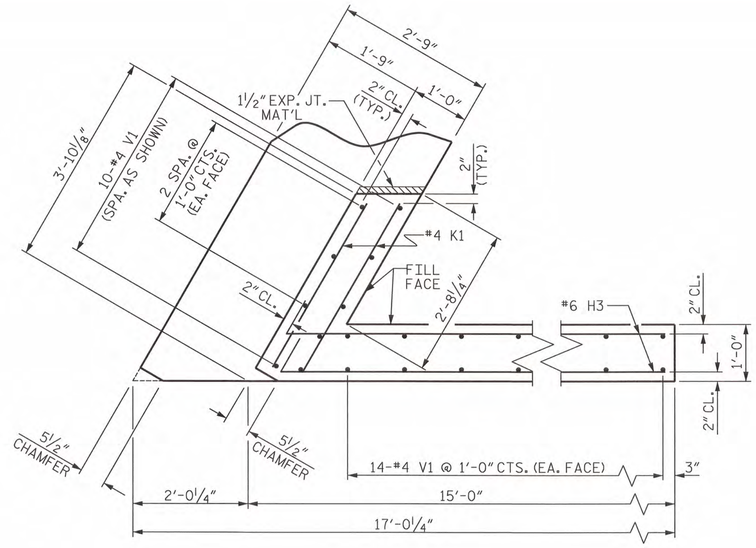

PLAN OF WING (W1)

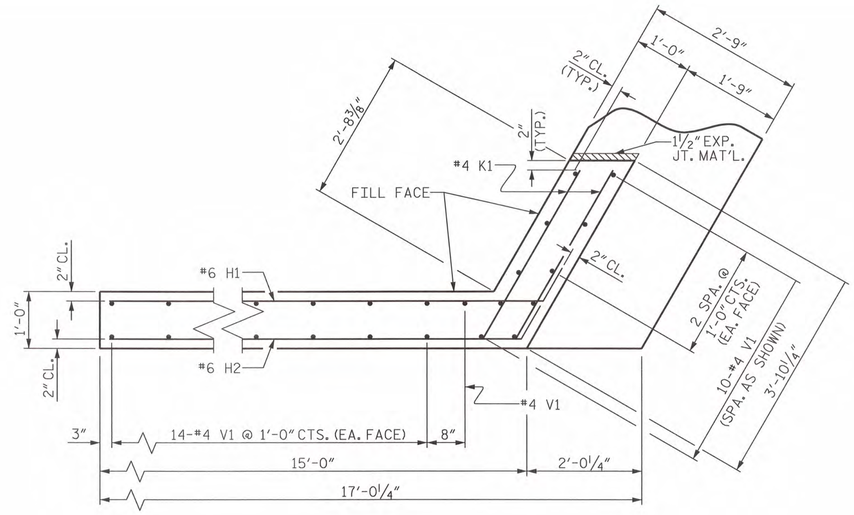

PLAN OF WING (W2)

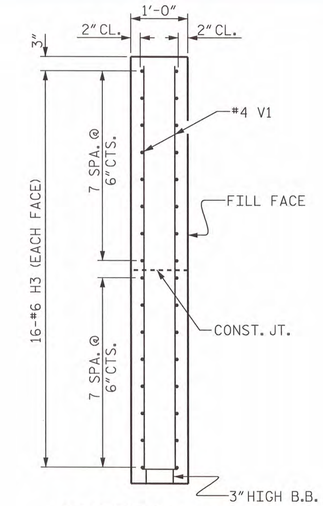

SECTION X-X

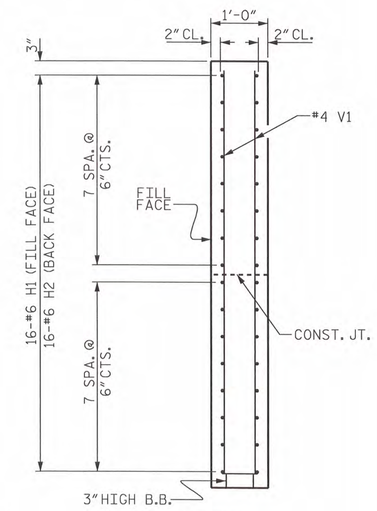

SECTION Y-Y

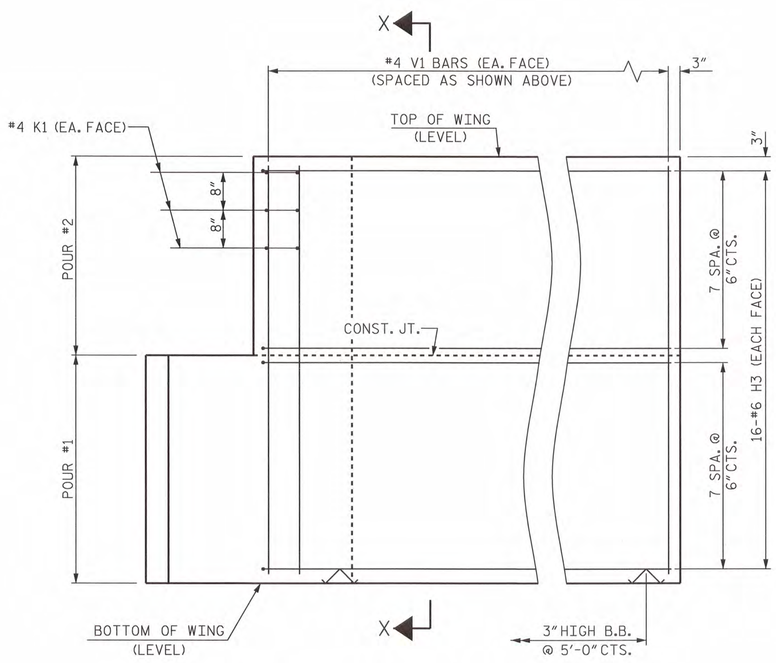

ELEVATION OF WING (W1)

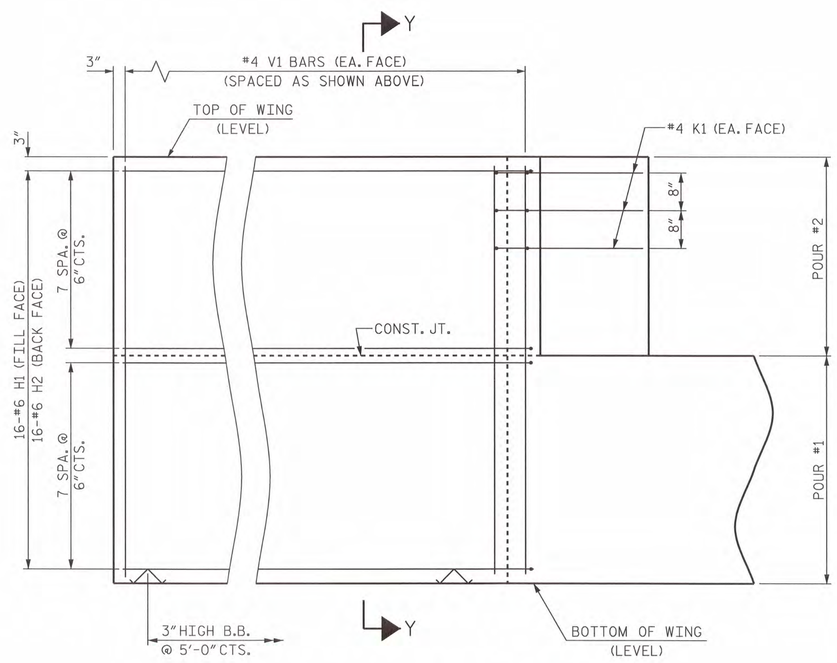

ELEVATION OF WING (W2)

WING DETAILS

PROJECT NO. BD-5109AD

ROWAN COUNTY

STATION: 13+41.00 -L-

SHEET 3 OF 4

ASSEMBLED BY:	J. SMITH	DATE :	MAY 2014
DRAWN BY:	J. SMITH	DATE :	MAY 2014
CHECKED BY:	J. DOUGHTY	DATE :	JUNE 2014
DESIGN ENGINEER OF RECORD:	J. DOUGHTY	DATE :	OCT 2014

DRAWN BY : WJH 12/11
CHECKED BY : AAC 12/11

PARSONS BRINCKERHOFF
434 FAYETTEVILLE STREET
SUITE 1500
RALEIGH, NC 27601
LICENSE NO. F-0165

NORTH CAROLINA PROFESSIONAL SEAL 032967 ENGINEER JASON D. DOUGHTY
11/11/14

STATE OF NORTH CAROLINA
DEPARTMENT OF TRANSPORTATION
RALEIGH

SUBSTRUCTURE

END BENT
WING DETAILS

REVISIONS								SHEET NO.
NO.	BY:	DATE:	NO.	BY:	DATE:			S-15
1			3					TOTAL SHEETS
2			4					17

STD. NO. EB_30_120S4_39BB

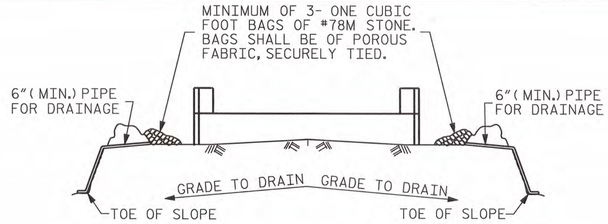

BAGGED STONE AND PIPE SHALL BE PLACED IMMEDIATELY AFTER COMPLETION OF END BENT EXCAVATION. PIPE MAY BE EITHER CONCRETE, CORRUGATED STEEL, CORRUGATED ALUMINUM ALLOY, OR CORRUGATED PLASTIC. PERFORATED PIPE WILL NOT BE ALLOWED.

BAGGED STONE SHALL REMAIN IN PLACE UNTIL THE ENGINEER DIRECTS THAT IT BE REMOVED. THE CONTRACTOR SHALL REMOVE AND DISPOSE OF SILT ACCUMULATIONS AT BAGGED STONE WHEN SO DIRECTED BY THE ENGINEER. BAGS SHALL BE REMOVED AND REPLACED WHENEVER THE ENGINEER DETERMINES THAT THEY HAVE DETERIORATED AND LOST THEIR EFFECTIVENESS.

NO SEPARATE PAYMENT WILL BE MADE FOR THIS WORK AND THE ENTIRE COST OF THIS WORK SHALL BE INCLUDED IN THE UNIT CONTRACT PRICE BID FOR THE SEVERAL PAY ITEMS.

TEMPORARY DRAINAGE AT END BENT

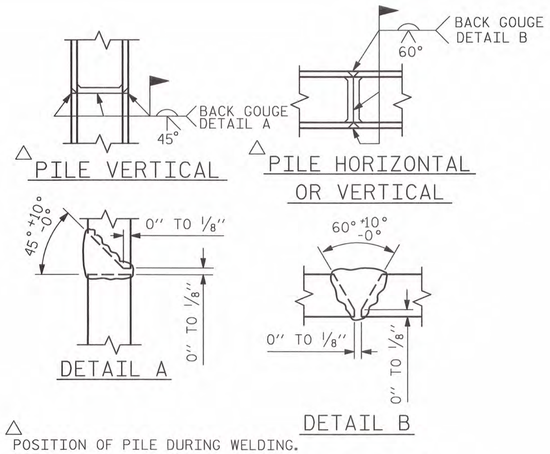

△ POSITION OF PILE DURING WELDING.

PILE SPLICE DETAILS

BAR TYPES

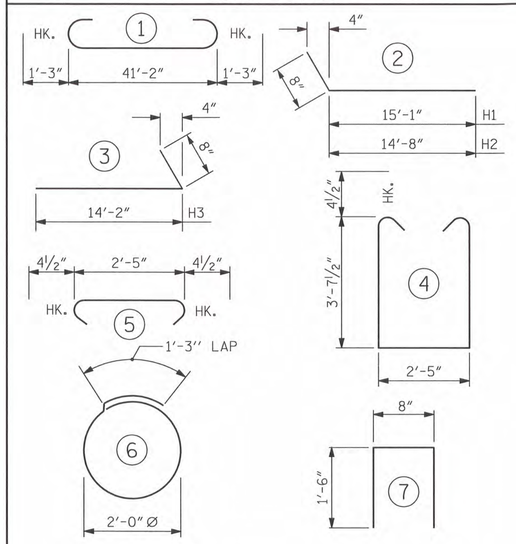

ALL BAR DIMENSIONS ARE OUT TO OUT.

END BENT No. 1	END BENT No. 2
HP 14 X 73 STEEL PILES	HP 14 X 73 STEEL PILES
NO: 5 LIN. FT.= 205	NO: 5 LIN. FT.= 180

BILL OF MATERIAL FOR ONE END BENT

BAR	NO.	SIZE	TYPE	LENGTH	WEIGHT
B1	8	#9	1	43'-8"	1188
B2	28	#4	STR	21'-11"	410
B3	11	#4	STR	2'-5"	18
D1	20	#8	STR	2'-3"	120
H1	16	#6	2	15'-9"	379
H2	16	#6	2	15'-4"	368
H3	32	#6	3	14'-10"	713
K1	12	#4	STR	3'-3"	26
K2	12	#4	STR	21'-11"	176
S1	54	#4	4	10'-5"	376
S2	54	#4	5	3'-2"	114
S3	20	#4	6	7'-7"	101
U1	34	#4	7	3'-8"	83
V1	77	#4	STR	7'-8"	394
V2	68	#4	STR	5'-10"	265

REINFORCING STEEL (FOR ONE END BENT) 4731 LBS.

CLASS A CONCRETE BREAKDOWN (FOR ONE END BENT)

POUR #1 CAP, LOWER PART OF WINGS & COLLARS 22.2 C.Y.

POUR #2 BACKWALL & UPPER PART OF WINGS 8.1 C.Y.

TOTAL CLASS A CONCRETE 30.3 C.Y.

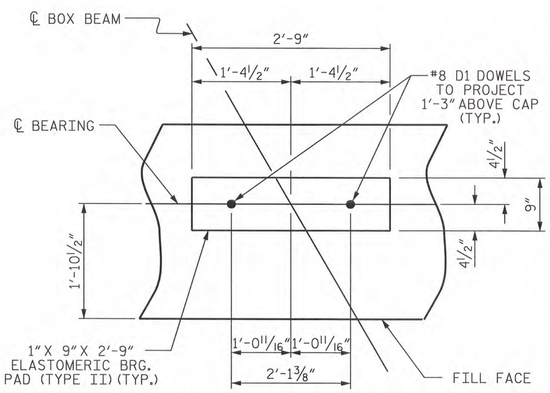

DETAIL "A"

(END BENT No. 1 SHOWN, END BENT No. 2 SIMILAR BY ROTATION)

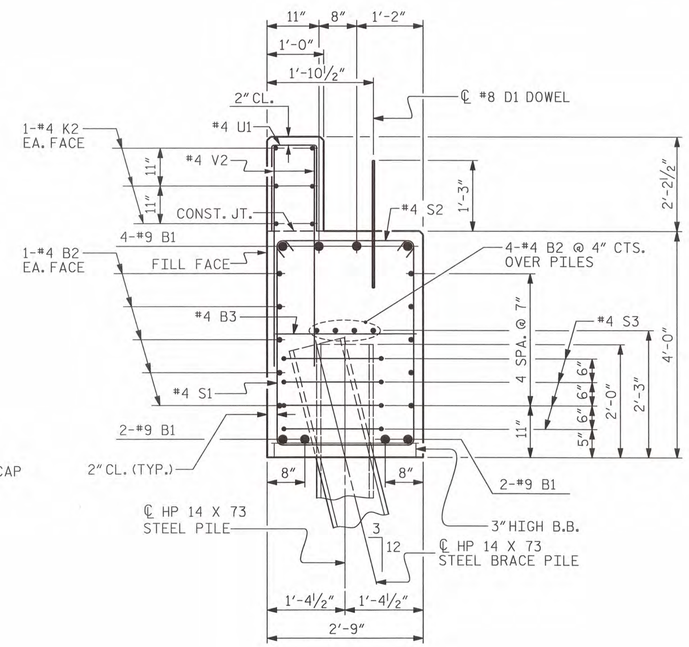

SECTION A-A

(CONCRETE COLLAR NOT SHOWN FOR CLARITY. SEE "CORROSION PROTECTION FOR STEEL PILES DETAIL.")

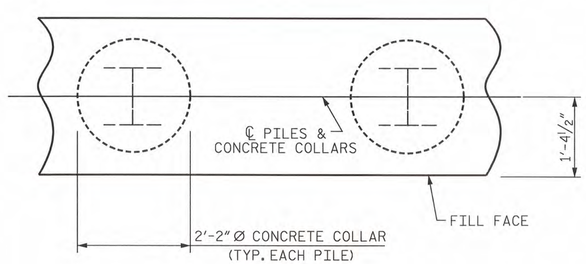

PLAN

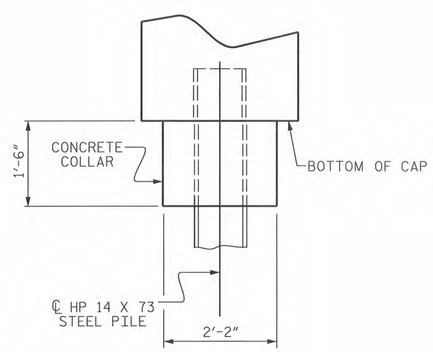

ELEVATION

CORROSION PROTECTION FOR STEEL PILES DETAIL

(END BENT No. 1 SHOWN, END BENT No. 2 SIMILAR BY ROTATION)

ASSEMBLED BY:	J. SMITH	DATE :	MAY 2014
DRAWN BY:	J. SMITH	DATE :	MAY 2014
CHECKED BY:	J. DOUGHTY	DATE :	JUNE 2014
DESIGN ENGINEER OF RECORD:	J. DOUGHTY	DATE :	OCT 2014
DRAWN BY : WJH 12/11			
CHECKED BY : AAC 12/11			

PROJECT NO. BD-5109AD

ROWAN COUNTY

STATION: 13+41.00 -L-

SHEET 4 OF 4

STATE OF NORTH CAROLINA
DEPARTMENT OF TRANSPORTATION
RALEIGH

SUBSTRUCTURE

END BENT No. 1 & 2 DETAILS

PARSONS BRINCKERHOFF
434 FAYETTEVILLE STREET
SUITE 1500
RALEIGH, NC 27601
LICENSE NO. F-0165

NORTH CAROLINA PROFESSIONAL SEAL 032967 ENGINEER JASON B. DOUGHTY

REVISIONS						SHEET NO.
NO.	BY:	DATE:	NO.	BY:	DATE:	S-16
1			3			TOTAL SHEETS
2			4			17

STD. NO. EB_30_120S4_39BB

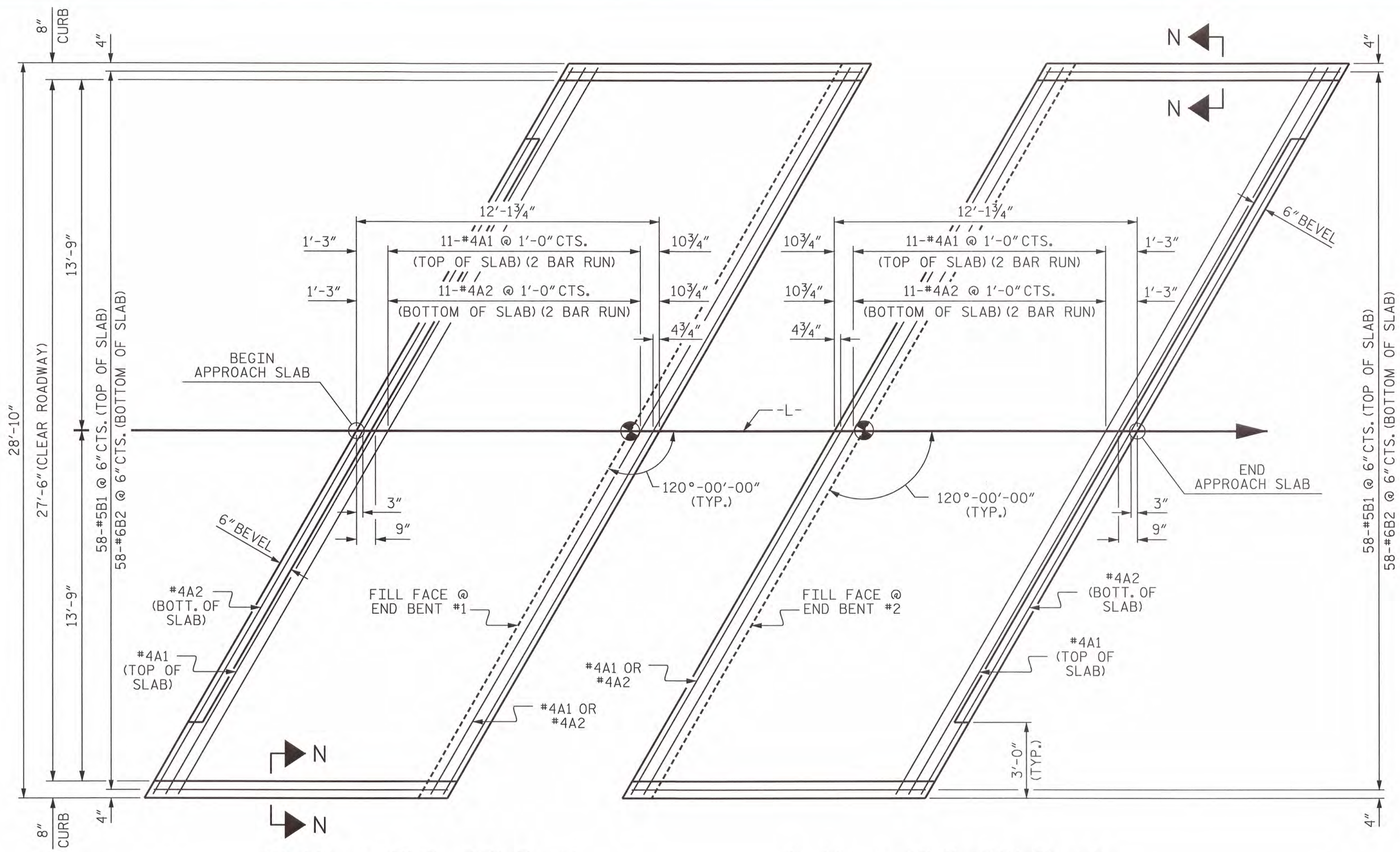

PLAN @ END BENT #1

PLAN @ END BENT #2

DIMENSIONS SHOWN ARE TYPICAL FOR BOTH APPROACH SLABS

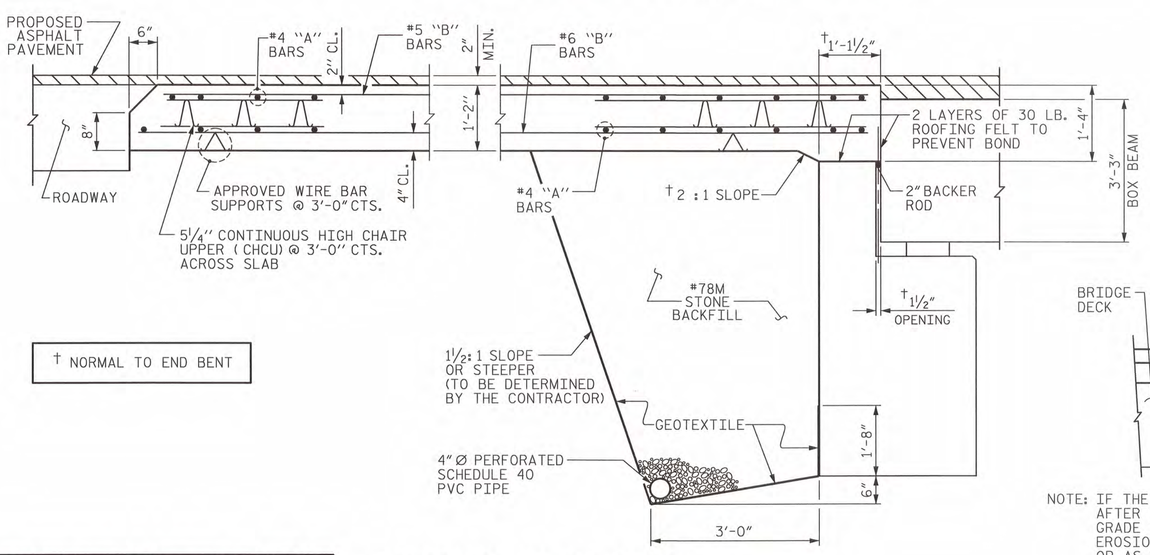

† NORMAL TO END BENT

SECTION THRU SLAB

NOTES

FOR BRIDGE APPROACH FILL INCLUDING GEOTEXTILE, 4" Ø DRAINAGE PIPE, AND #78M STONE BACKFILL, SEE ROADWAY PLANS.

GEOTEXTILE SHALL BE TYPE 1 IN ACCORDANCE WITH THE STANDARD SPECIFICATIONS SECTION 1056.

#78M STONE BACKFILL (CLASS V SELECT MATERIAL) SHALL BE IN ACCORDANCE WITH STANDARD SPECIFICATIONS SECTION 1016.

#78M STONE BACKFILL IS TO BE CONTINUOUS ALONG FILL FACE OF BACKWALL FROM OUTSIDE EDGE TO OUTSIDE EDGE OF APPROACH SLAB.

FOR THE 4" Ø DRAINAGE PIPE OUTLET(S), SEE ROADWAY STANDARD DRAWINGS.

AREA BETWEEN THE WINGWALL AND APPROACH SLAB SHALL BE GRADED TO DRAIN THE WATER AWAY FROM THE FILL FACE OF THE BRIDGE AND SHALL BE PAVED. SEE ROADWAY PLANS.

APPROACH SLAB GROOVING IS NOT REQUIRED.

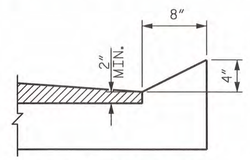

SECTION N-N

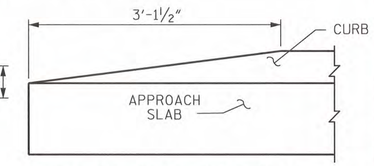

END OF CURB WITHOUT SHOULDER BERM GUTTER

CURB DETAILS

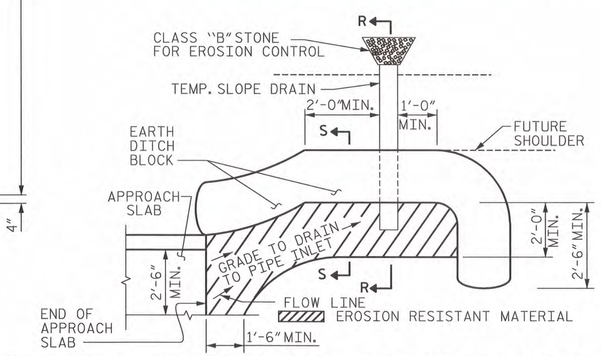

NOTE: IMMEDIATELY AFTER THE CONSTRUCTION OF THE APPROACH SLAB, THE CONTRACTOR SHALL PROVIDE TEMPORARY BERM AND SLOPE DRAIN. CONTRACTOR SHALL GRADE TO PIPE INLET AND PROVIDE EROSION RESISTANT MATERIAL AS SHOWN. THE EROSION RESISTANT MATERIAL SHALL BE EITHER 1) ASPHALT PLANT MIX, TYPE 1 OR TYPE 2, MIN. 2" DEPTH, 2) EROSION CONTROL MAT, OR 3) CONCRETE, AS DIRECTED BY THE ENGINEER. THE SLOPE DRAIN SHALL CONSIST OF A NON-PERFORATED TEMPORARY DRAINAGE PIPE, 12 INCHES IN DIAMETER.

PLAN VIEW

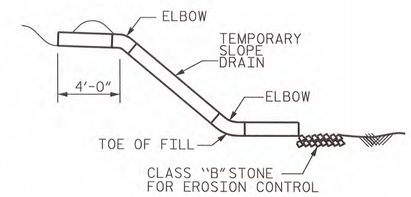

SECTION R-R

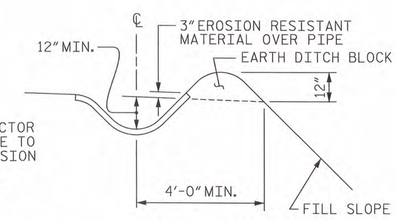

SECTION S-S

TEMPORARY BERM AND SLOPE DRAIN DETAILS

(TO BE USED WHEN SHOULDER BERM GUTTER IS REQUIRED)

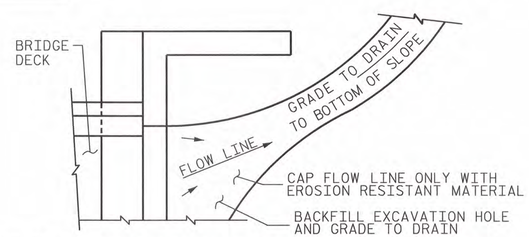

NOTE: IF THE APPROACH SLAB IS NOT CONSTRUCTED IMMEDIATELY AFTER THE BACKFILLING OF THE END BENT EXCAVATION, GRADE TO DRAIN TO THE BOTTOM OF THE SLOPE AND PROVIDE EROSION RESISTANT MATERIAL, SUCH AS FIBERGLASS ROVING OR AS DIRECTED BY THE ENGINEER TO PREVENT SOIL EROSION AND TO PROTECT THE AREA ADJACENT TO THE STRUCTURE. THE CONTRACTOR WILL BE REQUIRED TO REMOVE THESE MATERIALS PRIOR TO CONSTRUCTION OF THE APPROACH SLAB.

TEMPORARY DRAINAGE DETAIL

BILL OF MATERIAL

APPROACH SLAB AT EB #1

BAR	NO.	SIZE	TYPE	LENGTH	WEIGHT
✳ A1	26	#4	STR	17'-8"	307
A2	26	#4	STR	17'-7"	305
✳ B1	58	#5	STR	11'-1"	670
B2	58	#6	STR	11'-7"	1009
REINFORCING STEEL				LBS.	1314
✳ EPOXY COATED REINFORCING STEEL				LBS.	977
CLASS AA CONCRETE				C. Y.	15.6

APPROACH SLAB AT EB #2

BAR	NO.	SIZE	TYPE	LENGTH	WEIGHT
✳ A1	26	#4	STR	17'-8"	307
A2	26	#4	STR	17'-7"	305
✳ B1	58	#5	STR	11'-1"	670
B2	58	#6	STR	11'-7"	1009
REINFORCING STEEL				LBS.	1314
✳ EPOXY COATED REINFORCING STEEL				LBS.	977
CLASS AA CONCRETE				C. Y.	15.6

PROJECT NO. BD-5109AD

ROWAN COUNTY

STATION: 13+41.00 -L-

SPLICE LENGTHS		
BAR SIZE	EPOXY COATED	UNCOATED
#4	2'-0"	1'-9"
#5	2'-6"	2'-2"
#6	3'-10"	2'-7"

PARSONS BRINCKERHOFF
434 FAYETTEVILLE STREET
SUITE 1500
RALEIGH, NC 27601
LICENSE NO. F-0165

NORTH CAROLINA PROFESSIONAL SEAL 032967 ENGINEER JASON R. DOUGHTY
11/11/14

STATE OF NORTH CAROLINA
DEPARTMENT OF TRANSPORTATION
RALEIGH

STANDARD
BRIDGE APPROACH SLAB
FOR PRESTRESSED CONCRETE
BOX BEAM UNIT
(SUB-REGIONAL TIER)
120° SKEW

REVISIONS							SHEET NO.
NO.	BY:	DATE:	NO.	BY:	DATE:		S-17
1			3				TOTAL SHEETS
2			4				17

ASSEMBLED BY:	J. SMITH	DATE :	MAY 2014
DRAWN BY:	J. SMITH	DATE :	MAY 2014
CHECKED BY:	J. DOUGHTY	DATE :	JUNE 2014
DESIGN ENGINEER OF RECORD:	J. DOUGHTY	DATE :	OCT 2014
DRAWN BY : WJH 12/11			
CHECKED BY : AAC 12/11			

STD. NO. BAS_BB_30_120S

STANDARD NOTES

DESIGN DATA:

SPECIFICATIONS	A.A.S.H.T.O. (CURRENT)
LIVE LOAD	SEE PLANS
IMPACT ALLOWANCE	SEE A.A.S.H.T.O.
STRESS IN EXTREME FIBER OF	
STRUCTURAL STEEL - AASHTO M270 GRADE 36	20,000 LBS. PER SQ. IN.
- AASHTO M270 GRADE 50W	27,000 LBS. PER SQ. IN.
- AASHTO M270 GRADE 50	27,000 LBS. PER SQ. IN.
REINFORCING STEEL IN TENSION	
GRADE 60	24,000 LBS. PER SQ. IN.
CONCRETE IN COMPRESSION	1,200 LBS. PER SQ. IN.
CONCRETE IN SHEAR	SEE A.A.S.H.T.O.
STRUCTURAL TIMBER - TREATED OR	
UNTREATED - EXTREME FIBER STRESS	1,800 LBS. PER SQ. IN.
COMPRESSION PERPENDICULAR TO GRAIN OF TIMBER	375 LBS. PER SQ. IN.
EQUIVALENT FLUID PRESSURE OF EARTH	30 LBS. PER CU. FT. (MINIMUM)

MATERIAL AND WORKMANSHIP:

EXCEPT AS MAY OTHERWISE BE SPECIFIED ON PLANS OR IN THE SPECIAL PROVISIONS, ALL MATERIAL AND WORKMANSHIP SHALL BE IN ACCORDANCE WITH THE 2012 "STANDARD SPECIFICATIONS FOR ROADS AND STRUCTURES" OF THE N. C. DEPARTMENT OF TRANSPORTATION.

STEEL SHEET PILING FOR PERMANENT OR TEMPORARY APPLICATIONS SHALL BE HOT ROLLED.

CONCRETE:

UNLESS OTHERWISE REQUIRED ON PLANS, CLASS A CONCRETE SHALL BE USED FOR ALL PORTIONS OF ALL STRUCTURES WITH THE EXCEPTION THAT: CLASS AA CONCRETE SHALL BE USED IN BRIDGE SUPERSTRUCTURES, ABUTMENT BACKWALLS, AND APPROACH SLABS; AND CLASS B CONCRETE SHALL BE USED FOR SLOPE PROTECTION AND RIP RAP.

CONCRETE CHAMFERS:

UNLESS OTHERWISE NOTED ON THE PLANS, ALL EXPOSED CORNERS ON STRUCTURES SHALL BE CHAMFERED 3/4" WITH THE FOLLOWING EXCEPTIONS: TOP CORNERS OF CURBS MAY BE ROUNDED TO 1-1/2" RADIUS WHICH IS BUILT INTO CURB FORMS; CORNERS OF TRANSVERSE FLOOR EXPANSION JOINTS SHALL BE ROUNDED WITH A 1/4" FINISHING TOOL UNLESS OTHERWISE REQUIRED ON PLANS; AND CORNERS OF EXPANSION JOINTS IN THE ROADWAY FACES AND TOPS OF CURBS AND SIDEWALKS SHALL BE ROUNDED TO A 1/4" RADIUS WITH A FINISHING STONE OR TOOL UNLESS OTHERWISE REQUIRED ON PLANS.

DOWELS:

DOWELS WHEN INDICATED ON PLANS AS FOR CULVERT EXTENSIONS, SHALL BE EMBEDDED AT LEAST 12" INTO THE OLD CONCRETE AND GROUTED INTO PLACE WITH 1:2 CEMENT MORTAR.

ALLOWANCE FOR DEAD LOAD DEFLECTION, SETTLEMENT, ETC. IN CASTING SUPERSTRUCTURES:

BRIDGES SHALL BE BUILT ON THE GRADE OR VERTICAL CURVE SHOWN ON PLANS. SLABS, CURBS AND PARAPETS SHALL CONFORM TO THE GRADE OR CURVE.

ALL DIMENSIONS WHICH ARE GIVEN IN SECTION AND ARE AFFECTED BY DEAD LOAD DEFLECTIONS ARE DIMENSIONS AT CENTER LINE OF BEARING UNLESS OTHERWISE NOTED ON PLANS. IN SETTING FORMS FOR STEEL BEAM BRIDGES AND PRESTRESSED CONCRETE GIRDER BRIDGES, ADJUSTMENTS SHALL BE MADE DUE TO THE DEAD LOAD DEFLECTIONS FOR THE ELEVATIONS SHOWN. WHERE BLOCKS ARE SHOWN OVER BEAMS FOR BUILDING UP TO THE SLAB, THE VERTICAL DIMENSIONS OF THE BLOCKS SHALL BE ADJUSTED BETWEEN BEARINGS TO COMPENSATE FOR DEAD LOAD DEFLECTIONS, VERTICAL CURVE ORDINATE, AND ACTUAL BEAM CAMBER. WHERE BOTTOM OF SLAB IS IN LINE WITH BOTTOM OF TOP FLANGES, DEPTH OF SLAB BETWEEN BEARINGS SHALL BE ADJUSTED TO COMPENSATE FOR DEAD LOAD DEFLECTION, VERTICAL CURVE ORDINATE, AND ACTUAL BEAM CAMBER.

IN SETTING FALSEWORK AND FORMS FOR REINFORCED CONCRETE SPANS, AN ALLOWANCE SHALL BE MADE FOR DEAD LOAD DEFLECTIONS, SETTLEMENT OF FALSEWORK, AND PERMANENT CAMBER WHICH SHALL BE PROVIDED FOR IN ADDITION TO THE ELEVATIONS SHOWN. AFTER REMOVAL OF THE FALSEWORK, THE FINISHED STRUCTURES SHALL CONFORM TO THE PROFILE AND ELEVATIONS SHOWN ON THE PLANS AND CONSTRUCTION ELEVATIONS FURNISHED BY THE ENGINEER.

DETAILED DRAWINGS FOR FALSEWORK OR FORMS FOR BRIDGE SUPERSTRUCTURE AND ANY STRUCTURE OR PARTS OF A STRUCTURE AS NOTED ON THE PLANS SHALL BE SUBMITTED TO THE ENGINEER FOR APPROVAL BEFORE CONSTRUCTION OF THE FALSEWORK OR FORMS IS STARTED.

REINFORCING STEEL:

ALL REINFORCING STEEL SHALL BE DEFORMED. DIMENSIONS RELATIVE TO PLACEMENT OF REINFORCING ARE TO CENTERS OF BARS UNLESS OTHERWISE INDICATED IN THE PLANS. DIMENSIONS ON BAR DETAILS ARE TO CENTERS OF BARS OR ARE OUT TO OUT AS INDICATED ON PLANS.

WIRE BAR SUPPORTS SHALL BE PROVIDED FOR REINFORCING STEEL WHERE INDICATED ON THE PLANS. WHEN BAR SUPPORT PIECES ARE PLACED IN CONTINUOUS LINES, THEY SHALL BE SO PLACED THAT THE ENDS OF THE SUPPORTING WIRES SHALL BE LAPPED TO LOCK LEGS ON ADJOINING PIECES.

STRUCTURAL STEEL:

AT THE CONTRACTOR'S OPTION, HE MAY SUBSTITUTE 7/8" Ø SHEAR STUDS FOR THE 3/4" Ø STUDS SPECIFIED ON THE PLANS. THIS SUBSTITUTION SHALL BE MADE AT THE RATE OF 3 - 7/8" Ø STUDS FOR 4 - 3/4" Ø STUDS, AND STUD SPACING CHANGES SHALL BE MADE AS NECESSARY TO PROVIDE THE SAME EQUIVALENT NUMBER OF 7/8" Ø STUDS ALONG THE BEAM AS SHOWN FOR 3/4" Ø STUDS BASED ON THE RATIO OF 3 - 7/8" Ø STUDS FOR 4 - 3/4" Ø STUDS. STUDS OF THE LENGTH SPECIFIED ON THE PLANS MUST BE PROVIDED. THE MAXIMUM SPACING SHALL BE 2'-0".

EXCEPT AT THE INTERIOR SUPPORTS OF CONTINUOUS BEAMS WHERE THE COVER PLATE IS IN CONTACT WITH BEARING PLATE, THE CONTRACTOR MAY, AT HIS OPTION, SUBSTITUTE FOR THE COVER PLATES DESIGNATED ON THE PLANS COVER PLATES OF THE EQUIVALENT AREA PROVIDED THESE PLATES ARE AT LEAST 5/16" IN THICKNESS AND DO NOT EXCEED A WIDTH EQUAL TO THE FLANGE WIDTH LESS 2" OR A THICKNESS EQUAL TO 2 TIMES THE FLANGE THICKNESS. THE SIZE OF FILLET WELDS SHALL CONFORM TO THE REQUIREMENTS OF THE CURRENT ANSI/AASHTO/AWS "BRIDGE WELDING CODE". ELECTROSLAG WELDING WILL NOT BE PERMITTED.

WITH THE SOLE EXCEPTION OF EDGES AT SURFACES WHICH BEAR ON OTHER SURFACES, ALL SHARP EDGES AND ENDS OF SHAPES AND PLATES SHALL BE SLIGHTLY ROUNDED BY SUITABLE MEANS TO A RADIUS OF APPROXIMATELY 1/16 INCH OR EQUIVALENT FLAT SURFACE AT A SUITABLE ANGLE PRIOR TO PAINTING, GALVANIZING, OR METALLIZING.

HANDRAILS AND POSTS:

METAL STANDARDS AND FACES OF THE CONCRETE END POSTS FOR THE METAL RAIL SHALL BE SET NORMAL TO THE GRADE OF THE CURB, UNLESS OTHERWISE SHOWN ON PLANS. THE METAL RAIL AND TOPS OF CONCRETE POSTS USED WITH THE ALUMINUM RAIL SHALL BE BUILT PARALLEL TO THE GRADE OF THE CURB.

METAL HANDRAILS SHALL BE IN ACCORDANCE WITH THE PLANS. RAILS SHALL BE AS MANUFACTURED FOR BRIDGE RAILING. CASTINGS SHALL BE OF A UNIFORM APPEARANCE. FINS AND OTHER DEFORMATIONS RESULTING FROM CASTING OR OTHERWISE SHALL BE REMOVED IN A MANNER SO THAT A UNIFORM COLORING OF THE COMPLETED CASTING SHALL BE OBTAINED. CASTINGS WITH DISCOLORATIONS OR OF NON-UNIFORM COLORING WILL NOT BE ACCEPTED. CERTIFIED MILL REPORTS ARE REQUIRED FOR METAL RAILS AND POSTS.

SPECIAL NOTES:

GENERALLY, IN CASE OF DISCREPANCY, THIS STANDARD SHEET OF NOTES SHALL GOVERN OVER THE SPECIFICATIONS, BUT THE REMAINDER OF THE PLANS SHALL GOVERN OVER NOTES HEREON, AND SPECIAL PROVISIONS SHALL GOVERN OVER ALL. SEE SPECIFICATIONS ARTICLE 105-4.

ENGLISH

JANUARY, 1990

STD. NO. SN