STATE	STATE PROJECT REFERENCE NO.	SHEET NO.	TOTAL SHEETS
N.C.	COUNTRY CLUB RD	1	3

STATE PROJ. NO.	F.A. PROJ. NO.	DESCRIPTION

STATE OF NORTH CAROLINA
DIVISION OF HIGHWAYS

FORSYTH COUNTY

LOCATION: INTERSETION OF COUNTRY CLUB ROAD (1001) & MEADOWLARK DRIVE (1314)

TYPE OF WORK: GRADING, WIDENING, CURB & GUTTER, PAVING, DRAINAGE AND STRUCTURES

WBS #: COUNTRY CLUB RD @ MEADOWLARK DR

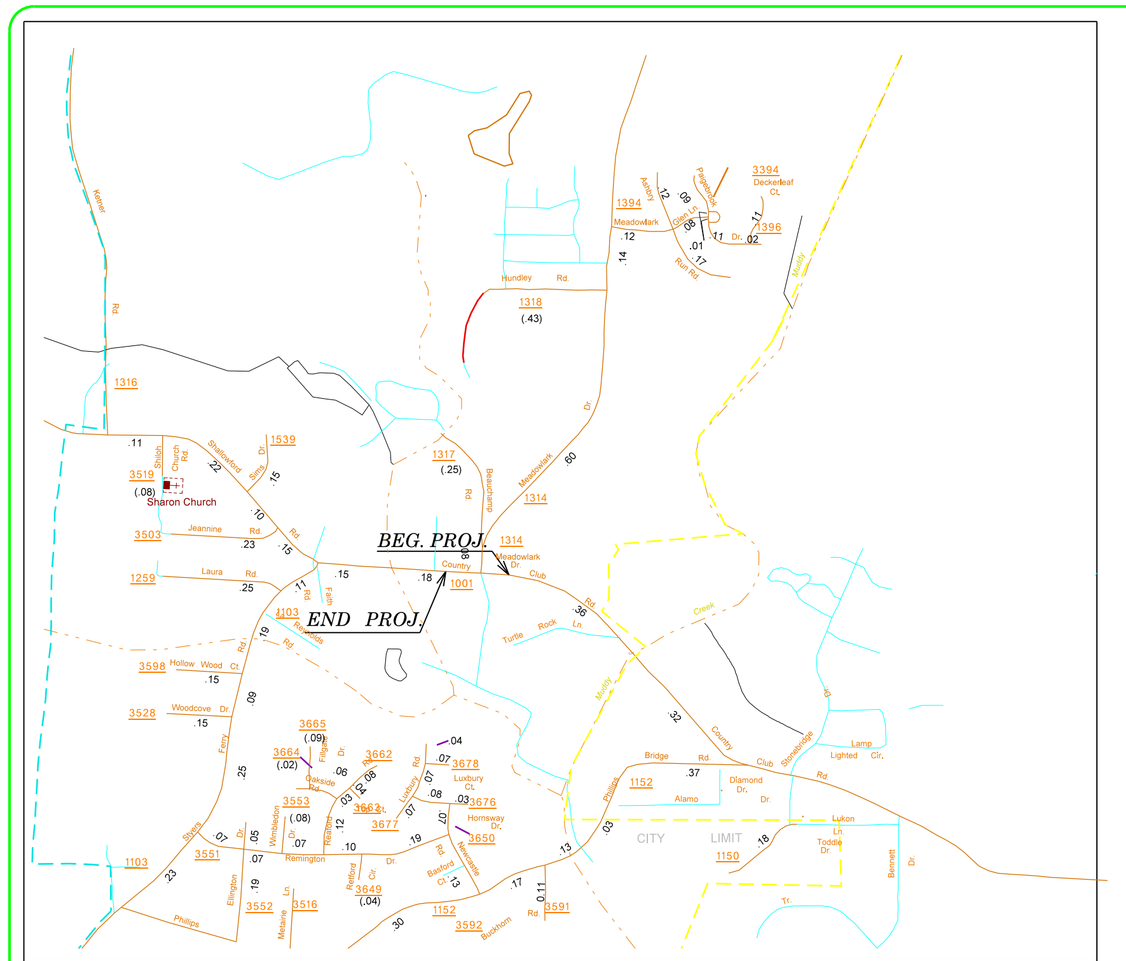

VICINITY MAP *NTS*

LEGEND

EXISTING EDGE OF PAVEMENT
EXISTING BACK OF CURB
EXISTING EDGE OF TRAVEL WAY
EXISTING CONCRETE ISLAND
PROPOSED EDGE OF PAVEMENT
PROPOSED BACK OF CURB
PROPOSED LANE LINES
(NOTE: STRIPING WILL BE DRAWN UP BY TRAFFIC SERVICES)
PROPOSED CONCRETE ISLAND
EXISTING RIGHT-OF-WAY LINE
PROPOSED RIGHT-OF-WAY LINE
EXISTING PROPERTY LINE
PROPOSED EASEMENT CONSTRUCTION
PROPOSED TOE OF SLOPE

UTILITIES & STRUCTURES

UTILITY & SIGNAL POLE
POWER POLE
TELEPHONE PEDESTAL
GUY WIRE
SIGNAL BOX
SANI.SEWER MANHOLE
SANI.SEWER CLEANOUT
WATER METER
WATER VALVE
FIRE HYDRANT
GAS METER
GAS VALVE
CATCH BASIN & DI'S
GUARDRAIL
FENCE
SIDEWALK
TREE
HEDGE ROW
WOOD LINE

EROSION CONTROL LEGEND

ROCK INLET PROTECTION:

896.01 TYPE A ..... A OR A
896.02 TYPE B ..... B OR B
896.03 TYPE C ..... C OR C
897.01 ROCK PIPE INLET PROTECTION .....
N/A PIPE OUTLET ENERGY DISSIPATOR ..
N/A DRAINAGE TURNOUT .....
N/A RIP-RAP LINED DITCH .....
N/A STREAM .....
N/A HIGH POINT / WATER FLOW DIRECTION X
245.01 SILT BASIN TYPE A
245.02 SILT BASIN TYPE B
245.03 TEMPORARY SILT DITCH TSD
245.05 TEMPORARY DIVERSION DITCH TD
100.01B STORM DRAINAGE GE PIPE
890.05 TEMP. SLOPE DRAIN W/ EARTH BERM
892.01 TEMPORARY ROCK SEDIMENT DAM TYPE A
892.02 TEMPORARY ROCK SEDIMENT DAM TYPE B
A BAFFLE IN A SEDIMENT DAM (1 EVERY 10') XXXXX
892.04 TEMPORARY ROCK SILT CHECK TYPE A
893.01 TEMPORARY SILT FENCE
894.01 ROCK SILT SCREEN
895.10 TEMPORARY ROCK SILT CHECK TYPE B
N/A WATTLE .....

GRAPHIC SCALES

0
PLANS

0
PROFILE (HORIZONTAL)

0
PROFILE (VERTICAL)

DESIGN DATA

NTS

PROJECT LENGTH

0.08 MILES

Prepared in the Office of:

DEPARTMENT OF TRANSPORTATION
DIV. 9 / DISTRICT II

375 Silas Creek Pkwy., Winston Salem NC, 27127

2012 STANDARD SPECIFICATIONS

COUNTY: FORSYTH
W.O. NUMBER: NA
PLAN SCALE: NA

DATE DRAWN	DRAWN BY
7/30/2014	GWG
REVISED DATE	**DRAWN BY**
9/12/2014	GWG

DISTRICT ENGINEER

P.E.
SIGNATURE:

DIVISION TRAFFIC ENGINEER

P.E.
SIGNATURE:

STATE OF NORTH CAROLINA DEPARTMENT OF TRANSPORTATION

09/08/99
17-SEP-2014 12:31
\\d9cad268341\rdx\CURRENT\Country Club @ Meadowlark\DGN\COUNTRYCLUB_MEADOWLARK_Rdy_dsn.dgn
gguntier AT D9CAD268340

PROJECT REFERENCE NO.	SHEET NO.
COUNTRYCLUB & MEADOWLARK	2
PLAN SHEET NO.	1
ROADWAY DESIGN ENGINEER	HYDRAULICS ENGINEER

CB	STATION	B.O.C.	INVERT	GRATE
1	10 + 50-Y-	745.60	742.30	E
2	15 + 44.78-L-	746.50	741.85	F

PIPE TABLE DATA

From	To	Type	Length +/-	% Slope
CB1	CB2	15" HDPE	29.5'	0.68%
CB2	JB2	18" RCP	68.5'	F/D
JB 1	JB2	18" RCP	108'	F/D
JB2	DI 1	18" RCP	117'	F/D
DI 4	DI 3	18" RCP	129'	F/D
DI 3	DI 2	18" RCP	37'	F/D

DRAINAGE STRUCTURES

Structures	Grate Types	Total Amount (Approx.)
CB's	F	1
CB's	E	1
DI's	E	4
JB's	NA	2

PIPES

Types	Total Length (Approx.)
15" HDPE	29.5' +/-
18" RCP	459' +/-

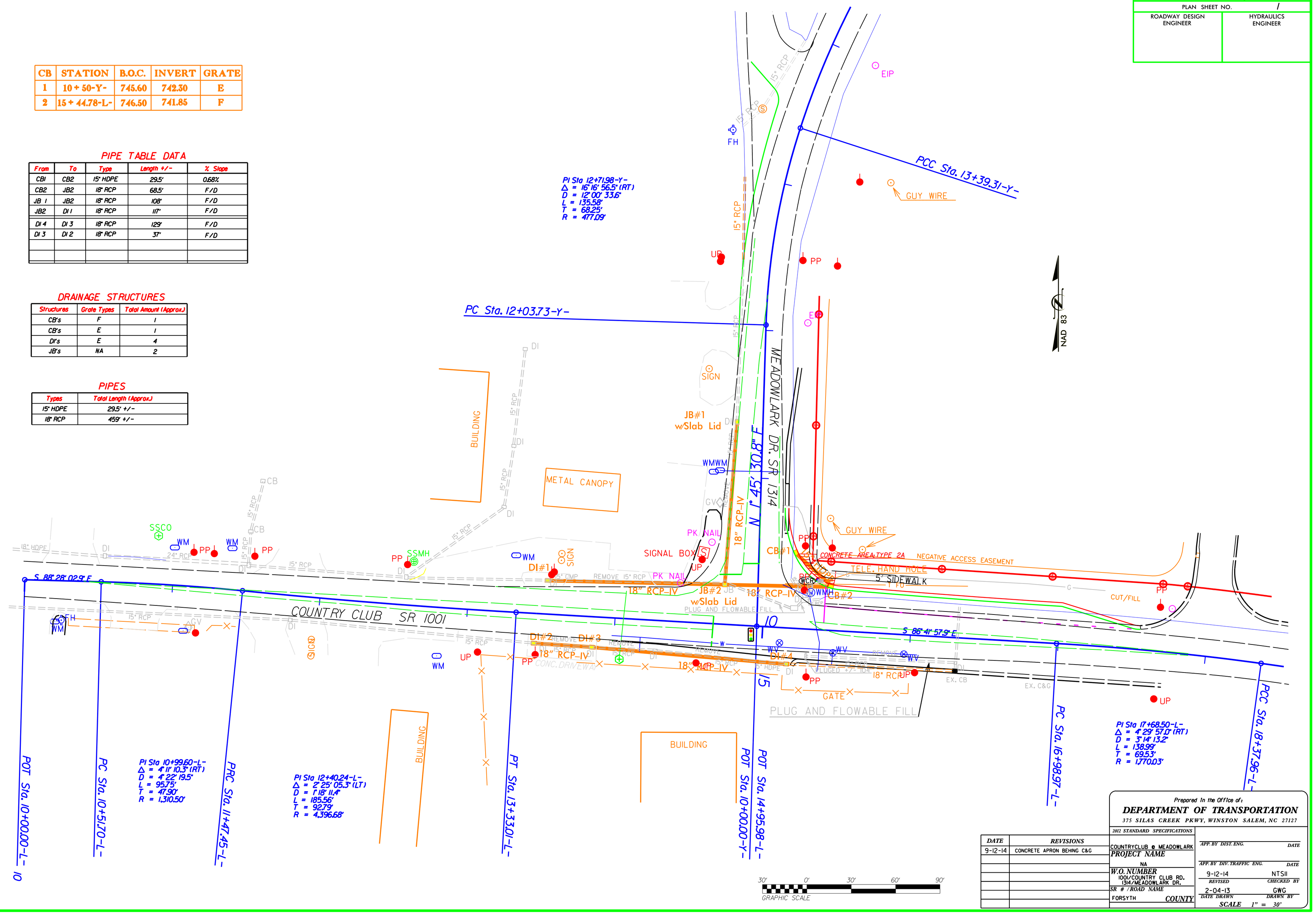

DATE	REVISIONS
9-12-14	CONCRETE APRON BEHING C&G

Prepared In the Office of:
DEPARTMENT OF TRANSPORTATION
375 SILAS CREEK PKWY, WINSTON SALEM, NC 27127

2012 STANDARD SPECIFICATIONS

PROJECT NAME: COUNTRYCLUB @ MEADOWLARK
NA
W.O. NUMBER: 1001/COUNTRY CLUB RD. 1314/MEADOWLARK DR.
SR # /ROAD NAME
FORSYTH COUNTY

APP. BY DIST. ENG. — DATE
APP. BY DIV. TRAFFIC ENG. — DATE
REVISED: 9-12-14 — CHECKED BY: NTS11
DATE DRAWN: 2-04-13 — DRAWN BY: CWG
SCALE 1" = 30'

REVISIONS

8/17/99

$$$$SYSTIME$$$$
$$$$DGN$$$$
$$$$USERNAME$$$$

PROJECT REFERENCE NO.	SHEET NO.
COUNTRYCLUB & MEADOWLARK	3
DETAIL SHEET NO.	1
ROADWAY DESIGN ENGINEER	HYDRAULICS ENGINEER

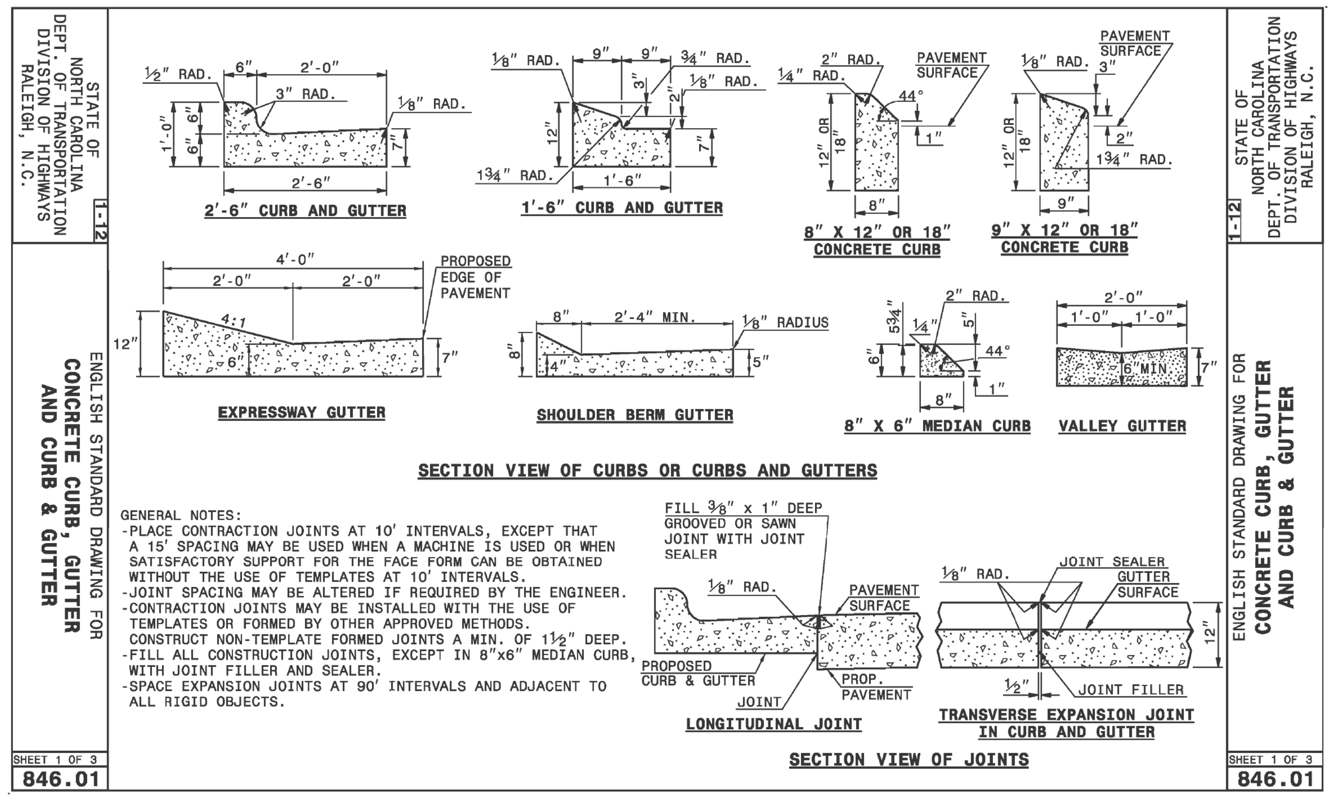

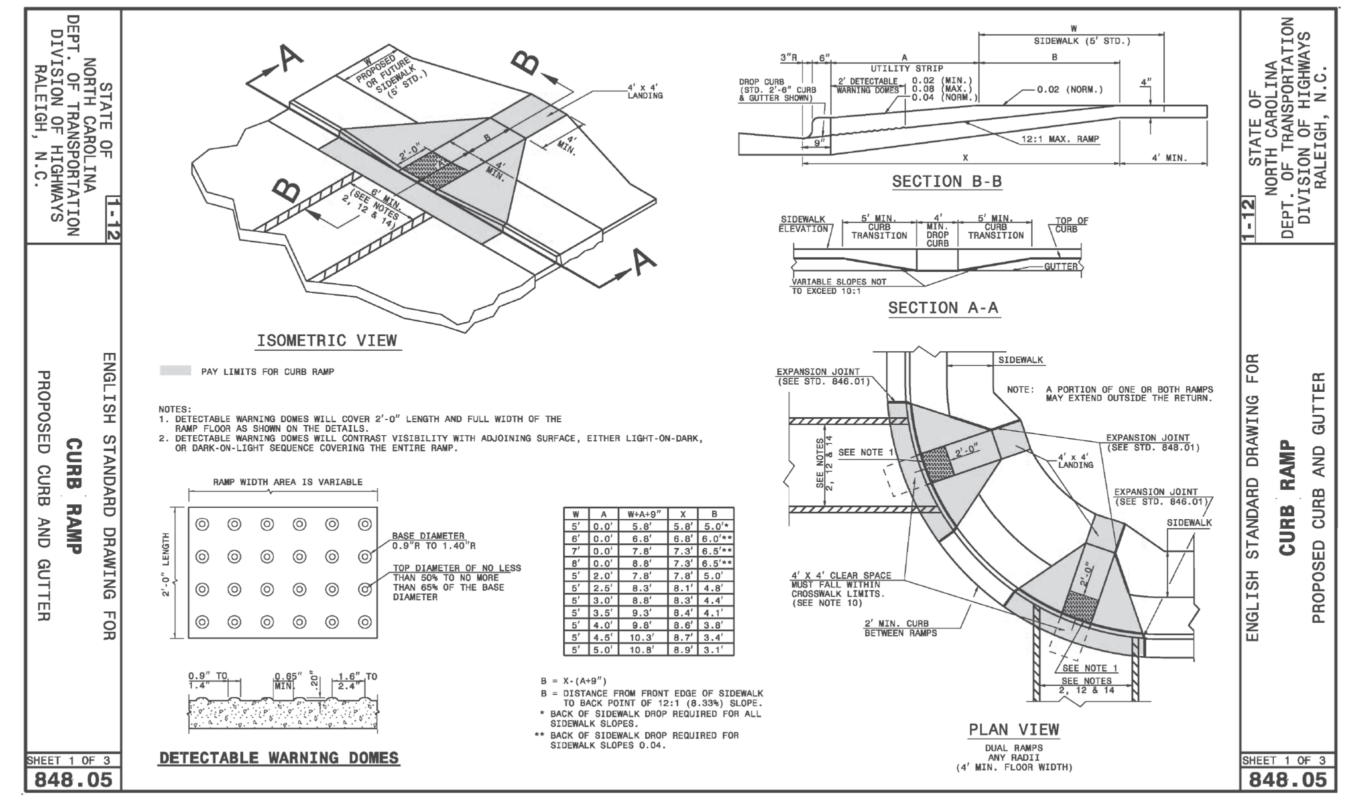

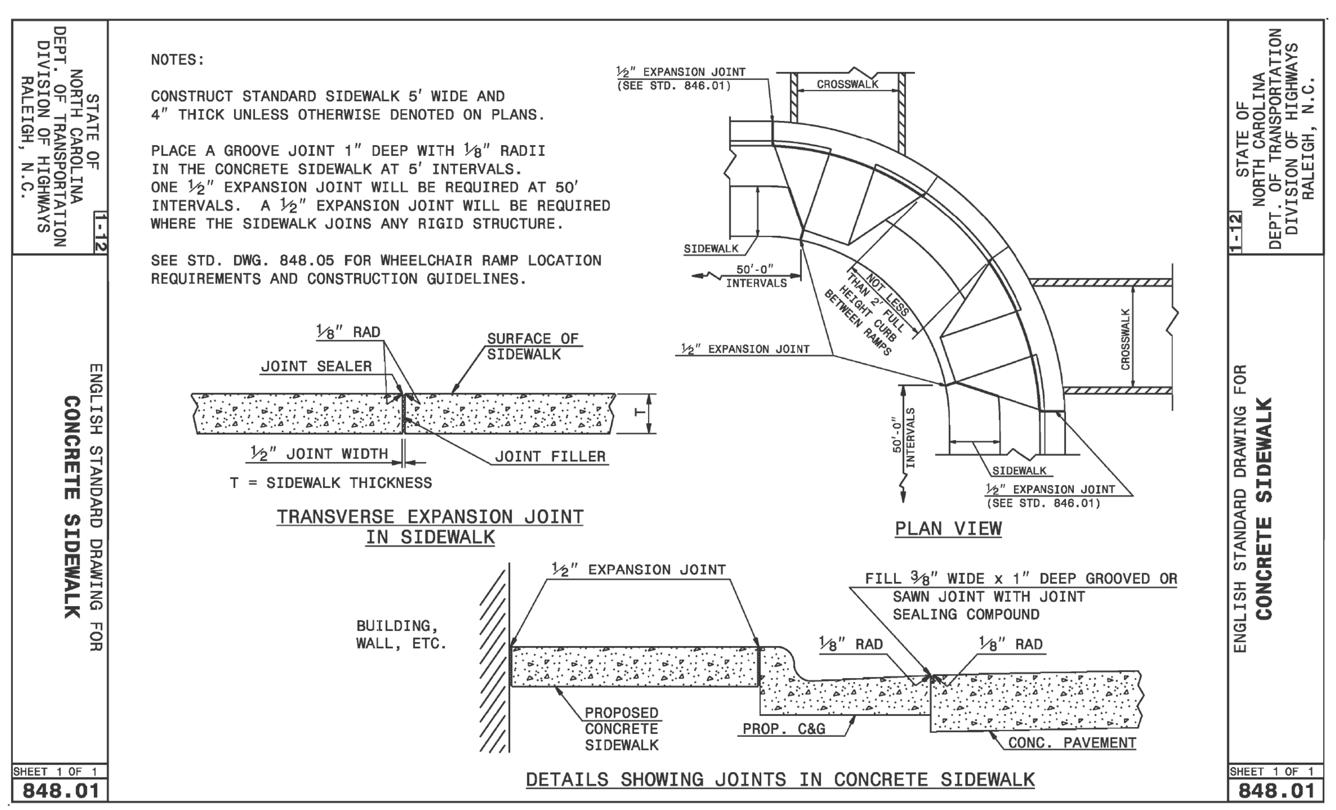

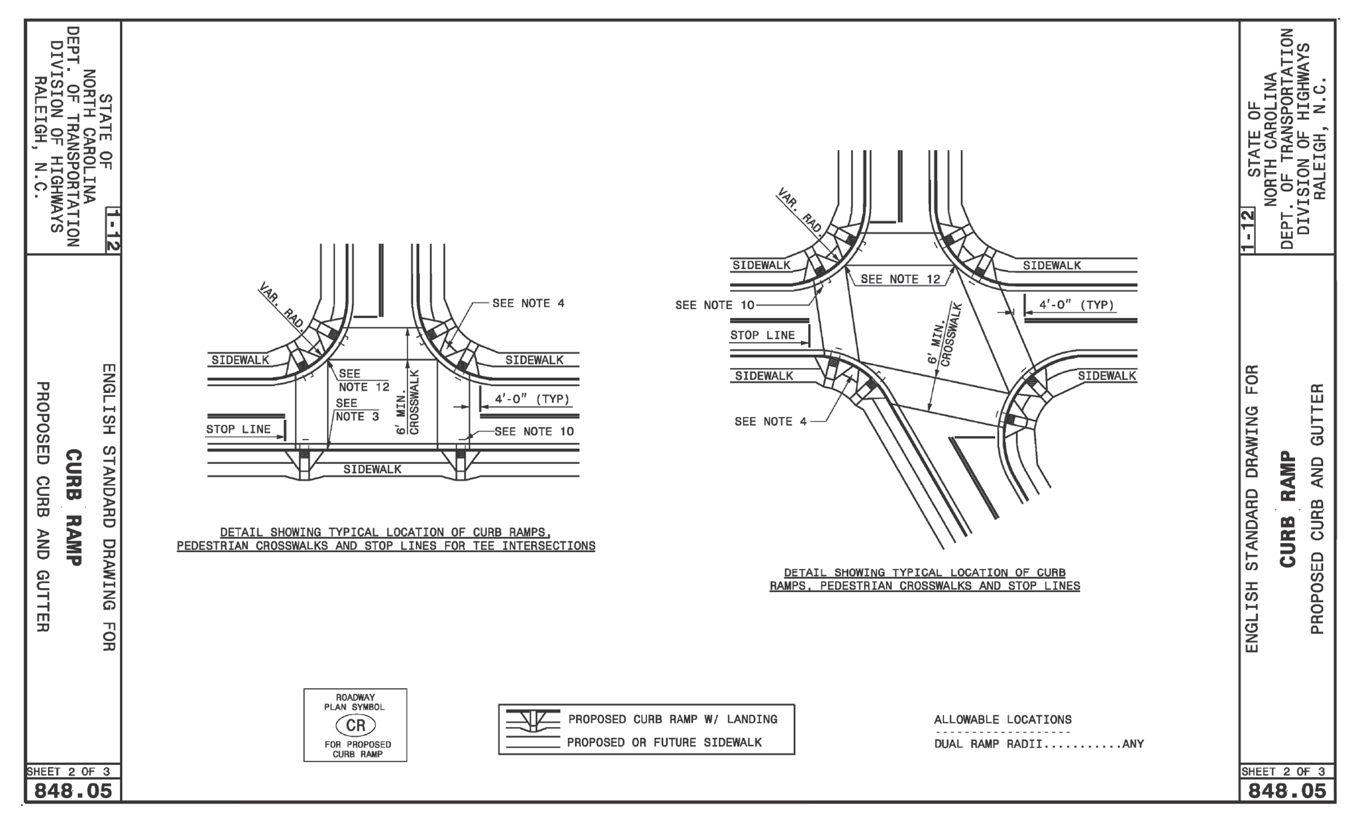

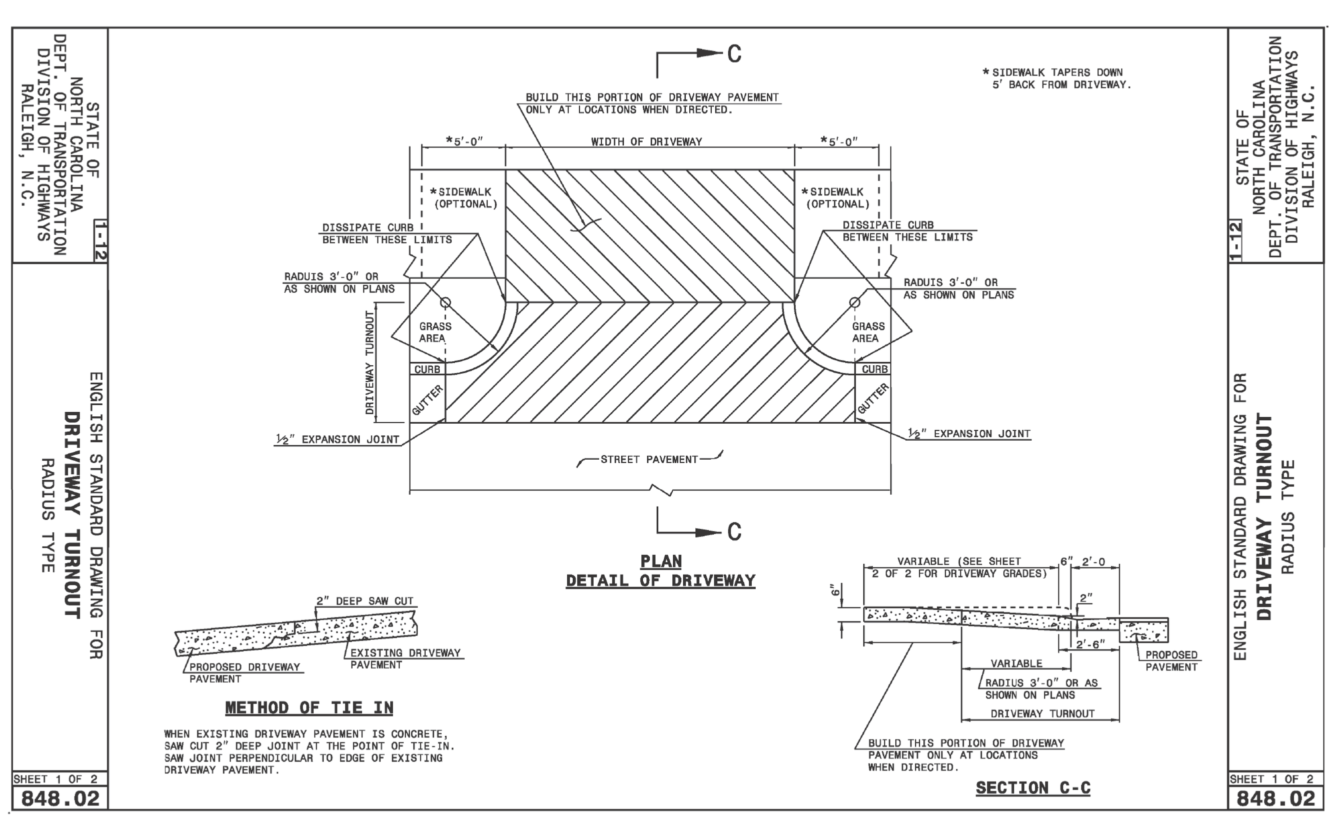

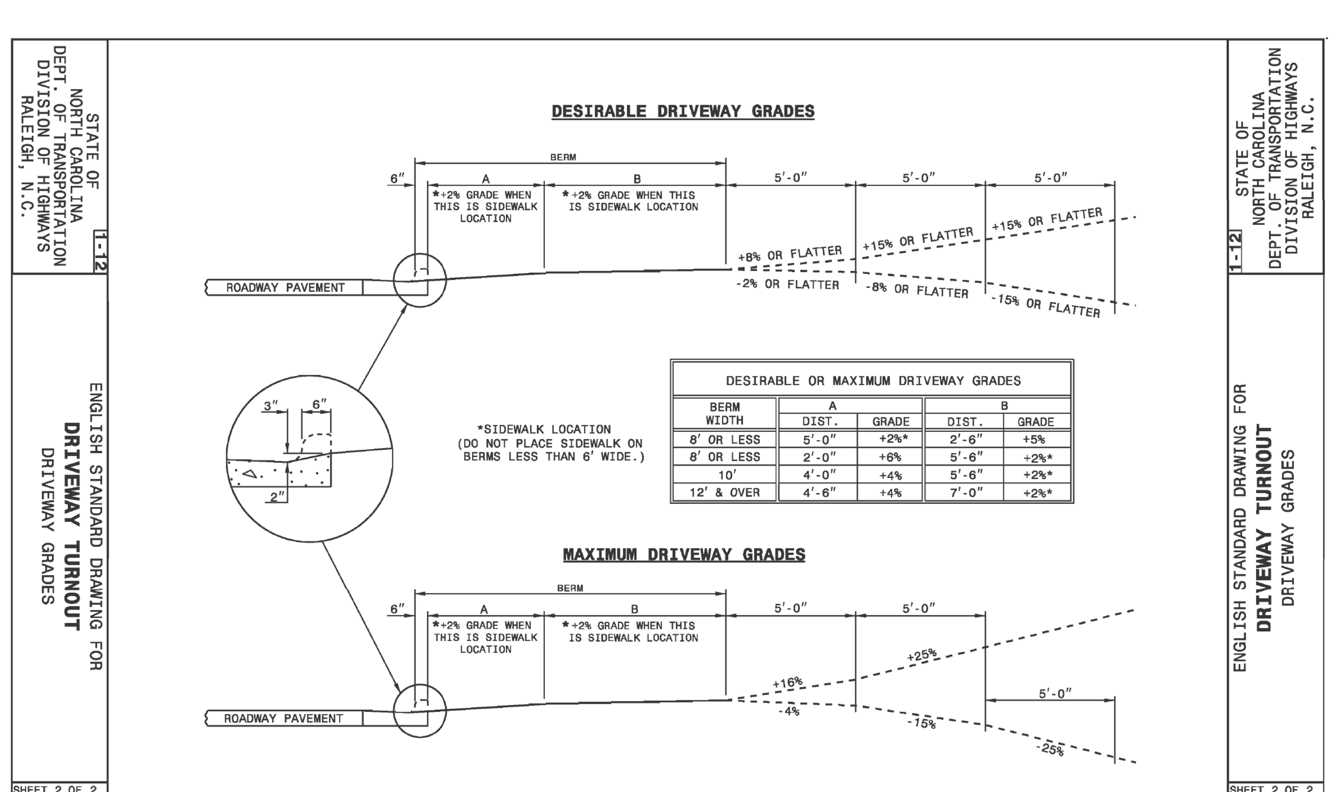

OPTIONAL CHART :

SITE DESCRIPTION	STABILIZATION	TIMEFRAME EXCEPTIONS
PERIMETER DIKES, SWALES, DITCHES AND SLOPES.	7 DAYS	NONE
HIGH QUALITY WATER ZONES	7 DAYS	NONE
SLOPES STEEPER THAN 3:1	7 DAYS	IF SLOPES ARE 10 FT. OR LESS IN LENGTH AND ARE NOT STEEPER THAN 2:1, 14 DAYS ARE ALLOWED
SLOPES 3:1 OR FLATTER	14 DAYS	7 DAYS FOR SLOPES GREATER THAN 50 FT. IN LENGTH
ALL OTHER AREAS FLATTER THAN 4:1	14 DAYS	NONE, EXCEPT FOR PERIMETERS AND HQW ZONES

ENGLISH STANDARD DRAWING FOR
CURB RAMPS
NOTES

STATE OF NORTH CAROLINA DEPT. OF TRANSPORTATION DIVISION OF HIGHWAYS RALEIGH, N.C. 1-12

SHEET 3 OF 3 — 848.05

NOTES:

1. CONSTRUCT THE RAMP SURFACE TO BE STABLE, FIRM, AND SLIP RESISTANT. CONSTRUCT THE CURB RAMP TYPE AS SHOWN IN THE PAVEMENT MARKING PLANS OR AS DIRECTED BY THE ENGINEER.
2. LOCATE CURB RAMPS AND PLACE PEDESTRIAN CROSSWALK MARKINGS AS SHOWN IN THE PAVEMENT MARKING PLANS. WHEN FIELD ADJUSTMENTS REQUIRE MOVING CURB RAMPS OR MARKINGS AS SHOWN, CONTACT THE SIGNING AND DELINEATION UNIT OR LOCATE AS DIRECTED BY THE ENGINEER.
3. COORDINATE THE CURB RAMP AND THE PEDESTRIAN CROSSWALK MARKINGS SO A 4'x4' CLEAR SPACE AT THE BASE OF THE CURB RAMP WILL FALL WITHIN THE PEDESTRIAN CROSSWALK LINES.
4. SET BACK DISTANCE FROM INSIDE CROSSWALK MARKING TO NEAREST EDGE OF TRAVEL LANE IS 4' MINIMUM.
5. REFER TO THE PAVEMENT MARKING PLANS FOR STOP BAR LOCATIONS AT SIGNALIZED INTERSECTIONS. IF A PAVEMENT MARKING PLAN IS NOT PROVIDED, CONTACT THE SIGNAL DESIGN SECTION FOR THE STOP BAR LOCATIONS OR LOCATE AS DIRECTED BY THE ENGINEER.
6. TERMINATE PARKING A MINIMUM OF 20' BACK OF A PEDESTRIAN CROSSWALK.
7. CONSTRUCT CURB RAMPS A MINIMUM OF 4' WIDE.
8. CONSTRUCT THE RUNNING SLOPE OF THE RAMP 8.33% MAXIMUM.
9. ALLOWABLE CROSS SLOPE ON SIDEWALKS AND CURB RAMPS WILL BE 2% MAXIMUM.
10. CONSTRUCT THE SIDE FLARE SLOPE A MAXIMUM OF 10% MEASURED ALONG THE CURB LINE.
11. CONSTRUCT THE COUNTER SLOPE OF THE GUTTER OR STREET AT THE BASE OF THE CURB RAMP A MAXIMUM OF 5% AND MAINTAIN A SMOOTH TRANSITION.
12. CONSTRUCT LANDINGS FOR SIDEWALK A MINIMUM OF 4'x4' WITH A MAXIMUM SLOPE OF 2% IN ANY DIRECTION. CONSTRUCT LANDINGS FOR MEDIAN ISLANDS A MINIMUM OF 5'x5' WITH A MAXIMUM SLOPE OF 2% IN ANY DIRECTION.
13. TO USE A MEDIAN ISLAND AS A PEDESTRIAN REFUGE AREA, MEDIAN ISLANDS WILL BE A MINIMUM OF 6' WIDE. CONSTRUCT MEDIAN ISLANDS TO PROVIDE PASSAGE OVER OR THROUGH THE ISLAND.
14. SMALL CHANNELIZATION ISLANDS THAT CAN NOT PROVIDE A 5'X5' LANDING AT THE TOP OF A RAMPS, WILL BE CUT THROUGH LEVEL WITH THE SURFACE STREET.
15. CURB RAMPS WITH RETURNED CURBS MAY BE USED ONLY WHERE PEDESTRIANS WOULD NOT NORMALLY WALK ACROSS THE RAMP. THE ADJACENT SURFACE IS PLANTING OR OTHER NON-WALKING SURFACE OR THE SIDE APPROACH IS SUBSTANTIALLY OBSTRUCTED.
16. PLACE A ½" EXPANSION JOINT WHERE THE CONCRETE CURB RAMP JOINS THE CURB AS SHOWN IN ROADWAY STANDARD DRAWING 848.01
17. PLACE ALL PEDESTRIAN PUSH BUTTON ACTUATORS AND CROSSING SIGNALS AS SHOWN IN THE PLANS OR AS SHOWN IN THE MUTCD.
18. CURB RAMPS THROUGH MEDIAN ISLANDS, SINGLE RAMPS AT DUAL CROSSWALKS OR LIMITED R/W SITUATIONS, WILL BE HANDLED BY SPECIAL DETAILS. CONTACT THE CONTRACT STANDARDS AND DEVELOPMENT UNIT FOR THE DETAILS OR FOR A SPECIAL DESIGN.

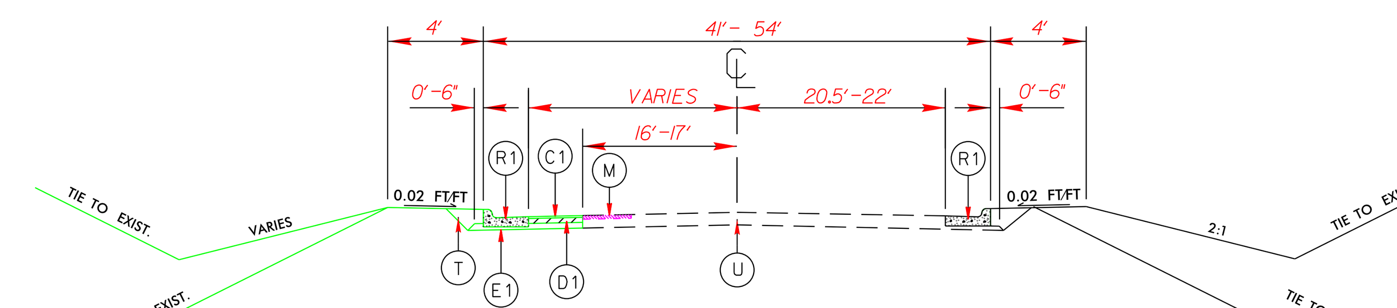

TYPICAL SECTION A
15+20 TO 17+54.62 -L-

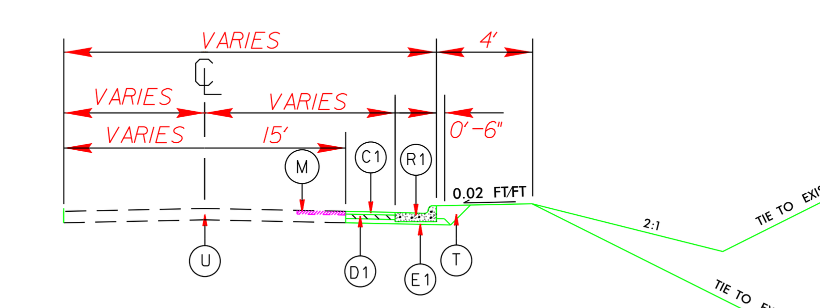

TYPICAL SECTION B
10+38.67 to 10+63.35 -Y-

SEDIMENT BASIN DESIGN :

SEDIMENT BASINS THAT DISCHARGE FROM THE PROJECT AND ARE DESIGNED TO HANDLE A DRAINAGE AREA LARGER THAN ONE ACRE WILL BE REQUIRED TO UTILIZE A SURFACE DEWATERING DEVICE,SUCH AS A SKIMMER,WEIR,OR FLASH BOARD RISER.

NOTE: APPLY 3.5 OZ OF (PAM) TO EVERY WATTLE EXCEPT FOR THE LAST ONE IN THAT RUN.

THESE EROSION AND SEDIMENT CONTROL PLANS COMPLY WITH THE REGULATIONS SET FORTH BY THE NCG010000 GENERAL CONSTRUCTION PERMIT EFFECTIVE AUGUST 3, 2011 ISSUED BY THE NORTH CAROLINA DEPARTMENT OF ENVIRONMENT AND NATURAL RESOURCES DIVISION OF WATER QUALITY.

WATTLE WITH POLYACRYLAMIDE DETAIL

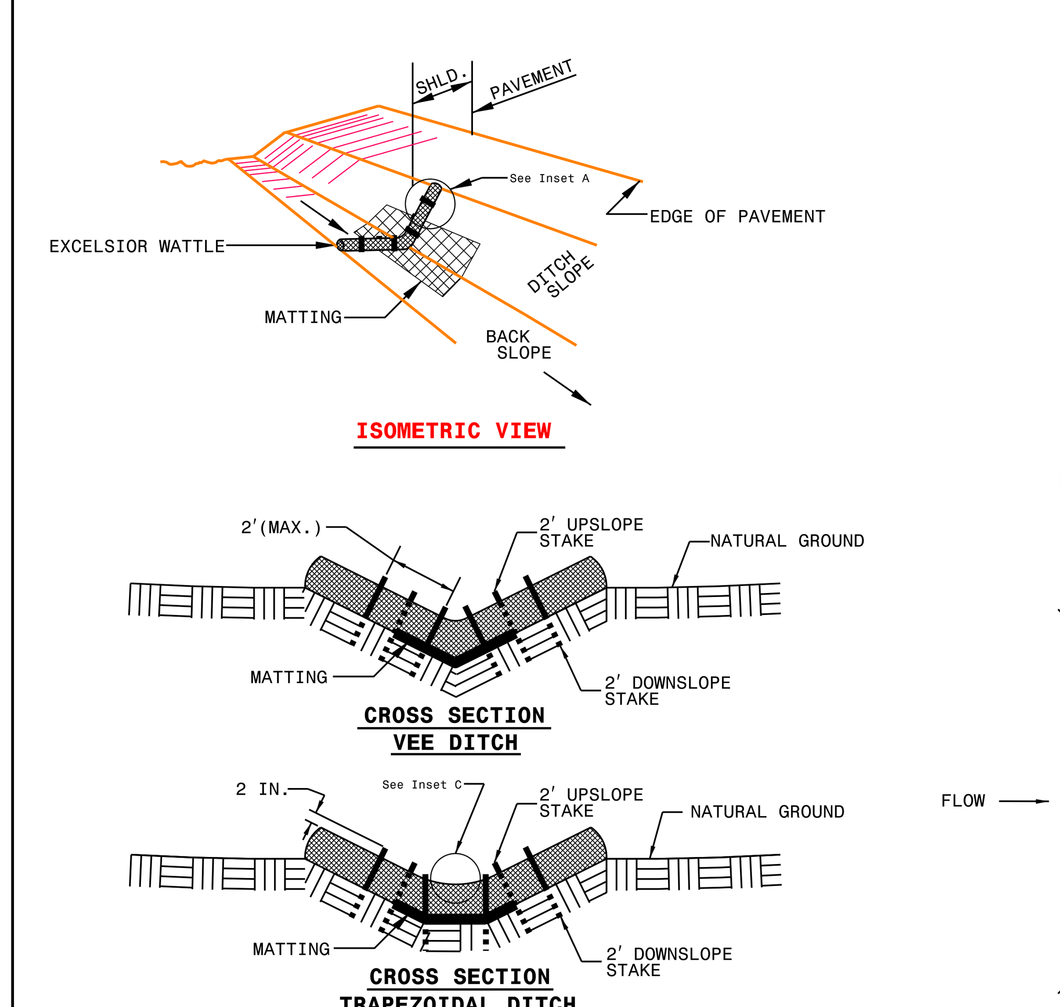

NOTES:

USE MINIMUM 12 IN. DIAMETER EXCELSIOR WATTLE.
USE 2 FT. WOODEN STAKES WITH A 2 IN. BY 2 IN. CROSS SECTION.
INSTALL A MINIMUM OF 2 UPSLOPE STAKES AND 4 DOWNSLOPE STAKES AT AN ANGLE TO WEDGE WATTLE TO BOTTOM OF DITCH.
PROVIDE STAPLES MADE OF 0.125 IN. DIAMETER STEEL WIRE FORMED INTO A U SHAPE NOT LESS THAN 12" IN LENGTH.
INSTALL STAPLES APPROXIMATELY EVERY 1 LINEAR FOOT ON BOTH SIDES OF WATTLE AND AT EACH END TO SECURE IT TO THE SOIL.
INSTALL MATTING IN ACCORDANCE WITH SECTION 1631 OF THE STANDARD SPECIFICATIONS.
PRIOR TO POLYACRYLAMIDE (PAM) APPLICATION, OBTAIN A SOIL SAMPLE FROM PROJECT LOCATION, AND FROM OFFSITE MATERIAL, AND ANALYZE FOR APPROPRIATE PAM FLOCCULANT TO BE APPLIED TO EACH WATTLE, EXCEPT ON LAST MEASURE.
INITIALLY APPLY 3.5 OUNCES OF ANIONIC OR NEUTRALLY CHARGED POLYACRYLAMIDE (PAM) OVER WATTLE WHERE WATER WILL FLOW AND AFTER EVERY RAINFALL EVENT THAT IS EQUAL TO OR EXCEEDS 0.50 IN.

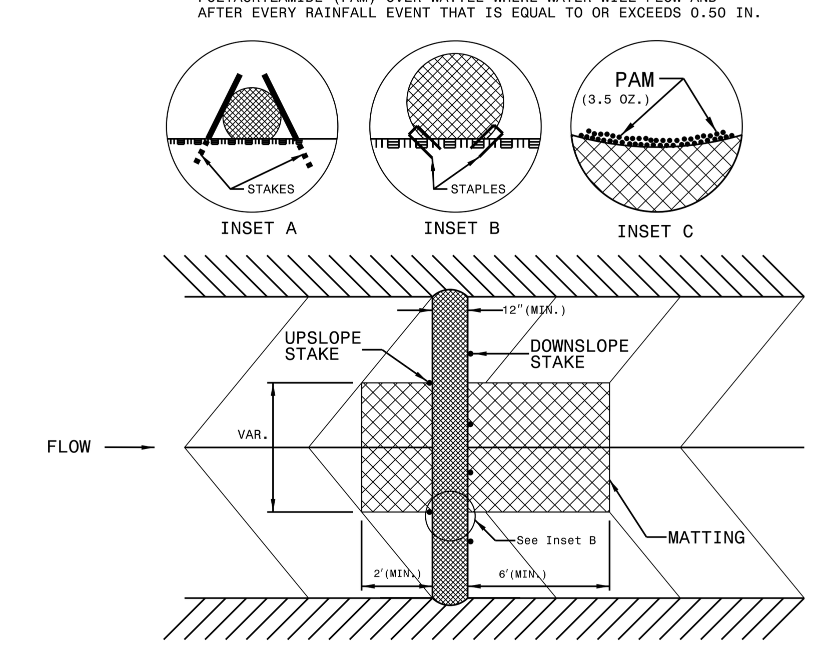

MILL & PATCH METHOD
FULL DEPTH FLOWABLE FILL
SPECIAL DETAIL

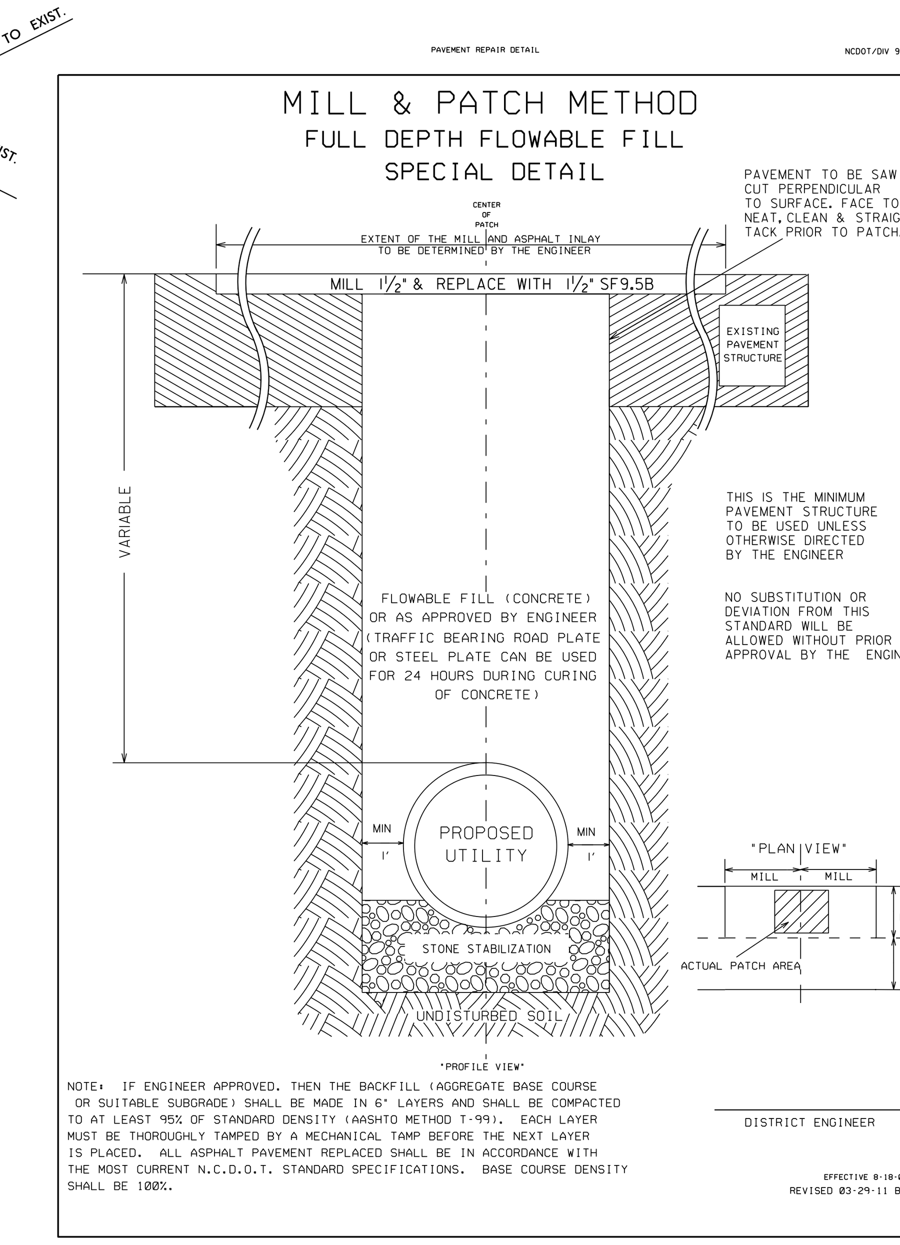

PAVEMENT STRUCTURE

C1	PROP. APPROX. 1-1/2" ASPHALT CONCRETE SURFACE COURSE, TYPE S9.5B, AT AN AVERAGE RATE OF 112 LBS. PER IN. PER SQ. YD.
D1	PROP. APPROX. 4 " ASPHALT CONCRETE INTERMEDIATE COURSE, TYPE I19.0B, AT AN AVERAGE RATE OF 114 LBS. PER IN. PER SQ. YD.
E1	PROP. APPROX. 5-1/2" ASPHALT CONCRETE BASE COURSE, TYPE B25.0 B, AT AN AVERAGE RATE OF 114 LBS. PER IN. PER SQ. YD.
R1	2'-6" STANDARD CONCRETE CURB AND GUTTER (STD. 846.01)
M	2' CURB REVEAL
U	EXISTING PAVEMENT
T	EARTH; SHOULDER (2'-3')
NOTE:	