09/08/99

TIP PROJECT: BD-5109I

CONTRACT: DI00023

See Sheet 1-A For Index of Sheets
See Sheet 1-B For Symbology Sheet

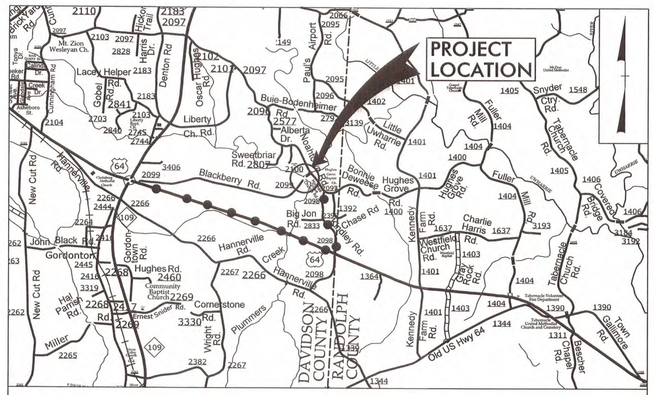


VICINITY MAP

DETOUR ROUTE

# STATE OF NORTH CAROLINA
# DIVISION OF HIGHWAYS

# DAVIDSON COUNTY

| STATE | STATE PROJECT REFERENCE NO. | SHEET NO. | TOTAL SHEETS |
|---|---|---|---|
| N.C. | BD-5109I | 1 | |

| STATE PROJ. NO. | F. A. PROJ. NO. | DESCRIPTION |
|---|---|---|
| 45355.1.9 | BRZ-2099(1) | PE |
| 45355.2.9 | BRZ-2099(1) | R/W, UTILITIES |
| 45355.3.9 | BRZ-2099(1) | CONST. |

***LOCATION: REPLACE EXISTING BRIDGE NO. 349 WITH CORED SLAB BRIDGE SR 2099 – BLACKBERRY RD.***

***TYPE OF WORK: GRADING, DRAINAGE, WIDENING, CORED SLAB BRIDGE AND PAVEMENT MARKINGS***

NAD 83
NC GRID

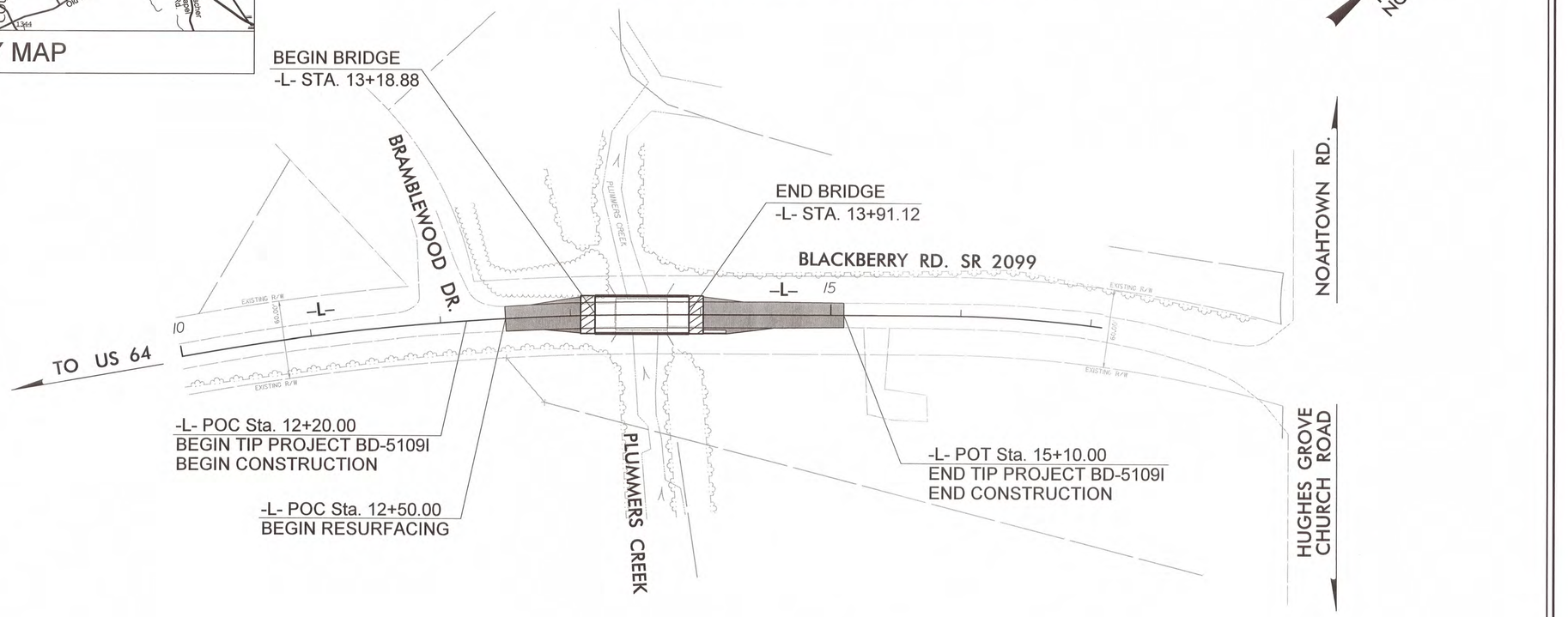


***GRAPHIC SCALES***

50 25 0 50 100
PLANS

50 25 0 50 100
PROFILE (HORIZONTAL)

10 5 0 10 20
PROFILE (VERTICAL)

***DESIGN DATA***

ADT 2009 = 780
V = 45 MPH

***PROJECT LENGTH***

| | | |
|---|---|---|
| LENGTH ROADWAY TIP PROJECT BD-5109I | = | 0.041 MI |
| LENGTH STRUCTURE TIP PROJECT BD-5109I | = | 0.014 MI |
| TOTAL LENGTH TIP PROJECT BD-5109I | = | 0.055 MI |

PLANS PREPARED BY:
**PARSONS BRINCKERHOFF**
434 FAYETTEVILLE STREET
SUITE 1500
RALEIGH, NC 27601
LICENSE NO. F-0165

*2012 STANDARD SPECIFICATIONS*

***RIGHT OF WAY DATE:***
FEBRUARY 21, 2012

***LETTING DATE:***
OCTOBER 9, 2013

***NCDOT CONTACT:*** MATTHEW JONES, PE
*DIVISION BRIDGE – PROGRAM MANAGER*

PLANS PREPARED FOR:
***DIVISION OF HIGHWAYS***
*1000 Birch Ridge Dr.*
*Raleigh NC, 27610*

TIM HAYES, PE
*PROJECT ENGINEER*

ERIC MISAK
*PROJECT DESIGN ENGINEER*

***HYDRAULICS ENGINEER***

NORTH CAROLINA PROFESSIONAL SEAL 032312 ENGINEER CHARLES W. HEARNE
*SIGNATURE:* 8-20-2013 *P.E.*

***ROADWAY DESIGN ENGINEER***

NORTH CAROLINA PROFESSIONAL SEAL 18963 ENGINEER TIMOTHY SCOTT HAYES
*SIGNATURE:* 8/21/13 *P.E.*

***DIVISION OF HIGHWAYS***
***STATE OF NORTH CAROLINA***

STATE OF NORTH CAROLINA DEPARTMENT OF TRANSPORTATION

*P.E.*
*STATE HIGHWAY DESIGN ENGINEER*

4:24:15 PM
BD-5109I_Rdy_tsh.dgn
8/20/2013

| PROJECT REFERENCE NO. | SHEET NO. |
|---|---|
| BD-5109I | 1-A |

ROADWAY DESIGN ENGINEER
NORTH CAROLINA PROFESSIONAL SEAL 19563 ENGINEER TIMOTHY SCOTT HAYES
8/27/13

INDEX OF SHEETS

| SHEET NUMBER | SHEET |
|---|---|
| 1 | TITLE SHEET |
| 1-A | INDEX OF SHEETS, GENERAL NOTES AND LIST OF STANDARD DRAWINGS |
| 1-B | CONVENTIONAL SYMBOLS |
| 1-C | SURVEY CONTROL SHEET |
| 2 | PAVEMENT SCHEDULE, TYPICAL SECTIONS, AND WEDGING DETAILS |
| 2-A | STRUCTURE ANCHOR UNIT TYPE III |
| 3 | SUMMARY OF QUANTITIES |
| 3-A | SUMMARY OF DRAINAGE QUANTITIES<br>SUMMARY OF GUARDRAIL, EARTHWORK<br>SUMMARY, ASPHALT PAVEMENT REMOVAL<br>SUMMARY AND SHOULDER BERM GUTTER SUMMARY |
| 4 | PLAN AND PROFILE SHEET |
| TCP-1 THRU TCP-2 | TRAFFIC CONTROL PLANS |
| EC-1 THRU EC-2 | EROSION CONTROL PLANS |
| UC-1 THRU UC-2 | UTILITY CONSTRUCTION PLANS |
| X-1 THRU X-2 | CROSS-SECTIONS |
| S-1 THRU S-12<br>SN | STRUCTURE PLANS<br>STRUCTURE STANDARD NOTES |

2012 ROADWAY ENGLISH STANDARD DRAWINGS

The following Roadway Standards as appear in "Roadway Standard Drawings" Highway Design Branch - N. C. Department of Transportation - Raleigh, N. C., Dated January, 2012 are applicable to this project and by reference hereby are considered a part of these plans:

| STD.NO. | TITLE |
|---|---|
| DIVISION 2 - EARTHWORK | |
| 200.03 | Method of Clearing - Method III |
| 225.02 | Guide for Grading Subgrade - Secondary and Local |
| 225.04 | Method of Obtaining Superelevation - Two Lane Pavement |
| DIVISION 3 - PIPE CULVERTS | |
| 300.01 | Method of Pipe Installation |
| DIVISION 4 - MAJOR STRUCTURES | |
| 422.11 | Reinforced Bridge Approach Fills - Sub Regional Tier |
| DIVISION 5 - SUBGRADE, BASES AND SHOULDERS | |
| 560.01 | Method of Shoulder Construction - High Side of Superelevated Curve - Method I |
| DIVISION 8 - INCIDENTALS | |
| 815.03 | Pipe Underdrain and Blind Drain |
| 840.00 | Concrete Base Pad for Drainage Structures |
| 840.25 | Anchorage for Frames - Brick or Concrete or Precast |
| 840.29 | Frames and Narrow Slot Flat Grates |
| 840.35 | Traffic Bearing Grated Drop Inlet - for Cast Iron Double Frame and Grates |
| 840.66 | Drainage Structure Steps |
| 846.01 | Concrete Curb, Gutter and Curb & Gutter |
| 846.04 | Drop Inlet Installation in Shoulder Berm Gutter |
| 862.01 | Guardrail Placement |
| 862.02 | Guardrail Installation |
| 862.03 | Structure Anchor Units |
| 876.02 | Guide for Rip Rap at Pipe Outlets |

GENERAL NOTES:

2012 SPECIFICATIONS
EFFECTIVE: 01-17-12
REVISED: 11/01/11

GRADE LINE:
GRADING AND SURFACING:

THE GRADE LINES SHOWN DENOTE THE FINISHED ELEVATION OF THE PROPOSED SURFACING AT GRADE POINTS SHOWN ON THE TYPICAL SECTIONS. GRADE LINES MAY BE ADJUSTED AT THEIR BEGINNING AND ENDING AND AT STRUCTURES AS DIRECTED BY THE ENGINEER IN ORDER TO SECURE A PROPER TIE-IN.

CLEARING:

CLEARING ON THIS PROJECT SHALL BE PERFORMED TO THE LIMITS ESTABLISHED BY METHOD III.

SUPERELEVATION:

ALL CURVES ON THIS PROJECT SHALL BE SUPERELEVATED IN ACCORDANCE WITH STD. NO. 225.04 USING THE RATE OF SUPERELEVATION AND RUNOFF SHOWN ON THE PLANS. SUPERELEVATION IS TO BE REVOLVED ABOUT THE GRADE POINTS SHOWN ON THE TYPICAL SECTIONS.

SHOULDER CONSTRUCTION:

ASPHALT, EARTH, AND CONCRETE SHOULDER CONSTRUCTION ON THE HIGH SIDE OF SUPERELEVATED CURVES SHALL BE IN ACCORDANCE WITH STD. NO. 560.01.

UNDERDRAINS:

UNDERDRAINS SHALL BE CONSTRUCTED IN ACCORDANCE WITH STD. NO. 815.03 AT LOCATIONS DIRECTED BY THE ENGINEER.

GUARDRAIL:

THE GUARDRAIL LOCATIONS SHOWN ON THE PLANS MAY BE ADJUSTED DURING CONSTRUCTION AS DIRECTED BY THE ENGINEER. THE CONTRACTOR SHOULD CONSULT WITH THE ENGINEER PRIOR TO ORDERING GUARDRAIL MATERIAL.

END BENTS:

THE ENGINEER SHALL CHECK THE STRUCTURE END BENT PLANS, DETAILS, AND CROSS-SECTION PRIOR TO SETTING OF THE SLOPE STAKES FOR THE EMBANKMENT OR EXCAVATION APPROACHING A BRIDGE.

UTILITIES:

UTILITY OWNERS ON THIS PROJECT ARE: Energy United EMC - Forrest Crook (336)-236-8404
North State Telephone - Brad Wright (336)-886-3968
Time Warner Cable - Eric Vivod (336)-231-6109
Davidson Water, Inc. - Robert Walters (336)-731-2341

ANY RELOCATION OF EXISTING UTILITIES WILL BE ACCOMPLISHED BY OTHERS, EXCEPT AS SHOWN ON THE PLANS.

RIGHT-OF-WAY MARKERS:

ALL RIGHT-OF-WAY MARKERS ON THIS PROJECT SHALL BE PLACED BY CONTRACT.

8/17/99
4:16:49 PM
173418
PARSONS BRINCKERHOFF
N:\Design Services\NCDOT Operations On Call\173418E - Division 9 Low Impact Bridges\BD-5109I\BD-5109I\Roadway\Proj\BD-5109I.Rdy.1A.dgn

04/16/11

| PROJECT REFERENCE NO. | SHEET NO. |
|---|---|
| BD-5109I | 1-B |

***Note: Not to Scale***

****S.U.E. = Subsurface Utility Engineering***

STATE OF NORTH CAROLINA
DIVISION OF HIGHWAYS

# CONVENTIONAL PLAN SHEET SYMBOLS

## *BOUNDARIES AND PROPERTY:*

- State Line
- County Line
- Township Line
- City Line
- Reservation Line
- Property Line
- Existing Iron Pin — EIP
- Property Corner
- Property Monument — ECM
- Parcel/Sequence Number — 123
- Existing Fence Line
- Proposed Woven Wire Fence
- Proposed Chain Link Fence
- Proposed Barbed Wire Fence
- Existing Wetland Boundary — WLB
- Proposed Wetland Boundary — WLB
- Existing Endangered Animal Boundary — EAB
- Existing Endangered Plant Boundary — EPB
- Known Soil Contamination: Boundary or Site
- Potential Soil Contamination: Boundary or Site

## *BUILDINGS AND OTHER CULTURE:*

- Gas Pump Vent or U/G Tank Cap
- Sign — S
- Well — W
- Small Mine
- Foundation
- Area Outline
- Cemetery
- Building
- School
- Church
- Dam

## *HYDROLOGY:*

- Stream or Body of Water
- Hydro, Pool or Reservoir
- Jurisdictional Stream — JS
- Buffer Zone 1 — BZ 1
- Buffer Zone 2 — BZ 2
- Flow Arrow
- Disappearing Stream
- Spring
- Wetland
- Proposed Lateral, Tail, Head Ditch — FLOW
- False Sump

## *RAILROADS:*

- Standard Gauge — CSX TRANSPORTATION
- RR Signal Milepost — MILEPOST 35
- Switch — SWITCH
- RR Abandoned
- RR Dismantled

## *RIGHT OF WAY:*

- Baseline Control Point
- Existing Right of Way Marker
- Existing Right of Way Line
- Proposed Right of Way Line — RW
- Proposed Right of Way Line with Iron Pin and Cap Marker — RW
- Proposed Right of Way Line with Concrete or Granite Marker — RW
- Existing Control of Access — CA
- Proposed Control of Access — CA
- Existing Easement Line — E
- Proposed Temporary Construction Easement — E
- Proposed Temporary Drainage Easement — TDE
- Proposed Permanent Drainage Easement — PDE
- Proposed Permanent Drainage / Utility Easement — DUE
- Proposed Permanent Utility Easement — PUE
- Proposed Temporary Utility Easement — TUE
- Proposed Aerial Utility Easement — AUE
- Proposed Permanent Easement with Iron Pin and Cap Marker

## *ROADS AND RELATED FEATURES:*

- Existing Edge of Pavement
- Existing Curb
- Proposed Slope Stakes Cut — C
- Proposed Slope Stakes Fill — F
- Proposed Curb Ramp — CR
- Curb Cut Future Ramp — CCFR
- Existing Metal Guardrail
- Proposed Guardrail
- Existing Cable Guiderail
- Proposed Cable Guiderail
- Equality Symbol
- Pavement Removal

## *VEGETATION:*

- Single Tree
- Single Shrub
- Hedge
- Woods Line
- Orchard
- Vineyard — Vineyard

## *EXISTING STRUCTURES:*

MAJOR:

- Bridge, Tunnel or Box Culvert — CONC
- Bridge Wing Wall, Head Wall and End Wall — CONC WW

MINOR:

- Head and End Wall — CONC HW
- Pipe Culvert
- Footbridge
- Drainage Box: Catch Basin, DI or JB — CB
- Paved Ditch Gutter
- Storm Sewer Manhole — S
- Storm Sewer — S

## *UTILITIES:*

POWER:

- Existing Power Pole
- Proposed Power Pole
- Existing Joint Use Pole
- Proposed Joint Use Pole
- Power Manhole — P
- Power Line Tower
- Power Transformer
- U/G Power Cable Hand Hole
- H-Frame Pole
- Recorded U/G Power Line — P
- Designated U/G Power Line (S.U.E.*) — P

TELEPHONE:

- Existing Telephone Pole
- Proposed Telephone Pole
- Telephone Manhole — T
- Telephone Booth — T
- Telephone Pedestal — T
- Telephone Cell Tower
- U/G Telephone Cable Hand Hole — HH
- Recorded U/G Telephone Cable — T
- Designated U/G Telephone Cable (S.U.E.*) — T
- Recorded U/G Telephone Conduit — TC
- Designated U/G Telephone Conduit (S.U.E.*) — TC
- Recorded U/G Fiber Optics Cable — T FO
- Designated U/G Fiber Optics Cable (S.U.E.*) — T FO

WATER:

- Water Manhole — W
- Water Meter
- Water Valve
- Water Hydrant
- Recorded U/G Water Line — W
- Designated U/G Water Line (S.U.E.*) — W
- Above Ground Water Line — A/G Water

TV:

- TV Satellite Dish
- TV Pedestal — C
- TV Tower
- U/G TV Cable Hand Hole — HH
- Recorded U/G TV Cable — TV
- Designated U/G TV Cable (S.U.E.*) — TV
- Recorded U/G Fiber Optic Cable — TV FO
- Designated U/G Fiber Optic Cable (S.U.E.*) — TV FO

GAS:

- Gas Valve
- Gas Meter
- Recorded U/G Gas Line — G
- Designated U/G Gas Line (S.U.E.*) — G
- Above Ground Gas Line — A/G Gas

SANITARY SEWER:

- Sanitary Sewer Manhole
- Sanitary Sewer Cleanout
- U/G Sanitary Sewer Line — SS
- Above Ground Sanitary Sewer — A/G Sanitary Sewer
- Recorded SS Forced Main Line — FSS
- Designated SS Forced Main Line (S.U.E.*) — FSS

MISCELLANEOUS:

- Utility Pole
- Utility Pole with Base
- Utility Located Object
- Utility Traffic Signal Box — S
- Utility Unknown U/G Line — ?UTL
- U/G Tank; Water, Gas, Oil
- Underground Storage Tank, Approx. Loc. — UST
- A/G Tank; Water, Gas, Oil
- Geoenvironmental Boring
- U/G Test Hole (S.U.E.*)
- Abandoned According to Utility Records — AATUR
- End of Information — E.O.I.

12/01/2005

| PROJECT REFERENCE NO. | SHEET NO. |
|---|---|
| BD-5109I | 1-C |
| Location and Surveys | |

# BD-5109I SURVEY CONTROL SHEET

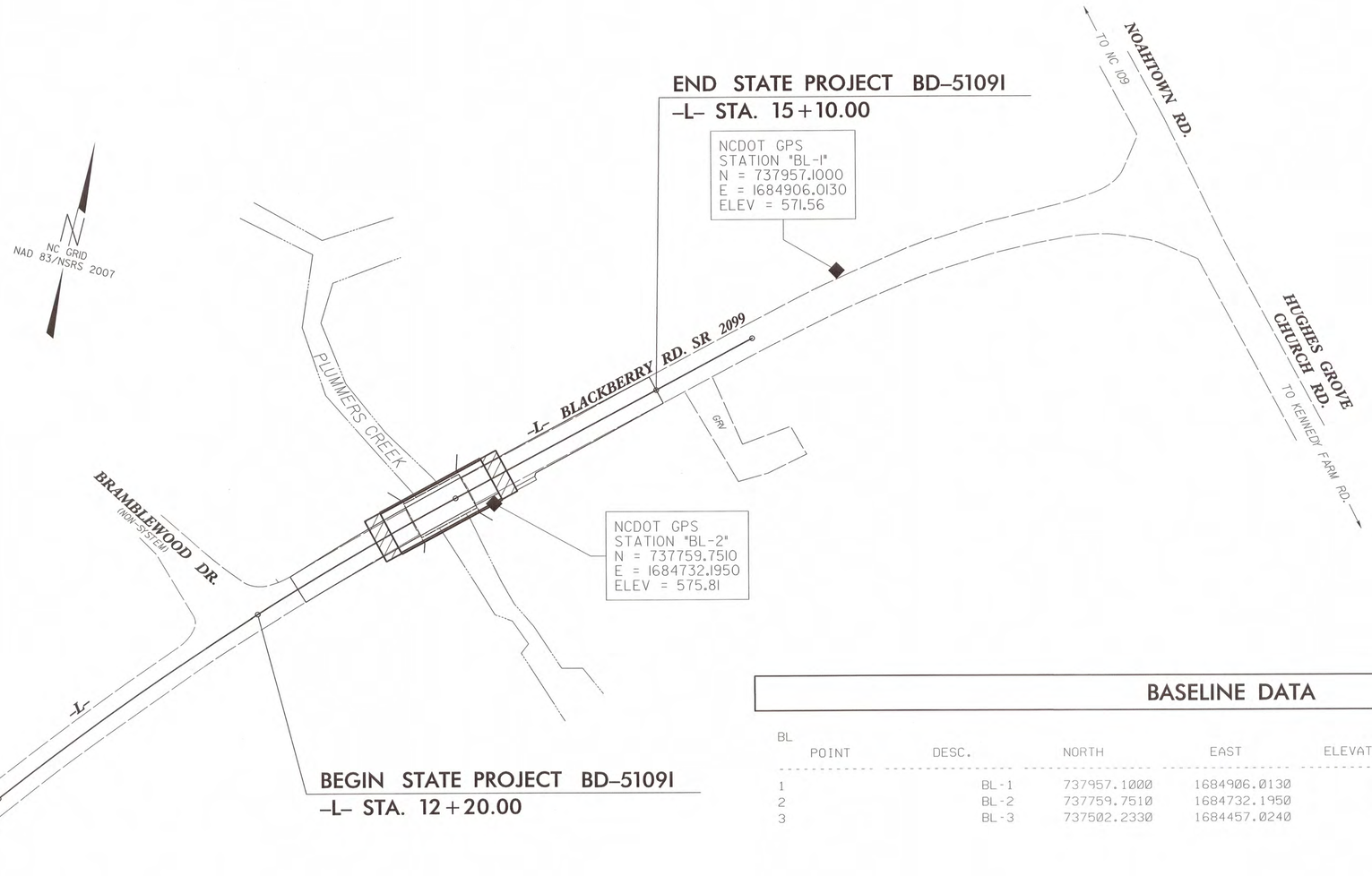


## BASELINE DATA

| BL POINT | DESC. | NORTH | EAST | ELEVATION | L STATION | OFFSET |
|---|---|---|---|---|---|---|
| 1 | BL-1 | 737957.1000 | 1684906.0130 | 571.56 | OUTSIDE PROJECT LIMITS | |
| 2 | BL-2 | 737759.7510 | 1684732.1950 | 575.81 | 13+85.28 | 14.51 RT |
| 3 | BL-3 | 737502.2330 | 1684457.0240 | 603.66 | 10+09.08 | 14.70 LT |

## DATUM DESCRIPTION

THE LOCALIZED COORDINATE SYSTEM DEVELOPED FOR THIS PROJECT IS BASED ON THE STATE PLANE COORDINATES ESTABLISHED BY NCDOT FOR MONUMENT "BL-2"
WITH NAD 83/NSRS 2007 STATE PLANE GRID COORDINATES OF
NORTHING: 737759.751(ft) EASTING: 1684732.195(ft)
ELEVATION: 575.81(ft)
THE AVERAGE COMBINED GRID FACTOR USED ON THIS PROJECT (GROUND TO GRID) IS: 0.999891385
THE N.C. LAMBERT GRID BEARING AND LOCALIZED HORIZONTAL GROUND DISTANCE FROM "BL-2" TO -L- STATION 10+00.00 IS
S 44° 30' 29.6" W 383.72 (ft)
ALL LINEAR DIMENSIONS ARE LOCALIZED HORIZONTAL DISTANCES
VERTICAL DATUM USED IS NAVD 88

## NOTES

1. *THE CONTROL DATA FOR THIS PROJECT CAN BE FOUND ELECTRONICALLY BY SELECTING PROJECT CONTROL DATA AT:*
   *HTTP://WWW.DOH.DOT.STATE.NC.US/PRECONSTRUCT/HIGHWAY/LOCATION/PROJECT/*

   *THE FILES TO BE FOUND ARE AS FOLLOWS:*
   *bd5109i_ls_control.txt*

   *SITE CALIBRATION INFORMATION HAS NOT BEEN PROVIDED FOR THIS PROJECT. IF FURTHER INFORMATION IS NEEDED, PLEASE CONTACT THE LOCATION AND SURVEYS UNIT.*

△ *INDICATES GEODETIC CONTROL MONUMENTS USED OR SET FOR HORIZONTAL PROJECT CONTROL BY THE NCDOT LOCATION AND SURVEYS UNIT.*
*PROJECT CONTROL ESTABLISHED USING GLOBAL POSITIONING SYSTEM.*
*NETWORK ESTABLISHED FROM NGS ONLINE POSITIONING SERVICE (OPUS)*

*NOTE: DRAWING NOT TO SCALE*

I:\5541\PM\bd5109i_LS_1c.dgn
8/20/2013

6/2/99

| PROJECT REFERENCE NO. | SHEET NO. |
|---|---|
| BD-5109I | 2 |

ROADWAY DESIGN ENGINEER

NORTH CAROLINA PROFESSIONAL SEAL 19563 ENGINEER TIMOTHY SCOTT HAYES

PLANS PREPARED BY:

**PARSONS BRINCKERHOFF**
434 FAYETTEVILLE STREET
SUITE 1500
RALEIGH, NC 27601
LICENSE NO. F-0165

# PAVEMENT SCHEDULE

| | |
|---|---|
| CI | PROPOSED APPROX. 1 1/2" ASPHALT CONCRETE SURFACE COURSE, TYPE S9.5B, AT AN AVERAGE RATE OF 168 LBS. PER SQ. YARD. |
| C2 | PROPOSED VARIABLE DEPTH ASPHALT CONCRETE SURFACE COURSE, TYPE S9.5B, AT AN AVERAGE RATE OF 112 LBS. PER SQ. YARD, PER 1" DEPTH, TO BE PLACED IN LAYERS NOT LESS THAN 1 1/2" OR PROVIDE IN LAYERS GREATER THAN 2. |
| D2 | PROPOSED VARIABLE DEPTH ASPHALT CONCRETE INTERMEDIATE COURSE, TYPE 119.0B, AT AN AVERAGE RATE OF 114 LBS. PER SQ. YARD, PER 1" DEPTH, TO BE PLACED IN LAYERS NOT LESS THAN 2 1/2" OR GREATER THAN 4" IN DEPTH. |
| EI | PROPOSED APPROXIMATE 5 1/2" ASPHALT CONCRETE BASE COURSE, TYPE B25.0B, AT AN AVERAGE RATE OF 627 LBS. PER SQ. YARD. |
| E2 | PROPOSED VARIABLE DEPTH ASPHALT CONCRETE BASE COURSE, TYPE B25.0B, AT AN AVERAGE RATE OF 114 LBS. PER SQ. YARD, PER 1" DEPTH, TO BE PLACED IN LAYERS NOT LESS THAN 3" OR GREATER THAN 5 1/2" IN DEPTH. |
| RI | SHOULDER BERM GUTTER |
| T | EARTH MATERIAL |
| U | EXISTING PAVEMENT |
| W | WEDGING DETAIL |

NOTE: ALL PAVEMENT EDGE SLOPES ARE 1:1 UNLESS OTHERWISE SHOWN.

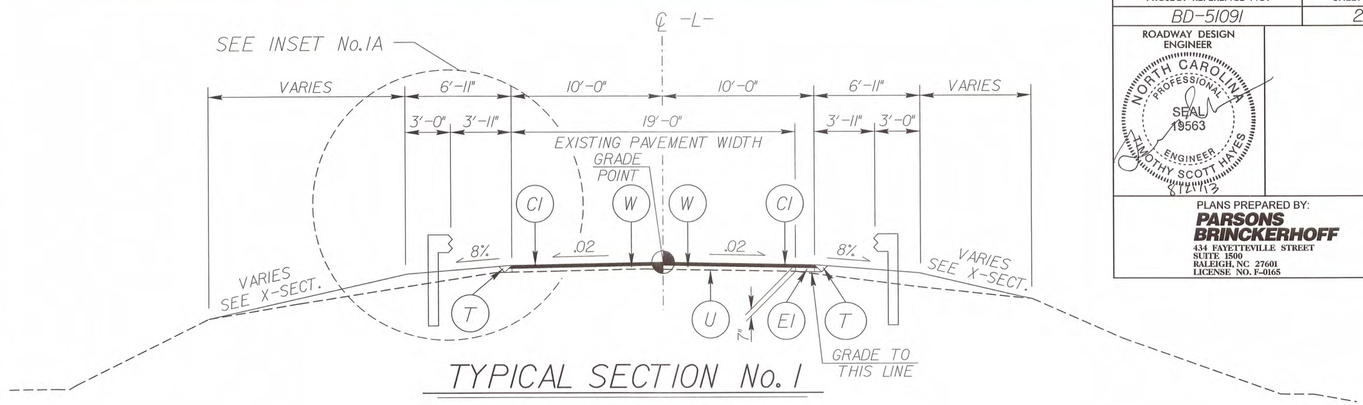


## TYPICAL SECTION No. 1

USE TYPICAL SECTION No.1 AS FOLLOWS:

TRANSITION FROM EXISTING TO T.S.NO.1 FROM -L- STA.12+50.00 TO -L- STA.13+00.00
FROM -L- STA.13+00.00 TO -L- STA.13+18.88 (BEGIN BRIDGE)
FROM -L- STA.14+19.62 TO -L- STA.14+60.00
TRANSITION FROM T.S.NO.1 TO EXISTING FROM -L- STA.14+60.00 TO -L- STA.15+10.00

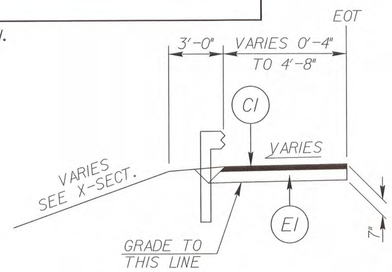


## INSET No.1A

(SEE PLANS FOR PAVED SHOULDER LOCATION)

USE INSET No.1A IN CONJUCTION W/TYPICAL SECTION No.1 AS FOLLOWS:

FROM -L- STA.12+69.64 (LT.) TO -L- STA.13+08.27 (LT.)
FROM -L- STA.12+79.19 (RT.) TO -L- STA.13+07.47 (RT.)
FROM -L- STA.14+02.12 (LT.) TO -L- STA.14+33.45 (LT.)
FROM -L- STA.14+19.62 (RT.) TO -L- STA.14+56.29 (RT.)

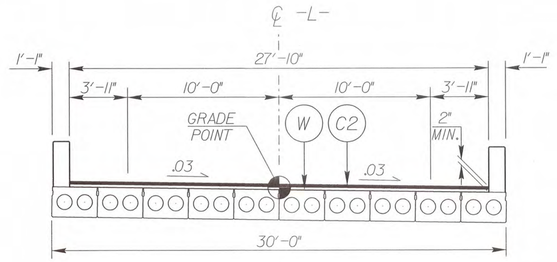


## TYPICAL SECTION No. 2

USE TYPICAL SECTION No.2 AS FOLLOWS:

FROM -L- STA.13+18.88 (BEGIN BRIDGE) TO -L- STA.13+91.12 (END BRIDGE)

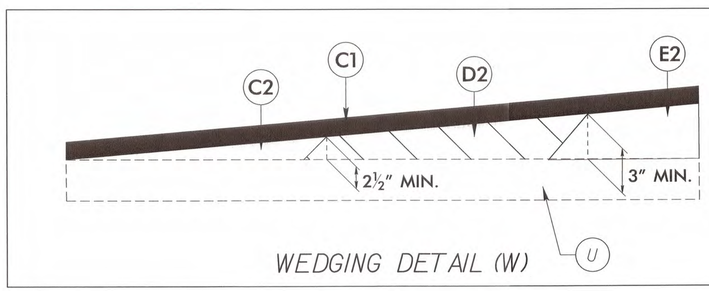


WEDGING DETAIL (W)

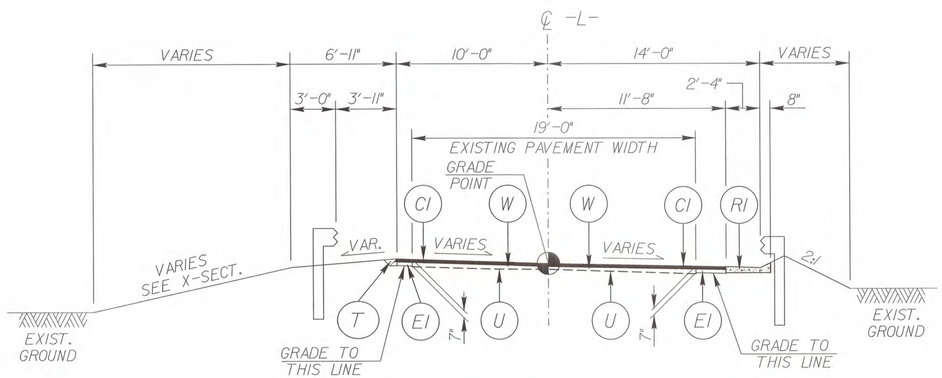


## TYPICAL SECTION No. 3

USE TYPICAL SECTION No.3 AS FOLLOWS:

FROM -L- STA.13+91.12 (END BRIDGE) TO -L- STA.14+19.62

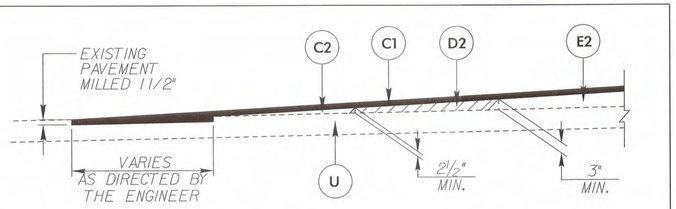


## MILLING DETAIL FOR PROFILE CONNECTIONS

TYING PROPOSED PAVEMENTS TO EXISTING PAVEMENTS

4:22:47 PM
BD5109I-Rdy-typ.dgn
6/2/2013

STATE OF NORTH CAROLINA
DEPT. OF TRANSPORTATION
DIVISION OF HIGHWAYS
RALEIGH, N.C.

ENGLISH DETAIL DRAWING FOR
**STRUCTURE ANCHOR UNITS**
GUARDRAIL ANCHOR UNIT, TYPE III FOR ATTACHMENT TO
RAIL ON BRIDGE - SUB REGIONAL TIER

SHEET 2 OF 7
**862d03**

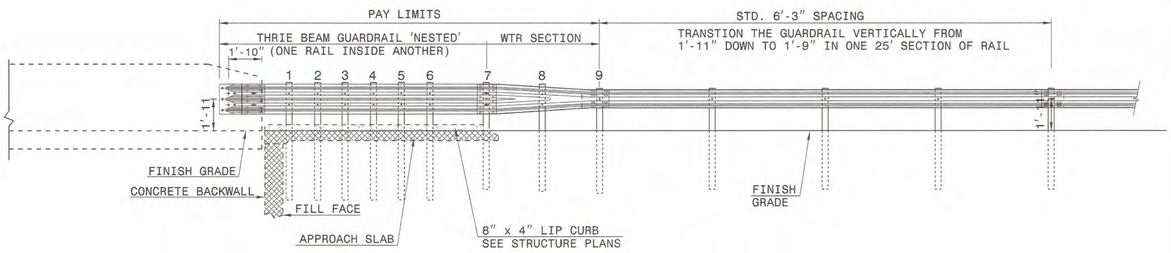


**ELEVATION**

NOTE:
**POST NOT REQUIRED FOR SKEW ANGLES GREATER THAN 150° OR LESS THAN 30° UNLESS OTHERWISE DIRECTED BY THE ENGINEER.
*THE DISTANCE FROM END OF BRIDGE RAIL TO CENTER LINE OF THE FIRST POST SHOULD BE 11½" IF CONCRETE BACKWALL IS NOT PRESENT.
-SHOULDER BERM GUTTER MUST BE INSTALLED TO THE LIMITS 8" x 4" LIP CURB IS SHOWN IF ANCHOR UNIT IS NOT ADJACENT TO AN APPROACH SLAB.
-MEASURE GUARDRAIL HEIGHT FROM THE TOP OF ADJACENT SURFACE (SHOULDER, BERM, OR GUTTER).
-LAP JOINTS IN THE DIRECTION OF TRAFFIC FLOW.
-SEE SHEET 5 FOR POST SECTIONS 1 THRU 9.

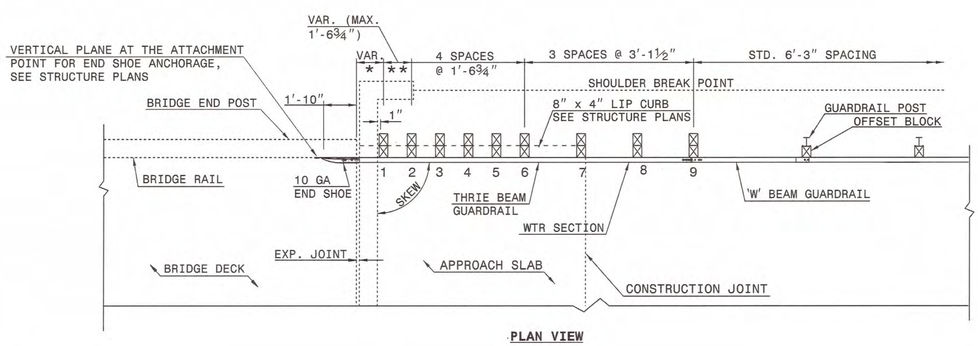


**PLAN VIEW**

## GUARDRAIL ANCHOR UNIT, TYPE III FOR ATTACHMENT TO RAIL ON BRIDGE - SUB REGIONAL TIER

STATE OF NORTH CAROLINA
DEPT. OF TRANSPORTATION
DIVISION OF HIGHWAYS
RALEIGH, N.C.

ENGLISH DETAIL DRAWING FOR
**STRUCTURE ANCHOR UNITS**
GUARDRAIL ANCHOR UNIT, TYPE III FOR ATTACHMENT TO
RAIL ON BRIDGE - SUB REGIONAL TIER

SHEET 2 OF 7
862d03

STATE OF NORTH CAROLINA
DEPT. OF TRANSPORTATION
DIVISION OF HIGHWAYS
RALEIGH, N.C.

ENGLISH DETAIL DRAWING FOR
**STRUCTURE ANCHOR UNITS**
GUARDRAIL ANCHOR UNIT, TYPE III

SHEET 3 OF 7
862d03

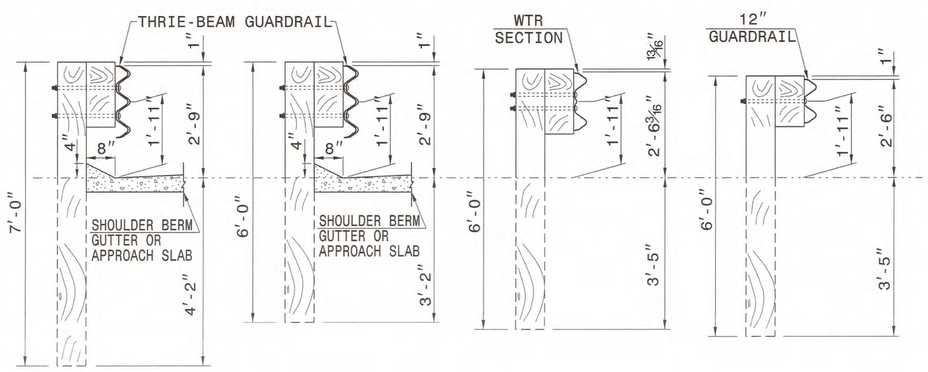


**SECTION OF THRIE BEAM POSTS 1 THRU 6** | **SECTION OF THRIE BEAM POST 7** | **SECTION OF WTR BEAM POST 8** | **SECTION OF 'W' BEAM POST 9**

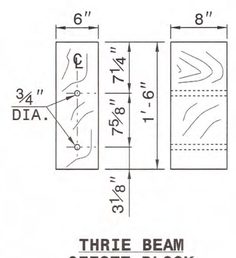


**THRIE BEAM OFFSET BLOCK**

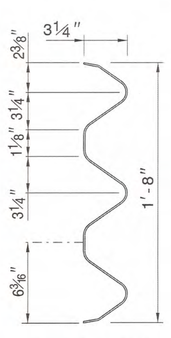


**THRIE-BEAM SECTION**

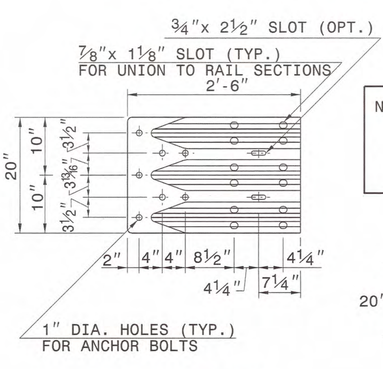


**END SHOE**

NOTE: THE MID POST AND OFFSET BLOCK OF THE WTR SECTION WILL REQUIRE SPECIAL BOLT HOLE DRILLING IN THE THRIE BEAM OFFSET BLOCK AND LINE POST.

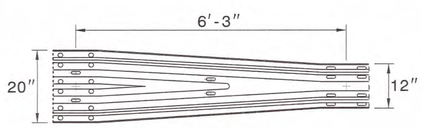


**WTR SECTION**
ELEVATION VIEW

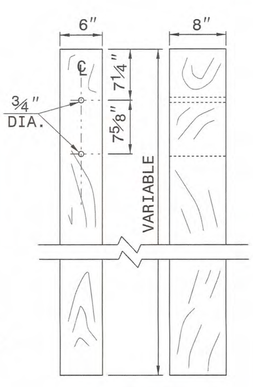


**THRIE BEAM LINE POST**

PROJECT REFERENCE NO.
BD-5109

SHEET NO.
2-A

8/17/99

| PROJECT REFERENCE NO. | SHEET NO. |
|---|---|
| BD-5109I | 3 |

ROADWAY DESIGN ENGINEER

NORTH CAROLINA PROFESSIONAL SEAL 19563 ENGINEER TIMOTHY SCOTT HAYES 8/27/13

PLANS PREPARED BY:

**PARSONS BRINCKERHOFF**
434 FAYETTEVILLE STREET
SUITE 1500
RALEIGH, NC 27601
LICENSE NO. F-0165

| ITEM | SECT | QUANTITY | UNIT | ITEM DESCRIPTION |
|---|---|---|---|---|
| 0000100000-N | 800 | 1 | LS | MOBILIZATION |
| 0000400000-N | 801 | 1 | LS | CONSTRUCTION SURVEYING |
| 0030000000-N | SP | 1 | LS | BRIDGE APPROACH FILL - SUB REGIONAL TIER STATION 13+55.00 |
| 0043000000-N | 226 | 1 | LS | GRADING |
| 0318000000-E | 300 | 10 | TON | FOUNDATION CONDITIONING MATERIAL, MINOR STRUCTURES |
| 0320000000-E | 300 | 20 | SY | FOUNDATION CONDITIONING GEOTEXTILE |
| 0582000000-E | 310 | 34 | LF | 15" CS PIPE CULVERTS, 0.064" THICK |
| 0636000000-E | 310 | 2 | EA | 15" CS PIPE ELBOWS, 0.064" THICK |
| 1489000000-E | 610 | 110 | TON | ASPHALT CONC BASE COURSE, TYPE B25.0B |
| 1498000000-E | 610 | 10 | TON | ASPHALT CONC INTERMEDIATE COURSE, TYPE I19.0B |
| 1519000000-E | 610 | 80 | TON | ASPHALT CONC SURFACE COURSE, TYPE S9.5B |
| 1575000000-E | 620 | 15 | TON | ASPHALT BINDER FOR PLANT MIX |
| 2000000000-N | 806 | 9 | EA | RIGHT OF WAY MARKERS |
| 2286000000-N | 840 | 1 | EA | MASONRY DRAINAGE STRUCTURES |
| 2367000000-N | 840 | 1 | EA | FRAME WITH TWO GRATES, STD 840.29 |
| 2556000000-E | 846 | 18 | LF | SHOULDER BERM GUTTER |
| 3030000000-E | 862 | 25 | LF | STEEL BM GUARDRAIL |
| 3150000000-N | 862 | 5 | EA | ADDITIONAL GUARDRAIL POSTS |
| 3215000000-N | 862 | 4 | EA | GUARDRAIL ANCHOR UNITS, TYPE III |
| 3270000000-N | SP | 4 | EA | GUARDRAIL ANCHOR UNITS, TYPE 350 |
| 3649000000-E | 876 | 25 | TON | RIP RAP, CLASS B |
| 3656000000-E | 876 | 65 | SY | GEOTEXTILE FOR DRAINAGE |
| 4400000000-E | 1110 | 151 | SF | WORK ZONE SIGNS (STATIONARY) |
| 4410000000-E | 1110 | 94 | SF | WORK ZONE SIGNS (BARRICADE MOUNTED) |
| 4420000000-N | 1120 | 2 | EA | PORTABLE CHANGEABLE MESSAGE SIGN |
| 4445000000-E | 1145 | 64 | LF | BARRICADES (TYPE III) |
| 4810000000-E | 1205 | 2880 | LF | PAINT PAVEMENT MARKING LINES (4") |
| 5325800000-E | 1510 | 115 | LF | 8" WATER LINE |
| 5801000000-E | 1530 | 120 | LF | ABANDON 8" UTILITY PIPE |
| 6000000000-E | 1605 | 800 | LF | TEMPORARY SILT FENCE |
| 6009000000-E | 1610 | 25 | TON | STONE FOR EROSION CONTROL, CLASS B |
| 6012000000-E | 1610 | 25 | TON | SEDIMENT CONTROL STONE |
| 6015000000-E | 1615 | 0.5 | ACR | TEMPORARY MULCHING |
| 6018000000-E | 1620 | 50 | LB | SEED FOR TEMPORARY SEEDING |
| 6021000000-E | 1620 | 0.25 | TON | FERTILIZER FOR TEMPORARY SEEDING |
| 6024000000-E | 1622 | 200 | LF | TEMPORARY SLOPE DRAINS |
| 6029000000-E | SP | 100 | LF | SAFETY FENCE |
| 6030000000-E | 1630 | 40 | CY | SILT EXCAVATION |
| 6036000000-E | 1631 | 1200 | SY | MATTING FOR EROSION CONTROL |
| 6037000000-E | SP | 275 | SY | COIR FIBER MAT |
| 6042000000-E | 1632 | 70 | LF | 1/4" HARDWARE CLOTH |
| 6071010000-E | SP | 50 | LF | WATTLE |
| 6084000000-E | 1660 | 0.5 | ACR | SEEDING & MULCHING |
| 6117000000-N | SP | 10 | EA | RESPONSE FOR EROSION CONTROL |
| 8021000000-N | SP | 1 | LS | REMOVAL OF EXISTING STRUCTURE AT STATION 13+55.00 |
| 8121000000-N | 412 | 1 | LS | UNCLASSIFIED STRUCTURE EXCAVATION AT STATION 13+55.00 |
| 8182000000-E | 420 | 26.6 | CY | CLASS A CONCRETE (BRIDGE) |
| 8210000000-N | 422 | 1 | LS | BRIDGE APPROACH SLABS, STATION 13+55.00 |
| 8217000000-E | 425 | 3954 | LB | REINFORCING STEEL (BRIDGE) |
| 8364000000-E | 450 | 175 | LF | HP12X53 STEEL PILES |
| 8391000000-N | 450 | 10 | EA | STEEL PILE POINTS |
| 8505000000-E | 460 | 140.3 | LF | VERTICAL CONCRETE BARRIER RAIL |
| 8608000000-E | 876 | 257 | TON | RIP RAP CLASS II (2'-0" THICK) |
| 8622000000-E | 876 | 284 | SY | GEOTEXTILE FOR DRAINAGE |
| 8657000000-N | 430 | 1 | LS | ELASTOMERIC BEARINGS |
| 8763000000-E | 430 | 700 | LF | 3'-0" X 2'-0" PRESTRESSED CONC CORED SLABS |

3:46:39 PM
8/27/2013
BD-5109I_Rdy_3.dgn

12/06/07

| PROJECT REFERENCE NO. | SHEET NO. |
|---|---|
| BD-51091 | 3-A |

STATE OF NORTH CAROLINA
DIVISION OF HIGHWAYS

# LIST OF PIPES, ENDWALLS, ETC. (FOR PIPES 48" & UNDER)

| STATION | LOCATION (LT,RT, OR CL) | STRUCTURE NO. FROM. | STRUCTURE NO. TO | TOP ELEVATION | INVERT ELEVATION | INVERT ELEVATION | SLOPE CRITICAL | DRAINAGE PIPE (RCP, CSP, CAAP, HDPE, or PVC) 12" | 15" | 18" | 24" | 30" | 36" | 42" | 48" | C.S. PIPE (UNLESS NOTED OTHRWISE) .064 12" | .064 15" | .064 18" | .064 24" | .079 30" | .079 36" | .109 42" | .109 48" | CLASS III R.C. PIPE (UNLESS OTHERWISE NOTED) 12" | 15" | 18" | 24" | 30" | 36" | 42" | 48" | 15" SIDE DRAIN PIPE | 18" SIDE DRAIN PIPE | 24" SIDE DRAIN PIPE | ENDWALLS STD. 838.01, STD. 838.11 OR STD. 838.80 (UNLESS NOTED OTHERWISE) CU. YDS. R.C.P. | CU. YDS. C.S.P. | QUANTITIES FOR DRAINAGE STRUCTURES * TOTAL L.F. FOR PAY QUANTITY SHALL BE COL. 'A' + (1.3 X COL. 'B') LIN. FT. A | LIN. FT. B | PER EACH (0' THRU 5.0') | 5.0' THRU 10.0' | 10.0' AND ABOVE | C.B. STD. 840.01 OR STD. 840.02 | FRAME, GRATES AND HOOD STANDARD 840.03 TYPE OF GRATE E | F | G | D.I. STD. 840.14 OR STD. 840.15 | D.I. FRAME & GRATE STD. 840.16 | G.D.I. TYPE "A" STD. 840.17 OR 840.26 | G.D.I. TYPE "B" STD. 840.18 OR 840.27 | G.D.I. TYPE "D" STD. 840.19 OR 840.28 | G.D.I. FRAME WITH GRATE STD. 840.22 | G.D.I. FRAME WITH TWO GRATES STD. 840.22 | G.D.I. (N.S.) FRAME WITH GRATE STD. 840.29 | G.D.I. (N.S.) FRAME WITH TWO GRATES STD. 840.29 | J.B. STD. 840.31 OR 840.32 | T.B.D.I. STD. 840.35 | CORR. STEEL ELBOWS NO. & SIZE | CONC. COLLARS CL. "B" C.Y. STD. 840.72 | CONC. & BRICK PIPE PLUG, C.Y. STD. 840.71 | PIPE REMOVAL LIN.FT. | REMARKS |
|---|---|---

8/17/99

# DAVIDSON COUNTY
# LOW IMPACT BRIDGE

STRUCTURE 280349
LS 09-10-064
WBS 45555.1.9
TIP BD-5109I

| PROJECT REFERENCE NO. | SHEET NO. |
|---|---|
| BD-5109I | 4 |
| R/W SHEET NO. | |

ROADWAY DESIGN ENGINEER — NORTH CAROLINA PROFESSIONAL SEAL 19563 ENGINEER TIMOTHY SCOTT HAYES 4/10/13

HYDRAULICS ENGINEER — NORTH CAROLINA PROFESSIONAL SEAL 032112 ENGINEER CHARLES W. HEATHER 8-20-2013

PLANS PREPARED BY:
**PARSONS BRINCKERHOFF**
434 FAYETTEVILLE STREET
SUITE 1500
RALEIGH, NC 27601
LICENSE NO. F-0165

## CURVE DATA

PI Sta 11+92.21
Δ = 9° 57' 03.7" (RT)
D = 2° 51' 53.2"
L = 347.36'
T = 174.12'
R = 2,000.00'
e = 3%
Ds = 45mph

PI Sta 16+43.92
Δ = 7° 24' 41.3" (RT)
D = 5° 43' 46.5"
L = 129.35'
T = 64.77'
R = 1,000.00'

NAD 83 NSRS 2007 NC GRID

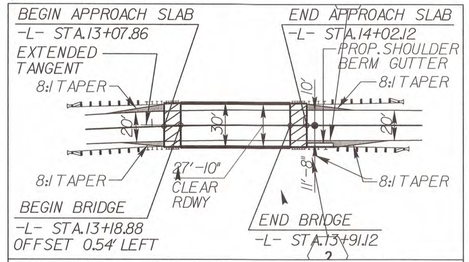


SKETCH SHOWING DIMENSION OF PAVEMENT AND SHOULDERS IN RELATION TO PROPOSED BRIDGE WIDTH

PAVED SHLD.

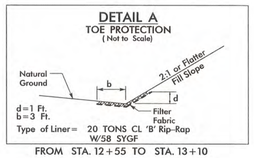


FROM STA. 12+55 TO STA. 13+10

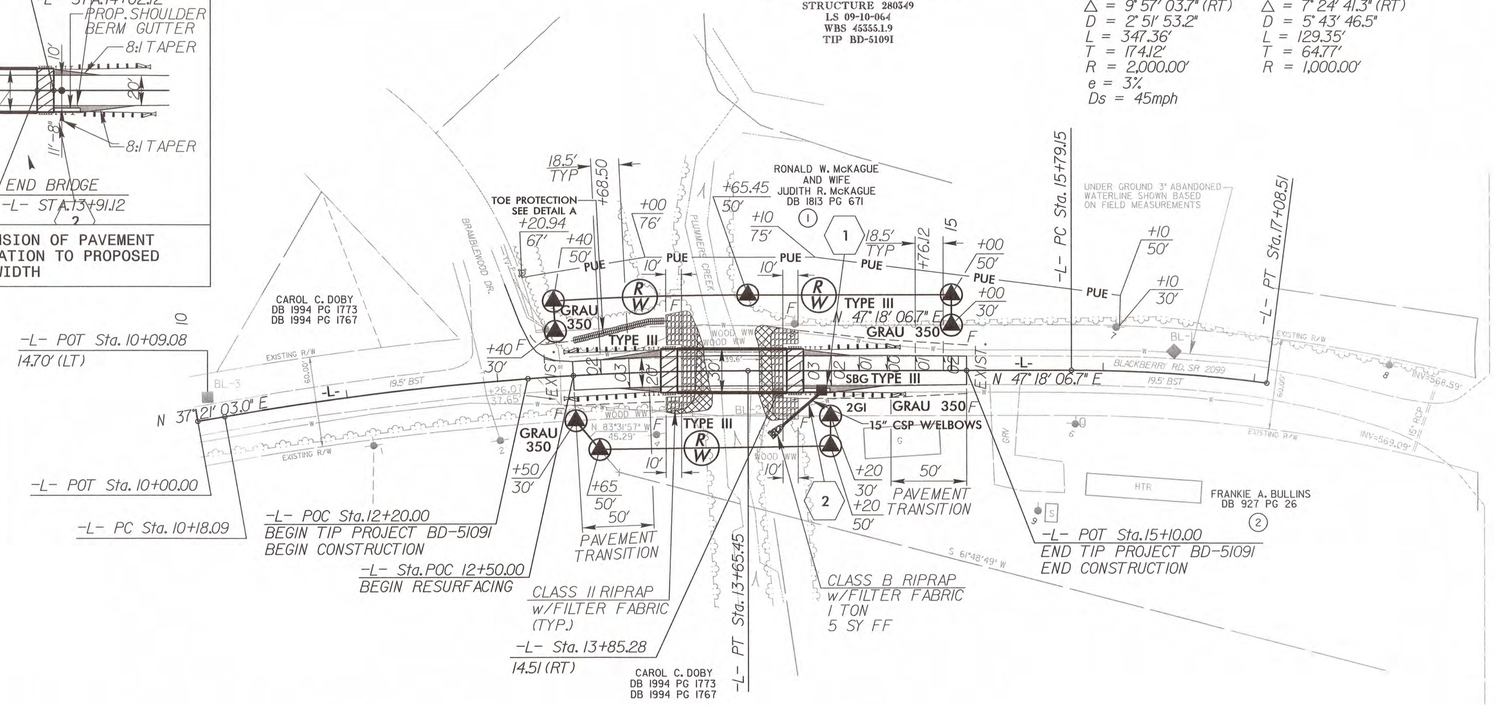


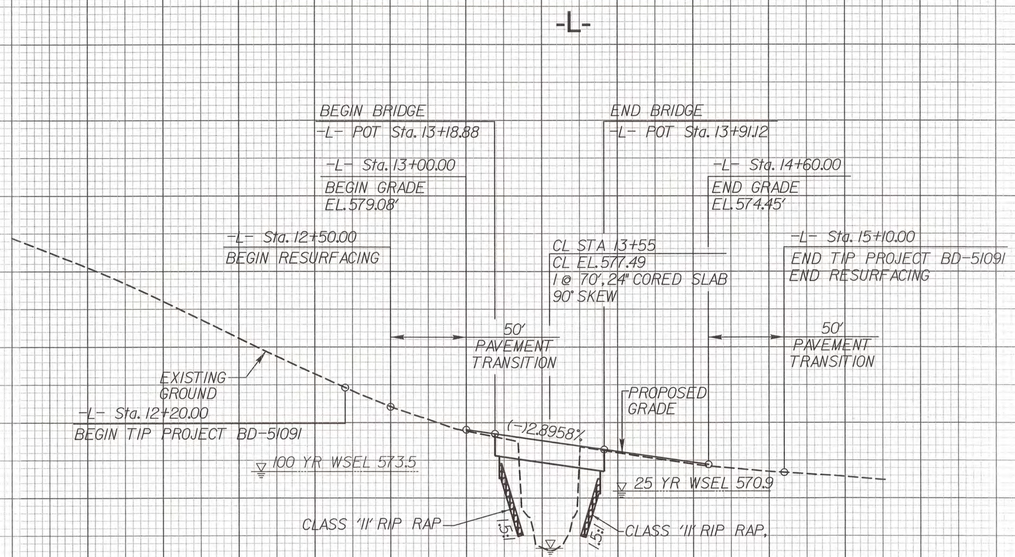


## BRIDGE HYDRAULIC DATA

| | | |
|---|---|---|
| DESIGN DISCHARGE | = 2000 | CFS |
| DESIGN FREQUENCY | = 25 | YRS |
| DESIGN HW ELEVATION | = 570.9 | FT |
| BASE DISCHARGE | = 2800 | CFS |
| BASE FREQUENCY | = 100 | YRS |
| BASE HW ELEVATION | = 573.5 | FT |
| OVERTOPPING DISCHARGE | = 2550 | CFS |
| OVERTOPPING FREQUENCY | = 50 + | YRS |
| OVERTOPPING ELEVATION | = 572.1 | FT |

d:\4102_PW_BD5109I\Rdy_psh_sheet4.dgn
8/20/2013 4:02:02 PM

BD-5109I

TIP PROJECT:

STATE OF NORTH CAROLINA
DIVISION OF HIGHWAYS

| STATE PROJECT REFERENCE NO. | SHEET NO. |
|---|---|
| BD-5109I | TCP-1 |

# PLAN FOR PROPOSED TRAFFIC CONTROL, MARKING & DELINEATION

# DAVIDSON COUNTY

## ROADWAY STANDARD DRAWINGS

THE FOLLOWING ROADWAY STANDARDS AS APPEAR IN "ROADWAY STANDARD DRAWINGS" - PROJECT SERVICES UNIT - N.C. DEPARTMENT OF TRANSPORTATION - RALEIGH, N.C., DATED JANUARY 2012 ARE APPLICABLE TO THIS PROJECT AND BY REFERENCE HEREBY ARE CONSIDERED A PART OF THESE PLANS:

| STD. NO. | TITLE |
|---|---|
| 1101.03 | TEMPORARY ROAD CLOSURES |
| 1101.11 | TRAFFIC CONTROL DESIGN TABLES |
| 1110.01 | STATIONARY WORK ZONE SIGNS |
| 1145.01 | BARRICADES |
| 1205.01 | PAVEMENT MARKINGS - LINE TYPES & OFFSETS |
| 1205.02 | PAVEMENT MARKINGS - 2 LANE & MULTILANE ROADWAYS |
| 1205.12 | PAVEMENT MARKINGS - BRIDGES |
| 1261.01 | GUARDRAIL & BARRIER DELINEATOR SPACING |
| 1261.02 | GUARDRAIL & BARRIER DELINEATOR TYPE |
| 1262.01 | GUARDRAIL END DELINEATION |

## INDEX OF SHEETS


| SHEET NO. | TITLE |
|---|---|
| TCP-1 | LIST OF APPLICABLE ROADWAY STANDARD DRAWINGS, LEGEND AND INDEX OF SHEETS |
| TCP-2 | GENERAL NOTES, PHASING AND DETOUR SIGNING |


## LEGEND

### GENERAL

- DIRECTION OF TRAFFIC FLOW
- NORTH ARROW
- PROPOSED PVMT. --------- EXIST. PVMT.
- WORK AREA
- MILL AND WEDGE
- REMOVAL OF EXISTING PAVEMENT

### TRAFFIC CONTROL DEVICES

- TYPE I BARRICADE
- TYPE II BARRICADE
- TYPE III BARRICADE
- CONE
- DRUM
- SKINNY DRUM
- FLASHING ARROW PANEL (TYPE C)
- STATIONARY SIGN
- PORTABLE SIGN
- STATIONARY OR PORTABLE SIGN
- CRASH CUSHION
- CHANGEABLE MESSAGE SIGN
- TRUCK MOUNTED IMPACT ATTENUATOR (TMIA)
- POLICE
- FLAGGER

### PAVEMENT MARKINGS

- CRYSTAL/CRYSTAL PAVEMENT MARKER
- YELLOW/YELLOW PAVEMENT MARKER
- CRYSTAL/RED PAVEMENT MARKER
- PAVEMENT MARKING SYMBOLS

APPROVED: _____
DATE: 8/20/13

SEAL

NORTH CAROLINA PROFESSIONAL SEAL 19563 ENGINEER TIMOTHY SCOTT HAYES


PARSONS BRINCKERHOFF
434 FAYETTEVILLE STREET
SUITE 1500
RALEIGH, NC 27601
LICENSE NO. F-0165

TIM HAYES, PE — PROJECT ENGINEER
ERIC MISAK — PROJECT DESIGN



3:38:18 PM
5109I_TC_TCP_TSH.dgn
8/16/2013

| PROJ. REFERENCE NO. | SHEET NO. |
|---|---|
| BD-5109I | TCP-2 |

**PARSONS BRINCKERHOFF**
434 FAYETTEVILLE STREET
SUITE 1500
RALEIGH, NC 27601
LICENSE NO. F-0165

A

R11-2
48" x 30"




TYPE III BARRICADE

C

| MESSAGE NO. 1 | MESSAGE NO. 2 |
|---|---|
| BRIDGE CLOSED 00/00/00 | FOR XXX DAYS |

CHANGEABLE MESSAGE SIGN

B

R11-4
60" x 30"




M4-10L
48" x 18"

TYPE III BARRICADE

D

R11-3
60" x 30"




M4-10R
48" x 18"

TYPE III BARRICADE

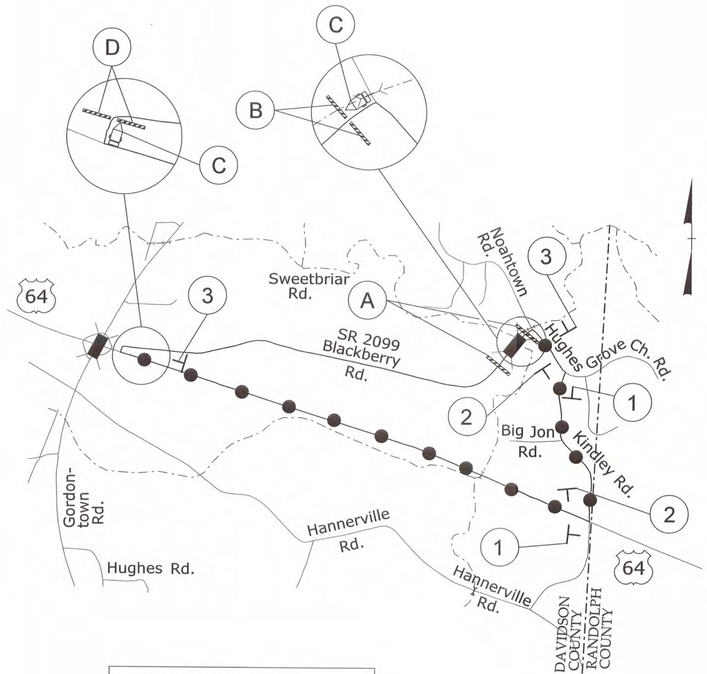


| PROPOSED DETOUR | |
|---|---|
| DETOUR ROUTE | |
| DETOUR LENGTH | 6.0 MILES |

1 DETOUR
M4-8
24" X 12"

M6-1 L
21" X 15"

3 END DETOUR
M4-8 A
24" X 18"

2 DETOUR
M4-8
24" X 12"

M6-1
21" X 15"

# GENERAL NOTES

CHANGES MAY BE REQUIRED WHEN PHYSICAL DIMENSIONS IN THE DETAIL DRAWINGS, STANDARD DETAILS, AND ROADWAY DETAILS ARE NOT ATTAINABLE TO MEET FIELD CONDITIONS OR RESULT IN DUPLICATE OR UNDESIRED OVERLAPPING OF DEVICES. MODIFICATION MAY INCLUDE: MOVING, SUPPLEMENTING, COVERING, OR REMOVAL OF DEVICES AS DIRECTED BY THE ENGINEER.

THE FOLLOWING GENERAL NOTES APPLY AT ALL TIMES FOR THE DURATION OF THE CONSTRUCTION PROJECT EXCEPT WHEN OTHERWISE NOTED IN THE PLAN OR DIRECTED BY THE ENGINEER.

LANE AND SHOULDER CLOSURE REQUIREMENTS

A) REMOVE LANE CLOSURE DEVICES FROM THE LANE WHEN WORK IS NOT BEING PERFORMED BEHIND THE LANE CLOSURE OR WHEN A LANE CLOSURE IS NO LONGER NEEDED OR AS DIRECTED BY THE ENGINEER.

B) WHEN PERSONNEL AND/OR EQUIPMENT ARE WORKING WITHIN 15 FT OF AN OPEN TRAVEL LANE, CLOSE THE NEAREST OPEN SHOULDER USING ROADWAY STANDARD DRAWING NO. 1101.04 UNLESS THE WORK AREA IS PROTECTED BY BARRIER OR GUARDRAIL OR A LANE CLOSURE IS INSTALLED.

TRAFFIC PATTERN ALTERATIONS

C) NOTIFY THE ENGINEER TWENTY ONE (21) CALENDAR DAYS PRIOR TO ANY TRAFFIC PATTERN ALTERATION.

SIGNING

D) INSTALL ADVANCE WORK ZONE WARNING SIGNS WHEN WORK IS WITHIN 40 FT FROM THE EDGE OF TRAVEL LANE AND NO MORE THAN THREE (3) DAYS PRIOR TO THE BEGINNING OF CONSTRUCTION.

E) PROVIDE SIGNING AND DEVICES REQUIRED TO CLOSE THE ROAD ACCORDING TO THE ROADWAY STANDARD DRAWINGS AND TRAFFIC CONTROL PLANS.

PROVIDE SIGNING REQUIRED FOR THE OFF-SITE DETOUR ROUTE AS SHOWN ON THIS SHEET.

F) COVER OR REMOVE ALL SIGNS AND DEVICES REQUIRED TO CLOSE THE ROAD WHEN ROAD CLOSURE IS NOT IN OPERATION.

COVER OR REMOVE ALL SIGNS REQUIRED FOR THE OFF-SITE DETOUR WHEN THE DETOUR IS NOT IN OPERATION.

G) ENSURE ALL NECESSARY SIGNING IS IN PLACE PRIOR TO ALTERING ANY TRAFFIC PATTERN.

H) INSTALL AND ACTIVATE CMS SIGNS 2 WEEKS PRIOR TO ROAD CLOSURE.

TRAFFIC CONTROL DEVICES

I) PLACE TYPE III BARRICADES, WITH "ROAD CLOSED" SIGN R11-2 ATTACHED, OF SUFFICIENT LENGTH TO CLOSE ENTIRE ROADWAY.

PAVEMENT MARKINGS AND MARKERS

J) INSTALL PAVEMENT MARKINGS ON THE FINAL SURFACE AS FOLLOWS:

| ROAD NAME | MARKING |
|---|---|
| SR 2099 (BLACKBERRY ROAD) | PAINT |

K) TIE PROPOSED PAVEMENT MARKING LINES TO EXISTING PAVEMENT MARKING LINES.

L) REMOVE/REPLACE ANY CONFLICTING/DAMAGED PAVEMENT MARKINGS.

M) PASSING ZONE WILL BE DETERMINED IN THE FIELD AND MUST BE APPROVED BY THE ENGINEER.

# PHASING

PHASE I

PRIOR TO ANY CONSTRUCTION OPERATIONS, PLACE AND COVER OFF-SITE DETOUR SIGNING AS SHOWN ON TCP-2 AND IN ACCORDANCE WITH RSD 1101.03 (SHEET 1 OF 9). PLACE CMS AND ACTIVATE.

PHASE II

USING OFF-SITE DETOUR, UNCOVER DETOUR SIGNS, CLOSE -L- (SR 2099 / BLACKBERRY ROAD) TO TRAFFIC AND CONSTRUCT BRIDGE, APPROACHES AND ROADWAY UP TO AND INCLUDING FINAL LAYER OF SURFACE COURSE.

PHASE III

UPON COMPLETION OF BRIDGE, APPROACHES AND ROADWAY, PLACE FINAL PAVEMENT MARKING IN ACCORDANCE WITH RSD 1205.01. REMOVE CMS, BARRICADES AND DETOUR SIGNS AND OPEN -L- (SR 2099 / BLACKBERRY ROAD) TO TRAFFIC.

3:37:41 PM
3:\Projects\TCP_Sheet2.dgn
8/16/2013

APPROVED: _____ DATE: 8/20/13

SEAL

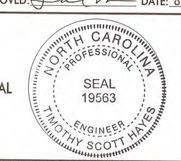


# GENERAL NOTES, PHASING AND DETOUR SIGNING

| | |
|---|---|
| SCALE: | NONE |
| DATE: | 03/15/12 |
| DWG. BY: | RGK |
| DESIGN BY: | EDM |
| REVIEWED BY: | TSH |

| REVISIONS | |
|---|---|
| | |
| | |
| | |
| CADD FILE | |

| PROJECT REFERENCE NO. | SHEET NO. |
|---|---|
| BD-51091 | EC-1 |

PLANS PREPARED BY:
**PARSONS BRINCKERHOFF**
434 FAYETTEVILLE STREET
SUITE 1500
RALEIGH, NC 27601
LICENSE NO. F-0165

# EROSION CONTROL PLAN

ROADSIDE ENVIRONMENTAL UNIT
DEPARTMENT OF TRANSPORTATION
DIVISION OF HIGHWAYS
RALEIGH, N.C.

2012 STANDARD SPECIFICATIONS

***THESE EROSION AND SEDIMENT CONTROL PLANS COMPLY WITH THE REGULATIONS SET FORTH BY THE NCG-010000 GENERAL CONSTRUCTION PERMIT EFFECTIVE AUGUST 3, 2011 ISSUED BY THE NORTH CAROLINA DEPARTMENT OF ENVIRONMENT AND NATURAL RESOURCES DIVISION OF WATER QUALITY.***

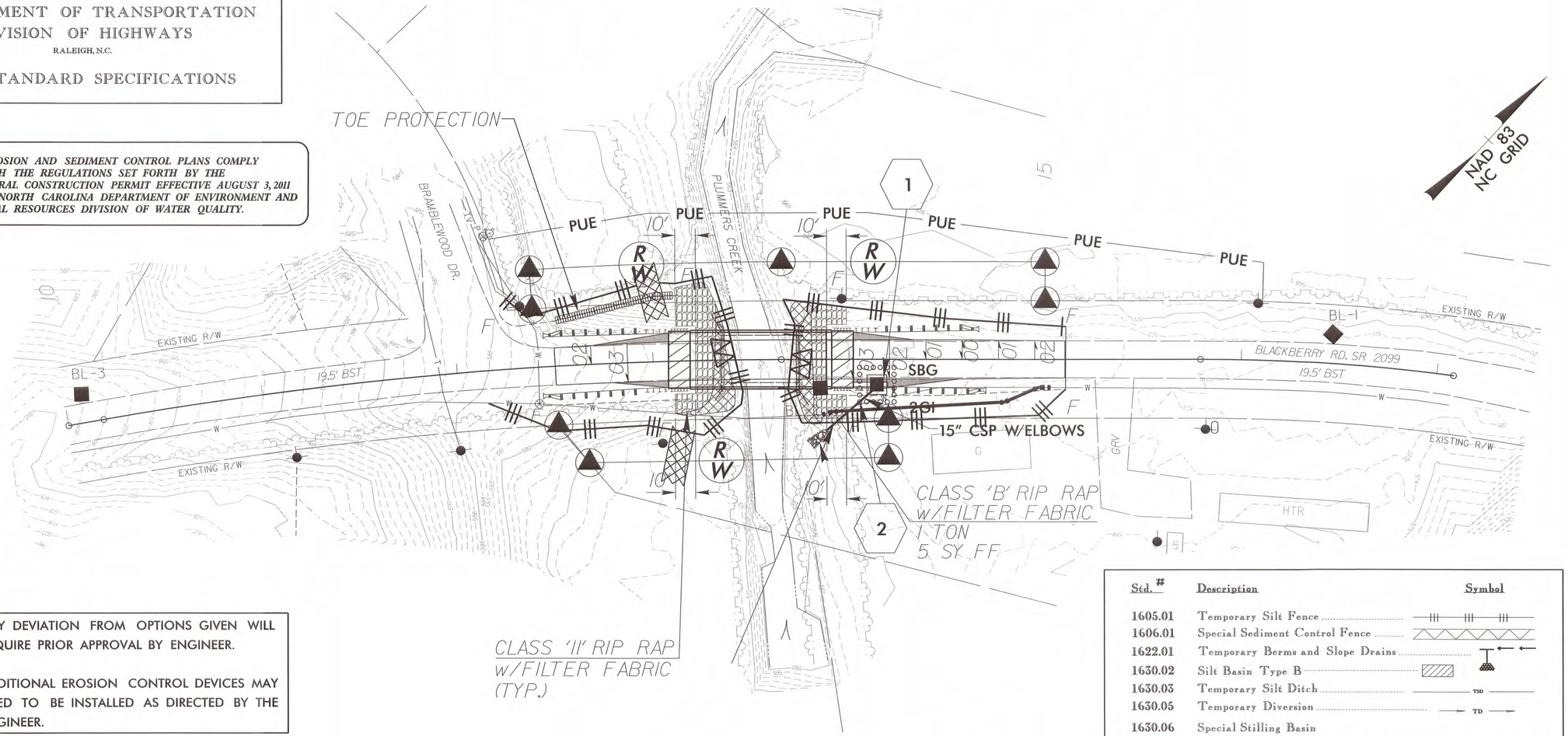


NOTES: ANY DEVIATION FROM OPTIONS GIVEN WILL REQUIRE PRIOR APPROVAL BY ENGINEER.

ADDITIONAL EROSION CONTROL DEVICES MAY NEED TO BE INSTALLED AS DIRECTED BY THE ENGINEER.

## 2012 STANDARD DRAWINGS

| | | | |
|---|---|---|---|
| 1604.01 | Railroad Erosion Control Detail | 1632.01 | Rock Inlet Sediment Trap Type A |
| 1605.01 | Temporary Silt Fence | 1632.02 | Rock Inlet Sediment Trap Type B |
| 1606.01 | Special Sediment Control Fence | 1632.03 | Rock Inlet Sediment Trap Type C |
| 1607.01 | Gravel Construction Entrance | 1633.01 | Temporary Rock Silt Check Type A |
| 1622.01 | Temporary Berms and Slope Drains | 1633.02 | Temporary Rock Silt Check Type B |
| 1630.01 | Riser Basin | 1634.01 | Temporary Rock Sediment Dam Type A |
| 1630.02 | Silt Basin Type B | 1634.02 | Temporary Rock Sediment Dam Type B |
| 1630.03 | Temporary Silt Ditch | 1635.01 | Rock Pipe Inlet Sediment Trap Type A |
| 1630.04 | Stilling Basin | 1635.02 | Rock Pipe Inlet Sediment Trap Type B |
| 1630.05 | Temporary Diversion | 1640.01 | Coir Fiber Baffle |
| 1630.06 | Special Stilling Basin | 1645.01 | Temporary Stream Crossing |
| 1631.01 | Matting Installation | | |

Scale 1" = 30'
30' 0 30' 60'

CHARLES HEAFNER
LEVEL IIIA NAME

640
LEVEL IIIA CERTIFICATION NO.

| Std. # | Description | Symbol |
|---|---|---|
| 1605.01 | Temporary Silt Fence | |
| 1606.01 | Special Sediment Control Fence | |
| 1622.01 | Temporary Berms and Slope Drains | |
| 1630.02 | Silt Basin Type B | |
| 1630.03 | Temporary Silt Ditch | TSD |
| 1630.05 | Temporary Diversion | TD |
| 1630.06 | Special Stilling Basin | |
| 1632.03 | Rock Inlet Sediment Trap Type C | |
| 1633.01 | Temporary Rock Silt Check Type-A | |
| | Temporary Rock Silt Check Type-A with Matting and Polyacrylamide (PAM) | |
| 1633.02 | Temporary Rock Silt Check Type-B | |
| | Wattle | |
| | Wattle with Polyacrylamide (PAM) | |
| 1634.02 | Temporary Rock Sediment Dam Type-B | |
| 1635.01 | Rock Pipe Inlet Sediment Trap Type-A | |

| PROJECT REFERENCE NO. | SHEET NO. |
|---|---|
| BD-5109I | EC-2 |

PLANS PREPARED BY:
**PARSONS BRINCKERHOFF**
434 FAYETTEVILLE STREET
SUITE 1500
RALEIGH, NC 27601
LICENSE NO. F-0165

PRELIMINARY PLANS
DO NOT USE FOR CONSTRUCTION

DIVISION OF HIGHWAYS
STATE OF NORTH CAROLINA

# *SOIL STABILIZATION TIMEFRAMES*

| SITE DESCRIPTION | STABILIZATION TIME | TIMEFRAME EXCEPTIONS |
|---|---|---|
| PERIMETER DIKES, SWALES, DITCHES AND SLOPES | 7 DAYS | NONE |
| HIGH QUALITY WATER (HQW) ZONES | 7 DAYS | NONE |
| SLOPES STEEPER THAN 3:I | 7 DAYS | IF SLOPES ARE I0' OR LESS IN LENGTH AND ARE NOT STEEPER THAN 2:I, I4 DAYS ARE ALLOWED. |
| SLOPES 3:I OR FLATTER | I4 DAYS | 7 DAYS FOR SLOPES GREATER THAN 50' IN LENGTH. |
| ALL OTHER AREAS WITH SLOPES FLATTER THAN 4:I | I4 DAYS | NONE, EXCEPT FOR PERIMETERS AND HQW ZONES. |

# WATER RELOCATION PLAN AND PROFILE

| PROJECT REFERENCE NO. | SHEET NO. |
|---|---|
| BD-5109I | UC-1 |
| R/W SHEET NO. | |
| C.O.A. | ENGINEER'S STAMP |

NORTH CAROLINA PROFESSIONAL SEAL 036443 ENGINEER RANDALL L ROBERTS 08/28/13

PLANS PREPARED BY:
**PARSONS BRINCKERHOFF**
434 FAYETTEVILLE STREET
SUITE 1500
RALEIGH, NC 27601
LICENSE NO. F-0165

8/17/99

CAROL C. DOBY
DB 1994 PG 1773
DB 1994 PG 1767

BRAMBLEWOOD DR.

LUMMERS CREEK

TV P

EXISTING R/W

60.00'

19.5' BST

EXISTING R/W

WOOD WW

WOOD WW

WOOD WW

39.6'

PROPOSED STORM DRAIN
(SEE DRAINAGE PLANS)

BLACKBERRY RD.
SR 2099

EXISTING 3" WATERLINE
ALREADY ABANDONED BY UTILITY

UNDER GROUND WATERLINE SHOWN BASED
ON FIELD MEASUREMENTS

BLACKBERRY RD. SR 2099

19.5' BST

60.00'

EXISTING R/W

INV=56

8" WL

REMOVE EXISTING
8" WATER LINE

NEW 8" P.C. 350 DI
WATER LINE

STA. 0+00.00
8" 11.25° BEND
CONNECT TO EXISTING
8" WATERLINE WITH
8" SLEEVE

STA. 0+87.42
8" 22.5° BEND

STA. 1+06.15
8" 22.5° BEND
CONNECT TO EXIST.
WATER LINE WITH
8" SLEEVE

HTR

FRANKIE A. BULLINS
DB 927 PG 26

2

-L- POC Sta.12+20.00
BEGIN TIP PROJECT BD-5109I
BEGIN CONSTRUCTION

-L- POT Sta.15+10.00
END TIP PROJECT BD-5109I
END CONSTRUCTION

NAD 83/NSRS 2007
NC GRID

50' 25' 0 25' 50'
Scale 1" = 25'

+0.00
RESTRAIN
11 LF EXISTING
(SEE NOTE)

RESTRAIN

+06.15
RESTRAIN
11 LF EXISTING

EXISTING GROUND

PROPOSED
15" CSP
w/ELBOWS

36" MIN.

18"

8" P.C. 350 DIP WATER

8" 11.25° BEND
STA. 0+00.00
CONNECT TO EXIST.
WATER LINE
VERIFY DEPTH AND MATERIAL

8" 22.5° BEND
STA. 0+87.42

8" 22.5° BEND
STA. 1+06.15
CONNECT TO EXIST.
WATER LINE
VERIFY DEPTH AND MATERIAL

575
570
565
560
555
550
545
540

NOTE: CONTRACTOR MAY INSTALL CONCRETE THRUST COLLAR IN LIEU OF JOINT RESTRAINT WHERE SPECIFIED IN ORDER TO AVOID IMPACTS TO CREEK.

5FT
0FT
0FT 25FT

0+00 0+50 1+00

8/28/2013 AM
I:\045708_AM_BD_5109I_TIP_PROJECT_WTL_psh_WI.dgn

| PROJECT REFERENCE NO. | SHEET NO. |
|---|---|
| BD-5109I | UC-2 |
| R/W SHEET NO. | |
| C.O.A. | ENGINEER'S STAMP |

## WATER GENERAL NOTES

1. ALL PROPOSED PIPE SHALL BE 8" P.C. 350 DUCTILE IRON MANUFACTURER RESTRAINT JOINT PIPE WITH MINIMUM 4 DEGREES ALLOWABLE DEFLECTION.

2. THE CONTRACTOR SHALL COORDINATE ISOLATION OF THE EXISTING WATER MAIN FOR TIE-INS WITH DAVIDSON WATER, INC. 2 WEEKS PRIOR AND AGAIN 24 HOURS PRIOR TO ANY REQUIRED SHUTDOWN OR TAPPING OPERATION. CONTRACTOR SHALL NOTIFY THE DAVIDSON WATER, INC. TO SCHEDULE INSPECTION AT LEAST 48 HOURS IN ADVANCE OF COMPLETION.

3. SHUT-DOWN OF THE EXISTING WATER LINE TO ACCOMDATE CONNECTION OF THE NEW WATERLINE SHALL BE LIMITED TO 4 HOURS MAXIMUM.

4. PRIOR TO MAKING TIE-INS: FACILITATE FILLING, FLUSHING, TESTING, STERILIZATION, AND BLOWOFF OF PROPOSED WATER MAIN BY INSTALLING 8"X2" TAPPING SADDLE AND VALVE ON THE EXISTING 8" PVC MAIN. HARD PIPE FROM TAPPING VALVE TO STUBBED OUT END OF PROPOSED 8" WATER MAIN WITH 2" SOLVENT WELD SCHEDULE 40 PVC PIPE. PROVIDE RESTRAINED 8" CAP TAPPED FOR 2" CONNECTION. PROVIDE TEMPORARY 2" BLOWOFF ON OPPOSITE END OF PROPOSED MAIN WITH LIKE MATERIALS INCLUDING 2" ISOLATION VALVE.

5. THE WATER MAIN SHALL BE FLUSHED AT 2.5 FPS AND PRESSURE TESTED BEFORE CONNECTIONS ARE MADE. TEST SHALL CONSIST OF A 3-HOUR PRESSURE TEST AT 200 PSI WITH ALLOWABLE LEAKAGE PER DAVIDSON WATER, INC. STANDARDS, LATEST EDITION. CONTRACTOR SHALL PROVIDE ALL TEMPORARY PLUGS, FITTINGS, AND THRUST RESTRAINT TO PERFORM THE TEST. ALL MATERIALS, LABOR, EQUIPMENT, AND TOOLS NECESSARY FOR PRESSURE TESTING SHALL BE INCLUDED IN THE UNIT BID PRICE OF ASSOCIATED WATER MAIN.

6. THRUST RESTRAINT OF NEW BURIED WATER MAIN SHALL BE PROVIDED PER LENGTHS SPECIFIED ON PROFILE, RESTRAIN USING FRICTION DEVICES IN THE JOINT GASKET ARE NOT ACCEPTABLE. RESTRAINT SHALL BE PROVIDED USING THE PIPE MANUFACTURER'S MECHANICAL RESTRAINED JOINT SYSTEM, THE EBBA IRON, INC. MEGALUG SYSTEM, OR APPROVED EQUAL.

7. THRUST RESTRAINT OF EXISTING DIP WATER MAIN JOINTS SHALL BE PROVIDED USING THE EBBA IRON INC. SERIES 1100 HD HARNESS SYSTEM, OR APPROVED EQUAL.

8. AS-BUILT INFORMATION: THE CONTRACTOR SHALL PROVIDE 2 SETS OF MARKED UP DRAWINGS SHOWING ALL MODIFICATIONS TO THE CONTRACT DRAWINGS. THESE MARKED UP SETS SHALL INCLUDE STATION/OFFSET/ELEVATION ACCURATELY LOCATING ALL UNDERGROUND PIPING, STRUCTURES, FITTINGS, AND CASING ENDS. INFORMATION SHALL BE GATHERED USING SURVEY INSTRUMENTS. MARK-UP OF CONTRACT DRAWING IS ACCEPTABLE.

9. BACKFILLING AND COMPACTION OF WATER MAIN TRENCHES SHALL BE IN ACCORDANCE WITH DAVIDSON WATER, INC SPECIFICATIONS.

10. CONTRACTOR SHALL PROVIDE GAUGED PIPE FOR ALL FIELD CUTTING OPERATIONS. CUT ENDS SHALL BE REPAIRED IN ACCORDANCE WITH THE MANUFACTURER'S RECOMMENDATIONS PRIOR TO MAKING A JOINT SEAL.

11. COMPACT SLEEVES ARE NOT ACCEPTABLE. ALL SLEEVES SHALL BE MECHANICAL JOINT, LONG BODY STYLE PER AWWA C153.

12. ALL WATER MAIN PROFILES ARE SHOWN ALONG THE LENGTH OF THE WATER LINE.

13. CONTRACTOR TO VERIFY EXISTING PIPE MATERIALS PRIOR TO ORDERING MATERIALS.

14. CONTRACTOR TO PROVIDE ALL EROSION CONTROL MEASURES NECESSARY TO PREVENT THE LOSS OF SEDIMENT INTO THE CREEK OR STORM DRAINAGE SYSTEM. ALL DISTURBED AREAS TO BE GRASSED AND STABILIZED ONCE THE NEW WATERLINE HAS BEEN TESTED AND ACCEPTED BY THE UTILITY. SEE EROSION CONTROL PLANS.

15. CONTRACTOR TO PROVIDE TRAFFIC CONTROL MEASURES AS NECESSARY TO FACILITATE CONSTRUCTION OF THE WATER MAIN PER NCDOT STANDARDS.

## GENERAL MATERIAL SPECIFICATIONS

1. PIPE; SDR 17 LENGTHS 20' MAX. 2", 3". PIPE MUST HAVE NSF/PW SEAL STAMPED ON IT.

2. PIPE; SDR 21 LENGTHS 20' MAX. 2", 3", 4". PIPE MUST HAVE NSF/PW SEAL STAMPED ON IT.
3. PIPE; DUCTILE IRON P.C. 350 6", 8", 10", 12", 16".

4. VALVES; AWWA STANDARD SPECIFICATIONS. VALVES SHALL OPEN LEFT, NON-RISING STEM. 200 PSI WORKING PRESSURE IRON BODY, RESILIENT SEAT GATE VALVE 2", 3", 4", 6", 8", MUELLER, M & H, AMERICAN DARLING, KENNEDY.

5. FIRE HYDRANTS; AWWA TYPE DRY TOP NATIONAL STANDARD, TRAFFIC TYPE. 4½" VALVE OPENING, 1½" PENT., TWO 2½" OPENINGS, ONE 4½" OPENING, BRONZE TO BRONZE SEAT, YELLOW BARREL, RED BONNET CAPS, NOT LESS THAN 3' 6" BURY, OPEN LEFT. MUELLER, SUPER CENTURION 200, M & H #129, AMERICAN DARLING, MARK 73-1, KENNEDY, K81A.

6. FITTINGS; DUCTILE IRON PUSH ON, M.J.
ALL FIRE HYDRANTS SHALL BRANCH OFF WITH HYDRANT TEE AND AND MOST STUB OUTS.

7. ALL MIPX BELL ADAPTERS 2" AND 3" SHALL BE HARCO.

8. ALL THREADED PIPE (NIPPLES ETC.) SHALL BE BRASS 2" AND 3".

9. VALVE BOXES 5¼" CAST IRON WITH WATER WRITTEN ON THE LID, SCREW TYPE.

10. METER BOX PLASTIC 12" DEEP BROOKS #1419-12, JONES, METER BOX LID, SOLID CAST IRON 15 LB. MIN.
11. LINESETTER; FORD LSVBHH41-233W, MUELLER B-2418F-2A WITH H-14222 AND H-14227 END PIECES.
12. TUBING; TYPE K COPPER ASTM B-88.

13. CORPORATION STOPS; FORD F-1000, MUELLER H-15008.

14. SERVICE SADDLES; MULLER H-134, FORD S70, CC THREADS.

15. TAPPING SLEEVES STAINLESS STEEL, FULL RUBBER BACK, JCM, ROMAC-SST, FORD, SMITH-BLAIR.

## ENGINEER'S NOTES

1. MINIMUM 3 FEET COVER ON WATER LINES, A MAXIMUM OF 4 FEET. (SEE TRENCH SECTION AND LINESETTER INSTALLATION TYPICAL)

2. WATER LINE SHALL BE PLACED AT LEAST 3 FEET FROM EDGE OF PAVEMENT BUT NO GREATER THAN 5 FEET FROM EDGE OF PAVEMENT. (SEE TRENCH SECTION AND LINESETTER INSTALLATION TYPICAL)
3. SPECIAL CARE SHOULD BE TAKE AT CUL-DE-SACS TO KEEP THE WATER LINE THE PROPER DISTANCE FROM THE PAVEMENT. (SEE CUL-DE-SAC TYPICAL)

4. WATER LINES 6" AND OVER SHALL BE DUCTILE IRON.

5. THE DEVELOPER IS RESPONSIBLE FOR THE INSTALLATION OF TAPS OR ENCASEMENTS ON THE LONG SIDE WHEN THE SUBSURFACE OF THE ROADWAY CANNOT BE BORED. (SEE SERVICE ENCASEMENT TYPICALS)
6. THE MAXIMUM DISTANCE FOR A 2" LINE IS 500'. THE MAXIMUM NUMBER OF TAPS ON A 2" LINE IS 6. (SEE CUL-DE-SAC TYPICAL)

7. MINIMUM FIRE FLOW SHALL BE 500 GALLONS PER MINUTE AT 30 P.S.I.

8. WATER MAINS RUNNING UNDER THE PAVEMENT ARE TO BE DUCTILE IRON.

9. FIRE HYDRANTS SHALL BE SPACED NO MORE THAN 900 FEET APART (SOME TYPES OF DEVELOPMENTS MAY REQUIRE CLOSER SPACING).

10. AT ALL CREEK CROSSINGS WHERE THE WATER LINE IS RUN THROUGH OR UNDER THE CREEK, THERE SHALL BE 3 FOOT COVER AND STEEL ENCASEMENT PIPE, D.I. USED AS A CARRIER.

11. ALL LINES, SMALLER THAN 6", WITH A PRESSURE OF 100 PSI (STATIC OR DYNAMIC) OR GREATER, SHALL BE CONSTRUCTED OF DUCILE IRON. (TYPE OF MATERIAL SHALL BE DETERMINED BY DAVIDSON WATER, INC.)

12. PROVIDE DAVIDSON WATER, INC. WITH A DIGITAL COPY OF THE STREET/WATER LINE LAYOUT.

13. BEFORE ENGINEER WRITES LETTER FOR VERIFICATION OF CONSTRUCTION, DAVIDSON WATER, INC. WATERLINE REPRESENATIVE, ENGINEER OR AGENT AND CONTRACTOR, SHALL PERFORM A FINAL INSPECTION.

## INSTALLATION SPECIFICATIONS

1. WORK TO BE PERFORMED SHALL CONSIST OF FURNISHING AND INSTALLING COMPLETE AND READY FOR SERVICE ALL WATER MAIN AND APPURTENANCES IN ACCORDANCE WITH THE CONTRACT PLANS AND SPECIFICATIONS. PRIOR TO COMMENCING WORK, THE CONTRACTOR WILL PROVIDE 2 WORKING DAYS NOTICE TO DAVIDSON WATER INC., NCDOT, AND ALL OTHER APPROPRIATE UTILITY COMPANIES.

2. TRENCH EXCAVATION IN ROCK SHALL BE A MINIMUM OF 2 FEET WIDER THAN THE NOMINAL PIPE DIAMETER. EXCAVATION SHALL BE 6" BELOW THE PROPOSED INVERT OF THE PVC PIPE AND BACKFILLED(CUSHIONED) WITH CLEAN SOIL OR SAND.

3. BACKFILL ALONG SIDES AND IMMEDIATELY OVER PIPE BY HAND. BACKFILL MATERIAL AROUND PIPE SHALL BE FREE OF ROCKS AND OTHER DEBRIS. TRENCH BACKFILL UNDER EXISTING OR PROPOSED PAVING AND ROAD SHOULDERS SHALL BE COMPACTED TO A DENSITY OF 95 PERCENT OF MAXIMUM DRY DENSITY.

4. ENCASEMENT PIPE SHALL BE INSTALLED BY DRY BORING AND JACKING. CASING DIAMETER, LENGTH, AND WALL THICKNESS SHALL BE AS SHOWN ON PLANS. MATERIALS AND WORKMANSHIP IN THE EXISTING OR PROPOSED NCDOT RIGHT OF WAY SHALL CONFORM TO NCDOT STANDARDS AND SPECIFICATIONS. THE CONTRACTOR MAKING THE BORED CROSSING SHALL NOTIFY NCDOT PRIOR TO THE START OF WORK WITH ENOUGH NOTICE FOR NCDOT TO PROVIDE INSPECTORS.

5. WATER MAINS SHALL BE LAID AT LEAST 10 FEET LATERALLY FROM EXISTING OR PROPOSED SANITARY SEWERS. WATER MAINS SHALL HAVE A MINIMUM OF 18" VERTICAL SEPARATION OVER SEWER MAINS. WHERE THIS SEPARATION IS NOT POSSIBLE OR THE WATER MAIN IS LAID UNDER THE SEWER MAIN, BOTH THE WATER AND SEWER PIPE SHALL BE DUCTILE IRON PIPE. CENTER PIPE SPANS AT POINT OF INTERSECTION IN ORDER TO HAVE 10 FEET FROM WATER LINE JOINT TO POINT OF INTERSECTION.

6. MINIMUM COVER FOR WATER MAINS SHALL BE 36 INCHES. MAXIMUM COVER SHALL BE 48 INCHES. MINIMUM TRENCH WIDTH SHALL BE PIPE DIAMETER PLUS 18 INCHES. (SEE TRENCH SECTION AND LINESETTER TYPICAL)

7. ALL PIPE SHALL BE THOROUGHLY CLEANED OF ALL EARTH MATERIAL AND RUBBISH BEFORE BEING PLACED IN THE TRENCH. BELL HOLES WILL BE DUG AT EACH JOINT. PIPE SHALL BE PLACED ON FIRM, SMOOTH FOUNDATION TO PREVENT SUBSEQUENT SETTLEMENT.
8. CONCRETE THRUST BLOCKING OR MECHANICAL RESTRAINT SHALL BE CONSTRUCTED AT ALL BENDS, TEES, REDUCERS, AND DEAD ENDS AND WHERE CONDITIONS WARRANT AND DESIGNATED ON PROFILES. ALL FITTINGS AND ACCESSORIES TO BE WRAPPED WITH POLYETHYLENE FILM PRIOR TO PLACING BLOCKING.

9. HYDRANTS SHALL BE SET PLUMB AS INDICATED ON THE DRAWINGS WITH THE PUMPER CONNECTION 18 INCHES ABOVE GRADE. THE BACK OF THE HYDRANT, OPPOSITE THE PIPE CONNECTION, SHALL BE FIRMLY BLOCKED AGAINST THE VERTICAL FACE OF THE TRENCH WITH POURED-IN-PLACE CONCRETE TO PREVENT THE HYDRANT FROM BLOWING OFF THE LINE. IN FILL AREAS OR SOILS THAT ARE NOT SOLID HYDRANTS SHALL BE RODDED OR RESTRAINED BY MEGA-LUG USING DUCTILE IRON PIPE NOT PVC. CLEAN CRUSHED STONE OR GRAVEL SHALL BE PLACED AROUND THE BASE OF EACH HYDRANT ABOVE THE SUPPORTING FOUNDATION AND TO WITHIN 12 INCHES OF THE GROUND LINE. STONE OR GRAVEL SHALL EXTEND AT LEAST 10 INCHES AWAY FROM THE HYDRANT BARREL IN ALL DIRECTIONS. HYDRANTS SHALL BE OPENED AND FLUSHED PRIOR TO PRESSURE TESTING OF THE LINES. SEE HYDRANT INSTALLATION TYPICAL)

10. VALVE BOX ASSEMBLY SHALL BE SET PLUMB, TRUE AND TO GRADE. (SEE VALVE INSTALLATION TYPICAL)
11. ALL WATER MAINS SHALL BE PRESSURE TESTED WITH A TEST PRESSURE AT THE HIGH POINT OF THE MAIN TWICE THE WORKING PRESSURE OR 200 PSI, WHICHEVER IS GREATER. TEST PRESSURE SHALL BE MAINTAINED FOR A MINIMUM OF 3 HOURS. MAKE UP WATER SHALL NOT EXCEED THE FOLLOWING AMOUNTS IN GALLONS PER 1000 FEET OF MAIN: 4" LINE - 1.11, 6" LINE - 1.65, AND 8" LINE 2.22.

12. ALL WATER MAINS SHALL BE FLUSHED AND DISINFECTED PRIOR TO BEING PUT IN SERVICE. FLUSHING SHALL BE ACCOMPLISHED WITH SUFFICIENT WATER VELOCITY (MINIMUM OF 2.5 FPS) TO THOROUGHLY CLEAN THE MAIN. THE MAINS SHALL BE DISINFECTED USING A CHLORINE EQUAL TO OR GREATER THAN 50 MILLIGRAMS PER LITER (50 PPM). THE CHLORINE SOLUTION SHALL REMAIN IN THE MAINS FOR A MINIMUM OF 24 HOURS. BACTERIOLOGICAL TEST SAMPLES SHALL BE TAKEN BY DAVIDSON WATER INC. FOR EVALUATION AND LINE DISINFECTANT APPROVAL. AFTER DISINFECTION IS COMPLETE, THE NEW LINES SHALL BE FLUSHED SUFFICIENTLY SO THAT THE CHLORINE CONCENTRATION LEVEL IN THE NEW LINES DO NOT EXCEED EXISTING LINE CONCENTRATION.

13. WATER LINES SHALL BE PLACED AT LEAST 3 FEET MINIMUM FROM THE EDGE OF THE PAVEMENT BUT NO GREATER THAN 5 FEET FROM THE EDGE OF THE PAVEMENT. (SEE TRENCH SECTION AND LINESETTER INSTALLATION TYPICAL)

14. SPECIAL CARE SHOULD BE TAKEN AT CUL-DE-SACS TO ENSURE WATER LINE IS KEPT PROPER DISTANCE FROM THE EDGE OF THE PAVEMENT. (SEE CUL-DE-SAC TYPICAL)

15. ALL TAPPING SLEEVES AND VALVES SHALL BE AIR TESTED AT 150 P.S.I. FOR A MINIMUM OF 15 MINUTES. TESTING IS TO TAKE PLACE BEFORE TAPS ARE MADE.

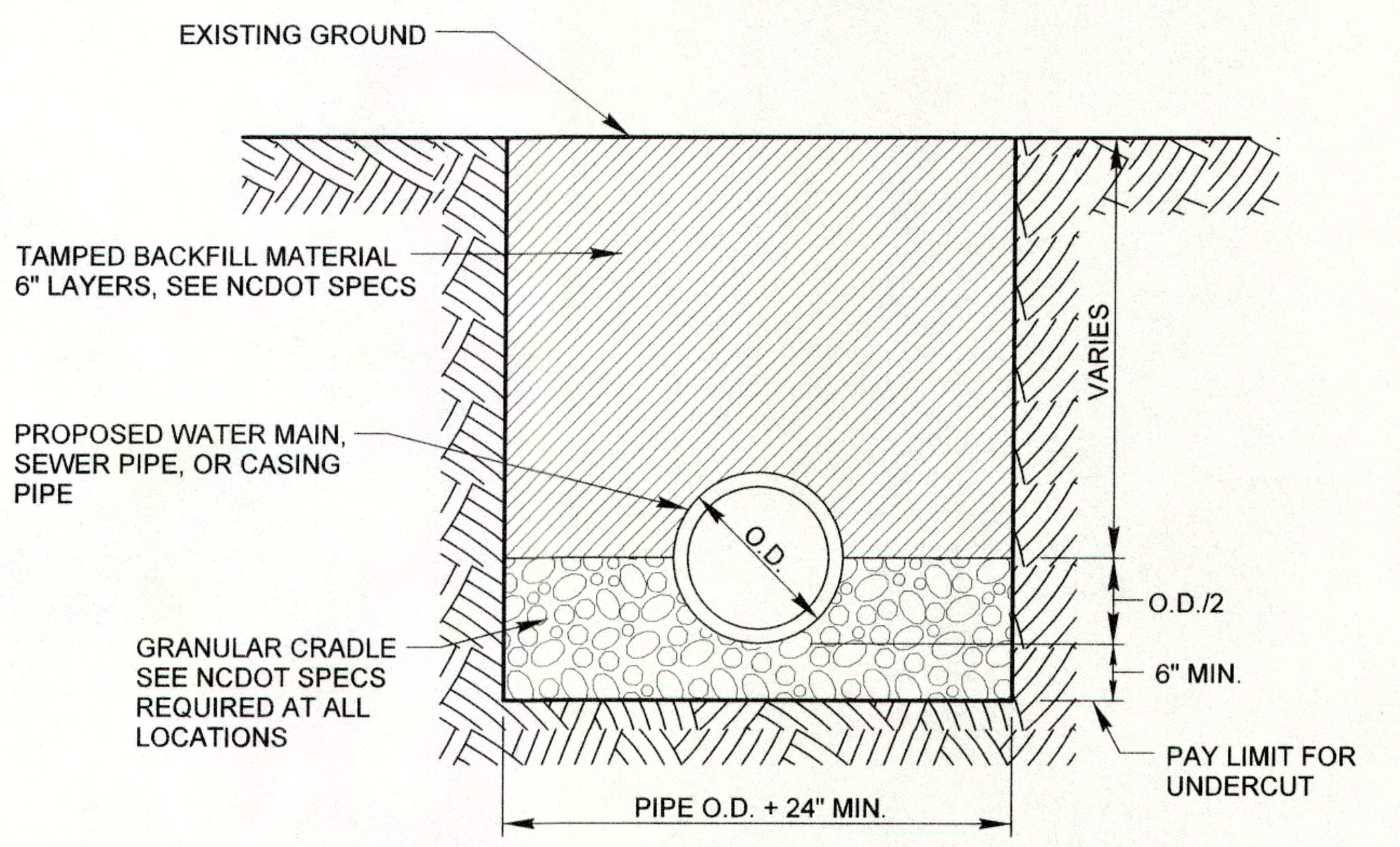


STANDARD DETAIL
N.T.S.

**PIPE BEDDING\BACKFILL DETAIL**

5/14/99
10:28:40 AM
BD-5109I_UTL_psh_W2.dgn
8/28/2013

| PROJ. REFERENCE NO. | SHEET NO. |
|---|---|
| BD-5109I | X-1 |

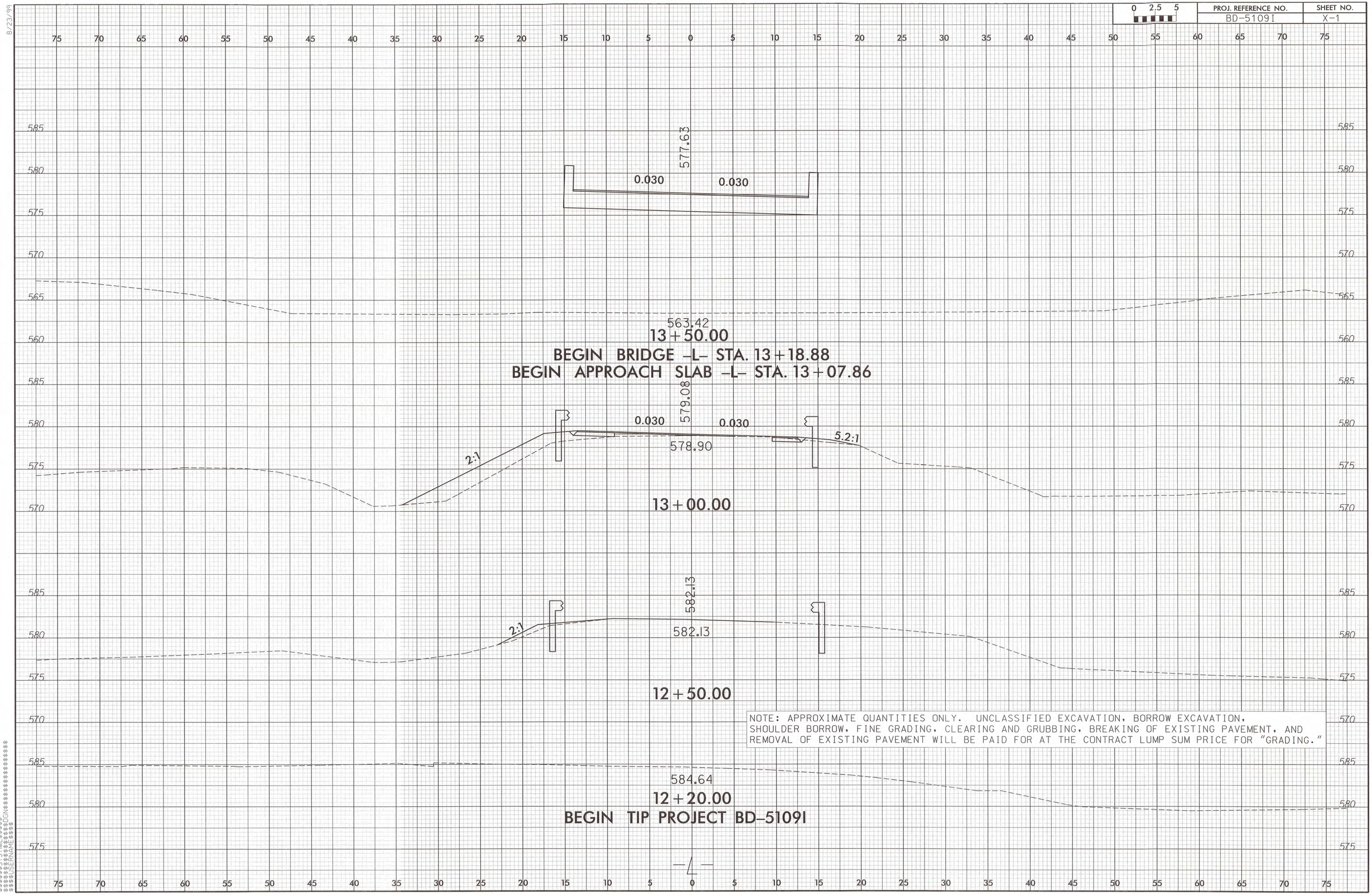


NOTE: APPROXIMATE QUANTITIES ONLY. UNCLASSIFIED EXCAVATION, BORROW EXCAVATION, SHOULDER BORROW, FINE GRADING, CLEARING AND GRUBBING, BREAKING OF EXISTING PAVEMENT, AND REMOVAL OF EXISTING PAVEMENT WILL BE PAID FOR AT THE CONTRACT LUMP SUM PRICE FOR "GRADING."

8/23/99

8/23/99

| 0 2.5 5 | PROJ. REFERENCE NO. | SHEET NO. |
|---|---|---|
| | BD-5109I | X-2 |

# END TIP PROJECT BD-5109I
## -L- STA. 15+10.00

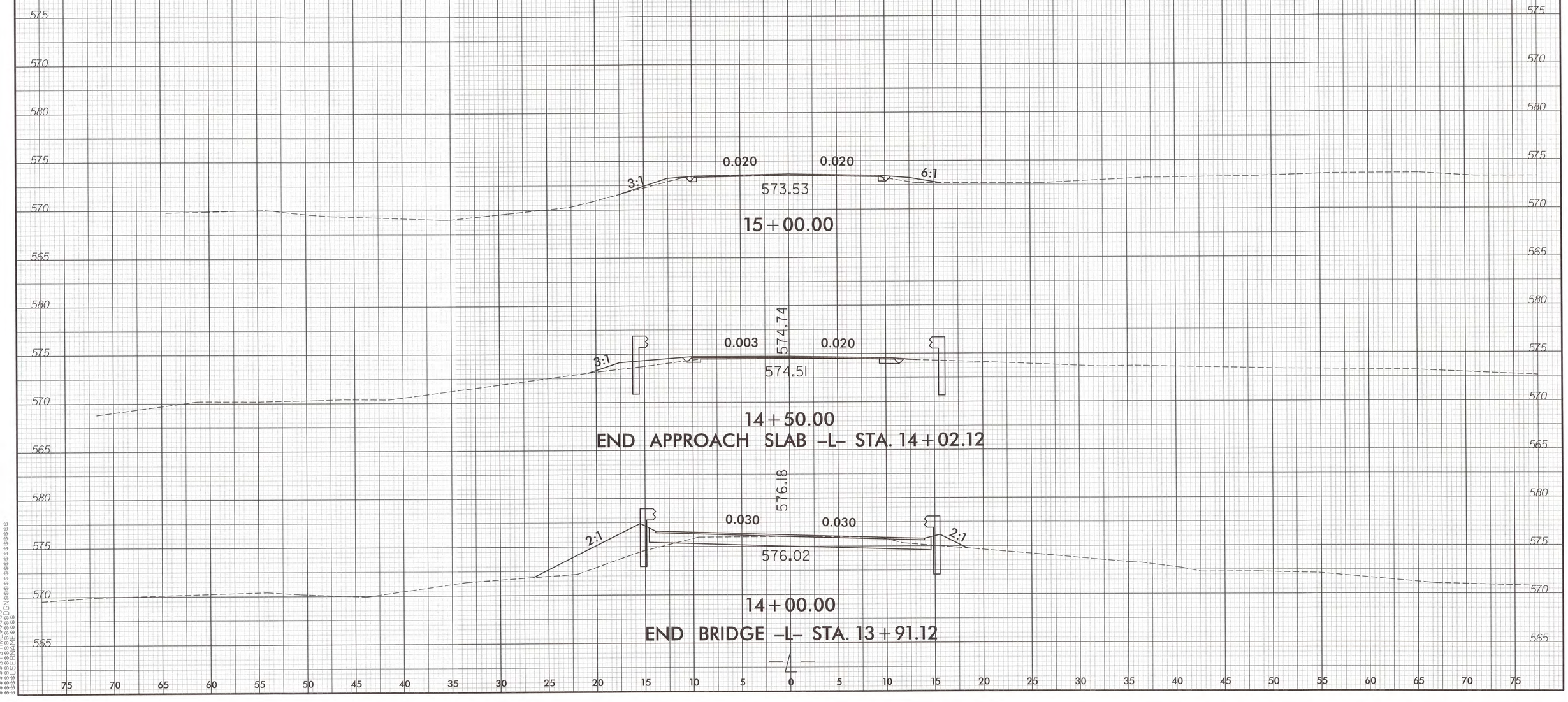


$$$$$$USERNAME$$$$$$

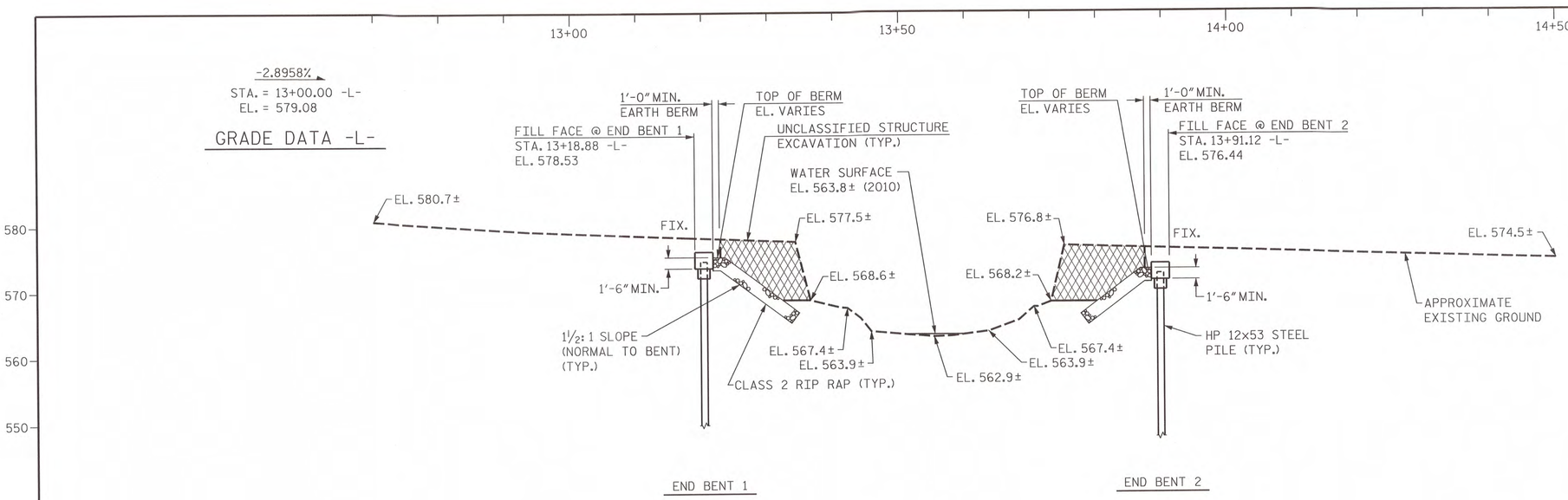


## SECTION ALONG -L-

## HYDRAULIC DATA

| | |
|---|---|
| DESIGN DISCHARGE | 2000 CFS |
| FREQUENCY OF DESIGN FLOOD | 25 YRS. |
| DESIGN HIGH WATER ELEVATION | 570.9 |
| DRAINAGE AREA | 8.6 SQ.MI. |
| BASE DISCHARGE (Q100) | 2800 CFS |
| BASE HIGH WATER ELEVATION | 573.5 |

## OVERTOPPING FLOOD DATA

| | |
|---|---|
| OVERTOPPING FLOOD DISCHARGE | 2550 CFS |
| FREQUENCY OF OVERTOPPING FLOOD | >50 YRS. |
| OVERTOPPING FLOOD ELEVATION | 572.1 |

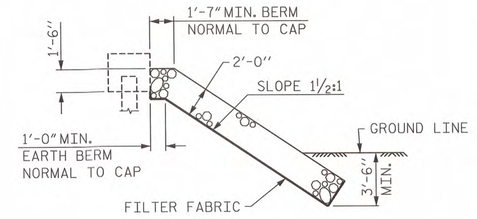


## RIP RAP DETAIL

## CURVE DATA

PI Sta 11+92.21
Δ = 9°57'03.7" (RT)
D = 2°51'53.2"
L = 347.36'
T = 174.12'
R = 2,000.00'

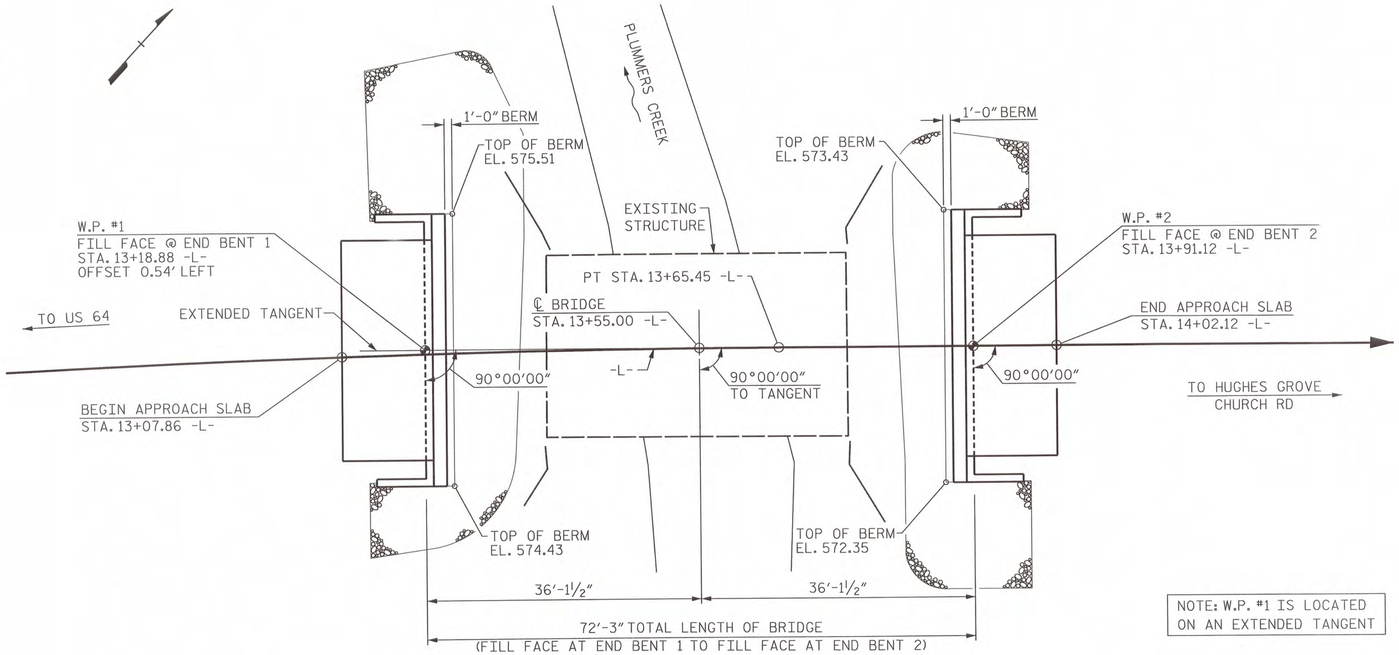


## PLAN

NOTE: W.P. #1 IS LOCATED ON AN EXTENDED TANGENT

I HEREBY CERTIFY THESE PLANS ARE THE AS-BUILT PLANS

PROJECT NO. BD-5109I

DAVIDSON COUNTY

STATION: 13+55.00 -L-

SHEET 1 OF 2 REPLACES BRIDGE NO. 280349

STATE OF NORTH CAROLINA
DEPARTMENT OF TRANSPORTATION
RALEIGH

GENERAL DRAWING
FOR BRIDGE ON SR 2099 OVER
PLUMMERS CREEK BETWEEN
US 64 AND SR 2097

| REVISIONS | | | | | | SHEET NO. |
|---|---|---|---|---|---|---|
| NO. | BY: | DATE: | NO. | BY: | DATE: | S-1 |
| 1 | | | 3 | | | TOTAL SHEETS |
| 2 | | | 4 | | | 12 |

PARSONS BRINCKERHOFF
434 FAYETTEVILLE STREET
SUITE 1500
RALEIGH, NC 27601
LICENSE NO. F-0165

NORTH CAROLINA PROFESSIONAL SEAL 032967 ENGINEER JOHN A. DOUGHTY
8/16/13

DRAWN BY : K. WHITE DATE : APR 2012
CHECKED BY : J. DOUGHTY DATE : APR 2012

CONTROL POINT BL-2, STA. 13+85.28, 14.51' RT., EL. 575.81

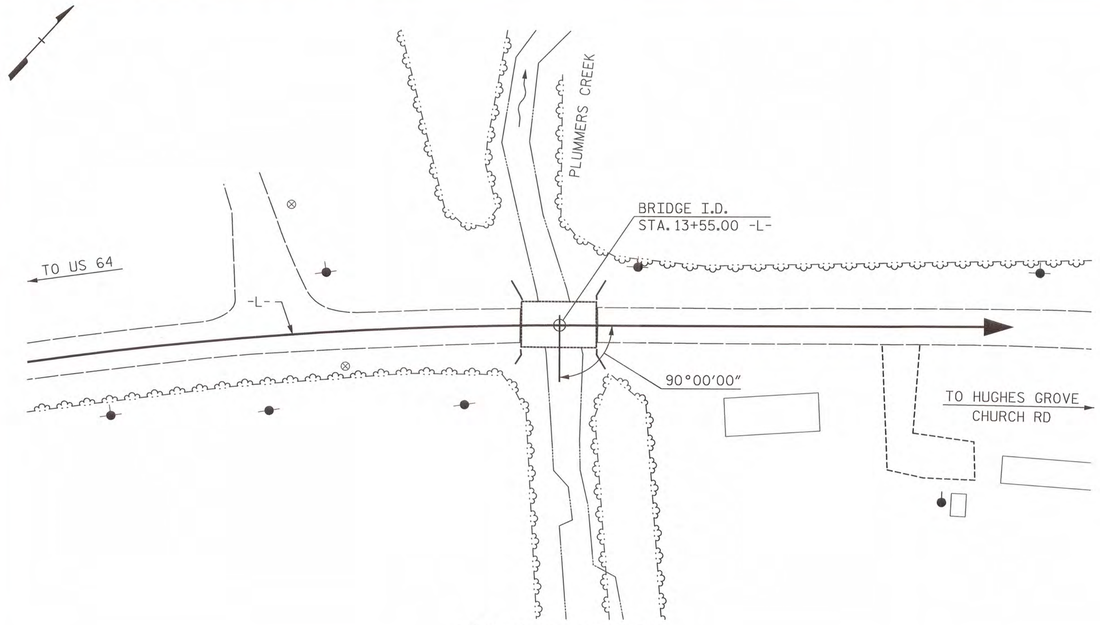


LOCATION SKETCH

NOTES:

ASSUMED LIVE LOAD = HL 93 OR ALTERNATE LOADING.

THIS BRIDGE HAS BEEN DESIGNED IN ACCORDANCE WITH THE AASHTO LRFD BRIDGE DESIGN SPECIFICATIONS.

FOR OTHER DESIGN DATA AND GENERAL NOTES, SEE SHEET SN.

FOR EROSION CONTROL MEASURES, SEE EROSION CONTROL PLANS.

THE EXISTING STRUCTURE CONSISTING OF ONE (1) 40'-6" SPAN, WITH A CLEAR ROADWAY WIDTH OF 24' AND A STEEL PLANK DECK COVERED WITH ASPHALT SUPPORTED BY STEEL GIRDERS, ON TIMBER CAPS AND TIMBER PILES ENCASED IN CONCRETE WITH TIMBER BULKHEADS SHALL BE REMOVED. THE EXISTING BRIDGE IS PRESENTLY POSTED BELOW THE LEGAL LOAD LIMIT. SHOULD THE STRUCTURAL INTEGRITY OF THE BRIDGE FURTHER DETERIORATE, THIS LOAD LIMITATION MAY BE REDUCED AS FOUND NECESSARY DURING THE LIFE OF THE PROJECT.

REMOVAL OF THE EXISTING BRIDGE SHALL BE PERFORMED SO AS NOT TO ALLOW DEBRIS TO FALL INTO THE WATER. THE CONTRACTOR SHALL REMOVE THE BRIDGE AND SUBMIT PLANS FOR DEMOLITION IN ACCORDANCE WITH ARTICLE 402-2 OF THE STANDARD SPECIFICATIONS.

THE MATERIAL SHOWN IN THE CROSS-HATCHED AREA SHALL BE EXCAVATED FOR A DISTANCE OF 30 FT. EACH SIDE OF CENTERLINE ROADWAY AS DIRECTED BY THE ENGINEER. THIS WORK WILL BE PAID FOR AT THE CONTRACT LUMP SUM PRICE FOR UNCLASSIFIED STRUCTURE EXCAVATION. SEE SECTION 412 OF THE STANDARD SPECIFICATIONS.

THE SUBSTRUCTURE OF THE EXISTING BRIDGE INDICATED ON THE PLANS IS FROM THE BEST INFORMATION AVAILABLE. SINCE THIS INFORMATION IS SHOWN FOR THE CONVENIENCE OF THE CONTRACTOR, THE CONTRACTOR SHALL HAVE NO CLAIM WHATSOEVER AGAINST THE DEPARTMENT OF TRANSPORTATION FOR ANY DELAYS OR ADDITIONAL COST INCURRED BASED ON DIFFERENCES BETWEEN THE EXISTING BRIDGE SUBSTRUCTURE SHOWN ON THE PLANS AND THE ACTUAL CONDITIONS AT THE PROJECT SITE.

ASPHALT WEARING SURFACE IS INCLUDED IN ROADWAY QUANTITY ON ROADWAY PLANS.

THIS STRUCTURE HAS BEEN DESIGNED IN ACCORDANCE WITH HEC 18, "EVALUATING SCOUR AT BRIDGES", MAY, 2001.

THE CONTRACTOR SHALL PROVIDE INDEPENDENT ASSURANCE SAMPLES OF REINFORCING STEEL AS FOLLOWS: FOR PROJECTS REQUIRING UP TO 400 TONS OF REINFORCING STEEL, ONE 30 INCH SAMPLE OF EACH SIZE BAR USED, AND FOR PROJECTS REQUIRING OVER 400 TONS OF REINFORCING STEEL, TWO 30 INCH SAMPLES OF EACH SIZE BAR USED. THE BARS FROM WHICH THE SAMPLES ARE TAKEN MUST THEN BE SPLICED WITH REPLACEMENT BARS OF THE SIZE AND LENGTH OF THE SAMPLE, PLUS A MINIMUM LAP SPLICE OF THIRTY BAR DIAMETERS. PAYMENT FOR THE SAMPLES OF REINFORCING STEEL SHALL BE CONSIDERED INCIDENTAL TO VARIOUS PAY ITEMS.

INASMUCH AS THE PAINT SYSTEM ON THE EXISTING STRUCTURAL STEEL CONTAINS LEAD, THE CONTRACTOR'S ATTENTION IS DIRECTED TO ARTICLE 107-1 OF THE STANDARD SPECIFICATIONS. ANY COSTS RESULTING FROM COMPLIANCE WITH APPLICABLE STATE OR FEDERAL REGULATIONS PERTAINING TO HANDLING OF MATERIALS CONTAINING LEAD BASED PAINT SHALL BE INCLUDED IN THE BID PRICE FOR "REMOVAL OF EXISTING STRUCTURE AT STATION 13+55.00."

NO KNOWN UTILITY CONFLICTS.

FOR SUBMITTAL OF WORKING DRAWINGS, SEE SPECIAL PROVISIONS.

FOR FALSEWORK AND FORMWORK, SEE SPECIAL PROVISIONS.

FOR CRANE SAFETY, SEE SPECIAL PROVISIONS.

FOR GROUT FOR STRUCTURES, SEE SPECIAL PROVISIONS.

FOR PILES, SEE SECTION 450 OF THE STANDARD SPECIFICATIONS.

PILES AT END BENT NO. 1 AND END BENT NO. 2 ARE DESIGNED FOR A FACTORED RESISTANCE OF 97 TONS PER PILE.

DRIVE PILES AT END BENT NO. 1 AND END BENT NO. 2 TO A REQUIRED DRIVING RESISTANCE OF 162 TONS PER PILE.

STEEL H-PILE POINTS ARE REQUIRED AT END BENT NO. 1 AND END BENT NO. 2. FOR STEEL PILE POINTS, SEE SECTION 450 OF THE STANDARD SPECIFICATIONS.

IT HAS BEEN ESTIMATED THAT A HAMMER WITH AN EQUIVALENT RATED ENERGY OF 30 TO 45 KIP-FT PER BLOW WILL BE REQUIRED TO DRIVE PILES AT END BENT NO. 1 AND END BENT NO. 2. THE ESTIMATED ENERGY RANGE DOES NOT RELEASE THE CONTRACTOR FROM PROVIDING EQUIPMENT IN ACCORDANCE WITH SUBARTICLE 450-3(D)(2) OF THE STANDARD SPECIFICATIONS.

## TOTAL BILL OF MATERIAL

| | REMOVAL OF EXISTING STRUCTURE AT STATION 13+55.00 -L- | UNCLASSIFIED STRUCTURE EXCAVATION AT STATION 13+55.00 -L- | CLASS A CONCRETE | BRIDGE APPROACH SLABS | REINFORCING STEEL | HP 12x53 STEEL PILES | | STEEL PILE POINTS | VERTICAL CONCRETE BARRIER RAIL | RIP RAP CLASS II (2'-0" THICK) | GEOTEXTILE FOR DRAINAGE | ELASTOMERIC BEARINGS | 3'-0" x 2'-0" PRESTRESSED CONCRETE CORED SLABS | |
|---|---|---|---|---|---|---|---|---|---|---|---|---|---|---|
| | LUMP SUM | LUMP SUM | CU. YDS. | LUMP SUM | LBS. | NO. | LIN. FT. | EA. | LIN. FT. | TONS | SQ. YDS. | LUMP SUM | NO. | LIN. FT. |
| SUPERSTRUCTURE | LUMP SUM | | | LUMP SUM | | | | | 140.3 | | | LUMP SUM | 10 | 700 |
| END BENT NO. 1 | | LUMP SUM | 13.3 | | 1977 | 5 | 100 | 5 | | 137 | 152 | | | |
| END BENT NO. 2 | | LUMP SUM | 13.3 | | 1977 | 5 | 75 | 5 | | 120 | 132 | | | |
| | | | | | | | | | | | | | | |
| | | | | | | | | | | | | | | |
| TOTAL | LUMP SUM | LUMP SUM | 26.6 | LUMP SUM | 3954 | 10 | 175 | 10 | 140.3 | 257 | 284 | LUMP SUM | 10 | 700 |

DRAWN BY : K. WHITE DATE : APR 2012
CHECKED BY : J. DOUGHTY DATE : APR 2012

PARSONS BRINCKERHOFF
434 FAYETTEVILLE STREET
SUITE 1500
RALEIGH, NC 27601
LICENSE NO. F-0165

NORTH CAROLINA PROFESSIONAL SEAL 032967 ENGINEER JASON A. DOUGHTY
8/14/13

PROJECT NO. BD-5109I
DAVIDSON COUNTY
STATION: 13+55.00 -L-

SHEET 2 OF 2

STATE OF NORTH CAROLINA
DEPARTMENT OF TRANSPORTATION
RALEIGH

GENERAL DRAWING
FOR BRIDGE ON SR 2099 OVER
PLUMMERS CREEK BETWEEN
US 64 AND SR 2097

| REVISIONS | | | | | | SHEET NO. |
|---|---|---|---|---|---|---|
| NO. | BY: | DATE: | NO. | BY: | DATE: | S-2 |
| 1 | | | 3 | | | TOTAL SHEETS |
| 2 | | | 4 | | | 12 |

# LOAD AND RESISTANCE FACTOR RATING (LRFD) SUMMARY FOR PRESTRESSED CONCRETE GIRDERS

| LEVEL | | VEHICLE | WEIGHT (W) (TONS) | CONTROLLING LOAD RATING | MINIMUM RATING FACTORS (RF) | TONS = W X RF | STRENGTH I LIMIT STATE | | | | | | | | | | SERVICE III LIMIT STATE | | | | | | COMMENT NUMBER |
|---|---|---|---|---|---|---|---|---|---|---|---|---|---|---|---|---|---|---|---|---|---|---|---|
| | | | | | | | | MOMENT | | | | | SHEAR | | | | | MOMENT | | | | | | |
| | | | | | | | LIVELOAD FACTORS | DISTRIBUTION FACTORS (DF) | RATING FACTOR | SPAN | GIRDER LOCATION | DISTANCE FROM LEFT END OF SPAN (ft) | DISTRIBUTION FACTORS (DF) | RATING FACTOR | SPAN | GIRDER LOCATION | DISTANCE FROM LEFT END OF SPAN (ft) | LIVELOAD FACTORS | DISTRIBUTION FACTORS (DF) | RATING FACTOR | SPAN | GIRDER LOCATION | DISTANCE FROM LEFT END OF SPAN (ft) | |
| DESIGN LOAD RATING | | HL-93(Inv) | N/A | ⟨1⟩ | 1.01 | -- | 1.75 | 0.273 | 1.03 | 70′ | EL | 34.5 | 0.507 | 1.32 | 70′ | EL | 6.9 | 0.80 | 0.273 | **1.01** | 70′ | EL | **34.5** | |
| | | HL-93(Opr) | N/A | -- | 1.34 | -- | 1.35 | 0.273 | 1.34 | 70′ | EL | 34.5 | 0.507 | 1.72 | 70′ | EL | 6.9 | N/A | -- | -- | -- | -- | -- | |
| | | HS-20(Inv) | 36.000 | ⟨2⟩ | 1.31 | 47.02 | 1.75 | 0.273 | 1.34 | 70′ | EL | 34.5 | 0.507 | 1.65 | 70′ | EL | 6.9 | 0.80 | 0.273 | **1.31** | 70′ | EL | **34.5** | |
| | | HS-20(Opr) | 36.000 | -- | 1.74 | 62.64 | 1.35 | 0.273 | 1.74 | 70′ | EL | 34.5 | 0.507 | 2.14 | 70′ | EL | 6.9 | N/A | -- | -- | -- | -- | -- | |
| LEGAL LOAD RATING | SV | SNSH | 13.500 | -- | 2.92 | 39.379 | 1.40 | 0.273 | 3.75 | 70′ | EL | 34.5 | 0.507 | 4.87 | 70′ | EL | 6.9 | 0.80 | 0.273 | 2.92 | 70′ | EL | 34.5 | |
| | | SNGARBS2 | 20.000 | -- | 2.19 | 43.741 | 1.40 | 0.273 | 2.81 | 70′ | EL | 34.5 | 0.507 | 3.47 | 70′ | EL | 6.9 | 0.80 | 0.273 | 2.19 | 70′ | EL | 34.5 | |
| | | SNAGRIS2 | 22.000 | -- | 2.08 | 45.69 | 1.40 | 0.273 | 2.67 | 70′ | EL | 34.5 | 0.507 | 3.23 | 70′ | EL | 6.9 | 0.80 | 0.273 | 2.08 | 70′ | EL | 34.5 | |
| | | SNCOTTS3 | 27.250 | -- | 1.45 | 39.565 | 1.40 | 0.273 | 1.87 | 70′ | EL | 34.5 | 0.507 | 2.43 | 70′ | EL | 6.9 | 0.80 | 0.273 | 1.45 | 70′ | EL | 34.5 | |
| | | SNAGGRS4 | 34.925 | -- | 1.22 | 42.554 | 1.40 | 0.273 | 1.57 | 70′ | EL | 34.5 | 0.507 | 2.03 | 70′ | EL | 6.9 | 0.80 | 0.273 | 1.22 | 70′ | EL | 34.5 | |
| | | SNS5A | 35.550 | -- | 1.19 | 42.346 | 1.40 | 0.273 | 1.53 | 70′ | EL | 34.5 | 0.507 | 2.06 | 70′ | EL | 6.9 | 0.80 | 0.273 | 1.19 | 70′ | EL | 34.5 | |
| | | SNS6A | 39.950 | -- | 1.10 | 43.747 | 1.40 | 0.273 | 1.41 | 70′ | EL | 34.5 | 0.507 | 1.88 | 70′ | EL | 6.9 | 0.80 | 0.273 | 1.10 | 70′ | EL | 34.5 | |
| | | SNS7B | 42.000 | -- | 1.04 | 43.801 | 1.40 | 0.273 | 1.34 | 70′ | EL | 34.5 | 0.507 | 1.85 | 70′ | EL | 6.9 | 0.80 | 0.273 | 1.04 | 70′ | EL | 34.5 | |
| | TTST | TNAGRIT3 | 33.000 | -- | 1.34 | 44.087 | 1.40 | 0.273 | 1.72 | 70′ | EL | 34.5 | 0.507 | 2.23 | 70′ | EL | 6.9 | 0.80 | 0.273 | 1.34 | 70′ | EL | 34.5 | |
| | | TNT4A | 33.075 | -- | 1.34 | 44.401 | 1.40 | 0.273 | 1.72 | 70′ | EL | 34.5 | 0.507 | 2.17 | 70′ | EL | 6.9 | 0.80 | 0.273 | 1.34 | 70′ | EL | 34.5 | |
| | | TNT6A | 41.600 | -- | 1.10 | 45.746 | 1.40 | 0.273 | 1.41 | 70′ | EL | 34.5 | 0.507 | 1.98 | 70′ | EL | 6.9 | 0.80 | 0.273 | 1.10 | 70′ | EL | 34.5 | |
| | | TNT7A | 42.000 | -- | 1.11 | 46.462 | 1.40 | 0.273 | 1.42 | 70′ | EL | 34.5 | 0.507 | 1.94 | 70′ | EL | 6.9 | 0.80 | 0.273 | 1.11 | 70′ | EL | 34.5 | |
| | | TNT7B | 42.000 | -- | 1.15 | 48.18 | 1.40 | 0.273 | 1.47 | 70′ | EL | 34.5 | 0.507 | 1.8 | 70′ | EL | 6.9 | 0.80 | 0.273 | 1.15 | 70′ | EL | 34.5 | |
| | | TNAGRIT4 | 43.000 | -- | 1.09 | 46.838 | 1.40 | 0.273 | 1.4 | 70′ | EL | 34.5 | 0.507 | 1.74 | 70′ | EL | 6.9 | 0.80 | 0.273 | 1.09 | 70′ | EL | 34.5 | |
| | | TNAGT5A | 45.000 | -- | 1.03 | 46.175 | 1.40 | 0.273 | 1.32 | 70′ | EL | 34.5 | 0.507 | 1.74 | 70′ | EL | 6.9 | 0.80 | 0.273 | 1.03 | 70′ | EL | 34.5 | |
| | | TNAGT5B | 45.000 | ⟨3⟩ | 1.01 | 45.579 | 1.40 | 0.273 | 1.3 | 70′ | EL | 34.5 | 0.507 | 1.66 | 70′ | EL | 6.9 | 0.80 | 0.273 | **1.01** | 70′ | EL | **34.5** | |

## LOAD FACTORS:

| DESIGN LOAD RATING FACTORS | LIMIT STATE | $\gamma_{DC}$ | $\gamma_{DW}$ |
|---|---|---|---|
| | STRENGTH I | 1.25 | 1.50 |
| | SERVICE III | 1.00 | 1.00 |

## NOTES:

MINIMUM RATING FACTORS ARE BASED ON THE STRENGTH I AND SERVICE III LIMIT STATES.

ALLOWABLE STRESSES FOR SERVICE III LIMIT STATE ARE AS REQUIRED FOR DESIGN.

## COMMENTS:

1.

2.

3.

4.

⟨#⟩ CONTROLLING LOAD RATING

⟨1⟩ DESIGN LOAD RATING (HL-93)

⟨2⟩ DESIGN LOAD RATING (HS-20)

⟨3⟩ LEGAL LOAD RATING **

** SEE CHART FOR VEHICLE TYPE

GIRDER LOCATION

I - INTERIOR GIRDER
EL - EXTERIOR LEFT GIRDER
ER - EXTERIOR RIGHT GIRDER

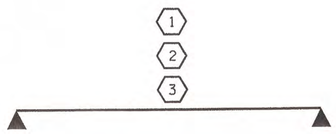


LRFR SUMMARY

FOR SPAN 'A'

PROJECT NO. BD-5109I

DAVIDSON COUNTY

STATION: 13+55.00 -L-

STATE OF NORTH CAROLINA
DEPARTMENT OF TRANSPORTATION
RALEIGH

STANDARD

# LRFR SUMMARY FOR 70′ CORED SLAB UNIT 90° SKEW

(NON-INTERSTATE TRAFFIC)

NORTH CAROLINA PROFESSIONAL SEAL 10730 ENGINEER D. ANDRE DAVENPORT

| REVISIONS | | | | | | SHEET NO. |
|---|---|---|---|---|---|---|
| NO. | BY: | DATE: | NO. | BY: | DATE: | S-3 |
| 1 | | | 3 | | | TOTAL SHEETS |
| 2 | | | 4 | | | 12 |

ASSEMBLED BY : D.A. DAVENPORT DATE : 03/14/12
CHECKED BY : M.H. ALI DATE : 03/19/12

DRAWN BY : CVC 6/10
CHECKED BY : DNS 6/10

20-MAR-2012 07:05
R:\Structures\PLANS\BD5109I_SD_CS.dgn
adavenport

STD. NO. 24LRFR1_90S_70L

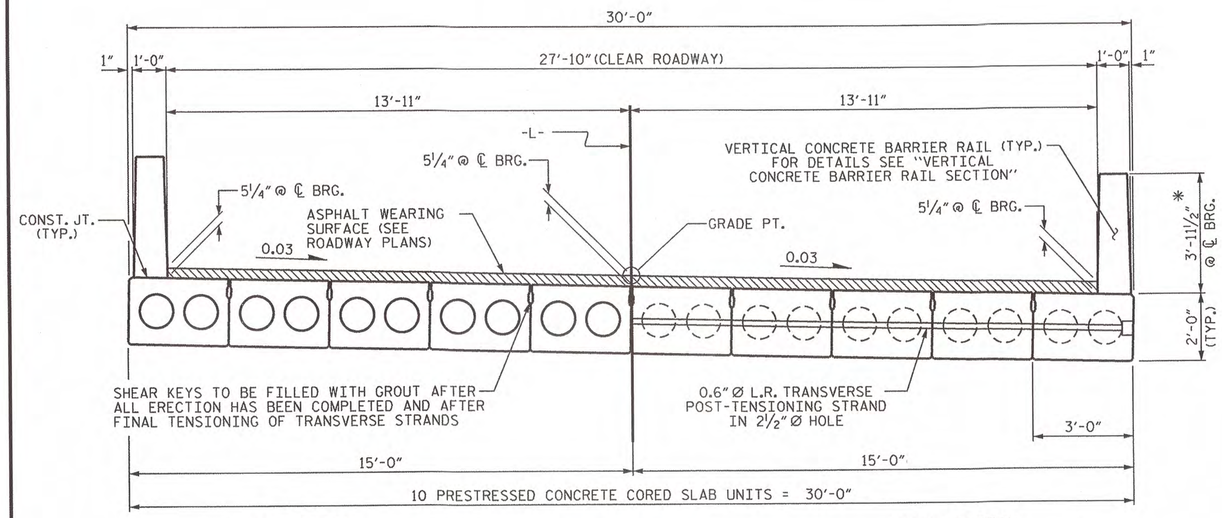


HALF SECTION THROUGH VOIDS

HALF SECTION AT INTERMEDIATE DIAPHRAGMS

# TYPICAL SECTION

* - THE MAXIMUM BARRIER RAIL HEIGHT AND ASPHALT THICKNESS IS SHOWN. THE HEIGHT OF THE BARRIER RAIL AND ASPHALT THICKNESS VARIES WHILE THE TOP OF THE BARRIER RAIL FOLLOWS THE PROFILE OF THE GUTTERLINE. FOR RAIL HEIGHT DETAILS AND ASPHALT THICKNESS, SEE THE "VERTICAL CONCRETE BARRIER RAIL SECTION" DETAIL.

FIXED END

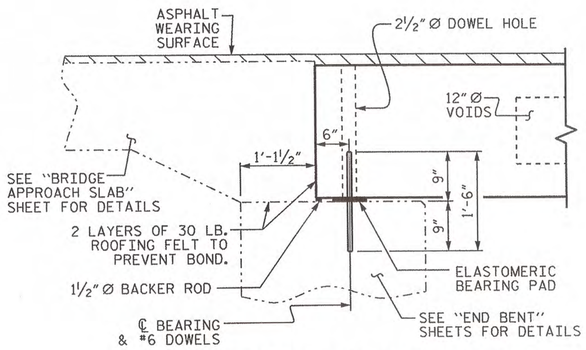


## SECTION AT END BENT

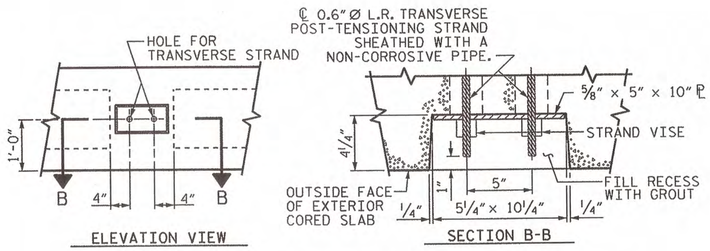


ELEVATION VIEW

SECTION B-B

## GROUTED RECESS AT END OF POST-TENSIONED STRAND CORED SLABS

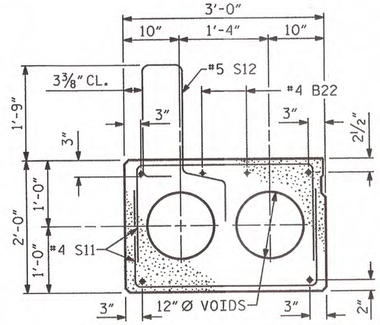


## EXTERIOR SLAB SECTION

(FOR PRESTRESSED STRAND LAYOUT, SEE INTERIOR SLAB SECTION.)

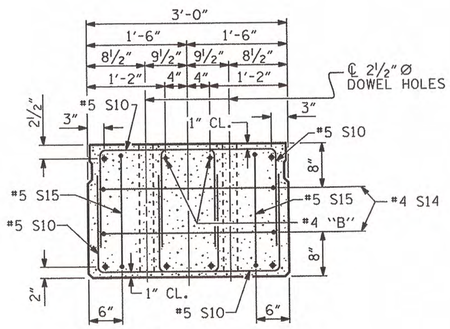


## END ELEVATION

SHOWING PLACEMENT OF DOUBLE STIRRUPS AND LOCATION OF DOWEL HOLES. (STRAND LAYOUT NOT SHOWN.) INTERIOR SLAB UNIT SHOWN-EXTERIOR SLAB UNIT SIMILAR EXCEPT SHEAR KEY LOCATION.

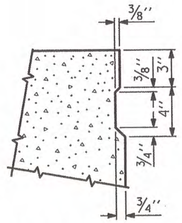


## SHEAR KEY DETAIL

NOTE: OMIT SHEAR KEY ON OUTSIDE FACE OF EXTERIOR CORED SLABS.

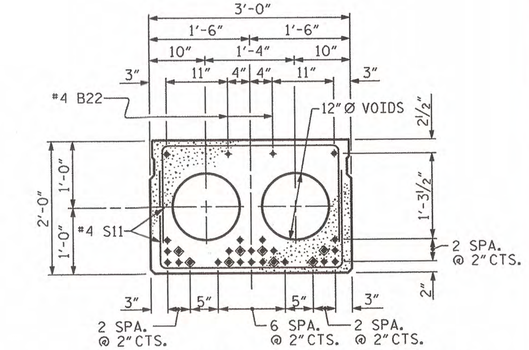


## INTERIOR SLAB SECTION (70' UNIT)

(28 STRANDS REQUIRED)

## 0.6" Ø LOW RELAXATION STRAND LAYOUT

◈ BOND SHALL BE BROKEN ON THESE STRANDS FOR A DISTANCE OF 12'-0" FROM END OF CORED SLAB UNIT. SEE STANDARD SPECIFICATIONS, ARTICLE 1078-7.

## DEBONDING LEGEND

PROJECT NO. BD-5109I

DAVIDSON COUNTY

STATION: 13+55.00 -L-

SHEET 1 OF 3

STATE OF NORTH CAROLINA
DEPARTMENT OF TRANSPORTATION
RALEIGH

STANDARD

# 3'-0" X 2'-0" PRESTRESSED CONCRETE CORED SLAB UNIT

NORTH CAROLINA PROFESSIONAL SEAL 10730 ENGINEER D. ANDREW DAVENPORT, JR.
3-27-12

| REVISIONS | | | | | | SHEET NO. |
|---|---|---|---|---|---|---|
| NO. | BY: | DATE: | NO. | BY: | DATE: | S-4 |
| 1 | | | 3 | | | TOTAL SHEETS |
| 2 | | | 4 | | | 12 |

| | | |
|---|---|---|
| ASSEMBLED BY : D.A. DAVENPORT | DATE : 03/14/12 | |
| CHECKED BY : M.H.-ALI | DATE : 03/19/12 | |
| DRAWN BY : MAA | 6/10 | REV. 12/11 MAA/AAC |
| CHECKED BY : MKT | 7/10 | |

27-MAR-2012 09:58
R:\Structures\PLANS\BD5109I_SD_CS.dgn
ddavenport

STD. NO. 24PCS4_30_90S

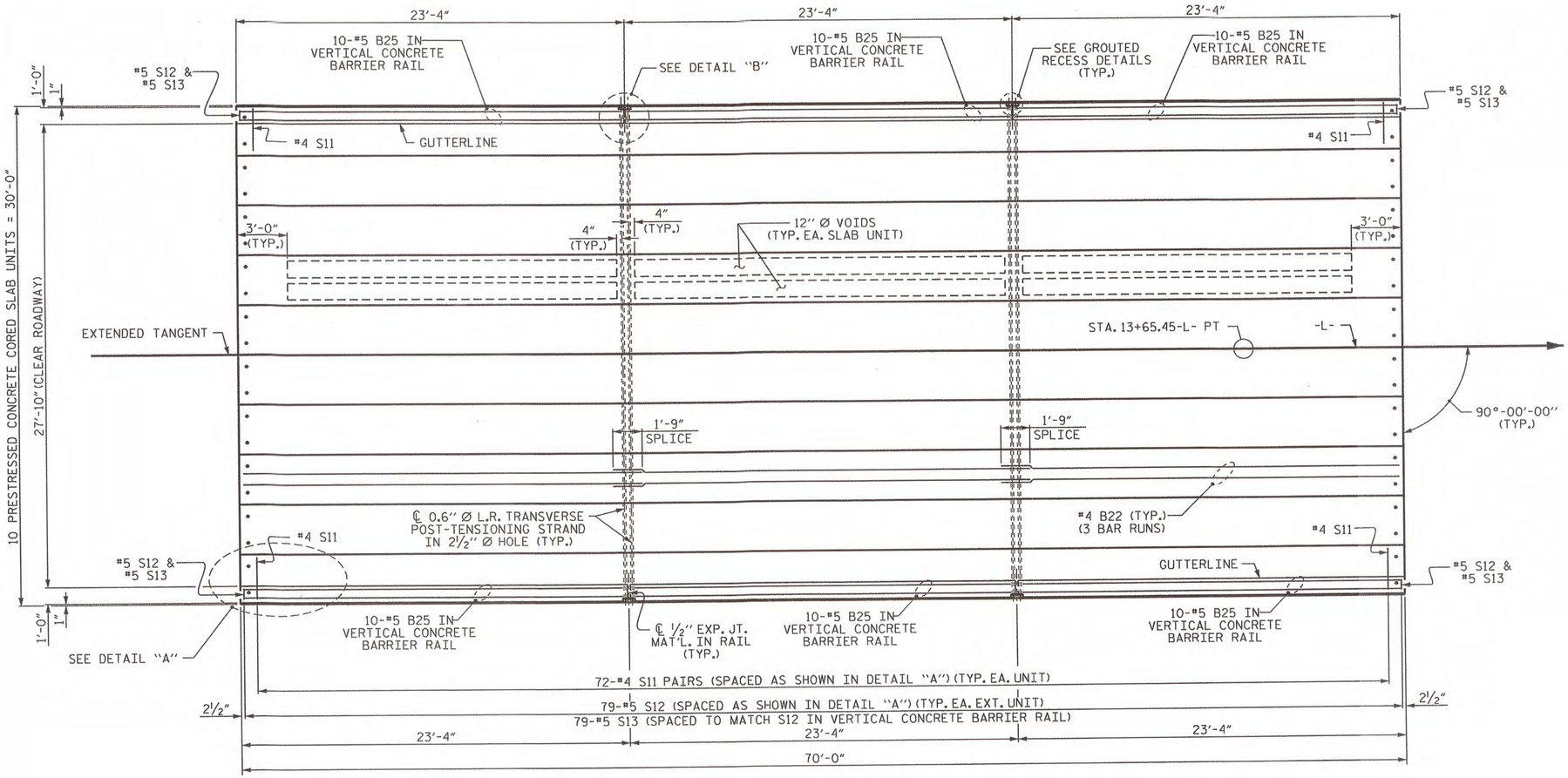


## PLAN OF UNIT

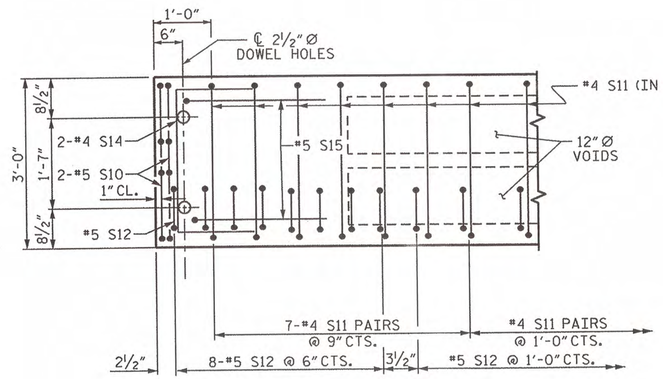


## DETAIL "A"

NOTE: EXTERIOR UNIT SHOWN - INTERIOR UNIT SIMILAR EXCEPT OMIT #5 S12 BARS.

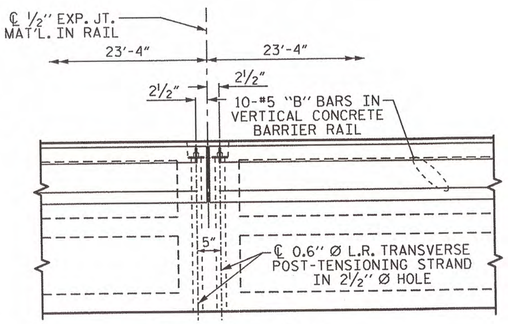


## DETAIL "B"

#4 S11 BARS MAY BE SHIFTED AS NECESSARY TO MAINTAIN 1" CLEAR TO GROUTED RECESS AND 2½" Ø TRANSVERSE POST-TENSIONING STRAND HOLES

ASSEMBLED BY : D.A. DAVENPORT DATE : 03/14/12
CHECKED BY : M.H. ALI DATE : 03/19/12

DRAWN BY : MAA 6/10
CHECKED BY : MKT 7/10

REV. 12/5/11 MAA/AAC

27-MAR-2012 09:57
R:\Structures\PLANS\BD5109I_SD_CS.dgn
addavenport

NORTH CAROLINA PROFESSIONAL SEAL 10730 ENGINEER D. ANDREW DAVENPORT
3-27-12

PROJECT NO. BD-5109I
DAVIDSON COUNTY
STATION: 13+55.00 -L-

SHEET 2 OF 3

STATE OF NORTH CAROLINA
DEPARTMENT OF TRANSPORTATION
RALEIGH

# PLAN OF 70' UNIT 27'-10" CLEAR ROADWAY 90° SKEW

| REVISIONS | | | | | | SHEET NO. |
|---|---|---|---|---|---|---|
| NO. | BY: | DATE: | NO. | BY: | DATE: | S-5 |
| 1 | | | 3 | | | TOTAL SHEETS |
| 2 | | | 4 | | | 12 |

STD. NO. 24PCS_30_90S_70L

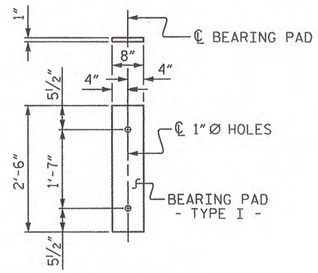


FIXED END
( TYPE I - 20 REQ'D )

# ELASTOMERIC BEARING DETAILS

ELASTOMER IN ALL BEARINGS SHALL BE 60 DUROMETER HARDNESS.

| GRADE 270 STRANDS | |
|---|---|
| | 0.6"Ø L.R. |
| AREA ( SQUARE INCHES ) | 0.217 |
| ULTIMATE STRENGTH ( LBS. PER STRAND ) | 58,600 |
| APPLIED PRESTRESS ( LBS. PER STRAND ) | 43,950 |

| CORED SLABS REQUIRED | | | |
|---|---|---|---|
| | NUMBER | LENGTH | TOTAL LENGTH |
| 70' UNIT | | | |
| EXTERIOR C.S. | 2 | 70'-0" | 140'-0" |
| INTERIOR C.S. | 8 | 70'-0" | 560'-0" |
| TOTAL | 10 | - | 700'-0" |

| DEAD LOAD DEFLECTION AND CAMBER | |
|---|---|
| | 3'-0" x 2'-0" |
| 70' CORED SLAB UNIT | 0.6"Ø L.R. STRAND |
| CAMBER ( SLAB ALONE IN PLACE ) | 4 5/16" ↑ |
| DEFLECTION DUE TO SUPERIMPOSED DEAD LOAD** | 13/16" ↓ |
| FINAL CAMBER | 3½" ↑ |

** INCLUDES FUTURE WEARING SURFACE

## BAR TYPES

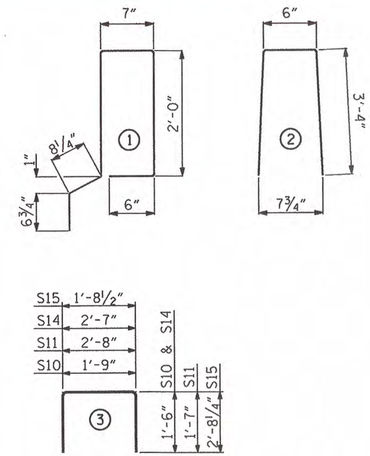


ALL BAR DIMENSIONS ARE OUT TO OUT

| GUTTERLINE ASPHALT THICKNESS & RAIL HEIGHT | | |
|---|---|---|
| | ASPHALT OVERLAY THICKNESS @ MID-SPAN | RAIL HEIGHT @ MID-SPAN |
| 70' UNITS | 1¾" | 3'-8" |

## NOTES

ALL PRESTRESSING STRANDS SHALL BE 7-WIRE LOW RELAXATION GRADE 270 STRANDS AND SHALL CONFORM TO AASHTO M203 EXCEPT FOR SAMPLING REQUIREMENTS WHICH SHALL BE IN ACCORDANCE WITH THE STANDARD SPECIFICATIONS.

ALL REINFORCING STEEL CAST WITH THE CORED SLAB SECTIONS SHALL BE GRADE 60 AND SHALL BE INCLUDED IN THE UNIT PRICE BID FOR PRESTRESSED CONCRETE CORED SLABS.

RECESSES FOR TRANSVERSE STRANDS SHALL BE GROUTED AFTER THE TENSIONING OF THE STRANDS.

THE 2½"Ø DOWEL HOLES AT FIXED ENDS OF SLAB SECTIONS SHALL BE FILLED WITH NON-SHRINK GROUT.

THE BACKER RODS SHALL CONFORM TO THE REQUIREMENTS OF TYPE M BOND BREAKER. SEE SECTION 1028 OF THE STANDARD SPECIFICATIONS.

WHEN CORED SLABS ARE CAST, AN INTERNAL HOLD-DOWN SYSTEM SHALL BE EMPLOYED TO PREVENT VOIDS FROM RISING OR MOVING SIDEWAYS. AT LEAST SIX WEEKS PRIOR TO CASTING CORED SLABS, THE CONTRACTOR SHALL SUBMIT TO THE ENGINEER FOR REVIEW AND COMMENT, DETAILED DRAWINGS OF THE PROPOSED HOLD-DOWN SYSTEM. IN ADDITION TO STRUCTURAL DETAILS, LOCATION AND SPACING OF THE HOLD-DOWNS SHALL BE INDICATED.

THE TRANSFER OF LOAD FROM THE ANCHORAGES TO THE CORED SLAB UNIT SHALL BE DONE WHEN THE CONCRETE HAS REACHED A COMPRESSIVE STRENGTH OF NOT LESS THAN THE REQUIRED STRENGTH SHOWN IN THE "CONCRETE RELEASE STRENGTH" TABLE.

ALL REINFORCING STEEL IN VERTICAL CONCRETE BARRIER RAILS SHALL BE EPOXY COATED.

PRESTRESSING STRANDS SHALL BE CUT FLUSH WITH THE CORED SLAB UNIT ENDS.

APPLY EPOXY PROTECTIVE COATING TO CORED SLAB UNIT ENDS.

GROOVED CONTRACTION JOINTS, ½" IN DEPTH, SHALL BE TOOLED IN ALL EXPOSED FACES OF THE BARRIER RAIL AND IN ACCORDANCE WITH ARTICLE 825-10(B) OF THE STANDARD SPECIFICATIONS. A CONTRACTION JOINT SHALL BE LOCATED AT EACH THIRD POINT BETWEEN BARRIER RAIL EXPANSION JOINTS. ONLY ONE CONTRACTION JOINT IS REQUIRED AT MIDPOINT OF BARRIER RAIL SEGMENTS LESS THAN 20 FEET IN LENGTH AND NO CONTRACTION JOINTS ARE REQUIRED FOR THOSE SEGMENTS LESS THAN 10 FEET IN LENGTH.

TRANSVERSE POST TENSIONING OF THE CORED SLAB UNITS SHALL BE DONE IN ACCORDANCE WITH THE STANDARD SPECIFICATIONS.

MAINTAIN A SYMMETRIC TENSION FORCE BETWEEN EACH PAIR OF TRANSVERSE POST TENSIONING STRANDS IN THE DIAPHRAGM.

THE #4 S11 STIRRUPS MAY BE SHIFTED AS NECESSARY TO MAINTAIN 1" CLEAR TO THE GROUTED RECESS.

FOR GROUT FOR STRUCTURES, SEE SPECIAL PROVISIONS.

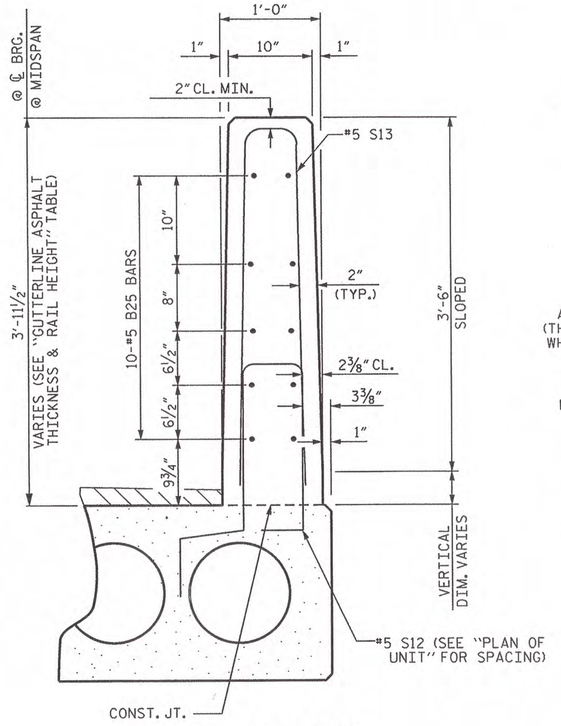


SECTION THRU RAIL

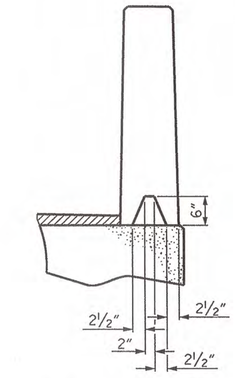


SECTION S-S
AT DAM IN OPEN JOINT
(THIS IS TO BE USED ONLY WHEN SLIP FORM IS USED)

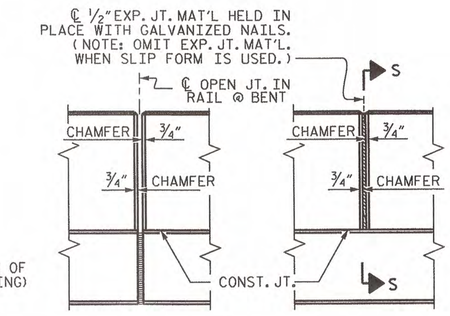


ELEVATION AT EXPANSION JOINTS

| BILL OF MATERIAL FOR VERTICAL CONCRETE BARRIER RAIL | | | | | | |
|---|---|---|---|---|---|---|
| BAR | BARS PER PAIR OF EXTERIOR UNITS 70' UNIT | TOTAL NO. | SIZE | TYPE | LENGTH | WEIGHT |
| *B25 | 60 | 60 | #5 | STR | 22'-11" | 1434 |
| *S13 | 158 | 158 | #5 | 2 | 7'-2" | 1181 |
| *EPOXY COATED REINFORCING STEEL | | | | LBS. | | 2615 |
| CLASS AA CONCRETE | | | | CU.YDS. | | 18.9 |
| TOTAL VERTICAL CONCRETE BARRIER RAIL | | | | LN. FT. | | 140.25 |

| BILL OF MATERIAL FOR ONE 70' CORED SLAB UNIT | | | | | | | |
|---|---|---|---|---|---|---|---|
| | | | | EXTERIOR UNIT | | INTERIOR UNIT | |
| BAR | NUMBER | SIZE | TYPE | LENGTH | WEIGHT | LENGTH | WEIGHT |
| B22 | 6 | #4 | STR | 24'-6" | 98 | 24'-6" | 98 |
| S10 | 8 | #5 | 3 | 4'-9" | 40 | 4'-9" | 40 |
| S11 | 144 | #4 | 3 | 5'-10" | 561 | 5'-10" | 561 |
| *S12 | 79 | #5 | 1 | 6'-4" | 522 | | |
| S14 | 4 | #4 | 3 | 5'-7" | 15 | 5'-7" | 15 |
| S15 | 4 | #5 | 3 | 7'-1" | 30 | 7'-1" | 30 |
| REINFORCING STEEL | | | LBS. | | 744 | | 744 |
| *EPOXY COATED REINFORCING STEEL | | | LBS. | | 522 | | |
| 7000 P.S.I. CONCRETE | | | CU. YDS. | | 11.8 | | 11.8 |
| 0.6"Ø L.R. STRANDS | | | No. | | 28 | | 28 |

| CONCRETE RELEASE STRENGTH | |
|---|---|
| | |
| UNIT | PSI |
| 70' UNITS | 5500 |

PROJECT NO. BD-5109I
DAVIDSON COUNTY
STATION: 13+55.00 -L-
SHEET 3 OF 3

STATE OF NORTH CAROLINA
DEPARTMENT OF TRANSPORTATION
RALEIGH

STANDARD
3'-0" X 2-0"
PRESTRESSED CONCRETE
CORED SLAB UNIT




3-22-12

| REVISIONS | | | | | | SHEET NO. |
|---|---|---|---|---|---|---|
| NO. | BY: | DATE: | NO. | BY: | DATE: | S-6 |
| 1 | | | 3 | | | TOTAL SHEETS |
| 2 | | | 4 | | | 12 |

| | | |
|---|---|---|
| ASSEMBLED BY : D.A. DAVENPORT | DATE : 03/14/12 | |
| CHECKED BY : M.H. ALI | DATE : 03/19/12 | |
| DRAWN BY : MAA | 6/10 | REV. 12/11 MAA/AAC |
| CHECKED BY : MKT | 7/10 | |

27-MAR-2012 09:57
R:\Structures\PLANS\BD5109I_SD_CS.dgn
ddavenport

STD. NO. 24PCS3_30_90S

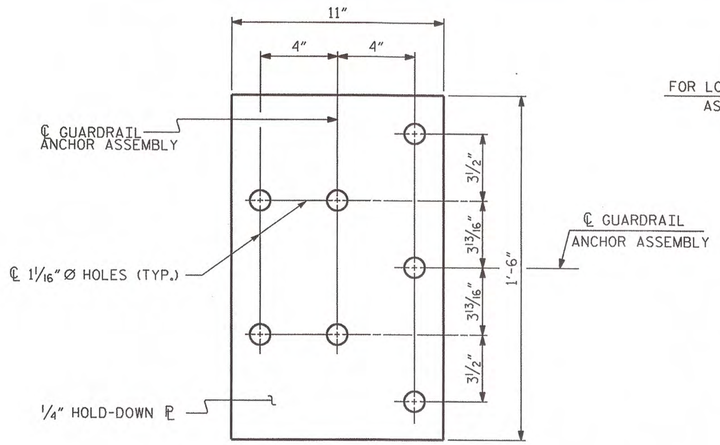


PLAN

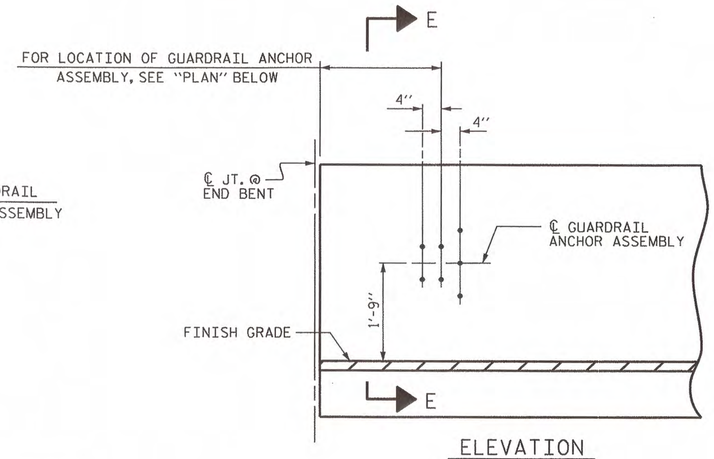


ELEVATION

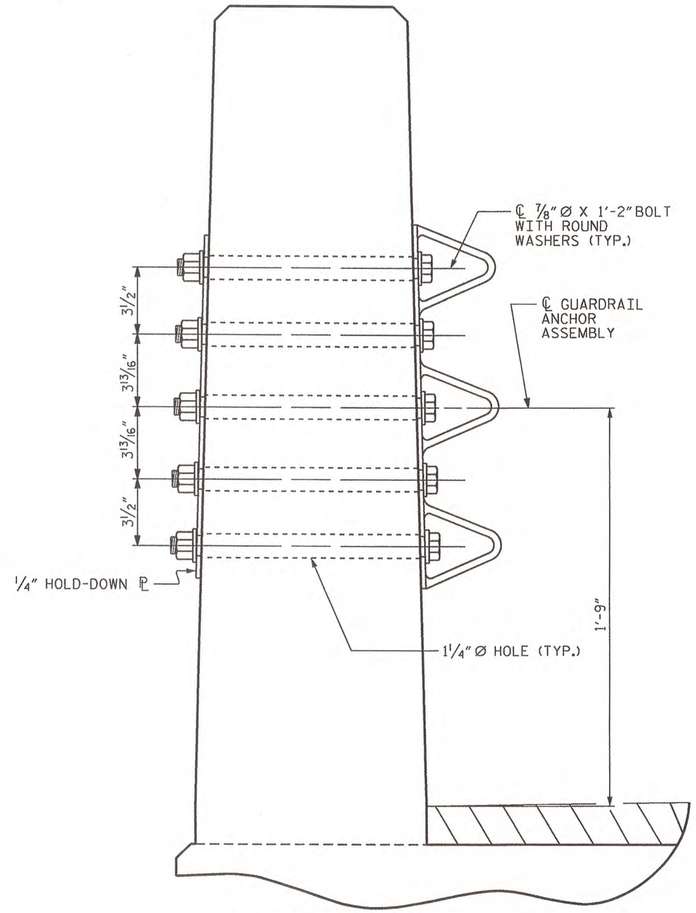


SECTION E-E

## GUARDRAIL ANCHOR ASSEMBLY DETAILS

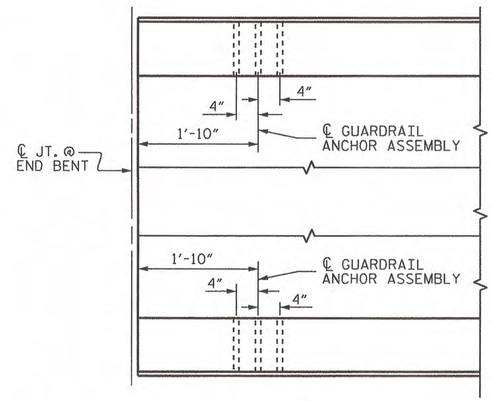


PLAN

## LOCATION OF ANCHORS FOR GUARDRAIL

END BENT #1 SHOWN, END BENT #2 SIMILAR.

## NOTES

THE GUARDRAIL ANCHOR ASSEMBLY SHALL CONSIST OF A 1/4" HOLD DOWN PLATE AND 7 - 7/8" Ø BOLTS WITH NUTS AND WASHERS.

THE HOLD-DOWN PLATE SHALL CONFORM TO AASHTO M270 GRADE 36. AFTER FABRICATION, THE HOLD-DOWN PLATE SHALL BE HOT-DIP GALVANIZED IN ACCORDANCE WITH AASHTO M111.

BOLTS SHALL CONFORM TO THE REQUIREMENTS OF ASTM A307 AND NUTS SHALL CONFORM TO THE REQUIREMENTS OF AASHTO M291. BOLTS, NUTS AND WASHERS SHALL BE GALVANIZED. (AT THE CONTRACTOR'S OPTION, STAINLESS STEEL BOLTS, NUTS AND WASHERS MAY BE USED AS AN ALTERNATE FOR THE 7/8" Ø GALVANIZED BOLTS, NUTS AND WASHERS. THEY SHALL CONFORM TO OR EXCEED THE MECHANICAL REQUIREMENTS OF ASTM A307. THE USE OF THIS ALTERNATE SHALL BE APPROVED BY THE ENGINEER.)

THE GUARDRAIL ANCHOR ASSEMBLY IS REQUIRED AT ALL POINTS WHERE APPROACH GUARDRAIL IS TO BE ATTACHED TO THE END OF BARRIER RAIL. FOR POINTS OF ATTACHMENT, SEE SKETCH.

AFTER INSTALLATION, THE EXPOSED THREAD OF THE BOLT SHALL BE BURRED WITH A SHARP POINTED TOOL.

THE COST OF THE GUARDRAIL ANCHOR ASSEMBLY SHALL BE INCLUDED IN THE UNIT CONTRACT PRICE BID FOR VERTICAL CONCRETE BARRIER RAIL.

THE VERTICAL REINFORCING BARS MAY BE SHIFTED SLIGHTLY IN THE VERTICAL CONCRETE BARRIER RAIL TO CLEAR ASSEMBLY BOLTS.

THE 1 1/4" Ø HOLES SHALL BE FORMED OR DRILLED WITH A CORE BIT. IMPACT TOOLS WILL NOT BE PERMITTED. ANY CONCRETE DAMAGED BY THIS WORK SHALL BE REPAIRED TO THE SATISFACTION OF THE ENGINEER.

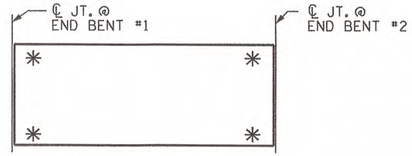


## SKETCH SHOWING POINTS OF ATTACHMENT

* DENOTES GUARDRAIL ANCHOR ASSEMBLY

PROJECT NO. BD-5109I

DAVIDSON COUNTY

STATION: 13+55.00 -L-

STATE OF NORTH CAROLINA
DEPARTMENT OF TRANSPORTATION
RALEIGH

STANDARD
# GUARDRAIL ANCHORAGE FOR VERTICAL CONCRETE BARRIER RAIL

NORTH CAROLINA PROFESSIONAL SEAL 10730 ENGINEER D. ANDREW DAVENPORT, JR.
3-20-12

| REVISIONS | | | | | | SHEET NO. |
|---|---|---|---|---|---|---|
| NO. | BY: | DATE: | NO. | BY: | DATE: | S-7 |
| 1 | | | 3 | | | TOTAL SHEETS |
| 2 | | | 4 | | | 12 |

| | |
|---|---|
| ASSEMBLED BY : D.A. DAVENPORT | DATE : 03/14/12 |
| CHECKED BY : M.H. ALI | DATE : 03/19/12 |
| DRAWN BY : MAA 5/10 | ADDED 5/6/10 |
| CHECKED BY : GM 5/10 | REV. 10/1/11 MAA/GM |
| | REV. 12/5/11 MAA/GM |

20-MAR-2012 07:05
R:\Structures\PLANS\BD5109I_SD_CS.dgn
ddavenport

(SHT 1) STD. NO. GRA3

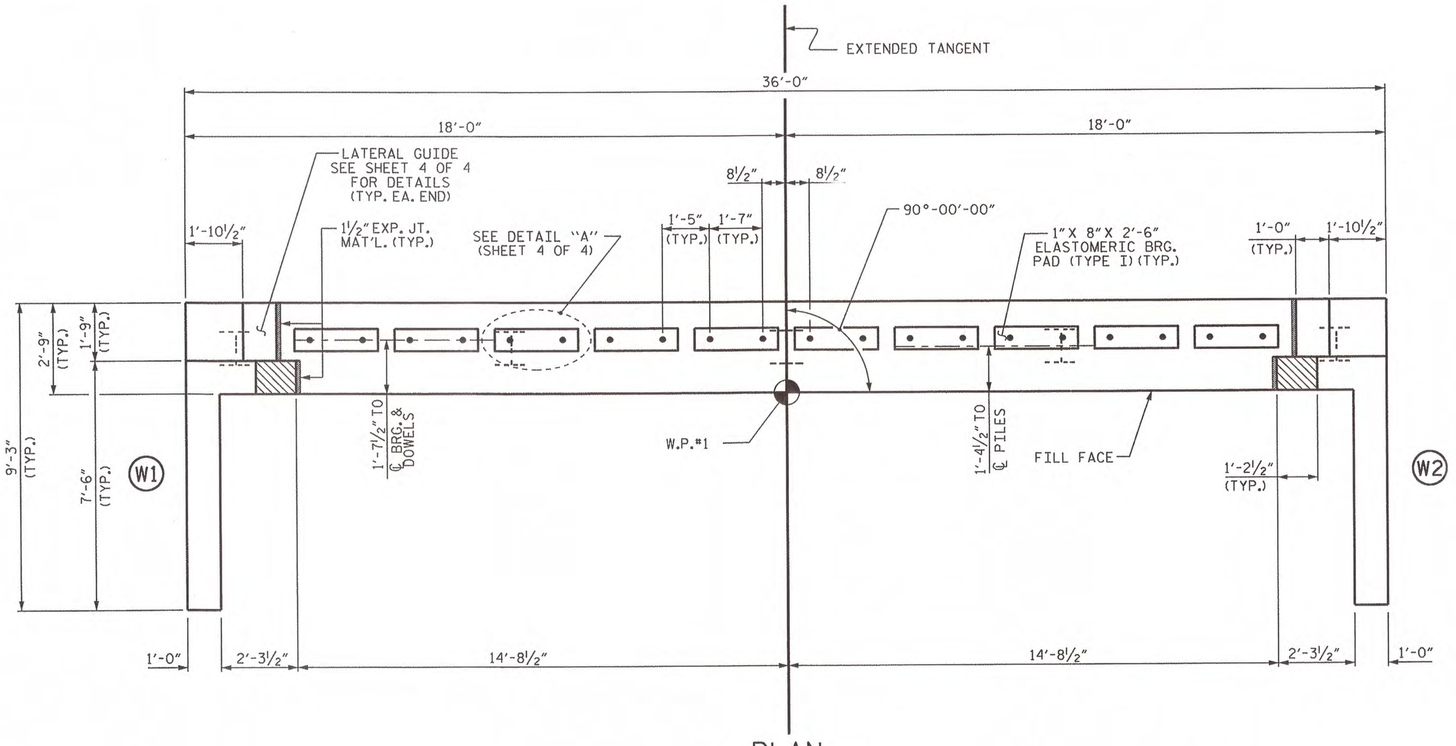


## PLAN

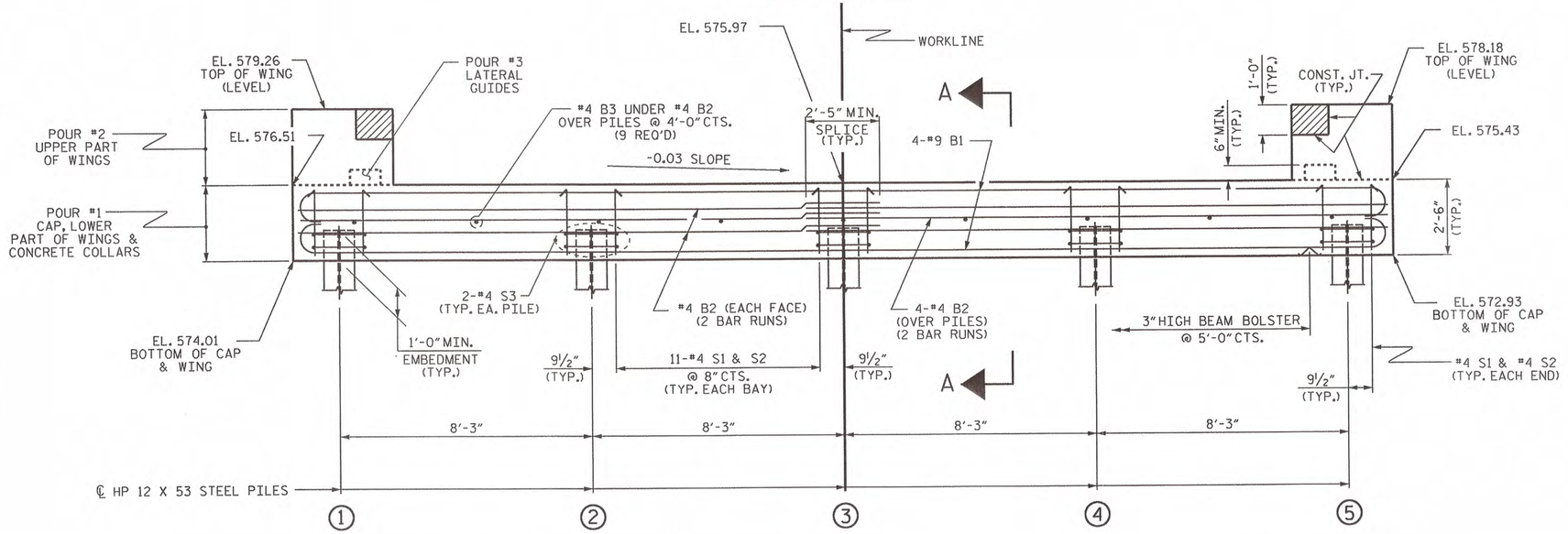


## ELEVATION

WINGS NOT SHOWN FOR CLARITY.
FOR SECTION A-A, SEE SHEET 4 OF 4.
CONCRETE COLLARS FOR STEEL PILES NOT SHOWN IN PLAN AND ELEVATION VIEWS FOR CLARITY.
SEE "CORROSION PROTECTION FOR STEEL PILES DETAIL", SHEET 4 OF 4.

## NOTES

STIRRUPS IN CAP MAY BE SHIFTED AS NECESSARY TO CLEAR DOWELS.

THE LATERAL GUIDES ARE NOT TO BE POURED UNTIL AFTER THE CORED SLAB UNITS ARE IN PLACE.

THE CONCRETE IN THE SHADED AREA OF THE WING SHALL BE POURED AFTER THE VERTICAL CONCRETE BARRIER RAIL IS CAST IF SLIP FORMING IS USED.

FOR PILE SPLICE DETAILS, SEE SHEET 4 OF 4.

FOR WING DETAILS, SEE SHEET 3 OF 4.

THE CONTRACTOR HAS THE OPTION TO OMIT THE LATERAL GUIDE IF APPROVED BY THE ENGINEER.

| TOP OF PILE ELEVATIONS | |
|---|---|
| ① | 574.98 |
| ② | 574.73 |
| ③ | 574.49 |
| ④ | 574.24 |
| ⑤ | 573.99 |

PROJECT NO. BD-5109I
DAVIDSON COUNTY
STATION: 13+55.00 -L-

SHEET 1 OF 4

STATE OF NORTH CAROLINA
DEPARTMENT OF TRANSPORTATION
RALEIGH

SUBSTRUCTURE

END BENT No. 1

| REVISIONS | | | | | | SHEET NO. |
|---|---|---|---|---|---|---|
| NO. | BY: | DATE: | NO. | BY: | DATE: | S-8 |
| 1 | | | 3 | | | TOTAL SHEETS |
| 2 | | | 4 | | | 12 |

NORTH CAROLINA PROFESSIONAL SEAL 10730 ENGINEER D. ANDREW DAVENPORT, JR.
3-27-12

| | | |
|---|---|---|
| ASSEMBLED BY : D.A. DAVENPORT | DATE : 03/14/12 | |
| CHECKED BY : M.H. ALI | DATE : 03/19/12 | |
| DRAWN BY : DGE | 02/10 | |
| CHECKED BY : MKT | 02/10 | |

27-MAR-2012 09:58
R:\Structures\PLANS\BD5109I_SD_CS.dgn
adavenport

STD. NO. EB_30_90S

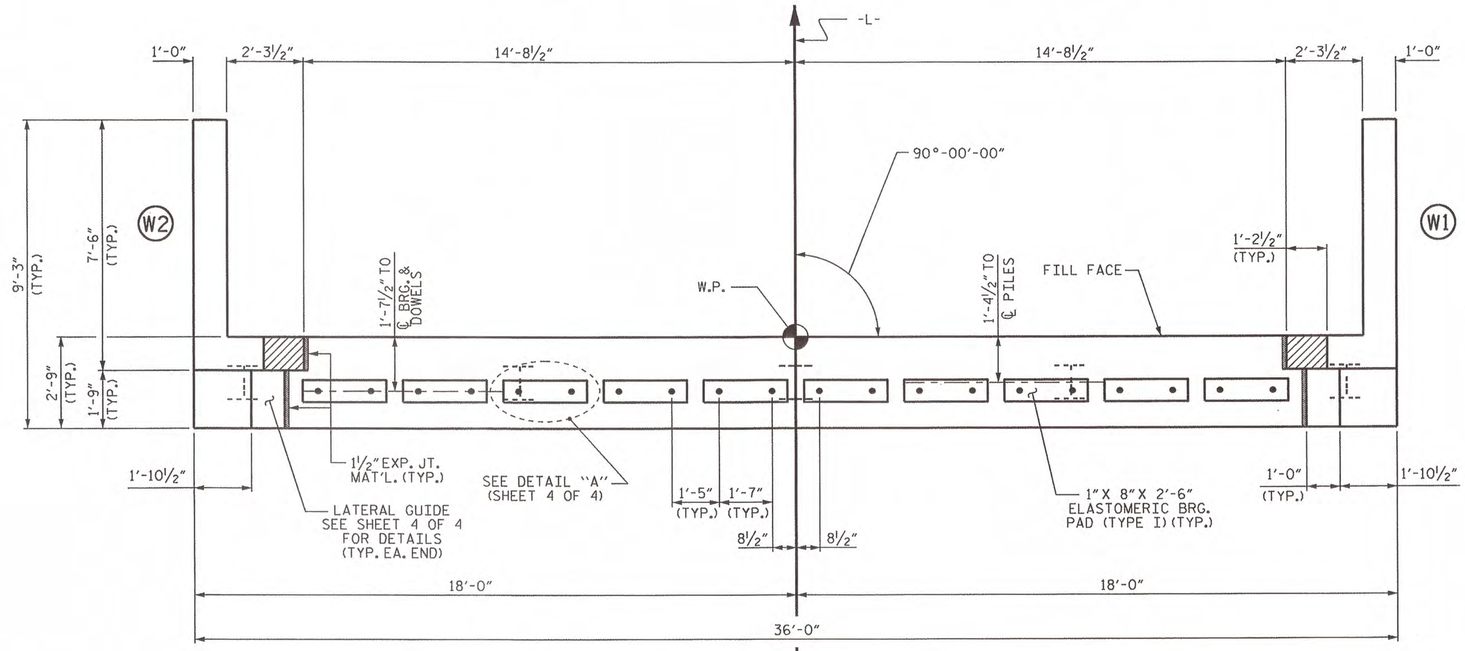


PLAN

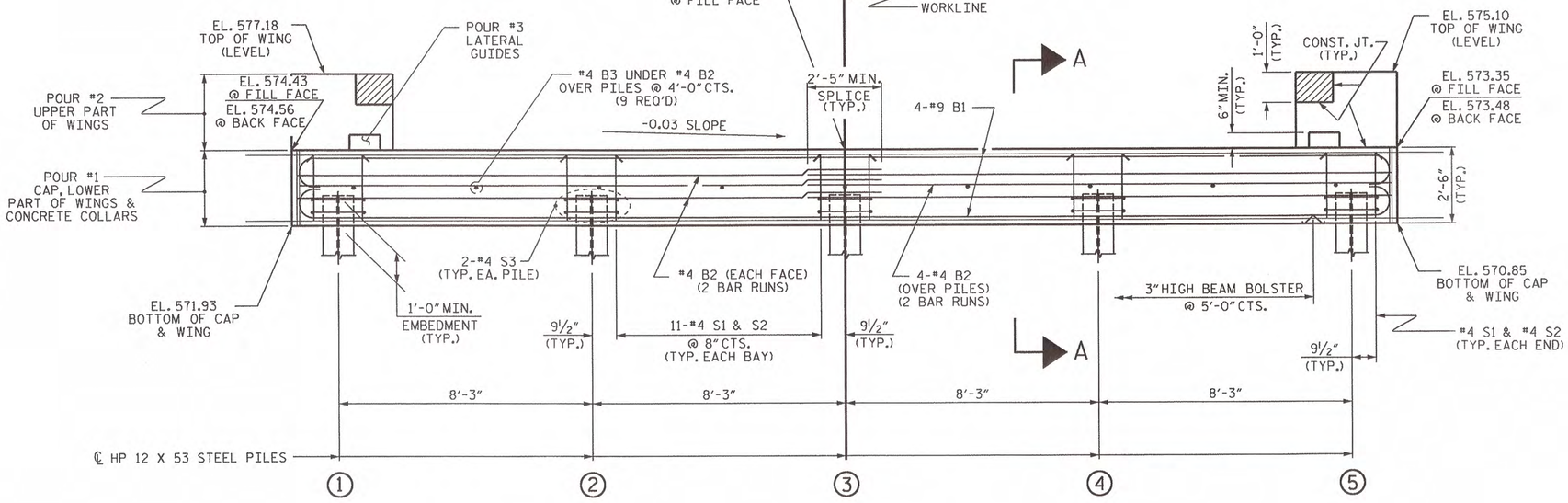


ELEVATION

WINGS NOT SHOWN FOR CLARITY.
FOR SECTION A-A, SEE SHEET 4 OF 4.
CONCRETE COLLARS FOR STEEL PILES NOT SHOWN IN PLAN AND ELEVATION VIEWS FOR CLARITY.
SEE "CORROSION PROTECTION FOR STEEL PILES DETAIL", SHEET 4 OF 4.

## NOTES

STIRRUPS IN CAP MAY BE SHIFTED AS NECESSARY TO CLEAR DOWELS.

THE LATERAL GUIDES ARE NOT TO BE POURED UNTIL AFTER THE CORED SLAB UNITS ARE IN PLACE.

THE CONCRETE IN THE SHADED AREA OF THE WING SHALL BE POURED AFTER THE VERTICAL CONCRETE BARRIER RAIL IS CAST IF SLIP FORMING IS USED.

FOR PILE SPLICE DETAILS, SEE SHEET 4 OF 4.

FOR WING DETAILS, SEE SHEET 3 OF 4.

THE CONTRACTOR HAS THE OPTION TO OMIT THE LATERAL GUIDE IF APPROVED BY THE ENGINEER.

| TOP OF PILE ELEVATIONS | |
|---|---|
| ① | 572.90 |
| ② | 572.65 |
| ③ | 572.41 |
| ④ | 572.16 |
| ⑤ | 571.91 |

PROJECT NO. BD-5109I
DAVIDSON COUNTY
STATION: 13+55.00 -L-

SHEET 2 OF 4

STATE OF NORTH CAROLINA
DEPARTMENT OF TRANSPORTATION
RALEIGH

SUBSTRUCTURE

END BENT No. 2

NORTH CAROLINA PROFESSIONAL SEAL 10730 ENGINEER D. ANDRE' DAVENPORT, JR.
4-4-12

| REVISIONS | | | | | | SHEET NO. |
|---|---|---|---|---|---|---|
| NO. | BY: | DATE: | NO. | BY: | DATE: | S-9 |
| 1 | | | 3 | | | TOTAL SHEETS |
| 2 | | | 4 | | | 12 |

ASSEMBLED BY : D.A. DAVENPORT DATE : 03/15/12
CHECKED BY : M.H. ALI DATE : 03/19/12
DRAWN BY : DGE 02/10
CHECKED BY : MKT 02/10

04-APR-2012 13:44
R:\Structures\PLANS\BD5109I_SD_CS.dgn
ddavenport

STD. NO. EB_30_90S

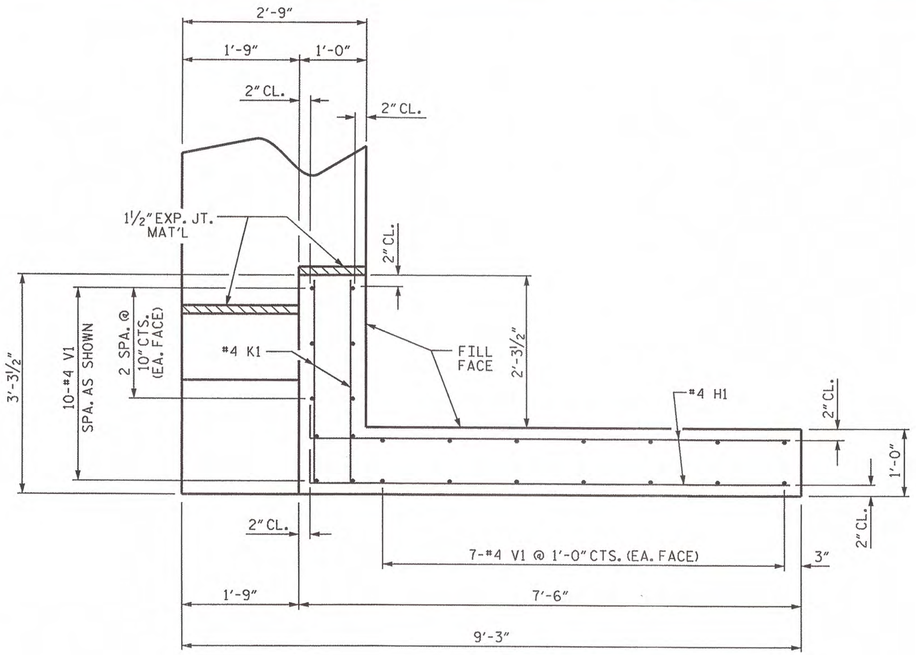


PLAN OF WING (W1)

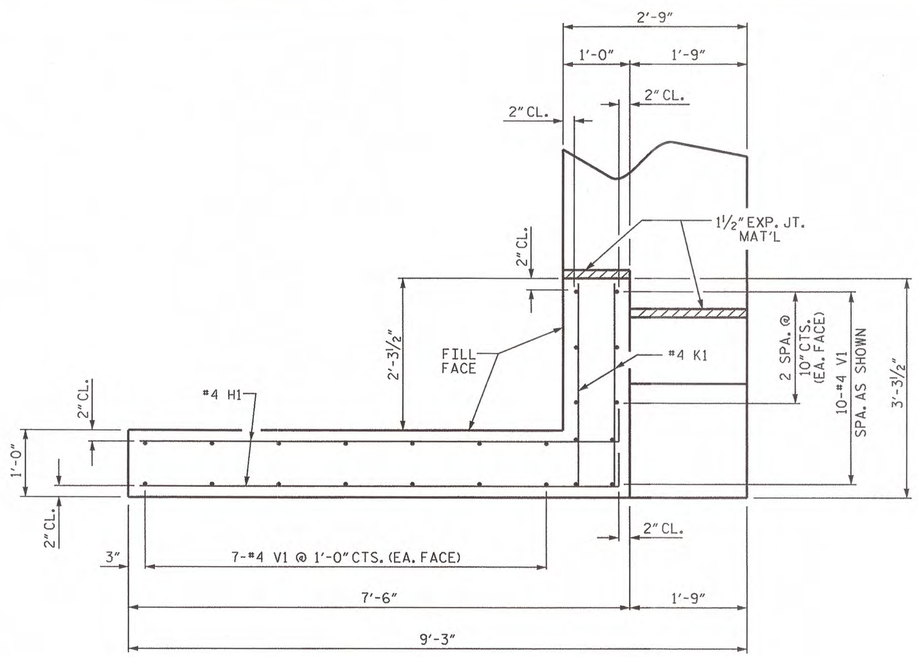


PLAN OF WING (W2)

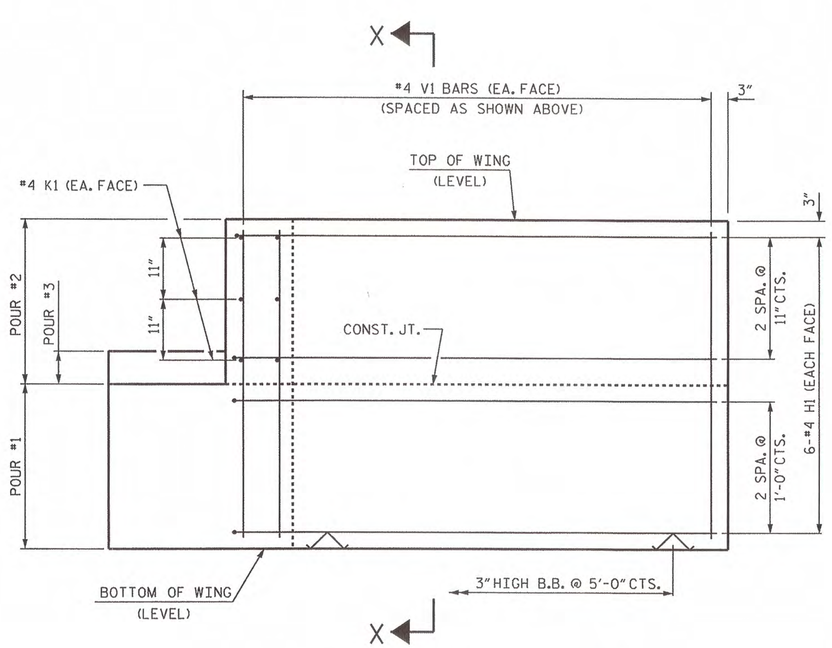


ELEVATION OF WING (W1)

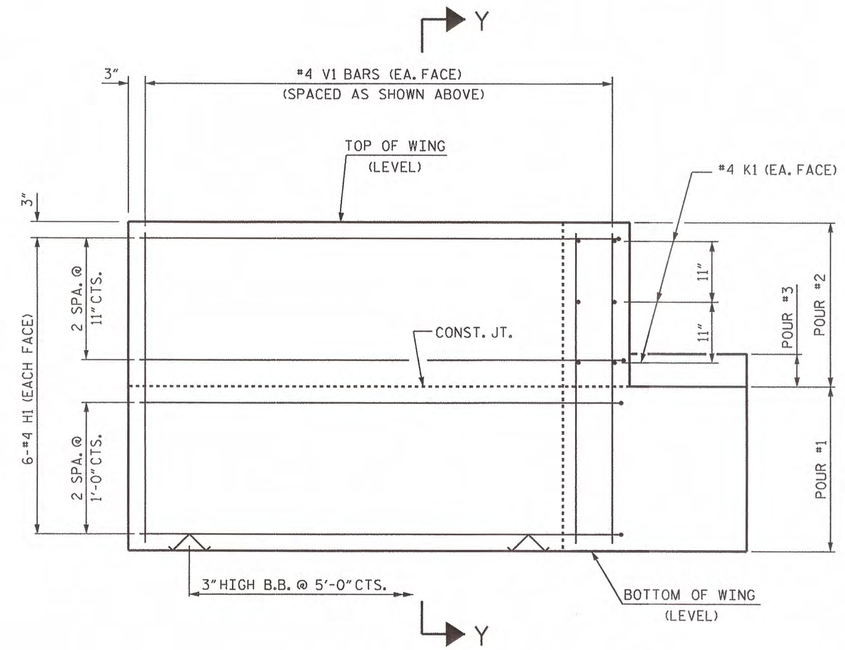


ELEVATION OF WING (W2)

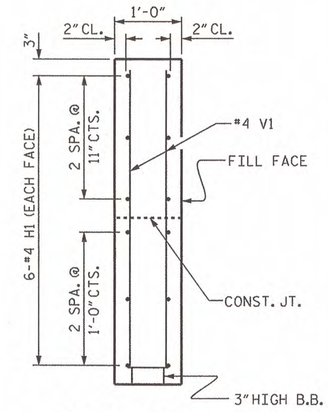


SECTION X-X

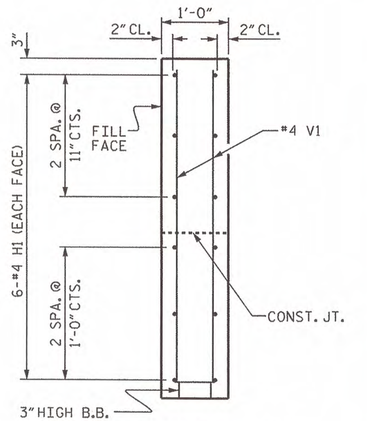


SECTION Y-Y

PROJECT NO. BD-5109I

DAVIDSON COUNTY

STATION: 13+55.00 -L-

SHEET 3 OF 4

STATE OF NORTH CAROLINA
DEPARTMENT OF TRANSPORTATION
RALEIGH

SUBSTRUCTURE

END BENT
WING DETAILS

| REVISIONS | | | | | | SHEET NO. |
|---|---|---|---|---|---|---|
| NO. | BY: | DATE: | NO. | BY: | DATE: | S-10 |
| 1 | | | 3 | | | TOTAL SHEETS |
| 2 | | | 4 | | | 12 |

NORTH CAROLINA PROFESSIONAL SEAL 10730 ENGINEER D. ANDREW DAVENPORT, JR.
3-20-12

ASSEMBLED BY : D.A. DAVENPORT DATE :03/15/12
CHECKED BY : M.H. ALI DATE :03/19/12

DRAWN BY : DGE 02/10
CHECKED BY : MKT 02/10

20-MAR-2012 07:06
R:\Structures\PLANS\BD5109I_SD_CS.dgn
ddavenport

WING DETAILS

STD. NO. EB_30_90S

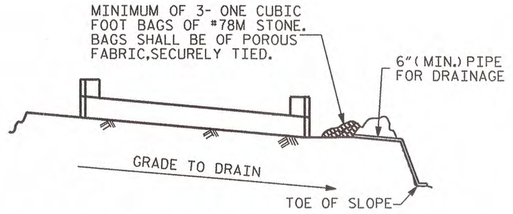


BAGGED STONE AND PIPE SHALL BE PLACED IMMEDIATELY AFTER COMPLETION OF END BENT EXCAVATION. PIPE MAY BE EITHER CONCRETE, CORRUGATED STEEL, CORRUGATED ALUMINUM ALLOY, OR CORRUGATED PLASTIC. PERFORATED PIPE WILL NOT BE ALLOWED.

BAGGED STONE SHALL REMAIN IN PLACE UNTIL THE ENGINEER DIRECTS THAT IT BE REMOVED. THE CONTRACTOR SHALL REMOVE AND DISPOSE OF SILT ACCUMULATIONS AT BAGGED STONE WHEN SO DIRECTED BY THE ENGINEER. BAGS SHALL BE REMOVED AND REPLACED WHENEVER THE ENGINEER DETERMINES THAT THEY HAVE DETERIORATED AND LOST THEIR EFFECTIVENESS.

NO SEPARATE PAYMENT WILL BE MADE FOR THIS WORK AND THE ENTIRE COST OF THIS WORK SHALL BE INCLUDED IN THE UNIT CONTRACT PRICE BID FOR THE SEVERAL PAY ITEMS.

## TEMPORARY DRAINAGE AT END BENT

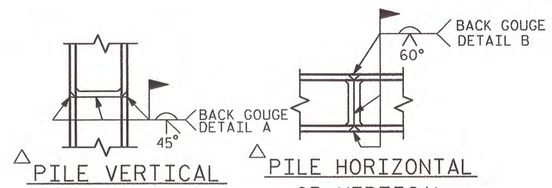


△ POSITION OF PILE DURING WELDING.

## PILE SPLICE DETAILS

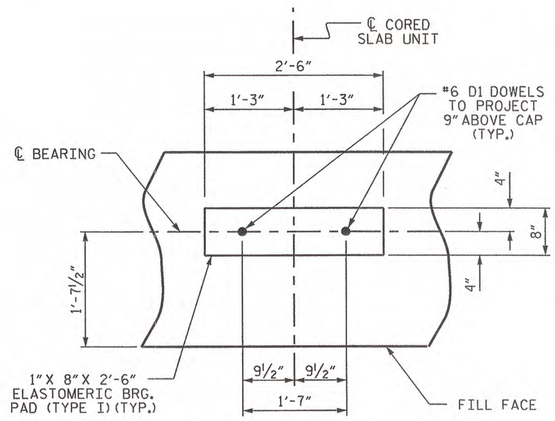


## DETAIL "A"

(END BENT No. 1 SHOWN, END BENT No. 2 SIMILAR BY ROTATION)

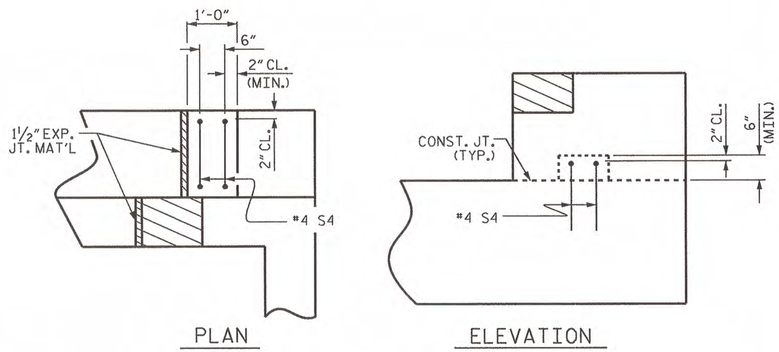


## LATERAL GUIDE DETAILS

(RIGHT LATERAL GUIDE SHOWN, LEFT END SIMILAR)

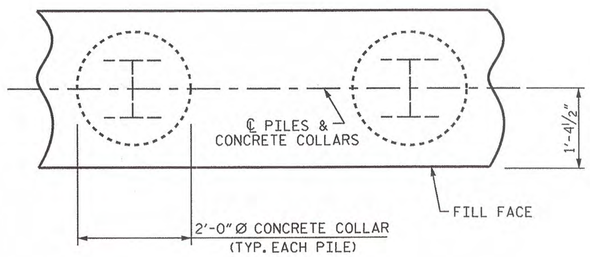


PLAN

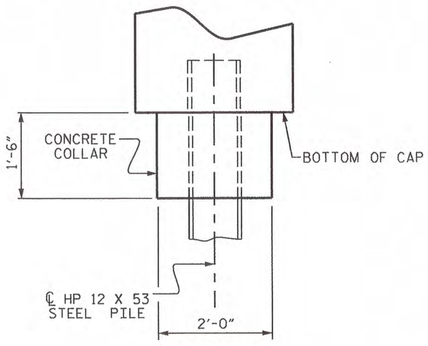


ELEVATION

## CORROSION PROTECTION FOR STEEL PILES DETAIL

(END BENT No. 1 SHOWN, END BENT No. 2 SIMILAR BY ROTATION)

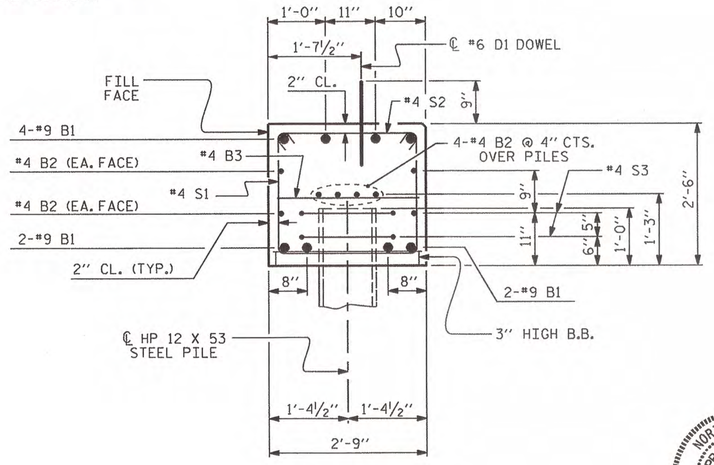


## SECTION A-A

(CONCRETE COLLAR NOT SHOWN FOR CLARITY. SEE "CORROSION PROTECTION FOR STEEL PILES DETAIL.")

## BAR TYPES

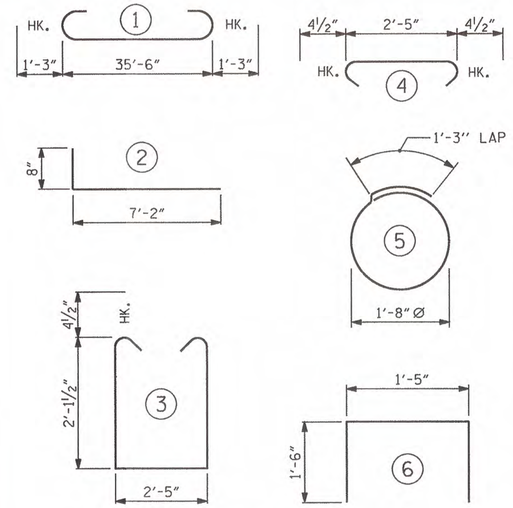


ALL BAR DIMENSIONS ARE OUT TO OUT.

| END BENT No. 1 | END BENT No. 2 |
|---|---|
| HP 12 X 53 STEEL PILES | HP 12 X 53 STEEL PILES |
| NO: 5 LIN. FT.= 100 | NO: 5 LIN. FT.= 75 |
| STEEL PILE POINTS EA.= 5 | STEEL PILE POINTS EA.= 5 |

## BILL OF MATERIAL FOR ONE END BENT

| BAR | NO. | SIZE | TYPE | LENGTH | WEIGHT |
|---|---|---|---|---|---|
| B1 | 8 | #9 | 1 | 38'-0" | 1034 |
| B2 | 16 | #4 | STR | 19'-1" | 204 |
| B3 | 9 | #4 | STR | 2'-5" | 15 |
| D1 | 20 | #6 | STR | 1'-6" | 45 |
| H1 | 24 | #4 | 2 | 7'-10" | 126 |
| K1 | 12 | #4 | STR | 2'-11" | 23 |
| S1 | 46 | #4 | 3 | 7'-5" | 228 |
| S2 | 46 | #4 | 4 | 3'-2" | 97 |
| S3 | 10 | #4 | 5 | 6'-6" | 43 |
| S4 | 4 | #4 | 6 | 4'-5" | 12 |
| V1 | 48 | #4 | STR | 4'-8" | 150 |

REINFORCING STEEL (FOR ONE END BENT) 1977 LBS.

CLASS A CONCRETE BREAKDOWN (FOR ONE END BENT)

| | | |
|---|---|---|
| POUR #1 | CAP, LOWER PART OF WINGS & COLLARS | 11.2 C.Y. |
| POUR #2 | UPPER PART OF WINGS | 2.0 C.Y. |
| POUR #3 | LATERAL GUIDES | 0.1 C.Y. |
| TOTAL CLASS A CONCRETE | | 13.3 C.Y. |

PROJECT NO. BD-5109I

DAVIDSON COUNTY

STATION: 13+55.00 -L-

SHEET 4 OF 4

STATE OF NORTH CAROLINA
DEPARTMENT OF TRANSPORTATION
RALEIGH

SUBSTRUCTURE

# END BENT No. 1 & 2 DETAILS

| REVISIONS | | | | | | SHEET NO. |
|---|---|---|---|---|---|---|
| NO. | BY: | DATE: | NO. | BY: | DATE: | S-11 |
| 1 | | | 3 | | | TOTAL SHEETS |
| 2 | | | 4 | | | 12 |

NORTH CAROLINA PROFESSIONAL SEAL 10730 ENGINEER D. ANDREW DAVENPORT, JR. 3-27-12

| | |
|---|---|
| ASSEMBLED BY: D. A. DAVENPORT | DATE: 03/15/12 |
| CHECKED BY: M.H. ALI | DATE: 03/19/12 |
| DRAWN BY: DGE 02/10 | |
| CHECKED BY: MKT 02/10 | |

27-MAR-2012 09:57
R:\Structures\PLANS\BD5109I_SD_CS.dgn
ddavenport

STD. NO. EB_30_90S

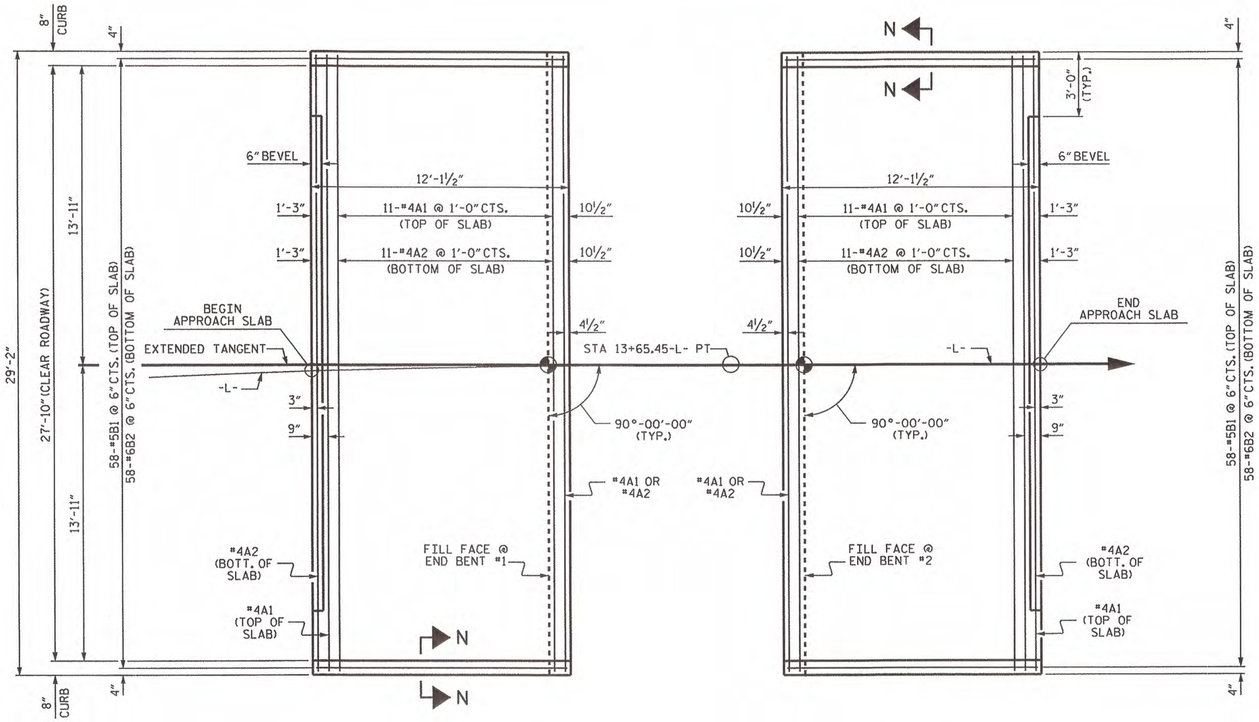


PLAN @ END BENT #1 PLAN @ END BENT #2

DIMENSIONS SHOWN ARE TYPICAL FOR BOTH APPROACH SLABS

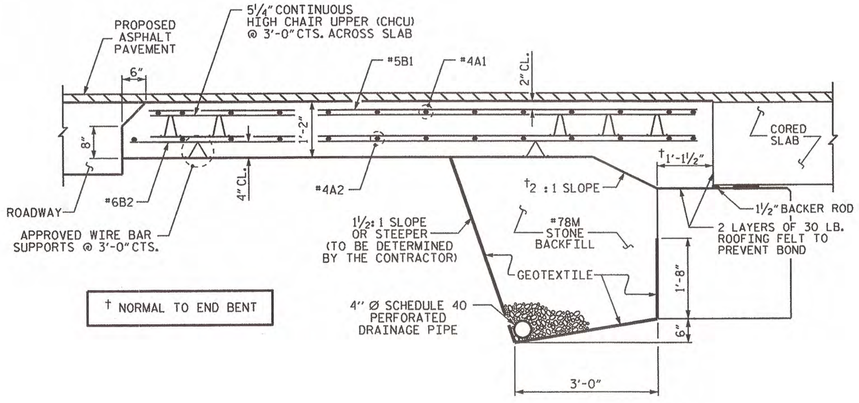


SECTION THRU SLAB

## NOTES

FOR BRIDGE APPROACH FILL INCLUDING GEOTEXTILE, 4" Ø DRAINAGE PIPE, AND #78M STONE BACKFILL, SEE ROADWAY PLANS.

GEOTEXTILE SHALL BE TYPE 1 IN ACCORDANCE WITH THE STANDARD SPECIFICATIONS SECTION 1056.

#78M STONE BACKFILL (CLASS V SELECT MATERIAL) SHALL BE IN ACCORDANCE WITH STANDARD SPECIFICATIONS SECTION 1016.

#78M STONE BACKFILL IS TO BE CONTINUOUS ALONG FILL FACE OF BACKWALL FROM OUTSIDE EDGE TO OUTSIDE EDGE OF APPROACH SLAB.

FOR THE 4" Ø DRAINAGE PIPE OUTLET(S), SEE ROADWAY STANDARD DRAWINGS.

AREA BETWEEN THE WINGWALL AND APPROACH SLAB SHALL BE GRADED TO DRAIN THE WATER AWAY FROM THE FILL FACE OF THE BRIDGE AND SHALL BE PAVED. SEE ROADWAY PLANS.

APPROACH SLAB GROOVING IS NOT REQUIRED.

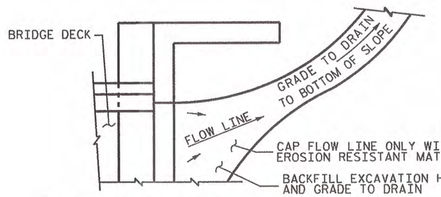


NOTE: IF THE APPROACH SLAB IS NOT CONSTRUCTED IMMEDIATELY AFTER THE BACKFILLING OF THE END BENT EXCAVATION, GRADE TO DRAIN TO THE BOTTOM OF THE SLOPE AND PROVIDE EROSION RESISTANT MATERIAL, SUCH AS FIBERGLASS ROVING OR AS DIRECTED BY THE ENGINEER TO PREVENT SOIL EROSION AND TO PROTECT THE AREA ADJACENT TO THE STRUCTURE. THE CONTRACTOR WILL BE REQUIRED TO REMOVE THESE MATERIALS PRIOR TO CONSTRUCTION OF THE APPROACH SLAB.

## TEMPORARY DRAINAGE DETAIL

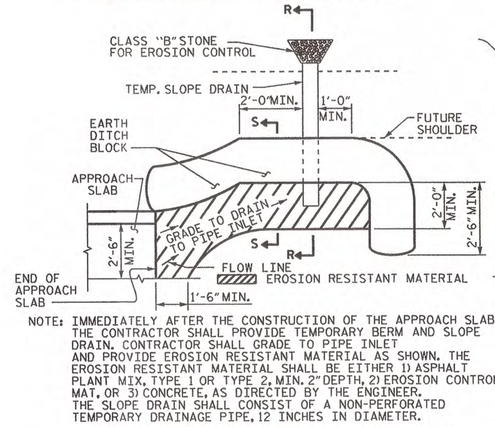


NOTE: IMMEDIATELY AFTER THE CONSTRUCTION OF THE APPROACH SLAB, THE CONTRACTOR SHALL PROVIDE TEMPORARY BERM AND SLOPE DRAIN. CONTRACTOR SHALL GRADE TO PIPE INLET AND PROVIDE EROSION RESISTANT MATERIAL AS SHOWN. THE EROSION RESISTANT MATERIAL SHALL BE EITHER 1) ASPHALT PLANT MIX, TYPE 1 OR TYPE 2, MIN. 2" DEPTH, 2) EROSION CONTROL MAT, OR 3) CONCRETE, AS DIRECTED BY THE ENGINEER. THE SLOPE DRAIN SHALL CONSIST OF A NON-PERFORATED TEMPORARY DRAINAGE PIPE, 12 INCHES IN DIAMETER.

PLAN VIEW

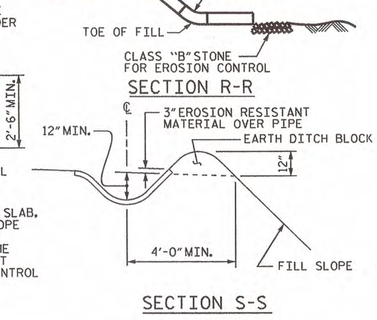


SECTION R-R




SECTION S-S

## TEMPORARY BERM AND SLOPE DRAIN DETAILS

(TO BE USED WHEN SHOULDER BERM GUTTER IS REQUIRED)

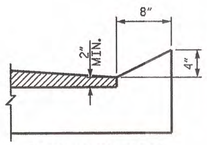


SECTION N-N

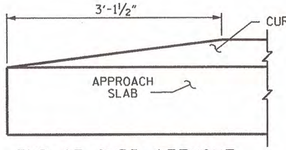


END OF CURB WITHOUT SHOULDER BERM GUTTER

## CURB DETAILS

| SPLICE LENGTHS | | |
|---|---|---|
| BAR SIZE | EPOXY COATED | UNCOATED |
| #4 | 2'-0" | 1'-9" |
| #5 | 2'-6" | 2'-2" |
| #6 | 3'-10" | 2'-7" |

BILL OF MATERIAL

APPROACH SLAB AT EB #1

| BAR | NO. | SIZE | TYPE | LENGTH | WEIGHT |
|---|---|---|---|---|---|
| * A1 | 13 | #4 | STR | 28'-10" | 250 |
| A2 | 13 | #4 | STR | 28'-10" | 250 |
| * B1 | 58 | #5 | STR | 11'-2" | 676 |
| B2 | 58 | #6 | STR | 11'-8" | 1016 |
| REINFORCING STEEL | | | | LBS. | 1266 |
| * EPOXY COATED REINFORCING STEEL | | | | LBS. | 926 |
| CLASS AA CONCRETE | | | | C.Y. | 18.1 |

APPROACH SLAB AT EB #2

| BAR | NO. | SIZE | TYPE | LENGTH | WEIGHT |
|---|---|---|---|---|---|
| * A1 | 13 | #4 | STR | 28'-10" | 250 |
| A2 | 13 | #4 | STR | 28'-10" | 250 |
| * B1 | 58 | #5 | STR | 11'-2" | 676 |
| B2 | 58 | #6 | STR | 11'-8" | 1016 |
| REINFORCING STEEL | | | | LBS. | 1266 |
| * EPOXY COATED REINFORCING STEEL | | | | LBS. | 926 |
| CLASS AA CONCRETE | | | | C.Y. | 18.1 |

PROJECT NO. BD-5109I

DAVIDSON COUNTY

STATION: 13+55.00 -L-

STATE OF NORTH CAROLINA
DEPARTMENT OF TRANSPORTATION
RALEIGH

# STANDARD BRIDGE APPROACH SLAB FOR PRESTRESSED CORED SLAB UNIT (SUB-REGIONAL TIER) 90° SKEW

| REVISIONS | | | | | | SHEET NO. |
|---|---|---|---|---|---|---|
| NO. | BY: | DATE: | NO. | BY: | DATE: | S-12 |
| 1 | | | 3 | | | TOTAL SHEETS |
| 2 | | | 4 | | | 12 |

ASSEMBLED BY : D.A. DAVENPORT DATE : 03/15/12
CHECKED BY : M.H. ALI DATE : 03/19/12
DRAWN BY : SHS/MAA 5-09
CHECKED BY : BCH 5-09
REV. 12-11 MAA/AAC

27-MAR-2012 09:56
R:\Structures\PLANS\BD5109I_SD_CS.dgn
ddavenport

STD. NO. BAS_30_90S

# STANDARD NOTES

## DESIGN DATA:

| | |
|---|---|
| SPECIFICATIONS | A.A.S.H.T.O. (CURRENT) |
| LIVE LOAD | SEE PLANS |
| IMPACT ALLOWANCE | SEE A.A.S.H.T.O. |
| STRESS IN EXTREME FIBER OF | |
| STRUCTURAL STEEL - AASHTO M270 GRADE 36 | 20,000 LBS. PER SQ. IN. |
| - AASHTO M270 GRADE 50W | 27,000 LBS. PER SQ. IN. |
| - AASHTO M270 GRADE 50 | 27,000 LBS. PER SQ. IN. |
| REINFORCING STEEL IN TENSION | |
| GRADE 60 | 24,000 LBS. PER SQ. IN. |
| CONCRETE IN COMPRESSION | 1,200 LBS. PER SQ. IN. |
| CONCRETE IN SHEAR | SEE A.A.S.H.T.O. |
| STRUCTURAL TIMBER - TREATED OR | |
| UNTREATED - EXTREME FIBER STRESS | 1,800 LBS. PER SQ. IN. |
| COMPRESSION PERPENDICULAR TO GRAIN OF TIMBER | 375 LBS. PER SQ. IN. |
| EQUIVALENT FLUID PRESSURE OF EARTH | 30 LBS. PER CU. FT. (MINIMUM) |

## MATERIAL AND WORKMANSHIP:

EXCEPT AS MAY OTHERWISE BE SPECIFIED ON PLANS OR IN THE SPECIAL PROVISIONS, ALL MATERIAL AND WORKMANSHIP SHALL BE IN ACCORDANCE WITH THE 2012 "STANDARD SPECIFICATIONS FOR ROADS AND STRUCTURES" OF THE N. C. DEPARTMENT OF TRANSPORTATION.

STEEL SHEET PILING FOR PERMANENT OR TEMPORARY APPLICATIONS SHALL BE HOT ROLLED.

## CONCRETE:

UNLESS OTHERWISE REQUIRED ON PLANS, CLASS A CONCRETE SHALL BE USED FOR ALL PORTIONS OF ALL STRUCTURES WITH THE EXCEPTION THAT: CLASS AA CONCRETE SHALL BE USED IN BRIDGE SUPERSTRUCTURES, ABUTMENT BACKWALLS, AND APPROACH SLABS; AND CLASS B CONCRETE SHALL BE USED FOR SLOPE PROTECTION AND RIP RAP.

## CONCRETE CHAMFERS:

UNLESS OTHERWISE NOTED ON THE PLANS, ALL EXPOSED CORNERS ON STRUCTURES SHALL BE CHAMFERED 3/4" WITH THE FOLLOWING EXCEPTIONS: TOP CORNERS OF CURBS MAY BE ROUNDED TO 1-1/2" RADIUS WHICH IS BUILT INTO CURB FORMS; CORNERS OF TRANSVERSE FLOOR EXPANSION JOINTS SHALL BE ROUNDED WITH A 1/4" FINISHING TOOL UNLESS OTHERWISE REQUIRED ON PLANS; AND CORNERS OF EXPANSION JOINTS IN THE ROADWAY FACES AND TOPS OF CURBS AND SIDEWALKS SHALL BE ROUNDED TO A 1/4" RADIUS WITH A FINISHING STONE OR TOOL UNLESS OTHERWISE REQUIRED ON PLANS.

## DOWELS:

DOWELS WHEN INDICATED ON PLANS AS FOR CULVERT EXTENSIONS, SHALL BE EMBEDDED AT LEAST 12" INTO THE OLD CONCRETE AND GROUTED INTO PLACE WITH 1:2 CEMENT MORTAR.

## ALLOWANCE FOR DEAD LOAD DEFLECTION, SETTLEMENT, ETC. IN CASTING SUPERSTRUCTURES:

BRIDGES SHALL BE BUILT ON THE GRADE OR VERTICAL CURVE SHOWN ON PLANS. SLABS, CURBS AND PARAPETS SHALL CONFORM TO THE GRADE OR CURVE.

ALL DIMENSIONS WHICH ARE GIVEN IN SECTION AND ARE AFFECTED BY DEAD LOAD DEFLECTIONS ARE DIMENSIONS AT CENTER LINE OF BEARING UNLESS OTHERWISE NOTED ON PLANS. IN SETTING FORMS FOR STEEL BEAM BRIDGES AND PRESTRESSED CONCRETE GIRDER BRIDGES, ADJUSTMENTS SHALL BE MADE DUE TO THE DEAD LOAD DEFLECTIONS FOR THE ELEVATIONS SHOWN. WHERE BLOCKS ARE SHOWN OVER BEAMS FOR BUILDING UP TO THE SLAB, THE VERTICAL DIMENSIONS OF THE BLOCKS SHALL BE ADJUSTED BETWEEN BEARINGS TO COMPENSATE FOR DEAD LOAD DEFLECTIONS, VERTICAL CURVE ORDINATE, AND ACTUAL BEAM CAMBER. WHERE BOTTOM OF SLAB IS IN LINE WITH BOTTOM OF TOP FLANGES, DEPTH OF SLAB BETWEEN BEARINGS SHALL BE ADJUSTED TO COMPENSATE FOR DEAD LOAD DEFLECTION, VERTICAL CURVE ORDINATE, AND ACTUAL BEAM CAMBER.

IN SETTING FALSEWORK AND FORMS FOR REINFORCED CONCRETE SPANS, AN ALLOWANCE SHALL BE MADE FOR DEAD LOAD DEFLECTIONS, SETTLEMENT OF FALSEWORK, AND PERMANENT CAMBER WHICH SHALL BE PROVIDED FOR IN ADDITION TO THE ELEVATIONS SHOWN. AFTER REMOVAL OF THE FALSEWORK, THE FINISHED STRUCTURES SHALL CONFORM TO THE PROFILE AND ELEVATIONS SHOWN ON THE PLANS AND CONSTRUCTION ELEVATIONS FURNISHED BY THE ENGINEER.

DETAILED DRAWINGS FOR FALSEWORK OR FORMS FOR BRIDGE SUPERSTRUCTURE AND ANY STRUCTURE OR PARTS OF A STRUCTURE AS NOTED ON THE PLANS SHALL BE SUBMITTED TO THE ENGINEER FOR APPROVAL BEFORE CONSTRUCTION OF THE FALSEWORK OR FORMS IS STARTED.

## REINFORCING STEEL:

ALL REINFORCING STEEL SHALL BE DEFORMED. DIMENSIONS RELATIVE TO PLACEMENT OF REINFORCING ARE TO CENTERS OF BARS UNLESS OTHERWISE INDICATED IN THE PLANS. DIMENSIONS ON BAR DETAILS ARE TO CENTERS OF BARS OR ARE OUT TO OUT AS INDICATED ON PLANS.

WIRE BAR SUPPORTS SHALL BE PROVIDED FOR REINFORCING STEEL WHERE INDICATED ON THE PLANS. WHEN BAR SUPPORT PIECES ARE PLACED IN CONTINUOUS LINES, THEY SHALL BE SO PLACED THAT THE ENDS OF THE SUPPORTING WIRES SHALL BE LAPPED TO LOCK LEGS ON ADJOINING PIECES.

## STRUCTURAL STEEL:

AT THE CONTRACTOR'S OPTION, HE MAY SUBSTITUTE 7/8" Ø SHEAR STUDS FOR THE 3/4" Ø STUDS SPECIFIED ON THE PLANS. THIS SUBSTITUTION SHALL BE MADE AT THE RATE OF 3 - 7/8" Ø STUDS FOR 4 - 3/4" Ø STUDS, AND STUD SPACING CHANGES SHALL BE MADE AS NECESSARY TO PROVIDE THE SAME EQUIVALENT NUMBER OF 7/8" Ø STUDS ALONG THE BEAM AS SHOWN FOR 3/4" Ø STUDS BASED ON THE RATIO OF 3 - 7/8" Ø STUDS FOR 4 - 3/4" Ø STUDS. STUDS OF THE LENGTH SPECIFIED ON THE PLANS MUST BE PROVIDED. THE MAXIMUM SPACING SHALL BE 2'-0".

EXCEPT AT THE INTERIOR SUPPORTS OF CONTINUOUS BEAMS WHERE THE COVER PLATE IS IN CONTACT WITH BEARING PLATE, THE CONTRACTOR MAY, AT HIS OPTION, SUBSTITUTE FOR THE COVER PLATES DESIGNATED ON THE PLANS COVER PLATES OF THE EQUIVALENT AREA PROVIDED THESE PLATES ARE AT LEAST 5/16" IN THICKNESS AND DO NOT EXCEED A WIDTH EQUAL TO THE FLANGE WIDTH LESS 2" OR A THICKNESS EQUAL TO 2 TIMES THE FLANGE THICKNESS. THE SIZE OF FILLET WELDS SHALL CONFORM TO THE REQUIREMENTS OF THE CURRENT ANSI/AASHTO/AWS "BRIDGE WELDING CODE". ELECTROSLAG WELDING WILL NOT BE PERMITTED.

WITH THE SOLE EXCEPTION OF EDGES AT SURFACES WHICH BEAR ON OTHER SURFACES, ALL SHARP EDGES AND ENDS OF SHAPES AND PLATES SHALL BE SLIGHTLY ROUNDED BY SUITABLE MEANS TO A RADIUS OF APPROXIMATELY 1/16 INCH OR EQUIVALENT FLAT SURFACE AT A SUITABLE ANGLE PRIOR TO PAINTING, GALVANIZING, OR METALLIZING.

## HANDRAILS AND POSTS:

METAL STANDARDS AND FACES OF THE CONCRETE END POSTS FOR THE METAL RAIL SHALL BE SET NORMAL TO THE GRADE OF THE CURB, UNLESS OTHERWISE SHOWN ON PLANS. THE METAL RAIL AND TOPS OF CONCRETE POSTS USED WITH THE ALUMINUM RAIL SHALL BE BUILT PARALLEL TO THE GRADE OF THE CURB.

METAL HANDRAILS SHALL BE IN ACCORDANCE WITH THE PLANS. RAILS SHALL BE AS MANUFACTURED FOR BRIDGE RAILING. CASTINGS SHALL BE OF A UNIFORM APPEARANCE. FINS AND OTHER DEFORMATIONS RESULTING FROM CASTING OR OTHERWISE SHALL BE REMOVED IN A MANNER SO THAT A UNIFORM COLORING OF THE COMPLETED CASTING SHALL BE OBTAINED. CASTINGS WITH DISCOLORATIONS OR OF NON-UNIFORM COLORING WILL NOT BE ACCEPTED. CERTIFIED MILL REPORTS ARE REQUIRED FOR METAL RAILS AND POSTS.

## SPECIAL NOTES:

GENERALLY, IN CASE OF DISCREPANCY, THIS STANDARD SHEET OF NOTES SHALL GOVERN OVER THE SPECIFICATIONS, BUT THE REMAINDER OF THE PLANS SHALL GOVERN OVER NOTES HEREON, AND SPECIAL PROVISIONS SHALL GOVERN OVER ALL. SEE SPECIFICATIONS ARTICLE 105-4.

ENGLISH

JANUARY, 1990

STD. NO. SN

REV. 6-16-95 EEM (c) RGW REV. 5-7-03 RWW (c) JTE REV. 10-1-11 MAA (c) GM
REV. 8-16-99 RWW (c) LES REV. 5-1-06 TLA (c) GM

20-MAR-2012 07:07
R:\Structures\PLANS\BD5109I_SD_CS.dgn
adavenport