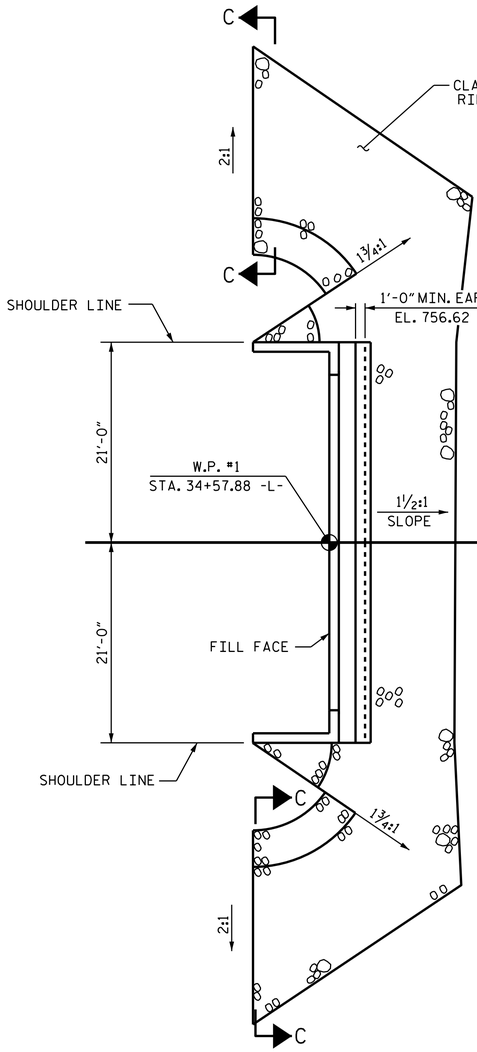

END BENT 1

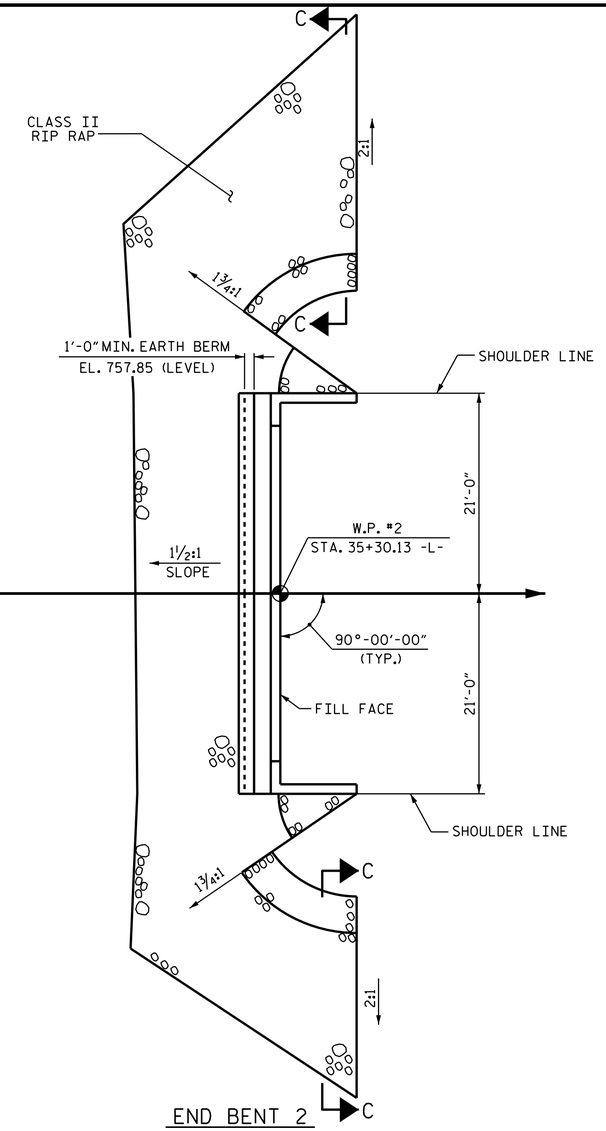

END BENT 2

PLAN

ESTIMATED QUANTITIES		
BRIDGE @ STA. 34+94.00 -L-	RIP RAP CLASS II (2'-0" THICK)	GEOTEXTILE FOR DRAINAGE
	TONS	SQUARE YARDS
END BENT 1	95	105
END BENT 2	120	135

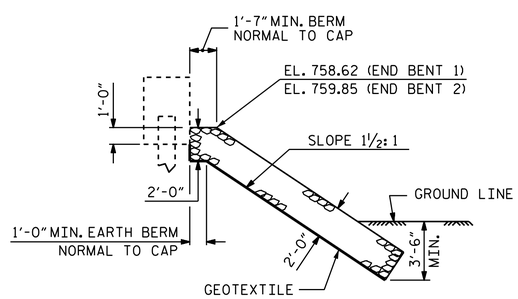

℄ SECTION

BERM RIP RAPPED

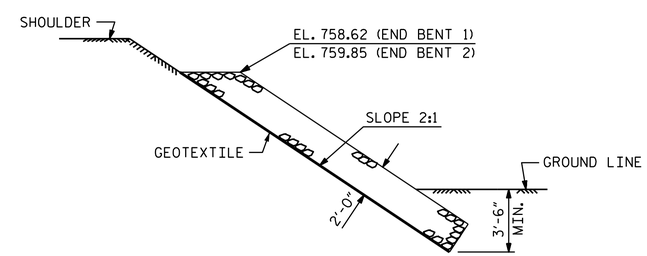

SECTION C-C

PROJECT NO. U-5540

DAVIE COUNTY

STATION: 34+94.00 -L-

STATE OF NORTH CAROLINA
DEPARTMENT OF TRANSPORTATION
RALEIGH

RIP RAP DETAILS

REVISIONS						SHEET NO.
NO.	BY:	DATE:	NO.	BY:	DATE:	S-12
1			3			TOTAL SHEETS
2			4			13

NORTH CAROLINA PROFESSIONAL SEAL 29048 ENGINEER RAMAN P. PATEL

Raman P. Patel
50D3EA046B8F40D...
9/16/2014

DRAWN BY :	R. P. PATEL	DATE :	7-9-14
CHECKED BY :	J. P. McCARTHA	DATE :	7-22-14
DESIGN ENGINEER OF RECORD:	R. P. PATEL	DATE :	8-22-14

15-SEP-2014 12:13
S:\DPG3\DivisionLets\Div09\46279.1.D1\Plans\U5540_SD_RR_01.dgn
dadavenport