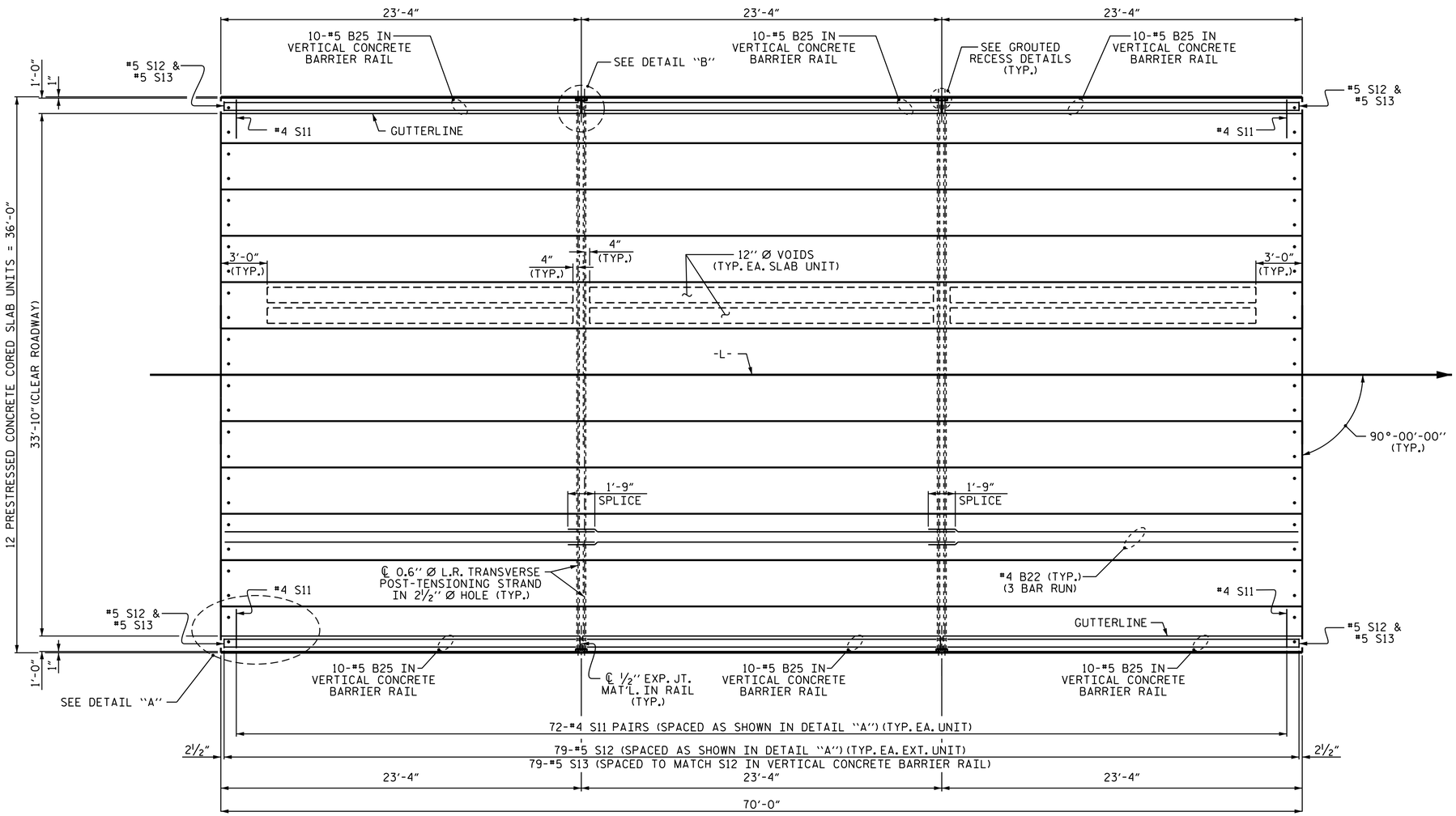

PLAN OF UNIT

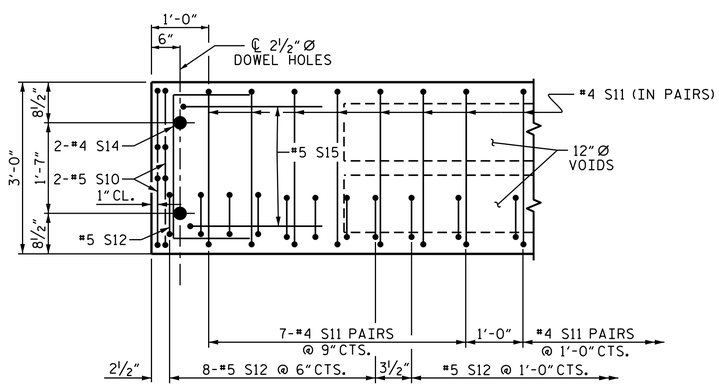

DETAIL "A"

(TYPICAL EACH END OF UNIT)
NOTE: EXTERIOR UNIT SHOWN - INTERIOR UNIT SIMILAR EXCEPT OMIT #5 S12 BARS.

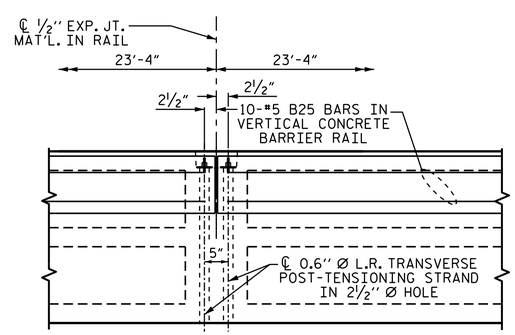

DETAIL "B"

#4 S11 BARS MAY BE SHIFTED AS NECESSARY TO MAINTAIN 1" CLEAR TO GROUTED RECESS AND 2½" Ø TRANSVERSE POST-TENSIONING STRAND HOLES.

PROJECT NO. U-5540
DAVIE COUNTY
STATION: 34+94.00 -L-

SHEET 2 OF 3

STATE OF NORTH CAROLINA
DEPARTMENT OF TRANSPORTATION
RALEIGH

PLAN OF 70' UNIT 33'-10" CLEAR ROADWAY

90° SKEW

NORTH CAROLINA PROFESSIONAL SEAL 10730 ENGINEER D. ANDRE DAVENPORT, JR.

D. André Davenport, Jr.
895DC284F664496...
9/15/2014

REVISIONS						
NO.	BY:	DATE:	NO.	BY:	DATE:	
1			3			
2			4			

SHEET NO. S-5
TOTAL SHEETS 13

ASSEMBLED BY : R. P. PATEL		DATE : 7-7-14	
CHECKED BY : J. P. McCARTHA		DATE : 7-22-14	
DRAWN BY : MAA 6/10	REV. 12/5/11	MAA/AAC	
CHECKED BY : MKT 7/10	REV. 8/14	MAA/TMG	

15-SEP-2014 12:03
S:\DPG3\DivisionLets\Div09\46279.1.D1\Plans\U5540_SD_CS_01.dgn
dadavenport

STD. NO. 24PCS_36_90S_70L