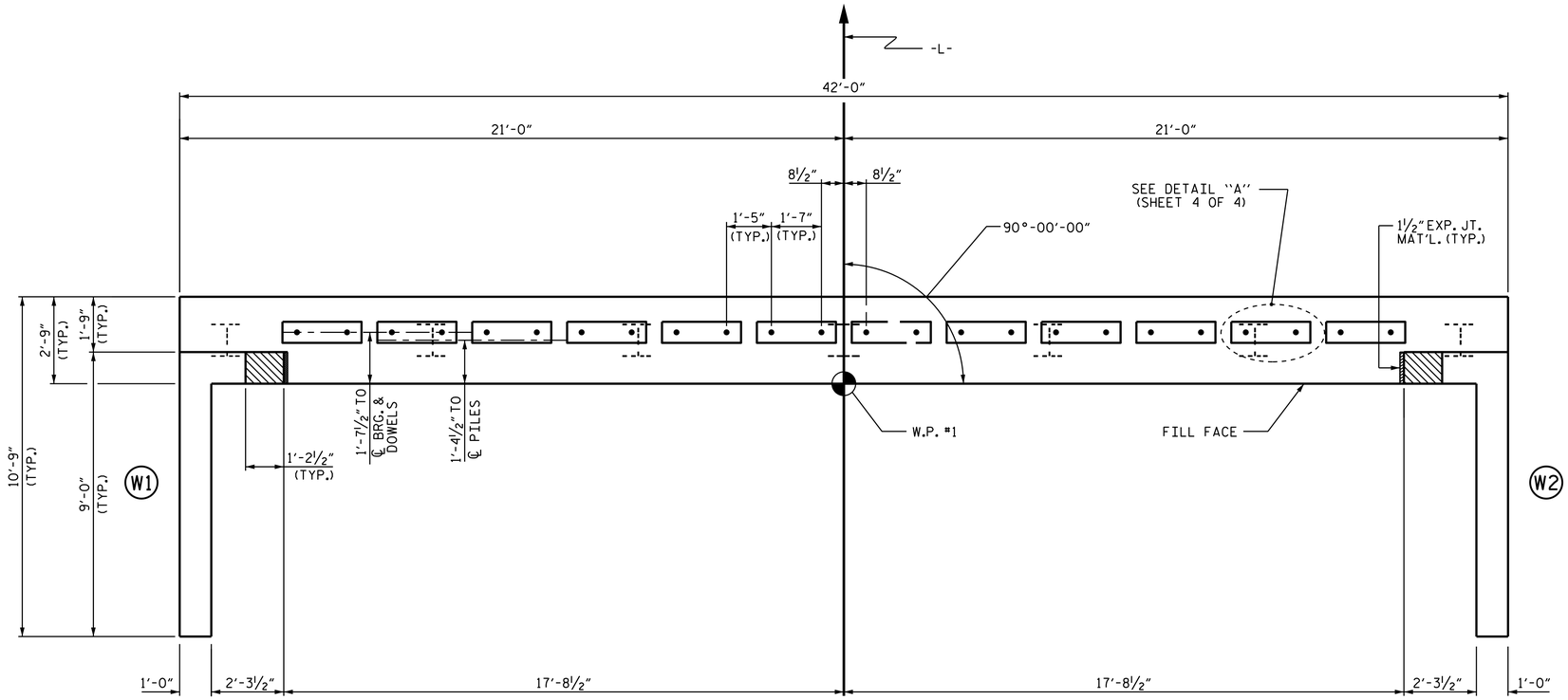

PLAN

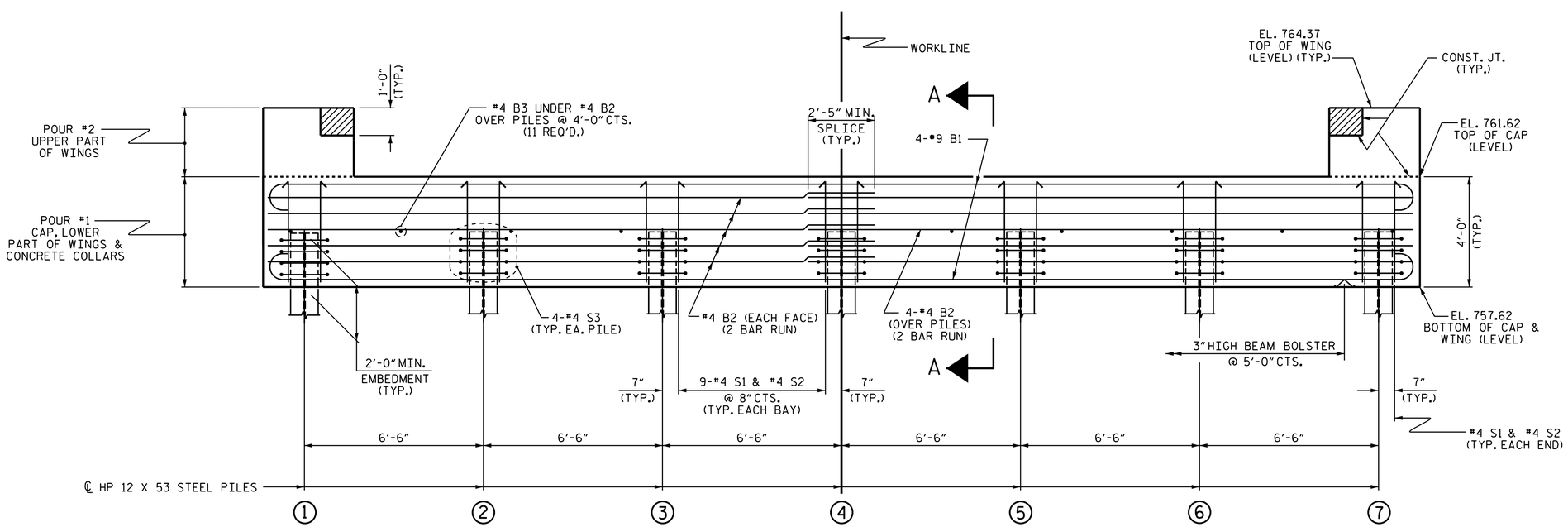

ELEVATION

WINGS NOT SHOWN FOR CLARITY.
FOR SECTION A-A, SEE SHEET 4 OF 4.
CONCRETE COLLARS FOR STEEL PILES NOT SHOWN IN PLAN AND ELEVATION VIEWS FOR CLARITY.
SEE "CORROSION PROTECTION FOR STEEL PILES DETAIL", SHEET 4 OF 4.

NOTES

STIRRUPS IN CAP MAY BE SHIFTED ASNECESSARY TO CLEAR DOWELS.

THE CONCRETE IN THE SHADED AREA OFTHE WING SHALL BE POURED AFTER THE VERTICAL CONCRETE BARRIER RAIL IS CAST IF SLIP FORMING IS USED.

FOR PILE SPLICE DETAILS, SEE SHEET 4 OF 4.

FOR WING DETAILS, SEE SHEET 3 OF 4.

PROJECT NO. U-5540
DAVIE COUNTY
STATION: 34+94.00 -L-

SHEET 1 OF 4

STATE OF NORTH CAROLINA
DEPARTMENT OF TRANSPORTATION
RALEIGH

SUBSTRUCTURE

END BENT 1

NORTH CAROLINA PROFESSIONAL SEAL 10730 ENGINEER D. ANDRE DAVENPORT, JR.

D. André Davenport, Jr.
895DC284F664495...
9/15/2014

REVISIONS						SHEET NO.
NO.	BY:	DATE:	NO.	BY:	DATE:	S-8
1			3			TOTAL SHEETS
2			4			13

ASSEMBLED BY : R. P. PATEL DATE : 7-7-14
CHECKED BY : J. P. McCARTHA DATE : 7-22-14
DRAWN BY : WJH 12/11
CHECKED BY : AAC 12/11

15-SEP-2014 12:07
S:\DPG3\DivisionLets\Div09\46279.1.D1\Plans\U5540_SD_E*_01.dgn
dadavenport

STD. NO. EB_36_90S4