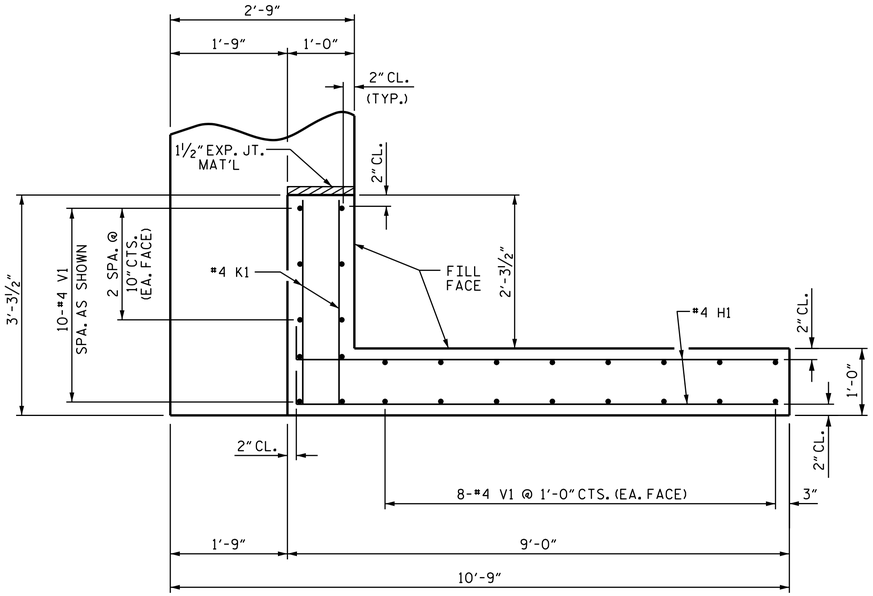

PLAN OF WING (W1)

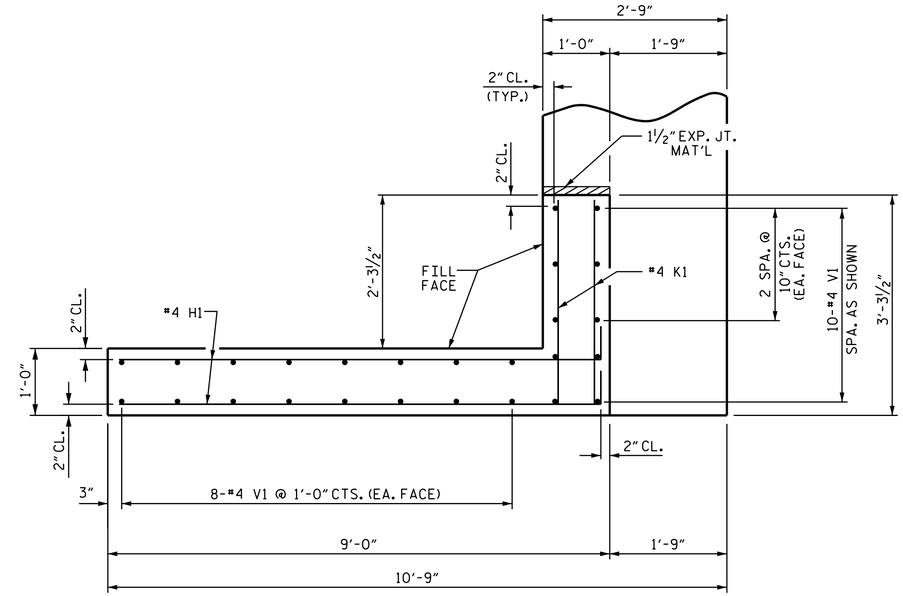

PLAN OF WING (W2)

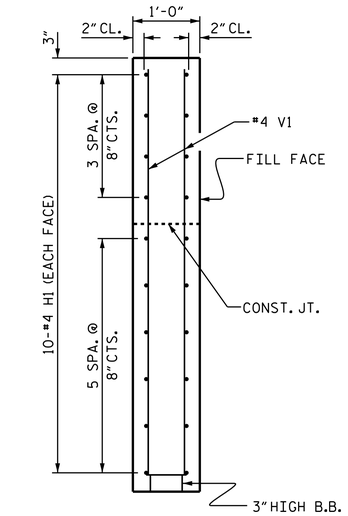

SECTION X-X

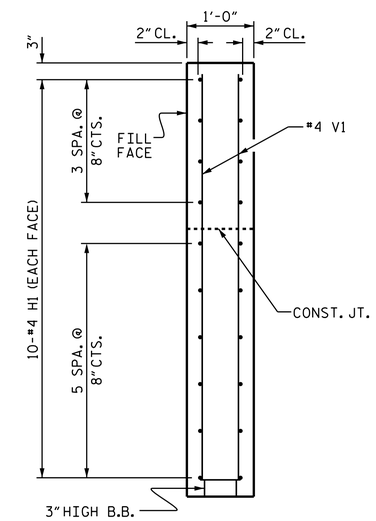

SECTION Y-Y

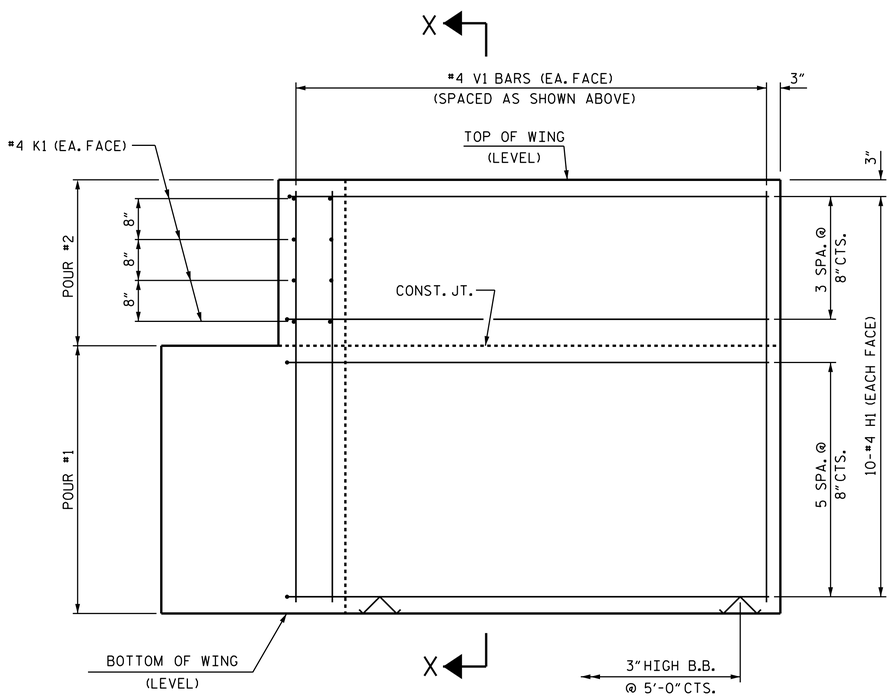

ELEVATION OF WING (W1)

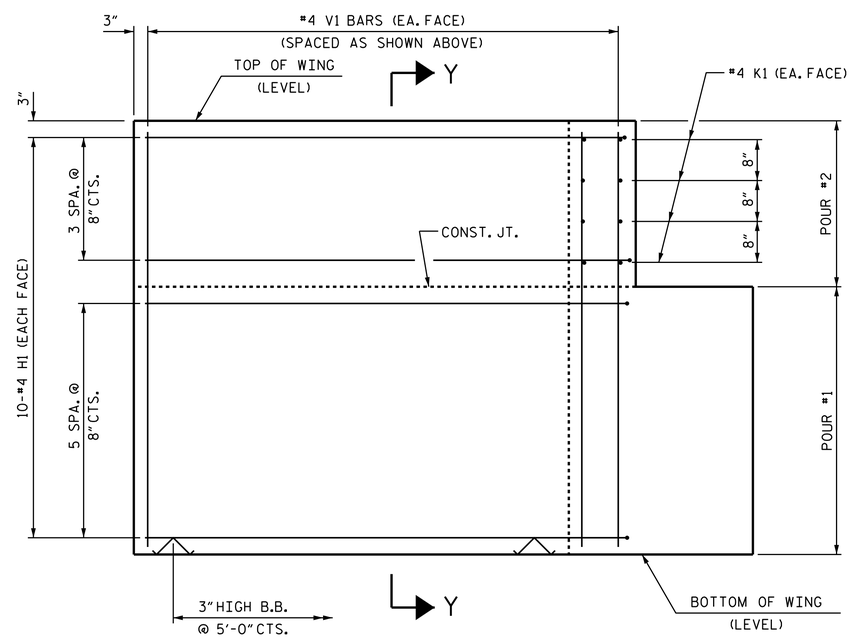

ELEVATION OF WING (W2)

WING DETAILS

PROJECT NO. U-5540

DAVIE COUNTY

STATION: 34+94.00 -L-

SHEET 3 OF 4

STATE OF NORTH CAROLINA
DEPARTMENT OF TRANSPORTATION
RALEIGH

SUBSTRUCTURE

END BENT
WING DETAILS

NORTH CAROLINA PROFESSIONAL SEAL 10730 ENGINEER D. ANDRE DAVENPORT JR.

D. André Davenport, Jr.
DocuSigned by: 856DC284F664495...
9/15/2014

REVISIONS						SHEET NO.
NO.	BY:	DATE:	NO.	BY:	DATE:	S-10
1			3			TOTAL SHEETS
2			4			13

ASSEMBLED BY : R. P. PATEL	DATE : 7-7-14
CHECKED BY : J. P. McCARTHA	DATE : 7-22-14
DRAWN BY : WJH 12/11	
CHECKED BY : AAC 12/11	

15-SEP-2014 12:10
S:\DPG3\DivisionLets\Div09\46279.1.D1\Plans\U5540_SD_E*_01.dgn
dadavenport

STD. NO. EB_36_90S4