This electronic collection of documents is provided for the convenience of the user and is Not a Certified Document –

The documents contained herein were originally issued and sealed by the individuals whose names and license numbers appear on each page, on the dates appearing with their signature on that page.
This file or an individual page shall not be considered a certified document.

09/08/99

TIP PROJECT: B-5780

CONTRACT: DI00141

See Sheet 1-A For Index of Sheets
See Sheet 1-B For Conventional Symbols

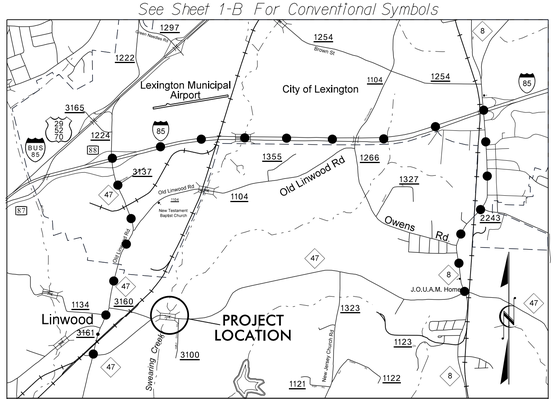

VICINITY MAP

DETOUR ROUTE

STATE OF NORTH CAROLINA
DIVISION OF HIGHWAYS

DAVIDSON COUNTY

STATE	STATE PROJECT REFERENCE NO.	SHEET NO.	TOTAL SHEETS
N.C.	B-5780	1	

STATE PROJ. NO.	F.A. PROJ. NO.	DESCRIPTION
45736.1.1	N/A	PE
45736.2.1	N/A	RW/UTILS
45736.3.1	N/A	CONST

LOCATION: ***REPLACE EXISTING BRIDGE NO. 17 OVER SWEARING CREEK ON NC 47 (JUNIOR ORDER HOME RD.)***

TYPE OF WORK: ***GRADING, DRAINAGE, PAVING, AND STRUCTURE***

4

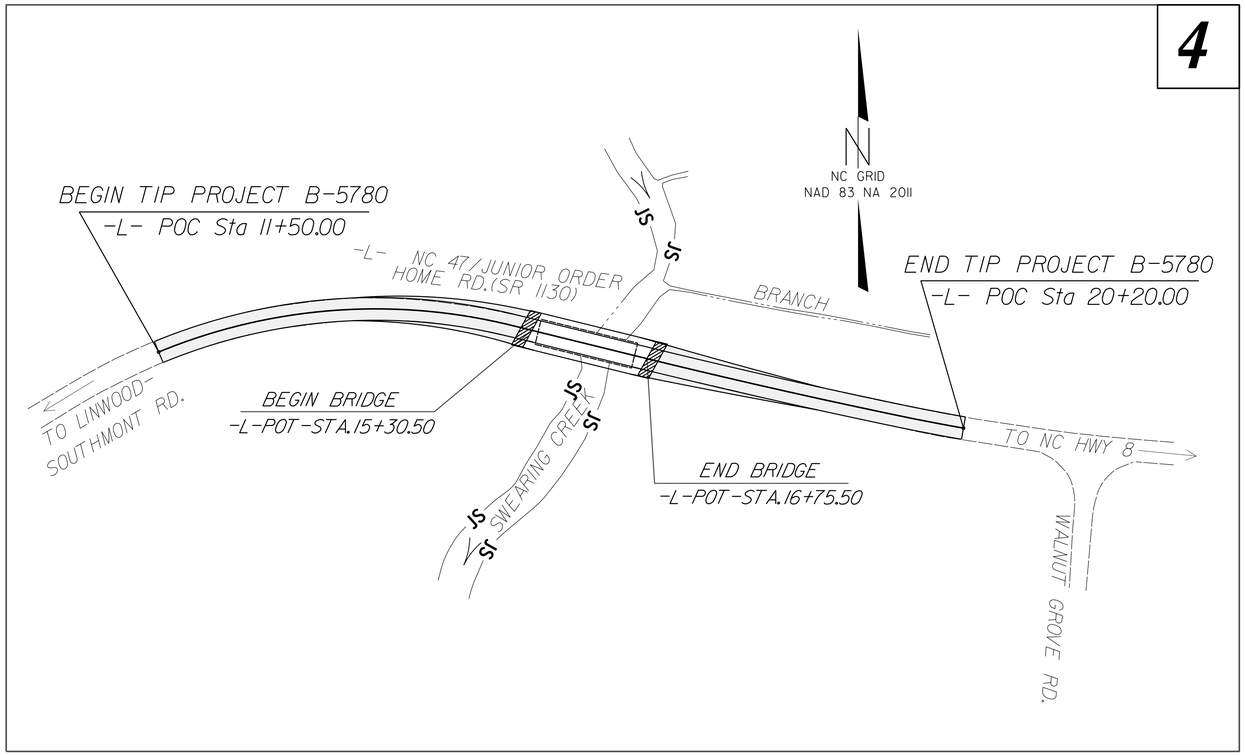

DOCUMENT NOT CONSIDERED FINAL UNLESS ALL SIGNATURES COMPLETED

GRAPHIC SCALES

50 25 0 50 100
PLANS

50 25 0 50 100
PROFILE (HORIZONTAL)

10 5 0 10 20
PROFILE (VERTICAL)

DESIGN DATA

ADT 2016 = 2600
ADT 2036 = 4200
DHV = X %
D = 50 %
T = 10 % *
V = 45 MPH**

* 4% TTST + 6% DUALS

FUNC CLASS =
MAJOR-COLLECTOR
REGIONAL TIER

**DESIGN EXCEPTION

PROJECT LENGTH

LENGTH ROADWAY TIP PROJECT B-5160 = 0.138 MILE
LENGTH STRUCTURE TIP PROJECT B-5160 = 0.027 MILE
TOTAL LENGTH TIP PROJECT B-5160 = 0.165 MILE

Prepared in the Office of:

DIVISION OF HIGHWAYS

1000 Birch Ridge Dr., Raleigh NC, 27610

2012 STANDARD SPECIFICATIONS

RIGHT OF WAY DATE:
SEPTEMBER 18, 2015

LETTING DATE:
DECEMBER 20, 2016

MATTHEW W. JONES, PE
PROJECT ENGINEER

W. AL BLANTON, PE, PLS
PROJECT DESIGN ENGINEER

HYDRAULICS ENGINEER

DocuSigned by: Craig J. Lee 10/6/2016 P.E.
SIGNATURE:

NORTH CAROLINA PROFESSIONAL SEAL 042644 ENGINEER Craig J. Lee

ROADWAY DESIGN ENGINEER

DocuSigned by: William A. Blanton 10/6/2016 P.E.
SIGNATURE:

NORTH CAROLINA PROFESSIONAL SEAL 025499 ENGINEER William A. Blanton

STATE OF NORTH CAROLINA DEPARTMENT OF TRANSPORTATION

05-OCT-2016 10:48
S:\DDC_2015-04-B5780-Jr-Order-Home Rd\B5780_ddc_tsh.dgn
$$$$USERNAME$$$$

PROJECT REFERENCE NO.	SHEET NO.
B-5780	1-A

ROADWAY DESIGN ENGINEER

NORTH CAROLINA PROFESSIONAL SEAL 025499 ENGINEER William A. Blanton

DocuSigned by: 10/4/2016

William A. Blanton

CC8037181DEC44D...

DOCUMENT NOT CONSIDERED FINAL UNLESS ALL SIGNATURES COMPLETED

INDEX OF SHEETS

SHEET NUMBER	SHEET
1	TITLE SHEET
1A	INDEX OF SHEETS, GENERAL NOTES, AND STANDARD DRAWINGS
1B	CONVENTIONAL SYMBOLS
1C-1	SURVEY CONTROL SHEETS
1D-1	CENTERLINE COORDINATE LIST
2A-1	PAVEMENT SCHEDULE AND TYPICAL SECTIONS
3B-1	ROADWAY AND DRAINAGE SUMMARIES
4	PLAN SHEET
5	PROFILE SHEET
TMP-1 THRU TMP-3	TRAFFIC MANAGEMENT PLANS
EC-1 THRU EC-5	EROSION CONTROL PLANS
UO-1 THRU UO-4	UTILITIES BY OTHERS PLANS
X-1 THRU X-4	CROSS-SECTIONS
S-1 THRU S-29	STRUCTURE PLANS - CULVERT

GENERAL NOTES:

2012 SPECIFICATIONS
EFFECTIVE: 01-17-2012
REVISED: 10-31-2014

GRADING AND SURFACING OR RESURFACING AND WIDENING:

THE GRADE LINES SHOWN DENOTE THE FINISHED ELEVATION OF THE PROPOSED SURFACING AT GRADE POINTS SHOWN ON THE TYPICAL SECTIONS. WHERE NO GRADE LINES ARE SHOWN, THE PROFILES SHOWN DENOTE THE TOP ELEVATION OF THE EXISTING PAVEMENT ALONG THE CENTER LINE OF SURVEY ON WHICH THE PROPOSED RESURFACING WILL BE PLACED. GRADE LINES MAY BE ADJUSTED BY THE ENGINEER IN ORDER TO SECURE A PROPER TIE-IN.

CLEARING:

CLEARING ON THIS PROJECT SHALL BE PERFORMED TO THE LIMITS ESTABLISHED BY METHOD III.

SUPERELEVATION:

ALL CURVES ON THIS PROJECT SHALL BE SUPERELEVATED IN ACCORDANCE WITH STD. NO. 225.04 USING THE RATE OF SUPERELEVATION AND RUNOFF SHOWN ON THE PLANS. SUPERELEVATION IS TO BE REVOLVED ABOUT THE GRADE POINTS SHOWN ON THE TYPICAL SECTIONS.

SHOULDER CONSTRUCTION:

ASPHALT, EARTH, AND CONCRETE SHOULDER CONSTRUCTION ON THE HIGH SIDE OF SUPERELEVATED CURVES SHALL BE IN ACCORDANCE WITH STD. NO. 560.01

SIDE ROADS:

THE CONTRACTOR WILL BE REQUIRED TO DO ALL NECESSARY WORK TO PROVIDE SUITABLE CONNECTIONS WITH ALL ROADS, STREETS, AND DRIVES ENTERING THIS PROJECT. THIS WORK WILL BE PAID FOR AT THE CONTRACT UNIT PRICE FOR THE PARTICULAR ITEMS INVOLVED.

GUARDRAIL:

THE GUARDRAIL LOCATIONS SHOWN ON THE PLANS MAY BE ADJUSTED DURING CONSTRUCTION AS DIRECTED BY THE ENGINEER. THE CONTRACTOR SHOULD CONSULT WITH THE ENGINEER PRIOR TO ORDERING GUARDRAIL MATERIAL.

SUBSURFACE PLANS:

NO SUBSURFACE PLANS ARE AVAILABLE ON THIS PROJECT. THE CONTRACTOR SHOULD MAKE HIS OWN INVESTIGATION AS TO THE SUBSURFACE CONDITIONS.

END BENTS:

THE ENGINEER SHALL CHECK THE STRUCTURE END BENT PLANS, DETAILS, AND CROSS-SECTION PRIOR TO SETTING OF THE SLOPE STAKES FOR THE EMBANKMENT OR EXCAVATION APPROACHING A BRIDGE.

UTILITIES:

UTILITY OWNERS ON THIS PROJECT ARE Davidson Water, Windstream,

City of Lexington (Power), Time Warner Cable

ANY RELOCATION OF EXISTING UTILITIES WILL BE ACCOMPLISHED BY OTHERS.

RIGHT-OF-WAY MARKERS:

ALL RIGHT-OF-WAY MARKERS ON THIS PROJECT SHALL BE PLACED BY CONTRACT.

EFF. 01-17-2012
REV. 02-29-2016

2012 ROADWAY ENGLISH STANDARD DRAWINGS

The following Roadway Standards as appear in "Roadway Standard Drawings" Highway Design Branch - N. C. Department of Transportation - Raleigh, N. C., Dated January, 2012 are applicable to this project and by reference hereby are considered a part of these plans:

STD.NO.	TITLE
DIVISION 2 - EARTHWORK	
200.03	Method of Clearing - Method III
225.02	Guide for Grading Subgrade - Secondary and Local
225.04	Method of Obtaining Superelevation - Two Lane Pavement
DIVISION 3 - PIPE CULVERTS	
300.01	Method of Pipe Installation
310.10	Driveway Pipe Construction
DIVISION 4 - MAJOR STRUCTURES	
422.10	Reinforced Bridge Approach Fills
DIVISION 5 - SUBGRADE, BASES AND SHOULDERS	
560.01	Method of Shoulder Construction - High Side of Superelevated Curve - Method I
DIVISION 8 - INCIDENTALS	
806.01	Concrete Right-of-Way Marker
840.00	Concrete Base Pad for Drainage Structures
840.14	Concrete Drop Inlet - 12" thru 30" Pipe
840.15	Brick Drop Inlet - 12" thru 30" Pipe
840.29	Frames and Narrow Slot Flat Grates
840.35	Traffic Bearing Grated Drop Inlet - for Cast Iron Double Frame and Grates
840.45	Precast Drainage Structure
840.46	Traffic Bearing Precast Drainage Structure
846.01	Concrete Curb, Gutter and Curb & Gutter
846.04	Drop Inlet Installation in Shoulder Berm Gutter
862.01	Guardrail Placement
862.02	Guardrail Installation
862.03	Structure Anchor Units (Beg. March 2013 Letting use detail in lieu of Standard)
862.04	Anchoring End of Guardrail - B-77 and B-83 Anchor Units
876.01	Rip Rap in Channels
876.02	Guide for Rip Rap at Pipe Outlets

8/17/99

02-SEP-2016 13:24
s:\structure\b5780_jr_order_home rd\b5780_dds_1a.dgn
$$$$USERNAME$$$$

04/06/15

PROJECT REFERENCE NO.	SHEET NO.
B-5780	1B

STATE OF NORTH CAROLINA, DIVISION OF HIGHWAYS

CONVENTIONAL PLAN SHEET SYMBOLS

Note: Not to Scale **S.U.E. = Subsurface Utility Engineering*

BOUNDARIES AND PROPERTY:

- State Line
- County Line
- Township Line
- City Line
- Reservation Line
- Property Line
- Existing Iron Pin — EIP
- Property Corner
- Property Monument — ECM
- Parcel/Sequence Number — 123
- Existing Fence Line
- Proposed Woven Wire Fence
- Proposed Chain Link Fence
- Proposed Barbed Wire Fence
- Existing Wetland Boundary — WLB
- Proposed Wetland Boundary — WLB
- Existing Endangered Animal Boundary — EAB
- Existing Endangered Plant Boundary — EPB
- Existing Historic Property Boundary — HPB
- Known Contamination Area: Soil
- Potential Contamination Area: Soil
- Known Contamination Area: Water
- Potential Contamination Area: Water
- Contaminated Site: Known or Potential

BUILDINGS AND OTHER CULTURE:

- Gas Pump Vent or U/G Tank Cap
- Sign — S
- Well — W
- Small Mine
- Foundation
- Area Outline
- Cemetery
- Building
- School
- Church
- Dam

HYDROLOGY:

- Stream or Body of Water
- Hydro, Pool or Reservoir
- Jurisdictional Stream — JS
- Buffer Zone 1 — BZ 1
- Buffer Zone 2 — BZ 2
- Flow Arrow
- Disappearing Stream
- Spring
- Wetland
- Proposed Lateral, Tail, Head Ditch — FLOW
- False Sump

RAILROADS:

- Standard Gauge — CSX TRANSPORTATION
- RR Signal Milepost — MILEPOST 35
- Switch — SWITCH
- RR Abandoned
- RR Dismantled

RIGHT OF WAY:

- Baseline Control Point
- Existing Right of Way Marker
- Existing Right of Way Line
- Proposed Right of Way Line — RW
- Proposed Right of Way Line with Iron Pin and Cap Marker — RW
- Proposed Right of Way Line with Concrete or Granite R/W Marker — RW
- Proposed Control of Access Line with Concrete C/A Marker — CA
- Existing Control of Access — CA
- Proposed Control of Access — CA
- Existing Easement Line — E
- Proposed Temporary Construction Easement — E
- Proposed Temporary Drainage Easement — TDE
- Proposed Permanent Drainage Easement — PDE
- Proposed Permanent Drainage / Utility Easement — DUE
- Proposed Permanent Utility Easement — PUE
- Proposed Temporary Utility Easement — TUE
- Proposed Aerial Utility Easement — AUE
- Proposed Permanent Easement with Iron Pin and Cap Marker

ROADS AND RELATED FEATURES:

- Existing Edge of Pavement
- Existing Curb
- Proposed Slope Stakes Cut — C
- Proposed Slope Stakes Fill — F
- Proposed Curb Ramp — CR
- Existing Metal Guardrail
- Proposed Guardrail
- Existing Cable Guiderail
- Proposed Cable Guiderail
- Equality Symbol
- Pavement Removal

VEGETATION:

- Single Tree
- Single Shrub
- Hedge
- Woods Line
- Orchard
- Vineyard — Vineyard

EXISTING STRUCTURES:

MAJOR:

- Bridge, Tunnel or Box Culvert — CONC
- Bridge Wing Wall, Head Wall and End Wall — CONC WW

MINOR:

- Head and End Wall — CONC HW
- Pipe Culvert
- Footbridge
- Drainage Box: Catch Basin, DI or JB — CB
- Paved Ditch Gutter
- Storm Sewer Manhole — S
- Storm Sewer — S

UTILITIES:

POWER:

- Existing Power Pole
- Proposed Power Pole
- Existing Joint Use Pole
- Proposed Joint Use Pole
- Power Manhole — P
- Power Line Tower
- Power Transformer
- U/G Power Cable Hand Hole
- H-Frame Pole
- U/G Power Line LOS B (S.U.E.*) — P
- U/G Power Line LOS C (S.U.E.*) — P
- U/G Power Line LOS D (S.U.E.*) — P

TELEPHONE:

- Existing Telephone Pole
- Proposed Telephone Pole
- Telephone Manhole — T
- Telephone Pedestal — T
- Telephone Cell Tower
- U/G Telephone Cable Hand Hole
- U/G Telephone Cable LOS B (S.U.E.*) — T
- U/G Telephone Cable LOS C (S.U.E.*) — T
- U/G Telephone Cable LOS D (S.U.E.*) — T
- U/G Telephone Conduit LOS B (S.U.E.*) — TC
- U/G Telephone Conduit LOS C (S.U.E.*) — TC
- U/G Telephone Conduit LOS D (S.U.E.*) — TC
- U/G Fiber Optics Cable LOS B (S.U.E.*) — T FO
- U/G Fiber Optics Cable LOS C (S.U.E.*) — T FO
- U/G Fiber Optics Cable LOS D (S.U.E.*) — T FO

WATER:

- Water Manhole — W
- Water Meter
- Water Valve
- Water Hydrant
- U/G Water Line LOS B (S.U.E*) — W
- U/G Water Line LOS C (S.U.E*) — W
- U/G Water Line LOS D (S.U.E*) — W
- Above Ground Water Line — A/G Water

TV:

- TV Pedestal — C
- TV Tower
- U/G TV Cable Hand Hole — HH
- U/G TV Cable LOS B (S.U.E.*) — TV
- U/G TV Cable LOS C (S.U.E.*) — TV
- U/G TV Cable LOS D (S.U.E.*) — TV
- U/G Fiber Optic Cable LOS B (S.U.E.*) — TV FO
- U/G Fiber Optic Cable LOS C (S.U.E.*) — TV FO
- U/G Fiber Optic Cable LOS D (S.U.E.*) — TV FO

GAS:

- Gas Valve
- Gas Meter
- U/G Gas Line LOS B (S.U.E.*) — G
- U/G Gas Line LOS C (S.U.E.*) — G
- U/G Gas Line LOS D (S.U.E.*) — G
- Above Ground Gas Line — A/G Gas

SANITARY SEWER:

- Sanitary Sewer Manhole
- Sanitary Sewer Cleanout
- U/G Sanitary Sewer Line — SS
- Above Ground Sanitary Sewer — A/G Sanitary Sewer
- SS Forced Main Line LOS B (S.U.E.*) — FSS
- SS Forced Main Line LOS C (S.U.E.*) — FSS
- SS Forced Main Line LOS D (S.U.E.*) — FSS

MISCELLANEOUS:

- Utility Pole
- Utility Pole with Base
- Utility Located Object
- Utility Traffic Signal Box — S
- Utility Unknown U/G Line LOS B (S.U.E.*) — ?UTL
- U/G Tank; Water, Gas, Oil
- Underground Storage Tank, Approx. Loc. — UST
- A/G Tank; Water, Gas, Oil
- Geoenvironmental Boring
- U/G Test Hole LOS A (S.U.E.*)
- Abandoned According to Utility Records — AATUR
- End of Information — E.O.I.

PROJECT REFERENCE NO.	SHEET NO.
B-5780	1C-1
Division 9 DDC	

SURVEY CONTROL SHEET B-5780

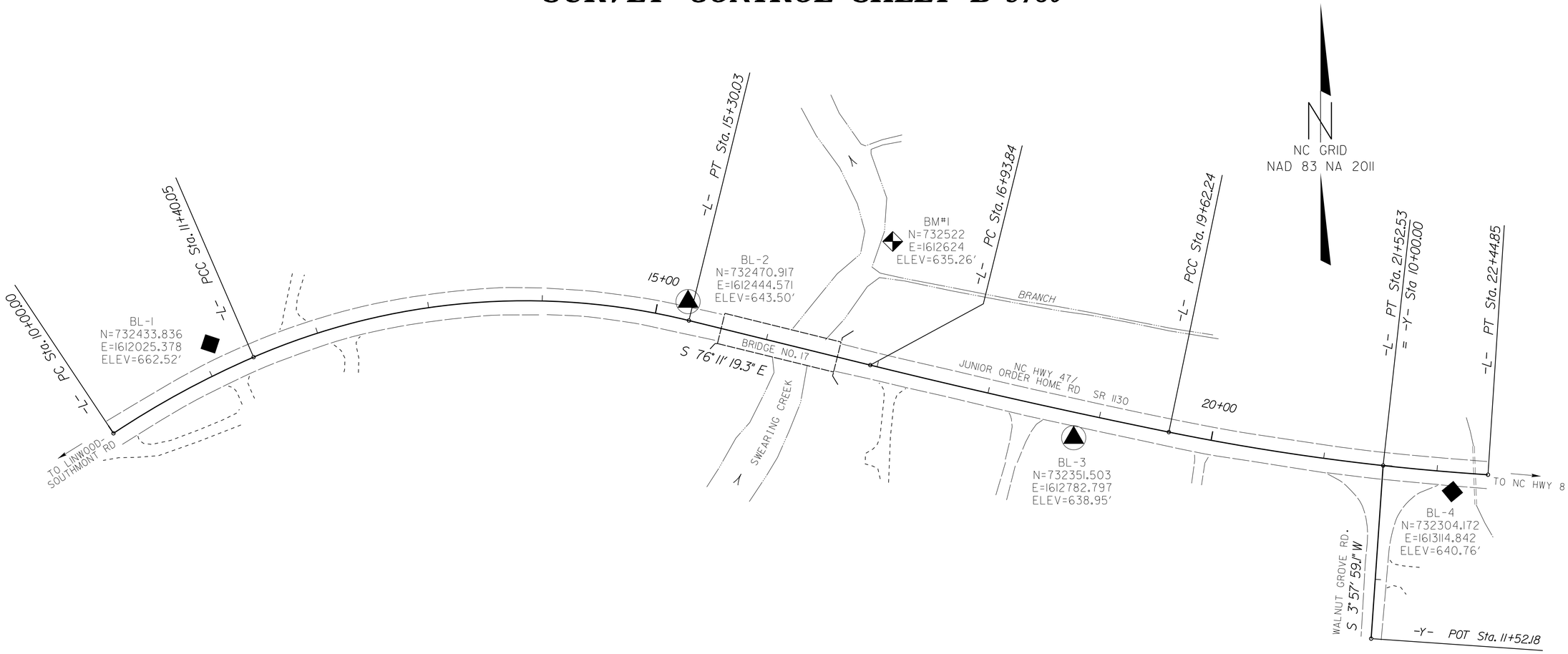

DATUM DESCRIPTION

THE LOCALIZED COORDINATE SYSTEM DEVELOPED FOR THIS PROJECT IS BASED ON THE STATE PLANE COORDINATES ESTABLISHED BY NCDOT FOR MONUMENT "BL-2"
WITH NAD 83/NA 2011 STATE PLANE GRID COORDINATES OF
NORTHING: 732470.917(ft) EASTING: 1612444.571(ft)
ELEVATION: 643.50(ft)
THE AVERAGE COMBINED GRID FACTOR USED ON THIS PROJECT (GROUND TO GRID) IS: 0.99988532
THE N.C. LAMBERT GRID BEARING AND LOCALIZED HORIZONTAL GROUND DISTANCE FROM "BL-2" TO -L- STATION 10+00.00 IS
S 77 05 11.16 W 517.02'
ALL LINEAR DIMENSIONS ARE LOCALIZED HORIZONTAL DISTANCES
VERTICAL DATUM USED IS NAVD 88

BENCHMARK (NAVD 88)
****
BM#1 ELEVATION = 635.26'
N 732522 E 1612624
-L- STA 16+88 108' LT
R/R SPIKE SET IN WEST SIDE OF 12" ELM
11' EAST OF SWEARING CREEK BANK
****

BL

POINT	DESC.	NORTH	EAST	ELEVATION	L STATION	OFFSET
1	BL-1	732433.8360	1612025.3780	662.52	11+10.68	26.42 LT
2	BL-2	732470.9170	1612444.5710	643.50	15+25.47	15.98 LT
3	BL-3	732351.5030	1612782.7970	638.95	18+81.71	21.93 RT
4	BL-4	732304.1720	1613114.8420	640.76	22+14.82	17.06 RT

NOTE: DRAWING NOT TO SCALE

NOTES:

INDICATES GEODETIC CONTROL MONUMENTS USED OR SET FOR HORIZONTAL PROJECT CONTROL BY THE NCDOT DIVISION 9 DDC UNIT.

PROJECT CONTROL ESTABLISHED USING GLOBAL POSITIONING SYSTEM.

22-AUG-2016 12:23
S:\DDC\2015-04\B5780_1_Order-Home Rd\B5780_ddc_1C-1.dgn
mpilgrim At 11/17/2016

PROJECT REFERENCE NO.	SHEET NO.
B-5780	1D-1
Division 9 DDC	

SURVEY CONTROL SHEET B-5780

DESIGN ALIGNMENT

-L-

TYPE	STATION	NORTH	EAST
PC	10+00.00	732355.3722	1611940.6243
PCC	11+40.05	732422.1804	1612063.4968
PT	15+30.03	732454.3024	1612445.3037
PC	16+93.84	732415.1976	1612604.3742
PCC	19+62.24	732356.4230	1612866.2477
PT	22+44.85	732319.0037	1613146.1510

ROW MARKER CONCRETE OR GRANITE

ALIGN	STATION	OFFSET	NORTH	EAST
L	12+00.00	30.00	732414.6544	1612128.7295
L	12+00.00	45.00	732400.3648	1612133.2911
L	12+05.00	-45.00	732487.7155	1612111.0489
L	12+05.00	-30.00	732473.3884	1612115.4913
L	14+50.00	45.00	732423.4363	1612361.7097
L	15+30.03	-45.00	732498.0014	1612456.0463
L	15+30.03	55.00	732400.8926	1612432.1738
L	16+93.84	-45.00	732458.8958	1612615.1200
L	16+93.84	55.00	732361.7871	1612591.2475
L	17+50.00	-45.00	732445.8101	1612669.3414
L	17+50.00	-30.00	732431.2139	1612665.8842
L	17+50.00	45.00	732358.2331	1612648.5983
L	17+50.00	55.00	732348.5023	1612646.2935
L	19+62.24	30.00	732327.0240	1612860.2727
L	19+62.24	45.00	732312.3245	1612857.2852

ROW MARKER PERMANENT EASEMENT

ALIGN	STATION	OFFSET	NORTH	EAST
L	18+14.00	-30.00	732416.8300	1612727.9489
L	18+14.00	-52.00	732438.2858	1612732.8123
L	18+34.00	-30.00	732412.4582	1612747.3724
L	18+34.00	-52.00	732433.9285	1612752.1708

DATUM DESCRIPTION

THE LOCALIZED COORDINATE SYSTEM DEVELOPED FOR THIS PROJECT
IS BASED ON THE STATE PLANE COORDINATES ESTABLISHED BY
NCDOT FOR MONUMENT "BL-2"
WITH NAD 83/NA 2011 STATE PLANE GRID COORDINATES OF
NORTHING: 732470.917(ft) EASTING: 1612444.571(ft)
ELEVATION: 643.50(ft)
THE AVERAGE COMBINED GRID FACTOR USED ON THIS PROJECT
(GROUND TO GRID) IS: 0.99988532
THE N.C. LAMBERT GRID BEARING AND
LOCALIZED HORIZONTAL GROUND DISTANCE FROM
"BL-2" TO -L- STATION 10+00.00 IS
S 77 05 11.16 W 517.02'
ALL LINEAR DIMENSIONS ARE LOCALIZED HORIZONTAL DISTANCES
VERTICAL DATUM USED IS NAVD 88

22-AUG-2016 12:33
S:\DDC\2015-04-B5780_Jr-Order-Home Rd\B5780_ddc_1C-2.dgn
ashelton

PROJECT REFERENCE NO.	SHEET NO.
B-5780	2A-1
ROADWAY DESIGN ENGINEER	PAVEMENT DESIGN ENGINEER

NORTH CAROLINA PROFESSIONAL SEAL 025499 ENGINEER WILLIAM A. BLANTON

DocuSigned by: 10/4/2016
William A. Blanton
CC6B57D1FDC84D4...

DOCUMENT NOT CONSIDERED FINAL UNLESS ALL SIGNATURES COMPLETED

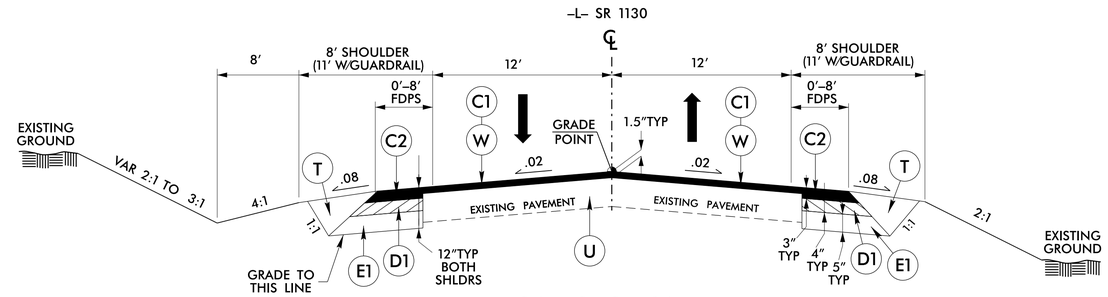

TYPICAL SECTION #1

USE TYPICAL SECTION NO. 1 AS FOLLOWS:
FROM –L– STA. 11+50 TO –L– STA. 13+25
& –L– STA. 16+75.5 +/– TO –L– STA. 20+20

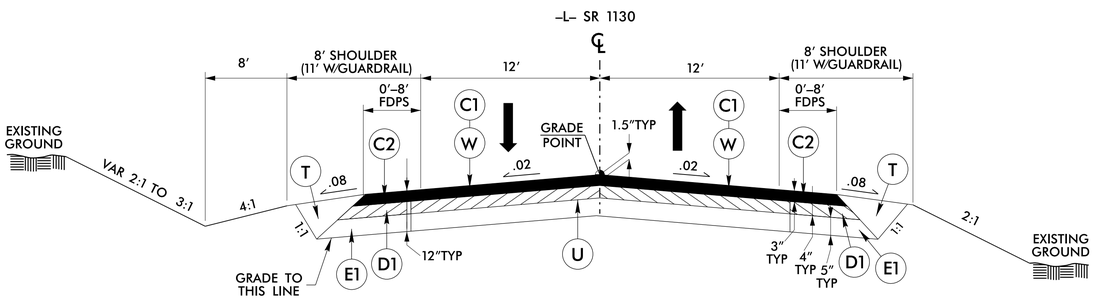

TYPICAL SECTION #2

USE TYPICAL SECTION NO. 1 AS FOLLOWS:
FROM –L– 13+25 TO –L– STA. 15+30.5 +/–

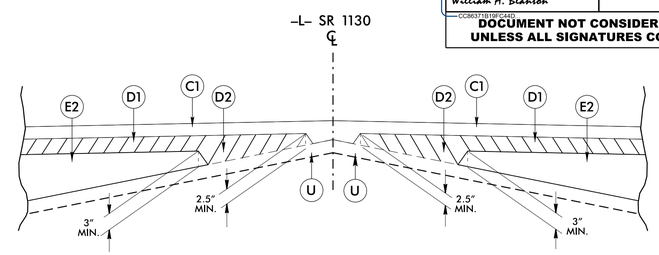

Detail Showing Method of Wedging

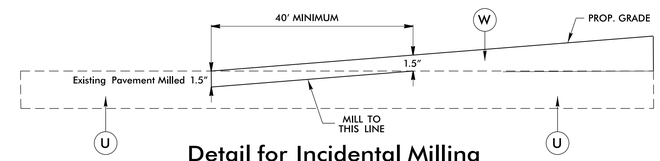

Detail for Incidental Milling of Existing Pavement

PAVEMENT SCHEDULE	
C1	PROP. APPROX. 1.5″ ASPHALT CONCRETE SURFACE COURSE, TYPE S9.5B, AT AN AVERAGE RATE OF 168 LBS. PER SQ. YD.
C2	PROP. APPROX. 3″ ASPHALT CONCRETE SURFACE COURSE, TYPE S9.5B, AT AN AVERAGE RATE OF 168 LBS. PER SQ. YD. IN EACH OF TWO LAYERS.
D1	PROP. APPROX. 4″ ASPHALT CONCRETE INTERMEDIATE COURSE, TYPE I19.0B, AT AN AVERAGE RATE OF 456 LBS. PER SQ. YD.
D2	PROP. VAR. DEPTH ASPHALT CONCRETE INTERMEDIATE COURSE, TYPE I19.0B, AT AN AVERAGE RATE OF 114 LBS. PER SQ. YD. PER 1″ DEPTH, TO BE PLACE IN LAYERS NOT LESS THAN 2.5″ IN DEPTH OR GREATER THAN 4″ IN DEPTH.
E1	PROP. APPROX. 5″ ASPHALT CONCRETE BASE COURSE, TYPE B25.0B, AT AN AVERAGE RATE OF 570 LBS. PER SQ. YD.
E2	PROP. VAR. DEPTH ASPHALT CONCRETE BASE COURSE, TYPE B25.0B, AT AN AVERAGE RATE OF 114 LBS. PER SQ. YD. PER 1″ DEPTH, TO BE PLACED IN LAYERS NOT LESS THAN 3″ IN DEPTH OR GREATER THAN 5.5″ IN DEPTH.
R	SHOULDER BERM GUTTER
T	EARTH MATERIAL
U	EXISTING PAVEMENT
W	VARIABLE DEPTH ASPHALT PAVEMENT (SEE WEDGING DETAIL)

NOTE: PAVEMENT EDGE SLOPES ARE 1:1 UNLESS SHOWN OTHERWISE.

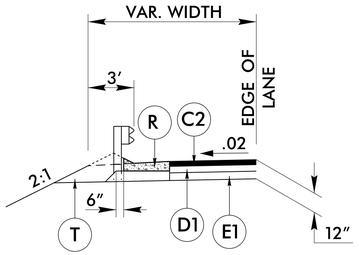

DETAIL FOR SHOULDER BERM GUTTER

USE IN CONJUNCTION WITH
TYPICAL SECTION NO. 1 & 2

–L– STA. 14+00 TO –L– STA. 15+12 (BEG APPROACH SLAB) +/– RT
–L– STA. 16+82 (END APPROACH SLAB) TO –L– STA. 17+00 +/– RT
–L– STA. 16+93 (END APPROACH SLAB) TO –L– STA. 18+30 +/– LT

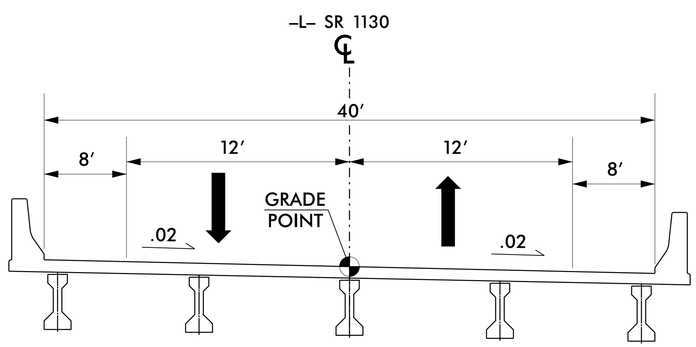

TYPICAL SECTION OVER STRUCTURE

–L– STA. 15+30.5 +/– TO 16+75.5 +/–

6/2/99
02-SEP-2016 14:23
s:\STD_Proj\B5780_Jr-Order-Home Rd\B5780_ddc_typ.dgn
$$$$USERNAME$$$$

6/21/00

COMPUTED BY:	DATE:
CHECKED BY:	DATE:

STATE OF NORTH CAROLINA
DIVISION OF HIGHWAYS

PROJECT REFERENCE NO.	SHEET NO.
B-5780	3B-1

SUMMARY OF EARTHWORK

STATION	STATION	UNCL. EXCAV.	EMBANK. +20%	BORROW	WASTE
12+00 -L-	15+00	234	1440	1206	0
17+00 -L-	19+50	336	180	0	156
SUBTOTALS:		570	1620	1206	156
LOSS DUE TO CLEAR & GRUBB		-40			
WASTE TO REPLACE BORROW				-156	-156
PROJECT TOTALS		530	1620	1050	0
GRAND TOTALS		530	1620	1050	0
SAY		530		1050	

NOTE:
1) EARTHWORK QUANTITIES ARE CALCULATED BY DDC UNIT.

2) APPROXIMATE QUANTITIES ONLY, UNCLASSIFIED EXCAVATION, SHOULDER BORROW, FINE GRADING, CLARING AND GRUBBING, BREAKING OF EXISTING ASPHALT, AND REMOVAL OF EXISTING ASPHALT WILL BE PAID FOR AT THE CONTRACT LUMP SUM PRICE FOR "GRADING".

PAVEMENT REMOVAL SUMMARY

SURVEY LINE	STATION	STATION	LOCATION LT/RT/CL	YD²
L	13+25	15+30.5	LT/RT	23
			TOTAL:	23
			SAY:	23

PARCEL INDEX

PARCEL NO.	SHEET NO.	PROPERTY OWNERS NAMES
1	4	ELISHA & PAULETTE CHAVIS
2	4	JDS FAMILY, LLC
3	4	DAVID & THELMA TRENT
4	4	MARCIA & CHARLES MYERS
5	4	HELEN PARKS
6	4	RANDALL CASHATT & JEANA BUNTON

SHOULDER BERM GUTTER SUMMARY

SURVEY LINE	STATION	STATION	LENGTH
L (RT)	14+00	15+12.5	112.5'
L (RT)	16+82	17+00	18'
L (LT)	16+92	18+30	138'
		TOTAL:	268.5'
		SAY:	270'

NOTE: Invert Elevations are for Bid Purposes only and shall not be used for project construction stakeout.
See "Standard Specifications For Roads and Structures, Section 300-5".

LIST OF PIPES, ENDWALLS, ETC. (FOR PIPES 48" & UNDER)

STATION	LOCATION (LT,RT, OR CL)	STRUCTURE NO. FROM	STRUCTURE NO. TO	TOP ELEVATION	INVERT ELEVATION	INVERT ELEVATION	SLOPE CRITICAL	DRAINAGE PIPE (RCP, CSP, CAAP, HDPE, or PVC) 12"	15"	18"	24"	30"	36"	42"	48"	C.S. PIPE (UNLESS NOTED OTHRWISE) 12" .064	15" .064	18" .064	24" .064	30" .079	36" .079	42" .109	48" .109	CLASS III R.C. PIPE (UNLESS OTHERWISE NOTED) 12"	15"	18"	24"	30"	36"	42"	48"
16+92	RT	401		642.7																											
	RT	401	402		639.9	638.9			20'																						
15+02	RT	403		646.6																											
	RT	403	404		643.6	636.0			25'																						
18+24	LT	405		640.1																											
		405	406		637.4	635.0			16'																						
12+25	RT	407																													
18+35	RT	408																													
TOTAL									61'																						

STATION	15" SIDE DRAIN PIPE	18" SIDE DRAIN PIPE	24" SIDE DRAIN PIPE	ENDWALLS STD. 838.01, STD. 838.11 OR STD. 838.80 (UNLESS NOTED OTHERWISE) CU. YDS. R.C.P.	C.S.P.	QUANTITIES FOR DRAINAGE STRUCTURES PER EACH (0' THRU 5.0')	LIN. *FT. A 5.0' THRU 10.0'	B 10.0' AND ABOVE	C.B. STD. 840.01 OR STD. 840.02	FRAME, GRATES AND HOOD STANDARD 840.03 TYPE OF GRATE E	F	G	D.I. STD. 840.14 OR STD. 840.15	D.I. FRAME & GRATE STD. 840.16	G.D.I. TYPE "A" STD. 840.17 OR 840.26	G.D.I. TYPE "B" STD. 840.18 OR 840.27	G.D.I. TYPE "D" STD. 840.19 OR 840.28	G.D.I. FRAME WITH GRATE STD. 840.22	G.D.I. FRAME WITH TWO GRATES STD. 840.29	G.D.I. (N.S.) FRAME WITH GRATE STD. 840.24	G.D.I. (N.S.) FRAME WITH TWO GRATES STD. 840.24	J.B. STD. 840.31 OR 840.32	TBDI STD. 840.35	CORR. STEEL ELBOWS NO. & SIZE	CONC. COLLARS CL. "B" C.Y. STD 840.72	CONC. & BRICK PIPE PLUG, C.Y. STD. 840.71	PIPE REMOVAL LIN.FT.	REMARKS
16+92						1													1				1					
																												2 - 15" ELBOWS
15+02						1													1				1					
																												2 - 15" ELBOWS
18+24						1													1				1					
																												2 - 15" ELBOWS
12+25	24'																										24'	
18+35	32'																										24'	
TOTAL	56'					3													3				3				48'	

ABBREVIATIONS

C.B.	CATCH BASIN
N.D.I.	NARROW DROP INLET
D.I.	DROP INLET
G.D.I.	GRATED DROP INLET
G.D.I. (N.S.)	GRATED DROP INLET (NARROW SLOT)
J.B.	JUNCTION BOX
M.H.	MANHOLE
T.B.D.I.	TRAFFIC BEARING DROP INLET
T.B.J.B.	TRAFFIC BEARING JUNCTION BOX

"N" = DISTANCE FROM EDGE OF LANE TO FACE OF GUARDRAIL.
TOTAL SHOULDER WIDTH = DISTANCE FROM EDGE OF TRAVEL LANE TO SHOULDER BREAK POINT.
FLARE LENGTH = DISTANCE FROM LAST SECTION OF PARALLEL GUARDRAIL TO END OF GUARDRAIL.
W = TOTAL WIDTH OF FLARE FROM BEGINNING OF TAPER TO END OF GUARDRAIL.
G = GATING IMPACT ATTENUATOR TYPE 350
NG = NON-GATING IMPACT ATTENUATOR TYPE 350

GUARDRAIL SUMMARY

SURVEY LINE	BEG. STA.	END STA.	LOCATION	LENGTH STRAIGHT	SHOP CURVED	DOUBLE FACED	WARRANT POINT APPROACH END	TRAILING END	"N" DIST. FROM E.O.L.	TOTAL SHOUL. WIDTH	FLARE LENGTH APPROACH END	TRAILING END	W APPROACH END	TRAILING END
-L-	13+94	15+36	LT	142'					8'	11'		50'		1'
-L-	13+05	15+25	RT	220'					8'	11'	50'		1'	
-L-	16+80	18+92.5	LT	212.5'					8'	11'	50'		1'	
-L-	16+70	17+17	RT	47'					8'	11'		25'		1'
LESS ANCHOR DEDUCTIONS:		GRAU 350 3 @ 50'		-150'										
		B-77 4 @ 18.75'		-75'										
		TL-2 1 @ 25'		-25'										
			TOTAL	371.5										
			SAY	375'										

ROW	ANCHORS XI MOD	TL-2	GRAU 350	B-77	XIII	CAT-1	VI MOD	BIC	AT-1	IMPACT ATTENUATOR TYPE 350 EA	G	NG	SINGLE FACED GUARDRAIL	REMOVE EXISTING GUARDRAIL	REMOVE AND STOCKPILE EXISTING GUARDRAIL	REMARKS
13+94			1	1												
13+05			1	1												
16+80			1	1												
16+70		1		1												
TOTAL		1	3	4												
SAY		1	3	4												

15-SEP-2016 10:11
S:\DDC\2015-04-B5780-Jr-Order-Home Rd\B5780_ddc_psh_3B-1.dgn
wablanton AT DIV9-294552

PROJECT REFERENCE NO.	SHEET NO.
B-5780	4
R/W SHEET NO.	

ROADWAY DESIGN ENGINEER
NORTH CAROLINA PROFESSIONAL SEAL 025499 ENGINEER WILLIAM A. BLANTON
10/6/2016
DocuSigned by: William A. Blanton
CC8067D1B9C4DD...

HYDRAULICS ENGINEER
NORTH CAROLINA PROFESSIONAL SEAL 042644 ENGINEER Craig J. Lee
10/6/2016
DocuSigned by: Craig Lee
C7C5D0D0D1B0E...

DOCUMENT NOT CONSIDERED FINAL UNLESS ALL SIGNATURES COMPLETED

-L-

PI Sta 10+70.21	PI Sta 13+42.21	PI Sta 18+28.06	PI Sta 21+03.76
△ = 10° 12' 31.3" (RT)	△ = 37° 14' 26.7" (RT)	△ = 2° 19' 23.0" (LT)	△ = 7° 44' 51.0" (LT)
D = 7° 17' 22.3"	D = 9° 32' 57.5"	D = 0° 51' 55.8"	D = 2° 44' 29.1"
L = 140.05'	L = 389.98'	L = 268.41'	L = 282.61'
T = 70.21'	T = 202.16'	T = 134.22'	T = 141.52'
R = 786.00'	R = 600.00'	R = 6,620.00'	R = 2,090.00'
SE=EXIST	SE=SEE PLANS	SE=EXIST	SE=EXIST
RO=SEE PLANS	RO=SEE PLANS	RO=SEE PLANS	RO=SEE PLANS

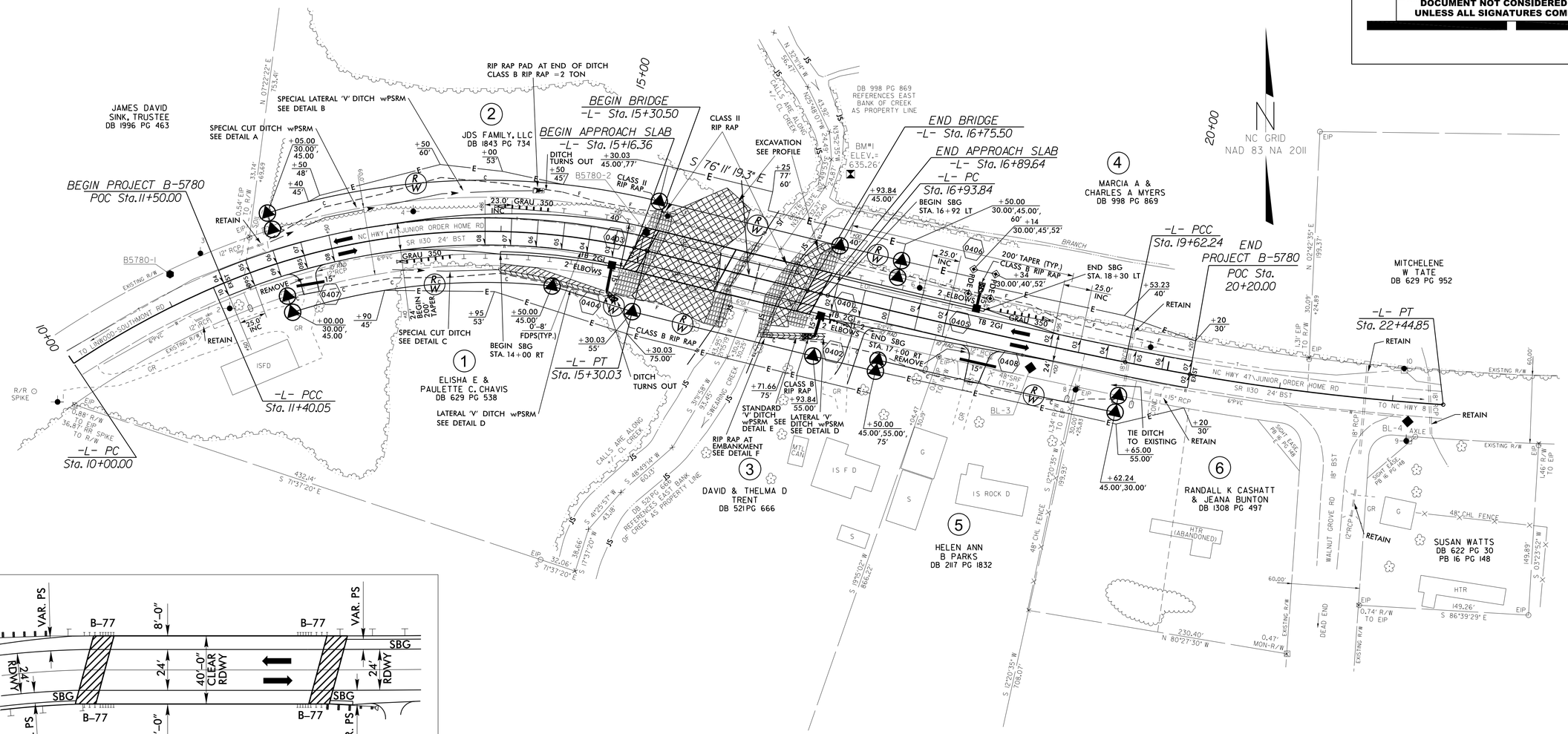

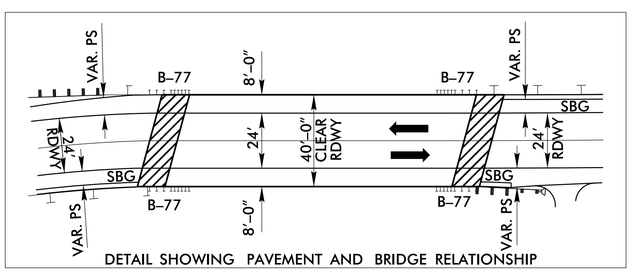

DETAIL SHOWING PAVEMENT AND BRIDGE RELATIONSHIP

NOTE:
SEE SHEET 5 FOR -L- PROFILE
SEE SHEETS S-1 THRU S-29 FOR STRUCTURE PLANS

DETAIL A
SPECIAL CUT DITCH wPSRM
(Not to Scale)

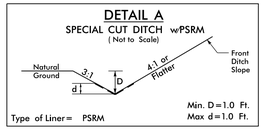

Type of Liner= PSRM

-L- Sta. 12+00 to Sta. 13+50 LT

DETAIL B
SPECIAL LATERAL 'V' DITCH wPSRM
(Not to Scale)

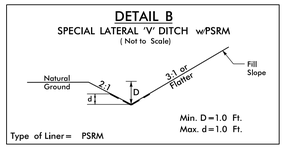

Type of Liner= PSRM

-L- Sta. 13+50 to Sta. 14+35 LT

DETAIL C
SPECIAL CUT DITCH
(Not to Scale)

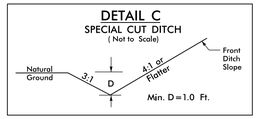

-L- Sta. 13+00 to Sta. 14+00 RT

DETAIL D
LATERAL 'V' DITCH wPSRM
(Not to Scale)

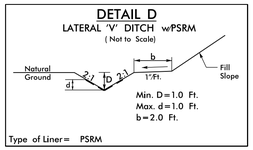

Type of Liner= PSRM

-L- Sta. 14+00 to Sta. 15+00 RT
-L- Sta. 16+85 to Sta. 17+00 RT

DETAIL E
STANDARD 'V' DITCH wPSRM
(Not to Scale)

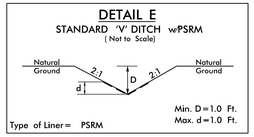

Type of Liner= PSRM

-L- Sta. 16+46 to Sta. 16+85 RT s=10% DDE=7cy

DETAIL F
RIP RAP AT EMBANKMENT
(Not to Scale)

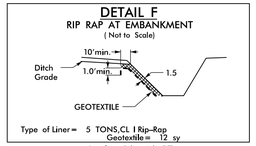

Type of Liner= 5 TONS,CL I Rip-Rap
Geotextile= 12 sy

-L- Sta. 16+46 RT

REVISIONS

8/17/99

05-OCT-2016 14:17
s:\dl\projects\b5780-jr-order-home rd\b5780_dtr_psh4.dgn
$$$$USERNAME$$$$

PROJECT REFERENCE NO.	SHEET NO.
B-5780	5

ROADWAY DESIGN ENGINEER
NORTH CAROLINA PROFESSIONAL SEAL 025499 ENGINEER WILLIAM A. BLANTON
DocuSigned by: William A. Blanton
10/6/2016

HYDRAULICS ENGINEER
NORTH CAROLINA PROFESSIONAL SEAL 042644 ENGINEER Craig J. Lee
DocuSigned by: Craig Lee
10/6/2016

DOCUMENT NOT CONSIDERED FINAL UNLESS ALL SIGNATURES COMPLETED

10/6/2016 10/6/2016

-L-

Sta.16+03 -L-
1@70' & 1@75'
45" PRESTRESSED CONCRETE GIRDER
W/ 4' CAPS
G.P.ELEV = 644.8'
SKEW = 105 DEGREES

PI = 12+00.00
EL = 658.69'
VC = 100'
K = 85
DS= 50 MPH

BEGIN GRADE
-L- STA.11+50.00
EL.660.42

PI = 14+20.00
EL = 648.50'
VC = 260'
K = 99
DS= 50 MPH

BEGIN BRIDGE
STA.15+30.50

END BRIDGE
STA.16+75.50

PI = 19+50.00
EL = 637.89'
VC = 300'
K = 98
DS= 50 MPH

END GRADE
-L- STA.20+20.00
EL.638.97

(-)3.4540%
(-)4.6337%
(-)5.0000%
(-)4.6337%
(-)12.0016%
(-)6.0000%
(-)7.0000%
(-)7.6667%
(-)12.0016%
(+)10.0000%
(+)11.0669%

-L- STA 13+00.000
ELEV = 653.00

-L- STA 13+50.000
ELEV = 647.50

BEGIN SPECIAL DITCH GRADE LT
-L- STA 12+00
ELEV=658.00

EXISTING GRADE

BEGIN SPECIAL DITCH GRADE RT
-L- STA 13+00
ELEV = 650.50

PROPOSED GRADE

EXISTING BRIDGE

CLASS II RIP RAP
KEY-IN 3.5'
1.5:1 NORMAL

END SPECIAL DITCH GRADE RT
-L- STA 17+00
ELEV = 638.90

NWS=629.8'

EXCAVATION TO NATURAL GROUND
APPROX.ELEV=634.5'

EXCAVATION TO NATURAL GROUND
APPROX.ELEV=635.0'

END SPECIAL DITCH GRADE LT
-L- STA 14+35
ELEV=643.55

END SPECIAL DITCH GRADE RT
-L- STA 15+00
ELEV = 636.00

CLASS II RIP RAP
KEY-IN 3.5'
1.5:1 NORMAL

CLASS II RIP RAP
1.5:1 OR FLATTER

BEGIN SPECIAL DITCH GRADE RT
-L- STA 16+46
ELEV = 633.50

670
660
650
640
630
620
610
600
590
580
570

11+00 12+00 13+00 14+00 15+00 16+00 17+00 18+00 19+00 20+00 21+00 22+00

BRIDGE HYDRAULIC DATA

DESIGN DISCHARGE	=	6,000	CFS
DESIGN FREQUENCY	=	50	YRS
DESIGN HW ELEVATION	=	643.5	FT
BASE DISCHARGE	=	6,900	CFS
BASE FREQUENCY	=	100	YRS
BASE HW ELEVATION	=	644.24	FT
OVERTOPPING DISCHARGE	=	5,100	CFS
OVERTOPPING FREQUENCY	=	25	YRS
OVERTOPPING ELEVATION	=	642.3	FT
DATE OF SURVEY	=	5/18/2015	
W.S.ELEVATION AT DATE OF SURVEY	=	629.8	FT

DITCH LEGEND	
LEFT DITCH	-·-·-·-·-
RIGHT DITCH	----------

FOR -L- PLAN SEE SHEET 4

5/14/99

05-OCT-2016 15:17
s:\DOCUMENTS\B5780-Jr-Order-Home Rd\B5780_dds_pfl.dgn
$$$$USERNAME$$$$

DocuSign Envelope ID: 6D8DF712-C24F-425D-A354-3919C21ECA99

STATE OF NORTH CAROLINA
DIVISION OF HIGHWAYS

TRANSPORTATION MANAGEMENT PLAN

DAVIDSON COUNTY

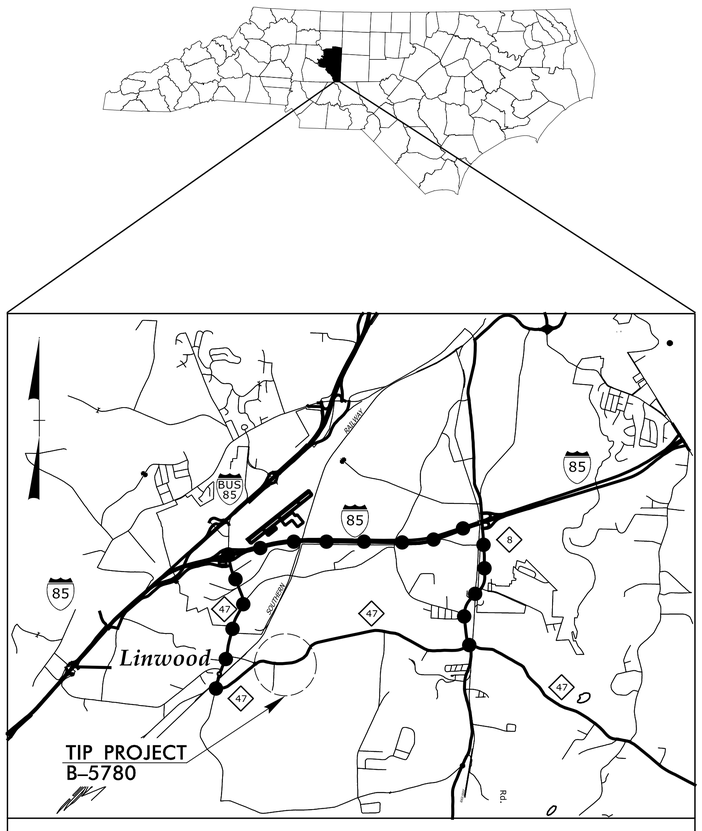

DETOUR ROUTE

SKETCH MAP SHOWING THE VICINITY OF STATE PROJECT B-5780

LOCATION: REPLACE EXISTING BRIDGE NO. 17 OVER SWEARING CREEK ON NC 47 (JUNIOR ORDER HOME RD.)

TYPE OF WORK: GRADING, DRAINAGE, PAVING, AND STRUCTURE

INDEX OF SHEETS

SHEET NO.	TITLE
TMP-1	TITLE SHEET, VICINITY MAP, AND INDEX OF SHEETS
TMP-1A	LIST OF APPLICABLE ROADWAY STANDARD DRAWINGS, AND LEGEND
TMP-1B	TRANSPORTATION OPERATIONS PLAN: MANAGEMENT STRATEGY, GENERAL NOTES, LOCAL NOTES AND PHASING
TMP-2	DETOUR FOR NC 47 (JUNIOR ORDER HOME RD) CLOSURE
TMP-3	ROAD CLOSURE SIGNS AND DETOUR SIGNS

SHEET NO.
TMP-1

B-5780

TIP PROJECT:

DOCUMENT NOT CONSIDERED FINAL UNLESS ALL SIGNATURES COMPLETED

WORK ZONE SAFETY & MOBILITY
"from the MOUNTAINS to the COAST"

N.C.D.O.T. WORK ZONE TRAFFIC CONTROL
1561 MAIL SERVICE CENTER (MSC) RALEIGH, NC 27699-1561
750 N. GREENFIELD PARKWAY, GARNER, NC 27529 (DELIVERY)
PHONE: (919) 773-2800 FAX: (919) 771-2745

J. S. BOURNE, P.E. — STATE TRAFFIC MANAGEMENT ENGINEER
D. W. BISSETTE, P.E. — TRAFFIC CONTROL PROJECT ENGINEER
_____ — TRAFFIC CONTROL PROJECT DESIGN ENGINEER
A. LYUDMIRSKAYA — TRAFFIC CONTROL DESIGN ENGINEER

DIVISION OF HIGHWAYS · STATE OF NORTH CAROLINA · DEPARTMENT OF TRANSPORTATION · WORK ZONE TRAFFIC CONTROL

ICA Engineering
5121 Kingdom Way, Suite 100
Raleigh, NC 27607
NC License No: P-0258

APPROVED: DocuSigned by: Michael T. Rzepka 01BC3480C28049D...

DATE: 8/29/2016

SEAL

NORTH CAROLINA PROFESSIONAL SEAL 15876 ENGINEER MICHAEL T. RZEPKA

8/29/2016
P:\TRAFFIC\b-5780\TCP\b5780_tmp_title_1.dgn
ICA Engineering

DocuSign Envelope ID: 6D8DF712-C24F-425D-A354-3919C21ECA99

ICA Engineering
5121 Kingdom Way, Suite 100
Raleigh, NC 27607
NC License No: P-0884

PROJ. REFERENCE NO.	SHEET NO.
B-5780	TMP-1A

ROADWAY STANDARD DRAWINGS

THE FOLLOWING ROADWAY STANDARDS AS SHOWN IN "ROADWAY STANDARD DRAWINGS" - PROJECT SERVICES UNIT - N.C. DEPARTMENT OF TRANSPORTATION - RALEIGH, N.C., DATED JANUARY 2012 ARE APPLICABLE TO THIS PROJECT AND BY REFERENCE HEREBY ARE CONSIDERED A PART OF THESE PLANS:

STD. NO.	TITLE
1101.03	TEMPORARY ROAD CLOSURES
1101.11	TRAFFIC CONTROL DESIGN TABLES
1110.01	STATIONARY WORK ZONE SIGNS
1130.01	DRUM
1145.01	BARRICADES

LEGEND

GENERAL

NORTH ARROW

TRAFFIC CONTROL DEVICES

BARRICADE (TYPE III)

CONE

DRUM SKINNY DRUM TUBULAR MARKER

CHANGEABLE MESSAGE SIGN

TEMPORARY SIGNING

STATIONARY SIGN

APPROVED: DocuSigned by: Michael T. Rzepka 01BC3480C260490...

DATE: 8/29/2016

SEAL

NORTH CAROLINA PROFESSIONAL SEAL 15876 ENGINEER MICHAEL T. RZEPKA

DOCUMENT NOT CONSIDERED FINAL UNLESS ALL SIGNATURES COMPLETED

DIVISION OF HIGHWAYS STATE OF NORTH CAROLINA DEPARTMENT OF TRANSPORTATION WORK ZONE TRAFFIC CONTROL

ROADWAY STANDARD DRAWINGS AND LEGEND

8/29/2016
P:\TRAFFIC\b-5780\TCP\b5780_tmp_title_la.dgn
ICA Engineering

DocuSign Envelope ID: 6D8DF712-C24F-425D-A354-3919C21ECA99

ICA Engineering
5121 Kingdom Way, Suite 100
Raleigh, NC 27607
NC License No: P-0884

PROJ. REFERENCE NO.	SHEET NO.
B-5780	TMP-1B

GENERAL NOTES

CHANGES MAY BE REQUIRED WHEN PHYSICAL DIMENSIONS IN THE DETAIL DRAWINGS, STANDARD DETAILS, AND ROADWAY DETAILS ARE NOT ATTAINABLE TO MEET FIELD CONDITIONS OR RESULT IN DUPLICATE OR UNDESIRED OVERLAPPING OF DEVICES. MODIFICATION MAY INCLUDE: MOVING, SUPPLEMENTING, COVERING, OR REMOVAL OF DEVICES AS DIRECTED BY THE ENGINEER.

THE FOLLOWING GENERAL NOTES APPLY AT ALL TIMES FOR THE DURATION OF THE CONSTRUCTION PROJECT EXCEPT WHEN OTHERWISE NOTED IN THE PLAN OR DIRECTED BY THE ENGINEER.

TRAFFIC PATTERN ALTERATIONS

A) NOTIFY THE ENGINEER TWENTY ONE (21) CALENDAR DAYS PRIOR TO ANY TRAFFIC PATTERN ALTERATION.

SIGNING

B) PROVIDE SIGNING AND DEVICES REQUIRED TO CLOSE THE ROAD ACCORDING TO THE ROADWAY STANDARD DRAWINGS AND TRAFFIC CONTROL PLANS.

PROVIDE SIGNING REQUIRED FOR THE OFF-SITE DETOUR ROUTE AS SHOWN IN THE TRAFFIC CONTROL PLANS.

C) COVER OR REMOVE ALL SIGNS AND DEVICES REQUIRED TO CLOSE THE ROAD WHEN ROAD CLOSURE IS NOT IN OPERATION.

COVER OR REMOVE ALL SIGNS REQUIRED FOR THE OFF-SITE DETOUR WHEN THE DETOUR IS NOT IN OPERATION.

D) ENSURE ALL NECESSARY SIGNING IS IN PLACE PRIOR TO ALTERING ANY TRAFFIC PATTERN.

LOCAL NOTES

1) MAINTAIN ACCESS TO ALL RESIDENCES AND BUSINESSES BETWEEN THE CLOSURE POINTS AT ALL TIMES DURING CONSTRUCTION.

MANAGEMENT STRATEGY

THIS PROJECT CONSISTS OF REPLACING BRIDGE NO. 17 OVER SWEARING CREEK ON NC 47 (JUNIOR ORDER HOME RD). DURING CONSTRUCITON, NC 47 (JUNIOR ORDER HOME RD) WILL BE CLOSED AT THE CONSTRUCTION LIMITS AND TRAFFIC WILL BE PLACED ON AN OFF-SITE DETOUR ALONG NC 47, I-85 & NC 8.

NC 47 (JUNIOR ORDER HOME RD) WILL BE REOPENED TO 2-LANE/2-WAY TRAFFIC UPON COMPLETION OF CONSTRUCTION.

PHASING

STEP 1

ON JUNIOR ORDER HOME ROAD, INSTALL AND ACTIVATE CMS BOARDS 14 DAYS BEFORE CLOSING NC 47 (JUNIOR ORDER HOME RD.) IN STEP 2 (SEE TMP-2).

STEP 2

USING ROADWAY STANDARD DRAWING 1101.03 (SHEET 1 OF 9), INSTALL ROAD CLOSURE AND DETOUR SIGNS ASSOCIATED WITH STEP 1, CLOSE NC 47 (JUNIOR ORDER HOME RD.) AND DETOUR TRAFFIC (SEE TMP-2). REMOVE CMS BOARDS ON JUNIOR ORDER HOME ROAD ONCE DETOUR IS IN PLACE. INSTALL AND ACTIVATE ONE CMS BOARD ON NC 47 AT I-85 DURING ROAD CLOSURE (SEE TMP-2).

STEP 3

AWAY FROM TRAFFIC, REMOVE EXISTING STRUCTURE.

STEP 4

AWAY FROM TRAFFIC, CONSTRUCT PROPOSED STRUCTURE AND ROADWAY.

STEP 5

AWAY FROM TRAFFIC, PLACE FINAL PAVEMENT MARKINGS AND MARKERS ON NC 47 (JUNIOR ORDER HOME RD.) AND OPEN ROAD TO TRAFFIC.

STEP 6

REMOVE ALL WORK ZONE TRAFFIC CONTROL DEVICES.

APPROVED: DocuSigned by: Michael T. Rzepka 01BC3480C260490...

DATE: 8/29/2016

SEAL

NORTH CAROLINA PROFESSIONAL SEAL 15876 ENGINEER MICHAEL T. RZEPKA

DOCUMENT NOT CONSIDERED FINAL UNLESS ALL SIGNATURES COMPLETED

DIVISION OF HIGHWAYS · STATE OF NORTH CAROLINA · DEPARTMENT OF TRANSPORTATION · WORK ZONE TRAFFIC CONTROL

TRANSPORTATION OPERATIONS PLAN

8/29/2016
P:\TRAFFIC\b-5780\TCP\b5780_tmp_title_lb.dgn
ICA Engineering

DocuSign Envelope ID: 6D8DF712-C24F-425D-A354-3919C21ECA99

ICA Engineering
5121 Kingdom Way, Suite 100
Raleigh, NC 27607
NC License No: P-0208

PROJ. REFERENCE NO.	SHEET NO.
B-5780	TMP-2

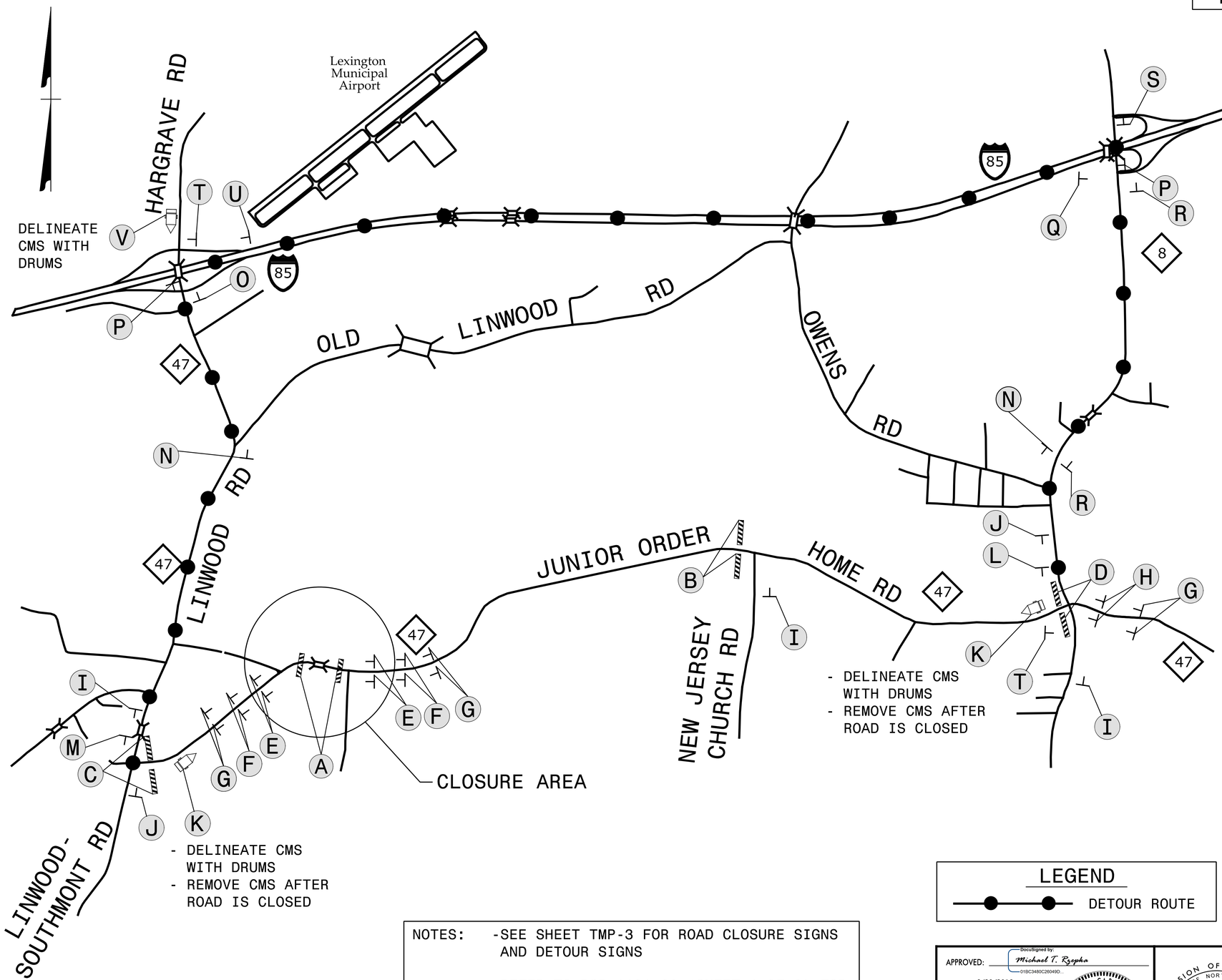

NOTES:
- SEE SHEET TMP-3 FOR ROAD CLOSURE SIGNS AND DETOUR SIGNS
- REFER TO RSD 1101.03,(SHEET 1 OF 9) FOR APPLICABLE NOTES

LEGEND

DETOUR ROUTE

APPROVED: DocuSigned by: Michael T. Rzepka 01BC3480C26049D...

DATE: 8/29/2016

SEAL

NORTH CAROLINA PROFESSIONAL SEAL 15876 ENGINEER MICHAEL T. RZEPKA

DOCUMENT NOT CONSIDERED FINAL UNLESS ALL SIGNATURES COMPLETED

DIVISION OF HIGHWAYS STATE OF NORTH CAROLINA DEPARTMENT OF TRANSPORTATION WORK ZONE TRAFFIC CONTROL

DETOUR FOR NC 47 (JUNIOR ORDER HOME RD) CLOSURE

8/29/2016
P:\TRAFFIC\b-5780\TCP\b5780_tmp_det_2.dgn
ICA Engineering

DocuSign Envelope ID: 6D8DF712-C24F-425D-A354-3919C21ECA99

ICA Engineering
5121 Kingdom Way, Suite 100
Raleigh, NC 27607
NC License No. F-0208

PROJ. REFERENCE NO.	SHEET NO.
B-5780	TMP-3

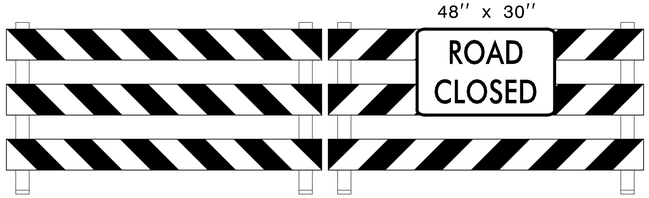

TYPE III BARRICADE(S)

A

TYPE III BARRICADE

B

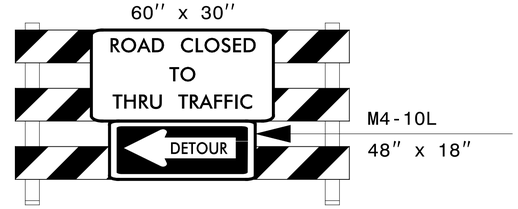

TYPE III BARRICADE

C

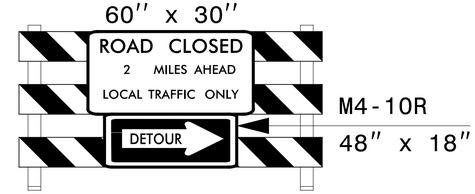

TYPE III BARRICADE

D

E

F

G

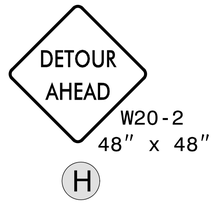

H

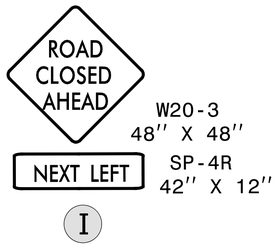

I

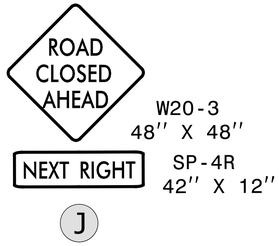

J

MESSAGE AS SHOWN OR AS DIRECTED BY THE ENGINEER

MESSAGE NO. 1	MESSAGE NO. 2
NC 47 TO CLOSE	ON (DATE)

CHANGEABLE MESSAGE SIGN

K

ACTIVATE CMS 14 DAYS PRIOR TO ROAD CLOSURE

REMOVE CMS AFTER ROAD CLOSURE

DELINEATE WITH DRUMS

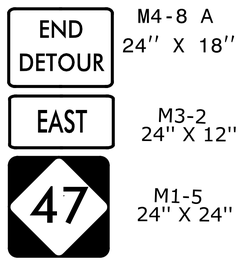

L

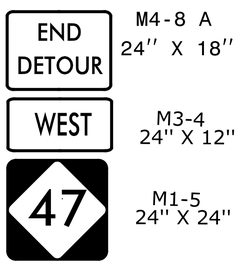

M

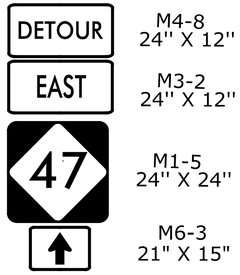

N

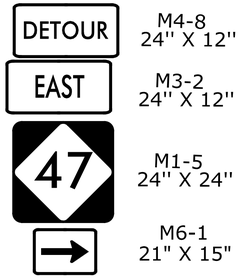

O

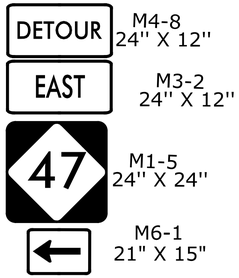

P

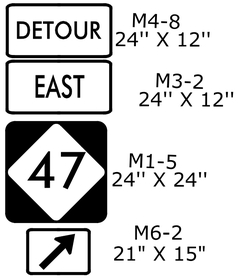

Q

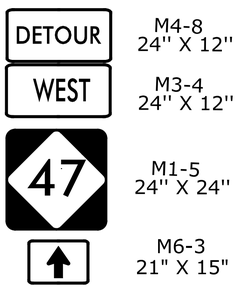

R

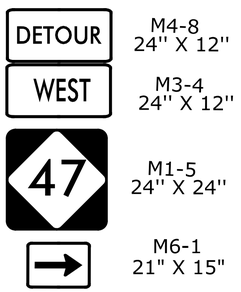

S

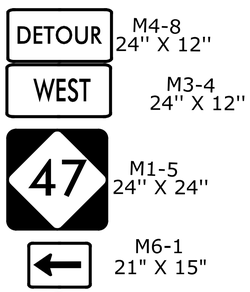

T

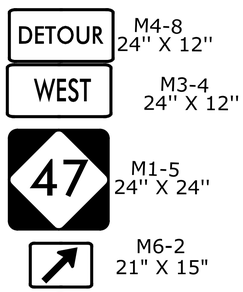

U

MESSAGE AS SHOWN OR AS DIRECTED BY THE ENGINEER

MESSAGE NO. 1	MESSAGE NO. 2
JR ORDER HOME RD CLOSED	DETOUR NC 47 EAST

CHANGEABLE MESSAGE SIGN

V

DELINEATE WITH DRUMS

APPROVED: DocuSigned by: Michael T. Rzepka 01BC3480C26049D...

DATE: 8/29/2016

SEAL

NORTH CAROLINA PROFESSIONAL SEAL 15876 ENGINEER MICHAEL T. RZEPKA

DOCUMENT NOT CONSIDERED FINAL UNLESS ALL SIGNATURES COMPLETED

DIVISION OF HIGHWAYS STATE OF NORTH CAROLINA DEPARTMENT OF TRANSPORTATION WORK ZONE TRAFFIC CONTROL

ROAD CLOSURE SIGNS AND DETOUR SIGNS

8/29/2016
P:\TRAFFIC\b-5780\TCP\b5780_tmp_det_3.dgn
ICA Engineering

TIP PROJECT: B-5780

STATE OF NORTH CAROLINA
DIVISION OF HIGHWAYS

PLAN FOR PROPOSED
HIGHWAY EROSION CONTROL

DAVIDSON COUNTY

***LOCATION:** REPLACE EXISTING BRIDGE NO. 17 OVER SWEARING CREEK ON NC 47 (JUNIOR ORDER HOME RD.)*

***TYPE OF WORK:** GRADING, DRAINAGE, PAVING, AND STRUCTURE*

STATE	STATE PROJECT REFERENCE NO.	SHEET NO.	TOTAL SHEETS
N.C.	B-5780	EC-1	

STATE PROJ. NO.	F. A. PROJ. NO.	DESCRIPTION

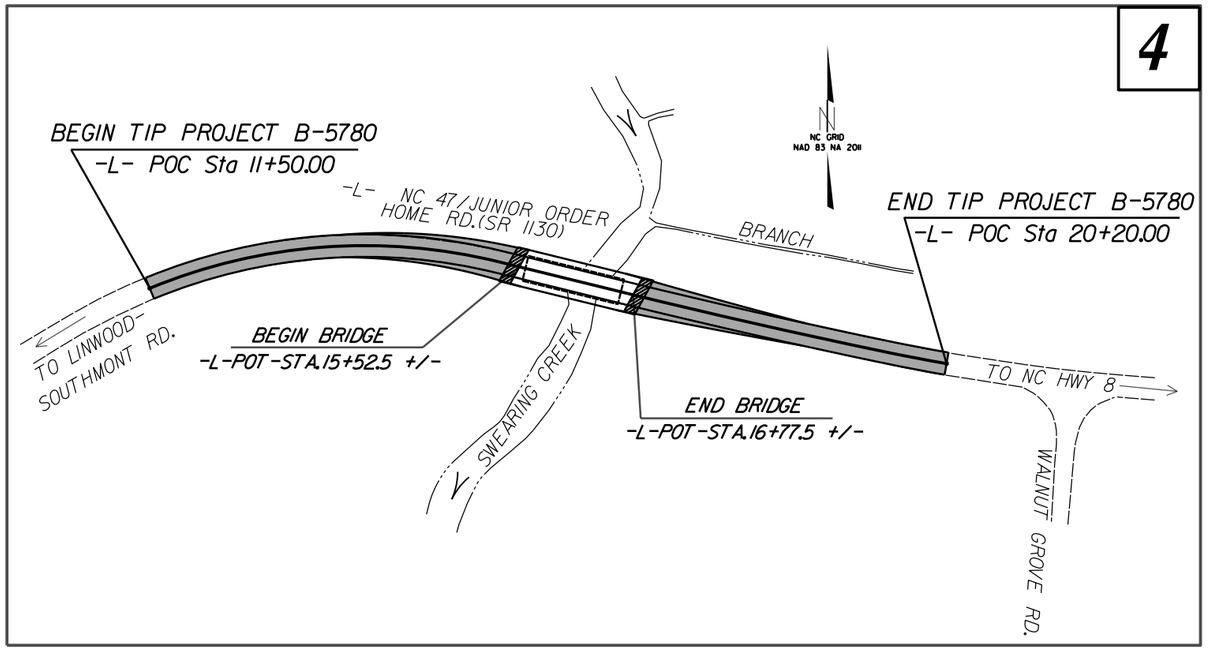

EROSION AND SEDIMENT CONTROL MEASURES

Std. #	Description	Symbol
1630.03	Temporary Silt Ditch	TSD
1630.05	Temporary Diversion	TD
1605.01	Temporary Silt Fence	
1606.01	Special Sediment Control Fence	
1622.01	Temporary Berms and Slope Drains	
1630.02	Silt Basin Type B	
1633.01	Temporary Rock Silt Check Type-A	
	Temporary Rock Silt Check Type-A with Matting and Polyacrylamide (PAM)	
1633.02	Temporary Rock Silt Check Type-B	
	Wattle / Coir Fiber Wattle	SW CFW
	Wattle / Coir Fiber Wattle with Polyacrylamide (PAM)	
1634.01	Temporary Rock Sediment Dam Type-A	
1634.02	Temporary Rock Sediment Dam Type-B	
1635.01	Rock Pipe Inlet Sediment Trap Type-A	
1635.02	Rock Pipe Inlet Sediment Trap Type-B	
1630.04	Stilling Basin	
1630.06	Special Stilling Basin	
	Rock Inlet Sediment Trap:	
1632.01	Type A	A
1632.02	Type B	B
1632.03	Type C	C
	Skimmer Basin	
	Tiered Skimmer Basin	
	Infiltration Basin	

THIS PROJECT CONTAINS EROSION CONTROL PLANS FOR CLEARING AND GRUBBING PHASE OF CONSTRUCTION.

GRAPHIC SCALE

0
PLANS

0
PROFILE (HORIZONTAL)

0
PROFILE (VERTICAL)

ROADSIDE ENVIRONMENTAL UNIT
DIVISION OF HIGHWAYS
STATE OF NORTH CAROLINA

THESE EROSION AND SEDIMENT CONTROL PLANS COMPLY WITH THE REGULATIONS SET FORTH BY THE NCG-010000 GENERAL CONSTRUCTION PERMIT EFFECTIVE AUGUST 3, 2011 ISSUED BY THE NORTH CAROLINA DEPARTMENT OF ENVIRONMENT AND NATURAL RESOURCES DIVISION OF WATER QUALITY.

Prepared In the Office of:

ROADSIDE ENVIRONMENTAL UNIT
1 South Wilmington St.
Raleigh, NC 27611

2012 STANDARD SPECIFICATIONS

Designed by:

Natalie Chan, P.E. — *NAME*
491 — *LEVEL III CERTIFICATION NO.*

Roadway Standard Drawings

The following roadway english standards as appear in "Roadway Standard Drawings"– Roadway Design Unit – N. C. Department of Transportation – Raleigh, N. C., dated January 2012 and the latest revison thereto are applicable to this project and by reference hereby are considered a part of these plans.

1604.01	Railroad Erosion Control Detail	1632.01	Rock Inlet Sediment Trap Type A
1605.01	Temporary Silt Fence	1632.02	Rock Inlet Sediment Trap Type B
1606.01	Special Sediment Control Fence	1632.03	Rock Inlet Sediment Trap Type C
1607.01	Gravel Construction Entrance	1633.01	Temporary Rock Silt Check Type A
1622.01	Temporary Berms and Slope Drains	1633.02	Temporary Rock Silt Check Type B
1630.01	Riser Basin	1634.01	Temporary Rock Sediment Dam Type A
1630.02	Silt Basin Type B	1634.02	Temporary Rock Sediment Dam Type B
1630.03	Temporary Silt Ditch	1635.01	Rock Pipe Inlet Sediment Trap Type A
1630.04	Stilling Basin	1635.02	Rock Pipe Inlet Sediment Trap Type B
1630.05	Temporary Diversion	1640.01	Coir Fiber Baffle
1630.06	Special Stilling Basin	1645.01	Temporary Stream Crossing
1631.01	Matting Installation		

1-JUL-2016 14:22
sers\nchan\AppData\Local\Temp\B-5780\B5780_ddc_tsh.dgn
AT REN(29461)

PROJECT REFERENCE NO.	SHEET NO.
B-5780	EC-2
R/W SHEET NO.	
ROADWAY DESIGN ENGINEER	HYDRAULICS ENGINEER

COIR FIBER WATTLE WITH POLYACRYLAMIDE (PAM) DETAIL

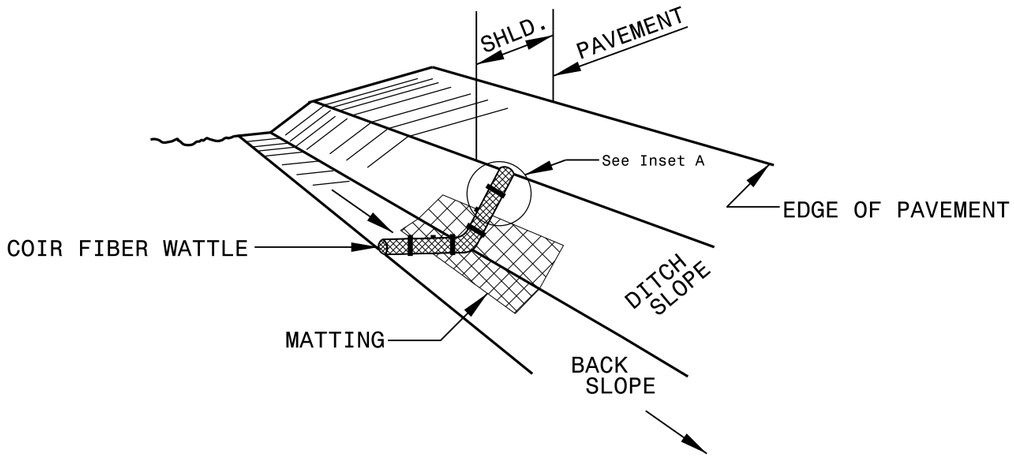

ISOMETRIC VIEW

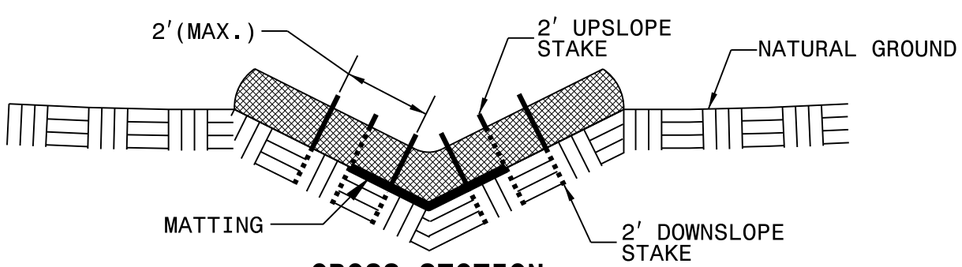

CROSS SECTION VEE DITCH

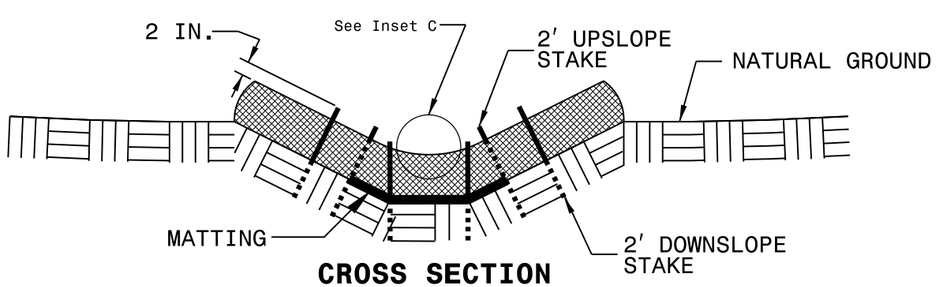

CROSS SECTION TRAPEZOIDAL DITCH

NOTES:

USE MINIMUM 12 IN. DIAMETER COIR FIBER (COCONUT FIBER) WATTLE.

USE 2 FT. WOODEN STAKES WITH A 2 IN. BY 2 IN. NOMINAL CROSS SECTION.

ONLY INSTALL WATTLE(S) TO A HEIGHT IN DITCH SO FLOW WILL NOT WASH AROUND WATTLE AND SCOUR DITCH SLOPES AND AS DIRECTED.

INSTALL A MINIMUM OF 2 UPSLOPE STAKES AND 4 DOWNSLOPE STAKES AT AN ANGLE TO WEDGE WATTLE TO BOTTOM OF DITCH.

PROVIDE STAPLES MADE OF 0.125 IN. DIAMETER STEEL WIRE FORMED INTO A U SHAPE NOT LESS THAN 12″ IN LENGTH.

INSTALL STAPLES APPROXIMATELY EVERY 1 LINEAR FOOT ON BOTH SIDES OF WATTLE AND AT EACH END TO SECURE IT TO THE SOIL.

INSTALL MATTING IN ACCORDANCE WITH SECTION 1631 OF THE STANDARD SPECIFICATIONS.

PRIOR TO POLYACRYLAMIDE (PAM) APPLICATION, OBTAIN A SOIL SAMPLE FROM PROJECT LOCATION, AND FROM OFFSITE MATERIAL, AND ANALYZE FOR APPROPRIATE PAM FLOCCULANT TO BE APPLIED TO EACH WATTLE.

INITIALLY APPLY 2 OUNCES OF ANIONIC OR NEUTRALLY CHARGED PAM OVER WATTLE WHERE WATER WILL FLOW AND 1 OUNCE OF PAM ON MATTING ON EACH SIDE OF WATTLE. REAPPLY PAM AFTER EVERY RAINFALL EVENT THAT IS EQUAL TO OR EXCEEDS 0.50 IN.

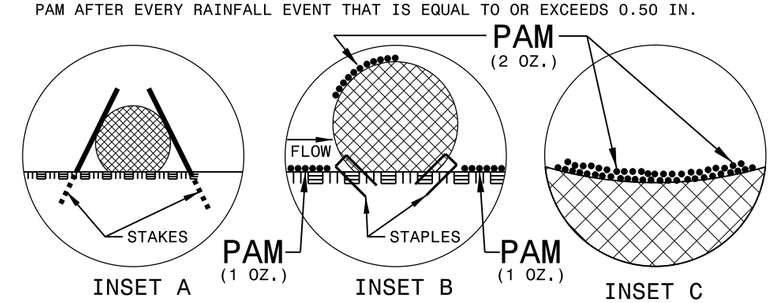

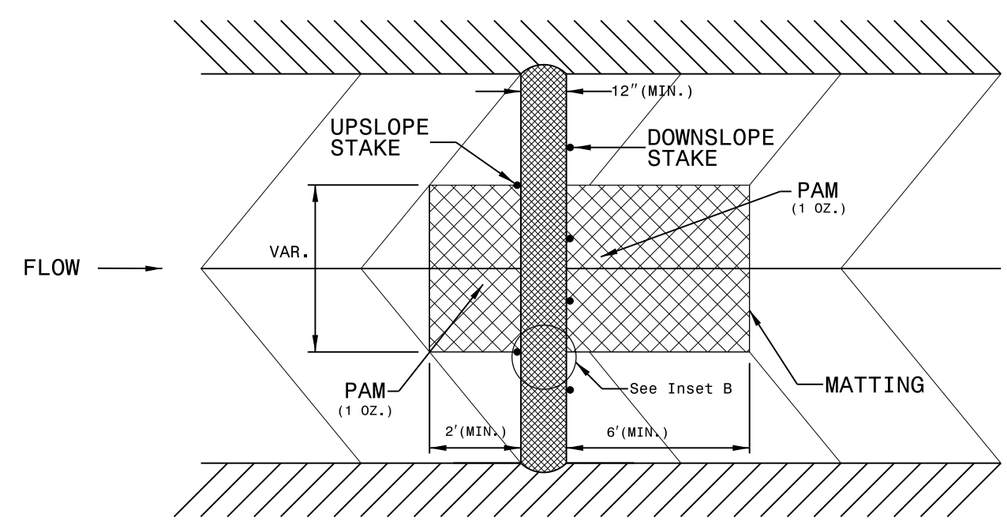

TOP VIEW

PROJECT REFERENCE NO.	SHEET NO.
B-5780	EC-2A
R/W SHEET NO.	
ROADWAY DESIGN ENGINEER	HYDRAULICS ENGINEER

SILT FENCE COIR FIBER WATTLE BREAK DETAIL

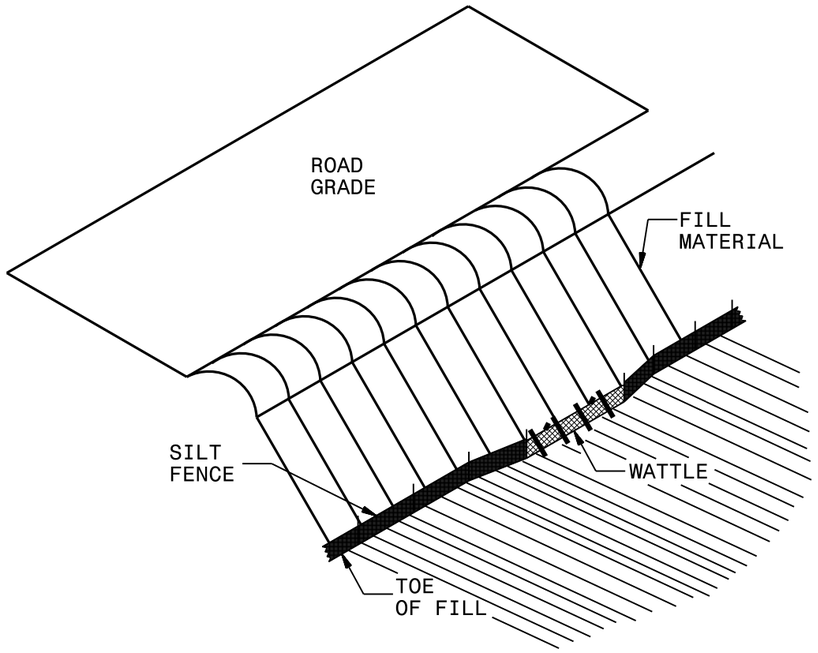

ISOMETRIC VIEW

NOTES:

USE MINIMUM 12 IN. DIAMETER COIR FIBER (COCONUT FIBER) WATTLE AND LENGTH OF 10 FT.

EXCAVATE A 1 TO 2 INCH TRENCH FOR WATTLE TO BE PLACED.

DO NOT PLACE WATTLE ON TOE OF SLOPE.

USE 2 FT. WOODEN STAKES WITH A 2 IN. BY 2 IN. NOMINAL CROSS SECTION.

INSTALL A MINIMUM OF 2 UPSLOPE STAKES AND 4 DOWNSLOPE STAKES AT AN ANGLE TO WEDGE WATTLE TO GROUND.

PROVIDE STAPLES MADE OF 0.125 IN. DIAMETER STEEL WIRE FORMED INTO A U SHAPE NOT LESS THAN 12″ IN LENGTH.

INSTALL STAPLES APPROXIMATELY EVERY 1 LINEAR FOOT ON BOTH SIDES OF WATTLE AND AT EACH END TO SECURE IT TO THE SOIL.

WATTLE INSTALLATION CAN BE ON OUTSIDE OF THE SILT FENCE AS DIRECTED.

INSTALL TEMPORARY SILT FENCE IN ACCORDANCE WITH SECTION 1605 OF THE STANDARD SPECIFICATIONS.

INSET A

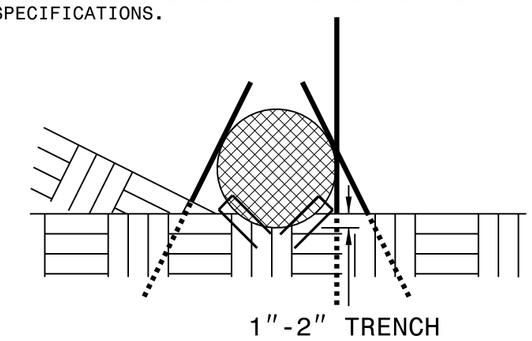

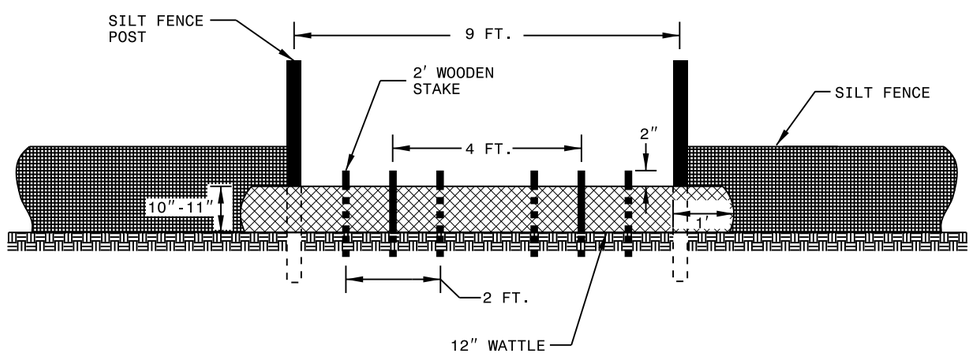

VIEW FROM SLOPE

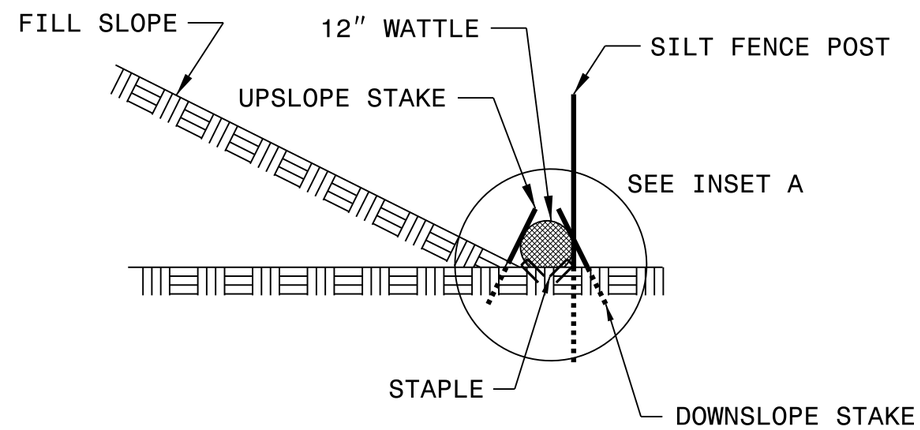

SIDE VIEW

PROJECT REFERENCE NO.	SHEET NO.
B-5780	EC-2B
R/W SHEET NO.	
ROADWAY DESIGN ENGINEER	HYDRAULICS ENGINEER

TEMPORARY ROCK SILT CHECK TYPE 'A' WITH EXCELSIOR MATTING AND POLYACRYLAMIDE (PAM)

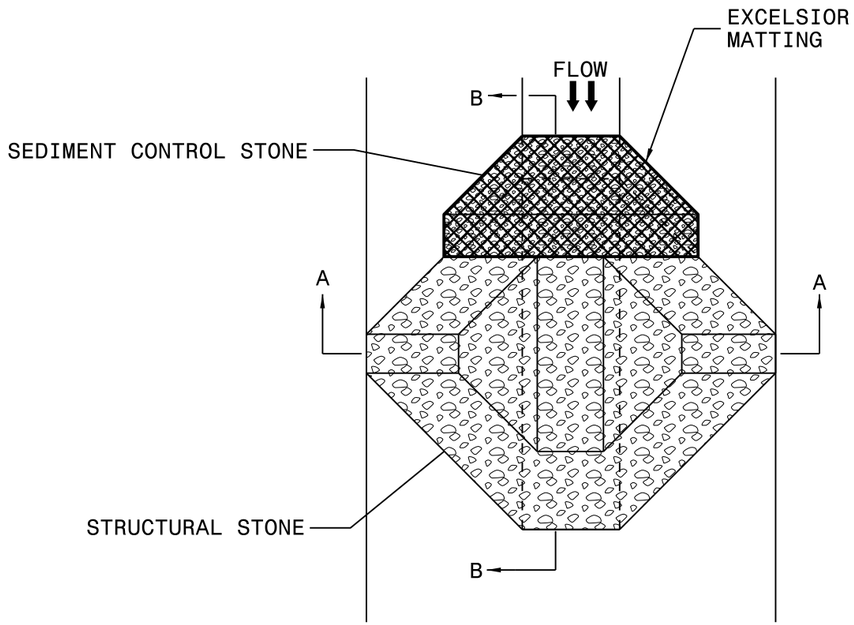

PLAN

NOTES:

INSTALL TEMPORARY ROCK SILT CHECK TYPE A IN ACCORDANCE WITH ROADWAY STANDARD DRAWING NO. 1633.01.

USE EXCELSIOR FOR MATTING MATERIAL AND ANCHOR MATTING SECTION AT TOP AND BOTTOM WITH CLASS B STONE.

PRIOR TO POLYACRYLAMIDE (PAM) APPLICATION, OBTAIN A SOIL SAMPLE FROM PROJECT LOCATION, AND FROM OFFSITE MATERIAL, AND ANALYZE FOR APPROPRIATE PAM FLOCCULANT TO BE APPLIED TO EACH ROCK SILT CHECK.

INITIALLY APPLY 4 OUNCES OF POLYACRYLAMIDE (PAM) TO TOP OF MATTING SECTION AND AFTER EVERY RAINFALL EVENT THAT EQUALS OR EXCEEDS 0.50 INCHES.

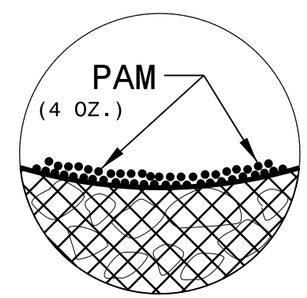

INSET A

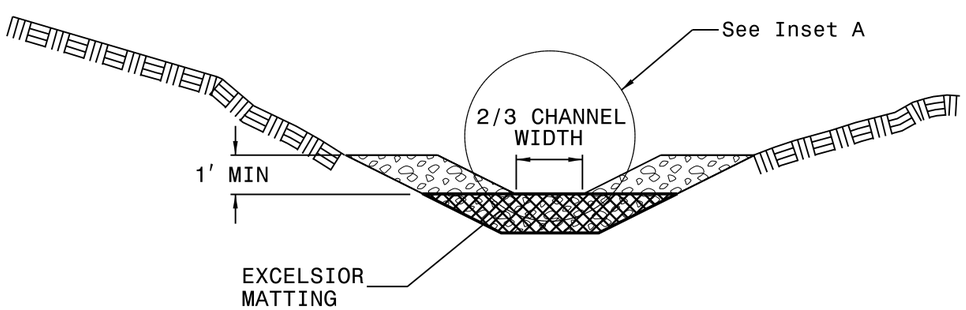

SECTION A-A

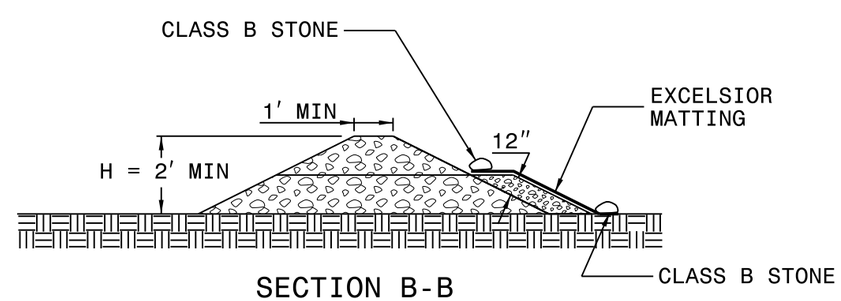

SECTION B-B

NOT TO SCALE

PROJECT REFERENCE NO.	SHEET NO.
B-5780	EC-3
ROADWAY DESIGN ENGINEER	HYDRAULICS ENGINEER

DIVISION OF HIGHWAYS
STATE OF NORTH CAROLINA

SOIL STABILIZATION SUMMARY SHEET

MATTING FOR EROSION CONTROL

CONST SHEET NO.	LINE	FROM STATION	TO STATION	SIDE	ESTIMATE (SY)
4	-L-	17+50	19+50	RT	165
			SUBTOTAL		165
MISCELLANEOUS MATTING TO BE INSTALLED AS DIRECTED BY THE ENGINEER					5300
			TOTAL		5465
				SAY	5500

PERMANENT SOIL REINFORCEMENT MAT

CONST SHEET NO.	LINE	FROM STATION	TO STATION	SIDE	ESTIMATE (SY)
4	-L-	12+00	14+00	RT	165
4	-L-	13+50	14+00	LT	45
			SUBTOTAL		210
		ADDITIONAL PSRM TO BE INSTALLED			250
				TOTAL	460
				SAY	460

PROJECT REFERENCE NO.	SHEET NO.
BB-5780	EC-3A
ROADWAY DESIGN ENGINEER	HYDRAULICS ENGINEER

DIVISION OF HIGHWAYS
STATE OF NORTH CAROLINA

SOIL STABILIZATION TIMEFRAMES

SITE DESCRIPTION	STABILIZATION TIME	TIMEFRAME EXCEPTIONS
PERIMETER DIKES, SWALES, DITCHES AND SLOPES	7 DAYS	NONE
HIGH QUALITY WATER (HQW) ZONES	7 DAYS	NONE
SLOPES STEEPER THAN 3:1	7 DAYS	IF SLOPES ARE 10' OR LESS IN LENGTH AND ARE NOT STEEPER THAN 2:1, 14 DAYS ARE ALLOWED.
SLOPES 3:1 OR FLATTER	14 DAYS	7 DAYS FOR SLOPES GREATER THAN 50' IN LENGTH.
ALL OTHER AREAS WITH SLOPES FLATTER THAN 4:1	14 DAYS	NONE, EXCEPT FOR PERIMETERS AND HQW ZONES.

PROJECT REFERENCE NO.	SHEET NO.
B-5780	EC-4/CONST.4
R/W SHEET NO.	
ROADWAY DESIGN ENGINEER	HYDRAULICS ENGINEER

-L-

PI Sta 10+70.21	PI Sta 13+42.21	PI Sta 18+28.06	PI Sta 21+03.76
Δ = 10° 12' 31.3" (RT)	Δ = 37° 14' 26.7" (RT)	Δ = 2° 19' 23.0" (LT)	Δ = 7° 44' 51.0" (LT)
D = 7° 17' 22.3"	D = 9° 32' 57.5"	D = 0° 51' 55.8"	D = 2° 44' 29.1"
L = 140.05'	L = 389.98'	L = 268.41'	L = 282.61'
T = 70.21'	T = 202.16'	T = 134.22'	T = 141.52'
R = 786.00'	R = 600.00'	R = 6,620.00'	R = 2,090.00'
SE=	SE=	SE=	SE=

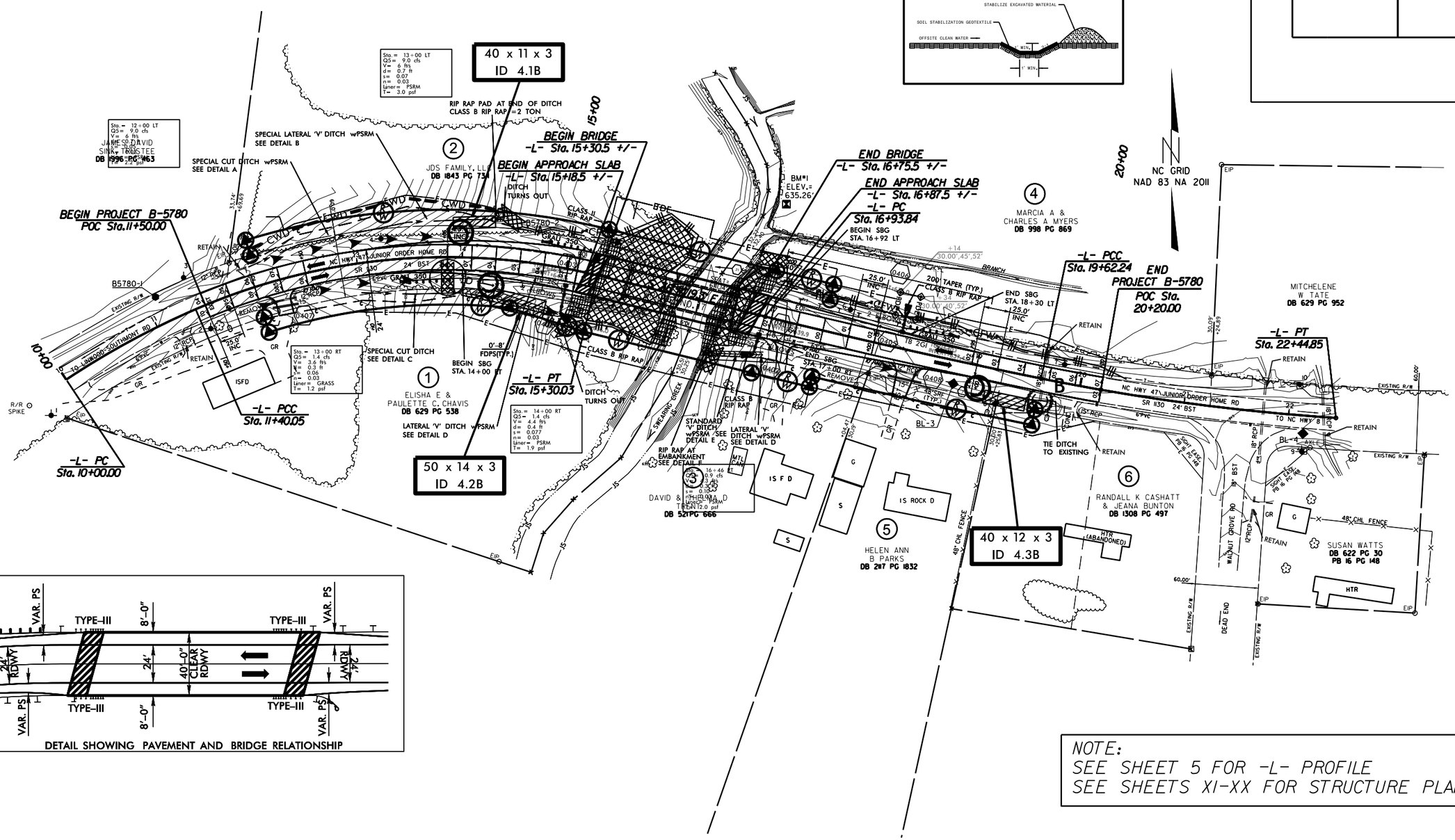

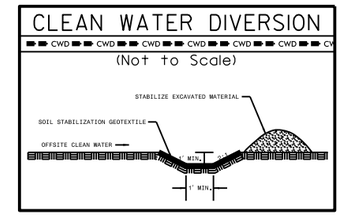

DETAIL SHOWING PAVEMENT AND BRIDGE RELATIONSHIP

NOTE:
SEE SHEET 5 FOR -L- PROFILE
SEE SHEETS XI-XX FOR STRUCTURE PLANS

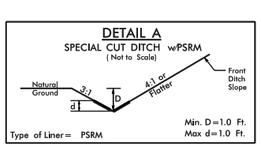

-L- Sta. 12+00 to Sta. 13+50 LT

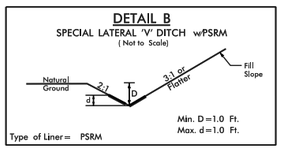

-L- Sta. 13+50 to Sta. 14+35 LT

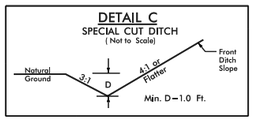

-L- Sta. 13+00 to Sta. 14+00 RT

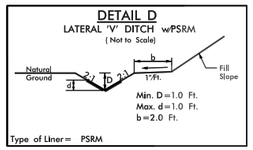

-L- Sta. 14+00 to Sta. 15+00 RT
-L- Sta. 16+85 to Sta. 17+00 RT

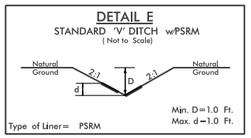

-L- Sta. 16+46 to Sta. 16+85 RT s=10% DDE=7cy

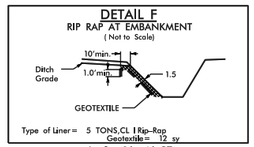

-L- Sta. 16+46 RT

8/17/99

14-JUL-2016 10:37
C:\Users\cphan\Desktop\B-5780\B5780_EC_dsn.dgn
cphan

PROJECT REFERENCE NO.	SHEET NO.
B-5780	EC-5/CONST.4
R/W SHEET NO.	
ROADWAY DESIGN ENGINEER	HYDRAULICS ENGINEER

-L-

PI Sta 10+70.21	PI Sta 13+42.21	PI Sta 18+28.06	PI Sta 21+03.76
Δ = 10° 12' 31.3" (RT)	Δ = 37° 14' 26.7" (RT)	Δ = 2° 19' 23.0" (LT)	Δ = 7° 44' 51.0" (LT)
D = 7° 17' 22.3"	D = 9° 32' 57.5"	D = 0° 51' 55.8"	D = 2° 44' 29.1"
L = 140.05'	L = 389.98'	L = 268.41'	L = 282.61'
T = 70.21'	T = 202.16'	T = 134.22'	T = 141.52'
R = 786.00'	R = 600.00'	R = 6,620.00'	R = 2,090.00'
SE=	SE=	SE=	SE=

CLEAN WATER DIVERSION

(Not to Scale)

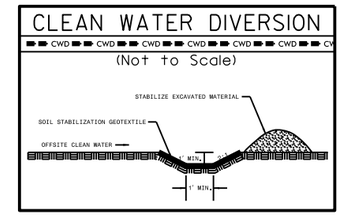

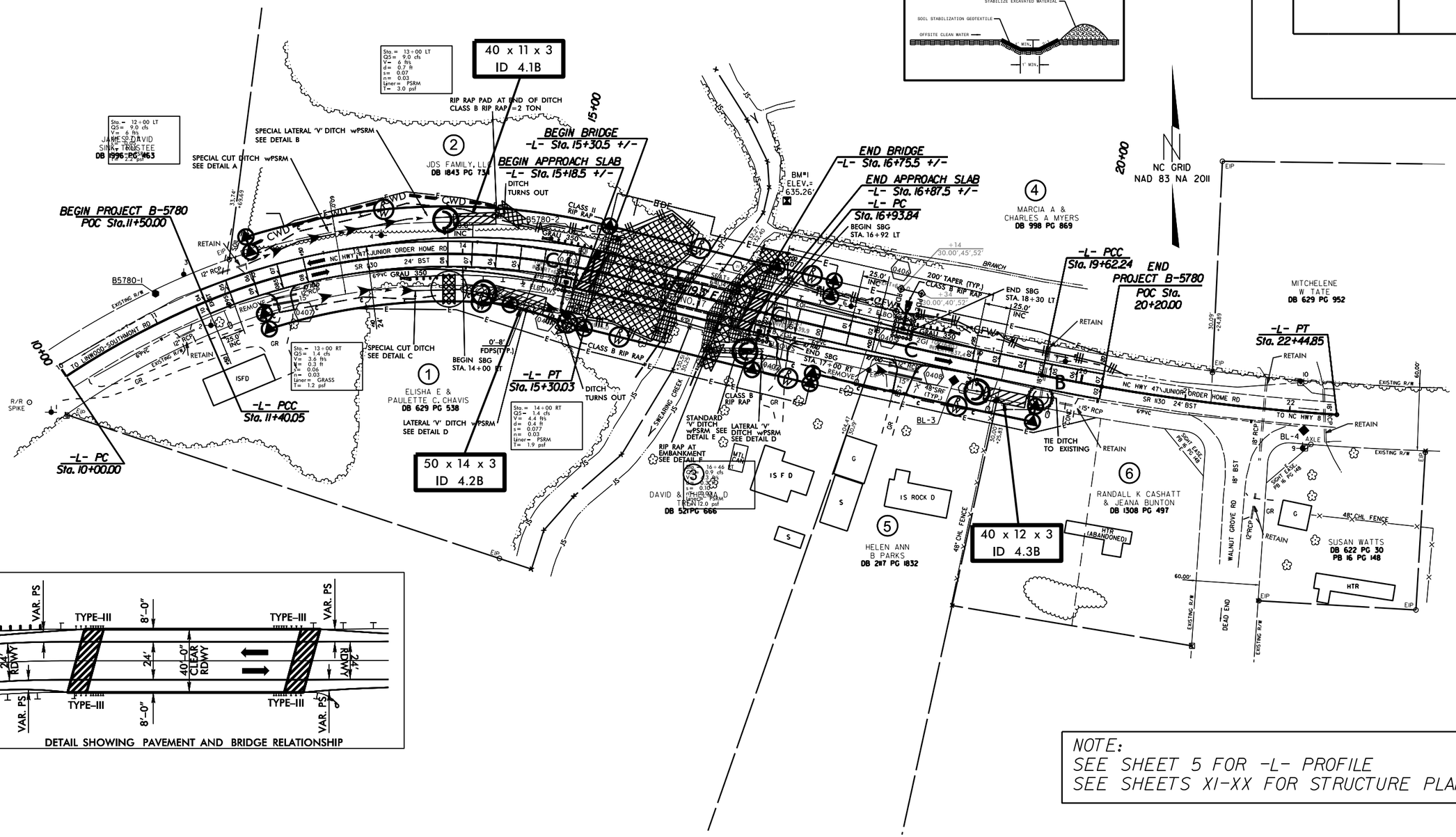

DETAIL SHOWING PAVEMENT AND BRIDGE RELATIONSHIP

NOTE:
SEE SHEET 5 FOR -L- PROFILE
SEE SHEETS XI-XX FOR STRUCTURE PLANS

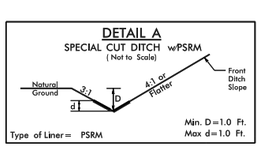

-L- Sta. 12+00 to Sta. 13+50 LT

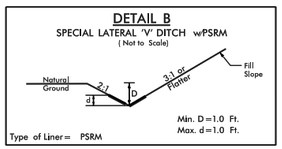

-L- Sta. 13+50 to Sta. 14+35 LT

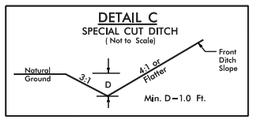

-L- Sta. 13+00 to Sta. 14+00 RT

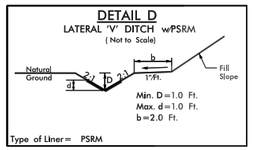

-L- Sta. 14+00 to Sta. 15+00 RT
-L- Sta. 16+85 to Sta. 17+00 RT

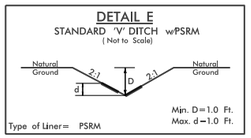

-L- Sta. 16+46 to Sta. 16+85 RT s=10% DDE=7cy

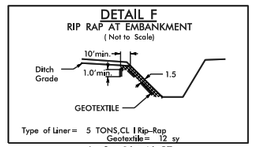

-L- Sta. 16+46 RT

8/17/99
14-JUL-2016 10:38
C:\Users\cphan\Desktop\B-5780\B5780_EC_dsn.dgn
cphan

09/08/99

TIP PROJECT: B-5780

T.I.P. NO.	SHEET NO.
B-5780	UO-1

NOTE:
ALL UTILITY WORK SHOWN ON THIS SHEET IS DONE BY OTHERS.
NO PAYMENT WILL BE MADE TO THE CONTRACTOR FOR UTILITY WORK SHOWN ON THIS SHEET.

STATE OF NORTH CAROLINA
DIVISION OF HIGHWAYS

UTILITIES BY OTHERS PLANS
DAVIDSON

LOCATION: REPLACE EXISTING BRIDGE NO. 17 OVER SWEARING CREEK ON NC 47 (JUNIOR ORDER HOME RD.)

TYPE OF WORK: GRADING, DRAINAGE, PAVING, AND STRUCTURE

PRELIMINARY PLANS
DO NOT USE FOR CONSTRUCTION

GRAPHIC SCALES

50 25 0 50 100
PLANS

50 25 0 50 100
PROFILE (HORIZONTAL)

10 5 0 10 20
PROFILE (VERTICAL)

INDEX OF SHEETS

SHEET NO.:	DESCRIPTION:
UO-1	TITLE SHEET
UO-4	UBO PLAN SHEETS

UTILITY OWNERS WITH CONFLICTS

(A) POWER - CITY OF LEXINGTON - JEFF JONES
(B) TELEPHONE - WINDSTREAM - ROBERT SMITH
(C) CABLE TELEVISION - TIME WARNER - ERIC VIVOID
(D) WATER - DAVIDSON WATER - ROBERT WALTERS

PREPARED IN THE OFFICE OF:

XXXX	UTILITY PROJECT MANAGER
XXXX	PROJECT UTILITY COORDINATOR
XXXX	PROJECT UTILITY XXXX

DIVISION OF HIGHWAYS
DIVISION 9
DIVISION OFFICE ADDRESS:
375 SILAS CREEK PKWY
WINSON-SALEM, NC 27127

DAVID TRANTHAM	DIVISION CONTACT #1
AL BLANTON	DIVISION CONTACT #2
XXXX	DIVISION CONTACT #3
XXXX	DIVISION CONTACT #4

05-OCT-2016 15:37
S:\DDC\2015-04-B5780-Jr-Order-Home Rd\Utilities\UBO\B5780_ddc_UBO.dgn
$$$$USERNAME$$$$

PROJECT REFERENCE NO.	SHEET NO.
B-5780	UB1-3

UTILITIES BY OTHERS

NOTE:
ALL PROPOSED UTILITY WORK SHOWN ON THIS SHEET WILL BE DONE BY OTHERS. NO PAYMENT WILL BE MADE TO THE CONTRACTOR FOR PROPOSED UTILITY WORK SHOWN ON THIS SHEET.

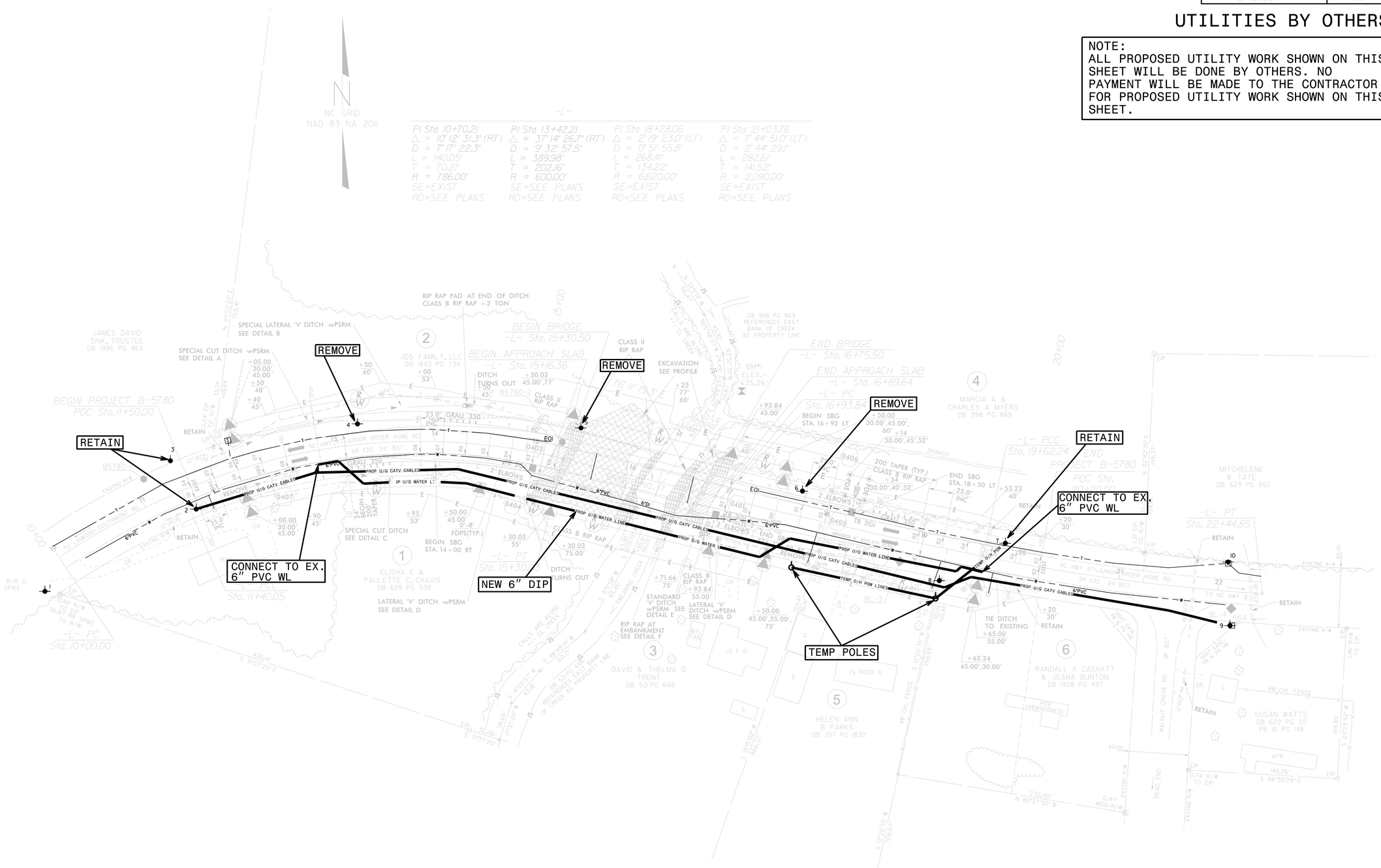

5/14/99
05-OCT-2016 15:41
B-5780_UB1_Order Home Rd\Utilities\UBO\B5780_ddc_UBO.dgn
$$$$USERNAME$$$$
-04-B5780

8/23/99

0 2.5 5	PROJ. REFERENCE NO.	SHEET NO.
	B-5780	X-1

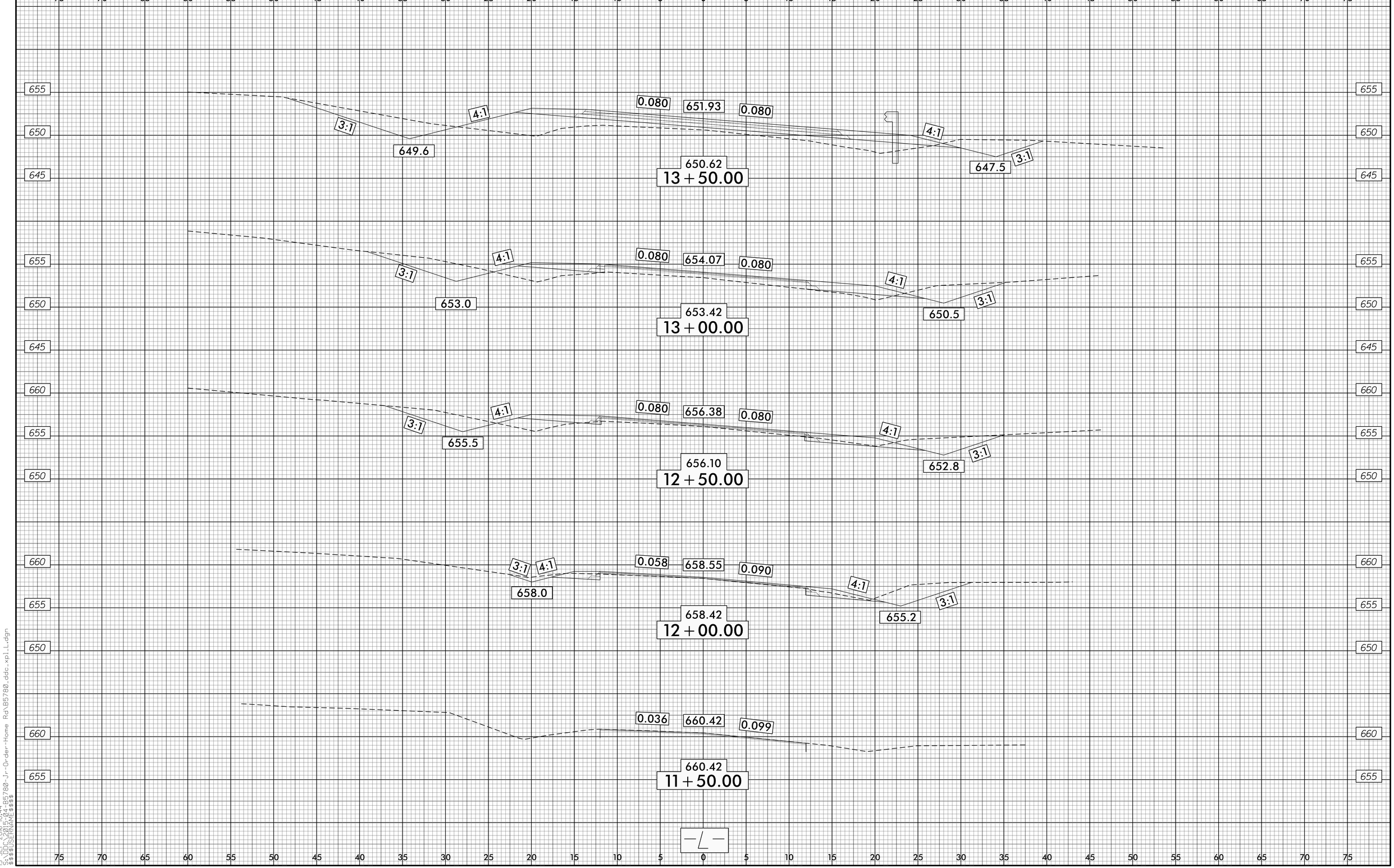

E:\SEP-206 (0:44
B5780_PROFILE.dgn
$$$$USERNAME$$$$
B5780_Jr-Order-Home Rd\B5780_ddc_xplL.dgn

0 2.5 5	PROJ. REFERENCE NO.	SHEET NO.
	B-5780	X-2

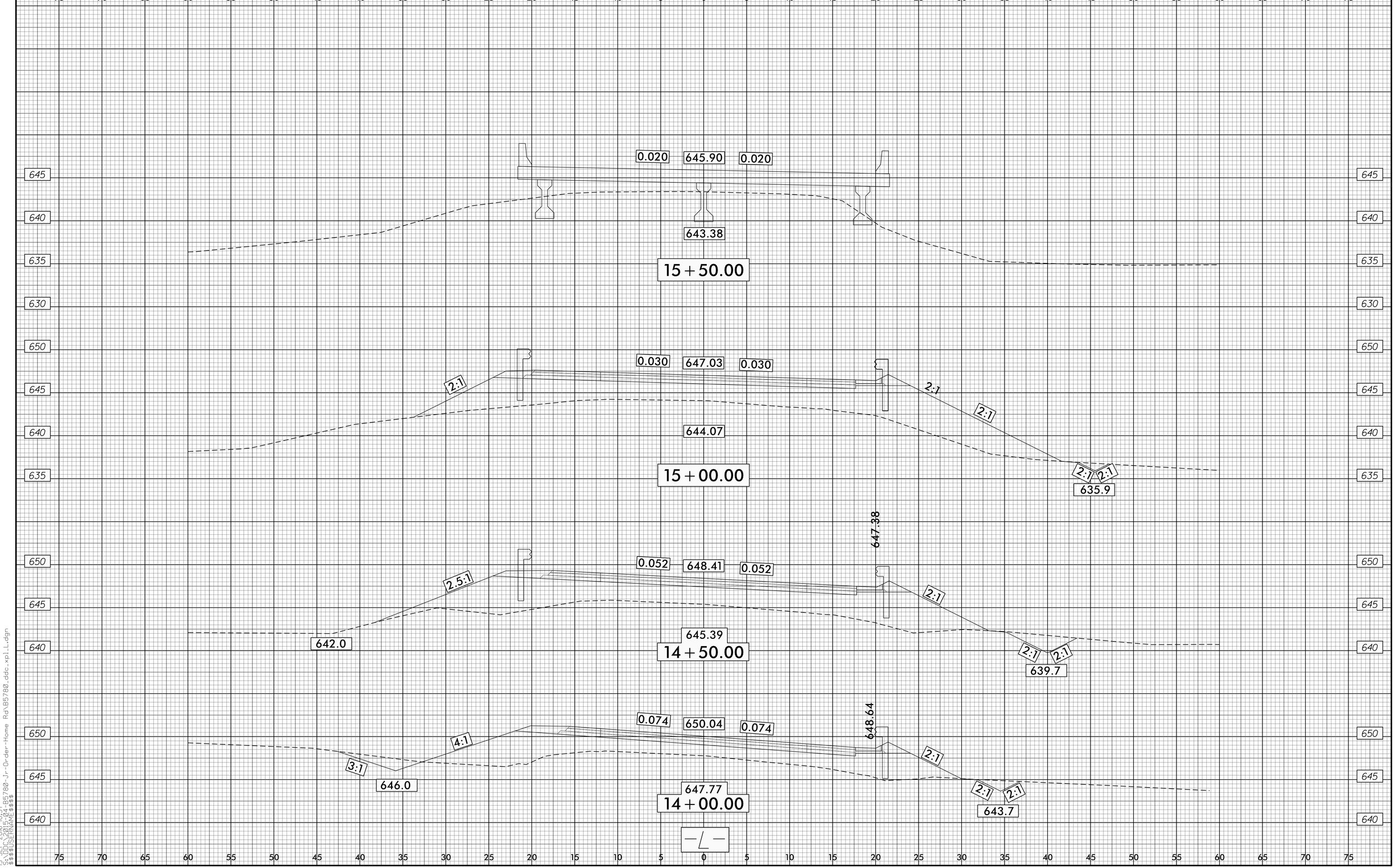

8/23/99

15-SEP-2016 10:37
pw:\\Pw-pw1\Projects\B5780_Jr-Order-Home Rd\B5780_ddc_xpl_L.dgn
$$$$USERNAME$$$$

8/23/99

0 2.5 5	PROJ. REFERENCE NO.	SHEET NO.
	B-5780	X-3

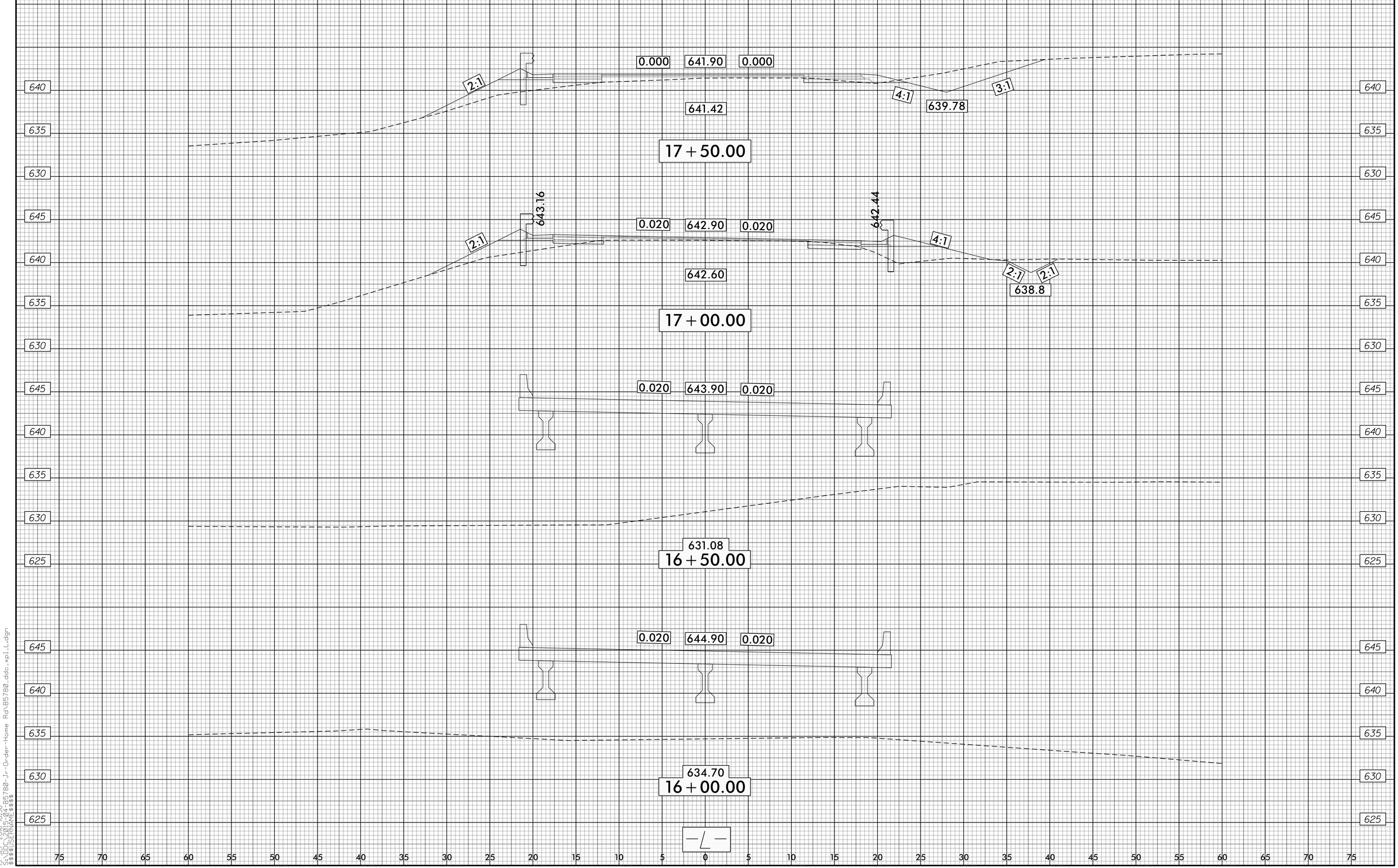

E:\SEP-206 (258
5-SEP-2006 10:28
$$$$USERNAME$$$$
B5780-Jr-Order-Home Rd\B5780_ddc_xpl_L.dgn

0 2.5 5	PROJ. REFERENCE NO.	SHEET NO.
	B-5780	X-4

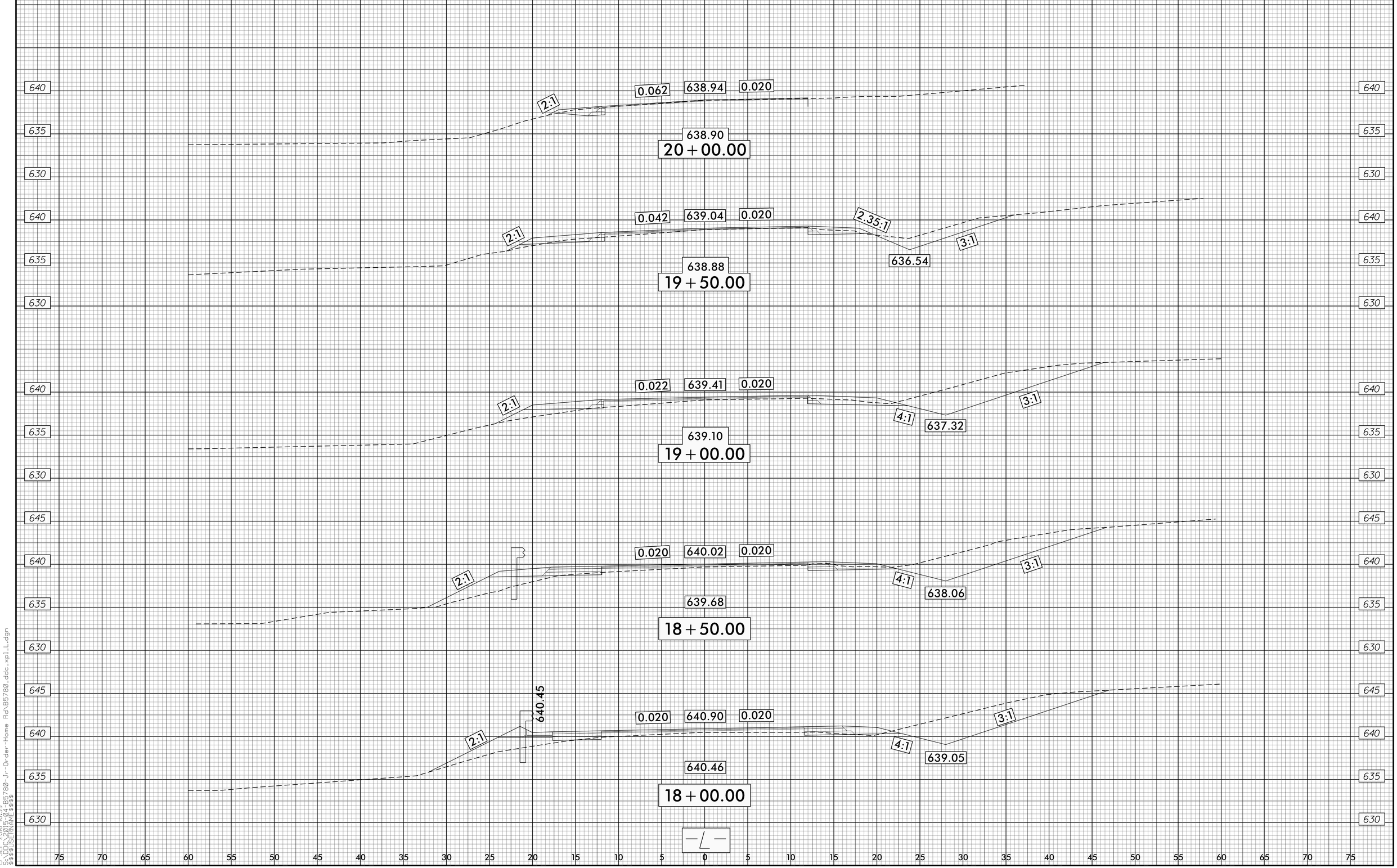

8/23/99

15-SEP-2016 10:59
C:\PROJECTS\B5780-Jr-Order-Home Rd\B5780_dds_xpl_L.dgn
$$$$USERNAME$$$$

TIP PROJECT: B-5780

CONTRACT: DI00141

STATE OF NORTH CAROLINA
DIVISION OF HIGHWAYS

DAVIDSON COUNTY

STATE	STATE PROJECT REFERENCE NO.	SHEET NO.	TOTAL SHEETS
N.C.	B-5780		

STATE PROJ. NO.	F. A. PROJ. NO.	DESCRIPTION
45736.1.1	N/A	PE
45736.2.1	N/A	RW/UTILS
45736.3.1	N/A	CONST

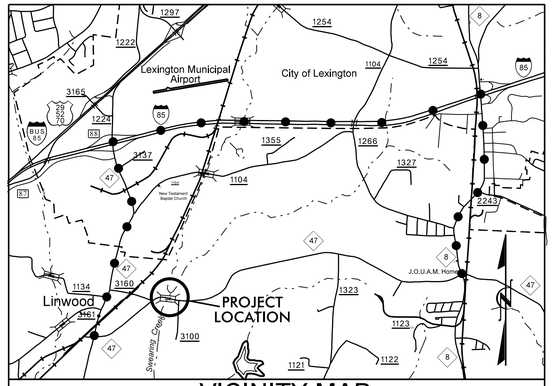

VICINITY MAP

DETOUR ROUTE

LOCATION: REPLACE EXISTING BRIDGE NO. 17 OVER SWEARING CREEK ON NC 47 (JUNIOR ORDER HOME RD.)

TYPE OF WORK: GRADING, DRAINAGE, PAVING AND STRUCTURE

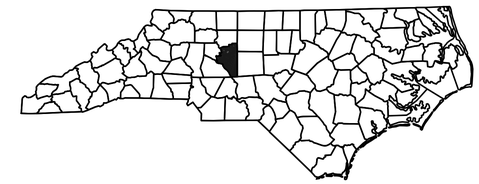

NC GRID
NAD 83 NA 2011

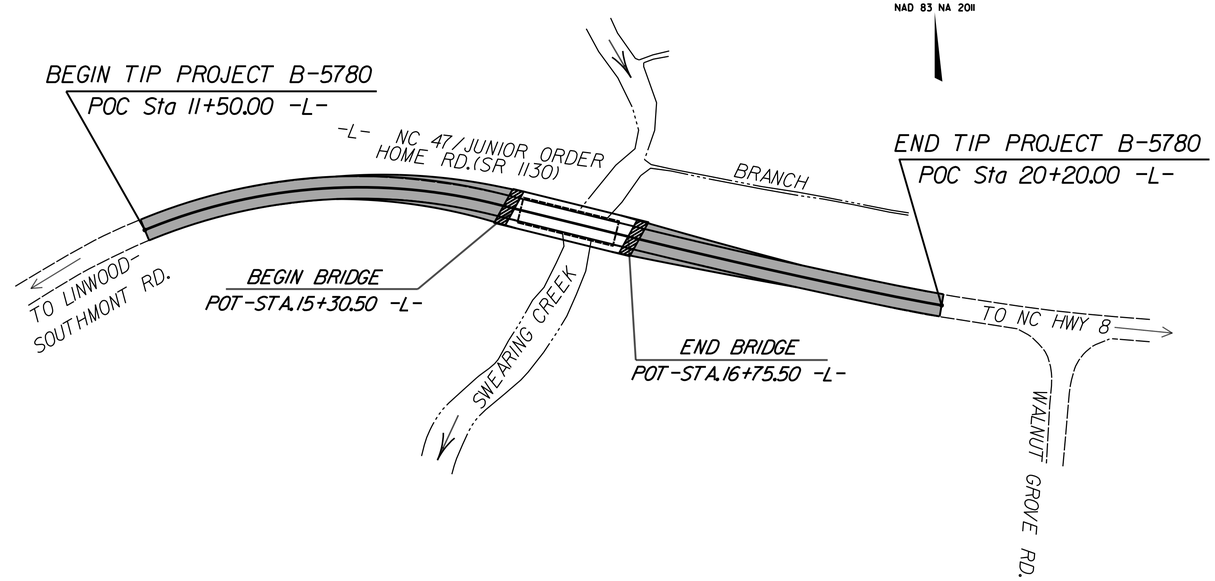

STRUCTURE

STATE OF NORTH CAROLINA DEPARTMENT OF TRANSPORTATION

DESIGN DATA

ADT 2016 = 2600
ADT 2036 = 4200
DHV = X %
D = 50 %
T = 10 % *
V = 45 MPH**

* 4% TTST + 6% DUALS

FUNC CLASS =
MAJOR-COLLECTOR
REGIONAL TIER

**DESIGN EXCEPTION

PROJECT LENGTH

LENGTH ROADWAY TIP PROJECT B-5780 = 0.137 MILE
LENGTH STRUCTURE TIP PROJECT B-5780 = 0.028 MILE
TOTAL LENGTH TIP PROJECT B-5780 = 0.165 MILE

Prepared In the Office of:
DIVISION OF HIGHWAYS
STRUCTURES MANAGEMENT UNIT
1000 BIRCH RIDGE DR.
RALEIGH, N.C. 27610

2012 STANDARD SPECIFICATIONS

LETTING DATE :
DECEMBER 20, 2016

E. E. MURRAY, PE
PROJECT ENGINEER

V. A. PATEL, PE
PROJECT DESIGN ENGINEER

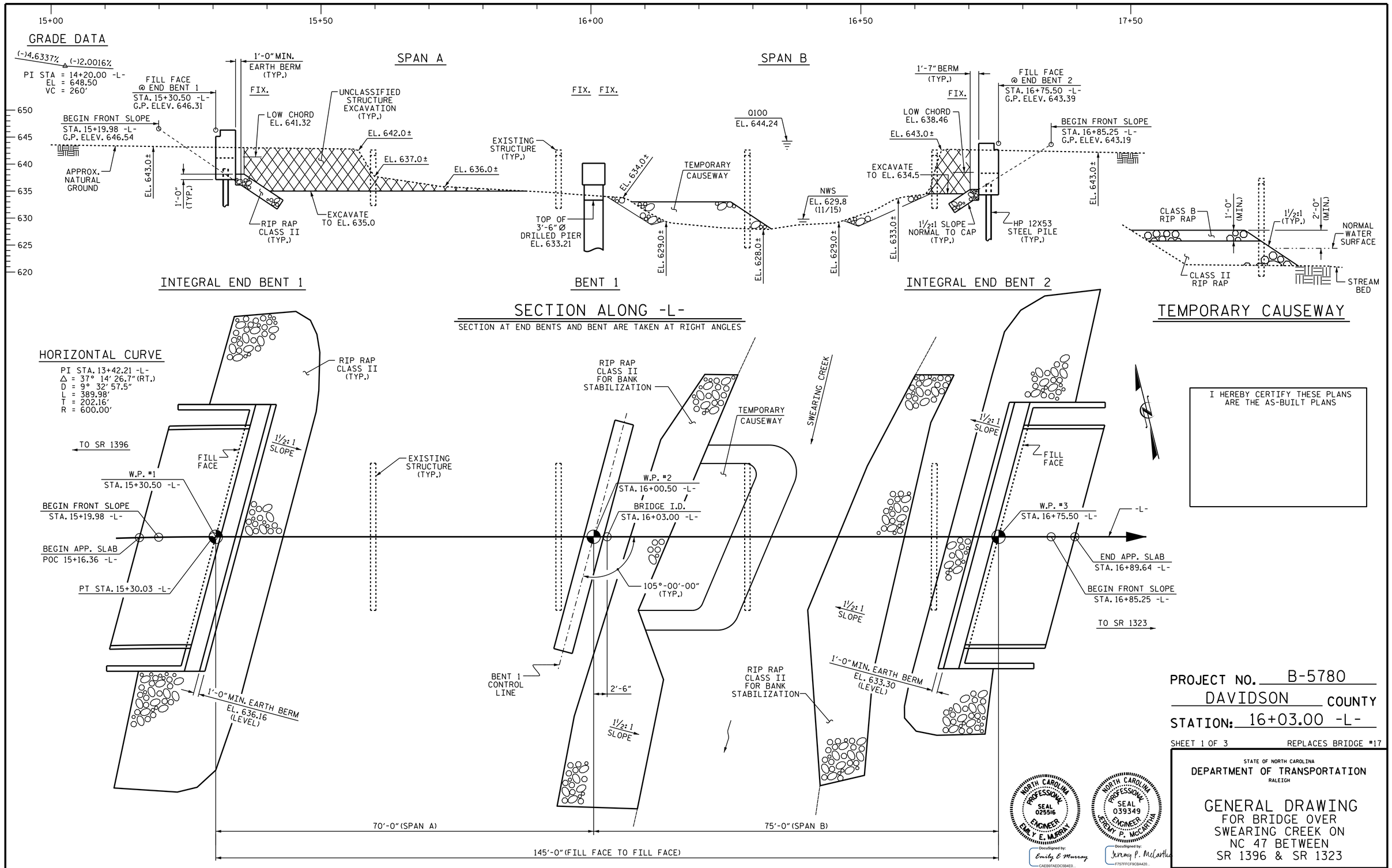

I HEREBY CERTIFY THESE PLANS ARE THE AS-BUILT PLANS

PROJECT NO. B-5780
DAVIDSON COUNTY
STATION: 16+03.00 -L-

SHEET 1 OF 3 REPLACES BRIDGE #17

NORTH CAROLINA PROFESSIONAL SEAL 025516 ENGINEER EMILY E. MURRAY
DocuSigned by: Emily E Murray
CAE8B7AEDC5B4E0...
8/23/2016

NORTH CAROLINA PROFESSIONAL SEAL 039349 ENGINEER JEREMY P. McCARTHA
DocuSigned by: Jeremy P. McCartha
F757FFCF9CBA420...
8/23/2016

STATE OF NORTH CAROLINA
DEPARTMENT OF TRANSPORTATION
RALEIGH

GENERAL DRAWING
FOR BRIDGE OVER
SWEARING CREEK ON
NC 47 BETWEEN
SR 1396 & SR 1323

REVISIONS							
NO.	BY:	DATE:	NO.	BY:	DATE:	SHEET NO.	
1			3			S-1	
2			4			TOTAL SHEETS	
						28	

DOCUMENT NOT CONSIDERED FINAL UNLESS ALL SIGNATURES COMPLETED

DRAWN BY :	M.K. BEARD	DATE :	5/31/16
CHECKED BY :	V.A. PATEL	DATE :	6/20/16
DESIGN ENGINEER OF RECORD:	J.P. McCARTHA	DATE :	7/28/16

22-AUG-2016 10:08
R:\Structures\Plans\B5780_SMU_GD_01.dgn
jdhawk

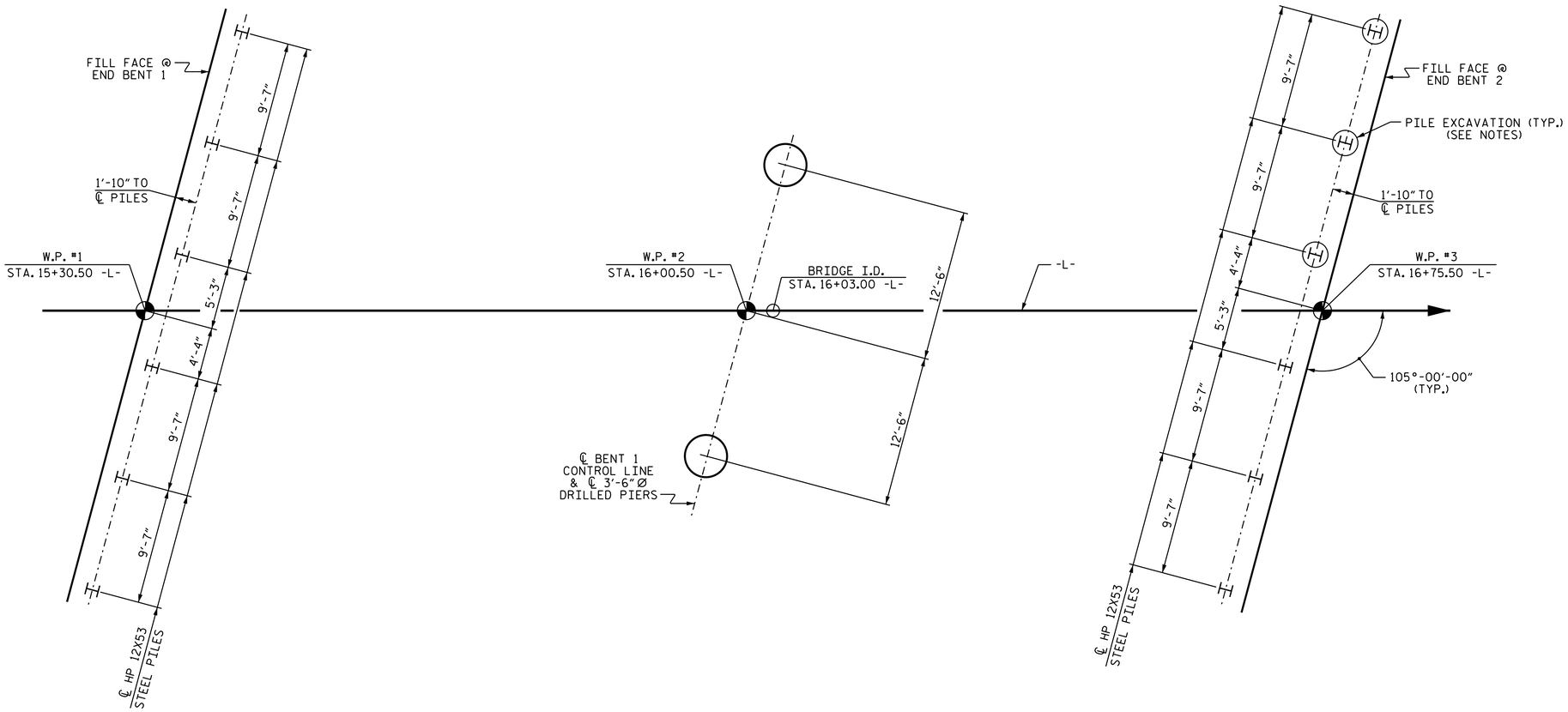

FOUNDATION LAYOUT

(DIMENSIONS LOCATING END BENT PILES AND BENT DRILLED PIERS ARE SHOWN TO CENTERLINE PILES AND DRILLED PIERS.)

NOTES

FOR PILES, SEE GEOTECHNICAL SPECIAL PROVISIONS AND SECTION 450 OF THE STANDARD SPECIFICATIONS.

PILES AT END BENT 1 AND END BENT 2 ARE DESIGNED FOR A FACTORED RESISTANCE OF 120 TONS PER PILE.

DRIVE PILES AT END BENT 1 AND END BENT 2 TO A REQUIRED DRIVING RESISTANCE OF 200 TONS PER PILE.

PILE EXCAVATION IS REQUIRED TO INSTALL THE LEFT THREE PILES AT END BENT 2. EXCAVATE HOLES AT PILE LOCATIONS TO 624.0, 623.0 AND 622.0 RESPECTIVELY. FOR PILE EXCAVATION, SEE SECTION 450 OF THE STANDARD SPECIFICATIONS.

CONCRETE IS REQUIRED TO FILL HOLES FOR PILE EXCAVATION AT END BENT 2.

TESTING PILES WITH THE PDA DURING DRIVING, RE-STRIKING OR RE-DRIVING MAY BE ROUIRED. THE ENGINEER WILL DETERMINE THE NEED FOR PDA TESTING. FOR PDA TESTING, SEE SECTION 450 OF THE STANDARD SPECIFICATIONS.

FOR DRILLED PERS, SEE GEOTECHNICAL SPECIAL PROVISIONS AND SECTION 411 OF THE STANDARD SPECIFICATIONS.

DRILLED PIERS AT BENT 1 ARE DESIGNED FOR A FACTORED RESISTANCE OF 590 TONS PER PIER. CHECK FIELD CONDITIONS FOR THE REQUIRED TIP RESISTANCE OF 300 TONS PER SQUARE FOOT.

PERMANENT STEEL CASINGS MAY BE REQUIRED FOR DRILLED PIERS AT BENT 1. IF REQUIRED, DO NOT EXTEND PERMANENT CASINGS BELOW ELEVATION 615.0. WITHOUT PRIOR APPROVAL FROM THE ENGINEER. THE ENGINEER WILL DETERMINE THE NEED FOR PERMANENT CASINGS.

INSTALL DRILLED PIERS AT BENT 1 TO A TIP ELEVATION NO HIGHER THAN 597.0 (LT); 601.0 (RT) WITH THE REQUIRED TIP RESISTANCE AND PENETRATION OF AT LEAST 5.0 (LT) AND 7.0 (RT) INTO ROCK AS DEFINED BY ARTICLE 411-1 OF THE STANDARD SPECIFICATIONS.

THE SCOUR CRITICAL ELEVATION FOR BENT 1 IS 616.0. THE SCOUR CRITICAL ELEVATIONS ARE USED TO MONITOR POSSIBLE SCOUR PROBLEMS DURING THE LIFE OF THE STRUCTURE.

CSL TUBES ARE REQUIRED AND CSL TESTING MAY BE REQUIRED FOR THE DRILLED PIERS. THE ENGINEER WILL DETERMINE THE NEED FOR CSL TESTING. FOR CSL TESTING, SEE SECTION 411 OF THE STANDARD SPECIFICATIONS.

PROJECT NO. B-5780
DAVIDSON COUNTY
STATION: 16+03.00 -L-

SHEET 2 OF 3

NORTH CAROLINA PROFESSIONAL SEAL 039349 ENGINEER JEREMY P. McCARTHA

DocuSigned by: Jeremy P. McCartha
F757FFCF9CBA420...
8/23/2016

STATE OF NORTH CAROLINA
DEPARTMENT OF TRANSPORTATION
RALEIGH

GENERAL DRAWING
FOR BRIDGE OVER SWEARING CREEK ON NC 47 BETWEEN SR 1396 & SR 1323

DOCUMENT NOT CONSIDERED FINAL UNLESS ALL SIGNATURES COMPLETED

REVISIONS						SHEET NO.
NO.	BY:	DATE:	NO.	BY:	DATE:	S-2
1			3			TOTAL SHEETS
2			4			28

DRAWN BY :	M.K. BEARD	DATE :	5/31/16
CHECKED BY :	V.A. PATEL	DATE :	6/20/16
DESIGN ENGINEER OF RECORD:	J.P. McCARTHA	DATE :	7/28/16

22-AUG-2016 10:08
R:\Structures\Plans\B5780_SMU_GD_01.dgn
jchawk

BM #1: R/R SPIKE SET IN WEST SIDE OF 12" ELM, 108' LEFT OF -BL- STA. 16+88.0, ELEV. 635.26

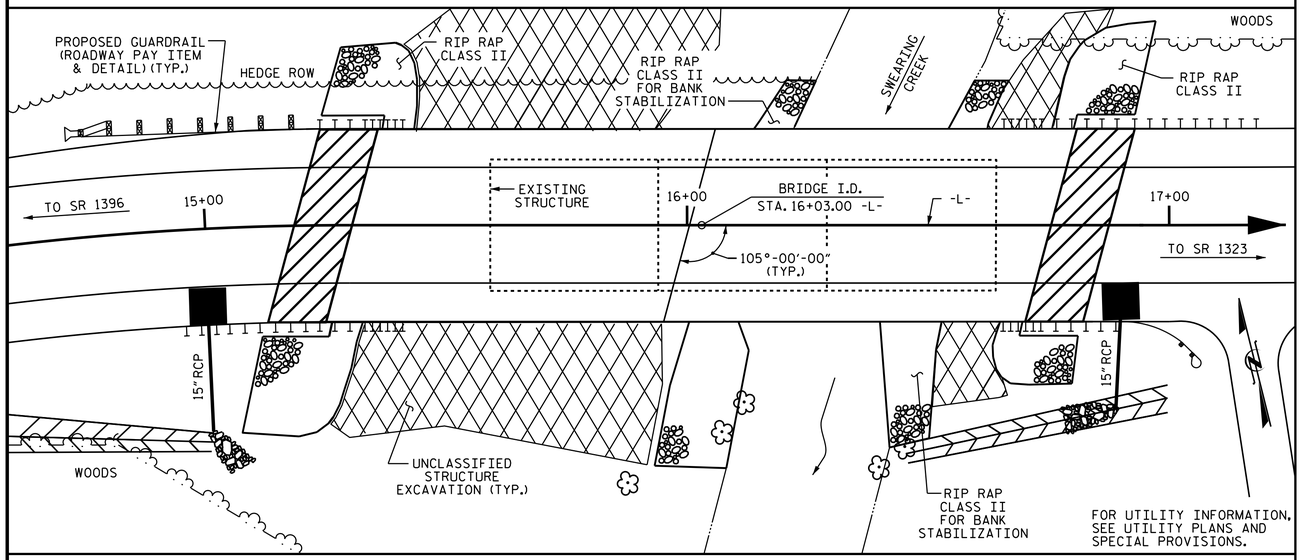

LOCATION SKETCH

NOTES

ASSUMED LIVE LOAD = HL-93 OR ALTERNATE LOADING.

THIS BRIDGE HAS BEEN DESIGNED IN ACCORDANCE WITH THE AASHTO LRFD BRIDGE DESIGN SPECIFICATIONS.

THIS BRIDGE IS LOCATED IN SEISMIC ZONE 1.

FOR OTHER DESIGN DATA AND GENERAL NOTES, SEE SHEET SN.

FOR SUBMITTAL OF WORKING DRAWINGS, SEE SPECIAL PROVISIONS.

FOR FALSEWORK AND FORMWORK, SEE SPECIAL PROVISIONS.

FOR CRANE SAFETY, SEE SPECIAL PROVISIONS.

FOR GROUT FOR STRUCTURES, SEE SPECIAL PROVISIONS.

FOR PLACING LOAD ON STRUCTURE MEMBERS, SEE SPECIAL PROVISIONS.

REMOVABLE FORMS MAY BE USED IN LIEU OF METAL STAY-IN-PLACE FORMS IN ACCORDANCE WITH ARTICLE 420-3 OF THE STANDARD SPECIFICATIONS.

AT THE CONTRACTOR'S OPTION, AND UPON REMOVAL OF THE CAUSEWAY, THE CLASS II RIP RAP USED IN THE CAUSEWAY MAY BE PLACED AS RIP RAP SLOPE PROTECTION. SEE SPECIAL PROVISIONS FOR CONSTRUCTION, MAINTENANCE AND REMOVAL OF TEMPORARY ACCESS AT STA. 16+03.00 -L-.

NEEDLE BEAMS WILL NOT BE ALLOWED UNLESS OTHERWISE CALLED FOR ON THE PLANS OR APPROVED BY THE ENGINEER.

INASMUCH AS THE PAINT SYSTEM ON THE EXISTING STRUCTURAL STEEL CONTAINS LEAD, THE CONTRACTOR'S ATTENTION IS DIRECTED TO ARTICLE 107-1 OF THE STANDARD SPECIFICATIONS. ANY COSTS RESULTING FROM COMPLIANCE WITH APPLICABLE STATE OR FEDERAL REGULATIONS PERTAINING TO HANDLING OF MATERIALS CONTAINING LEAD BASED PAINT SHALL BE INCLUDED IN THE BID PRICE FOR "REMOVAL OF EXISTING STRUCTURE AT STA. 16+03.00 -L-."

THE CLASS AA CONCRETE IN THE BRIDGE DECK SHALL CONTAIN FLY ASH OR GROUND GRANULATED BLAST FURNACE SLAG AT THE SUBSTITUTION RATE SPECIFIED IN ARTICLE 1024-1 AND IN ACCORDANCE WITH ARTICLES 1024-5 AND 1024-6 OF THE STANDARD SPECIFICATIONS. NO PAYMENT WILL BE MADE FOR THIS SUBSTITUTION AS IT IS CONSIDERED INCIDENTAL TO THE COST OF THE REINFORCED CONCRETE DECK SLAB.

THE MATERIAL SHOWN IN THE CROSS-HATCHED AREA SHALL BE EXCAVATED FOR A DISTANCE OF 70.0' AT LEFT SIDE AND 50.0' AT RIGHT SIDE OF CENTERLINE ROADWAY AT END BENT 1 AND 50.0' EACH SIDE OF CENTERLINE ROADWAY AT END BENT 2 AS DIRECTED BY THE ENGINEER. THIS WORK WILL BE PAID FOR AT THE CONTRACT LUMP SUM PRICE FOR UNCLASSIFIED STRUCTURE EXCAVATION. SEE SECTION 412 OF THE STANDARD SPECIFICATIONS.

THE EXISTING STRUCTURE CONSISTING OF 3 SPANS (1 @ 35.3', 1 @ 35.0' AND 1 @ 35.3') WITH STEEL PLANK DECK ON I-BEAMS WITH A CLEAR ROADWAY WIDTH OF 28.0'. THE END BENTS CONSIST OF TIMBER CAP, TIMBER PILES AND TIMBER BULKHEADS AND THE BENTS CONSIST OF TIMBER CAP AND TIMBER PILES LOCATED AT THE PROPOSED STRUCTURE SHALL BE REMOVED. THE EXISTING BRIDGE IS PRESENTLY POSTED FOR LOAD LIMIT. SHOULD THE STRUCTURAL INTEGRITY OF THE BRIDGE DETERIORATE DURING CONSTRUCTION OF THE PROPOSED BRIDGE, A LOAD LIMIT MAY BE POSTED AND MAY BE REDUCED AS FOUND NECESSARY DURING THE LIFE OF THE PROJECT.

THE SUBSTRUCTURE OF THE EXISTING BRIDGE INDICATED ON THE PLANS IS FROM THE BEST INFORMATION AVAILABLE. SINCE THIS INFORMATION IS SHOWN FOR THE CONVENIENCE OF THE CONTRACTOR, THE CONTRACTOR SHALL HAVE NO CLAIM WHATSOEVER AGAINST THE DEPARTMENT OF TRANSPORTATION FOR ANY DELAYS OR ADDITIONAL COST INCURRED BASED ON DIFFERENCES BETWEEN THE EXISTING BRIDGE SUBSTRUCTURE SHOWN ON THE PLANS AND THE ACTUAL CONDITIONS AT THE PROJECT SITE.

REMOVAL OF THE EXISTING BRIDGE SHALL BE PERFORMED IN A MANNER THAT PREVENTS DEBRIS FROM FALLING INTO THE WATER. THE CONTRACTOR SHALL SUBMIT DEMOLITION PLANS FOR REVIEW AND REMOVE THE BRIDGE IN ACCORDANCE WITH ARTICLE 402-2 OF THE STANDARD SPECIFICATIONS.

THIS STRUCTURE HAS BEEN DESIGNED IN ACCORDANCE WITH "HEC 18-EVALUATING SCOUR AT BRIDGES."

FOR EROSION CONTROL MEASURES, SEE EROSION CONTROL PLANS.

FOR ASBESTOS ASSESSMENT FOR BRIDGE DEMOLITION AND RENOVATION ACTIVITIES, SEE SPECIAL PROVISIONS.

TOTAL BILL OF MATERIAL

	CONSTRUCTION, MAINTENANCE & REMOVAL OF TEMP. ACCESS	REMOVAL OF EXISTING STRUCTURE	PILE EXCAVATION IN SOIL	PILE EXCAVATION NOT IN SOIL	3'-6" Ø DRILLED PIERS IN SOIL	3'-6" Ø DRILLED PIERS NOT IN SOIL	PERMANENT STEEL CASING FOR 3'-6" Ø DRILLED PIER	PDA TESTING	CSL TESTING	UNCLASSIFIED STRUCTURE EXCAVATION	REINFORCED CONCRETE DECK SLAB	GROOVING BRIDGE FLOORS
	LUMP SUM	LUMP SUM	LIN. FT.	LIN. FT.	LIN. FT.	LIN. FT.	LIN. FT.	EACH	EACH	LUMP SUM	SQ. FT.	SQ. FT.
SUPERSTRUCTURE											6,271	6,334
END BENT 1												
BENT 1					44	25	38		1			
END BENT 2			20	15								
TOTAL	LUMP SUM	LUMP SUM	20	15	44	25	38	1	1	LUMP SUM	6,271	6,334

	CLASS A CONCRETE	BRIDGE APPROACH SLABS	REINFORCING STEEL	SPIRAL COLUMN REINFORCING STEEL	45" PRESTRESSED CONCRETE GIRDER		HP 12x53 STEEL PILES		CONCRETE BARRIER RAIL	RIP RAP CLASS II (2'-0" THICK)	GEOTEXTILE FOR DRAINAGE	ELASTOMERIC BEARINGS	ASBESTOS ASSESSMENT
	CU. YDS.	LUMP SUM	LBS.	LBS.	NO.	LIN. FT.	NO.	LIN. FT.	LIN. FT.	TON	SQ. YDS.	LUMP SUM	LUMP SUM
SUPERSTRUCTURE					10	708.54			286.55			LUMP SUM	
END BENT 1	39.8		4,993				6	120		240	265		
BENT 1	34.0		9,634	1,627									
END BENT 2	38.7		4,899				6	90		215	240		
TOTAL	112.5	LUMP SUM	19,526	1,627	10	708.54	12	210	286.55	455	505	LUMP SUM	LUMP SUM

HYDRAULIC DATA

DESIGN DISCHARGE = 6,000 C.F.S.
FREQUENCY OF DESIGN FLOOD = 50 YRS.
DESIGN HIGH WATER ELEVATION = 643.5
DRAINAGE AREA = 35.1 SQ. MI.
BASE DISCHARGE(Q100) = 6,900 C.F.S.
BASE HIGH WATER ELEVATION = 644.24

OVERTOPPING DATA

OVERTOPPING DISCHARGE = 5,100 C.F.S.
FREQUENCY OF OVERTOPPING FLOOD = 25 YRS.
OVERTOPPING FLOOD ELEVATION = 642.3

PROJECT NO. B-5780
DAVIDSON COUNTY
STATION: 16+03.00 -L-

SHEET 3 OF 3

NORTH CAROLINA PROFESSIONAL SEAL 039349 ENGINEER JEREMY P. McCARTHA

DocuSigned by: Jeremy P. McCartha
F757FFCF9CBA420...
8/23/2016

STATE OF NORTH CAROLINA
DEPARTMENT OF TRANSPORTATION
RALEIGH

GENERAL DRAWING
FOR BRIDGE OVER SWEARING CREEK ON NC 47 BETWEEN SR 1396 & SR 1323

DRAWN BY : M.K. BEARD DATE : 5/31/16
CHECKED BY : V.A. PATEL DATE : 6/20/16
DESIGN ENGINEER OF RECORD: J.P. McCARTHA DATE : 7/28/16

DOCUMENT NOT CONSIDERED FINAL UNLESS ALL SIGNATURES COMPLETED

REVISIONS						SHEET NO.
NO.	BY:	DATE:	NO.	BY:	DATE:	S-3
1			3			TOTAL SHEETS
2			4			28

22-AUG-2016 10:08
R:\Structures\Plans\B5780_SMU_GD_01.dgn
jdhawk

LOAD AND RESISTANCE FACTOR RATING (LRFD) SUMMARY FOR PRESTRESSED CONCRETE GIRDERS

LEVEL		VEHICLE	WEIGHT (W) (TONS)	CONTROLLING LOAD RATING	MINIMUM RATING FACTORS (RF)	TONS = W X RF	STRENGTH I LIMIT STATE											SERVICE III LIMIT STATE						COMMENT NUMBER
								MOMENT					SHEAR						MOMENT					
							LIVELOAD FACTORS	DISTRIBUTION FACTORS (DF)	RATING FACTOR	SPAN	GIRDER LOCATION	DISTANCE FROM LEFT END OF SPAN (ft)	DISTRIBUTION FACTORS (DF)	RATING FACTOR	SPAN	GIRDER LOCATION	DISTANCE FROM LEFT END OF SPAN (ft)	LIVELOAD FACTORS	DISTRIBUTION FACTORS (DF)	RATING FACTOR	SPAN	GIRDER LOCATION	DISTANCE FROM LEFT END OF SPAN (ft)	
DESIGN LOAD RATING		HL-93(Inv)	N/A	(1)	**1.02**	--	1.75	0.789	1.44	A	EL	33.516	0.943	2.06	A	I	33.516	0.80	0.943	**1.02**	B	I	36.017	
		HL-93(Opr)	N/A	--	1.87	--	1.35	0.789	1.87	A	EL	33.516	0.943	2.66	A	I	33.516	N/A	--	--	--	--	--	
		HS-20(Inv)	36.000	(2)	**1.32**	47.522	1.75	0.789	1.86	A	EL	33.516	0.943	2.35	A	I	33.516	0.80	0.771	**1.32**	A	I	33.516	
		HS-20(Opr)	36.000	--	2.42	86.972	1.35	0.789	2.42	A	EL	33.516	0.943	3.05	A	I	33.516	N/A	--	--	--	--	--	
LEGAL LOAD RATING	SV	SNSH	13.500	--	2.93	39.553	1.40	0.789	5.17	A	EL	33.516	0.943	6.14	A	I	33.516	0.80	0.771	2.93	A	I	33.516	
		SNGARBS2	20.000	--	2.21	44.091	1.40	0.789	3.89	A	EL	33.516	0.943	4.62	A	I	33.516	0.80	0.771	2.20	A	I	33.516	
		SNAGRIS2	22.000	--	2.10	46.128	1.40	0.789	3.70	A	EL	33.516	0.943	4.39	A	I	33.516	0.80	0.771	2.10	A	I	33.516	
		SNCOTTS3	27.250	--	1.46	39.747	1.40	0.789	2.57	A	EL	33.516	0.943	3.09	A	I	33.516	0.80	0.771	1.46	A	I	33.516	
		SNAGGRS4	34.925	--	1.23	42.853	1.40	0.789	2.17	A	EL	33.516	0.943	2.75	A	I	33.516	0.80	0.771	1.23	A	I	33.516	
		SNS5A	35.550	--	1.20	42.636	1.40	0.789	2.12	A	EL	33.516	0.943	2.89	A	I	33.516	0.80	0.771	1.20	A	I	33.516	
		SNS6A	39.950	--	1.10	44.096	1.40	0.789	1.95	A	EL	33.516	0.943	2.72	A	I	33.516	0.80	0.771	1.10	A	I	33.516	
		SNS7B	42.000	--	1.05	44.153	1.40	0.789	1.86	A	EL	33.516	0.943	2.80	A	I	33.516	0.80	0.771	1.05	A	I	33.516	
	TTST	TNAGRIT3	33.000	--	1.35	44.451	1.40	0.789	2.38	A	EL	33.516	0.943	3.17	A	I	33.516	0.80	0.771	1.35	A	I	33.516	
		TNT4A	33.075	--	1.35	44.780	1.40	0.789	2.39	A	EL	33.516	0.943	3.00	A	I	33.516	0.80	0.771	1.35	A	I	33.516	
		TNT6A	41.600	--	1.11	46.186	1.40	0.789	1.96	A	EL	33.516	0.943	3.24	A	I	33.516	0.80	0.771	1.11	A	I	33.516	
		TNT7A	42.000	--	1.12	46.937	1.40	0.789	1.97	A	EL	33.516	0.943	3.05	A	I	33.516	0.80	0.771	1.12	A	I	33.516	
		TNT7B	42.000	--	1.16	48.740	1.40	0.789	2.05	A	EL	33.516	0.943	2.64	A	I	33.516	0.80	0.771	1.16	A	I	33.516	
		TNAGRIT4	43.000	--	1.10	47.331	1.40	0.789	1.94	A	EL	33.516	0.943	2.53	A	I	33.516	0.80	0.771	1.10	A	I	33.516	
		TNAGT5A	45.000	--	1.04	46.636	1.40	0.789	1.83	A	EL	33.516	0.943	2.65	A	I	33.516	0.80	0.771	1.04	A	I	33.516	
		TNAGT5B	45.000	(3)	**1.02**	46.012	1.40	0.789	1.80	A	EL	33.516	0.943	2.39	A	I	33.516	0.80	0.771	**1.02**	A	I	33.516	

LOAD FACTORS

DESIGN LOAD RATING FACTORS	LIMIT STATE	γ_{DC}	γ_{DW}
	STRENGTH I	1.25	1.50
	SERVICE III	1.00	1.00

NOTES

MINIMUM RATING FACTORS ARE BASED ON THE STRENGTH I AND SERVICE III LIMIT STATES.

ALLOWABLE STRESSES FOR SERVICE III LIMIT STATE ARE AS REQUIRED FOR DESIGN.

(#) CONTROLLING LOAD RATING

(1) DESIGN LOAD RATING (HL-93)

(2) DESIGN LOAD RATING (HS-20)

(3) LEGAL LOAD RATING **

** SEE CHART FOR VEHICLE TYPE

GIRDER LOCATION

I - INTERIOR GIRDER
EL - EXTERIOR LEFT GIRDER
ER - EXTERIOR RIGHT GIRDER

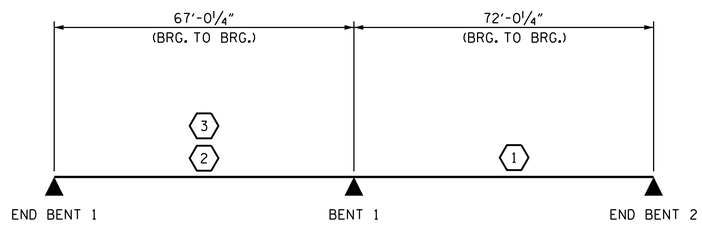

LRFR SUMMARY

PROJECT NO. B-5780
DAVIDSON COUNTY
STATION: 16+03.00 -L-

NORTH CAROLINA PROFESSIONAL SEAL 039349 ENGINEER JEREMY P. McCARTHA

DocuSigned by: Jeremy P. McCartha
F757FFCF9CBA420...
8/23/2016

DOCUMENT NOT CONSIDERED FINAL UNLESS ALL SIGNATURES COMPLETED

STATE OF NORTH CAROLINA
DEPARTMENT OF TRANSPORTATION
RALEIGH

STANDARD
LRFR SUMMARY FOR PRESTRESSED CONCRETE GIRDERS
(NON-INTERSTATE TRAFFIC)

REVISIONS						SHEET NO.
NO.	BY:	DATE:	NO.	BY:	DATE:	S-4
1			3			TOTAL SHEETS
2			4			28

STD. NO. LRFR1

ASSEMBLED BY : J. P. MCCARTHA DATE : 3/31/16
CHECKED BY : H.A. LOCKLEAR DATE : 5/01/16
DRAWN BY : MAA 1/08
CHECKED BY : GM/DI 2/08
REV. 11/12/08 RR MAA/GM
REV. 10/1/11 MAA/GM
DESIGN ENGINEER OF RECORD:
J.P. MCCARTHA DATE : 7/28/16

22-AUG-2016 10:08
R:\Structures\Plans\B5780_SMU_LRFR_01.dgn
jdhawk

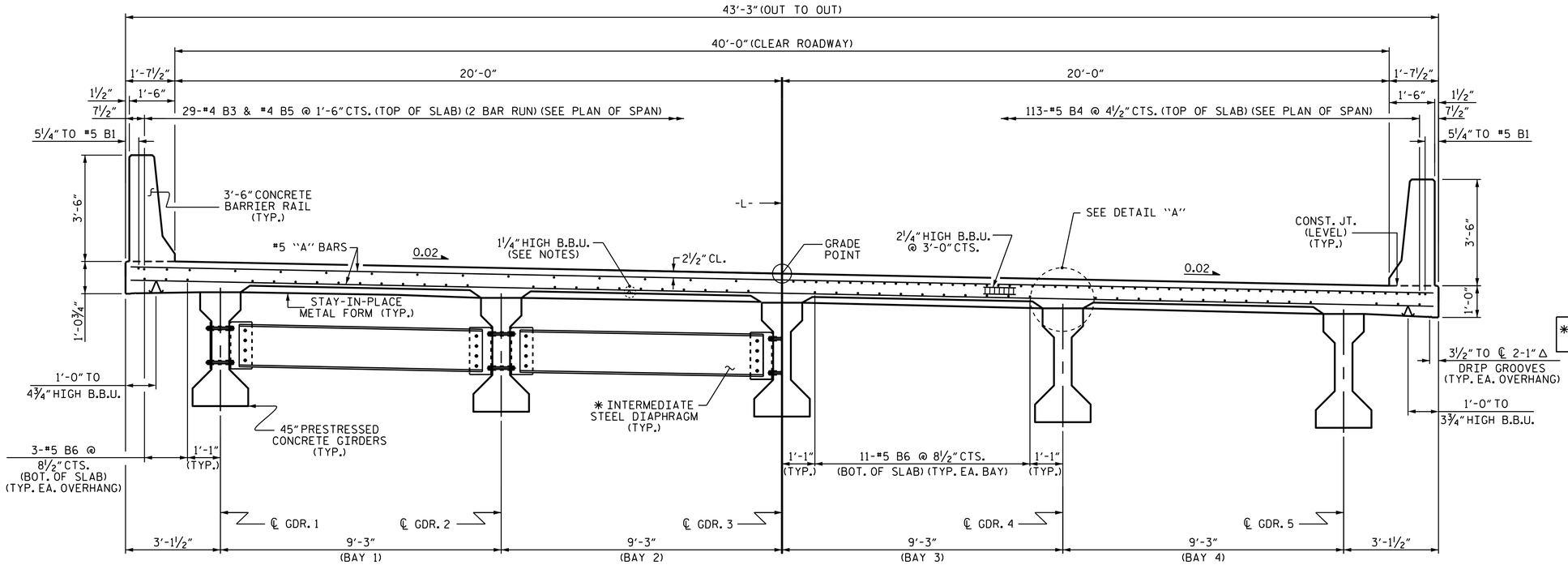

TYPICAL SECTION

(SHOWING INTERMEDIATE DIAPHRAGMS)

TYPICAL SECTION

(SHOWING LINK SLAB AT BENT)

NOTES

PROVIDE 1¼" HIGH BEAM BOLSTERS UPPER AT 4'-0" CTS. ATOP THE METAL STAY-IN-PLACE FORMS TO SUPPORT THE BOTTOM MAT OF "A" BARS. WHEN USING REMOVABLE FORMS, PROVIDE CONTINUOUS HIGH CHAIRS FOR METAL DECK (C.H.C.M.) @ 4'-0" CTS. WITH A HEIGHT TO SUPPORT THE BOTTOM MAT OF "A" BARS A CLEAR DISTANCE OF 2½" ABOVE THE TOP OF THE REMOVABLE FORM.

LONGITUDINAL STEEL MAY BE SHIFTED SLIGHTLY, AS NECESSARY, TO AVOID INTERFERENCE WITH STIRRUPS IN PRESTRESSED CONCRETE GIRDERS.

PREVIOUSLY CAST CONCRETE IN A CONTINUOUS UNIT SHALL HAVE ATTAINED A MINIMUM COMPRESSIVE STRENGTH OF 3,000 PSI BEFORE ADDITIONAL CONCRETE IS CAST IN THE UNIT.

BARRIER RAIL IN A CONTINUOUS UNIT SHALL NOT BE CAST UNTIL ALL SLAB CONCRETE IN THE UNIT HAS BEEN CAST AND HAS REACHED A MINIMUM COMPRESSIVE STRENGTH OF 3,000 PSI.

✱ FOR INTERMEDIATE STEEL DIAPHRAGM DETAILS, SEE "INTERMEDIATE STEEL DIAPHRAGMS FOR TYPE III PRESTRESSED CONCRETE GIRDERS" SHEET.

✱✱ NO WELDING OF FORMS OR FALSEWORK TO THE TOP OF GIRDER WILL BE PERMITTED IN THE LINK SLAB AREA.

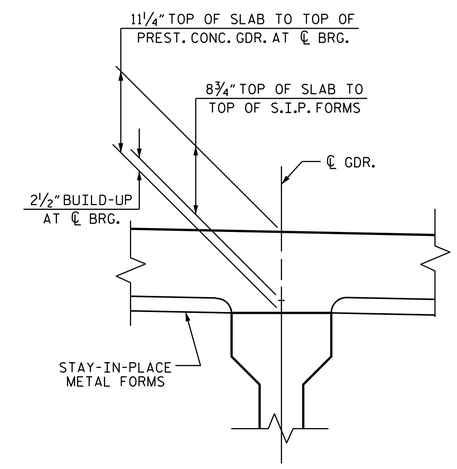

DETAIL "A"

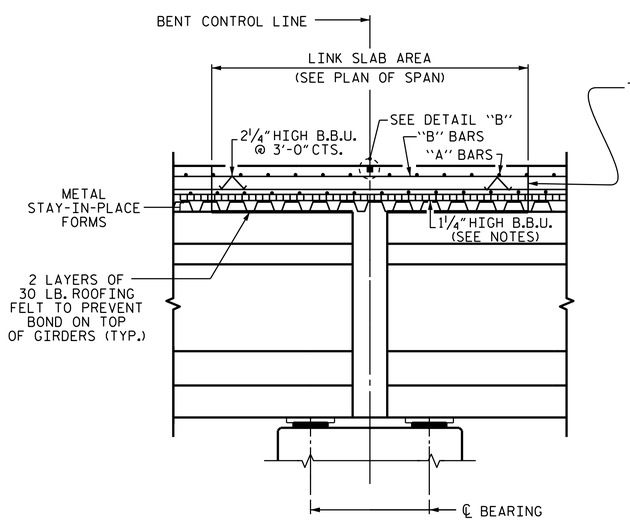

SECTION THROUGH BENT

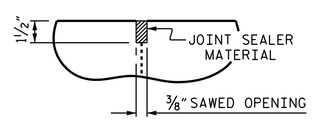

DETAIL "B"

A 1½" DEEP CONTRACTION JOINT AT BENT CONTROL LINE SHALL BE SAWN WITHIN 24 HOURS OF POURING THE DECK. THE JOINT SHALL BE FILLED WITH JOINT SEALER MATERIAL. THE JOINT SEALER MATERIAL SHALL CONFORM TO THE REQUIREMENTS OF TYPE B LOW MODULUS SILICONE SEALANT. SEE SECTION 1028 OF THE STANDARD SPECIFICATIONS.

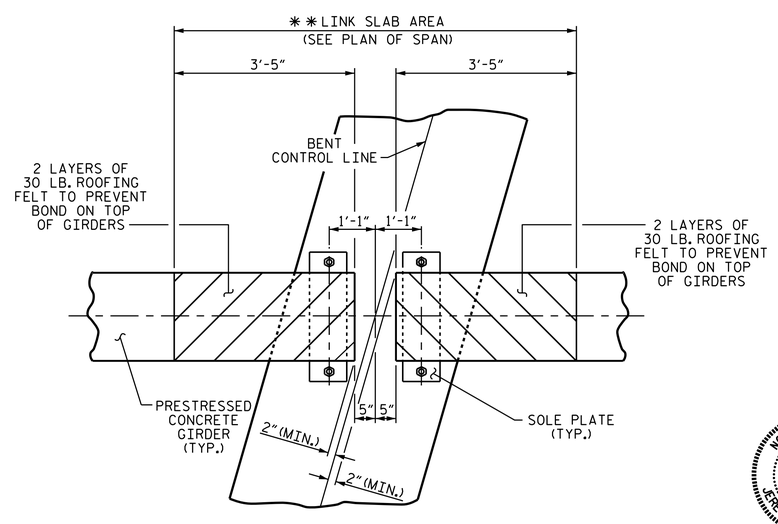

PLAN @ BENT 1

PROJECT NO. B-5780

DAVIDSON COUNTY

STATION: 16+03.00 -L-

SHEET 1 OF 2

STATE OF NORTH CAROLINA
DEPARTMENT OF TRANSPORTATION
RALEIGH

SUPERSTRUCTURE
TYPICAL SECTION

NORTH CAROLINA PROFESSIONAL SEAL 039349 ENGINEER JEREMY P. McCARTHA

DocuSigned by: Jeremy P. McCartha
F757FFCF9CBA420...
8/23/2016

DOCUMENT NOT CONSIDERED FINAL UNLESS ALL SIGNATURES COMPLETED

REVISIONS							
NO.	BY:	DATE:	NO.	BY:	DATE:	SHEET NO.	S-5
1			3			TOTAL SHEETS	28
2			4				

DRAWN BY :	J.P. MCCARTHA	DATE :	3/23/16
CHECKED BY :	H.A. LOCKLEAR	DATE :	5/01/16
DESIGN ENGINEER OF RECORD:	J.P. MCCARTHA	DATE :	7/28/16

22-AUG-2016 10:08
R:\Structures\Plans\B5780_SMU_TS_01.dgn
jdhawk

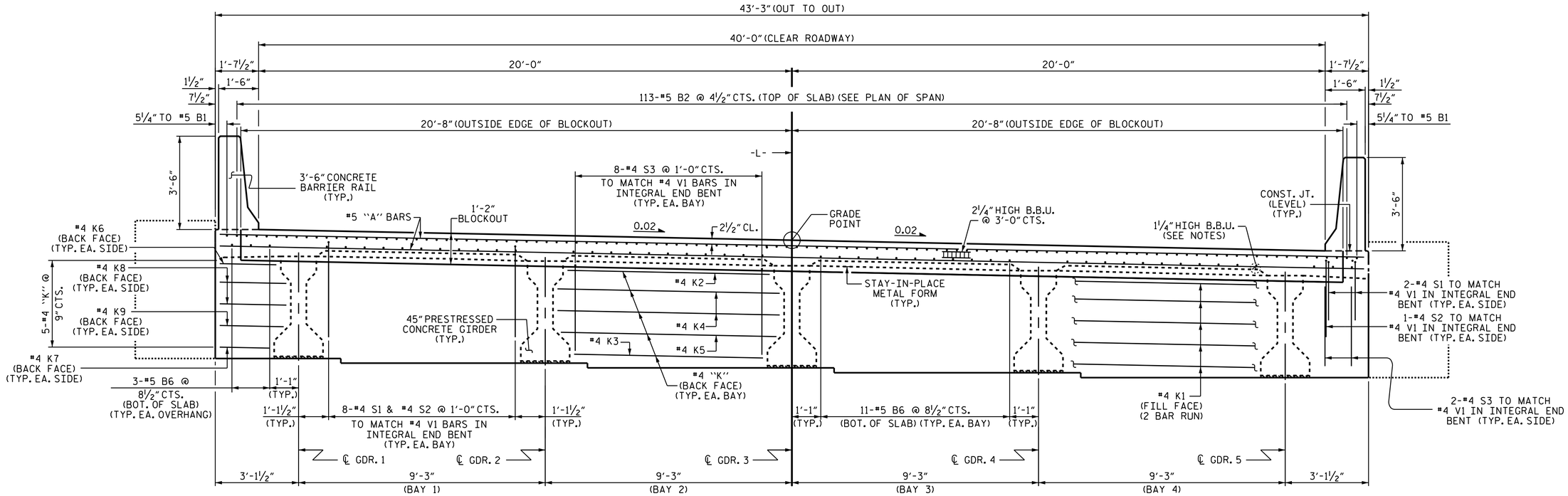

TYPICAL SECTION AT INTEGRAL END BENT

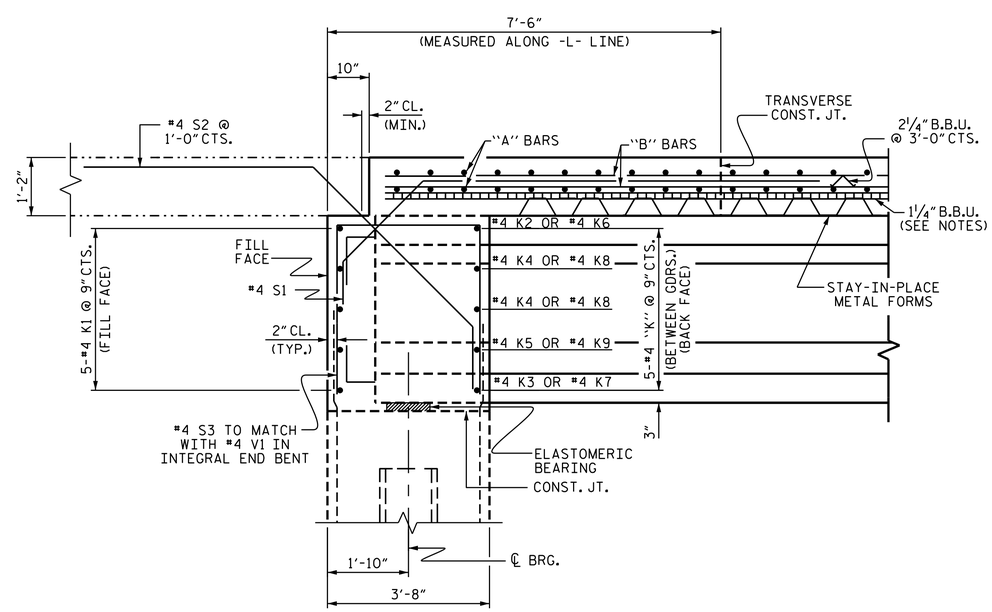

SECTION THROUGH INTEGRAL END BENT

PROJECT NO. B-5780

DAVIDSON COUNTY

STATION: 16+03.00 -L-

SHEET 2 OF 2

STATE OF NORTH CAROLINA
DEPARTMENT OF TRANSPORTATION
RALEIGH

SUPERSTRUCTURE
TYPICAL SECTION

NORTH CAROLINA PROFESSIONAL SEAL 039349 ENGINEER JEREMY P. McCARTHA

DocuSigned by: Jeremy P. McCartha
F757FFCF9CBA420...
8/23/2016

DOCUMENT NOT CONSIDERED FINAL UNLESS ALL SIGNATURES COMPLETED

REVISIONS						SHEET NO.
NO.	BY:	DATE:	NO.	BY:	DATE:	S-6
1			3			TOTAL SHEETS
2			4			28

DRAWN BY : J.P. MCCARTHA DATE : 3/23/16
CHECKED BY : H.A. LOCKLEAR DATE : 5/01/16
DESIGN ENGINEER OF RECORD: J.P. MCCARTHA DATE : 7/28/16

22-AUG-2016 10:08
R:\Structures\Plans\B5780_SMU_TS_01.dgn
jdhawk

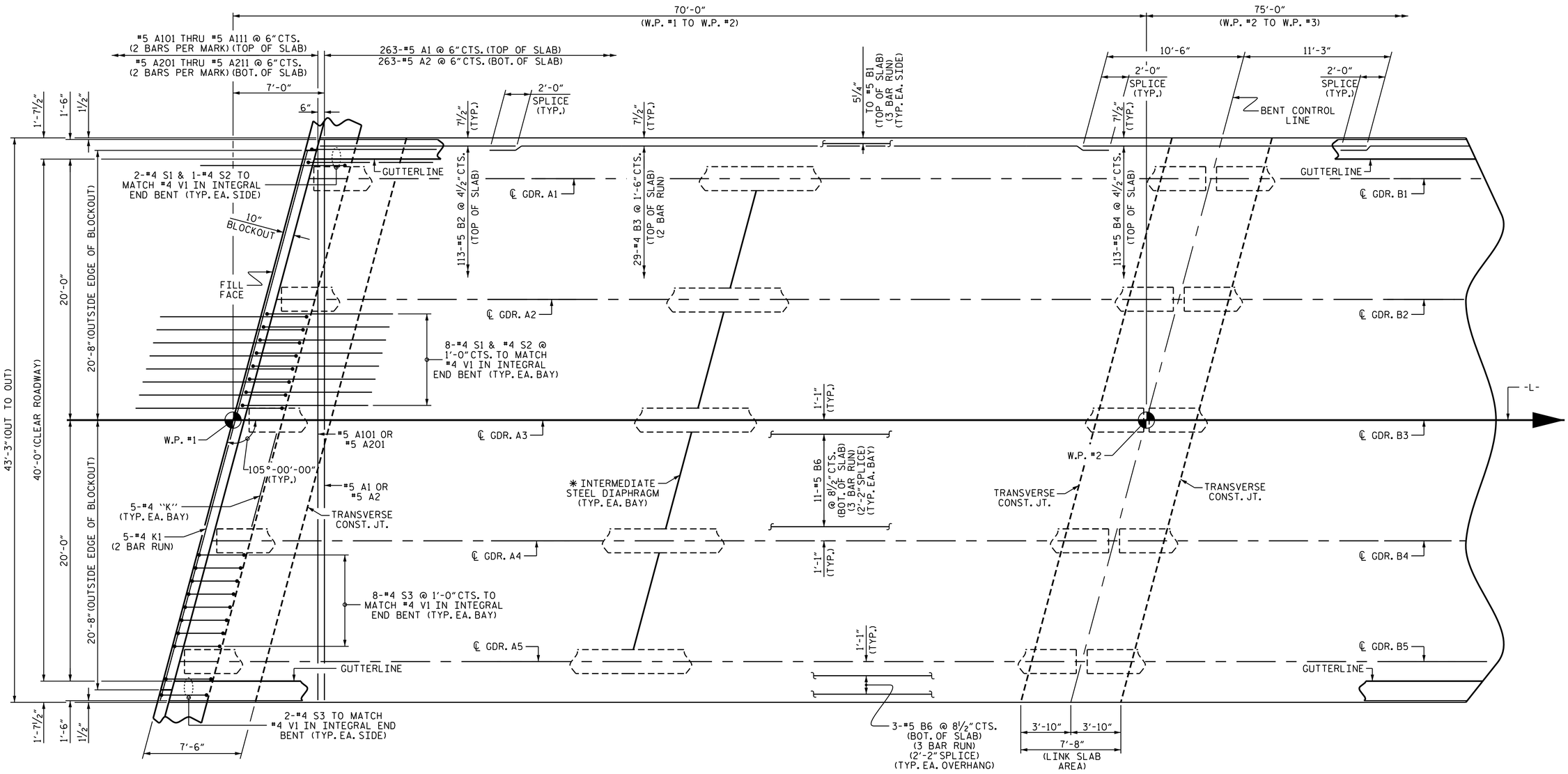

PLAN OF SPAN A

✱ FOR INTERMEDIATE STEEL DIAPHRAGMS DETAILS, SEE "INTERMEDIATE STEEL DIAPHRAGMS FOR TYPE III PRESTRESSED CONCRETE GIRDERS" SHEET.

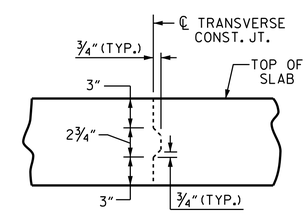

TRANSVERSE CONSTRUCTION JOINT

NOTE: REINFORCING STEEL IN SLAB NOT SHOWN. LONGITUDINAL REINFORCING STEEL SHALL BE CONTINUOUS THROUGH JOINT.

PROJECT NO. B-5780
DAVIDSON COUNTY
STATION: 16+03.00 -L-

SHEET 1 OF 2

STATE OF NORTH CAROLINA
DEPARTMENT OF TRANSPORTATION
RALEIGH

SUPERSTRUCTURE

PLAN OF SPAN A

NORTH CAROLINA PROFESSIONAL SEAL 039349 ENGINEER JEREMY P. McCARTHA

DocuSigned by: Jeremy P. McCartha
F757FCF9CBA420...
8/23/2016

DOCUMENT NOT CONSIDERED FINAL UNLESS ALL SIGNATURES COMPLETED

REVISIONS						SHEET NO.
NO.	BY:	DATE:	NO.	BY:	DATE:	S-7
1			3			TOTAL SHEETS
2			4			28

DRAWN BY : J.P. MCCARTHA DATE : 3/28/16
CHECKED BY : H.A. LOCKLEAR DATE : 5/01/16
DESIGN ENGINEER OF RECORD: J.P. MCCARTHA DATE : 7/28/16

22-AUG-2016 10:08
R:\Structures\Plans\B5780_SMU_S*_01.dgn
jdhawk

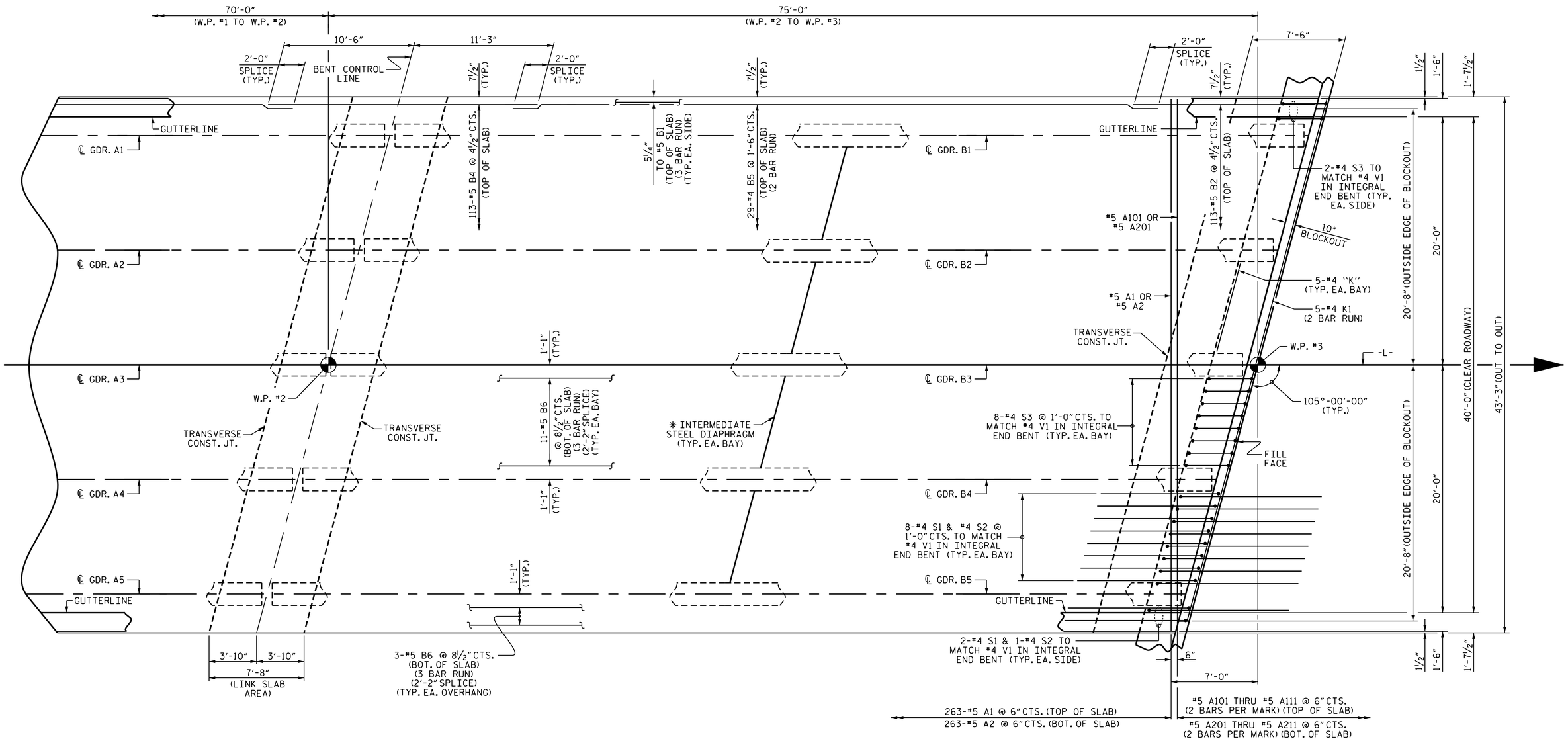

PLAN OF SPAN B

✱ FOR INTERMEDIATE STEEL DIAPHRAGMS DETAILS, SEE "INTERMEDIATE STEEL DIAPHRAGMS FOR TYPE III PRESTRESSED CONCRETE GIRDERS" SHEET.

FOR TRANSVERSE CONSTRUCTION JOINT DETAILS, SEE "PLAN OF SPAN A" SHEET.

PROJECT NO. B-5780

DAVIDSON COUNTY

STATION: 16+03.00 -L-

SHEET 2 OF 2

STATE OF NORTH CAROLINA
DEPARTMENT OF TRANSPORTATION
RALEIGH

SUPERSTRUCTURE

PLAN OF SPAN B

NORTH CAROLINA PROFESSIONAL SEAL 039349 ENGINEER JEREMY P. McCARTHA

DocuSigned by: Jeremy P. McCartha
F757FFCF9CBA420...
8/23/2016

DOCUMENT NOT CONSIDERED FINAL UNLESS ALL SIGNATURES COMPLETED

REVISIONS							
NO.	BY:	DATE:	NO.	BY:	DATE:	SHEET NO.	
1			3			S-8	
2			4			TOTAL SHEETS	
						28	

DRAWN BY : J.P. MCCARTHA DATE : 3/28/16
CHECKED BY : H.A. LOCKLEAR DATE : 5/01/16
DESIGN ENGINEER OF RECORD: J.P. MCCARTHA DATE : 7/28/16

22-AUG-2016 10:08
R:\Structures\Plans\B5780_SMU_S*_01.dgn
jdhawk

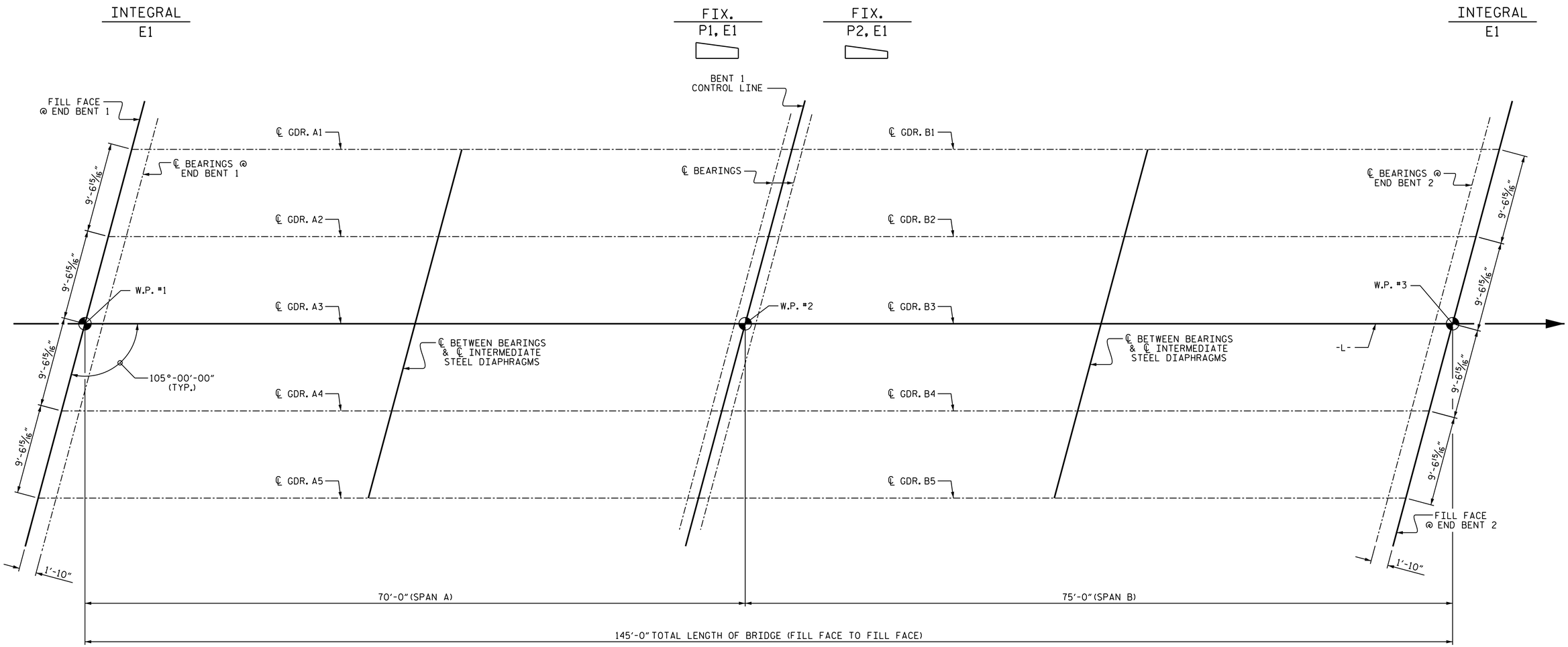

GIRDER LAYOUT

PROJECT NO. B-5780

DAVIDSON COUNTY

STATION: 16+03.00 -L-

NORTH CAROLINA PROFESSIONAL SEAL 039349 ENGINEER JEREMY P. McCARTHA

DocuSigned by: Jeremy P. McCartha
F757FFCF9CBA420...
8/23/2016

DOCUMENT NOT CONSIDERED FINAL UNLESS ALL SIGNATURES COMPLETED

STATE OF NORTH CAROLINA
DEPARTMENT OF TRANSPORTATION
RALEIGH

SUPERSTRUCTURE
GIRDER LAYOUT

REVISIONS						SHEET NO.
NO.	BY:	DATE:	NO.	BY:	DATE:	S-9
1			3			TOTAL SHEETS
2			4			28

DRAWN BY : J. P. MCCARTHA DATE : 3/29/16
CHECKED BY : H.A. LOCKLEAR DATE : 5/01/16
DESIGN ENGINEER OF RECORD: J. P. MCCARTHA DATE : 7/28/16

22-AUG-2016 10:08
R:\Structures\Plans\B5780_SMU_FP_01.dgn
jdhawk

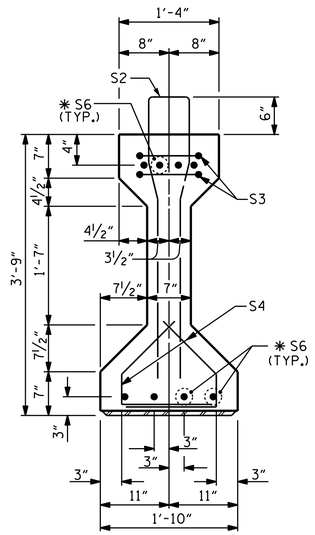

SECTION A-A

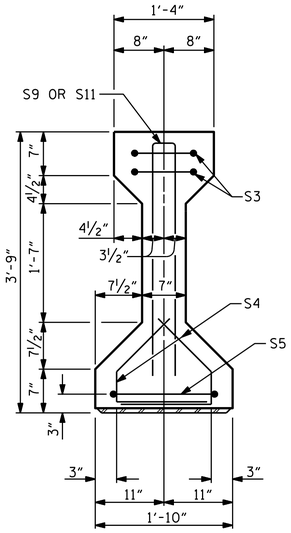

SECTION B-B

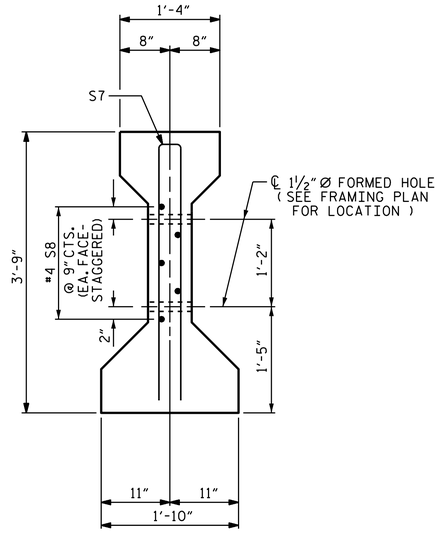

SECTION C-C

(S1 BARS NOT SHOWN)

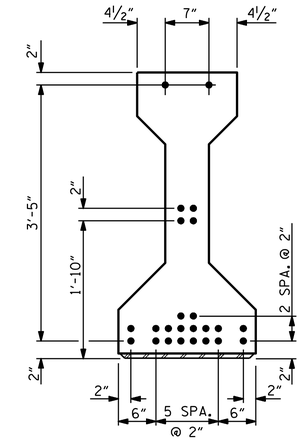

0.6" Ø LOW RELAXATION STRAND LAYOUT

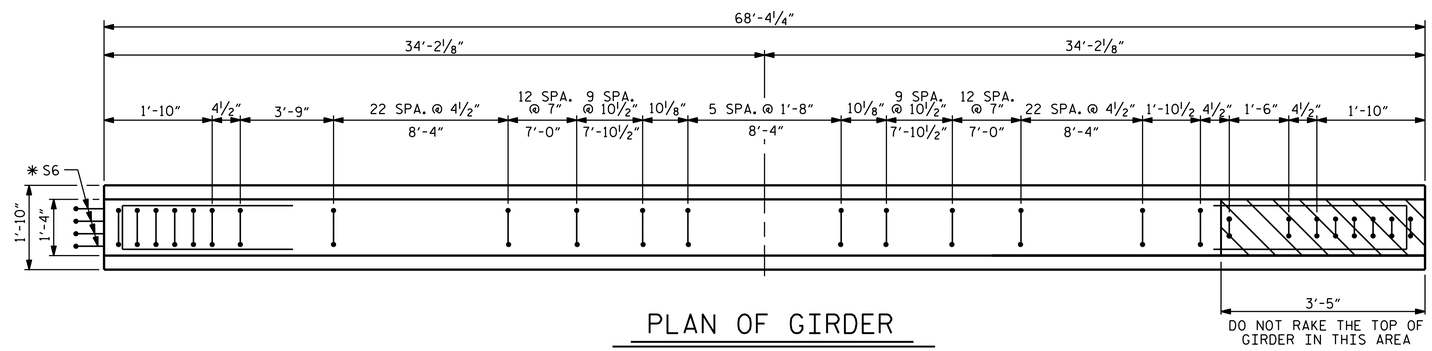

PLAN OF GIRDER

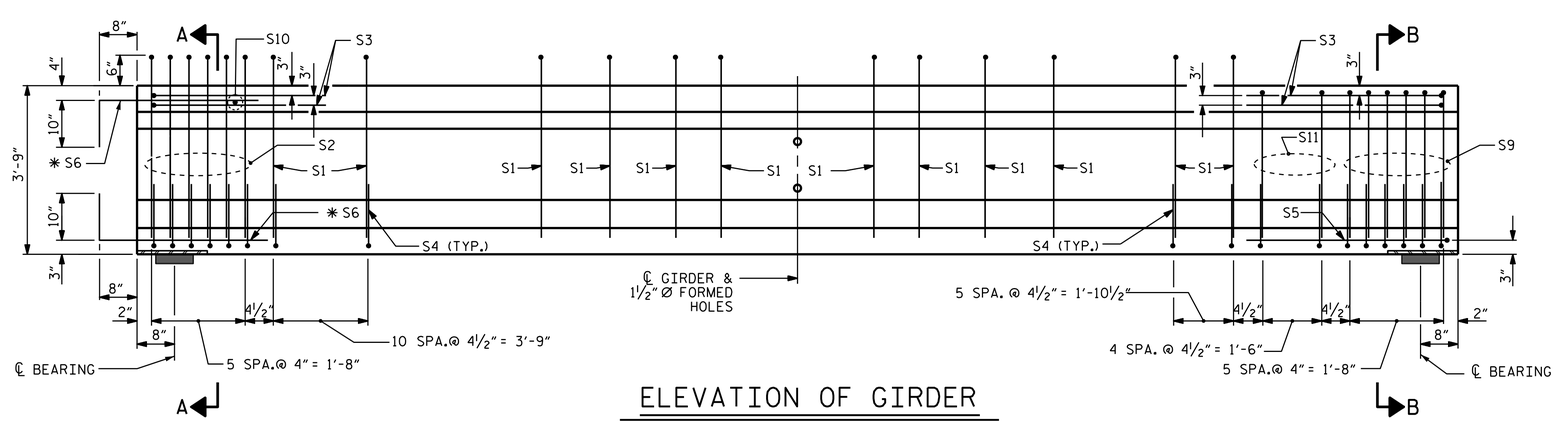

INTEGRAL END BENT

ELEVATION OF GIRDER

(SEE PARTIAL ELEVATION FOR ADDITIONAL "S" BARS)

FIX. (LINK SLAB)

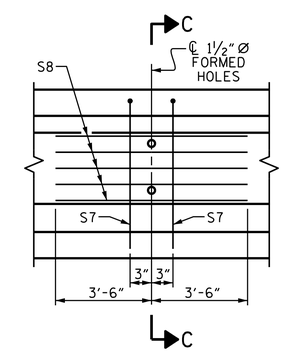

PARTIAL ELEVATION

SHOWING INTERMEDIATE DIAPHRAGM REINFORCING STEEL FOR ALL GIRDERS

0.6" Ø L. R. GRADE 270 STRANDS

AREA (SQUARE INCHES)	ULTIMATE STRENGTH (LBS. PER STRAND)	APPLIED PRESTRESS (LBS. PER STRAND)
0.217	58,600	43,950

REINFORCING STEEL FOR ONE GIRDER

BAR	NUMBER	SIZE	TYPE	LENGTH	WEIGHT
S1	109	#4	1	8'-6"	619
S2	6	#6	1	8'-6"	77
S3	4	#4	3	8'-8"	23
S4	68	#4	2	2'-9"	125
S5	1	#4	3	9'-6"	6
✱ S6	8	#5	STR	3'-8"	31
S7	2	#5	3	7'-2"	15
S8	5	#4	STR	7'-0"	23
S9	6	#6	3	7'-2"	65
S10	1	#3	STR	1'-0"	1
S11	5	#4	3	7'-2"	24

✱ NOTE: S6 BARS SHALL BE BENT BEFORE SHIPMENT. HEAT BENDING SHALL NOT BE ALLOWED.

BAR TYPES

ALL BAR DIMENSIONS ARE OUT-TO-OUT.

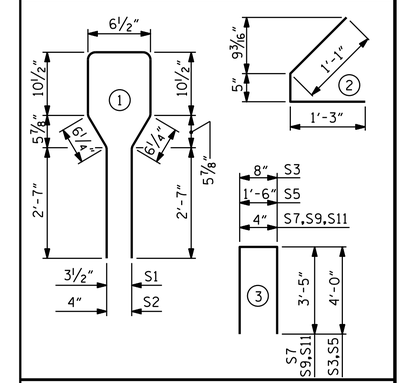

QUANTITIES FOR ONE GIRDER

	REINFORCING STEEL LBS.	7500 PSI CONCRETE C.Y.	0.6" Ø L.R. STRANDS No.
45" PCG GIRDER	1009	9.8	24

GIRDERS REQUIRED

NUMBER	LENGTH	TOTAL LENGTH
5	68'-4¼"	341'-9¼"

PROJECT NO. B-5780

DAVIDSON COUNTY

STATION: 16+03.00 -L-

SHEET 1 OF 2

STATE OF NORTH CAROLINA
DEPARTMENT OF TRANSPORTATION
RALEIGH

STANDARD

AASHTO TYPE III
PRESTRESSED CONCRETE GIRDER
CONTINUOUS FOR LIVE LOAD

(SPAN A)

NORTH CAROLINA PROFESSIONAL SEAL 039349 ENGINEER JEREMY P. McCARTHA

DocuSigned by: Jeremy P. McCartha
F757FFCF9CBA420...
8/23/2016

DOCUMENT NOT CONSIDERED FINAL UNLESS ALL SIGNATURES COMPLETED

REVISIONS						SHEET NO.
NO.	BY:	DATE:	NO.	BY:	DATE:	S-10
1			3			TOTAL SHEETS
2			4			28

ASSEMBLED BY : J. P. MCCARTHA DATE : 4/07/16
CHECKED BY : H.A. LOCKLEAR DATE : 5/01/16

DRAWN BY : ELR 8/91
CHECKED BY : GRP 8/91

REV. 5/1/06R TLA/GM
REV. 10/1/11 MAA/GM
REV. 1/15 MAA/TMG

DESIGN ENGINEER OF RECORD:
J.P. MCCARTHA DATE : 7/28/16

22-AUG-2016 10:08
R:\Structures\Plans\B5780_SMU_G*_01.dgn
jdhawk

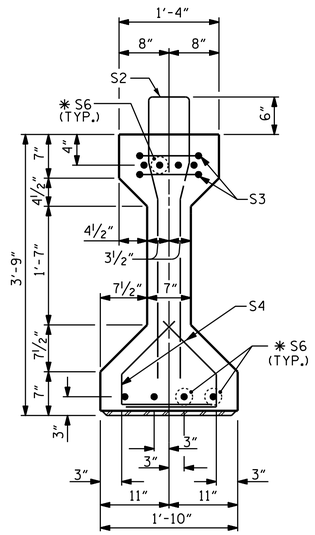

SECTION A-A

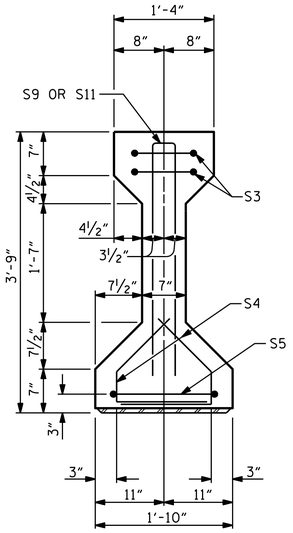

SECTION B-B

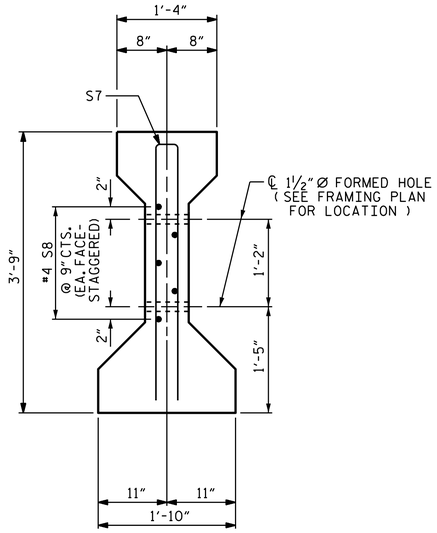

SECTION C-C

(S1 BARS NOT SHOWN)

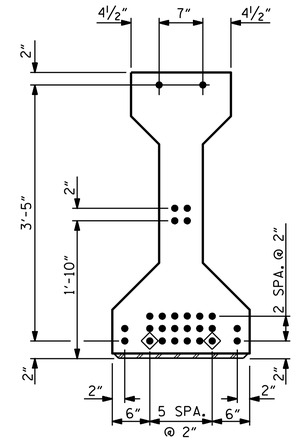

0.6" Ø LOW RELAXATION STRAND LAYOUT

DEBONDING LEGEND

- ● FULLY BONDED STRANDS
- ◇ STRANDS DEBONDED FOR 12'-0" FROM END OF GIRDER

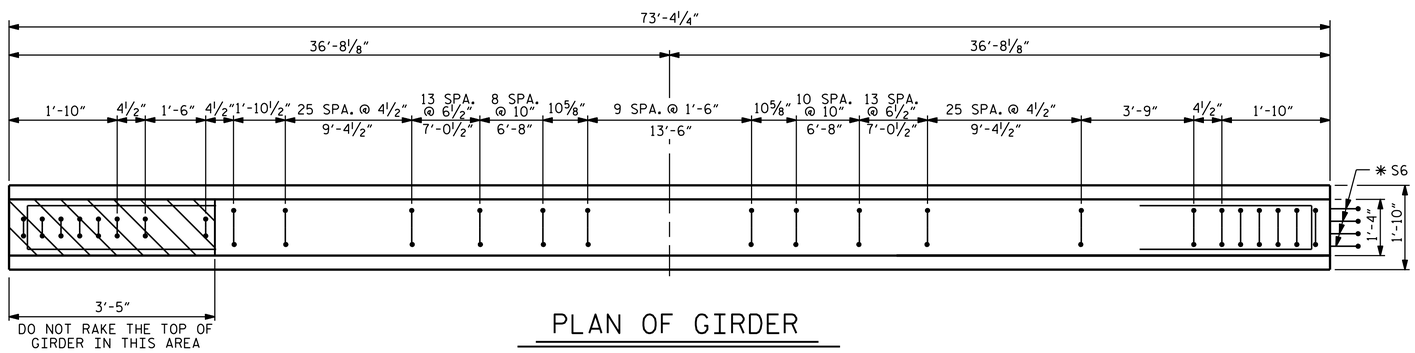

PLAN OF GIRDER

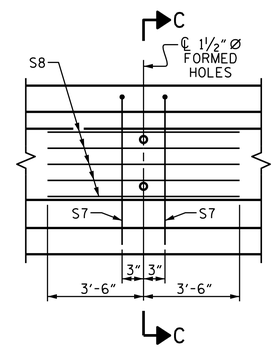

PARTIAL ELEVATION

SHOWING INTERMEDIATE DIAPHRAGM REINFORCING STEEL FOR ALL GIRDERS

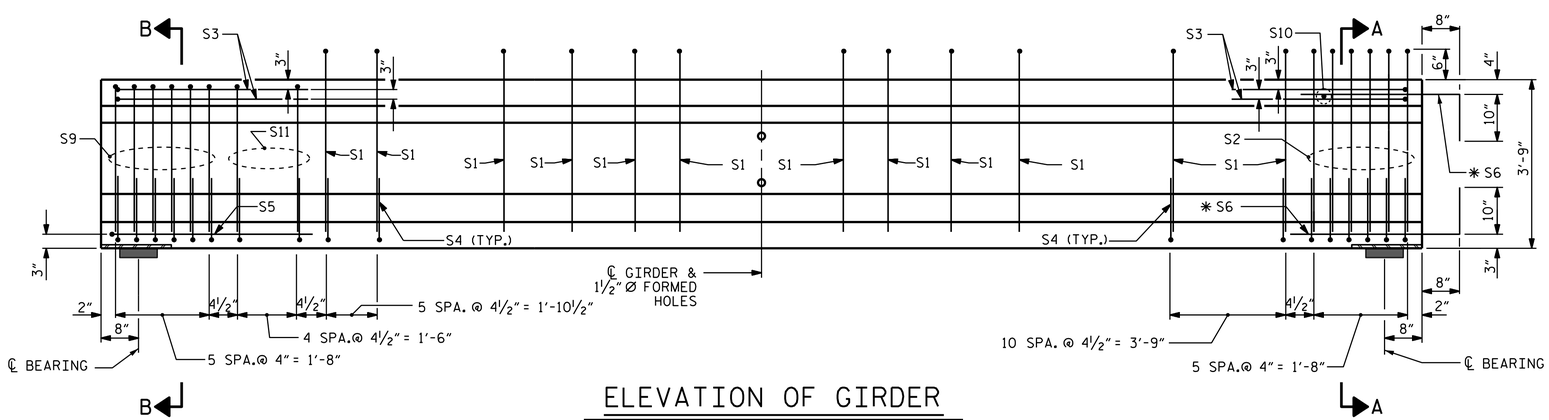

ELEVATION OF GIRDER

(SEE PARTIAL ELEVATION FOR ADDITIONAL "S" BARS)

FIX. (LINK SLAB)

INTEGRAL END BENT

0.6" Ø L. R. GRADE 270 STRANDS

AREA (SQUARE INCHES)	ULTIMATE STRENGTH (LBS. PER STRAND)	APPLIED PRESTRESS (LBS. PER STRAND)
0.217	58,600	43,950

REINFORCING STEEL FOR ONE GIRDER

BAR	NUMBER	SIZE	TYPE	LENGTH	WEIGHT
S1	119	#4	1	8'-6"	676
S2	6	#6	1	8'-6"	77
S3	4	#4	3	8'-8"	23
S4	68	#4	2	2'-9"	125
S5	1	#4	3	9'-6"	6
✱ S6	8	#5	STR	3'-8"	31
S7	2	#5	3	7'-2"	15
S8	5	#4	STR	7'-0"	23
S9	6	#6	3	7'-2"	65
S10	1	#3	STR	1'-0"	1
S11	5	#4	3	7'-2"	24

✱ NOTE: S6 BARS SHALL BE BENT BEFORE SHIPMENT. HEAT BENDING SHALL NOT BE ALLOWED.

BAR TYPES

ALL BAR DIMENSIONS ARE OUT-TO-OUT.

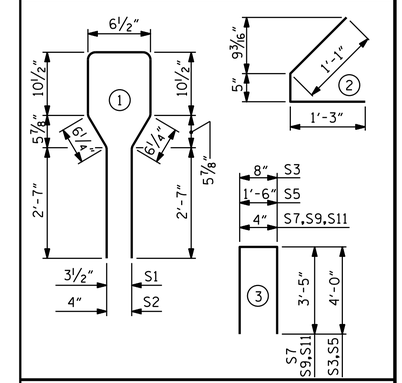

QUANTITIES FOR ONE GIRDER

	REINFORCING STEEL LBS.	7500 PSI CONCRETE C.Y.	0.6" Ø L.R. STRANDS No.
45" PCG GIRDER	1,066	10.5	28

GIRDERS REQUIRED

NUMBER	LENGTH	TOTAL LENGTH
5	73'-4¼"	366'-9¼"

PROJECT NO. B-5780

DAVIDSON COUNTY

STATION: 16+03.00 -L-

SHEET 2 OF 2

STATE OF NORTH CAROLINA
DEPARTMENT OF TRANSPORTATION
RALEIGH

STANDARD

AASHTO TYPE III
PRESTRESSED CONCRETE GIRDER
CONTINUOUS FOR LIVE LOAD
(SPAN B)

NORTH CAROLINA PROFESSIONAL SEAL 039349 ENGINEER JEREMY P. McCARTHA

DocuSigned by: Jeremy P. McCartha
F757FFCF9CBA420...
8/23/2016

DOCUMENT NOT CONSIDERED FINAL UNLESS ALL SIGNATURES COMPLETED

REVISIONS						
NO.	BY:	DATE:	NO.	BY:	DATE:	
1			3			
2			4			

SHEET NO. S-11

TOTAL SHEETS 28

ASSEMBLED BY : J. P. MCCARTHA DATE : 4/07/16
CHECKED BY : H.A. LOCKLEAR DATE : 5/01/16

DRAWN BY : ELR 8/91
CHECKED BY : GRP 8/91

REV. 5/1/06R TLA/GM
REV. 10/1/11 MAA/GM
REV. 1/15 MAA/TMG

DESIGN ENGINEER OF RECORD:
J.P. MCCARTHA DATE : 7/28/16

22-AUG-2016 10:08
R:\Structures\Plans\B5780_SMU_G*_01.dgn
jdhawk

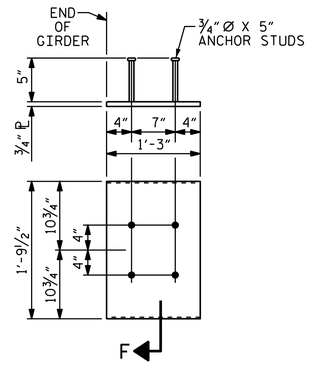

EMBEDDED PLATE "B-1" DETAILS
FOR AASHTO TYPE III GIRDER
(2 REQ'D PER GIRDER)

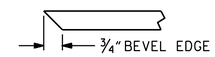

SECTION "F"
(SEE NOTES)

NOTES

ALL PRESTRESSING STRANDS SHALL BE 7-WIRE LOW-RELAXATION GRADE 270 STRANDS AND SHALL CONFORM TO AASHTO M203 EXCEPT FOR SAMPLING REQUIREMENTS WHICH SHALL BE IN ACCORDANCE WITH THE STANDARD SPECIFICATIONS.

ALL REINFORCING STEEL SHALL BE GRADE 60.

EMBEDDED PLATE "B-1" SHALL BE GALVANIZED IN ACCORDANCE WITH THE STANDARD SPECIFICATIONS.

ANCHOR STUDS SHALL CONFORM TO AASHTO M169 GRADES 1010 THROUGH 1020 OR APPROVED EQUAL, AND SHALL MEET THE TYPE "B" REQUIREMENTS OF SUBSECTION 7.3 OF THE ANSI/AASHTO/AWS D1.5 BRIDGE WELDING CODE.

AT ENDS OF GIRDERS TO BE EMBEDDED IN CONCRETE DIAPHRAGMS OR END WALLS, PRESTRESSING STRANDS MAY EXTEND A MAXIMUM OF 2" BEYOND THE GIRDER ENDS. OTHERWISE, PRESTRESSING STRANDS SHALL BE CUT FLUSH WITH THE GIRDER ENDS.

THE TRANSFER OF LOAD FROM THE ANCHORAGES TO THE GIRDER SHALL BE DONE WHEN CONCRETE HAS REACHED A COMPRESSIVE STRENGTH OF NOT LESS THAN 5,500 PSI FOR SPAN A AND 5,900 PSI FOR SPAN B.

DEPENDING ON THE TYPE OF SYSTEM USED TO SUPPORT THE DECK SLAB FORMS, PRESET ANCHORS MAY BE NECESSARY IN THE PRESTRESSED CONCRETE GIRDER.

THE TOP SURFACE OF THE GIRDER, EXCLUDING THE AREA SHOWN ON GIRDER SHEET, SHALL BE RAKED TO A DEPTH OF 1/4".

THE CONTRACTOR HAS THE OPTION TO PROVIDE, AT NO ADDITIONAL COST TO THE DEPARTMENT, 2 ADDITIONAL STRANDS AT THE TOP OF THE GIRDER TO FACILITATE TYING OF THE REINFORCING STEEL. THESE STRANDS SHALL BE PULLED TO A LOAD OF 4500 lbs.

FOR EMBEDED CLIPS FOR PRESTRESSED CONCRETE GIRDERS, SEE SPECIAL PROVISIONS.

DEAD LOAD DEFLECTION TABLE FOR GIRDERS

0.6" Ø LOW RELAXATION	SPAN A GIRDER A1 THRU A5											SPAN B GIRDER B1 THRU B5										
TENTH POINTS	0.0	0.10	0.20	0.30	0.40	0.50	0.60	0.70	0.80	0.90	0.0	0.0	0.10	0.20	0.30	0.40	0.50	0.60	0.70	0.80	0.90	0.0
CAMBER (GIRDER ALONE IN PLACE) ↑	0.000	0.038	0.072	0.099	0.116	0.122	0.116	0.099	0.072	0.038	0.000	0.000	0.047	0.089	0.121	0.142	0.149	0.142	0.121	0.089	0.047	0.000
* DEFLECTION DUE TO SUPERIMPOSED D.L. ↓	0.000	0.022	0.042	0.058	0.068	0.071	0.068	0.058	0.042	0.022	0.000	0.000	0.030	0.056	0.077	0.090	0.095	0.090	0.077	0.056	0.030	0.000
FINAL CAMBER ↑	0	3/16"	3/8"	1/2"	9/16"	5/8"	9/16"	1/2"	3/8"	3/16"	0	0	3/16"	3/8"	1/2"	5/8"	5/8"	5/8"	1/2"	3/8"	3/16"	0

* INCLUDES FUTURE WEARING SURFACE.

ALL VALUES ARE SHOWN IN FEET (DECIMAL FORM), EXCEPT "FINAL CAMBER", WHICH IS GIVEN IN INCHES (FRACTION FORM).

PROJECT NO. B-5780
DAVIDSON COUNTY
STATION: 16+03.00 -L-

NORTH CAROLINA PROFESSIONAL SEAL 039349 ENGINEER JEREMY P. McCARTHA

DocuSigned by: Jeremy P. McCartha
F757FFCF9CBA420...
8/23/2016

DOCUMENT NOT CONSIDERED FINAL UNLESS ALL SIGNATURES COMPLETED

STATE OF NORTH CAROLINA
DEPARTMENT OF TRANSPORTATION
RALEIGH

STANDARD
PRESTRESSED CONCRETE GIRDER CONTINUOUS FOR LIVE LOAD DETAILS

REVISIONS							
NO.	BY:	DATE:	NO.	BY:	DATE:	SHEET NO.	S-12
1			3			TOTAL SHEETS	28
2			4				

ASSEMBLED BY : J. P. MCCARTHA DATE : 3/31/16
CHECKED BY : H.A. LOCKLEAR DATE : 5/01/16

DRAWN BY : ELR 11/91
CHECKED BY : GRP 11/91

REV. 10/1/11 MAA/GM
REV. 1/15 MAA/TMG
REV. 2/15 MAA/TMG

DESIGN ENGINEER OF RECORD:
J.P. MCCARTHA DATE : 7/28/16

22-AUG-2016 10:08
R:\Structures\Plans\B5780_SMU_G*_01.dgn
jdhawk

STD. NO. PCG9

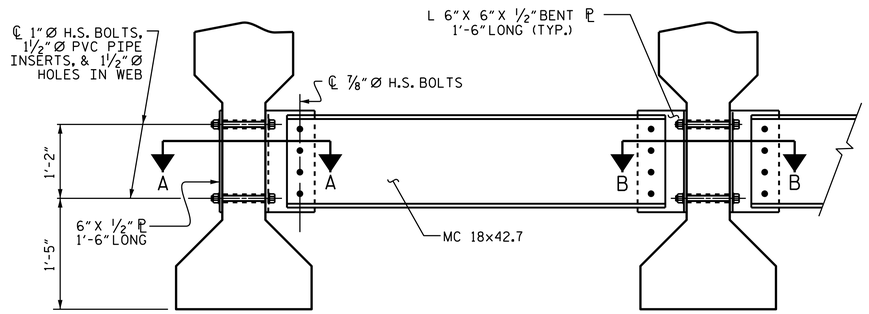

EXTERIOR GIRDER

INTERIOR GIRDER

PART SECTION AT INTERMEDIATE DIAPHRAGM

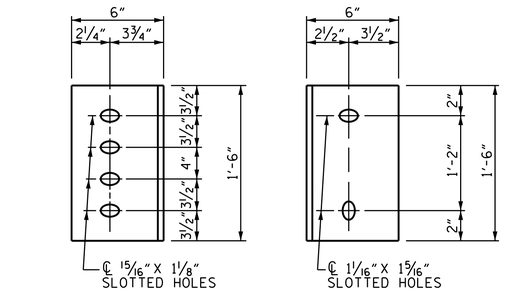

DIAPHRAGM FACE

WEB FACE

CONNECTOR PLATE DETAILS

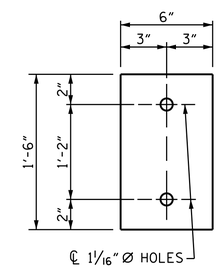

PLATE DETAILS

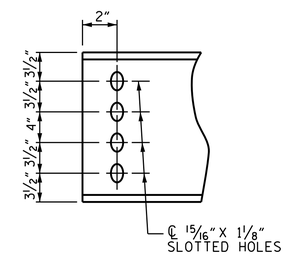

CHANNEL END

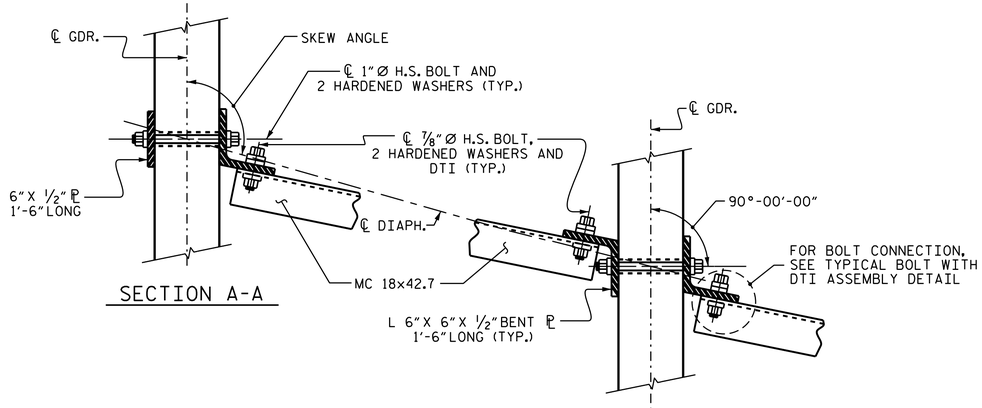

SECTION A-A

SECTION B-B

CONNECTION DETAILS

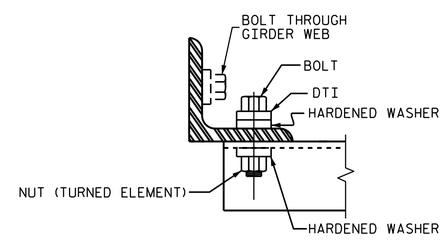

BOLT WITH DTI ASSEMBLY DETAIL

STRUCTURAL STEEL NOTES

ALL INTERMEDIATE DIAPHRAGM STEEL AND CONNECTOR PLATES SHALL BE AASHTO M270 GRADE 50 OR APPROVED EQUAL.

TENSION ON THE ASTM A325 BOLTS THROUGH THE CHANNEL MEMBER SHALL BE CALIBRATED USING DIRECT TENSION INDICATOR WASHERS IN ACCORDANCE WITH THE STANDARD SPECIFICATIONS.

TENSION ON THE ASTM A449 BOLTS THROUGH THE GIRDER WEB SHALL BE SNUG TIGHTENED FOLLOWED BY AN ADDITIONAL ¼ TURN.

THE PLATES, BENT PLATES, CHANNELS, AND ANGLES SHALL BE GALVANIZED OR METALLIZED IN ACCORDANCE WITH THE STANDARD SPECIFICATIONS. FOR THERMAL SPRAYED COATINGS (METALLIZATION), SEE SPECIAL PROVISIONS.

FOR METALLIZATION, APPLY AN 8 MIL THICK 99.99 PERCENT ZINC (W-Zn-1) THERMAL SPRAYED COATING WITH A 0.5 MIL THICK SEAL COAT TO ALL STEEL DIAPHRAGM SURFACES IN ACCORDANCE WITH THE THERMAL SPRAYED COATINGS SPECIAL PROVISION AND SECTION 442 OF THE STANDARD SPECIFICATIONS.

GALVANIZE THE HIGH STRENGTH BOLTS, NUTS, WASHERS AND DIRECT TENSION INDICATORS IN ACCORDANCE WITH THE STANDARD SPECIFICATIONS.

USE AN ASTM F436 HARDENED WASHER WITH STANDARD AND SLOTTED HOLES UNDER EACH BOLT HEAD AND NUT.

FOR BOLTS THROUGH THE GIRDER WEB, PROVIDE SUFFICIENT LENGTH OF THREADS ON ALL BOLTS TO ACCOMMODATE WASHERS AND THE THICKNESS OF CONNECTING MEMBER PLUS AT LEAST ¼" PROJECTION BEYOND THE NUT.

INTERMEDIATE DIAPHRAGM ASSEMBLY SHALL COMPLY WITH SECTION 1072 OF THE STANDARD SPECIFICATIONS.

SUBMIT TWO SETS OF WORKING DRAWINGS FOR THE INTERMEDIATE DIAPHRAGM ASSEMBLY FOR REVIEW, COMMENTS AND ACCEPTANCE. AFTER REVIEW, COMMENTS, AND ACCEPTANCE, SUBMIT SEVEN SETS FOR DISTRIBUTION.

IN THE EXTERIOR BAYS, PLACE TEMPORARY STRUTS BETWEEN PRESTRESSED GIRDERS ADJACENT TO THE STEEL DIAPHRAGMS. STRUTS SHALL REMAIN IN PLACE 3 DAYS AFTER CONCRETE IS PLACED.

THE COST OF THE STEEL DIAPHRAGMS AND ASSEMBLIES SHALL BE INCLUDED IN THE UNIT PRICE BID FOR PRESTRESSED CONCRETE GIRDERS.

PROJECT NO. B-5780
DAVIDSON COUNTY
STATION: 16+03.00 -L-

NORTH CAROLINA PROFESSIONAL SEAL 039349 ENGINEER JEREMY P. McCARTHA

DocuSigned by: Jeremy P. McCartha
F757FFCF9CBA420...
8/23/2016

STATE OF NORTH CAROLINA
DEPARTMENT OF TRANSPORTATION
RALEIGH
STANDARD

INTERMEDIATE STEEL DIAPHRAGMS FOR TYPE III PRESTRESSED CONCRETE GIRDERS

REVISIONS						SHEET NO.
NO.	BY:	DATE:	NO.	BY:	DATE:	S-13
1			3			TOTAL SHEETS
2			4			28

DOCUMENT NOT CONSIDERED FINAL UNLESS ALL SIGNATURES COMPLETED

STD. NO. PCG10

ASSEMBLED BY : J. P. MCCARTHA DATE : 3/31/16
CHECKED BY : H.A. LOCKLEAR DATE : 5/01/16

DRAWN BY : TLA 6/05
CHECKED BY : VC 6/05

ADDED 10/21/05
REV. 5/1/06RRR KMM/GM
REV. 10/1/11 MAA/GM

DESIGN ENGINEER OF RECORD:
J.P. MCCARTHA DATE : 7/28/16

22-AUG-2016 10:08
R:\Structures\Plans\B5780_SMU_G*_01.dgn
jdhawk

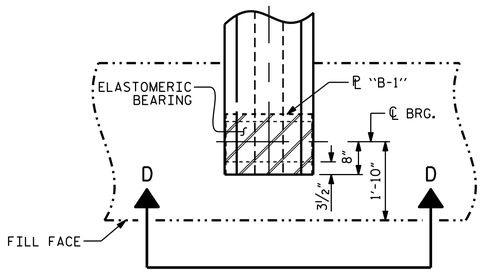

PLAN VIEW AT INTEGRAL END BENT

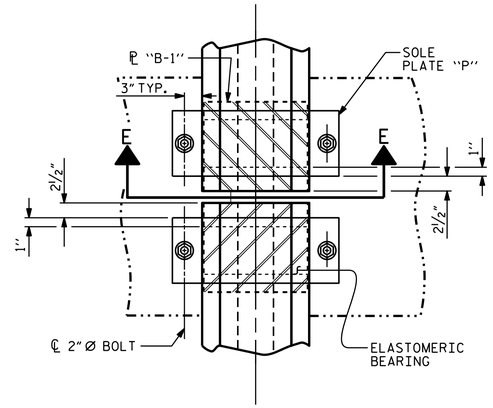

PLAN VIEW AT BENT
(SHOWING CONTINUOUS BENT)

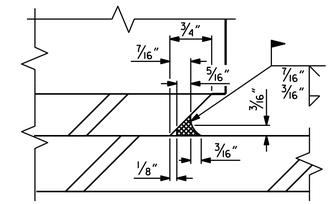

DETAIL "A"

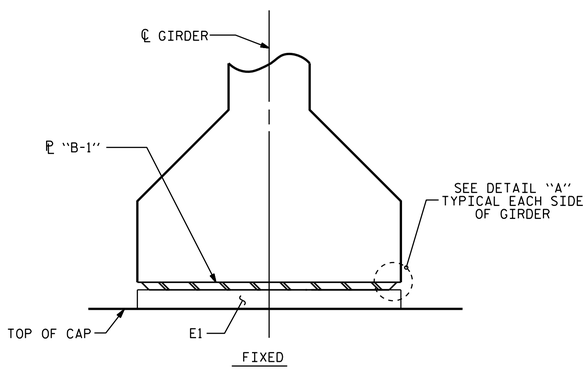

SECTION D-D
(AT INTEGRAL END BENT)

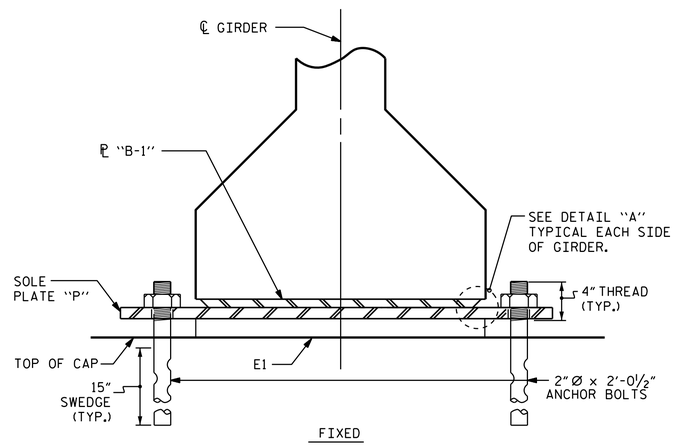

SECTION E-E
(AT BENT 1)

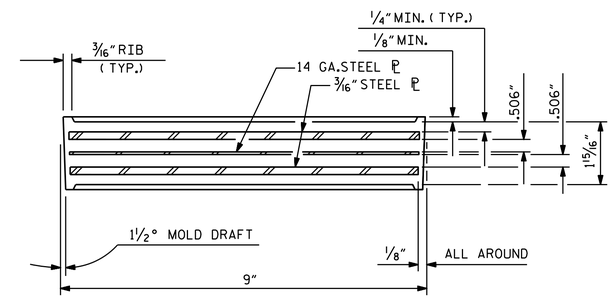

TYPICAL SECTION OF ELASTOMERIC BEARINGS

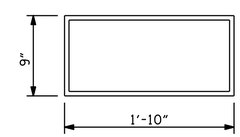

E1 (20 REQ'D)

PLAN VIEW OF ELASTOMERIC BEARING

TYPE IV

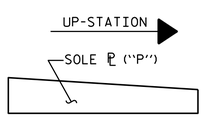

SOLE ℙ PLACEMENT DETAIL

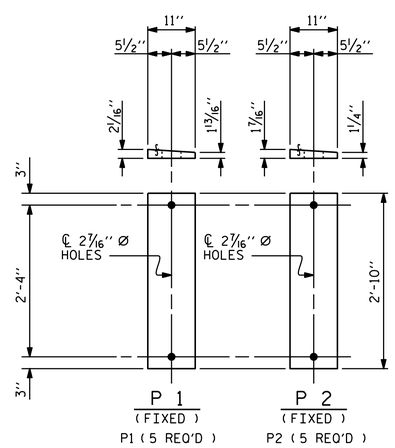

SOLE PLATE DETAILS ("P")

NOTES

AT ALL FIXED POINTS OF SUPPORT, NUTS FOR ANCHOR BOLTS ARE TO BE TIGHTENED FINGER TIGHT AND THEN BACKED OFF ½ TURN. THE THREAD OF THE NUT AND BOLT SHALL THEN BE BURRED WITH A SHARP POINTED TOOL.

STEEL SOLE PLATES, ANCHOR BOLTS, NUTS, AND WASHERS SHALL BE GALVANIZED IN ACCORDANCE WITH THE STANDARD SPECIFICATIONS.

PRIOR TO WELDING, GRIND THE GALVANIZED SURFACE OF THE PORTION OF THE EMBEDDED PLATE AND SOLE PLATE THAT ARE TO BE WELDED. AFTER WELDING, DAMAGED GALVANIZED SURFACES SHALL BE REPAIRED IN ACCORDANCE WITH THE STANDARD SPECIFICATIONS.

WHEN WELDING THE SOLE PLATE TO THE EMBEDDED PLATE IN THE GIRDER, USE TEMPERATURE INDICATING WAX PENS, OR OTHER SUITABLE MEANS, TO ENSURE THAT THE TEMPERATURE OF THE SOLE PLATE DOES NOT EXCEED 300°F. TEMPERATURES ABOVE THIS MAY DAMAGE THE ELASTOMER.

SOLE PLATE "P", BOLTS, NUTS, WASHERS, AND PIPE SLEEVE SHALL BE INCLUDED IN THE PAY ITEM FOR PRESTRESSED CONCRETE GIRDERS.

ANCHOR BOLTS SHALL MEET THE REQUIREMENTS OF ASTM A449. NUTS SHALL MEET THE REQUIREMENTS OF AASHTO M291-DH OR AASHTO M292-2H. SHOP DRAWINGS ARE NOT REQUIRED FOR ANCHOR BOLTS AND NUTS. SHOP INSPECTION IS REQUIRED.

ALL SURFACES OF BEARING PLATES SHALL BE SMOOTH AND STRAIGHT.

THE ELASTOMER IN THE STEEL REINFORCED BEARINGS SHALL HAVE A SHEAR MODULUS OF 0.160 KSI, IN ACCORDANCE WITH AASHTO M251.

FOR STEEL REINFORCED ELASTOMERIC BEARINGS, SEE SPECIAL PROVISIONS.

MAXIMUM ALLOWABLE SERVICE LOADS	
D.L.+L.L. (NO IMPACT)	
TYPE IV	225 k

PROJECT NO. B-5780
DAVIDSON COUNTY
STATION: 16+03.00 -L-

STATE OF NORTH CAROLINA
DEPARTMENT OF TRANSPORTATION
RALEIGH
STANDARD

ELASTOMERIC BEARING DETAILS

PRESTRESSED CONCRETE GIRDER SUPERSTRUCTURE

NORTH CAROLINA PROFESSIONAL SEAL 039349 ENGINEER JEREMY P. McCARTHA
DocuSigned by: Jeremy P. McCartha
F757FFCF9CBA420...
8/23/2016

DOCUMENT NOT CONSIDERED FINAL UNLESS ALL SIGNATURES COMPLETED

REVISIONS								SHEET NO.
NO.	BY:	DATE:	NO.	BY:	DATE:			S-14
1			3					TOTAL SHEETS
2			4					28

ASSEMBLED BY : J. P. MCCARTHA	DATE : 3/31/16		
CHECKED BY : H.A. LOCKLEAR	DATE : ?/??/16		
DRAWN BY : WJH 8/89	REV. 10/1/11	MAA/GM	DESIGN ENGINEER OF RECORD:
CHECKED BY : CRK 8/89	REV. 6/13	AAC/MAA	J.P. MCCARTHA DATE : 7/28/16
	REV. 1/15	MAA/TMG	

22-AUG-2016 10:08
R:\Structures\Plans\B5780_SMU_EB_01.dgn
jdhawk

STD. NO. EB3

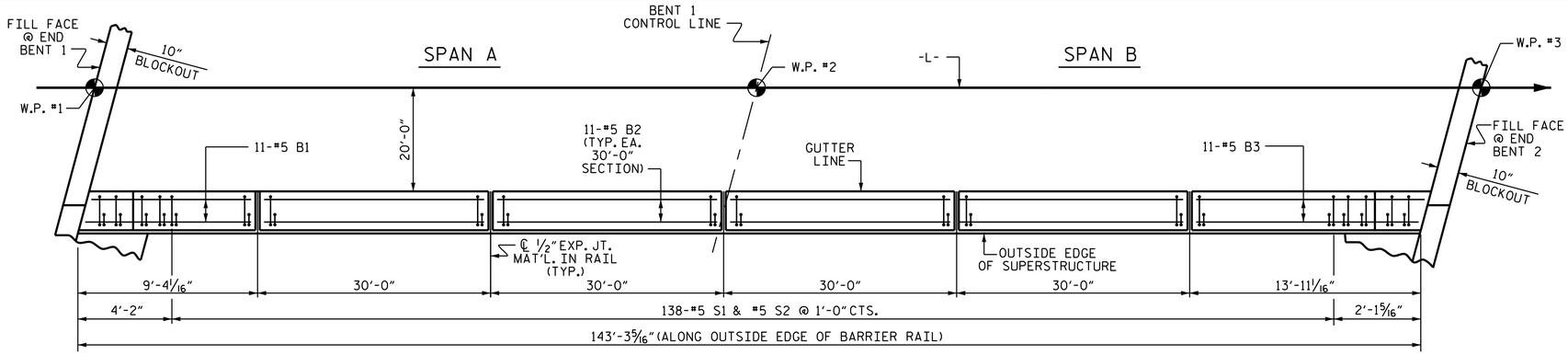

PLAN OF CONCRETE BARRIER RAIL

(RIGHT SIDE BARRIER RAIL SHOWN, LEFT SIDE SIMILAR BY ROTATION)

NOTES

THE BARRIER RAIL IN EACH SPAN SHALL NOT BE CAST UNTIL ALL SLAB CONCRETE IN THAT SPAN HAS BEEN CAST AND HAS REACHED A MINIMUM COMPRESSIVE STRENGTH OF 3,000 PSI.

THE #5 S3, S4, S5 & S6 BARS SHALL BE INSTALLED, USING AN ADHESIVE ANCHORING SYSTEM, AFTER SAWING THE JOINT. THE YIELD LOAD FOR THE #5 S3, S4, S5 & S6 BARS IS 18.6 KIPS. FIELD TESTING FOR THE ADHESIVE BONDING SYSTEM IS NOT REQUIRED.

ALL REINFORCING STEEL IN BARRIER RAILS SHALL BE EPOXY COATED.

GROOVED CONTRACTION JOINTS, 1/2" IN DEPTH, SHALL BE TOOLED IN ALL EXPOSED FACES OF THE BARRIER RAIL AND IN ACCORDANCE WITH ARTICLE 825-10(B) OF THE STANDARD SPECIFICATIONS. THE CONTRACTION JOINT SHALL BE LOCATED AT EACH THIRD POINT BETWEEN BARRIER RAIL EXPANSION JOINTS. ONLY ONE CONTRACTION JOINT IS REQUIRED AT MIDPOINT OF BARRIER RAIL SEGMENTS LESS THAN 20 FEET IN LENGTH AND NO CONTRACTION JOINTS ARE REQUIRED FOR THOSE SEGMENTS LESS THAN 10 FEET IN LENGTH.

BAR TYPES

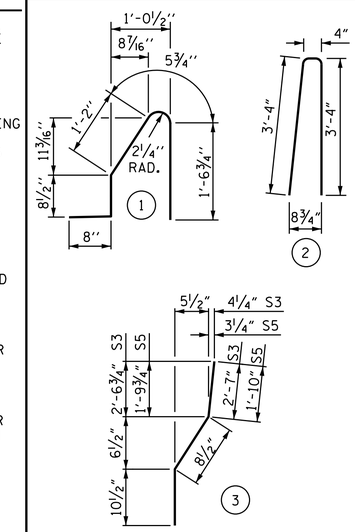

ALL BAR DIMENSIONS ARE OUT TO OUT.

BILL OF MATERIAL

FOR CONCRETE BARRIER RAIL ONLY

BAR	NO.	SIZE	TYPE	LENGTH	WEIGHT
* B1	22	#5	STR	8'-7"	197
* B2	88	#5	STR	29'-7"	2715
* B3	22	#5	STR	13'-7"	312
* S1	276	#5	1	4'-7"	1319
* S2	276	#5	2	7'-0"	2015
* S3	4	#5	3	4'-2"	17
* S4	4	#5	STR	4'-0"	17
* S5	8	#5	3	3'-5"	29
* S6	8	#5	STR	3'-3"	27
* EPOXY COATED REINFORCING STEEL				LBS.	6,648
CLASS AA CONCRETE				C.Y.	39.0
CONCRETE BARRIER RAIL				LIN. FT.	286.55

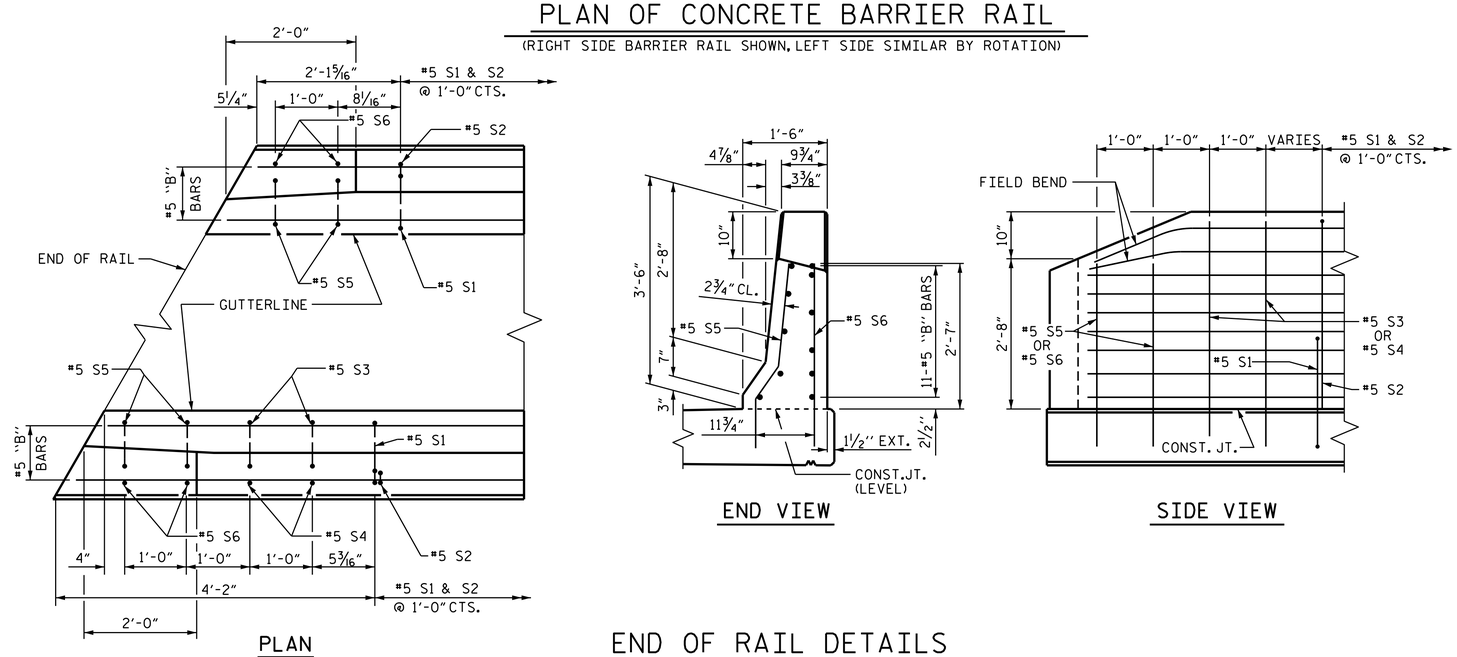

END OF RAIL DETAILS

FOR ADHESIVE ANCHORING AT SAWED JOINTS

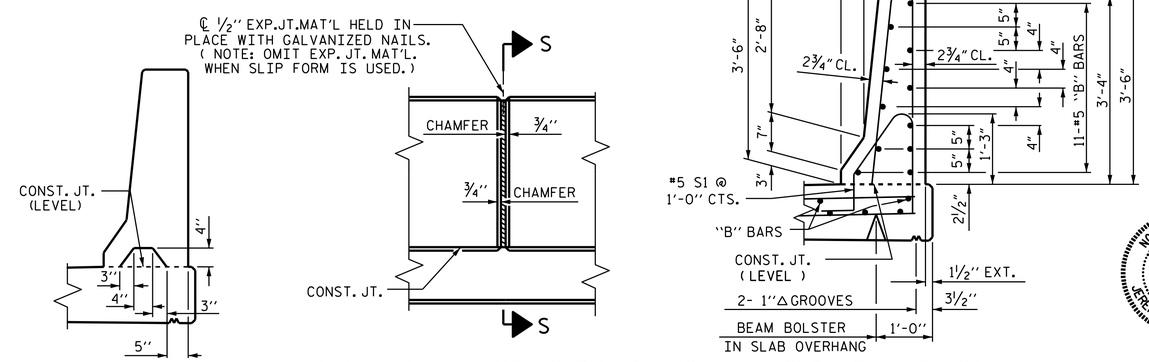

BARRIER RAIL DETAILS

NORTH CAROLINA PROFESSIONAL SEAL 039349 ENGINEER JEREMY P. McCARTHA

DocuSigned by: Jeremy P. McCartha F757FFCF9CBA420...
8/23/2016

DOCUMENT NOT CONSIDERED FINAL UNLESS ALL SIGNATURES COMPLETED

PROJECT NO. B-5780
DAVIDSON COUNTY
STATION: 16+03.00 -L-

SHEET 1 OF 2

STATE OF NORTH CAROLINA
DEPARTMENT OF TRANSPORTATION
RALEIGH

STANDARD
3'-6" CONCRETE BARRIER RAIL

REVISIONS							
NO.	BY:	DATE:	NO.	BY:	DATE:	SHEET NO.	S-15
1			3			TOTAL SHEETS	28
2			4				

ASSEMBLED BY : J.P. MCCARTHA DATE : 4/06/16
CHECKED BY : H.A. LOCKLEAR DATE : 5/01/16

DRAWN BY : ARB 5/87
CHECKED BY : SJD 9/87

REV. 10/1/11 MAA/GM
REV. 7/12 MAA/GM
REV. 6/13 MAA/GM

22-AUG-2016 10:08
R:\Structures\Plans\B5780_SMU_BR_01.dgn
jdhawk

STD. NO. CBR1

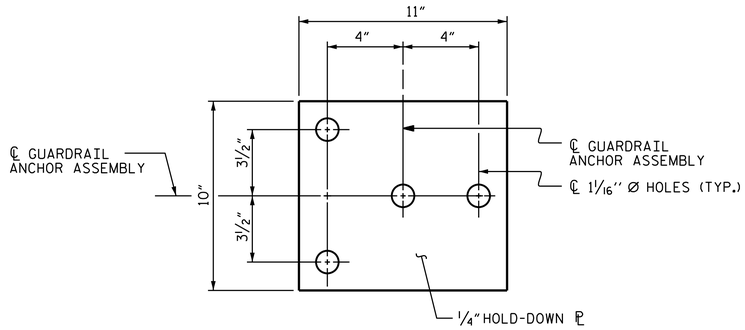

PLAN

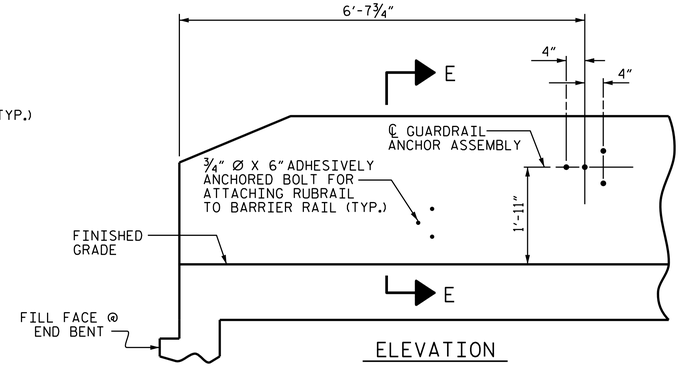

ELEVATION

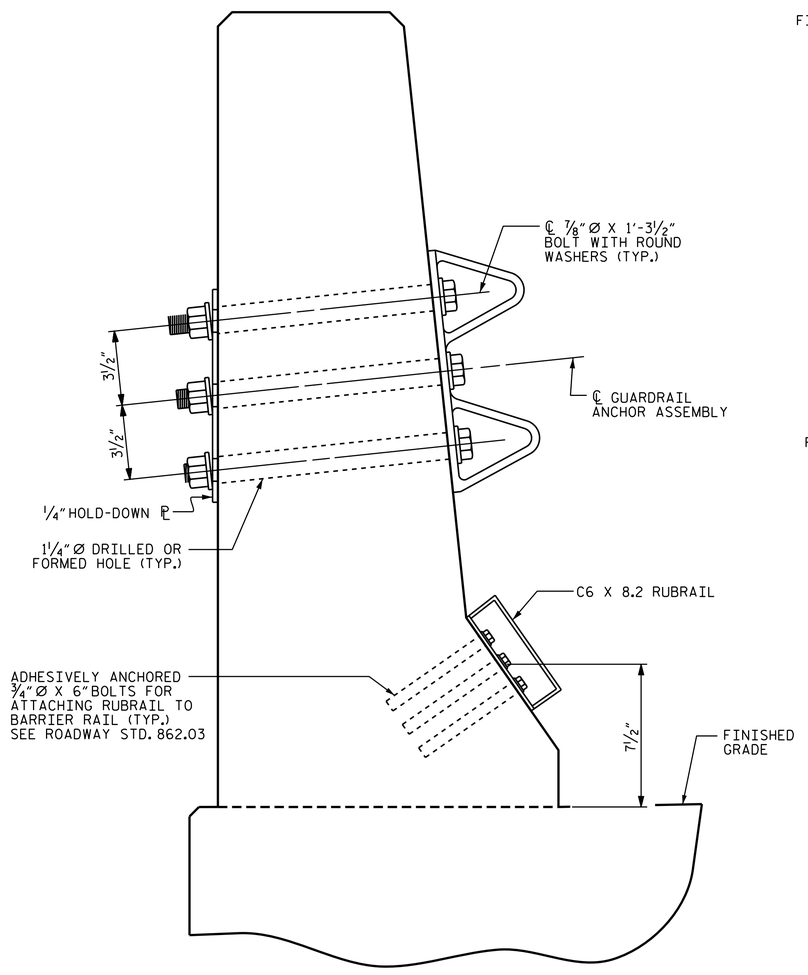

SECTION E-E

GUARDRAIL ANCHOR ASSEMBLY DETAILS

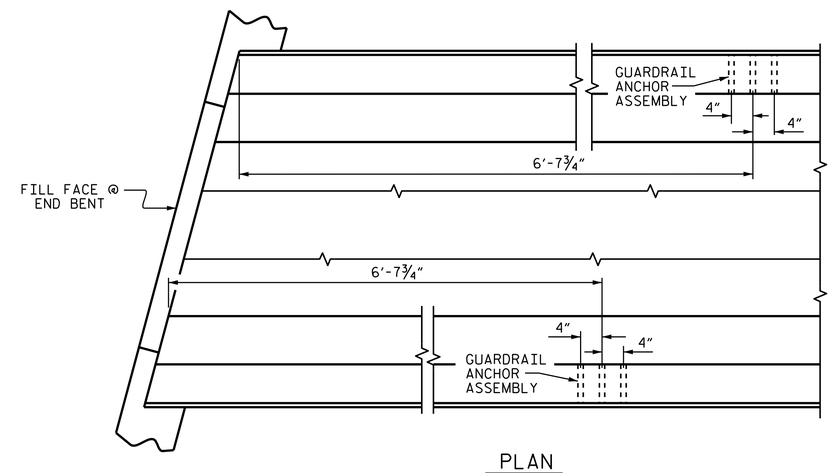

PLAN

LOCATION OF ANCHORS FOR GUARDRAIL

END BENT 1 SHOWN, END BENT 2 SIMILAR.

NOTES

THE GUARDRAIL ANCHOR ASSEMBLY SHALL CONSIST OF A 1/4" HOLD-DOWN PLATE AND 4 - 7/8" Ø BOLTS WITH NUTS AND WASHERS, RUBRAIL, AND ADHESIVELY ANCHORED BOLTS.

THE HOLD-DOWN PLATE SHALL CONFORM TO AASHTO M270 GRADE 36. AFTER FABRICATION, THE HOLD-DOWN PLATE SHALL BE HOT-DIP GALVANIZED IN ACCORDANCE WITH AASHTO M111.

BOLTS SHALL CONFORM TO THE REQUIREMENTS OF ASTM A307 AND NUTS SHALL CONFORM TO THE REQUIREMENTS OF AASHTO M291. BOLTS, NUTS AND WASHERS SHALL BE GALVANIZED. (AT THE CONTRACTOR'S OPTION, STAINLESS STEEL BOLTS, NUTS AND WASHERS MAY BE USED AS AN ALTERNATE FOR THE 7/8" Ø GALVANIZED BOLTS, NUTS AND WASHERS. THEY SHALL CONFORM TO OR EXCEED THE MECHANICAL REQUIREMENTS OF ASTM A307. THE USE OF THIS ALTERNATE SHALL BE APPROVED BY THE ENGINEER.)

THE GUARDRAIL ANCHOR ASSEMBLY IS REQUIRED AT ALL POINTS WHERE APPROACH GUARDRAIL IS TO BE ATTACHED TO THE END OF BARRIER RAIL. FOR POINTS OF ATTACHMENT, SEE SKETCH.

AFTER INSTALLATION, THE EXPOSED THREAD OF THE BOLT SHALL BE BURRED WITH A SHARP POINTED TOOL.

THE COST OF THE GUARDRAIL ANCHOR ASSEMBLY SHALL BE INCLUDED IN THE UNIT CONTRACT PRICE BID FOR CONCRETE BARRIER RAIL.

THE 1 1/4" Ø HOLES SHALL BE FORMED OR DRILLED WITH A CORE BIT. IMPACT TOOLS WILL NOT BE PERMITTED. ANY CONCRETE DAMAGED BY THIS WORK SHALL BE REPAIRED TO THE SATISFACTION OF THE ENGINEER.

THE C6 X 8.2 RUBRAIL IS TO BE ADHESIVELY ANCHORED TO THE RAIL USING THREE 3/4" Ø X 6" BOLTS WITH WASHERS. LEVEL ONE FIELD TESTING IS REQUIRED, AND THE YIELD LOAD OF THE 3/4" Ø BOLT IS 12 KIPS. FOR ADHESIVELY ANCHORED ANCHOR BOLTS OR DOWELS, SEE STANDARD SPECIFICATIONS. SEE ROADWAY STANDARD 862.03 FOR DETAILS AND LOCATION OF THE RUBRAIL.

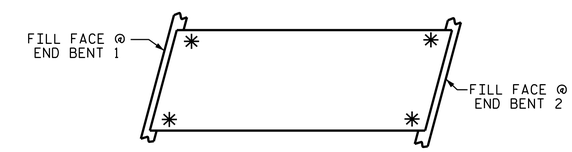

SKETCH SHOWING POINTS OF ATTACHMENTS

✳ DENOTES GUARDRAIL ANCHOR ASSEMBLY

PROJECT NO. B-5780

DAVIDSON COUNTY

STATION: 16+03.00 -L-

SHEET 2 OF 2

STATE OF NORTH CAROLINA
DEPARTMENT OF TRANSPORTATION
RALEIGH

STANDARD

GUARDRAIL ANCHORAGE FOR BARRIER RAIL

NORTH CAROLINA PROFESSIONAL SEAL 039349 ENGINEER JEREMY P. McCARTHA

DocuSigned by: Jeremy P. McCartha
F757FFCF9CBA420...
8/23/2016

DOCUMENT NOT CONSIDERED FINAL UNLESS ALL SIGNATURES COMPLETED

REVISIONS						
NO.	BY:	DATE:	NO.	BY:	DATE:	
1			3			
2			4			

SHEET NO. S-16

TOTAL SHEETS 28

STD. NO. GRA2

ASSEMBLED BY : J.P. MCCARTHA		DATE : 4/06/16	
CHECKED BY : H.A. LOCKLEAR		DATE : 5/01/16	
DRAWN BY : TLA 5/06	REV. 10/1/11	MAA/GM	
CHECKED BY : GM 5/06	REV. 7/12	MAA/GM	
	REV. 6/13	MAA/GM	

22-AUG-2016 10:08
R:\Structures\Plans\B5780_SMU_BR_01.dgn
jdhawk

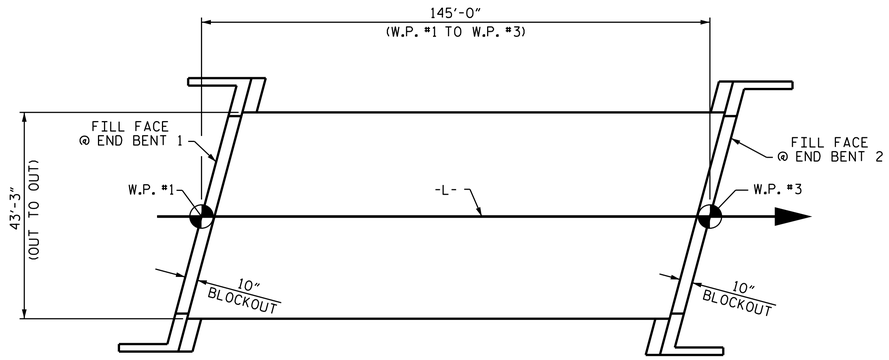

LAYOUT FOR COMPUTING AREA
REINFORCED CONCRETE DECK SLAB
(SQ. FT. = 6,271)

BAR TYPES

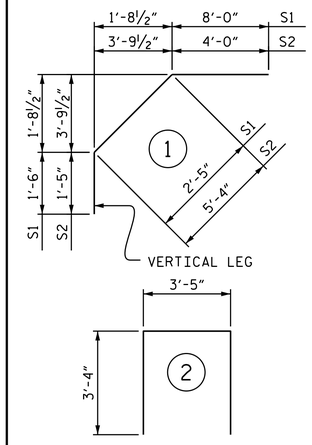

ALL BAR DIMENSIONS ARE OUT TO OUT.

REINFORCING BAR SCHEDULE

BAR	NO.	SIZE	TYPE	LENGTH	WEIGHT
✱ A1	263	#5	STR	42'-11"	11772
A2	263	#5	STR	42'-11"	11772
✱ A101	4	#5	STR	39'-11"	167
✱ A102	4	#5	STR	36'-3"	151
✱ A103	4	#5	STR	32'-6"	136
✱ A104	4	#5	STR	28'-9"	120
✱ A105	4	#5	STR	25'-0"	104
✱ A106	4	#5	STR	21'-4"	89
✱ A107	4	#5	STR	17'-7"	73
✱ A108	4	#5	STR	13'-10"	58
✱ A109	4	#5	STR	10'-1"	42
✱ A110	4	#5	STR	6'-4"	26
✱ A111	4	#5	STR	2'-8"	11
A201	4	#5	STR	39'-11"	167
A202	4	#5	STR	36'-3"	151
A203	4	#5	STR	32'-6"	136
A204	4	#5	STR	28'-9"	120
A205	4	#5	STR	25'-0"	104
A206	4	#5	STR	21'-4"	89
A207	4	#5	STR	17'-7"	73
A208	4	#5	STR	13'-10"	58
A209	4	#5	STR	10'-1"	42
A210	4	#5	STR	6'-4"	26
A211	4	#5	STR	2'-8"	11

REINFORCING BAR SCHEDULE

BAR	NO.	SIZE	TYPE	LENGTH	WEIGHT
✱ B1	6	#5	STR	49'-11"	312
✱ B2	226	#5	STR	14'-10"	3496
✱ B3	58	#4	STR	24'-9"	959
✱ B4	113	#5	STR	21'-9"	2563
✱ B5	58	#4	STR	26'-11"	1043
B6	150	#5	STR	49'-2"	7692
K1	20	#4	STR	22'-4"	298
K2	8	#4	STR	7'-10"	42
K3	8	#4	STR	7'-4"	39
K4	16	#4	STR	8'-7"	92
K5	8	#4	STR	8'-3"	44
K6	4	#4	STR	2'-2"	6
K7	4	#4	STR	1'-11"	5
K8	8	#4	STR	2'-7"	14
K9	4	#4	STR	2'-5"	6
✱ S1	72	#4	1	11'-11"	573
✱ S2	68	#4	1	10'-9"	488
S3	72	#4	2	10'-1"	485

REINFORCING STEEL	LBS.	21,472
✱ EPOXY COATED REINFORCING STEEL	LBS.	22,183

—SUPERSTRUCTURE BILL OF MATERIAL—

	CLASS AA CONCRETE	REINFORCING STEEL	EPOXY COATED REINFORCING STEEL
	(CU. YDS.)	(LBS.)	(LBS.)
POUR #1	167.9	21,472	22,183
POUR #2	10.5		
POUR #3	62.3		
TOTALS✱✱	240.7	21,472	22,183

✱✱QUANTITIES FOR CONCRETE BARRIER RAILS ARE NOT INCLUDED.

GROOVING BRIDGE FLOORS

APPROACH SLABS	1,046 SQ.FT.
BRIDGE DECK	5,288 SQ.FT.
TOTAL	6,334 SQ.FT.

SPLICE CHART

BAR SIZE	EPOXY COATED	UNCOATED
#4	2'-0"	1'-9"
#5	2'-6"	2'-2"

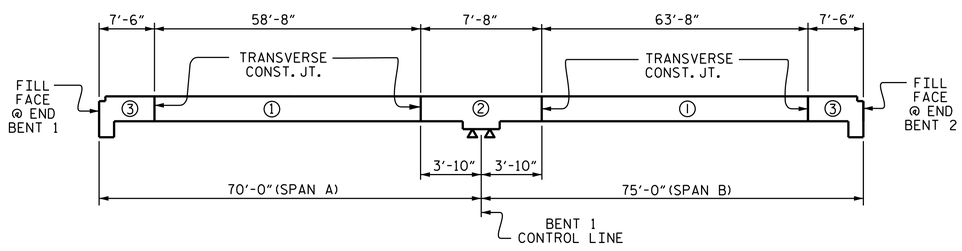

POUR SEQUENCE

PROJECT NO. B-5780
DAVIDSON COUNTY
STATION: 16+03.00 -L-

NORTH CAROLINA PROFESSIONAL SEAL 039349 ENGINEER JEREMY P. MCCARTHA

DocuSigned by: Jeremy P. McCartha
F757FFCF9CBA420...
8/23/2016

STATE OF NORTH CAROLINA
DEPARTMENT OF TRANSPORTATION
RALEIGH

SUPERSTRUCTURE
BILL OF MATERIAL

DOCUMENT NOT CONSIDERED FINAL UNLESS ALL SIGNATURES COMPLETED

REVISIONS							
NO.	BY:	DATE:	NO.	BY:	DATE:	SHEET NO.	S-17
1			3			TOTAL SHEETS	28
2			4				

DRAWN BY :	J.P. MCCARTHA	DATE:	3/29/16
CHECKED BY :	H.A. LOCKLEAR	DATE:	5/01/16
DESIGN ENGINEER OF RECORD :	J.P. MCCARTHA	DATE:	7/28/16

23-AUG-2016 08:29
R:\Structures\Plans\B5780_SMU_BM_01.dgn
vpatel

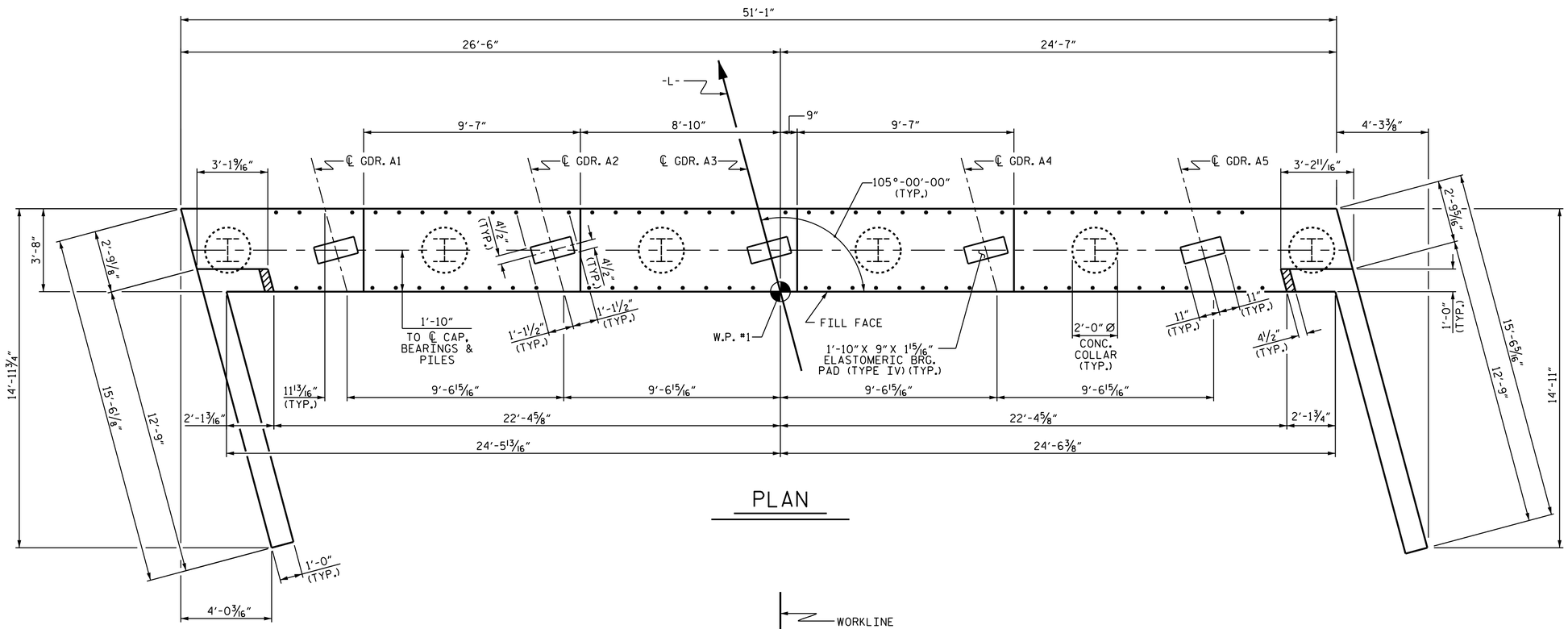

PLAN

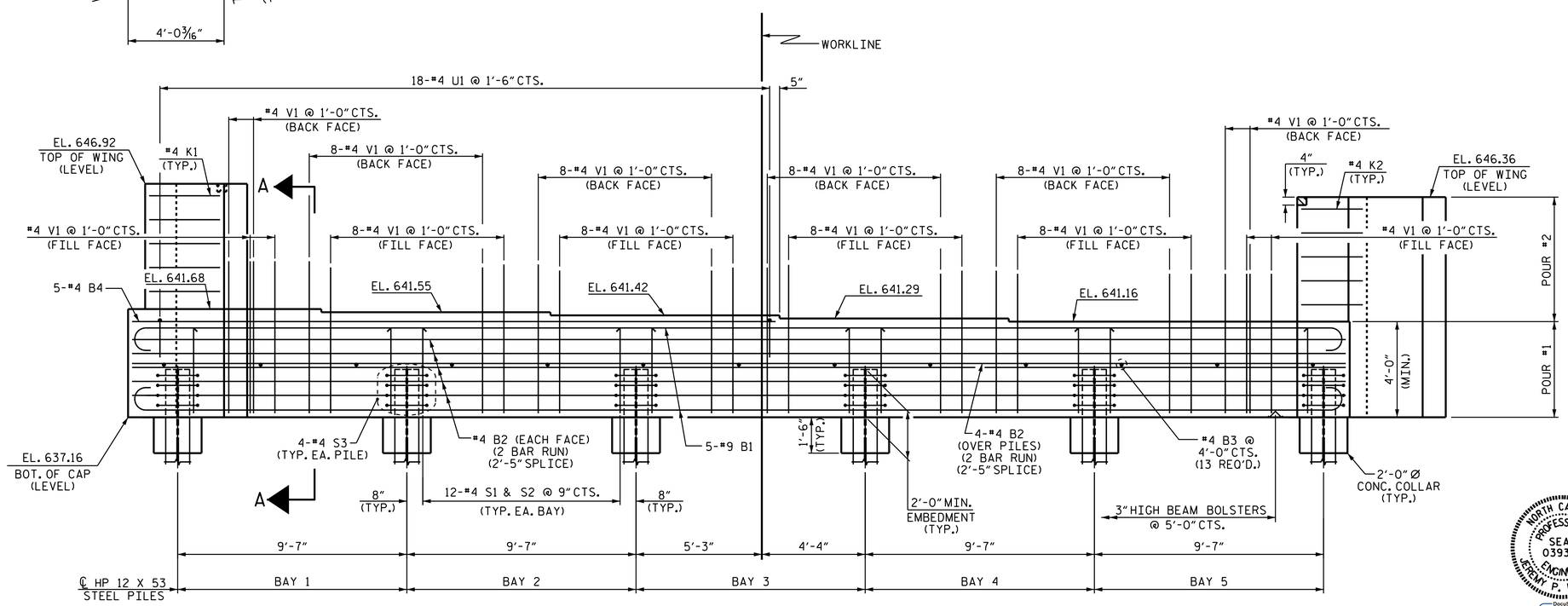

ELEVATION

FOR SECTION A-A, SEE SHEET 3 OF 3.

NOTES

THE TOP SURFACE OF THE END BENT CAP AND WINGS, EXCEPT TO THE BEARING AREA, SHALL BE RAKED TO A DEPTH OF 1/4".

THE CONCRETE IN THE SHADED AREA OF THE WING SHALL BE POURED AFTER THE CONCRETE BARRIER RAIL IS CAST IF SLIP FORMING IS USED.

INSTALL THE 4" DIA. DRAIN PIPE THROUGH THE WING WALL AS REQUIRED FOR REINFORCED BRIDGE APPROACH FILLS. SEE THE ROADWAY PLANS. REINFORCING STEEL IN THE WING WALL MAY BE SHIFTED AS NECESSARY TO CLEAR THE DRAIN PIPE.

FOR WING DETAILS, SEE SHEET 2 OF 3.

FOR PILE SPLICE DETAILS, SEE SHEET 3 OF 3.

PROJECT NO. B-5780

DAVIDSON COUNTY

STATION: 16+03.00 -L-

SHEET 1 OF 3

STATE OF NORTH CAROLINA
DEPARTMENT OF TRANSPORTATION
RALEIGH

SUBSTRUCTURE

INTEGRAL END BENT 1

NORTH CAROLINA PROFESSIONAL SEAL 039349 ENGINEER JEREMY P. McCARTHA

DocuSigned by: Jeremy P. McCartha
F757FFCF9CBA420...
8/23/2016

DOCUMENT NOT CONSIDERED FINAL UNLESS ALL SIGNATURES COMPLETED

REVISIONS						SHEET NO.
NO.	BY:	DATE:	NO.	BY:	DATE:	S-18
1			3			TOTAL SHEETS
2			4			28

DRAWN BY : J.P. MCCARTHA DATE : 5/26/16
CHECKED BY : K.D. LAYNE DATE : 6/14/16
DESIGN ENGINEER OF RECORD: J.P. MCCARTHA DATE : 7/28/16

22-AUG-2016 10:08
R:\Structures\Plans\B5780_SMU_E*_01.dgn
jdhawk

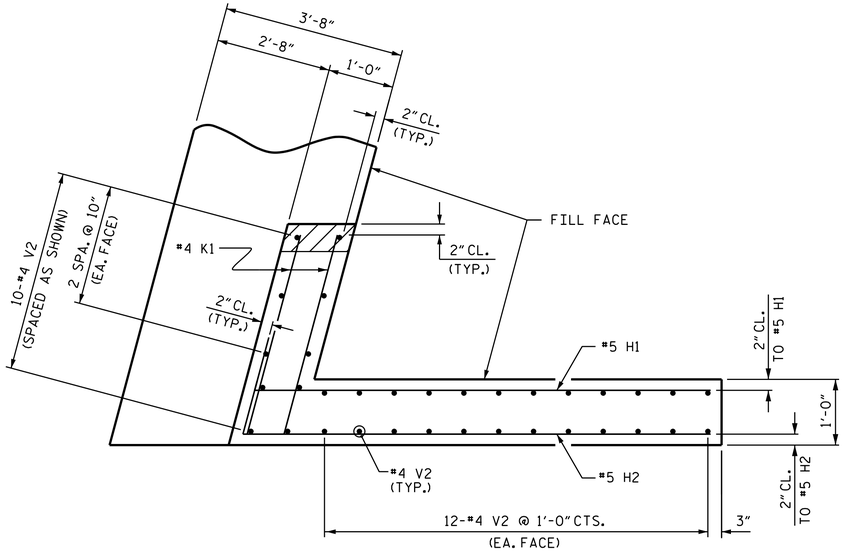

PLAN OF LEFT WING

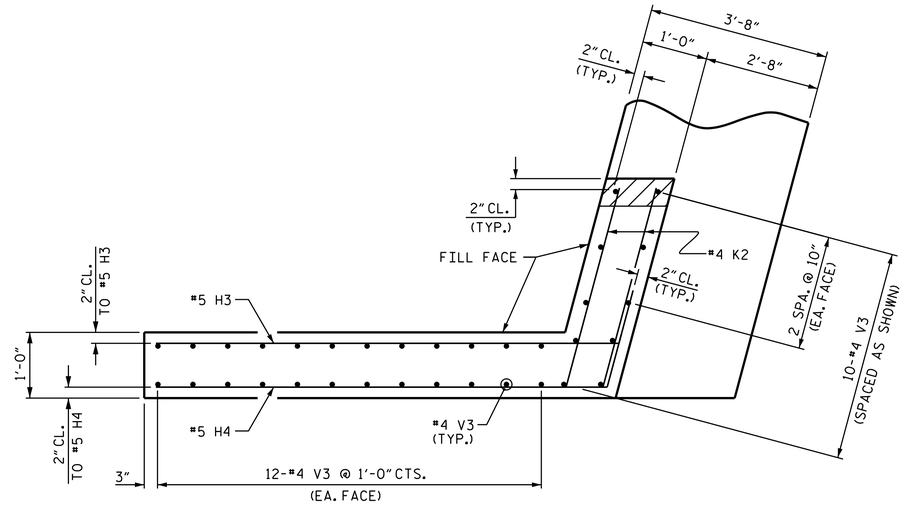

PLAN OF RIGHT WING

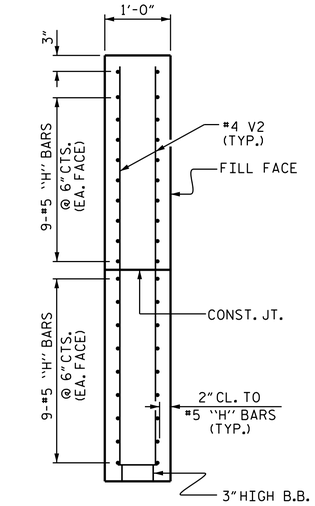

SECTION X-X

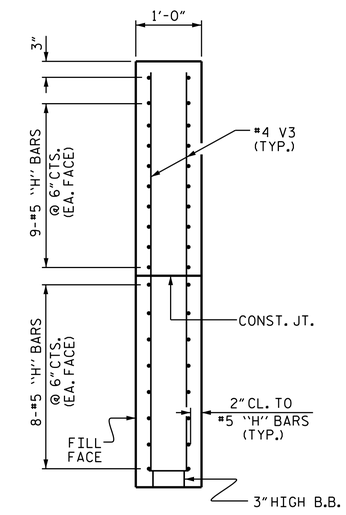

SECTION Y-Y

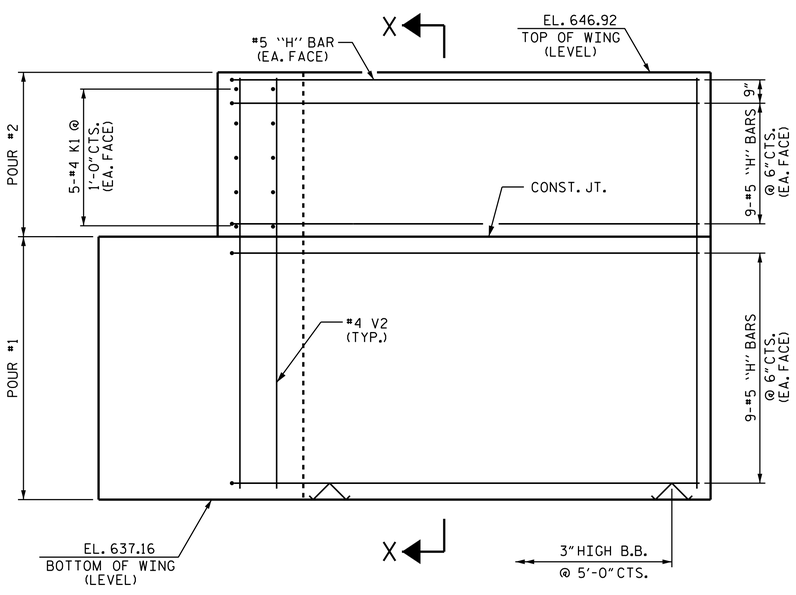

ELEVATION OF LEFT WING

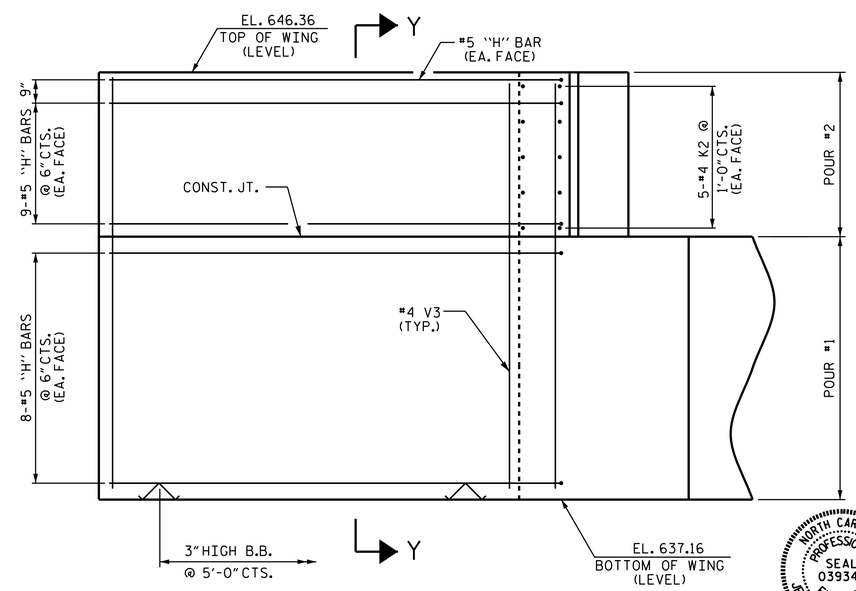

ELEVATION OF RIGHT WING

WING DETAILS

PROJECT NO. B-5780

DAVIDSON COUNTY

STATION: 16+03.00 -L-

SHEET 2 OF 3

STATE OF NORTH CAROLINA
DEPARTMENT OF TRANSPORTATION
RALEIGH

SUBSTRUCTURE
INTEGRAL
END BENT 1

NORTH CAROLINA PROFESSIONAL SEAL 039349 ENGINEER JEREMY P. MCCARTHA

DocuSigned by: Jeremy P. McCartha
F757FFCF9CB8420...
8/23/2016

DOCUMENT NOT CONSIDERED FINAL UNLESS ALL SIGNATURES COMPLETED

REVISIONS							
NO.	BY:	DATE:	NO.	BY:	DATE:	SHEET NO.	S-19
1			3			TOTAL SHEETS	28
2			4				

ASSEMBLED BY :	J.P. MCCARTHA	DATE : 5/26/16
CHECKED BY :	K.D. LAYNE	DATE : 6/14/16
DESIGN ENGINEER OF RECORD :	J.P. MCCARTHA	DATE : 7/28/16

22-AUG-2016 10:08
R:\Structures\Plans\B5780_SMU_E*_01.dgn
jdhawk

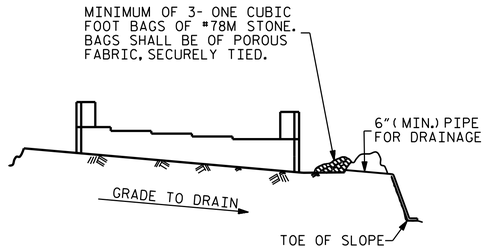

BAGGED STONE AND PIPE SHALL BE PLACED IMMEDIATELY AFTER COMPLETION OF END BENT EXCAVATION. PIPE MAY BE EITHER CONCRETE, CORRUGATED STEEL, CORRUGATED ALUMINUM ALLOY, OR CORRUGATED PLASTIC. PERFORATED PIPE WILL NOT BE ALLOWED.

BAGGED STONE SHALL REMAIN IN PLACE UNTIL THE ENGINEER DIRECTS THAT IT BE REMOVED. THE CONTRACTOR SHALL REMOVE AND DISPOSE OF SILT ACCUMULATIONS AT BAGGED STONE WHEN SO DIRECTED BY THE ENGINEER. BAGS SHALL BE REMOVED AND REPLACED WHENEVER THE ENGINEER DETERMINES THAT THEY HAVE DETERIORATED AND LOST THEIR EFFECTIVENESS.

NO SEPARATE PAYMENT WILL BE MADE FOR THIS WORK AND THE ENTIRE COST OF THIS WORK SHALL BE INCLUDED IN THE UNIT CONTRACT PRICE BID FOR THE SEVERAL PAY ITEMS.

TEMPORARY DRAINAGE AT END BENT

BAR TYPES

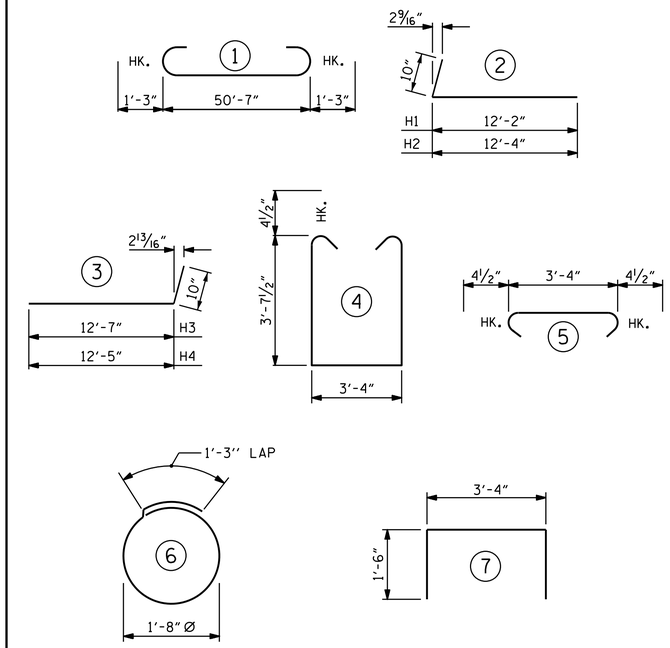

ALL BAR DIMENSIONS ARE OUT TO OUT.

BILL OF MATERIAL

INTEGRAL END BENT 1

BAR	NO.	SIZE	TYPE	LENGTH	WEIGHT
B1	10	#9	1	53'-1"	1805
B2	28	#4	STR	26'-7"	497
B3	13	#4	STR	3'-4"	29
B4	5	#4	STR	25'-11"	87
H1	19	#5	2	13'-0"	258
H2	19	#5	2	13'-2"	261
H3	18	#5	3	13'-5"	252
H4	18	#5	3	13'-3"	249
K1	10	#4	STR	2'-9"	18
K2	10	#4	STR	2'-10"	19
S1	60	#4	4	11'-4"	454
S2	60	#4	5	4'-1"	164
S3	24	#4	6	6'-6"	104
U1	18	#4	7	6'-4"	76
V1	72	#4	STR	6'-4"	305
V2	34	#4	STR	9'-5"	214
V3	34	#4	STR	8'-10"	201

REINFORCING STEEL LBS. 4,993

CLASS A CONCRETE

POUR #1	CAP, LOWER WINGS & CONC. COLLARS	C.Y.	34.2
POUR #2	UPPER PART OF WINGS	C.Y.	5.6
TOTAL CLASS A CONCRETE		C.Y.	39.8

HP 12 X 53 STEEL PILES
NO: 6 LIN. FT. 120

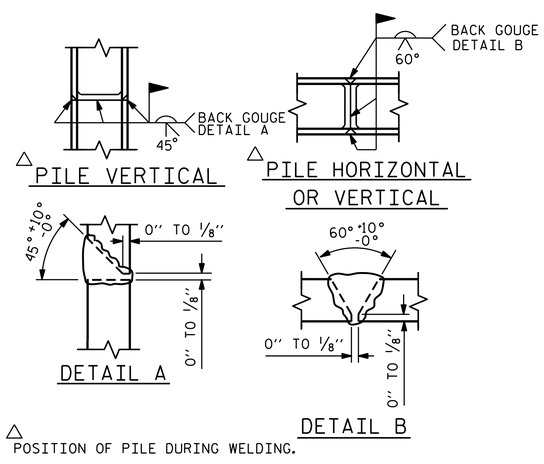

PILE SPLICE DETAILS

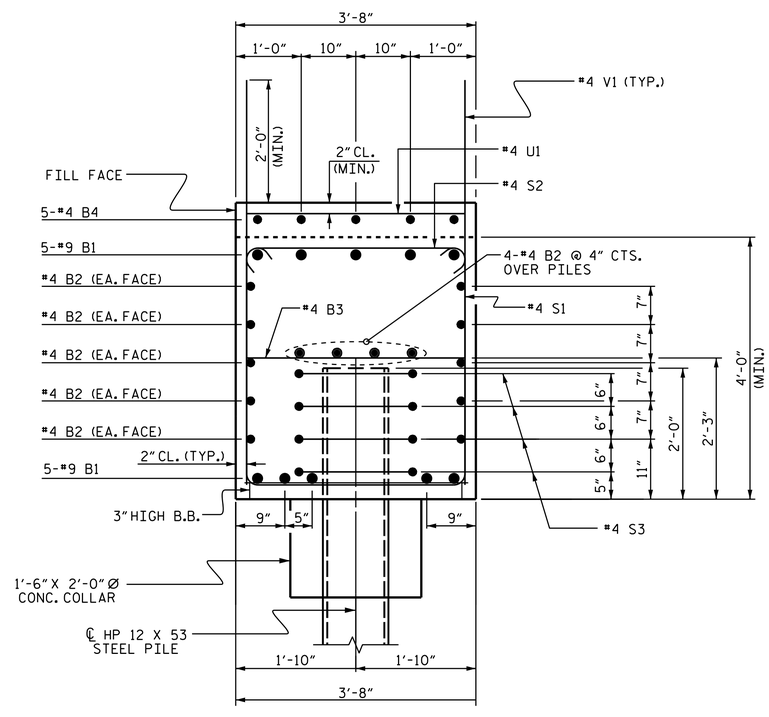

SECTION A-A

PROJECT NO. B-5780
DAVIDSON COUNTY
STATION: 16+03.00 -L-

SHEET 3 OF 3

STATE OF NORTH CAROLINA
DEPARTMENT OF TRANSPORTATION
RALEIGH

SUBSTRUCTURE

INTEGRAL END BENT 1

NORTH CAROLINA PROFESSIONAL SEAL 039349 ENGINEER JEREMY P. McCARTHA

DocuSigned by: Jeremy P. McCartha
F757FFCF9CBA420...
8/23/2016

DOCUMENT NOT CONSIDERED FINAL UNLESS ALL SIGNATURES COMPLETED

REVISIONS							
NO.	BY:	DATE:	NO.	BY:	DATE:	SHEET NO.	S-20
1			3			TOTAL SHEETS	28
2			4				

DRAWN BY : J.P. MCCARTHA DATE : 5/26/16
CHECKED BY : K.D. LAYNE DATE : 6/14/16
DESIGN ENGINEER OF RECORD: J.P. MCCARTHA DATE : 7/28/16

22-AUG-2016 10:08
R:\Structures\Plans\B5780_SMU_E*_01.dgn
jdhawk

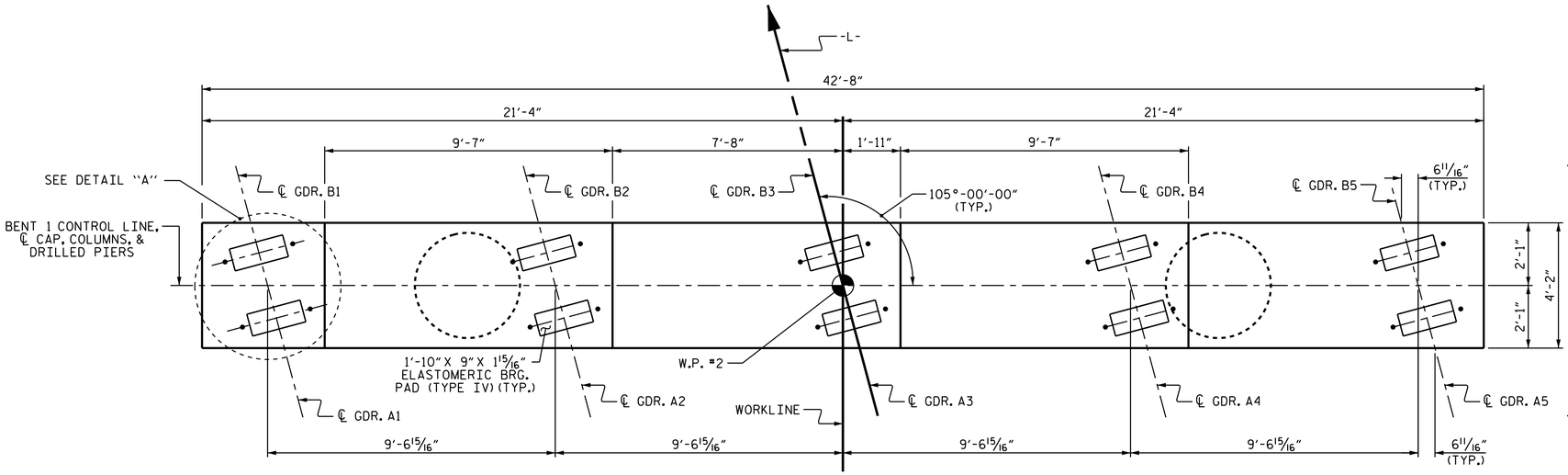

PLAN

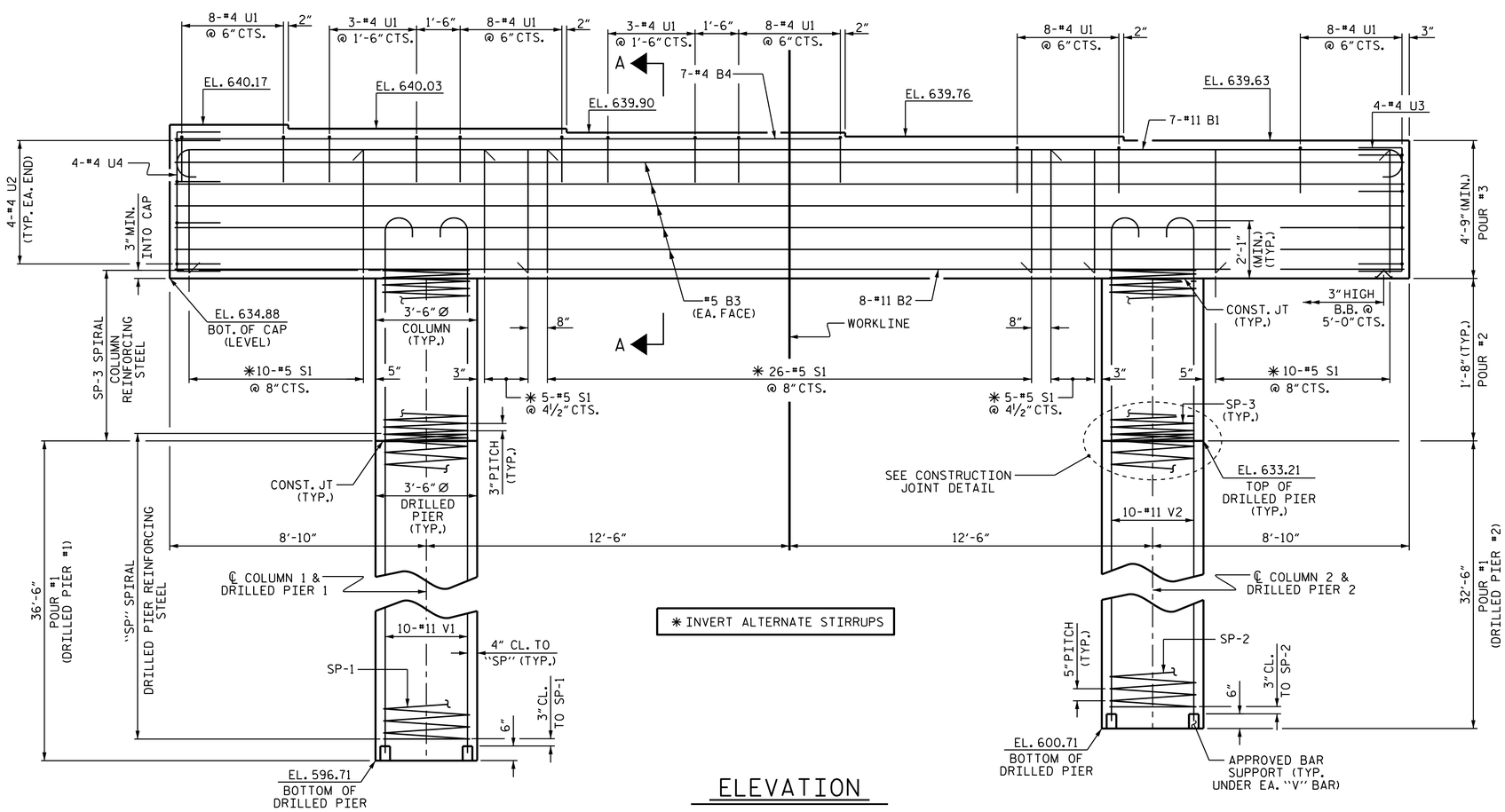

ELEVATION

NOTES

STIRRUPS AND "U" BARS IN CAP MAY BE SHIFTED AS NECESSARY TO CLEAR ANCHOR BOLTS.

HOOKS ON "V" BARS MAY BE TURNED AS NECESSARY FOR PLACING REINFORCING STEEL.

FOR DRILLED PIERS, SEE GEOTECHNICAL SPECIAL PROVISIONS AND SECTION 411 OF THE STANDARD SPECIFICATIONS.

ALL STEEL IN THE DRILLED PIERS IS INCLUDED IN THE PAY ITEMS FOR "REINFORCING STEEL" AND "SPIRAL COLUMN REINFORCING STEEL".

THE LOCATION OF THE CONSTRUCTION JOINT IN THE DRILLED PIERS IS BASED ON AN APPROXIMATE GROUND LINE ELEVATION. IF THE CONSTRUCTION JOINT IS ABOVE THE ACTUAL GROUND LINE ELEVATION, THE CONTRACTOR SHALL PLACE THE CONSTRUCTION JOINT ONE FOOT BELOW THE GROUND LINE.

THE CONTRACTOR'S ATTENTION IS CALLED TO THE FACT THAT THE LONGITUDINAL REINFORCEMENT FOR THE DRILLED PIERS IS DETAILED WITH 3 FEET OF EXTRA LENGTH.

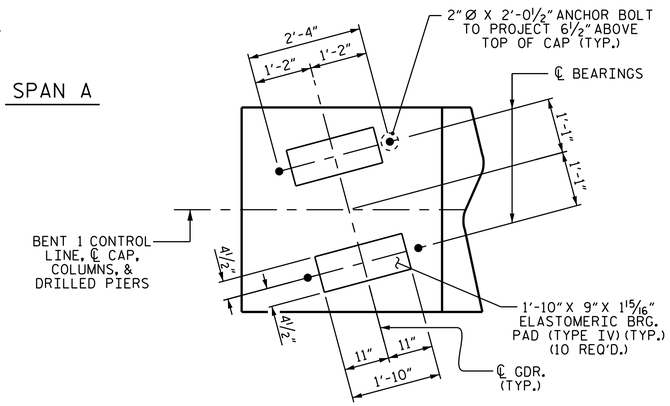

DETAIL "A"

DIMENSIONS ARE TYPICAL FOR EACH BEARING.

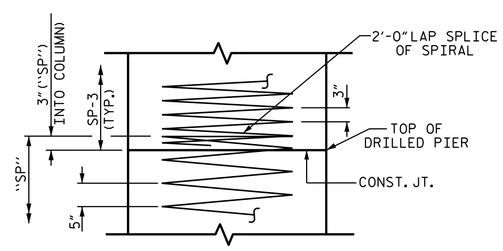

CONSTRUCTION JOINT DETAIL

PROJECT NO. B-5780

DAVIDSON COUNTY

STATION: 16+03.00 -L-

SHEET 1 OF 2

STATE OF NORTH CAROLINA
DEPARTMENT OF TRANSPORTATION
RALEIGH

SUBSTRUCTURE

BENT 1

NORTH CAROLINA PROFESSIONAL SEAL 039349 ENGINEER JEREMY P. McCARTHA

DocuSigned by: Jeremy P. McCartha
F757FFCF9CBA420...
8/23/2016

DOCUMENT NOT CONSIDERED FINAL UNLESS ALL SIGNATURES COMPLETED

REVISIONS								SHEET NO.
NO.	BY:	DATE:	NO.	BY:	DATE:			S-21
1			3					TOTAL SHEETS
2			4					28

DRAWN BY :	J.P. MCCARTHA	DATE :	5/18/16
CHECKED BY :	K.D. LAYNE	DATE :	6/13/16
DESIGN ENGINEER OF RECORD:	J.P. MCCARTHA	DATE :	7/28/16

22-AUG-2016 10:08
R:\Structures\Plans\B5780_SMU_B*_01.dgn
jdhawk

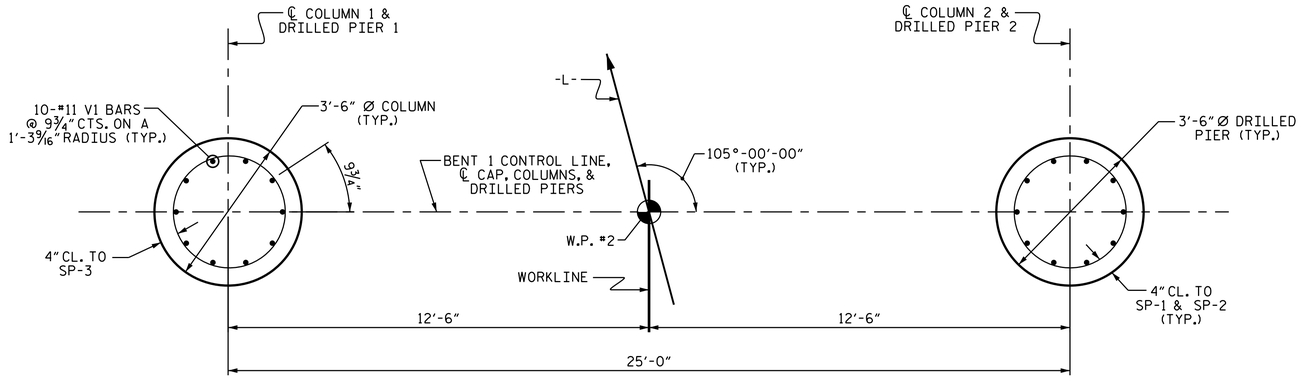

PLAN OF DRILLED PIERS & COLUMNS

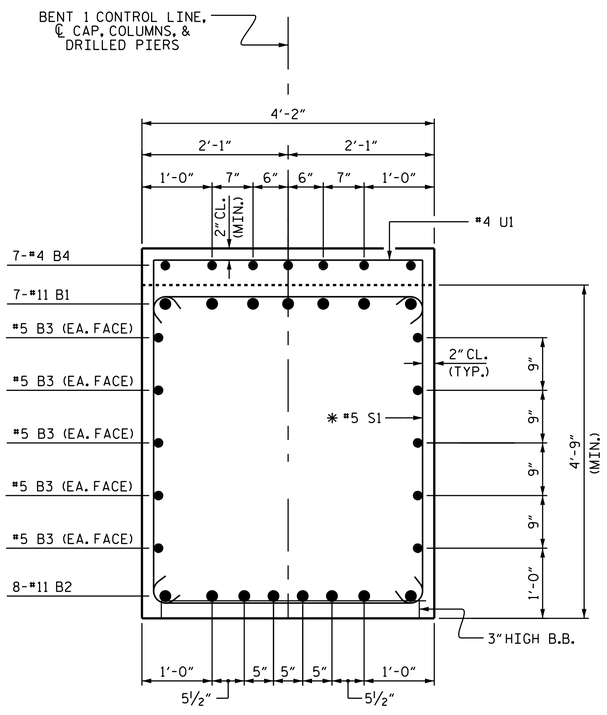

SECTION A-A

✱ INVERT ALTERNATE STIRRUPS

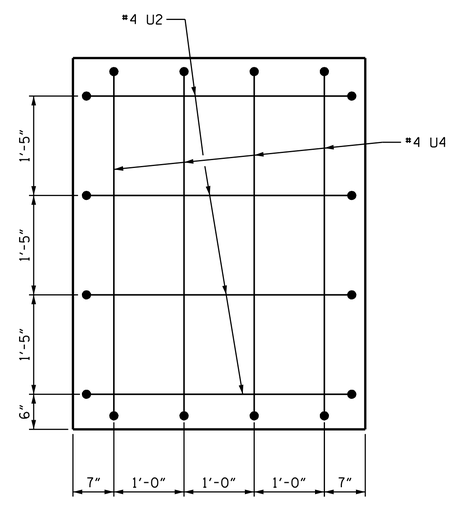

LEFT END OF CAP DETAIL

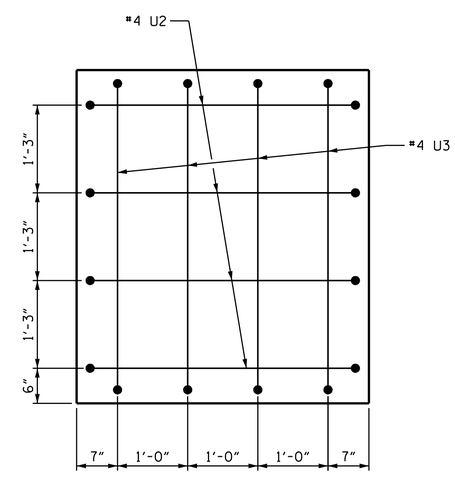

RIGHT END OF CAP DETAIL

BAR TYPES

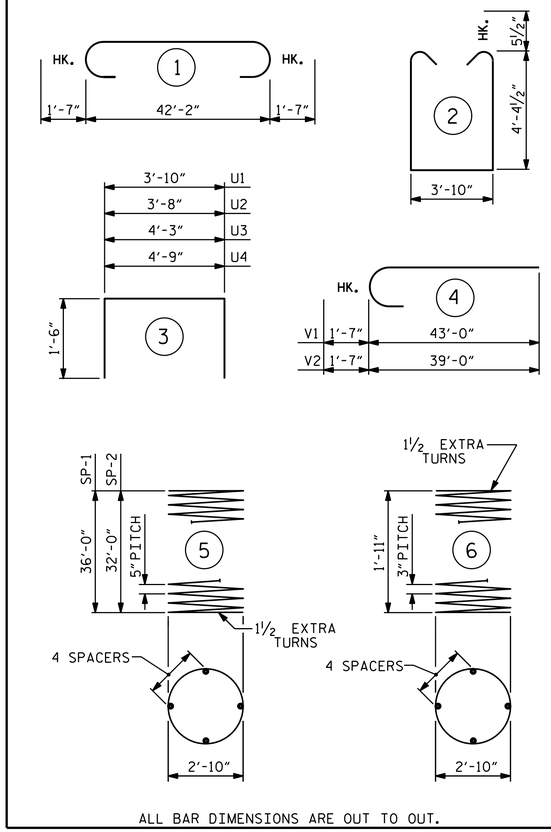

ALL BAR DIMENSIONS ARE OUT TO OUT.

BILL OF MATERIAL

BAR	NO.	SIZE	TYPE	LENGTH	WEIGHT
B1	7	#11	1	45'-4"	1686
B2	8	#11	STR	42'-4"	1799
B3	10	#5	STR	42'-4"	442
B4	7	#4	STR	22'-11"	107
S1	56	#5	2	13'-6"	789
U1	46	#4	3	6'-10"	210
U2	8	#4	3	6'-8"	36
U3	4	#4	3	7'-3"	19
U4	4	#4	3	7'-9"	21
V1	10	#11	4	44'-7"	2369
V2	10	#11	4	40'-7"	2156
REINFORCING STEEL				LBS.	9,634
SP-1	1	✱✱	5	769'-10"	803
SP-2	1	✱✱	5	686'-9"	716
SP-3	2	✱	6	81'-2"	108
SPIRAL COLUMN REINFORCING STEEL				LBS.	1,627

✱ THE SP-3 SPIRAL REINFORCING STEEL SHALL BE W20 OR D-20 COLD DRAWN WIRE OR #4 PLAIN OR DEFORMED BAR.

✱✱ THE SP-1 & SP-2 SPIRAL REINFORCING STEEL SHALL BE W31 OR D-31 COLD DRAWN WIRE OR #5 PLAIN OR DEFORMED BAR.

CLASS A CONCRETE		
POUR #2 (COLUMNS)	C.Y.	1.2
POUR #3 (CAP)	C.Y.	32.8
TOTAL CLASS A CONCRETE	C.Y.	34.0
DRILLED PIER QUANTITIES		
DRILLED PIER CONCRETE		
POUR #1 (DRILLED PIERS)	C.Y.	24.6
3'-6" Ø DRILLED PIERS IN SOIL	LIN. FT.	44
3'-6" Ø DRILLED PIERS NOT IN SOIL	LIN. FT.	25
PERMANENT STEEL CASING FOR 3'-6" Ø DRILLED PIER	LIN. FT.	38
CSL TESTING	EACH	1
CSL TUBES	LIN. FT.	288

PROJECT NO. B-5780

DAVIDSON COUNTY

STATION: 16+03.00 -L-

SHEET 2 OF 2

STATE OF NORTH CAROLINA
DEPARTMENT OF TRANSPORTATION
RALEIGH

SUBSTRUCTURE

BENT 1

NORTH CAROLINA PROFESSIONAL SEAL 039349 ENGINEER JEREMY P. McCARTHA

DocuSigned by: Jeremy P. McCartha
F757FFCF9CBA420...
8/23/2016

DRAWN BY : J.P. MCCARTHA DATE : 5/20/16
CHECKED BY : K.D. LAYNE DATE : 6/13/16
DESIGN ENGINEER OF RECORD: J.P. MCCARTHA DATE : 7/28/16

DOCUMENT NOT CONSIDERED FINAL UNLESS ALL SIGNATURES COMPLETED

REVISIONS							
NO.	BY:	DATE:	NO.	BY:	DATE:	SHEET NO.	S-22
1			3			TOTAL SHEETS	28
2			4				

22-AUG-2016 10:08
R:\Structures\Plans\B5780_SMU_B*_01.dgn
jdhawk

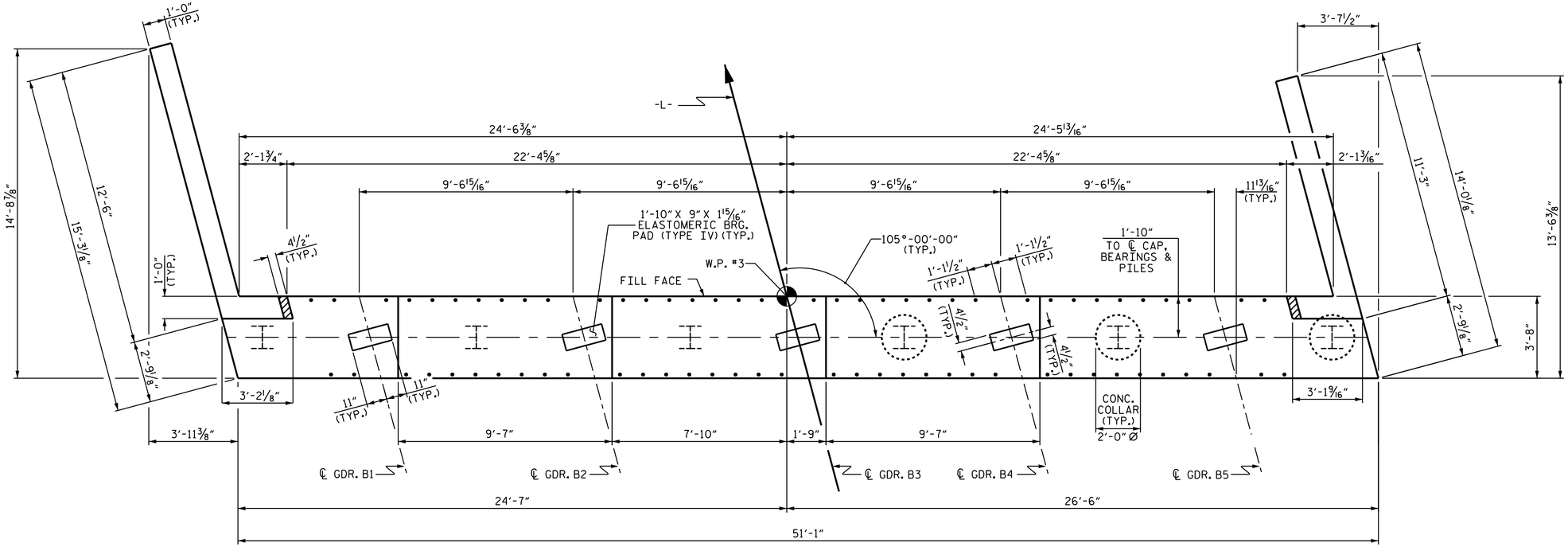

PLAN

NOTES

THE TOP SURFACE OF THE END BENT CAP AND WINGS, EXCEPT TO THE BEARING AREA, SHALL BE RAKED TO A DEPTH OF 1/4".

THE CONCRETE IN THE SHADED AREA OF THE WING SHALL BE POURED AFTER THE CONCRETE BARRIER RAIL IS CAST IF SLIP FORMING IS USED.

INSTALL THE 4" DIA. DRAIN PIPE THROUGH THE WING WALL AS REQUIRED FOR REINFORCED BRIDGE APPROACH FILLS. SEE THE ROADWAY PLANS. REINFORCING STEEL IN THE WING WALL MAY BE SHIFTED AS NECESSARY TO CLEAR THE DRAIN PIPE.

FOR WING DETAILS, SEE SHEET 2 OF 3.

FOR PILE SPLICE DETAILS, SEE SHEET 3 OF 3.

NO CONCRETE COLLARS FOR LEFT THREE PILES.

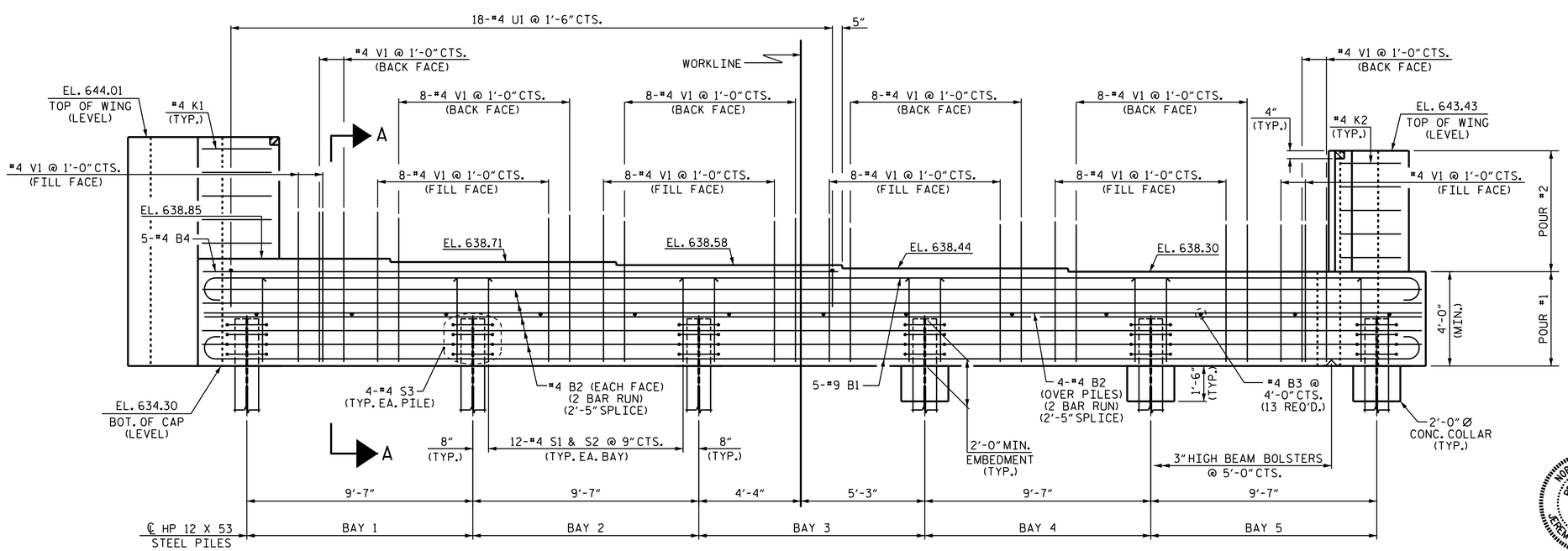

ELEVATION

FOR SECTION A-A, SEE SHEET 3 OF 3.

PROJECT NO. B-5780

DAVIDSON COUNTY

STATION: 16+03.00 -L-

SHEET 1 OF 3

STATE OF NORTH CAROLINA
DEPARTMENT OF TRANSPORTATION
RALEIGH

SUBSTRUCTURE

INTEGRAL END BENT 2

NORTH CAROLINA PROFESSIONAL SEAL 039349 ENGINEER JEREMY P. McCARTHA

DocuSigned by: Jeremy P. McCartha F757FFCF9CBA420...

8/23/2016

DOCUMENT NOT CONSIDERED FINAL UNLESS ALL SIGNATURES COMPLETED

REVISIONS							
NO.	BY:	DATE:	NO.	BY:	DATE:	SHEET NO.	
1			3			S-23	
2			4			TOTAL SHEETS	
						28	

DRAWN BY :	J.P. MCCARTHA	DATE :	5/11/16
CHECKED BY :	K.D. LAYNE	DATE :	6/14/16
DESIGN ENGINEER OF RECORD:	J.P. MCCARTHA	DATE :	7/28/16

22-AUG-2016 10:08
R:\Structures\Plans\B5780_SMU_E*_01.dgn
jdhawk

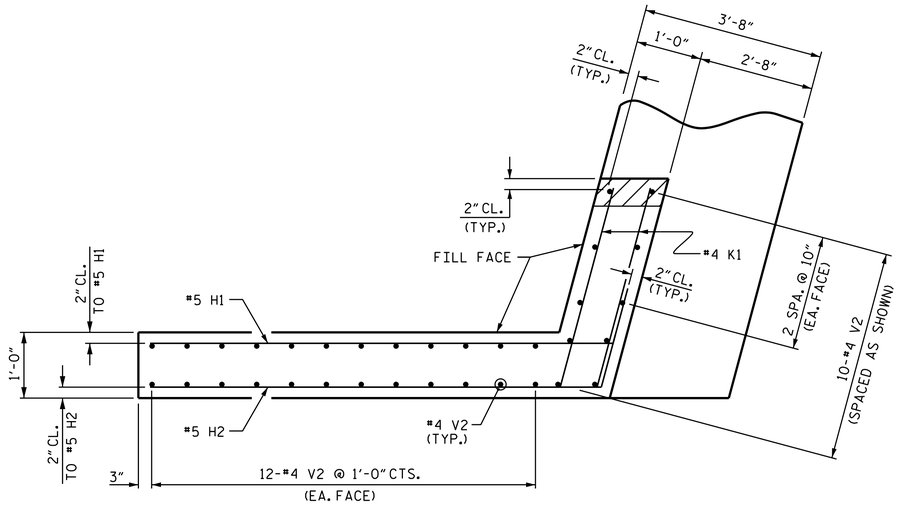

PLAN OF LEFT WING

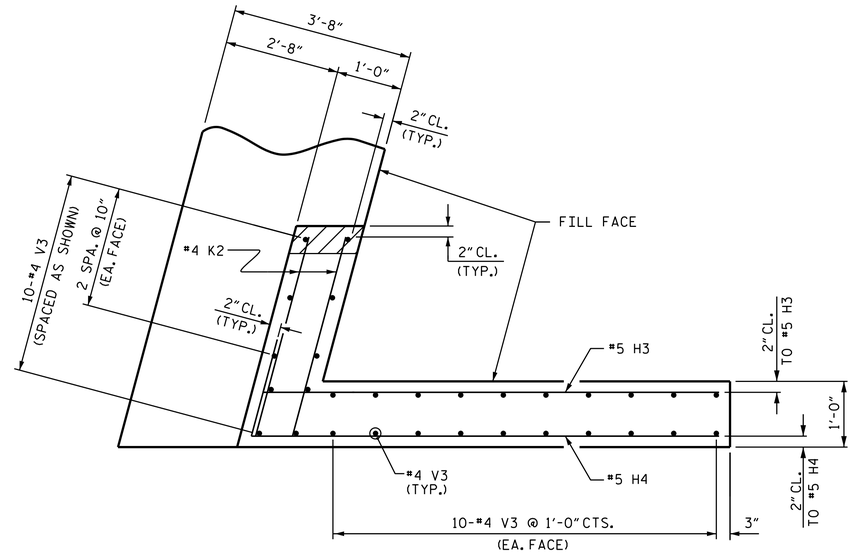

PLAN OF RIGHT WING

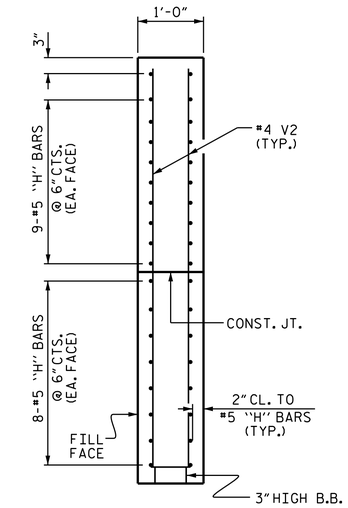

SECTION X-X

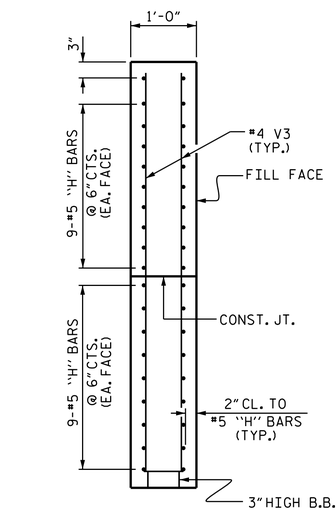

SECTION Y-Y

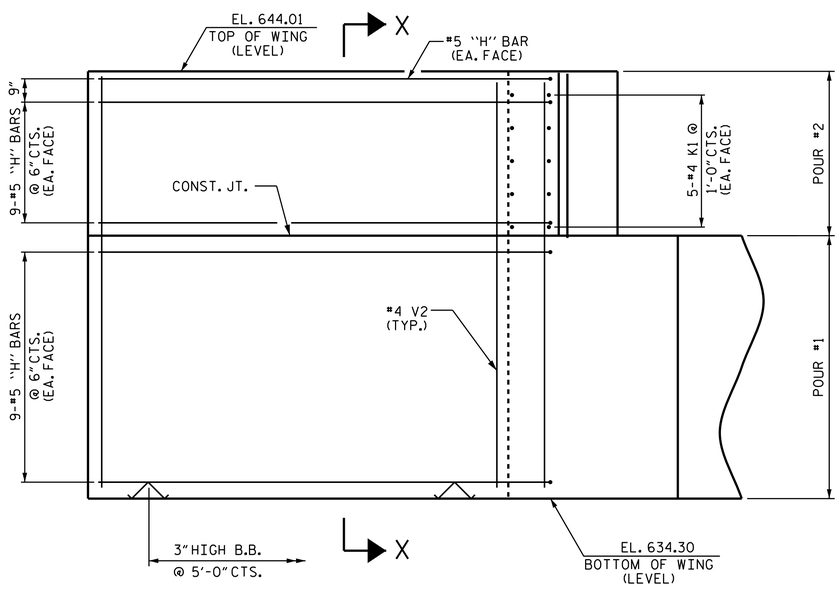

ELEVATION OF LEFT WING

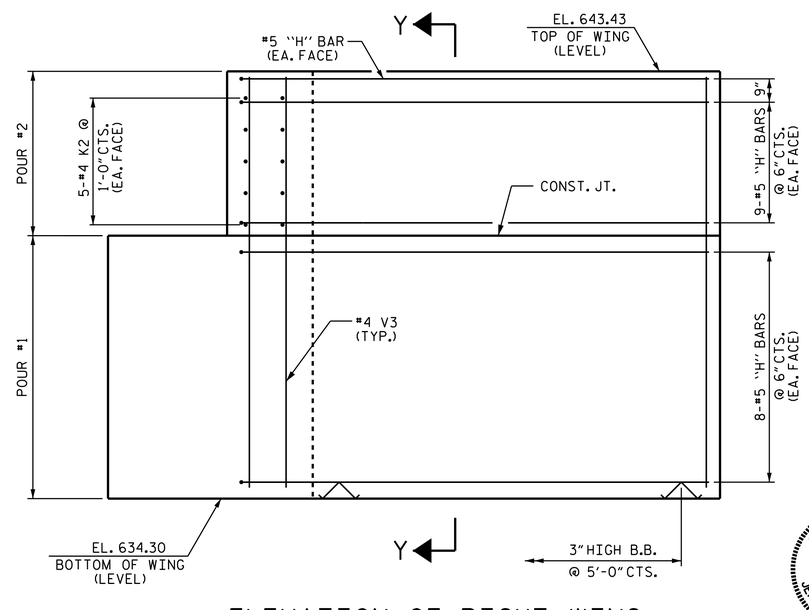

ELEVATION OF RIGHT WING

WING DETAILS

PROJECT NO. B-5780

DAVIDSON COUNTY

STATION: 16+03.00 -L-

SHEET 2 OF 3

STATE OF NORTH CAROLINA
DEPARTMENT OF TRANSPORTATION
RALEIGH

SUBSTRUCTURE
INTEGRAL
END BENT 2

NORTH CAROLINA PROFESSIONAL SEAL 039349 ENGINEER JEREMY P. McCARTHA

DocuSigned by: Jeremy P. McCartha
F757FFCF9CBA420...
8/23/2016

DOCUMENT NOT CONSIDERED FINAL UNLESS ALL SIGNATURES COMPLETED

REVISIONS						SHEET NO.
NO.	BY:	DATE:	NO.	BY:	DATE:	S-24
1			3			TOTAL SHEETS
2			4			28

ASSEMBLED BY : J.P. MCCARTHA DATE : 5/26/16
CHECKED BY : K.D. LAYNE DATE : 6/14/16
DESIGN ENGINEER OF RECORD : J.P. MCCARTHA DATE : 7/28/16

22-AUG-2016 10:08
R:\Structures\Plans\B5780_SMU_E*_01.dgn
jdhawk

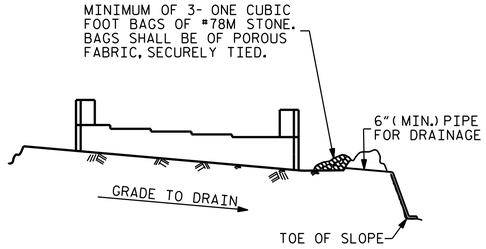

BAGGED STONE AND PIPE SHALL BE PLACED IMMEDIATELY AFTER COMPLETION OF END BENT EXCAVATION. PIPE MAY BE EITHER CONCRETE, CORRUGATED STEEL, CORRUGATED ALUMINUM ALLOY, OR CORRUGATED PLASTIC. PERFORATED PIPE WILL NOT BE ALLOWED.

BAGGED STONE SHALL REMAIN IN PLACE UNTIL THE ENGINEER DIRECTS THAT IT BE REMOVED. THE CONTRACTOR SHALL REMOVE AND DISPOSE OF SILT ACCUMULATIONS AT BAGGED STONE WHEN SO DIRECTED BY THE ENGINEER. BAGS SHALL BE REMOVED AND REPLACED WHENEVER THE ENGINEER DETERMINES THAT THEY HAVE DETERIORATED AND LOST THEIR EFFECTIVENESS.

NO SEPARATE PAYMENT WILL BE MADE FOR THIS WORK AND THE ENTIRE COST OF THIS WORK SHALL BE INCLUDED IN THE UNIT CONTRACT PRICE BID FOR THE SEVERAL PAY ITEMS.

TEMPORARY DRAINAGE AT END BENT

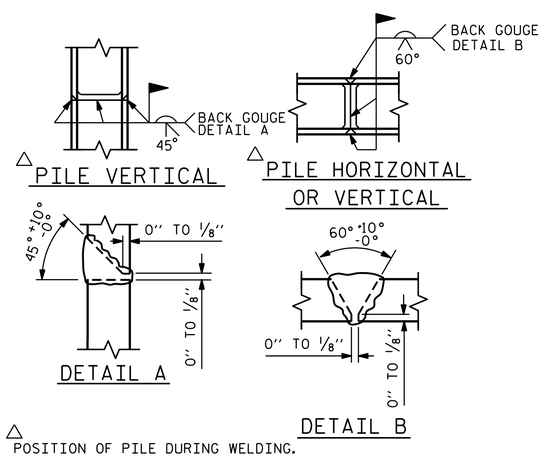

PILE SPLICE DETAILS

BAR TYPES

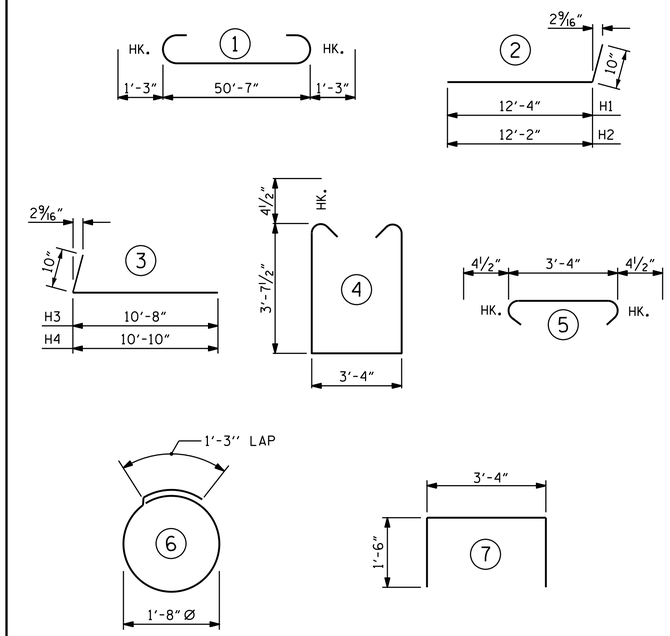

ALL BAR DIMENSIONS ARE OUT TO OUT.

BILL OF MATERIAL

INTEGRAL END BENT 2

BAR	NO.	SIZE	TYPE	LENGTH	WEIGHT
B1	10	#9	1	53'-1"	1805
B2	28	#4	STR	26'-7"	497
B3	13	#4	STR	3'-4"	29
B4	5	#4	STR	25'-11"	87
H1	19	#5	2	13'-2"	261
H2	19	#5	2	13'-0"	258
H3	18	#5	3	11'-6"	216
H4	18	#5	3	11'-8"	219
K1	10	#4	STR	2'-10"	19
K2	10	#4	STR	2'-9"	18
S1	60	#4	4	11'-4"	454
S2	60	#4	5	4'-1"	164
S3	24	#4	6	6'-6"	104
U1	18	#4	7	6'-4"	76
V1	72	#4	STR	6'-4"	305
V2	34	#4	STR	9'-4"	212
V3	30	#4	STR	8'-9"	175

REINFORCING STEEL	LBS.	4,899
CLASS A CONCRETE		
POUR #1 CAP, LOWER WINGS & CONC. COLLARS	C.Y.	33.5
POUR #2 UPPER PART OF WINGS	C.Y.	5.2
TOTAL CLASS A CONCRETE	C.Y.	38.7
HP 12X53 STEEL PILES NO: 6	LIN. FT.	90
PILE EXCAVATION IN SOIL	L.F.	20
PILE EXCAVATION NOT IN SOIL	L.F.	15

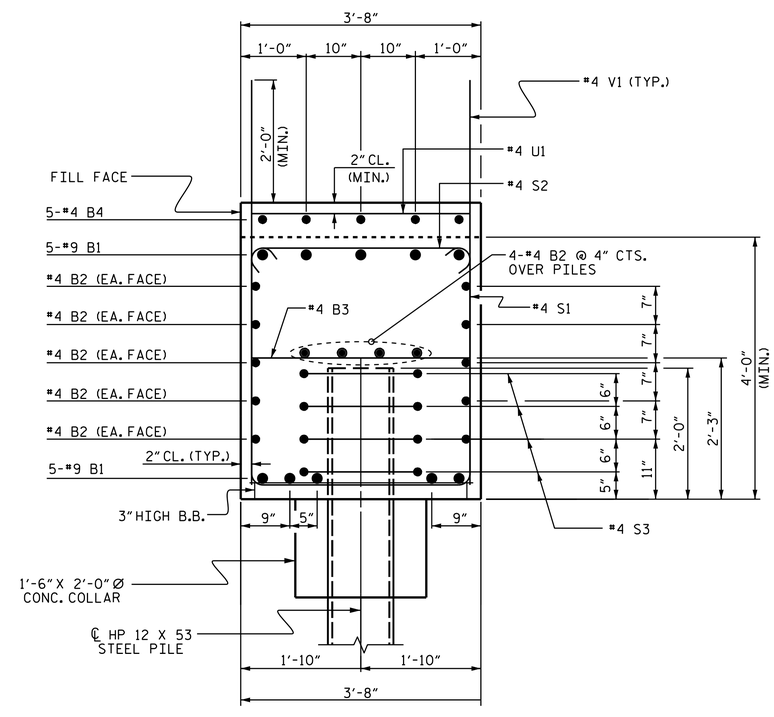

SECTION A-A

PROJECT NO. B-5780

DAVIDSON COUNTY

STATION: 16+03.00 -L-

SHEET 3 OF 3

STATE OF NORTH CAROLINA
DEPARTMENT OF TRANSPORTATION
RALEIGH

SUBSTRUCTURE

INTEGRAL END BENT 2

NORTH CAROLINA PROFESSIONAL SEAL 039349 ENGINEER JEREMY P. McCARTHA

DocuSigned by: Jeremy P. McCartha
F757FFCF9CBA420...
8/23/2016

DOCUMENT NOT CONSIDERED FINAL UNLESS ALL SIGNATURES COMPLETED

REVISIONS							
NO.	BY:	DATE:	NO.	BY:	DATE:	SHEET NO.	S-25
1			3			TOTAL SHEETS	28
2			4				

DRAWN BY :	J.P. MCCARTHA	DATE :	5/26/16
CHECKED BY :	K.D. LAYNE	DATE :	6/14/16
DESIGN ENGINEER OF RECORD:	J.P. MCCARTHA	DATE :	7/28/16

22-AUG-2016 10:08
R:\Structures\Plans\B5780_SMU_E*_01.dgn
jdhawk

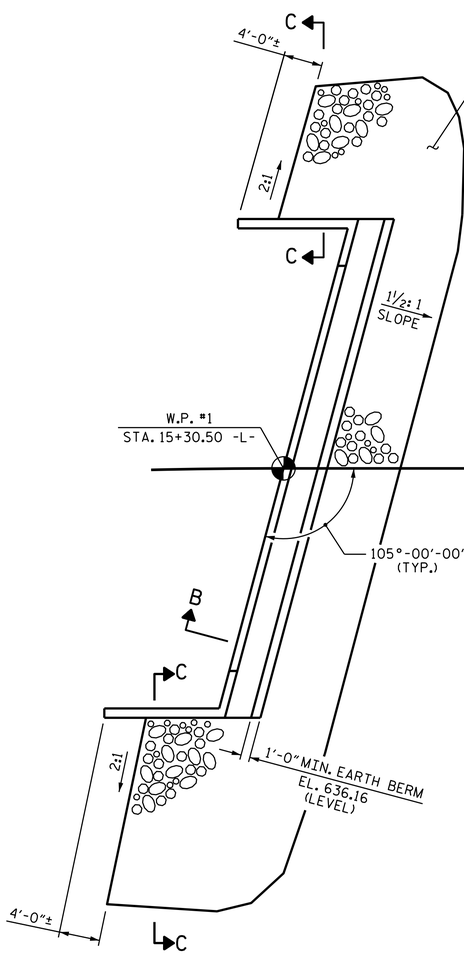

INTEGRAL
END BENT 1

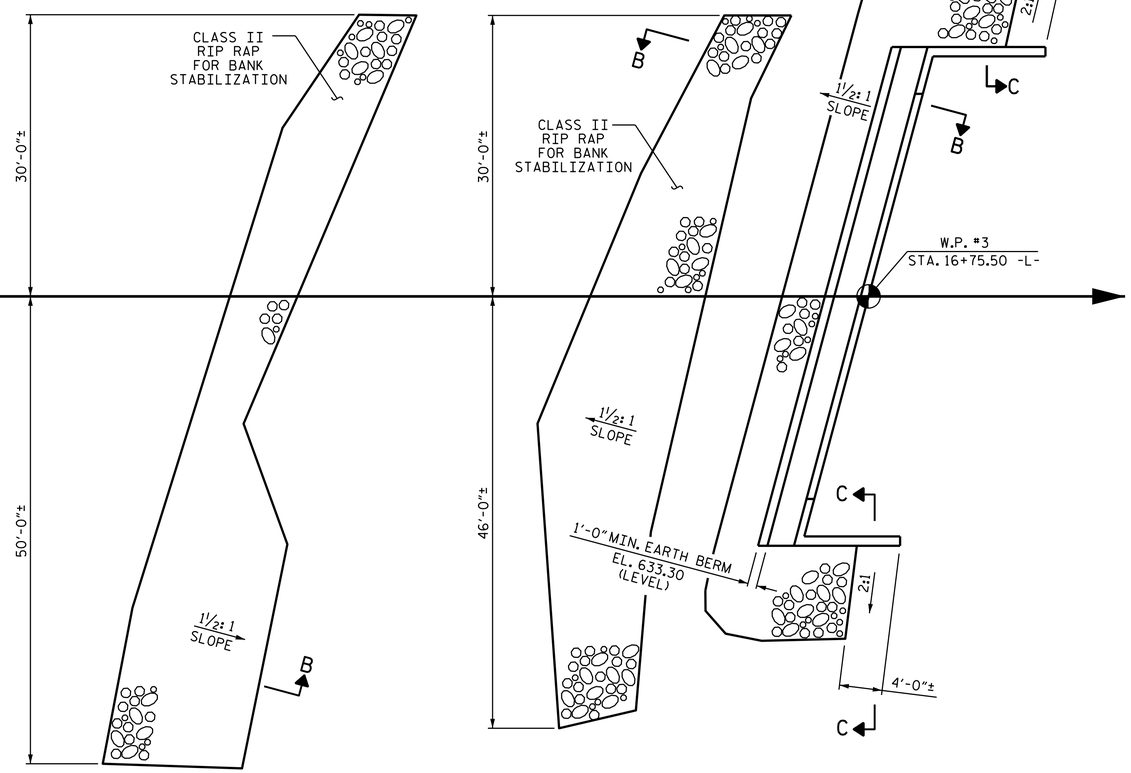

PLAN

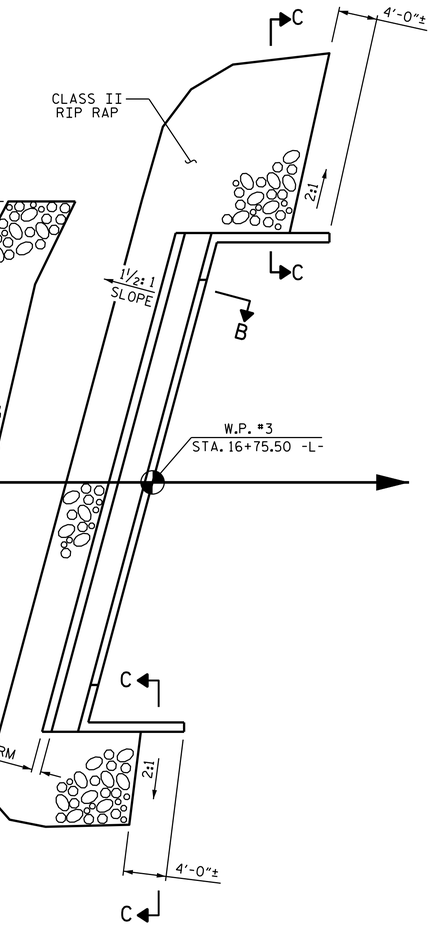

INTEGRAL
END BENT 2

ESTIMATED QUANTITIES

BRIDGE @ STA. 16+03.00 -L-	RIP RAP CLASS II (2'-0" THICK)	GEOTEXTILE FOR DRAINAGE
	TONS	SQ. YDS.
END BENT 1	140	155
BANK STABILIZATION NEAR END BENT 1	100	110
TOTAL END BENT 1	**240**	**265**
BANK STABILIZATION NEAR END BENT 2	100	110
END BENT 2	115	130
TOTAL END BENT 2	**215**	**240**
GRAND TOTAL	**455**	**505**

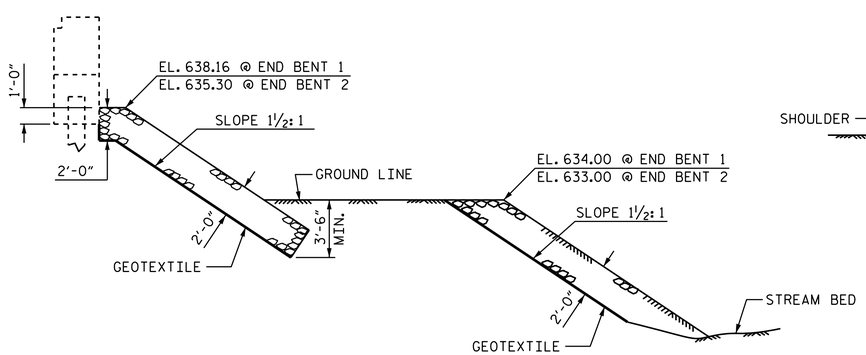

SECTION B-B

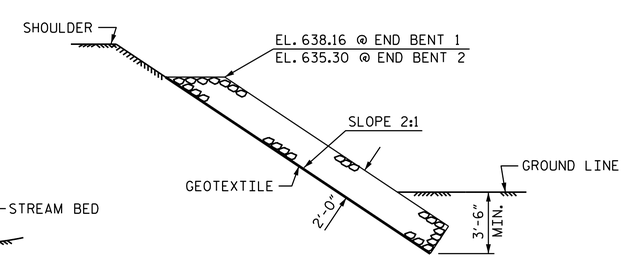

SECTION C-C

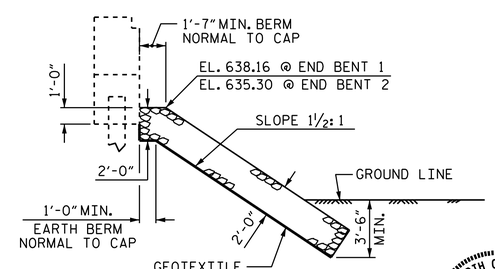

℄ SECTION
BERM RIP RAPPED

PROJECT NO. B-5780
DAVIDSON COUNTY
STATION: 16+03.00 -L-

STATE OF NORTH CAROLINA
DEPARTMENT OF TRANSPORTATION
RALEIGH

RIP RAP DETAILS

NORTH CAROLINA PROFESSIONAL SEAL 039349 ENGINEER JEREMY P. McCARTHA

DocuSigned by: Jeremy P. McCartha
F757FFCF9CBA420...
8/23/2016

DOCUMENT NOT CONSIDERED FINAL UNLESS ALL SIGNATURES COMPLETED

REVISIONS								SHEET NO.
NO.	BY:	DATE:	NO.	BY:	DATE:			S-26
1			3					TOTAL SHEETS
2			4					28

DRAWN BY : M.K. BEARD DATE : 6/1/16
CHECKED BY : J.K. BOWLES DATE : 6/20/16

23-AUG-2016 08:30
R:\Structures\Plans\B5780_SMU_RR_01.dgn
vpatel

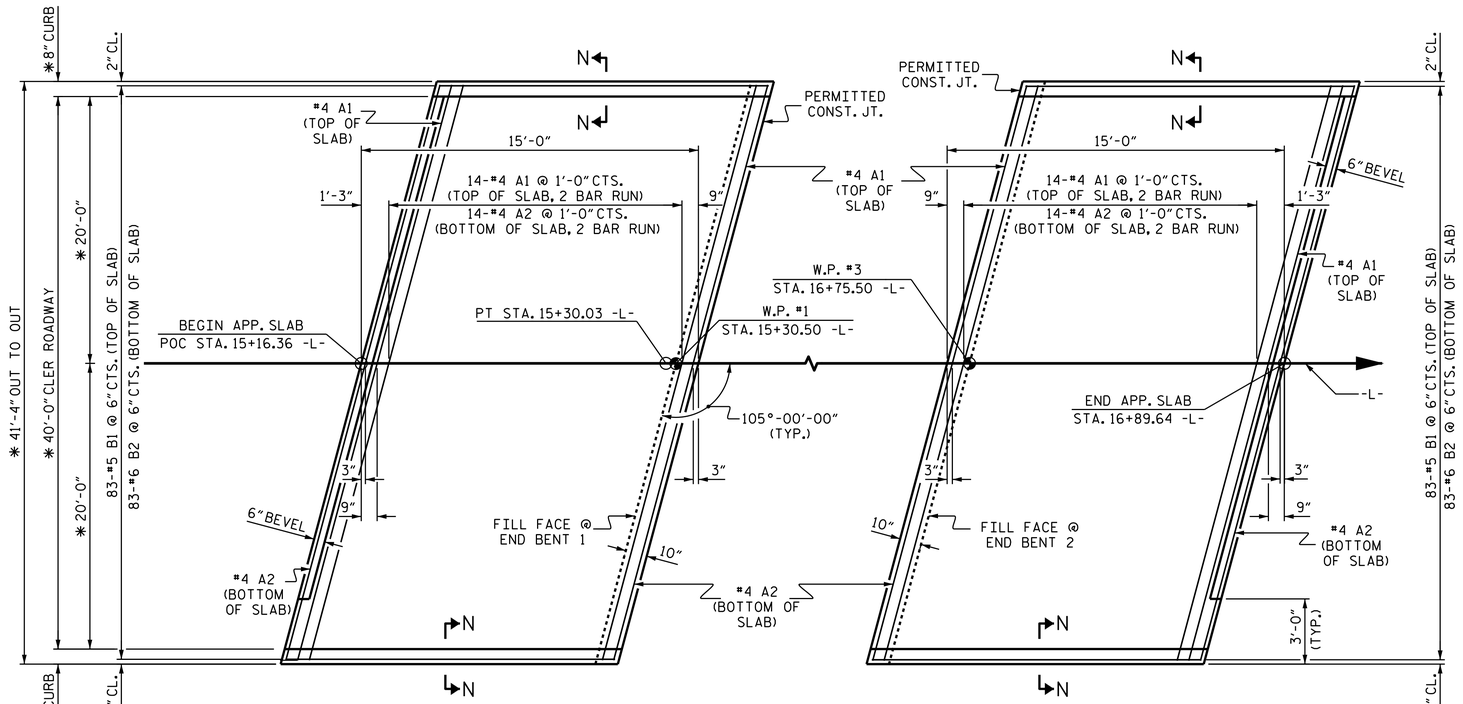

DIMENSIONS SHOWN ARE TYPICAL FOR BOTH APPROACH SLABS

*DIMENSIONS SHOWN ARE RADIAL ONLY AT APPROACH SLAB 1

NOTES

THE APPROACH SLAB MAY BE CAST MONOLITHICALLY WITH THE END BENT DIAPHRAGM AND THE END SECTION OF THE BRIDGE DECK NEAR THE INTEGRAL END BENT.

FOR REINFORCED BRIDGE APPROACH FILL FABRIC WALL INCLUDING GEOTEXTILE, IMPERMEABLE GEOMEMBRANE, 4" Ø DRAINAGE PIPE, #78M STONE, WELDED WIRE FORM, AND SELECT MATERIAL, SEE ROADWAY PLANS.

AREA BETWEEN THE WINGWALL AND APPROACH SLAB SHALL BE GRADED TO DRAIN THE WATER AWAY FROM THE FILL FACE OF THE BRIDGE AND SHALL BE PAVED. SEE ROADWAY PLANS.

THE JOINT OPENING AT THE APPROACH SLAB/DECK INTERFACE SHALL BE SAWED NO MORE THAN 12 HOURS AFTER THE APPROACH SLAB IS CAST. THE JOINT SHALL BE CLEANED OF ALL DEBRIS BEFORE THE SEALANT IS APPLIED. THE JOINT SEALER MATERIAL SHALL CONFORM TO THE REQUIREMENTS OF SECTION 1028-3 OF THE STANDARD SPECIFICATIONS.

ARCH OFFSETS AT APPROACH SLAB 1 ARE NEGLIGIBLE AND NOT SHOWN.

BILL OF MATERIAL

FOR ONE APPROACH SLAB (2 REQ'D)

BAR	NO.	SIZE	TYPE	LENGTH	WEIGHT
* A1	32	#4	STR	22'-4"	477
A2	32	#4	STR	22'-2"	474
* B1	83	#5	STR	14'-4"	1,241
B2	83	#6	STR	14'-8"	1,828
REINFORCING STEEL				LBS.	2,302
* EPOXY COATED REINFORCING STEEL				LBS.	1,718
CLASS AA CONCRETE				C. Y.	26.7

SPLICE CHART

BAR SIZE	EPOXY COATED	UNCOATED
#4	2'-0"	1'-9"

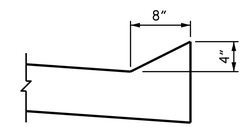

SECTION N-N

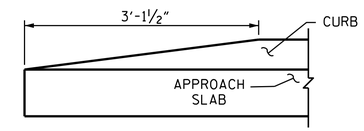

END OF CURB WITHOUT SHOULDER BERM GUTTER

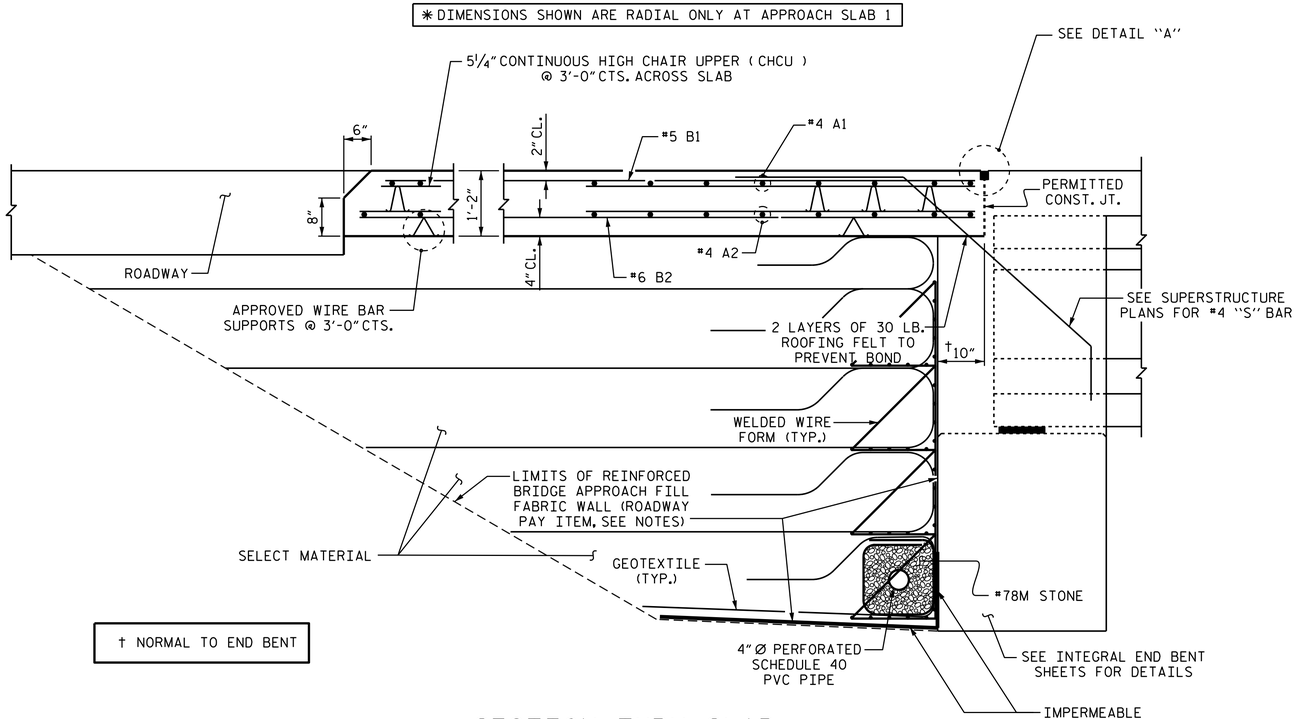

† NORMAL TO END BENT

SECTION THRU SLAB

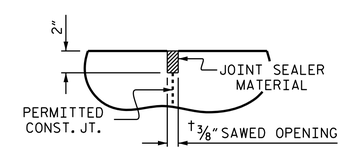

DETAIL "A"

PROJECT NO. B-5780

DAVIDSON COUNTY

STATION: 16+03.00 -L-

SHEET 1 OF 2

STATE OF NORTH CAROLINA
DEPARTMENT OF TRANSPORTATION
RALEIGH

BRIDGE APPROACH SLAB FOR INTEGRAL ABUTMENT

NORTH CAROLINA PROFESSIONAL SEAL 039349 ENGINEER JEREMY P. McCARTHA

DocuSigned by: Jeremy P. McCartha
F757FFCF9CBA420...
8/23/2016

DOCUMENT NOT CONSIDERED FINAL UNLESS ALL SIGNATURES COMPLETED

REVISIONS								
NO.	BY:	DATE:	NO.	BY:	DATE:		SHEET NO.	
1			3				S-27	
2			4				TOTAL SHEETS	
							28	

ASSEMBLED BY : ARIADNE PALMA P. DATE : 06/03/16
CHECKED BY : M. K. BEARD DATE : 06/06/16

DRAWN BY : TLA 10/05
CHECKED BY : GM 5/06

REV. 10/1/11 MAA/GM
REV. 12/21/11 MAA/GM
REV. 6/13 MAA/GM

22-AUG-2016 10:08
R:\Structures\Plans\B5780_SMU_AS _01.dgn
jdhawk

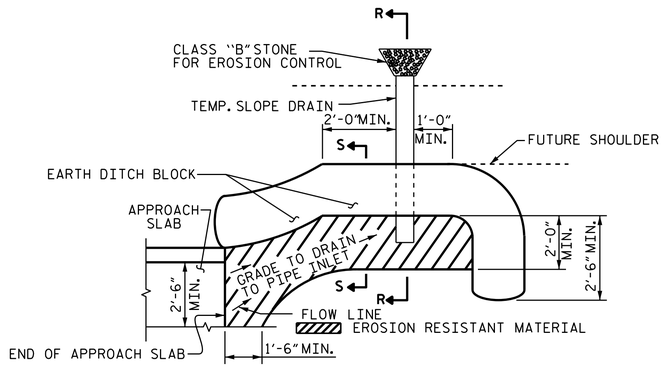

NOTE: IMMEDIATELY AFTER THE CONSTRUCTION OF THE APPROACH SLAB, THE CONTRACTOR SHALL PROVIDE TEMPORARY BERM AND SLOPE DRAIN. CONTRACTOR SHALL GRADE TO PIPE INLET AND PROVIDE EROSION RESISTANT MATERIAL AS SHOWN. THE EROSION RESISTANT MATERIAL SHALL BE EITHER 1) ASPHALT PLANT MIX, TYPE 1 OR TYPE 2, MIN. 2" DEPTH, 2) EROSION CONTROL MAT, OR 3) CONCRETE, AS DIRECTED BY THE ENGINEER. THE SLOPE DRAIN SHALL CONSIST OF A NON-PERFORATED TEMPORARY DRAINAGE PIPE, 12 INCHES IN DIAMETER.

PLAN VIEW

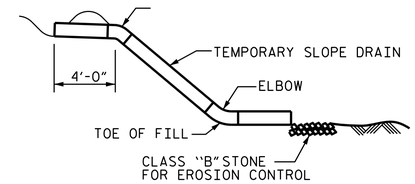

SECTION R-R

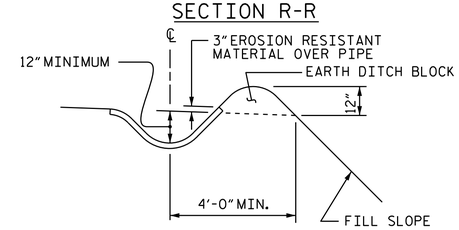

SECTION S-S

TEMPORARY BERM AND SLOPE DRAIN DETAILS

(TO BE USED WHEN SHOULDER BERM GUTTER IS REQUIRED)

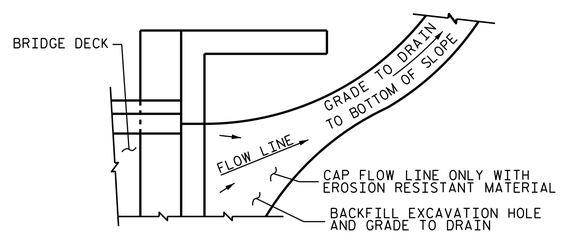

NOTE: IF THE APPROACH SLAB IS NOT CONSTRUCTED IMMEDIATELY AFTER THE BACKFILLING OF THE END BENT EXCAVATION, GRADE TO DRAIN TO THE BOTTOM OF THE SLOPE AND PROVIDE EROSION RESISTANT MATERIAL, SUCH AS FIBERGLASS ROVING OR AS DIRECTED BY THE ENGINEER TO PREVENT SOIL EROSION AND TO PROTECT THE AREA ADJACENT TO THE STRUCTURE. THE CONTRACTOR WILL BE REQUIRED TO REMOVE THESE MATERIALS PRIOR TO CONSTRUCTION OF THE APPROACH SLAB.

TEMPORARY DRAINAGE DETAIL

PROJECT NO. B-5780

DAVIDSON COUNTY

STATION: 16+03.00 -L-

SHEET 2 OF 2

STATE OF NORTH CAROLINA
DEPARTMENT OF TRANSPORTATION
RALEIGH

STANDARD

BRIDGE APPROACH SLAB
FOR INTEGRAL ABUTMENT

NORTH CAROLINA PROFESSIONAL SEAL 039349 ENGINEER JEREMY P. McCARTHA

DocuSigned by: Jeremy P. McCartha
F757FFCF9CBA420...
8/23/2016

DOCUMENT NOT CONSIDERED FINAL UNLESS ALL SIGNATURES COMPLETED

REVISIONS						
NO.	BY:	DATE:	NO.	BY:	DATE:	
1			3			
2			4			

SHEET NO. S-28

TOTAL SHEETS 28

ASSEMBLED BY : ARIADNE PALMA P.		DATE : 06/03/16	
CHECKED BY : M. K. BEARD		DATE : 06/06/16	
DRAWN BY : TLA 10/05	REV. 10/1/11	MAA/GM	
CHECKED BY : GM 5/06	REV. 12/21/11	MAA/GM	
	REV. 6/13	MAA/GM	

22-AUG-2016 10:08
R:\Structures\Plans\B5780_SMU_AS _01.dgn
jdhawk

STANDARD NOTES

DESIGN DATA:

SPECIFICATIONS	A.A.S.H.T.O. (CURRENT)
LIVE LOAD	SEE PLANS
IMPACT ALLOWANCE	SEE A.A.S.H.T.O.
STRESS IN EXTREME FIBER OF	
STRUCTURAL STEEL - AASHTO M270 GRADE 36	20,000 LBS. PER SQ. IN.
- AASHTO M270 GRADE 50W	27,000 LBS. PER SQ. IN.
- AASHTO M270 GRADE 50	27,000 LBS. PER SQ. IN.
REINFORCING STEEL IN TENSION	
GRADE 60	24,000 LBS. PER SQ. IN.
CONCRETE IN COMPRESSION	1,200 LBS. PER SQ. IN.
CONCRETE IN SHEAR	SEE A.A.S.H.T.O.
STRUCTURAL TIMBER - TREATED OR	
UNTREATED - EXTREME FIBER STRESS	1,800 LBS. PER SQ. IN.
COMPRESSION PERPENDICULAR TO GRAIN OF TIMBER	375 LBS. PER SQ. IN.
EQUIVALENT FLUID PRESSURE OF EARTH	30 LBS. PER CU. FT. (MINIMUM)

MATERIAL AND WORKMANSHIP:

EXCEPT AS MAY OTHERWISE BE SPECIFIED ON PLANS OR IN THE SPECIAL PROVISIONS, ALL MATERIAL AND WORKMANSHIP SHALL BE IN ACCORDANCE WITH THE 2012 "STANDARD SPECIFICATIONS FOR ROADS AND STRUCTURES" OF THE N. C. DEPARTMENT OF TRANSPORTATION.

STEEL SHEET PILING FOR PERMANENT OR TEMPORARY APPLICATIONS SHALL BE HOT ROLLED.

CONCRETE:

UNLESS OTHERWISE REQUIRED ON PLANS, CLASS A CONCRETE SHALL BE USED FOR ALL PORTIONS OF ALL STRUCTURES WITH THE EXCEPTION THAT: CLASS AA CONCRETE SHALL BE USED IN BRIDGE SUPERSTRUCTURES, ABUTMENT BACKWALLS, AND APPROACH SLABS; AND CLASS B CONCRETE SHALL BE USED FOR SLOPE PROTECTION AND RIP RAP.

CONCRETE CHAMFERS:

UNLESS OTHERWISE NOTED ON THE PLANS, ALL EXPOSED CORNERS ON STRUCTURES SHALL BE CHAMFERED 3/4" WITH THE FOLLOWING EXCEPTIONS: TOP CORNERS OF CURBS MAY BE ROUNDED TO 1-1/2" RADIUS WHICH IS BUILT INTO CURB FORMS; CORNERS OF TRANSVERSE FLOOR EXPANSION JOINTS SHALL BE ROUNDED WITH A 1/4" FINISHING TOOL UNLESS OTHERWISE REQUIRED ON PLANS; AND CORNERS OF EXPANSION JOINTS IN THE ROADWAY FACES AND TOPS OF CURBS AND SIDEWALKS SHALL BE ROUNDED TO A 1/4" RADIUS WITH A FINISHING STONE OR TOOL UNLESS OTHERWISE REQUIRED ON PLANS.

DOWELS:

DOWELS WHEN INDICATED ON PLANS AS FOR CULVERT EXTENSIONS, SHALL BE EMBEDDED AT LEAST 12" INTO THE OLD CONCRETE AND GROUTED INTO PLACE WITH 1:2 CEMENT MORTAR.

ALLOWANCE FOR DEAD LOAD DEFLECTION, SETTLEMENT, ETC. IN CASTING SUPERSTRUCTURES:

BRIDGES SHALL BE BUILT ON THE GRADE OR VERTICAL CURVE SHOWN ON PLANS. SLABS, CURBS AND PARAPETS SHALL CONFORM TO THE GRADE OR CURVE.

ALL DIMENSIONS WHICH ARE GIVEN IN SECTION AND ARE AFFECTED BY DEAD LOAD DEFLECTIONS ARE DIMENSIONS AT CENTER LINE OF BEARING UNLESS OTHERWISE NOTED ON PLANS. IN SETTING FORMS FOR STEEL BEAM BRIDGES AND PRESTRESSED CONCRETE GIRDER BRIDGES, ADJUSTMENTS SHALL BE MADE DUE TO THE DEAD LOAD DEFLECTIONS FOR THE ELEVATIONS SHOWN. WHERE BLOCKS ARE SHOWN OVER BEAMS FOR BUILDING UP TO THE SLAB, THE VERTICAL DIMENSIONS OF THE BLOCKS SHALL BE ADJUSTED BETWEEN BEARINGS TO COMPENSATE FOR DEAD LOAD DEFLECTIONS, VERTICAL CURVE ORDINATE, AND ACTUAL BEAM CAMBER. WHERE BOTTOM OF SLAB IS IN LINE WITH BOTTOM OF TOP FLANGES, DEPTH OF SLAB BETWEEN BEARINGS SHALL BE ADJUSTED TO COMPENSATE FOR DEAD LOAD DEFLECTION, VERTICAL CURVE ORDINATE, AND ACTUAL BEAM CAMBER.

IN SETTING FALSEWORK AND FORMS FOR REINFORCED CONCRETE SPANS, AN ALLOWANCE SHALL BE MADE FOR DEAD LOAD DEFLECTIONS, SETTLEMENT OF FALSEWORK, AND PERMANENT CAMBER WHICH SHALL BE PROVIDED FOR IN ADDITION TO THE ELEVATIONS SHOWN. AFTER REMOVAL OF THE FALSEWORK, THE FINISHED STRUCTURES SHALL CONFORM TO THE PROFILE AND ELEVATIONS SHOWN ON THE PLANS AND CONSTRUCTION ELEVATIONS FURNISHED BY THE ENGINEER.

DETAILED DRAWINGS FOR FALSEWORK OR FORMS FOR BRIDGE SUPERSTRUCTURE AND ANY STRUCTURE OR PARTS OF A STRUCTURE AS NOTED ON THE PLANS SHALL BE SUBMITTED TO THE ENGINEER FOR APPROVAL BEFORE CONSTRUCTION OF THE FALSEWORK OR FORMS IS STARTED.

REINFORCING STEEL:

ALL REINFORCING STEEL SHALL BE DEFORMED. DIMENSIONS RELATIVE TO PLACEMENT OF REINFORCING ARE TO CENTERS OF BARS UNLESS OTHERWISE INDICATED IN THE PLANS. DIMENSIONS ON BAR DETAILS ARE TO CENTERS OF BARS OR ARE OUT TO OUT AS INDICATED ON PLANS.

WIRE BAR SUPPORTS SHALL BE PROVIDED FOR REINFORCING STEEL WHERE INDICATED ON THE PLANS. WHEN BAR SUPPORT PIECES ARE PLACED IN CONTINUOUS LINES, THEY SHALL BE SO PLACED THAT THE ENDS OF THE SUPPORTING WIRES SHALL BE LAPPED TO LOCK LEGS ON ADJOINING PIECES.

STRUCTURAL STEEL:

AT THE CONTRACTOR'S OPTION, HE MAY SUBSTITUTE 7/8" Ø SHEAR STUDS FOR THE 3/4" Ø STUDS SPECIFIED ON THE PLANS. THIS SUBSTITUTION SHALL BE MADE AT THE RATE OF 3 - 7/8" Ø STUDS FOR 4 - 3/4" Ø STUDS, AND STUD SPACING CHANGES SHALL BE MADE AS NECESSARY TO PROVIDE THE SAME EQUIVALENT NUMBER OF 7/8" Ø STUDS ALONG THE BEAM AS SHOWN FOR 3/4" Ø STUDS BASED ON THE RATIO OF 3 - 7/8" Ø STUDS FOR 4 - 3/4" Ø STUDS. STUDS OF THE LENGTH SPECIFIED ON THE PLANS MUST BE PROVIDED. THE MAXIMUM SPACING SHALL BE 2'-0".

EXCEPT AT THE INTERIOR SUPPORTS OF CONTINUOUS BEAMS WHERE THE COVER PLATE IS IN CONTACT WITH BEARING PLATE, THE CONTRACTOR MAY, AT HIS OPTION, SUBSTITUTE FOR THE COVER PLATES DESIGNATED ON THE PLANS COVER PLATES OF THE EQUIVALENT AREA PROVIDED THESE PLATES ARE AT LEAST 5/16" IN THICKNESS AND DO NOT EXCEED A WIDTH EQUAL TO THE FLANGE WIDTH LESS 2" OR A THICKNESS EQUAL TO 2 TIMES THE FLANGE THICKNESS. THE SIZE OF FILLET WELDS SHALL CONFORM TO THE REQUIREMENTS OF THE CURRENT ANSI/AASHTO/AWS "BRIDGE WELDING CODE". ELECTROSLAG WELDING WILL NOT BE PERMITTED.

WITH THE SOLE EXCEPTION OF EDGES AT SURFACES WHICH BEAR ON OTHER SURFACES, ALL SHARP EDGES AND ENDS OF SHAPES AND PLATES SHALL BE SLIGHTLY ROUNDED BY SUITABLE MEANS TO A RADIUS OF APPROXIMATELY 1/16 INCH OR EQUIVALENT FLAT SURFACE AT A SUITABLE ANGLE PRIOR TO PAINTING, GALVANIZING, OR METALLIZING.

HANDRAILS AND POSTS:

METAL STANDARDS AND FACES OF THE CONCRETE END POSTS FOR THE METAL RAIL SHALL BE SET NORMAL TO THE GRADE OF THE CURB, UNLESS OTHERWISE SHOWN ON PLANS. THE METAL RAIL AND TOPS OF CONCRETE POSTS USED WITH THE ALUMINUM RAIL SHALL BE BUILT PARALLEL TO THE GRADE OF THE CURB.

METAL HANDRAILS SHALL BE IN ACCORDANCE WITH THE PLANS. RAILS SHALL BE AS MANUFACTURED FOR BRIDGE RAILING. CASTINGS SHALL BE OF A UNIFORM APPEARANCE. FINS AND OTHER DEFORMATIONS RESULTING FROM CASTING OR OTHERWISE SHALL BE REMOVED IN A MANNER SO THAT A UNIFORM COLORING OF THE COMPLETED CASTING SHALL BE OBTAINED. CASTINGS WITH DISCOLORATIONS OR OF NON-UNIFORM COLORING WILL NOT BE ACCEPTED. CERTIFIED MILL REPORTS ARE REQUIRED FOR METAL RAILS AND POSTS.

SPECIAL NOTES:

GENERALLY, IN CASE OF DISCREPANCY, THIS STANDARD SHEET OF NOTES SHALL GOVERN OVER THE SPECIFICATIONS, BUT THE REMAINDER OF THE PLANS SHALL GOVERN OVER NOTES HEREON, AND SPECIAL PROVISIONS SHALL GOVERN OVER ALL. SEE SPECIFICATIONS ARTICLE 105-4.

ENGLISH

JANUARY, 1990

STD. NO. SN