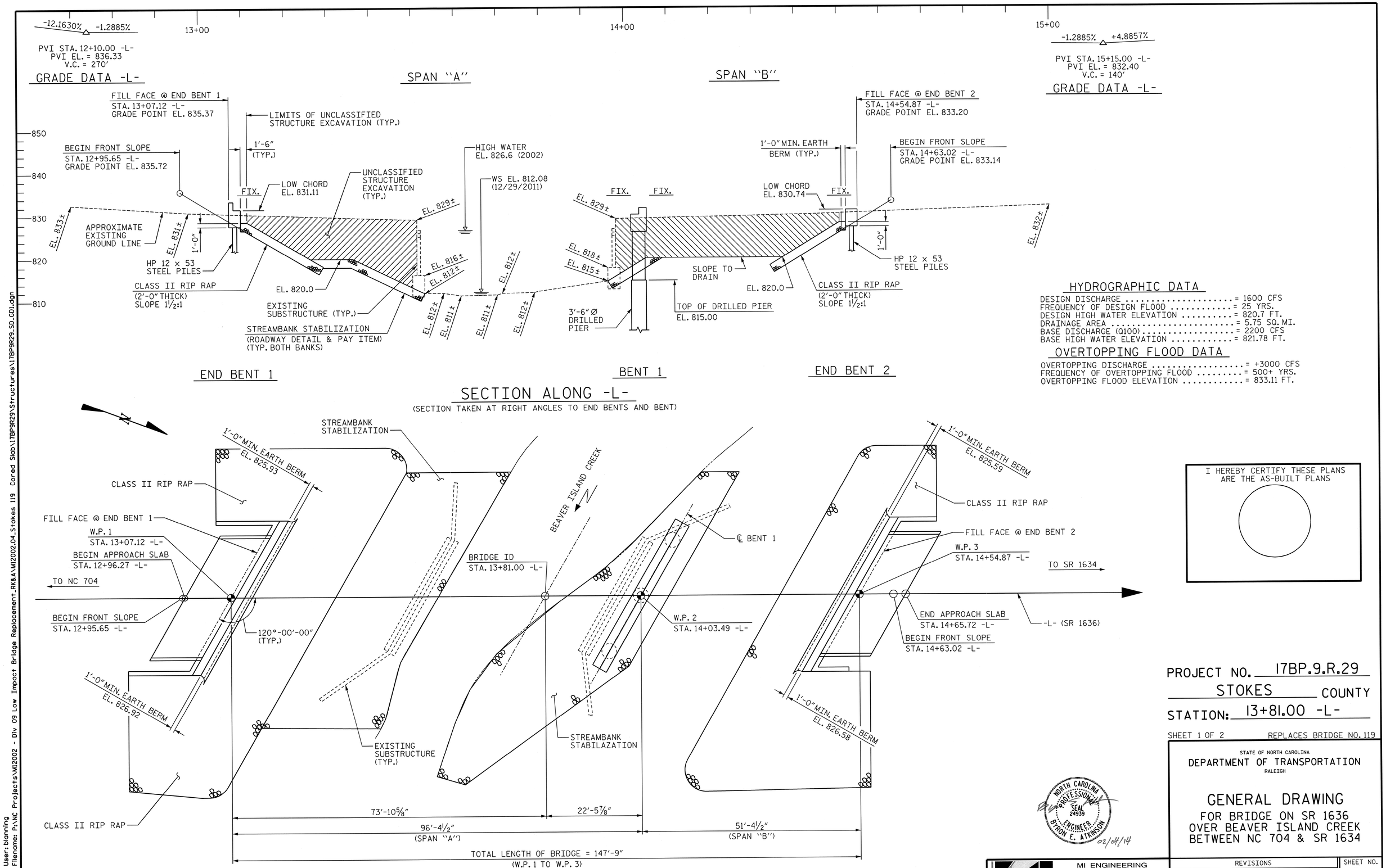

HYDROGRAPHIC DATA

DESIGN DISCHARGE ..... = 1600 CFS
FREQUENCY OF DESIGN FLOOD ..... = 25 YRS.
DESIGN HIGH WATER ELEVATION ..... = 820.7 FT.
DRAINAGE AREA ..... = 5.75 SQ. MI.
BASE DISCHARGE (Q100) ..... = 2200 CFS
BASE HIGH WATER ELEVATION ..... = 821.78 FT.

OVERTOPPING FLOOD DATA

OVERTOPPING DISCHARGE ..... = +3000 CFS
FREQUENCY OF OVERTOPPING FLOOD ..... = 500+ YRS.
OVERTOPPING FLOOD ELEVATION ..... = 833.11 FT.

PROJECT NO. 17BP.9.R.29
STOKES COUNTY
STATION: 13+81.00 -L-

SHEET 1 OF 2 REPLACES BRIDGE NO. 119

STATE OF NORTH CAROLINA
DEPARTMENT OF TRANSPORTATION
RALEIGH

GENERAL DRAWING

FOR BRIDGE ON SR 1636
OVER BEAVER ISLAND CREEK
BETWEEN NC 704 & SR 1634

B.M. #1: RR SPIKE IN SW ROOT OF 18" BEECH TREE, 80.79' RT. OF STA. 15+86.74 -L-, EL. 829.09

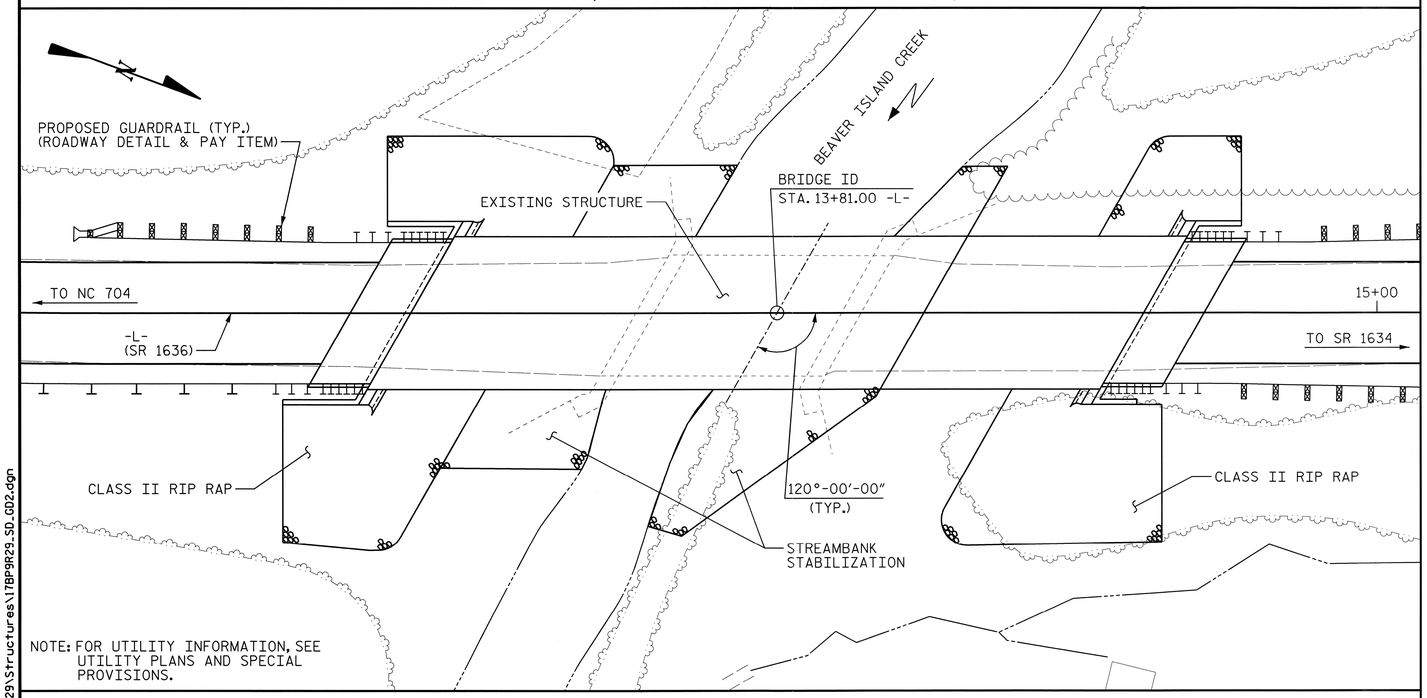

NOTE: FOR UTILITY INFORMATION, SEE UTILITY PLANS AND SPECIAL PROVISIONS.

LOCATION SKETCH

TOTAL BILL OF MATERIAL

	REMOVAL OF EXISTING STRUCTURE	3'-6" Ø DRILLED PIER IN SOIL	3'-6" Ø DRILLED PIER NOT IN SOIL	PERMANENT STEEL CASING FOR 3'-6" Ø DRILLED PIER	PDA TESTING	CSL TESTING	UNCLASSIFIED STRUCTURE EXCAVATION	CLASS A CONCRETE	BRIDGE APPROACH SLABS	REINFORCING STEEL
	LUMP SUM	LIN. FT.	LIN. FT.	LIN. FT.	EACH	EACH	LUMP SUM	CU. YDS.	LUMP SUM	LBS.
SUPERSTRUCTURE										
END BENT 1							LUMP SUM	30.7		4734
BENT 1		29.7	36.3	27.0		1		34.2		11463
END BENT 2							LUMP SUM	22.4		2736
TOTAL	LUMP SUM	29.7	36.3	27.0	1	1	LUMP SUM	87.3	LUMP SUM	18933

TOTAL BILL OF MATERIAL

	SPIRAL COLUMN REINFORCING STEEL	HP 12 X 53 STEEL PILES		STEEL PILE POINTS	VERTICAL CONCRETE BARRIER RAIL	CLASS II RIP RAP (2'-0" THICK)	GEOTEXTILE FOR DRAINAGE	ELASTOMERIC BEARINGS	3'-0" x 3'-3" PRESTRESSED CONCRETE BOX BEAMS		3'-0" x 1'-9" PRESTRESSED CONCRETE CORED SLABS	
	LBS.	NO.	LIN. FT.	EACH	LIN. FT.	TONS	SQ. YDS.	LUMP SUM	NO.	LIN. FT.	NO.	LIN. FT.
SUPERSTRUCTURE					290.29			LUMP SUM	10	950.00	10	500.00
END BENT 1		5	135	5		273	303					
BENT 1	2156											
END BENT 2		5	100	5		231	257					
TOTAL	2156	10	235	10	290.29	504	560	LUMP SUM	10	950.00	10	500.00

NOTES

ASSUMED LIVE LOAD = HL-93 OR ALTERNATE LOADING.

FOR OTHER DESIGN DATA AND GENERAL NOTES, SEE SHEET SN.

FOR EROSION CONTROL MEASURES SEE EROSION CONTROL PLANS.

THIS BRIDGE HAS BEEN DESIGNED IN ACCORDANCE WITH THE REQUIREMENTS OF THE AASHTO LRFD BRIDGE DESIGN SPECIFICATIONS.

THIS BRIDGE IS LOCATED IN SEISMIC ZONE 1.

THE EXISTING STRUCTURE CONSISTING OF ONE (1) SPAN @ 45'-6", WITH STEEL PLANK DECK ON I-BEAMS AND A CLEAR ROADWAY WIDTH OF 23'-9" ON TIMBER CAPS WITH TIMBER POSTS, SILLS AND CONCRETE ENCASED TIMBER BULKHEADS AND LOCATED AT THE SITE OF THE PROPOSED STRUCTURE SHALL BE REMOVED.

REMOVAL OF THE EXISTING BRIDGE SHALL BE PERFORMED SO AS TO NOT ALLOW DEBRIS TO FALL INTO THE WATER. THE CONTRACTOR SHALL SUBMIT DEMOLITION PLANS FOR REVIEW AND REMOVE THE BRIDGE IN ACCORDANCE WITH ARTICLE 402-2 OF THE STANDARD SPECIFICATIONS.

THE MATERIAL SHOWN IN THE CROSS-HATCHED AREA SHALL BE EXCAVATED FOR A DISTANCE OF 30 FT. EACH SIDE OF THE CENTERLINE ROADWAY AS DIRECTED BY THE ENGINEER. THIS WORK WILL BE PAID FOR AT THE CONTRACT LUMP SUM PRICE FOR UNCLASSIFIED STRUCTURE EXCAVATION. SEE SECTION 412 OF THE STANDARD SPECIFICATIONS.

THE SUBSTRUCTURE OF THE EXISTING BRIDGE INDICATED ON THE PLANS IS FROM THE BEST INFORMATION AVAILABLE. THIS INFORMATION IS SHOWN FOR THE CONVENIENCE OF THE CONTRACTOR. THE CONTRACTOR SHALL HAVE NO CLAIM WHATSOEVER AGAINST THE DEPARTMENT OF TRANSPORTATION FOR ANY DELAYS OR ADDITIONAL COST INCURRED BASED ON THE DIFFERENCES BETWEEN THE EXISTING BRIDGE SUBSTRUCTURE SHOWN ON THE PLANS AND THE ACTUAL CONDITIONS AT THE PROJECT SITE.

ASPHALT WEARING SURFACE IS INCLUDED IN THE ROADWAY QUANTITY. SEE ROADWAY QUANTITIES.

THIS STRUCTURE HAS BEEN DESIGNED IN ACCORDANCE WITH "HEC 18 - EVALUATING SCOUR AT BRIDGES".

FOR FORMWORK AND FALSEWORK, SEE SPECIAL PROVISIONS.

FOR SUBMITTAL OF WORKING DRAWINGS, SEE SPECIAL PROVISIONS.

FOR CRANE SAFETY, SEE SPECIAL PROVISIONS.

FOR GROUT FOR STRUCTURES, SEE SPECIAL PROVISIONS.

INASMUCH AS THE PAINT SYSTEM ON THE EXISTING STRUCTURAL STEEL CONTAINS LEAD, THE CONTRACTOR'S ATTENTION IS DIRECTED TO ARTICLE 107-1 OF THE STANDARD SPECIFICATIONS. ANY COSTS RESULTING FROM COMPLIANCE WITH APPLICABLE STATE OR FEDERAL REGULATIONS PERTAINING TO HANDLING OF MATERIALS CONTAINING LEAD BASED PAINT SHALL BE INCLUDED IN THE BID PRICE FOR "REMOVAL OF EXISTING STRUCTURE AT STATION 13+81.00 -L-."

FOR DRILLED PIERS, SEE SECTION 411 OF THE STANDARD SPECIFICATIONS.

DRILLED PIERS AT BENT 1 ARE DESIGNED FOR A FACTORED RESISTANCE OF 400 TONS PER PIER. CHECK FIELD CONDITIONS FOR THE REQUIRED TIP RESISTANCE OF 85 TSF.

DO NOT USE SLURRY CONSTRUCTION FOR DRILLED PIERS AT BENT 1.

CSL TUBES ARE REQUIRED AND CSL TESTING MAY BE REQUIRED FOR DRILLED PIERS. THE ENGINEER WILL DETERMINE THE NEED FOR CSL TESTING. FOR CSL TESTING, SEE SECTION 411 OF THE STANDARD SPECIFICATIONS.

PERMANENT STEEL CASINGS MAY BE REQUIRED FOR DRILLED PIERS AT BENT 1. IF REQUIRED, DO NOT EXTEND PERMANENT STEEL CASINGS BELOW ELEVATION 806 FT. WITHOUT PRIOR APPROVAL FROM THE ENGINEER. THE ENGINEER WILL DETERMINE THE NEED FOR PERMANENT STEEL CASINGS.

INSTALL DRILLED PIERS AT BENT 1 TO A TIP ELEVATION OF NO HIGHER THAN ELEVATION 793 FT AND WITH THE REQUIRED TIP RESISTANCE.

THE SCOUR CRITICAL ELEVATION FOR BENT 1 IS ELEVATION 802.5 FT. SCOUR CRITICAL ELEVATIONS ARE USED TO MONITOR POSSIBLE SCOUR PROBLEMS DURING THE LIFE OF THE STRUCTURE.

FOR PILES, SEE SECTION 450 OF THE STANDARD SPECIFICATIONS.

PILES AT END BENT 1 ARE DESIGNED FOR A FACTORED RESISTANCE OF 135 TONS PER PILE. DRIVE PILES TO A REQUIRED DRIVING RESISTANCE OF 225 TONS.

PILES AT END BENT 2 ARE DESIGNED FOR A FACTORED RESISTANCE OF 81 TONS PER PILE. DRIVE PILES TO A REQUIRED DRIVING RESISTANCE OF 135 TONS.

STEEL H-PILE POINTS ARE REQUIRED FOR STEEL H-PILES AT END BENT 1 AND END BENT 2. FOR STEEL PILE POINTS, SEE SECTION 450 OF THE STANDARD SPECIFICATIONS.

TESTING PILES WITH THE PILE DRIVING ANALYZER (PDA) DURING DRIVING, RESTRIKING OR REDRIVING MAY BE REQUIRED. THE ENGINEER WILL DETERMINE THE NEED FOR PDA TESTING. FOR PDA TESTING, SEE SECTION 450 OF THE STANDARD SPECIFICATIONS.

PROJECT NO. 17BP.9.R.29

STOKES COUNTY

STATION: 13+81.00 -L-

SHEET 2 OF 2

NORTH CAROLINA PROFESSIONAL SEAL 24939 ENGINEER BYRON E. ATKINSON

02/04/14

STATE OF NORTH CAROLINA
DEPARTMENT OF TRANSPORTATION
RALEIGH

GENERAL DRAWING

FOR BRIDGE ON SR 1636
OVER BEAVER ISLAND CREEK
BETWEEN NC 704 & SR 1634

MI ENGINEERING
1011 SCHAUB DRIVE, SUITE 100
RALEIGH, NC 27606
(919) 851-6606
FIRM PE NUMBER : P-0671

REVISIONS						SHEET NO.
NO.	BY:	DATE:	NO.	BY:	DATE:	S-2
1			3			TOTAL SHEETS
2			4			24

DRAWN BY : J.S. ISRAELNAIM DATE : 01/13
CHECKED BY : B.E. ATKINSON DATE : 10/13

2/4/2014
5:15:27 PM
User: blanning
Filename: P:\NC Projects\MI2002 - Div 09 Low Impact Bridge Replacement_RK&A\MI2002.04_Stokes 119 Cored Slab\17BP9R29\Structures\17BP9R29_SD_GD2.dgn

LOAD AND RESISTANCE FACTOR RATING (LRFD) SUMMARY FOR PRESTRESSED CONCRETE GIRDERS

LEVEL		VEHICLE	WEIGHT (W) (TONS)	CONTROLLING LOAD RATING	MINIMUM RATING FACTORS (RF)	TONS = W X RF	STRENGTH I LIMIT STATE											SERVICE III LIMIT STATE						COMMENT NUMBER
								MOMENT					SHEAR						MOMENT					
							LIVELOAD FACTORS	DISTRIBUTION FACTORS (DF)	RATING FACTOR	SPAN	GIRDER LOCATION	DISTANCE FROM LEFT END OF SPAN (ft)	DISTRIBUTION FACTORS (DF)	RATING FACTOR	SPAN	GIRDER LOCATION	DISTANCE FROM LEFT END OF SPAN (ft)	LIVELOAD FACTORS	DISTRIBUTION FACTORS (DF)	RATING FACTOR	SPAN	GIRDER LOCATION	DISTANCE FROM LEFT END OF SPAN (ft)	
DESIGN LOAD RATING		HL-93(Inv)	N/A	1	1.228	--	1.75	0.247	1.65	A	EL	46.634	0.612	**1.23**	A	EL	**9.327**	0.80	0.247	1.45	A	EL	46.634	
		HL-93(Opr)	N/A	--	1.592	--	1.35	0.247	2.14	A	EL	46.634	0.612	1.59	A	EL	9.327	N/A	--	--	--	--	--	
		HS-20(Inv)	36.000	2	1.621	58.369	1.75	0.247	2.27	A	EL	46.634	0.612	**1.62**	A	EL	**9.327**	0.80	0.247	2.00	A	EL	46.634	
		HS-20(Opr)	36.000	--	2.102	75.663	1.35	0.247	2.94	A	EL	46.634	0.612	2.1	A	EL	9.327	N/A	--	--	--	--	--	
LEGAL LOAD RATING	SV	SNSH	13.500	--	4.699	63.437	1.4	0.247	6.68	A	EL	46.634	0.612	4.96	A	EL	9.327	0.80	0.247	4.70	A	EL	46.634	
		SNGARBS2	20.000	--	3.419	68.378	1.4	0.247	4.86	A	EL	46.634	0.612	3.48	A	EL	9.327	0.80	0.247	3.42	A	EL	46.634	
		SNAGRIS2	22.000	--	3.204	70.491	1.4	0.247	4.55	A	EL	46.634	0.612	3.22	A	EL	9.327	0.80	0.247	3.20	A	EL	46.634	
		SNCOTTS3	27.250	--	2.336	63.655	1.4	0.247	3.32	A	EL	46.634	0.612	2.47	A	EL	9.327	0.80	0.247	2.34	A	EL	46.634	
		SNAGGRS4	34.925	--	1.92	67.062	1.4	0.247	2.73	A	EL	46.634	0.612	2.02	A	EL	9.327	0.80	0.247	1.92	A	EL	46.634	
		SNS5A	35.550	--	1.88	66.83	1.4	0.247	2.67	A	EL	46.634	0.612	2.03	A	EL	9.327	0.80	0.247	1.88	A	EL	46.634	
		SNS6A	39.950	--	1.712	68.384	1.4	0.247	2.43	A	EL	46.634	0.612	1.84	A	EL	9.327	0.80	0.247	1.71	A	EL	46.634	
		SNS7B	42.000	--	1.63	68.444	1.4	0.247	2.32	A	EL	46.634	0.612	1.79	A	EL	9.327	0.80	0.247	1.63	A	EL	46.634	
	TTST	TNAGRIT3	33.000	--	2.084	68.757	1.4	0.247	2.96	A	EL	46.634	0.612	2.2	A	EL	9.327	0.80	0.247	2.08	A	EL	46.634	
		TNT4A	33.075	--	2.089	69.1	1.4	0.247	2.97	A	EL	46.634	0.612	2.16	A	EL	9.327	0.80	0.247	2.09	A	EL	46.634	
		TNT6A	41.600	--	1.696	70.551	1.4	0.247	2.41	A	EL	46.634	0.612	1.88	A	EL	9.327	0.80	0.247	1.70	A	EL	46.634	
		TNT7A	42.000	--	1.698	71.314	1.4	0.247	2.41	A	EL	46.634	0.612	1.85	A	EL	9.327	0.80	0.247	1.70	A	EL	46.634	
		TNT7B	42.000	--	1.741	73.113	1.4	0.247	2.47	A	EL	46.634	0.612	1.76	A	EL	9.327	0.80	0.247	1.74	A	EL	46.634	
		TNAGRIT4	43.000	--	1.668	71.712	1.4	0.247	2.37	A	EL	46.634	0.612	1.71	A	EL	9.327	0.80	0.247	1.67	A	EL	46.634	
		TNAGT5A	45.000	--	1.578	71.009	1.4	0.247	2.24	A	EL	46.634	0.612	1.68	A	EL	9.327	0.80	0.247	1.58	A	EL	46.634	
		TNAGT5B	45.000	3	1.564	70.373	1.4	0.247	2.22	A	EL	46.634	0.612	1.63	A	EL	9.327	0.80	0.247	**1.56**	A	EL	**46.634**	

LOAD FACTORS:

DESIGN LOAD RATING FACTORS	LIMIT STATE	γ_{DC}	γ_{DW}
	STRENGTH I	1.25	1.50
	SERVICE III	1.00	1.00

NOTES:

MINIMUM RATING FACTORS ARE BASED ON THE STRENGTH I AND SERVICE III LIMIT STATES.

ALLOWABLE STRESSES FOR SERVICE III LIMIT STATE ARE AS REQUIRED FOR DESIGN.

COMMENTS:

1.
2.
3.
4.

CONTROLLING LOAD RATING
1 DESIGN LOAD RATING (HL-93)
2 DESIGN LOAD RATING (HS-20)
3 LEGAL LOAD RATING **
** SEE CHART FOR VEHICLE TYPE

GIRDER LOCATION
I - INTERIOR GIRDER
EL - EXTERIOR LEFT GIRDER
ER - EXTERIOR RIGHT GIRDER

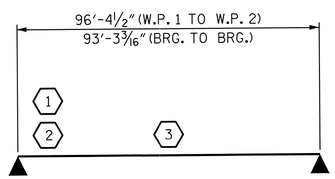

LRFR SUMMARY

FOR SPAN "A"

PROJECT NO. 17BP.9.R.29

STOKES COUNTY

STATION: 13+81.00 -L-

STATE OF NORTH CAROLINA
DEPARTMENT OF TRANSPORTATION
RALEIGH

STANDARD

LRFR SUMMARY FOR 95' BOX BEAM UNIT 60° SKEW & 120° SKEW (NON-INTERSTATE TRAFFIC)

NORTH CAROLINA PROFESSIONAL SEAL 24939 ENGINEER BYRON E. ATKINSON

02/04/14

MI ENGINEERING
1011 SCHAUB DRIVE, SUITE 100
RALEIGH, NC 27606
(919) 851-6606
FIRM PE NUMBER : P-0671

REVISIONS						SHEET NO.
NO.	BY:	DATE:	NO.	BY:	DATE:	S-3
1			3			TOTAL SHEETS
2			4			24

STD. NO. 39LRFR1_60&120S_95L

ASSEMBLED BY : J.S. ISRAELNAIM DATE : 01/13
CHECKED BY : B.E. ATKINSON DATE : 01/13

DRAWN BY : TMG 11/11
CHECKED BY : AAC 11/11

2/4/2014
5:15:57 PM
User: blanning
Filename: P:\NC Projects\MI2002 - Div 09 Low Impact Bridge Replacement_RK&A\MI2002.04_Stokes 119 Cored Slab\17BP9R29\Structures\17BP9R29_SD_LRFR1.dgn

LOAD AND RESISTANCE FACTOR RATING (LRFD) SUMMARY FOR PRESTRESSED CONCRETE GIRDERS

LEVEL		VEHICLE	WEIGHT (W) (TONS)	CONTROLLING LOAD RATING	MINIMUM RATING FACTORS (RF)	TONS = W X RF	STRENGTH I LIMIT STATE											SERVICE III LIMIT STATE						COMMENT NUMBER
								MOMENT					SHEAR						MOMENT					
							LIVELOAD FACTORS	DISTRIBUTION FACTORS (DF)	RATING FACTOR	SPAN	GIRDER LOCATION	DISTANCE FROM LEFT END OF SPAN (ft)	DISTRIBUTION FACTORS (DF)	RATING FACTOR	SPAN	GIRDER LOCATION	DISTANCE FROM LEFT END OF SPAN (ft)	LIVELOAD FACTORS	DISTRIBUTION FACTORS (DF)	RATING FACTOR	SPAN	GIRDER LOCATION	DISTANCE FROM LEFT END OF SPAN (ft)	
DESIGN LOAD RATING		HL-93(Inv)	N/A	1	1.35	--	1.75	0.25	1.74	50'	EL	24.423	0.656	**1.35**	50'	EL	**9.769**	0.80	0.25	1.59	50'	EL	24.423	
		HL-93(Opr)	N/A	--	1.75	--	1.35	0.25	2.25	50'	EL	24.423	0.656	1.75	50'	EL	9.769	N/A	--	--	--	--	--	
		HS-20(Inv)	36.000	2	1.586	57.108	1.75	0.25	2.15	50'	EL	24.423	0.656	**1.59**	50'	EL	**9.769**	0.80	0.25	1.97	50'	EL	24.423	
		HS-20(Opr)	36.000	--	2.056	74.028	1.35	0.25	2.79	50'	EL	24.423	0.656	2.06	50'	EL	9.769	N/A	--	--	--	--	--	
LEGAL LOAD RATING	SV	SNSH	13.500	--	4.009	54.117	1.4	0.25	5.47	50'	EL	24.423	0.656	4.31	50'	EL	9.769	0.80	0.25	4.01	50'	EL	24.423	
		SNGARBS2	20.000	--	3.168	63.352	1.4	0.25	4.32	50'	EL	24.423	0.656	3.19	50'	EL	9.769	0.80	0.25	3.17	50'	EL	24.423	
		SNAGRIS2	22.000	--	3.009	66.192	1.4	0.25	4.18	50'	EL	19.538	0.656	3.01	50'	EL	9.769	0.80	0.25	3.07	50'	EL	24.423	
		SNCOTTS3	27.250	--	2	54.493	1.4	0.25	2.73	50'	EL	24.423	0.656	2.16	50'	EL	9.769	0.80	0.25	2.00	50'	EL	24.423	
		SNAGGRS4	34.925	--	1.739	60.742	1.4	0.25	2.37	50'	EL	24.423	0.656	1.88	50'	EL	9.769	0.80	0.25	1.74	50'	EL	24.423	
		SNS5A	35.550	--	1.696	60.292	1.4	0.25	2.31	50'	EL	24.423	0.656	1.96	50'	EL	9.769	0.80	0.25	1.70	50'	EL	24.423	
		SNS6A	39.950	--	1.586	63.364	1.4	0.25	2.16	50'	EL	24.423	0.656	1.82	50'	EL	9.769	0.80	0.25	1.59	50'	EL	24.423	
		SNS7B	42.000	--	1.512	63.487	1.4	0.25	2.06	50'	EL	24.423	0.656	1.85	50'	EL	9.769	0.80	0.25	1.51	50'	EL	24.423	
	TTST	TNAGRIT3	33.000	--	1.943	64.127	1.4	0.25	2.65	50'	EL	24.423	0.656	2.14	50'	EL	9.769	0.80	0.25	1.94	50'	EL	24.423	
		TNT4A	33.075	--	1.96	64.837	1.4	0.25	2.67	50'	EL	24.423	0.656	2.04	50'	EL	9.769	0.80	0.25	1.96	50'	EL	24.423	
		TNT6A	41.600	--	1.633	67.938	1.4	0.25	2.23	50'	EL	24.423	0.656	2	50'	EL	9.769	0.80	0.25	1.63	50'	EL	24.423	
		TNT7A	42.000	--	1.658	69.634	1.4	0.25	2.26	50'	EL	24.423	0.656	1.86	50'	EL	9.769	0.80	0.25	1.66	50'	EL	24.423	
		TNT7B	42.000	--	1.728	72.595	1.4	0.25	2.36	50'	EL	24.423	0.656	1.76	50'	EL	9.769	0.80	0.25	1.73	50'	EL	24.423	
		TNAGRIT4	43.000	--	1.64	70.537	1.4	0.25	2.24	50'	EL	24.423	0.656	1.69	50'	EL	9.769	0.80	0.25	1.64	50'	EL	24.423	
		TNAGT5A	45.000	--	1.532	68.95	1.4	0.25	2.09	50'	EL	24.423	0.656	1.75	50'	EL	9.769	0.80	0.25	1.53	50'	EL	24.423	
		TNAGT5B	45.000	3	1.501	67.548	1.4	0.25	2.05	50'	EL	24.423	0.656	1.6	50'	EL	9.769	0.80	0.25	**1.50**	50'	EL	**24.423**	

LOAD FACTORS:

DESIGN LOAD RATING FACTORS	LIMIT STATE	γ_{DC}	γ_{DW}
	STRENGTH I	1.25	1.50
	SERVICE III	1.00	1.00

NOTES:

MINIMUM RATING FACTORS ARE BASED ON THE STRENGTH I AND SERVICE III LIMIT STATES.

ALLOWABLE STRESSES FOR SERVICE III LIMIT STATE ARE AS REQUIRED FOR DESIGN.

COMMENTS:

1.
2.
3.
4.

(#) CONTROLLING LOAD RATING

(1) DESIGN LOAD RATING (HL-93)
(2) DESIGN LOAD RATING (HS-20)
(3) LEGAL LOAD RATING **
** SEE CHART FOR VEHICLE TYPE

GIRDER LOCATION

I - INTERIOR GIRDER
EL - EXTERIOR LEFT GIRDER
ER - EXTERIOR RIGHT GIRDER

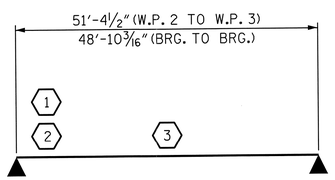

LRFR SUMMARY

FOR SPAN "B"

PROJECT NO. 17BP.9.R.29
STOKES COUNTY
STATION: 13+81.00 -L-

STATE OF NORTH CAROLINA
DEPARTMENT OF TRANSPORTATION
RALEIGH

STANDARD
LRFR SUMMARY FOR
50' CORED SLAB UNIT
60° SKEW & 120° SKEW
(NON-INTERSTATE TRAFFIC)

NORTH CAROLINA PROFESSIONAL SEAL 24939 ENGINEER BYRON E. ATKINSON
02/04/14

MI ENGINEERING
1011 SCHAUB DRIVE, SUITE 100
RALEIGH, NC 27606
(919) 851-6606
FIRM PE NUMBER : P-0671

REVISIONS						SHEET NO.
NO.	BY:	DATE:	NO.	BY:	DATE:	S-4
1			3			TOTAL SHEETS
2			4			24

STD. NO. 21LRFR1_60&120S_50L

ASSEMBLED BY : J.S. ISRAELNAIM DATE : 01/13
CHECKED BY : B.E. ATKINSON DATE : 01/13
DRAWN BY : CVC 6/10
CHECKED BY : DNS 6/10

2/4/2014
5:16:28 PM
User: bianning
Filename: P:\NC Projects\MI2002 - Div 09 Low Impact Bridge Replacement_RK&A\MI2002.04_Stokes 119 Cored Slab\17BP9R29\Structures\17BP9R29_SD_LRFR2.dgn

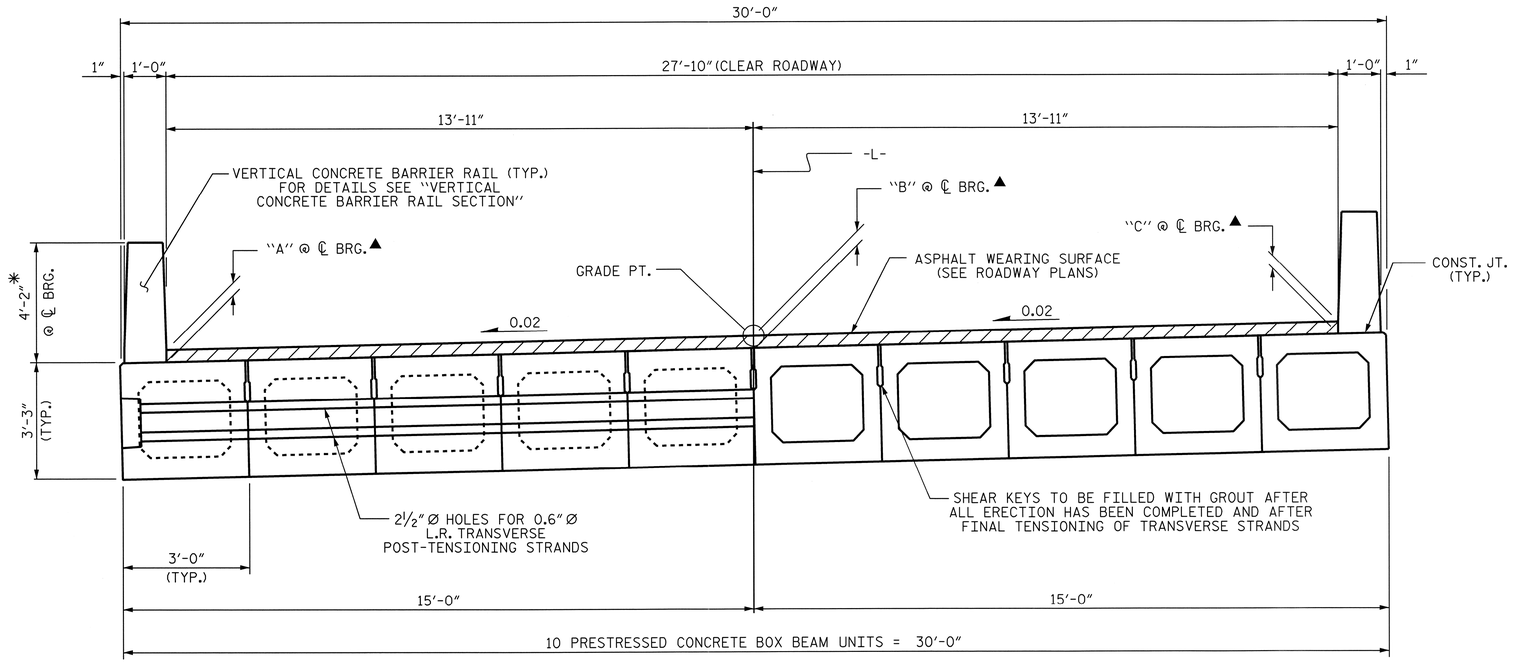

HALF SECTION
AT INTERMEDIATE DIAPHRAGMS

HALF SECTION
THROUGH VOIDS

TYPICAL SECTION - SPAN "A"

* THE MAXIMUM BARRIER RAIL HEIGHT AND ASPHALT THICKNESS IS SHOWN. THE HEIGHT OF THE BARRIER RAIL AND ASPHALT THICKNESS VARIES. FOR RAIL HEIGHT DETAILS AND ASPHALT THICKNESS, SEE THE "VERTICAL CONCRETE BARRIER RAIL DETAILS" (SHEET 5 OF 5).

▲ SEE "ASPHALT WEARING SURFACE THICKNESS" DETAIL.

NOTES

ALL PRESTRESSING STRANDS SHALL BE 7-WIRE LOW RELAXATION GRADE 270 STRANDS AND SHALL CONFORM TO AASHTO M203 EXCEPT FOR SAMPLING REQUIREMENTS WHICH SHALL BE IN ACCORDANCE WITH THE STANDARD SPECIFICATIONS.

ALL REINFORCING STEEL CAST WITH THE BOX BEAM SECTIONS SHALL BE GRADE 60 AND SHALL BE INCLUDED IN THE UNIT PRICE BID FOR PRESTRESSED CONCRETE BOX BEAMS.

RECESSES FOR TRANSVERSE STRANDS SHALL BE GROUTED AFTER THE TENSIONING OF THE STRANDS.

THE 2½" Ø DOWEL HOLES AT FIXED ENDS OF BOX BEAM SECTIONS SHALL BE FILLED WITH NON-SHRINK GROUT.

THE BACKERS ROD SHALL CONFORM TO THE REQUIREMENTS OF TYPE M BOND BREAKER. SEE SECTION 1028 OF THE STANDARD SPECIFICATIONS.

THE TRANSFER OF LOAD FROM THE ANCHORAGES TO THE BOX BEAM UNIT SHALL BE DONE WHEN THE CONCRETE HAS REACHED A COMPRESSIVE STRENGTH OF NOT LESS THAN 5500 PSI.

ALL REINFORCING STEEL IN VERTICAL CONCRETE BARRIER RAILS SHALL BE EPOXY COATED.

PRESTRESSING STRANDS SHALL BE CUT FLUSH WITH THE BOX BEAM UNIT ENDS.

APPLY EPOXY PROTECTIVE COATING TO BOX BEAM UNIT ENDS.

VERTICAL GROOVED CONTRACTION JOINTS, ½" IN DEPTH, SHALL BE TOOLED IN ALL EXPOSED FACES OF THE BARRIER RAIL AND IN ACCORDANCE WITH ARTICLE 825-10(B) OF THE STANDARD SPECIFICATIONS. A VERTICAL CONTRACTION JOINT SHALL BE LOCATED AT EACH THIRD POINT BETWEEN BARRIER RAIL EXPANSION JOINTS. ONLY ONE CONTRACTION JOINT IS REQUIRED AT MIDPOINT OF BARRIER RAIL SEGMENTS LESS THAN 20 FEET IN LENGTH AND NO CONTRACTION JOINTS ARE REQUIRED FOR THOSE SEGMENTS LESS THAN 10 FEET IN LENGTH.

THE LOCATION OF THE VOID DRAINS MAY BE SHIFTED SLIGHTLY WHERE NECESSARY TO CLEAR PRESTRESSING STRANDS OR TRANSVERSE REINFORCING STEEL.

FOR GROUT FOR STRUCTURES, SEE SPECIAL PROVISIONS.

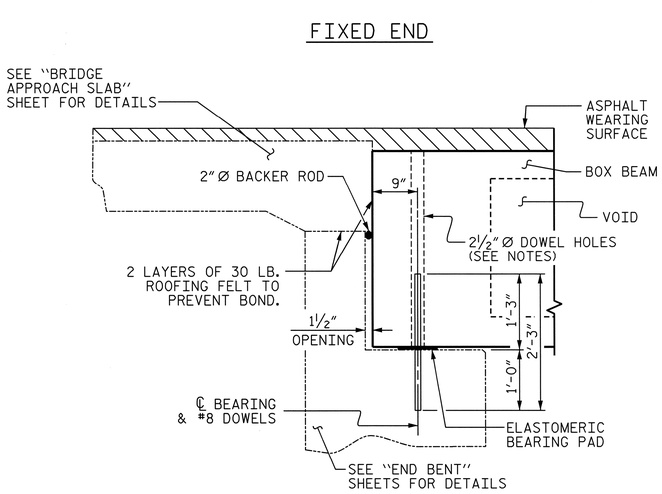

SECTION AT END BENT 1

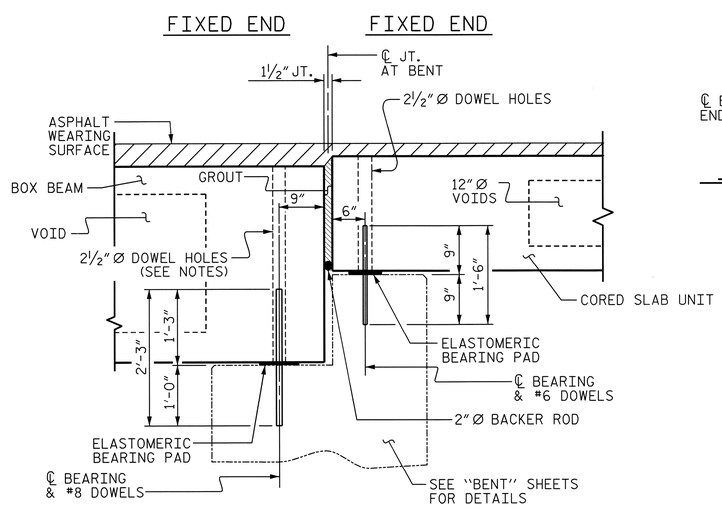

SECTION AT BENT 1

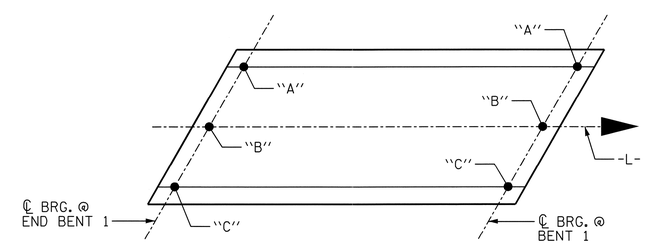

ASPHALT WEARING SURFACE THICKNESS

FOR SPAN "A"

LOCATION	"A" (LT. GUTTER)	"B" (-L-)	"C" (RT. GUTTER)
℄ BRG. @ END BENT 1	5¼"	6 7/16"	7 15/16"
℄ BRG. @ BENT 1	5¼"	5¼"	5¼"

PROJECT NO. 17BP.9.R.29

STOKES COUNTY

STATION: 13+81.00 -L-

SHEET 1 OF 5

STATE OF NORTH CAROLINA
DEPARTMENT OF TRANSPORTATION
RALEIGH

STANDARD

3'-0" X 3'-3"
PRESTRESSED CONCRETE
BOX BEAM UNIT

SPAN "A"

NORTH CAROLINA PROFESSIONAL SEAL 24939 ENGINEER BYRON E. ATKINSON
02/04/14

ASSEMBLED BY : J.S. ISRAELNAIM	DATE : 01/13
CHECKED BY : B.E. ATKINSON	DATE : 01/13
DRAWN BY : DGE 8/11	
CHECKED BY : TMG 11/11	

MI ENGINEERING
1011 SCHAUB DRIVE, SUITE 100
RALEIGH, NC 27606
(919) 851-6606
FIRM PE NUMBER : P-0671

REVISIONS							
NO.	BY:	DATE:	NO.	BY:	DATE:	SHEET NO.	S-5
1			3			TOTAL SHEETS	24
2			4				

STD. NO. 39PCBB1_30

2/4/2014
5:16:54 PM
User:blanning
Filename: P:\NC Projects\MI2002 - Div 09 Low Impact Bridge Replacement_RK&A\MI2002.04_Stokes 119 Cored Slab\17BP9R29\Structures\17BP9R29_SD_BBU1.dgn

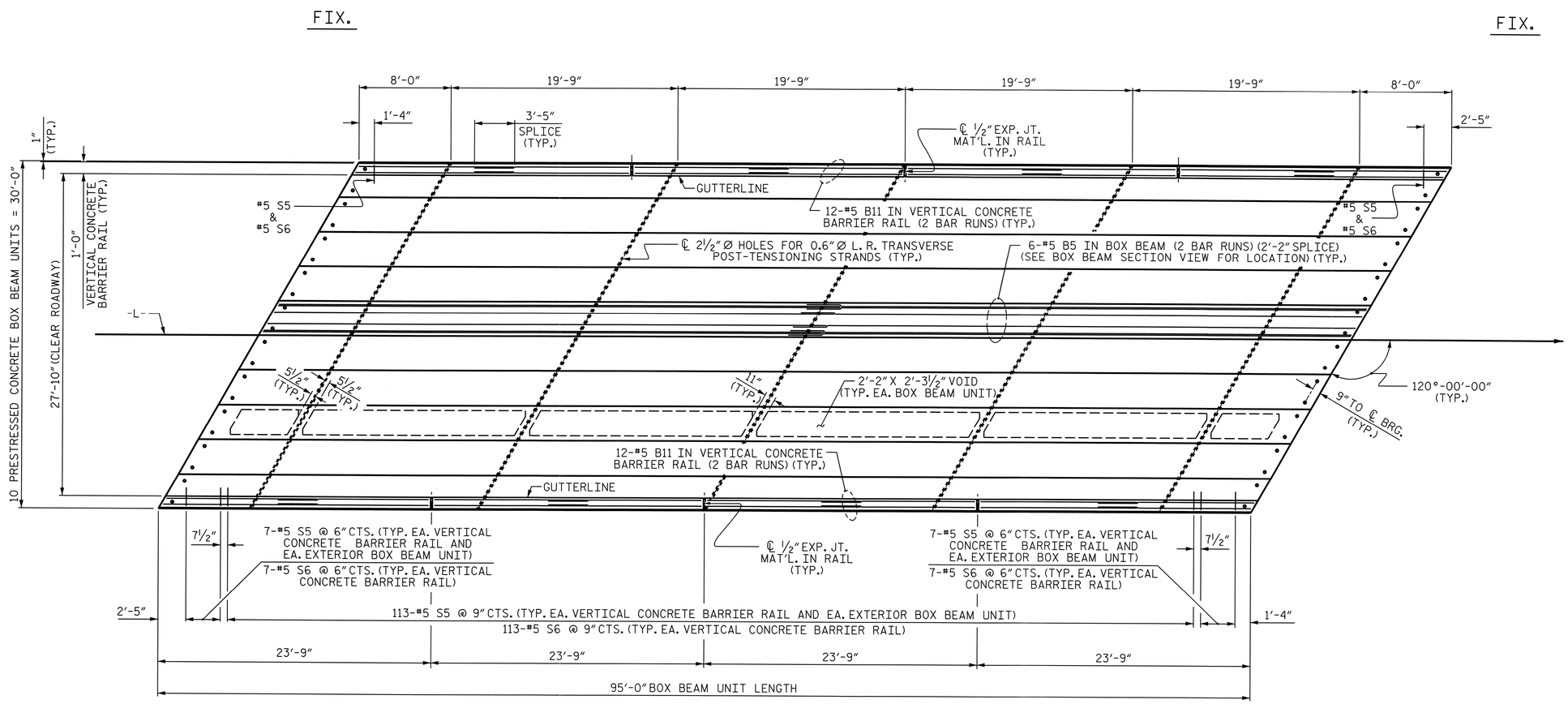

PLAN OF UNIT - SPAN "A"

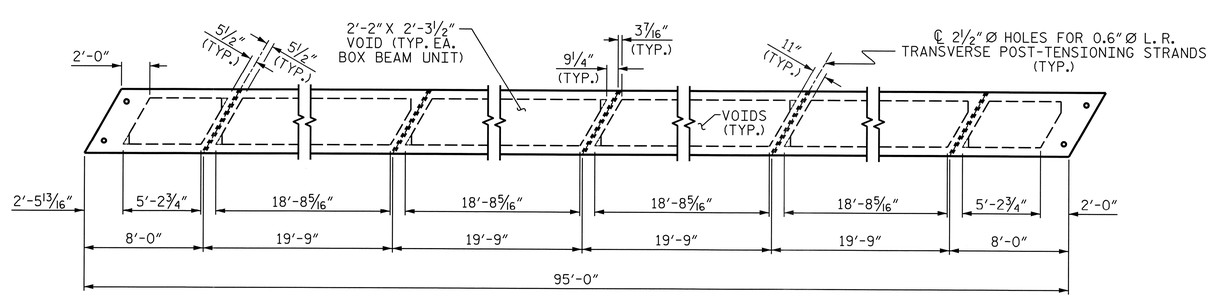

DIAPHRAGM AND VOID LAYOUT

PROJECT NO. 17BP.9.R.29

STOKES COUNTY

STATION: 13+81.00 -L-

SHEET 2 OF 5

STATE OF NORTH CAROLINA
DEPARTMENT OF TRANSPORTATION
RALEIGH

PLAN OF 95' UNIT
27'-10" CLEAR ROADWAY
120° SKEW
SPAN "A"

NORTH CAROLINA PROFESSIONAL SEAL 24939 ENGINEER BYRON E. ATKINSON
02/04/14

MI ENGINEERING
1011 SCHAUB DRIVE, SUITE 100
RALEIGH, NC 27606
(919) 851-6606
FIRM PE NUMBER : P-0671

REVISIONS						SHEET NO.
NO.	BY:	DATE:	NO.	BY:	DATE:	S-6
1			3			TOTAL SHEETS
2			4			24

ASSEMBLED BY : J.S. ISRAELNAIM	DATE : 01/13
CHECKED BY : B.E. ATKINSON	DATE : 01/13
DRAWN BY : DGE 10/11	
CHECKED BY : TMG 11/11	

STD.NO.39PCBB_30_120S_95L

2/4/2014
5:17:50 PM
User: blanning
Filename: P:\MC Projects\WI2002 - Div 09 Low Impact Bridge Replacement_RK&A\WI2002.04_Stokes 119 Cored Slab\17BP9R29\Structures\17BP9R29_SD_BBU2.dgn

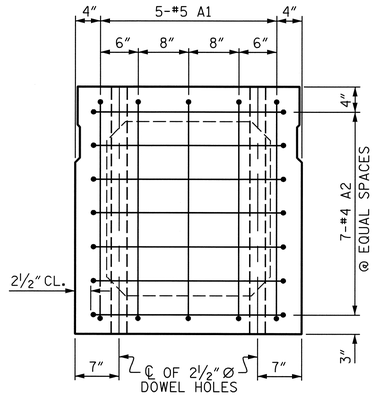

END ELEVATION

SHOWING PLACEMENT OF #5 & #4 "A" BARS AND LOCATION OF DOWEL HOLES. (INTERIOR BOX BEAM SECTION SHOWN-EXTERIOR SECTION SIMILAR EXCEPT SHEAR KEY LOCATION. STRAND LAYOUT NOT SHOWN.)

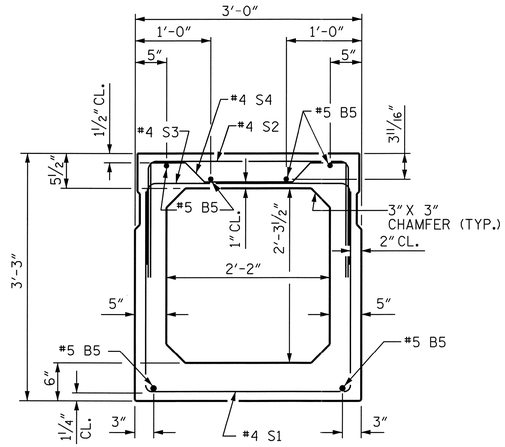

INTERIOR BOX BEAM SECTION

(STRAND LAYOUT NOT SHOWN)

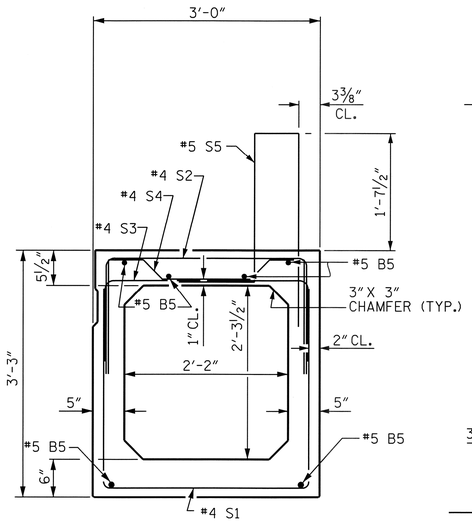

EXTERIOR BOX BEAM SECTION

(STRAND LAYOUT NOT SHOWN)

0.6" Ø LOW RELAXATION STRAND LAYOUT

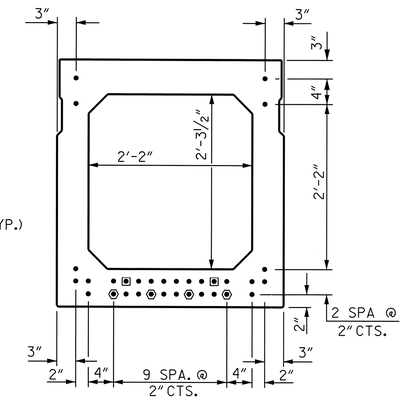

TYPICAL STRAND LOCATION

(32 STRANDS REQUIRED)

DEBONDING LEGEND

- ● FULLY BONDED STRANDS
- ◘ STRANDS DEBONDED FOR 4'-0" FROM END OF GIRDER
- ⬢ STRANDS DEBONDED FOR 12'-0" FROM END OF GIRDER

BOND SHALL BE BROKEN ON STRANDS AS SHOWN FOR THE SPECIFIED LENGTH FROM EACH END OF THE BOX BEAM. SEE STANDARD SPECIFICATIONS ARTICLE 1078-7.

GRADE 270 STRANDS	
	0.6" Ø L.R.
AREA (SQUARE INCHES)	0.217
ULTIMATE STRENGTH (LBS. PER STRAND)	58,600
APPLIED PRESTRESS (LBS. PER STRAND)	43,950

BAR TYPES

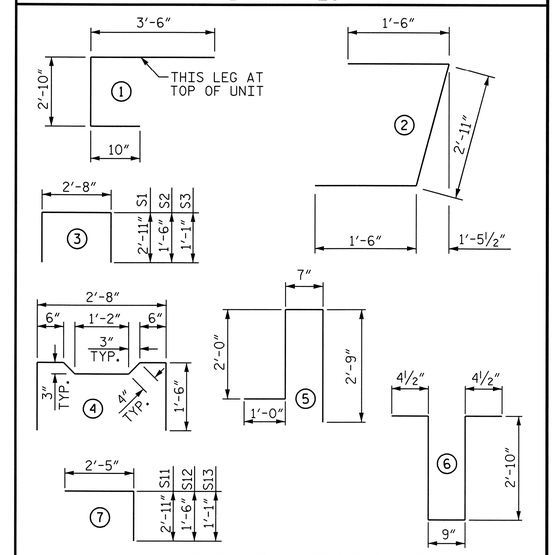

ALL BAR DIMENSIONS ARE OUT TO OUT

BILL OF MATERIAL FOR ONE BOX BEAM SECTION

				EXTERIOR UNIT		INTERIOR UNIT	
BAR	NUMBER	SIZE	TYPE	LENGTH	WEIGHT	LENGTH	WEIGHT
A1	10	#5	1	7'-2"	75	7'-2"	75
A2	44	#4	2	5'-11"	174	5'-11"	174
B5	12	#5	STR	48'-5"	606	48'-5"	606
K1	15	#4	6	7'-2"	72	7'-2"	72
K2	10	#4	STR	2'-10"	19	2'-10"	19
S1	72	#4	3	8'-6"	409	8'-6"	409
S2	72	#4	3	5'-8"	273	5'-8"	273
S3	127	#4	3	4'-10"	410	4'-10"	410
S4	55	#4	4	5'-10"	214	5'-10"	214
S11	32	#4	7	5'-4"	114	5'-4"	114
S12	32	#4	7	3'-11"	84	3'-11"	84
S13	32	#4	7	3'-6"	75	3'-6"	75
✳ S5	127	#5	5	6'-4"	839	--	--
REINFORCING STEEL				2525	LBS.	2525	LBS.
✳ EPOXY COATED REINF. STEEL				839	LBS.		
7500 P.S.I. CONCRETE				18.8	CU. YDS.	18.7	CU. YDS.
0.6" Ø L.R. STRANDS				No. 32		No. 32	

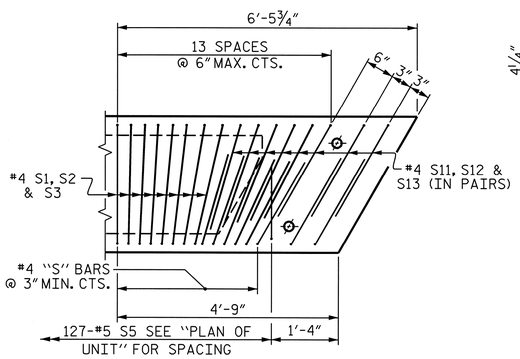

DETAIL "B"

EXTERIOR UNIT SHOWN, INTERIOR UNIT SIMILAR EXCEPT OMIT #5 S5 BARS. "B" BARS AND "A" BARS NOT SHOWN.

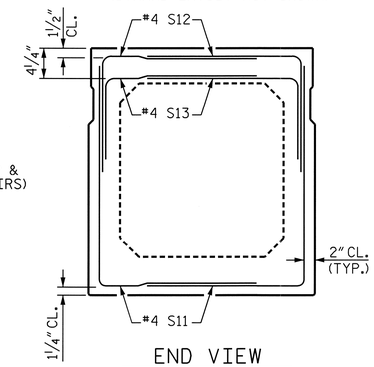

END VIEW

(SHOWING #4 "S" BARS IN END OF BEAM)

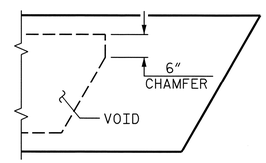

CHAMFER DETAIL

SHOWING 6" VOID CHAMFER

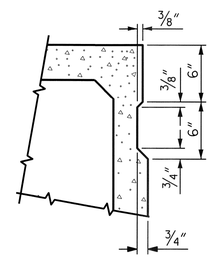

SHEAR KEY DETAIL

NOTE: OMIT SHEAR KEY ON OUTSIDE FACE OF EXTERIOR BOX BEAMS.

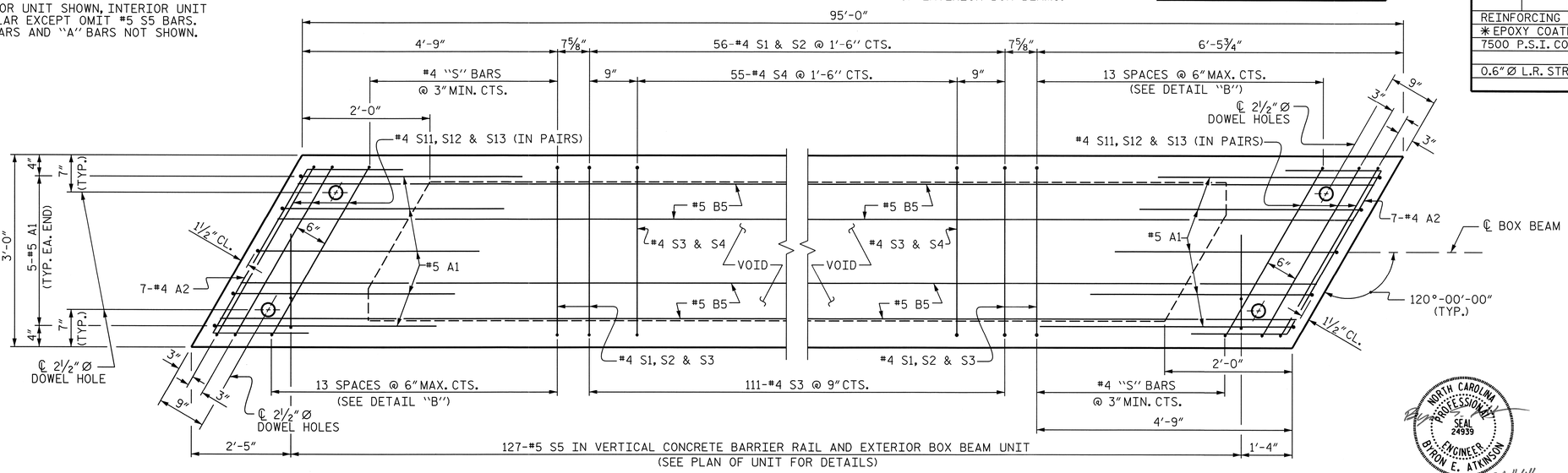

PLAN OF BOX BEAM

EXTERIOR UNIT SHOWN, INTERIOR UNIT SIMILAR EXCEPT OMIT #5 S5 BARS.
FOR LOCATION OF DIAPHRAGMS, SEE PLAN OF UNIT.
FOR REINFORCING STEEL IN DIAPHRAGMS, SEE DIAPHRAGM DETAILS.

PROJECT NO. 17BP.9.R.29
STOKES COUNTY
STATION: 13+81.00 -L-

SHEET 3 OF 5

STATE OF NORTH CAROLINA
DEPARTMENT OF TRANSPORTATION
RALEIGH

STANDARD
3'-0" X 3'-3"
PRESTRESSED CONCRETE
BOX BEAM UNIT
SPAN "A"

NORTH CAROLINA PROFESSIONAL SEAL 24939 ENGINEER BYRON E. ATKINSON
02/04/14

ASSEMBLED BY : J.S. ISRAELNAIM	DATE : 01/13
CHECKED BY : B.E. ATKINSON	DATE : 01/13
DRAWN BY : DGE 11/11	
CHECKED BY : TMG 11/11	

MI ENGINEERING
1011 SCHAUB DRIVE, SUITE 100
RALEIGH, NC 27606
(919) 851-6606
FIRM PE NUMBER : P-0671

REVISIONS						SHEET NO.
NO.	BY:	DATE:	NO.	BY:	DATE:	S-7
1			3			TOTAL SHEETS
2			4			24

STD. NO. 39PCBB6_120S_95L

2/4/2014
5:18:08 PM
User:blanning
Filename: P:\NC Projects\MI2002 - Div 09 Low Impact Bridge Replacement_RK&A\MI2002.04_Stokes 119 Cored Slab\17BP9R29\Structures\17BP9R29_SD_BBU3.dgn

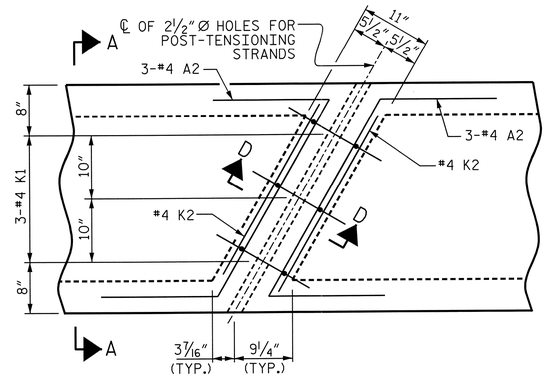

PLAN

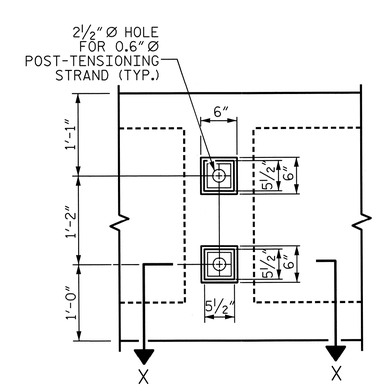

VIEW Y-Y

SHOWING ELEVATION VIEW OF GROUTED RECESS

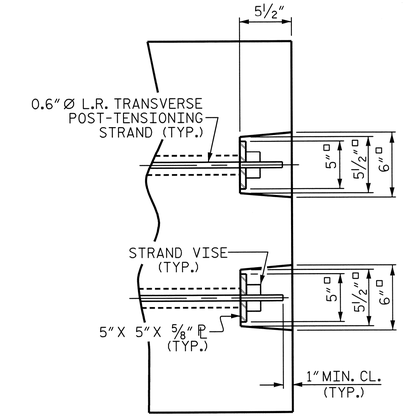

DETAIL "C"

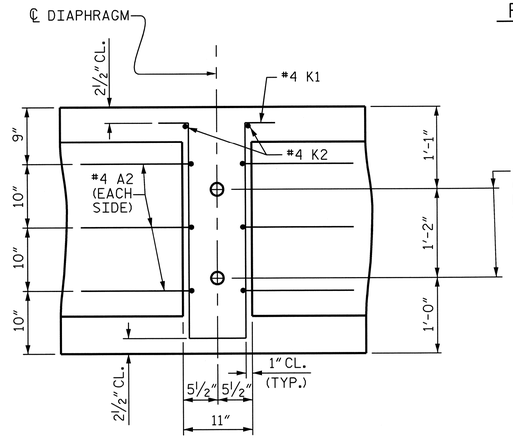

SECTION D-D

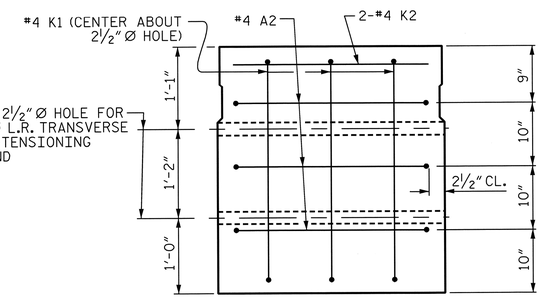

SECTION A-A

VOIDS NOT SHOWN

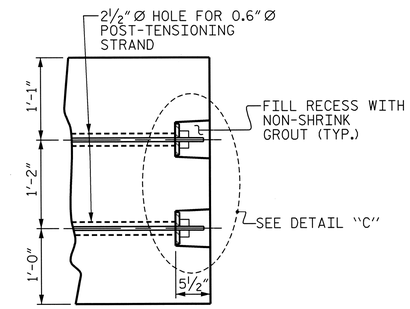

PART SECTION AT RECESS

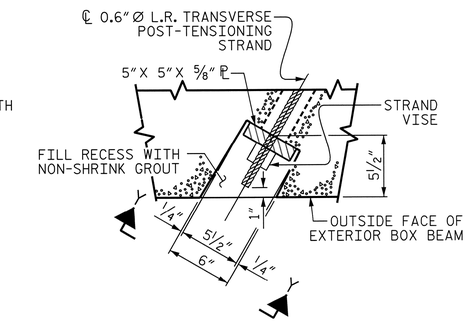

SECTION X-X

SHOWING PLAN VIEW OF GROUTED RECESS

GROUTED RECESS DETAIL AT END OF POST-TENSIONED STRANDS OF EXTERIOR BOX BEAM

DOUBLE DIAPHRAGM DETAILS

#4 "S" BARS NOT SHOWN. #4 "S" BARS MAY BE SHIFTED SLIGHTLY TO CLEAR 2" Ø HOLE.

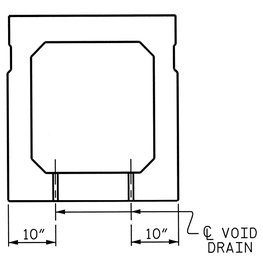

SECTION B-B

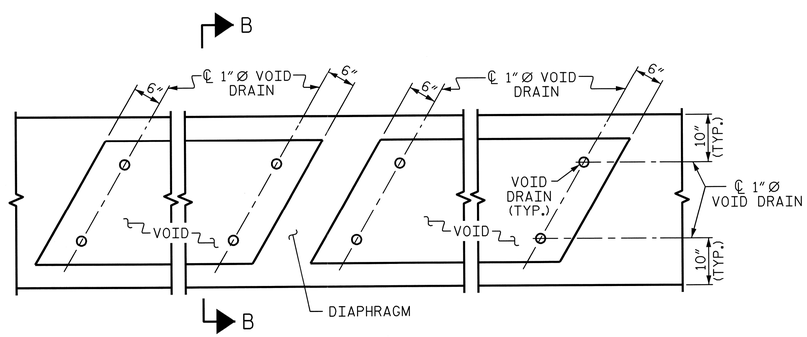

PART PLAN

VOID DRAIN DETAILS

(DIMENSIONS SHOWN ARE TYPICAL FOR EACH VOID)

DEAD LOAD DEFLECTION AND CAMBER	
	3'-0" x 3'-3"
95' BOX BEAM UNIT	0.6"Ø L.R. STRAND
CAMBER (SLAB ALONE IN PLACE)	3½" ↑
DEFLECTION DUE TO SUPERIMPOSED DEAD LOAD**	1" ↓
FINAL CAMBER	2½" ↑

** INCLUDES FUTURE WEARING SURFACE

PROJECT NO. 17BP.9.R.29

STOKES COUNTY

STATION: 13+81.00 -L-

SHEET 4 OF 5

STATE OF NORTH CAROLINA
DEPARTMENT OF TRANSPORTATION
RALEIGH

STANDARD
3'-0" X 3'-3"
PRESTRESSED CONCRETE
BOX BEAM UNIT

SPAN "A"

NORTH CAROLINA PROFESSIONAL SEAL 24939 ENGINEER BYRON E. ATKINSON
02/04/14

MI ENGINEERING
1011 SCHAUB DRIVE, SUITE 100
RALEIGH, NC 27606
(919) 851-6606
FIRM PE NUMBER : P-0671

REVISIONS						SHEET NO.
NO.	BY:	DATE:	NO.	BY:	DATE:	S-8
1			3			TOTAL SHEETS
2			4			24

ASSEMBLED BY : J.S. ISRAELNAIM DATE : 01/13
CHECKED BY : B.E. ATKINSON DATE : 01/13

DRAWN BY : DGE 11/11
CHECKED BY : TMG 11/11

STD.NO.39PCBB7_120S

2/4/2014
5:18:25 PM
User: blanning
Filename: P:\NC Projects\MI2002 - Div 09 Low Impact Bridge Replacement_RK&A\MI2002.04_Stokes 119 Cored Slab\17BP9R29\Structures\17BP9R29_SD_BBU4.dgn

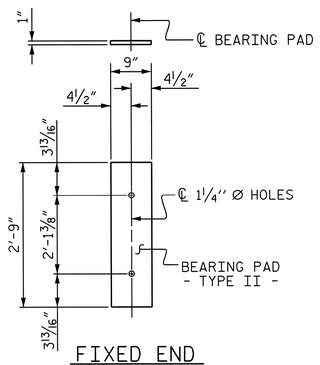

FIXED END

(TYPE II - 20 REQ'D.)

ELASTOMERIC BEARING DETAILS

ELASTOMER IN ALL BEARINGS SHALL BE 60 DUROMETER HARDNESS.

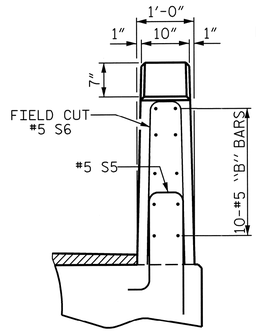

END VIEW

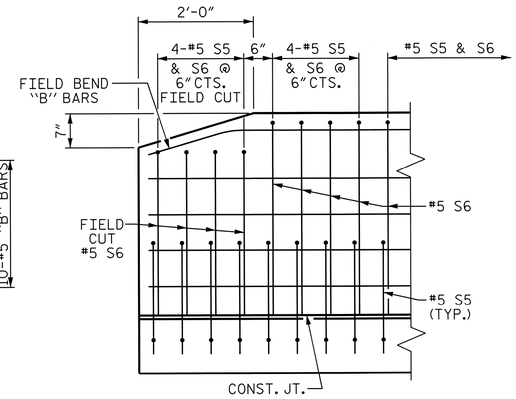

SIDE VIEW

END OF RAIL DETAILS

BOX BEAM UNITS REQUIRED

	NUMBER	LENGTH	TOTAL LENGTH
EXTERIOR B.B.	2	95'-0"	190'-0"
INTERIOR B.B.	8	95'-0"	760'-0"
TOTAL	10	———	950'-0"

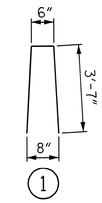

BAR TYPE

BAR DIMENSIONS ARE OUT TO OUT

GUTTERLINE ASPHALT THICKNESS & RAIL HEIGHT

	ASPHALT OVERLAY THICKNESS @ MID-SPAN	RAIL HEIGHT @ MID-SPAN
95' UNITS	⊕ 1¾"	3'-11½"

⊕ INCLUDES IMPACT OF SAG VERTICAL CURVE ALONG GRADE LINE -L-.

BILL OF MATERIAL FOR VERTICAL CONCRETE BARRIER RAIL-SPAN "A"

BAR	BARS PER PAIR OF EXTERIOR UNITS	SIZE	TYPE	LENGTH	WEIGHT
	95' UNIT				
✳ B11	192	#5	STR	13'-7"	2720
✳ S6	254	#5	1	7'-8"	2031
✳ EPOXY COATED REINFORCING STEEL			LBS.		4751
CLASS AA CONCRETE			CU.YDS.		27.3
TOTAL VERTICAL CONCRETE BARRIER RAIL			LN. FT.		190.0

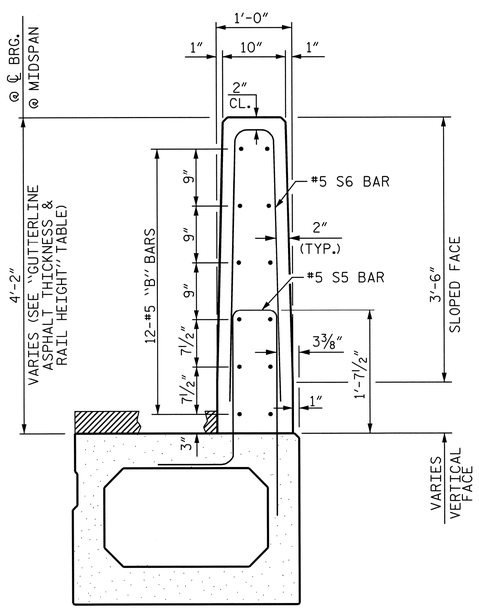

SECTION THRU RAIL

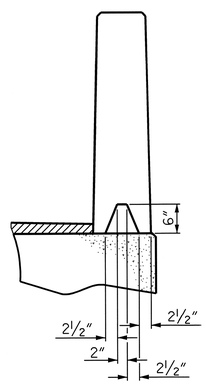

SECTION S-S

AT DAM IN OPEN JOINT
(THIS IS TO BE USED ONLY WHEN SLIP FORM IS USED)

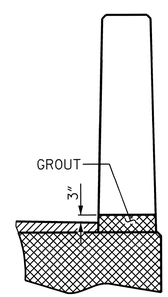

SECTION T-T

AT OPEN JOINT AT BENT
(THIS IS TO BE USED WHERE FOAM JOINT IS NOT USED)

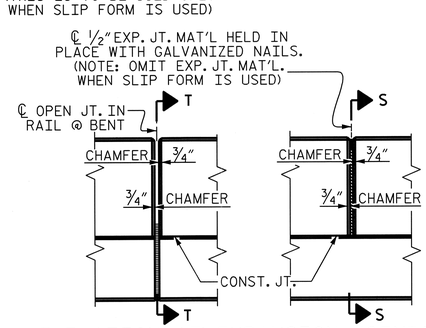

ELEVATION AT EXPANSION JOINTS

VERTICAL CONCRETE BARRIER RAIL DETAILS - SPAN "A"

PROJECT NO. 17BP.9.R.29

STOKES COUNTY

STATION: 13+81.00 -L-

SHEET 5 OF 5

STATE OF NORTH CAROLINA
DEPARTMENT OF TRANSPORTATION
RALEIGH

STANDARD

3'-0" X 3'-3"
PRESTRESSED CONCRETE
BOX BEAM UNIT

SPAN "A"

NORTH CAROLINA PROFESSIONAL SEAL 24939 ENGINEER BYRON E. ATKINSON
02/04/14

MI ENGINEERING
1011 SCHAUB DRIVE, SUITE 100
RALEIGH, NC 27606
(919) 851-6606
FIRM PE NUMBER : P-0671

REVISIONS								SHEET NO.
NO.	BY:	DATE:	NO.	BY:	DATE:			S-9
1			3					TOTAL SHEETS
2			4					24

STD. NO. 39PCBB8_60&120S

ASSEMBLED BY : J.S. ISRAELNAIM	DATE : 01/13
CHECKED BY : B.E. ATKINSON	DATE : 01/13
DRAWN BY : DGE 10/11	
CHECKED BY : TMG 11/11	

2/4/2014
5:18:42 PM
User: blanning
Filename: P:\NC Projects\MI2002 - Div 09 Low Impact Bridge Replacement_RK&A\MI2002.04_Stokes 119 Cored Slab\17BP9R29\Structures\17BP9R29_SD_BBU5.dgn

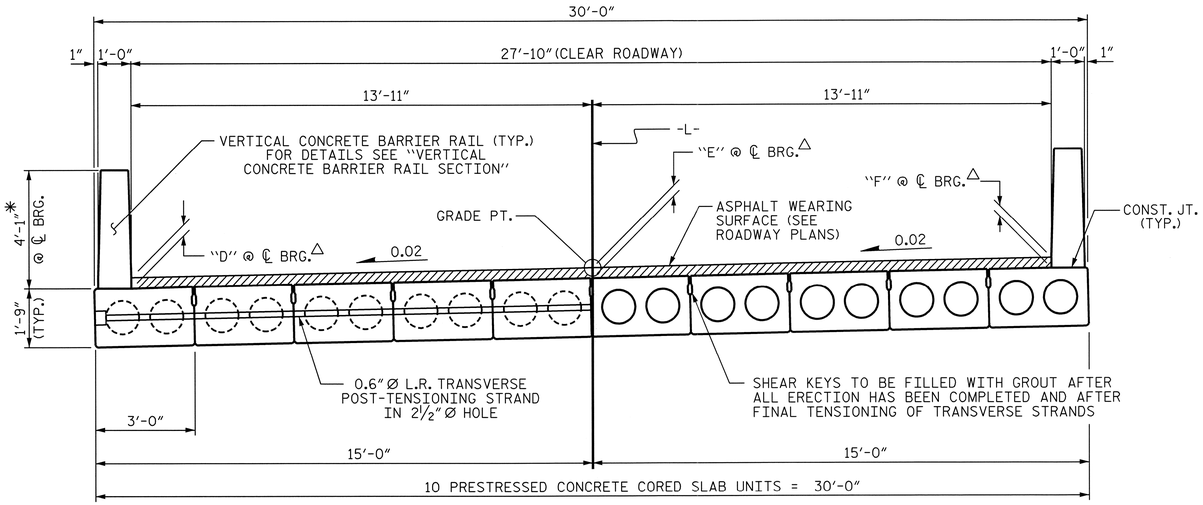

TYPICAL SECTION - SPAN "B"

* THE MAXIMUM BARRIER RAIL HEIGHT AND ASPHALT THICKNESS IS SHOWN. THE HEIGHT OF THE BARRIER RAIL AND ASPHALT THICKNESS VARIES. FOR RAIL HEIGHT DETAILS AND ASPHALT THICKNESS, SEE THE "VERTICAL CONCRETE BARRIER RAIL SECTION" DETAIL (SHEET 3 OF 3).

△ SEE "ASPHALT WEARING SURFACE THICKNESS" DETAIL.

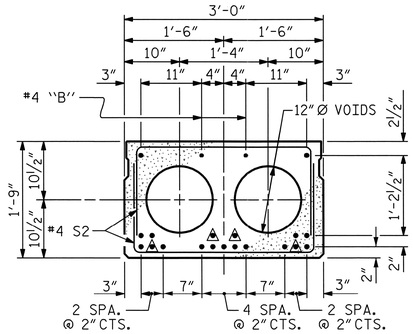

INTERIOR SLAB SECTION (50' UNIT)

(19 STRANDS REQUIRED)

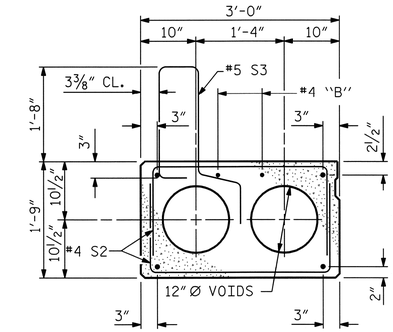

EXT. SLAB SECTION

(FOR PRESTRESSED STRAND LAYOUT, SEE INTERIOR SLAB SECTION.)

0.6" Ø LOW RELAXATION STRAND LAYOUT

● BOND SHALL BE BROKEN ON THESE STRANDS FOR A DISTANCE OF 6'-0" FROM END OF CORED SLAB UNIT. SEE STANDARD SPECIFICATIONS, ARTICLE 1078-7.

DEBONDING LEGEND

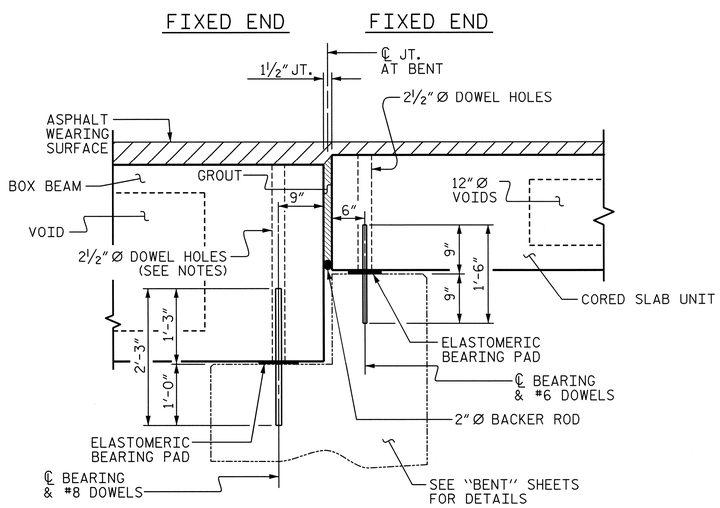

SECTION AT BENT 1

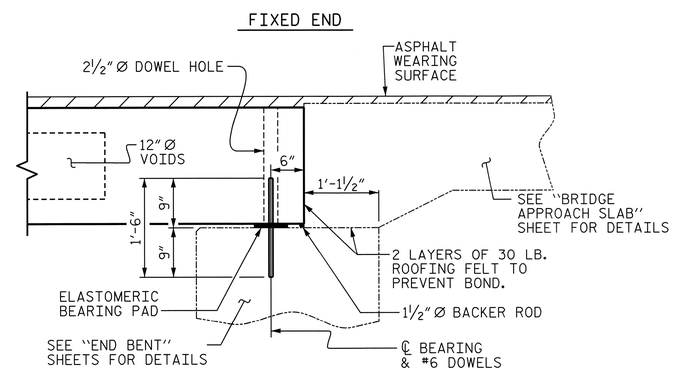

SECTION AT END BENT 2

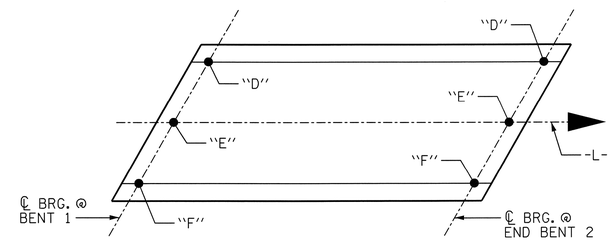

ASPHALT WEARING SURFACE THICKNESS

FOR SPAN "B"

LOCATION	"D" (LT. GUTTER)	"E" (-L-)	"F" (RT. GUTTER)
℄ BRG. @ BENT 1	4¼"	4¼"	4¼"
℄ BRG. @ END BENT 2	4¼"	3¾"	3⅝"

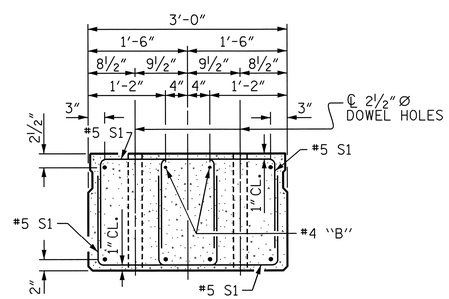

END ELEVATION

SHOWING PLACEMENT OF DOUBLE STIRRUPS AND LOCATION OF DOWEL HOLES. (STRAND LAYOUT NOT SHOWN.) INTERIOR SLAB UNIT SHOWN-EXTERIOR SLAB UNIT SIMILAR EXCEPT SHEAR KEY LOCATION.

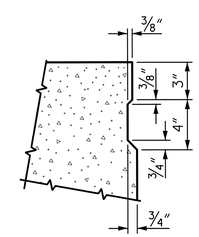

SHEAR KEY DETAIL

NOTE: OMIT SHEAR KEY ON OUTSIDE FACE OF EXTERIOR CORED SLABS.

PROJECT NO. 17BP.9.R.29

STOKES COUNTY

STATION: 13+81.00 -L-

SHEET 1 OF 3

STATE OF NORTH CAROLINA
DEPARTMENT OF TRANSPORTATION
RALEIGH

STANDARD
3'-0" X 1'-9"
PRESTRESSED CONCRETE
CORED SLAB UNIT
120° SKEW
SPAN "B"

NORTH CAROLINA PROFESSIONAL SEAL 24939 ENGINEER BYRON E. ATKINSON 02/04/14

ASSEMBLED BY : J.S. ISRAELNAIM DATE : 01/13
CHECKED BY : B.E. ATKINSON DATE : 01/13

DRAWN BY : DGE 5/09
CHECKED BY : BCH 6/09

REV. 12/11 MAA/AAC

MI ENGINEERING
1011 SCHAUB DRIVE, SUITE 100
RALEIGH, NC 27606
(919) 851-6606
FIRM PE NUMBER : P-0671

REVISIONS							
NO.	BY:	DATE:	NO.	BY:	DATE:		
1			3				
2			4				

SHEET NO. S-10

TOTAL SHEETS 24

STD. NO. 21" PCS2_30_120S

2/4/2014
5:19:02 PM
User: blanning
Filename: P:\NC Projects\MI2002 - Div 09 Low Impact Bridge Replacement_RK&A\MI2002.04_Stokes 119 Cored Slab\17BP9R29\Structures\17BP9R29_SD_CSUI.dgn

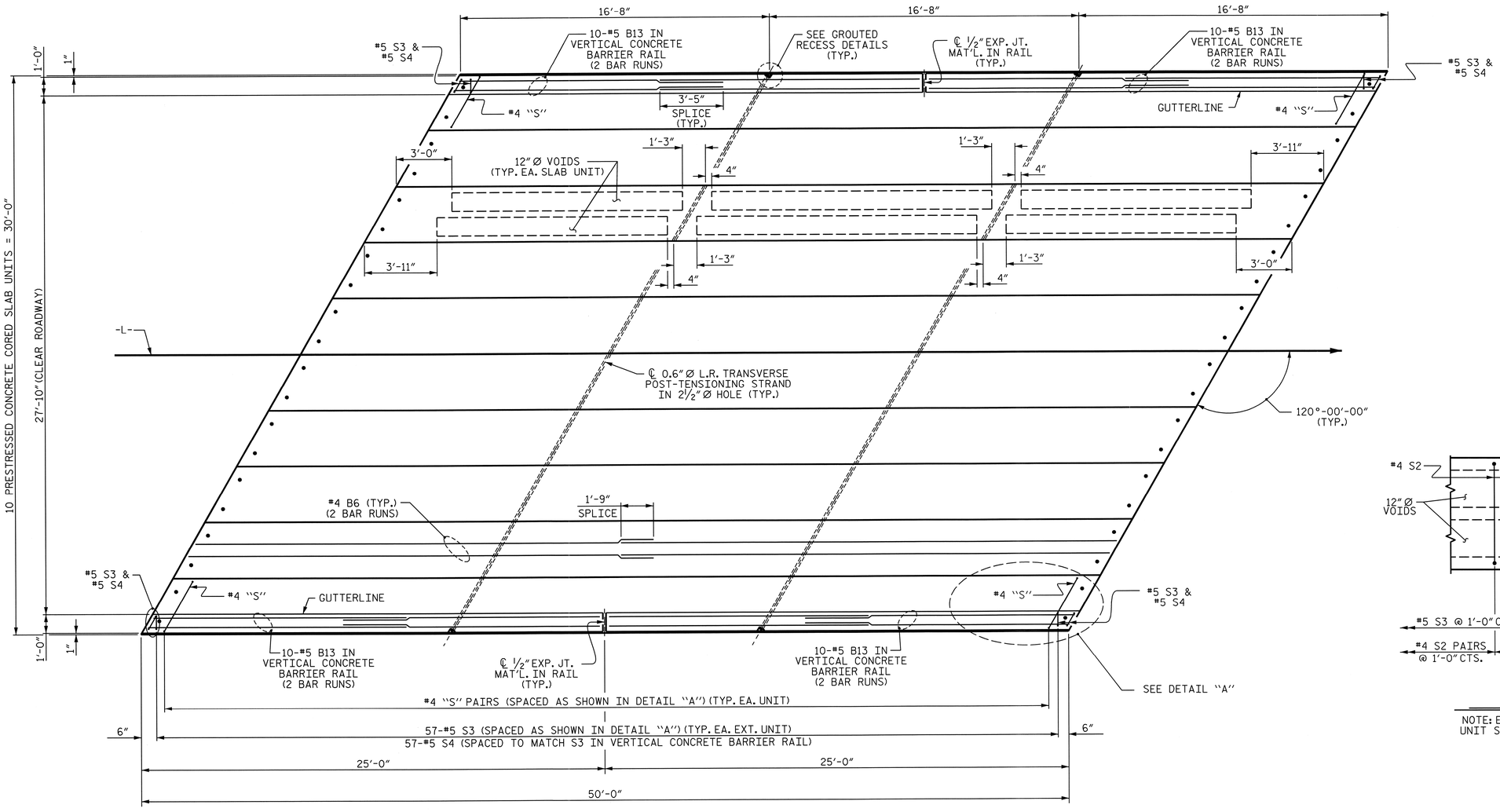

PLAN OF UNIT - SPAN "B"

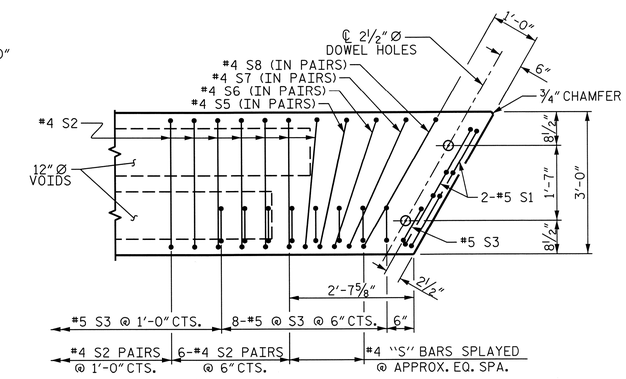

DETAIL "A"

NOTE: EXTERIOR UNIT SHOWN - INTERIOR UNIT SIMILAR EXCEPT OMIT #5 S3 BARS.

PROJECT NO. 17BP.9.R.29

STOKES COUNTY

STATION: 13+81.00 -L-

SHEET 2 OF 3

STATE OF NORTH CAROLINA
DEPARTMENT OF TRANSPORTATION
RALEIGH

PLAN OF 50' UNIT
27'-10" CLEAR ROADWAY
120° SKEW

SPAN "B"

NORTH CAROLINA PROFESSIONAL SEAL 24939 ENGINEER BYRON E. ATKINSON
02/04/14

MI ENGINEERING
1011 SCHAUB DRIVE, SUITE 100
RALEIGH, NC 27606
(919) 851-6606
FIRM PE NUMBER : P-0671

REVISIONS						SHEET NO.
NO.	BY:	DATE:	NO.	BY:	DATE:	S-11
1			3			TOTAL SHEETS
2			4			24

ASSEMBLED BY : J.S. ISRAELNAIM		DATE : 01/13	
CHECKED BY : B.E. ATKINSON		DATE : 01/13	
DRAWN BY : DGE 3/09	REV. 12/5/11	MAA/AAC	
CHECKED BY : BCH 3/09			

STD. NO. 21" PCS_30_120S_50L

2/4/2014
5:19:22 PM
User: blanning
Filename: P:\NC Projects\MI2002 - Div 09 Low Impact Bridge Replacement_RK&A\MI2002.04_Stokes 119 Cored Slab\17BP9R29\Structures\17BP9R29_SD_CSU2.dgn

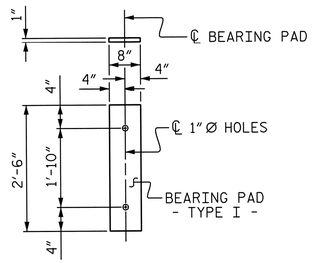

FIXED END
(TYPE I - 20 REQ'D.)

ELASTOMERIC BEARING DETAILS

ELASTOMER IN ALL BEARINGS SHALL BE 50 DUROMETER HARDNESS.

GUTTERLINE ASPHALT THICKNESS & RAIL HEIGHT

27'-10" CLEAR ROADWAY	ASPHALT OVERLAY THICKNESS @ MID-SPAN	RAIL HEIGHT @ MID-SPAN
50' UNITS	⊕ 1⅝"	3'-10¾"

⊕ INCLUDES IMPACT OF SAG VERTICAL CURVE ALONG GRADE LINE -L-.

GRADE 270 STRANDS

	0.6" Ø L.R.
AREA (SQUARE INCHES)	0.217
ULTIMATE STRENGTH (LBS. PER STRAND)	58,600
APPLIED PRESTRESS (LBS. PER STRAND)	43,950

CORED SLABS REQUIRED

	NUMBER	LENGTH	TOTAL LENGTH
50' UNIT			
EXTERIOR C.S.	2	50'-0"	100'-0"
INTERIOR C.S.	8	50'-0"	400'-0"
TOTAL	10		500'-0"

CONCRETE RELEASE STRENGTH

UNIT	PSI
50' UNITS	4900

BAR TYPES

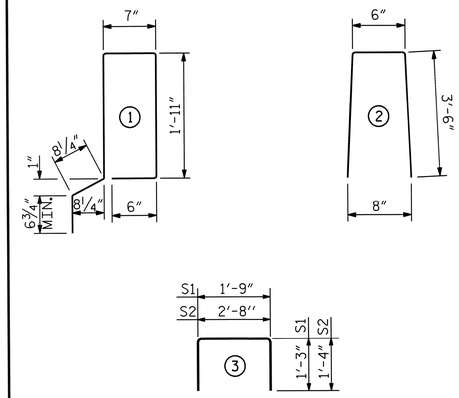

ALL BAR DIMENSIONS ARE OUT TO OUT.

BILL OF MATERIAL FOR VERTICAL CONCRETE BARRIER RAIL-SPAN "B"

BAR	BARS PER PAIR OF EXTERIOR UNITS	TOTAL NO.	SIZE	TYPE	LENGTH	WEIGHT
	50' UNIT					
✱B13	80		#5	STR	14'-3"	1189
✱S4	118		#5	2	7'-6"	923
✱EPOXY COATED REINFORCING STEEL				LBS.		2112
CLASS AA CONCRETE				CU.YDS.		14.1
TOTAL VERTICAL CONCRETE BARRIER RAIL				LN. FT.		100.29

BILL OF MATERIAL FOR ONE 50' CORED SLAB UNIT

BAR	NUMBER	SIZE	TYPE	EXTERIOR UNIT LENGTH	EXTERIOR UNIT WEIGHT	INTERIOR UNIT LENGTH	INTERIOR UNIT WEIGHT
B6	4	#4	STR	25'-8"	69	25'-8"	69
S1	8	#5	3	4'-6"	38	4'-6"	38
S2	102	#4	3	5'-4"	363	5'-4"	363
✱S3	59	#5	1	6'-2"	379		
S5	4	#4	3	5'-5"	14	5'-5"	14
S6	4	#4	3	5'-6"	15	5'-6"	15
S7	4	#4	3	5'-7"	15	5'-7"	15
S8	4	#4	3	5'-9"	15	5'-9"	15
REINFORCING STEEL			LBS.		529		529
✱EPOXY COATED REINFORCING STEEL			LBS.		379		
6500 P.S.I. CONCRETE			CU. YDS.		7.3		7.3
0.6" Ø L.R. STRANDS			No.		19		19

NOTES

ALL PRESTRESSING STRANDS SHALL BE 7-WIRE LOW RELAXATION GRADE 270 STRANDS AND SHALL CONFORM TO AASHTO M203 EXCEPT FOR SAMPLING REQUIREMENTS WHICH SHALL BE IN ACCORDANCE WITH THE STANDARD SPECIFICATIONS.

ALL REINFORCING STEEL CAST WITH THE CORED SLAB SECTIONS SHALL BE GRADE 60 AND SHALL BE INCLUDED IN THE UNIT PRICE BID FOR PRESTRESSED CONCRETE CORED SLABS.

RECESSES FOR TRANSVERSE STRANDS SHALL BE GROUTED AFTER THE TENSIONING OF THE STRANDS.

THE 2½" Ø DOWEL HOLES AT FIXED ENDS OF SLAB SECTIONS SHALL BE FILLED WITH NON-SHRINK GROUT.

THE BACKER RODS SHALL CONFORM TO THE REQUIREMENTS OF TYPE M BOND BREAKER. SEE SECTION 1028 OF THE STANDARD SPECIFICATIONS.

WHEN CORED SLABS ARE CAST, AN INTERNAL HOLD-DOWN SYSTEM SHALL BE EMPLOYED TO PREVENT VOIDS FROM RISING OR MOVING SIDEWAYS. AT LEAST SIX WEEKS PRIOR TO CASTING CORED SLABS, THE CONTRACTOR SHALL SUBMIT TO THE ENGINEER FOR REVIEW AND COMMENT, DETAILED DRAWINGS OF THE PROPOSED HOLD-DOWN SYSTEM. IN ADDITION TO STRUCTURAL DETAILS, LOCATION AND SPACING OF THE HOLD-DOWNS SHALL BE INDICATED.

ALL REINFORCING STEEL IN THE VERTICAL CONCRETE BARRIER RAIL SHALL BE EPOXY COATED.

PRESTRESSING STRANDS SHALL BE CUT FLUSH WITH THE CORED SLAB UNIT ENDS.

APPLY EPOXY PROTECTIVE COATING TO CORED SLAB UNIT ENDS.

GROOVED CONTRACTION JOINTS, ½" IN DEPTH, SHALL BE TOOLED IN ALL EXPOSED FACES OF THE BARRIER RAIL AND IN ACCORDANCE WITH ARTICLE 825-10(B) OF THE STANDARD SPECIFICATIONS. A CONTRACTION JOINT SHALL BE LOCATED AT EACH THIRD POINT BETWEEN BARRIER RAIL EXPANSION JOINTS. ONLY ONE CONTRACTION JOINT IS REQUIRED AT MIDPOINT OF BARRIER RAIL SEGMENTS LESS THAN 20 FEET IN LENGTH AND NO CONTRACTION JOINTS ARE REQUIRED FOR THOSE SEGMENTS LESS THAN 10 FEET IN LENGTH.

TRANSVERSE POST TENSIONING OF THE CORED SLAB UNITS SHALL BE DONE IN ACCORDANCE WITH THE STANDARD SPECIFICATIONS.

THE TRANSFER OF LOAD FROM THE ANCHORAGES TO THE CORED SLAB UNIT SHALL BE DONE WHEN THE CONCRETE HAS REACHED A COMPRESSIVE STRENGTH OF NOT LESS THAN THE REQUIRED STRENGTH SHOWN IN THE "CONCRETE RELEASE STRENGTH" TABLE.

FOR GROUT FOR STRUCTURES, SEE SPECIAL PROVISIONS.

DEAD LOAD DEFLECTION AND CAMBER

	3'-0" x 1'-9"
50' CORED SLAB UNIT	0.6" Ø L.R. STRAND
CAMBER (SLAB ALONE IN PLACE)	2½" ↑
DEFLECTION DUE TO SUPERIMPOSED DEAD LOAD✱✱	¼" ↓
FINAL CAMBER	2¼" ↑

✱✱ INCLUDES FUTURE WEARING SURFACE

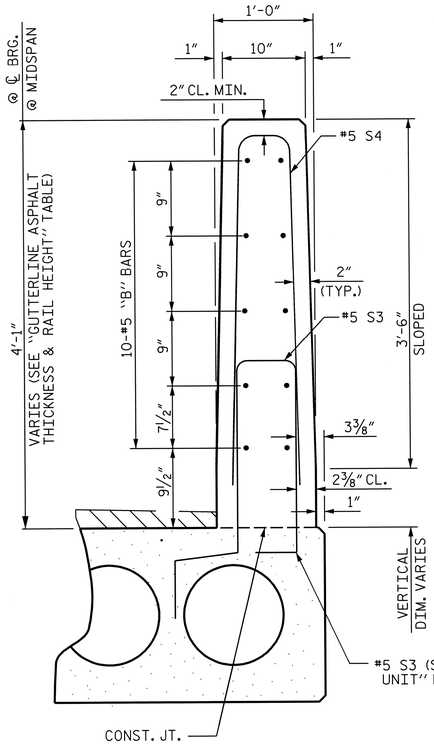

VERTICAL CONCRETE BARRIER RAIL SECTION - SPAN "B"

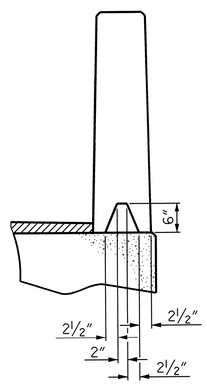

SECTION S-S
AT DAM IN OPEN JOINT
(THIS IS TO BE USED ONLY WHEN SLIP FORM IS USED)

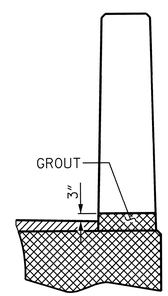

SECTION T-T
AT OPEN JOINT AT BENT
(THIS IS TO BE USED WHERE FOAM JOINT IS NOT USED)

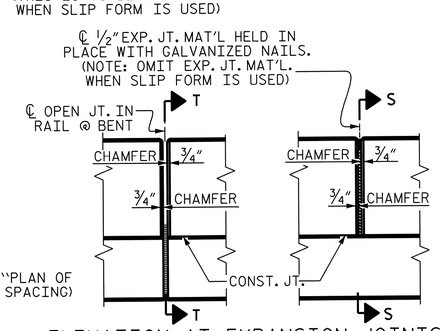

ELEVATION AT EXPANSION JOINTS

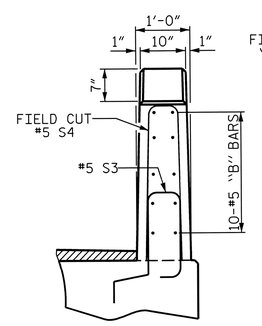

END VIEW

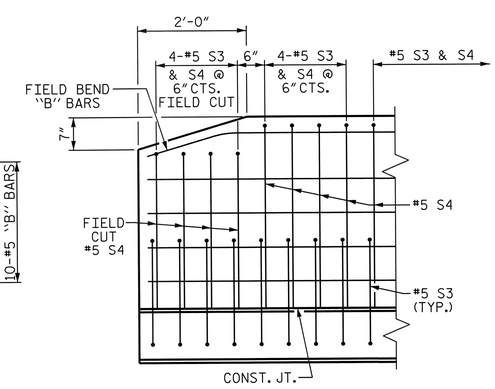

SIDE VIEW

END OF RAIL DETAILS

PROJECT NO. 17BP.9.R.29
STOKES COUNTY
STATION: 13+81.00 -L-

SHEET 3 OF 3

STATE OF NORTH CAROLINA
DEPARTMENT OF TRANSPORTATION
RALEIGH

STANDARD
3'-0" X 1'-9"
PRESTRESSED CONCRETE
CORED SLAB UNIT
120° SKEW
SPAN "B"

NORTH CAROLINA PROFESSIONAL SEAL 24939 ENGINEER BYRON E. ATKINSON
02/04/14

MI ENGINEERING
1011 SCHAUB DRIVE, SUITE 100
RALEIGH, NC 27606
(919) 851-6606
FIRM PE NUMBER : P-0671

REVISIONS								SHEET NO.
NO.	BY:	DATE:	NO.	BY:	DATE:			S-12
1			3					TOTAL SHEETS
2			4					24

ASSEMBLED BY : J.S. ISRAELNAIM DATE : 01/13
CHECKED BY : B.E. ATKINSON DATE : 01/13
DRAWN BY : DGE 5/09
CHECKED BY : BCH 6/09
REV. 12/11 MAA/AAC

STD. NO. 21" PCS3_30_120S

2/4/2014
5:19:45 PM
User: blanning
Filename: P:\NC Projects\MI2002 - Div 09 Low Impact Bridge Replacement_RK&A\MI2002.04_Stokes 119 Cored Slab\17BP9R29\Structures\17BP9R29_SD_CSU3.dgn

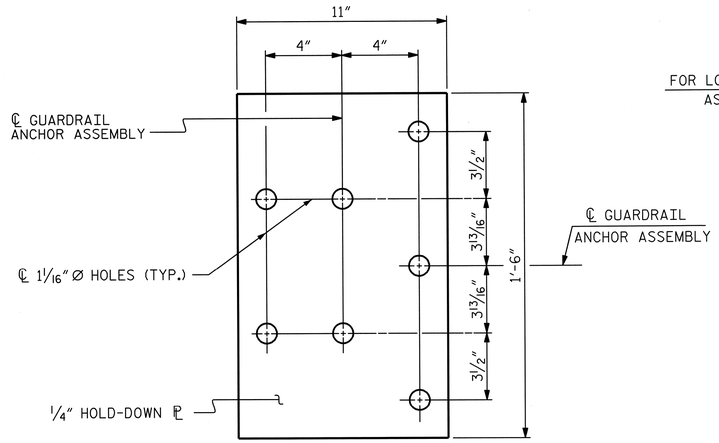

PLAN

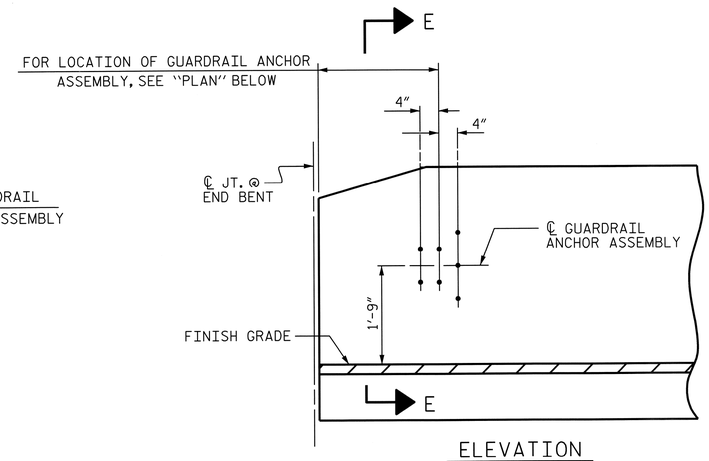

ELEVATION

NOTES

THE GUARDRAIL ANCHOR ASSEMBLY SHALL CONSIST OF A 1/4" HOLD DOWN PLATE AND 7 - 7/8" Ø BOLTS WITH NUTS AND WASHERS.

THE HOLD-DOWN PLATE SHALL CONFORM TO AASHTO M270 GRADE 36. AFTER FABRICATION, THE HOLD-DOWN PLATE SHALL BE HOT-DIP GALVANIZED IN ACCORDANCE WITH AASHTO M111.

BOLTS SHALL CONFORM TO THE REQUIREMENTS OF ASTM A307 AND NUTS SHALL CONFORM TO THE REQUIREMENTS OF AASHTO M291. BOLTS, NUTS AND WASHERS SHALL BE GALVANIZED. (AT THE CONTRACTOR'S OPTION, STAINLESS STEEL BOLTS, NUTS AND WASHERS MAY BE USED AS AN ALTERNATE FOR THE 7/8" Ø GALVANIZED BOLTS, NUTS AND WASHERS. THEY SHALL CONFORM TO OR EXCEED THE MECHANICAL REQUIREMENTS OF ASTM A307. THE USE OF THIS ALTERNATE SHALL BE APPROVED BY THE ENGINEER.)

THE GUARDRAIL ANCHOR ASSEMBLY IS REQUIRED AT ALL POINTS WHERE APPROACH GUARDRAIL IS TO BE ATTACHED TO THE END OF BARRIER RAIL. FOR POINTS OF ATTACHMENT, SEE SKETCH.

AFTER INSTALLATION, THE EXPOSED THREAD OF THE BOLT SHALL BE BURRED WITH A SHARP POINTED TOOL.

THE COST OF THE GUARDRAIL ANCHOR ASSEMBLY SHALL BE INCLUDED IN THE UNIT CONTRACT PRICE BID FOR VERTICAL CONCRETE BARRIER RAIL.

THE VERTICAL REINFORCING BARS MAY BE SHIFTED SLIGHTLY IN THE VERTICAL CONCRETE BARRIER RAIL TO CLEAR ASSEMBLY BOLTS.

THE 1 1/4" Ø HOLES SHALL BE FORMED OR DRILLED WITH A CORE BIT. IMPACT TOOLS WILL NOT BE PERMITTED. ANY CONCRETE DAMAGED BY THIS WORK SHALL BE REPAIRED TO THE SATISFACTION OF THE ENGINEER.

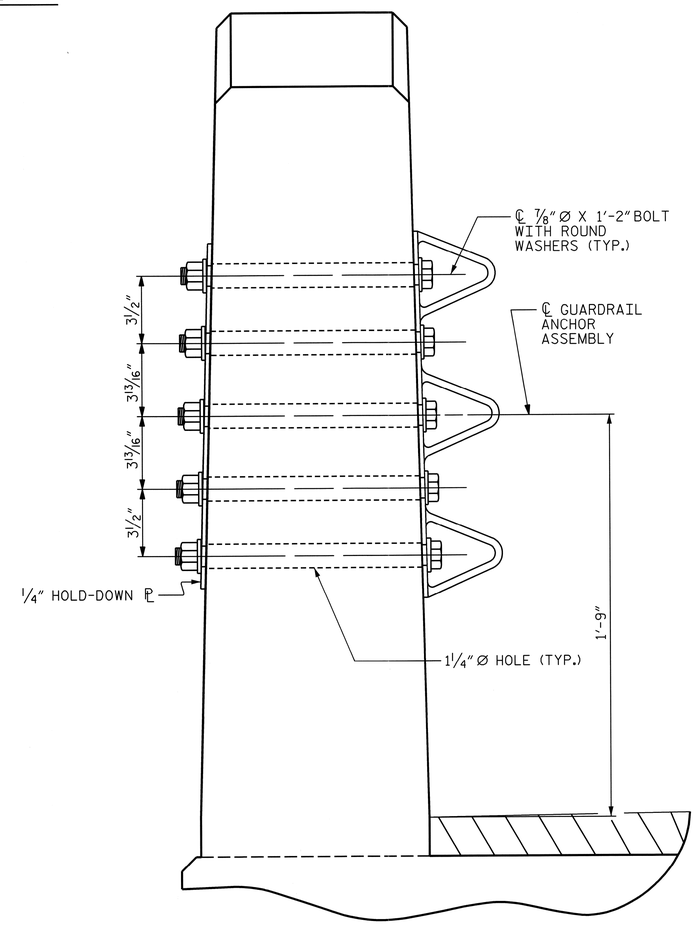

SECTION E-E

GUARDRAIL ANCHOR ASSEMBLY DETAILS

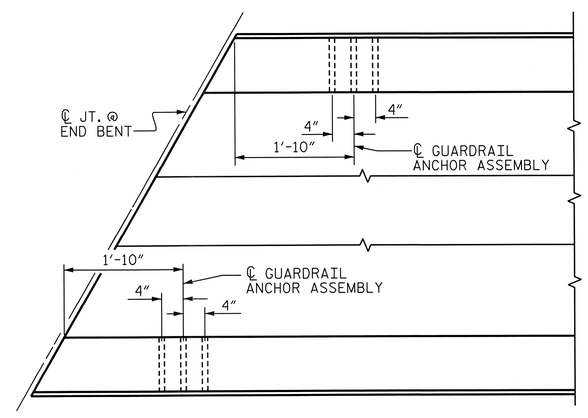

PLAN

LOCATION OF ANCHORS FOR GUARDRAIL

END BENT #1 SHOWN, END BENT #2 SIMILAR.

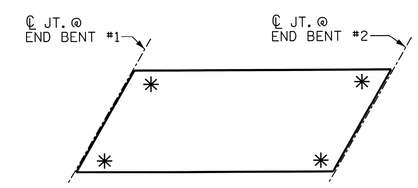

SKETCH SHOWING POINTS OF ATTACHMENT

✳ DENOTES GUARDRAIL ANCHOR ASSEMBLY

PROJECT NO. 17BP.9.R.29

STOKES COUNTY

STATION: 13+81.00 -L-

NORTH CAROLINA PROFESSIONAL SEAL 24939 ENGINEER BYRON E. ATKINSON

02/04/14

STATE OF NORTH CAROLINA
DEPARTMENT OF TRANSPORTATION
RALEIGH

STANDARD
GUARDRAIL ANCHORAGE FOR VERTICAL CONCRETE BARRIER RAIL

MI ENGINEERING
1011 SCHAUB DRIVE, SUITE 100
RALEIGH, NC 27606
(919) 851-6606
FIRM PE NUMBER : P-0671

REVISIONS							SHEET NO.
NO.	BY:	DATE:	NO.	BY:	DATE:		S-13
1			3				TOTAL SHEETS
2			4				24

(SHT 2) STD. NO. GRA3

ASSEMBLED BY : J.S. ISRAELNAIM		DATE : 01/13	
CHECKED BY : B.E. ATKINSON		DATE : 01/13	
DRAWN BY : MAA 5/10	ADDED 5/6/10		
CHECKED BY : GM 5/10	REV. 10/1/11	MAA/GM	
	REV. 12/5/11	MAA/GM	

2/4/2014
5:20:07 PM
User: blanning
Filename: P:\NC Projects\MI2002 - Div 09 Low Impact Bridge Replacement_RK&A\MI2002.04_Stokes 119 Cored Slab\17BP9R29\Structures\17BP9R29_SD_GRA1.dgn

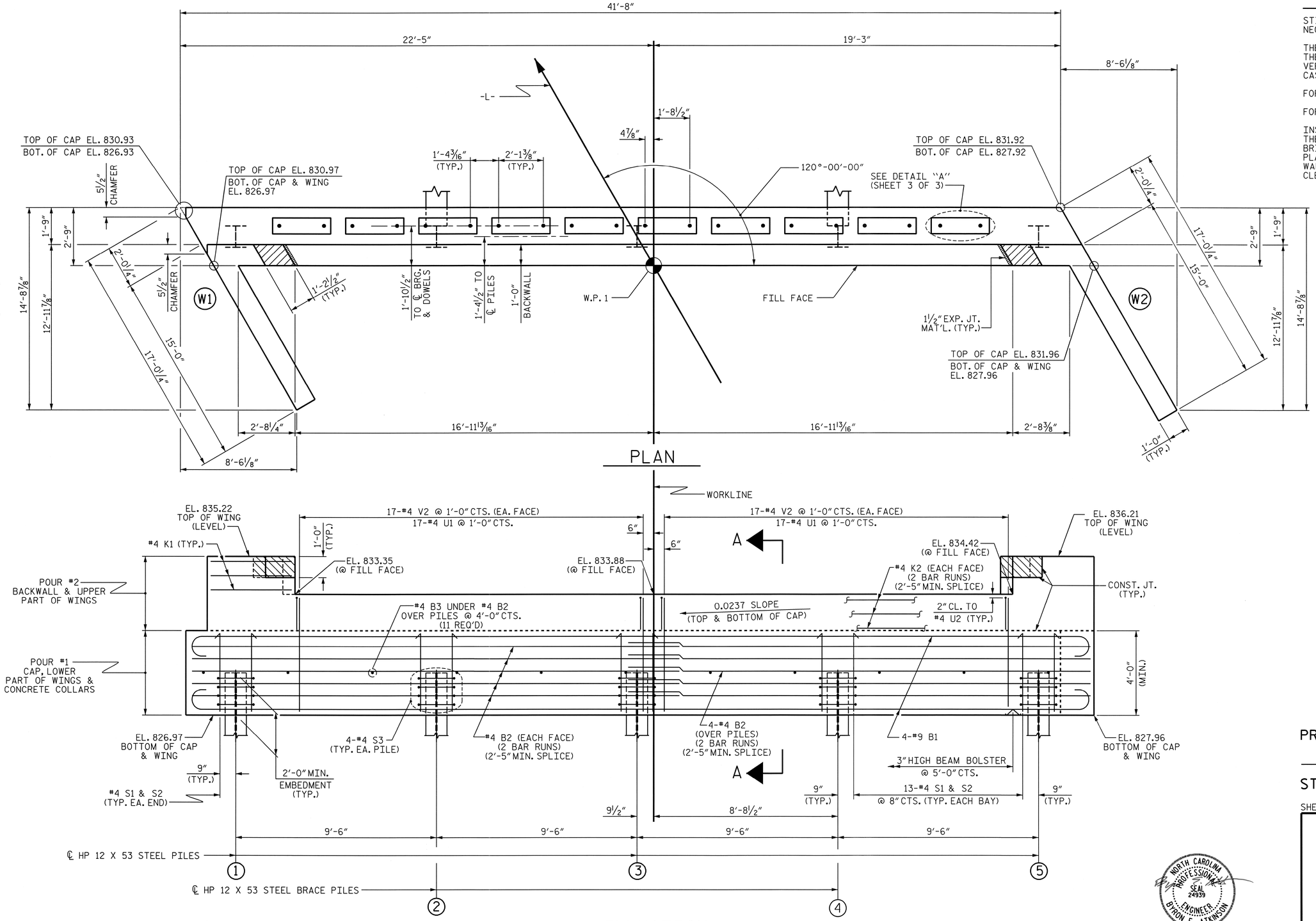

PLAN

ELEVATION

WINGS NOT SHOWN FOR CLARITY.
FOR SECTION A-A, SEE SHEET 3 OF 3.
CONCRETE COLLARS FOR STEEL PILES NOT SHOWN IN PLAN AND ELEVATION VIEWS FOR CLARITY.
SEE "CORROSION PROTECTION FOR STEEL PILES DETAIL", SHEET 3 OF 3.

NOTES

STIRRUPS IN CAP MAY BE SHIFTED AS NECESSARY TO CLEAR DOWELS.

THE CONCRETE IN THE SHADED AREA OF THE WING SHALL BE POURED AFTER THE VERTICAL CONCRETE BARRIER RAIL IS CAST IF SLIP FORMING IS USED.

FOR PILE SPLICE DETAILS, SEE SHEET 3 OF 3.

FOR WING DETAILS, SEE SHEET 2 OF 3.

INSTALL THE 4" DIA. DRAIN PIPE THROUGH THE WING WALL AS REQUIRED FOR REINFORCED BRIDGE APPROACH FILLS, SEE THE ROADWAY PLANS. REINFORCING STEEL IN THE WING WALL MAY BE SHIFTED AS NECESSARY TO CLEAR THE DRAIN PIPE.

TOP OF PILE ELEVATIONS

1	828.99
2	829.22
3	829.44
4	829.67
5	829.90

PROJECT NO. 17BP.9.R.29
STOKES COUNTY
STATION: 13+81.00 -L-

SHEET 1 OF 3

STATE OF NORTH CAROLINA
DEPARTMENT OF TRANSPORTATION
RALEIGH

SUBSTRUCTURE

END BENT No. 1

NORTH CAROLINA PROFESSIONAL SEAL 24939 ENGINEER BYRON E. ATKINSON
02/04/14

ASSEMBLED BY : B.E. LANNING DATE : 01/13
CHECKED BY : B.E. ATKINSON DATE : 01/13
DRAWN BY : WJH 12/11
CHECKED BY : AAC 12/11

MI ENGINEERING
1011 SCHAUB DRIVE, SUITE 100
RALEIGH, NC 27606
(919) 851-6606
FIRM PE NUMBER : P-0671

REVISIONS								SHEET NO.
NO.	BY:	DATE:	NO.	BY:	DATE:			S-14
1			3					TOTAL SHEETS
2			4					24

STD. NO. EB_30_120S4_39BB

2/4/2014
5:20:50 PM
User: blanning
Filename: P:\NC Projects\MI2002 - Div 09 Low Impact Bridge Replacement_RK&A\MI2002.04_Stokes 119 Cored Slab\17BP9R29\Structures\17BP9R29_SD_EB11A.dgn

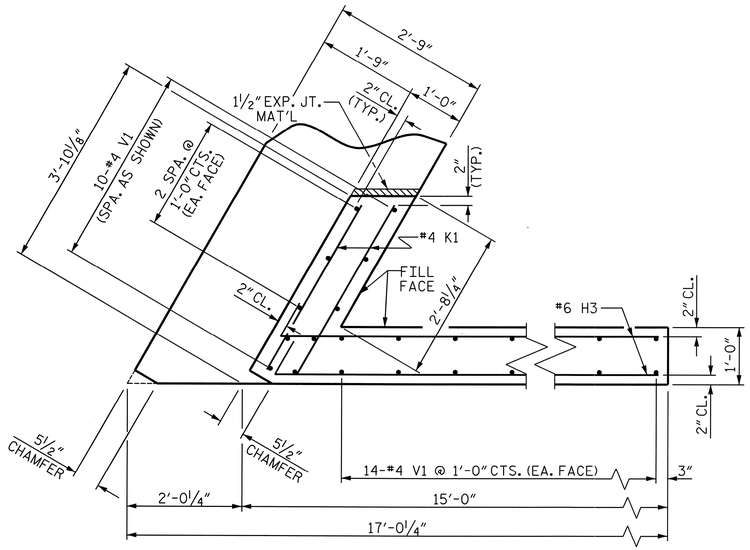

PLAN OF WING (W1)

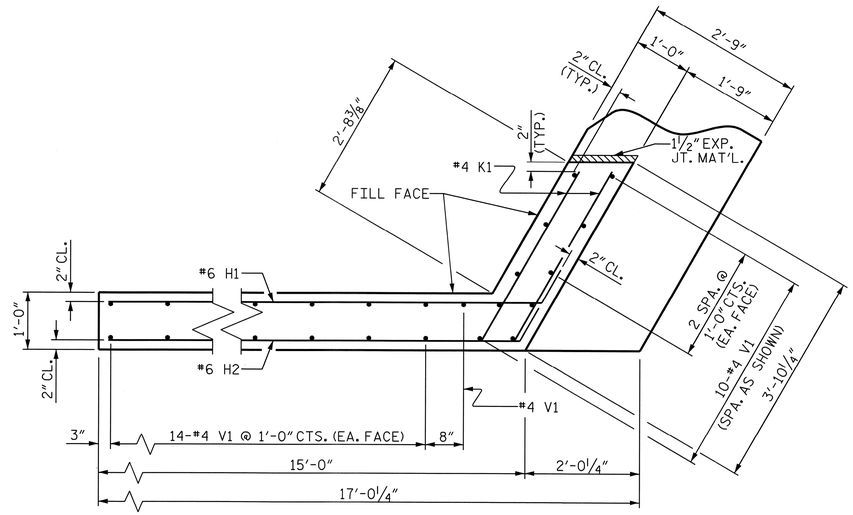

PLAN OF WING (W2)

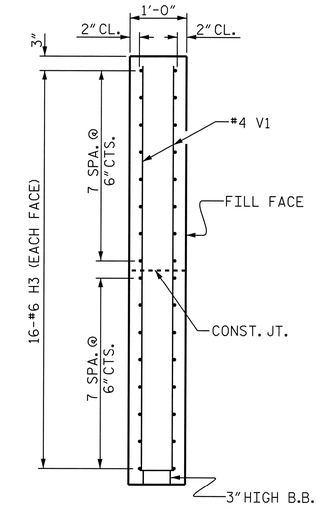

SECTION X-X

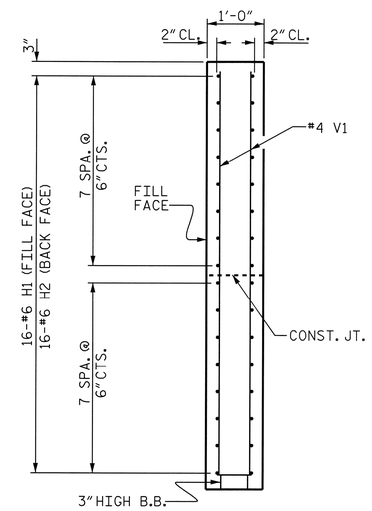

SECTION Y-Y

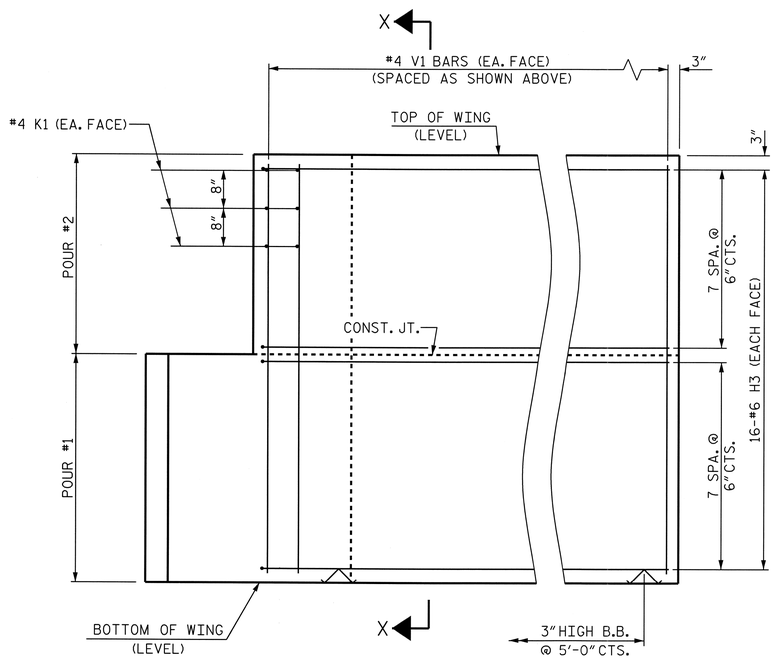

ELEVATION OF WING (W1)

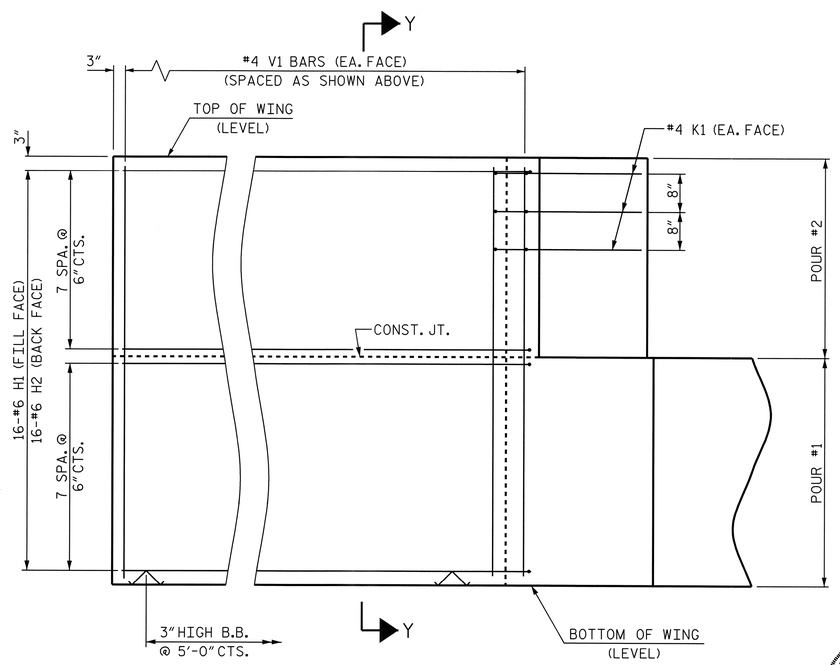

ELEVATION OF WING (W2)

WING DETAILS

PROJECT NO. 17BP.9.R.29

STOKES COUNTY

STATION: 13+81.00 -L-

SHEET 2 OF 3

STATE OF NORTH CAROLINA
DEPARTMENT OF TRANSPORTATION
RALEIGH

SUBSTRUCTURE

END BENT No. 1
WING DETAILS

NORTH CAROLINA PROFESSIONAL SEAL 24939 ENGINEER BYRON E. ATKINSON
02/04/14

ASSEMBLED BY : B.E. LANNING	DATE : 01/13
CHECKED BY : B.E. ATKINSON	DATE : 01/13
DRAWN BY : WJH 12/11	
CHECKED BY : AAC 12/11	

MI ENGINEERING
1011 SCHAUB DRIVE, SUITE 100
RALEIGH, NC 27606
(919) 851-6606
FIRM PE NUMBER : P-0671

REVISIONS							
NO.	BY:	DATE:	NO.	BY:	DATE:	SHEET NO.	S-15
1			3			TOTAL SHEETS	24
2			4				

STD. NO. EB_30_120S4_39BB

2/4/2014
5:21:06 PM
User: blanning
Filename: P:\NC Projects\MI2002 - Div 09 Low Impact Bridge Replacement_RK&A\MI2002.04_Stokes 119 Cored Slab\17BP9R29\Structures\17BP9R29_SD_EBT1B.dgn

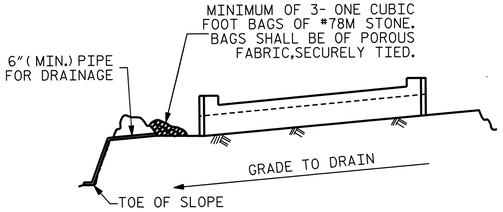

BAGGED STONE AND PIPE SHALL BE PLACED IMMEDIATELY AFTER COMPLETION OF END BENT EXCAVATION. PIPE MAY BE EITHER CONCRETE, CORRUGATED STEEL, CORRUGATED ALUMINUM ALLOY, OR CORRUGATED PLASTIC. PERFORATED PIPE WILL NOT BE ALLOWED.

BAGGED STONE SHALL REMAIN IN PLACE UNTIL THE ENGINEER DIRECTS THAT IT BE REMOVED. THE CONTRACTOR SHALL REMOVE AND DISPOSE OF SILT ACCUMULATIONS AT BAGGED STONE WHEN SO DIRECTED BY THE ENGINEER. BAGS SHALL BE REMOVED AND REPLACED WHENEVER THE ENGINEER DETERMINES THAT THEY HAVE DETERIORATED AND LOST THEIR EFFECTIVENESS.

NO SEPARATE PAYMENT WILL BE MADE FOR THIS WORK AND THE ENTIRE COST OF THIS WORK SHALL BE INCLUDED IN THE UNIT CONTRACT PRICE BID FOR THE SEVERAL PAY ITEMS.

TEMPORARY DRAINAGE AT END BENT

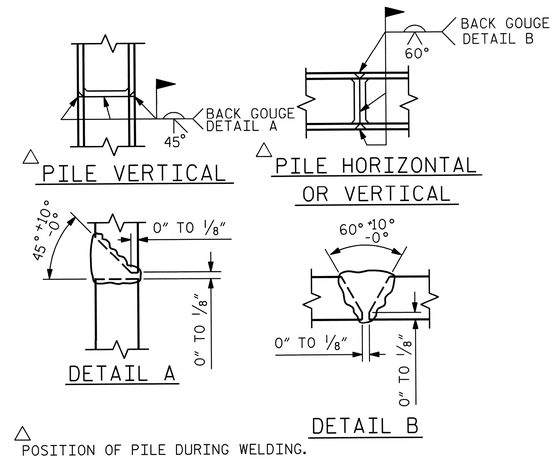

PILE SPLICE DETAILS

BAR TYPES

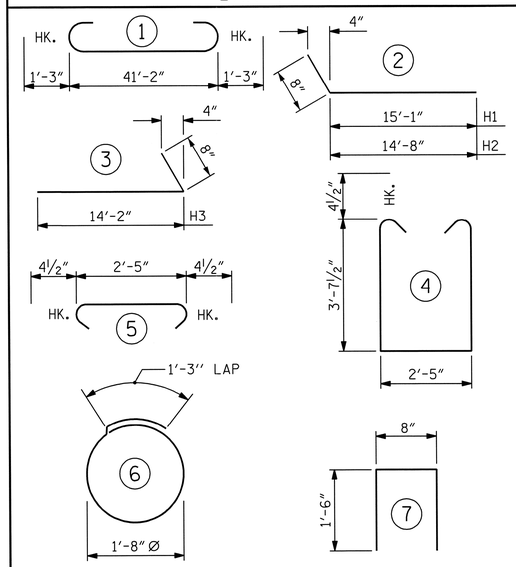

ALL BAR DIMENSIONS ARE OUT TO OUT.

END BENT No. 1
HP 12 X 53 STEEL PILES
NO: 5 LIN. FT.= 135

BILL OF MATERIAL
END BENT No. 1

BAR	NO.	SIZE	TYPE	LENGTH	WEIGHT
B1	8	#9	1	43'-8"	1188
B2	28	#4	STR	21'-11"	410
B3	11	#4	STR	2'-5"	18
D2	20	#8	STR	2'-3"	120
H1	16	#6	2	15'-9"	379
H2	16	#6	2	15'-4"	368
H3	32	#6	3	14'-10"	713
K1	12	#4	STR	3'-3"	26
K2	12	#4	STR	21'-11"	176
S1	54	#4	4	10'-5"	376
S2	54	#4	5	3'-2"	114
S3	20	#4	6	6'-6"	87
U1	34	#4	7	3'-8"	83
V1	77	#4	STR	7'-11"	407
V2	68	#4	STR	5'-11"	269

REINFORCING STEEL (FOR ONE END BENT) 4734 LBS.

CLASS A CONCRETE BREAKDOWN

POUR #1	CAP, LOWER PART OF WINGS & COLLARS	22.0 C.Y.
POUR #2	BACKWALL & UPPER PART OF WINGS	8.7 C.Y.
TOTAL CLASS A CONCRETE		30.7 C.Y.

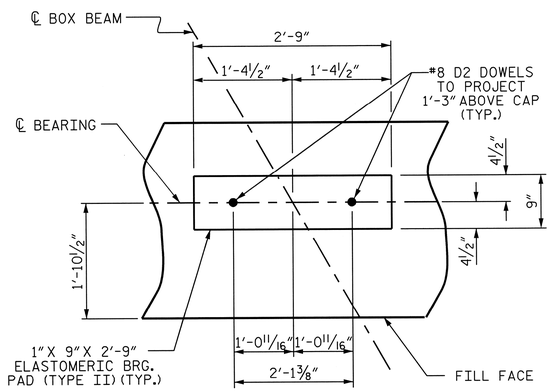

DETAIL "A"

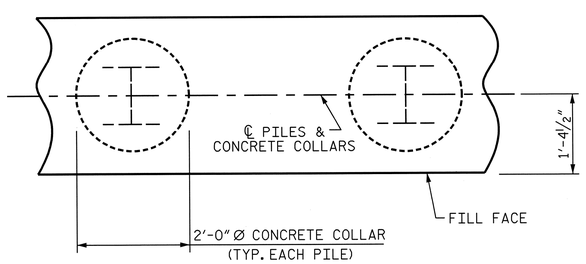

PLAN

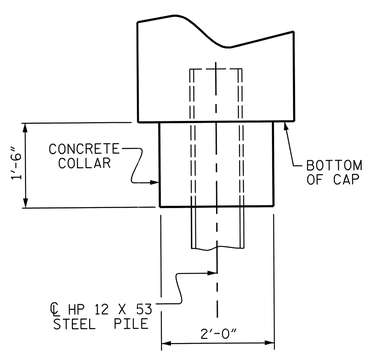

ELEVATION

CORROSION PROTECTION FOR STEEL PILES DETAIL

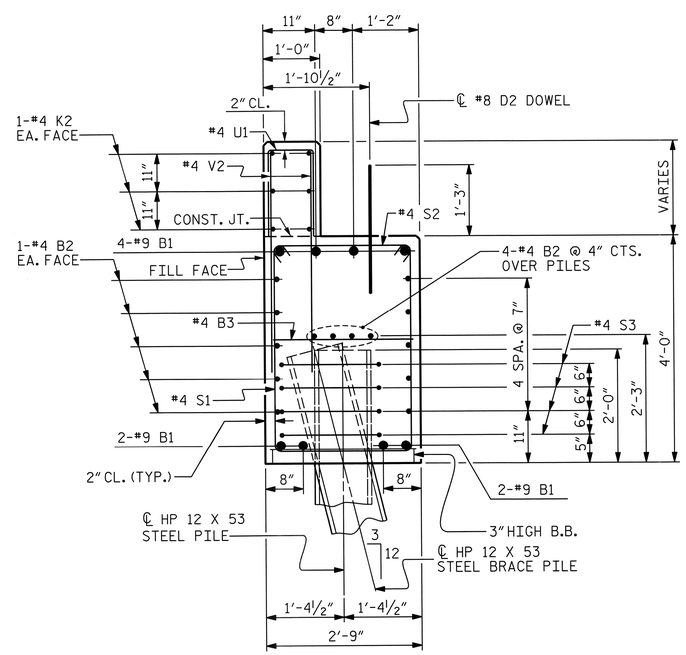

SECTION A-A

(CONCRETE COLLAR NOT SHOWN FOR CLARITY. SEE "CORROSION PROTECTION FOR STEEL PILES DETAIL.")

PROJECT NO. 17BP.9.R.29
STOKES COUNTY
STATION: 13+81.00 -L-

SHEET 3 OF 3

STATE OF NORTH CAROLINA
DEPARTMENT OF TRANSPORTATION
RALEIGH

SUBSTRUCTURE

END BENT No. 1
DETAILS

NORTH CAROLINA PROFESSIONAL SEAL 24939 ENGINEER BYRON E. ATKINSON
02/04/14

MI ENGINEERING
1011 SCHAUB DRIVE, SUITE 100
RALEIGH, NC 27606
(919) 851-6606
FIRM PE NUMBER : P-0671

REVISIONS								SHEET NO.
NO.	BY:	DATE:	NO.	BY:	DATE:			S-16
1			3					TOTAL SHEETS
2			4					24

ASSEMBLED BY : B.E. LANNING DATE : 01/13
CHECKED BY : B.E. ATKINSON DATE : 01/13
DRAWN BY : WJH 12/11
CHECKED BY : AAC 12/11

STD. NO. EB_30_120S4_39BB

2/4/2014
5:21:22 PM
User: blanning
Filename: P:\NC Projects\M12002 - Div 09 Low Impact Bridge Replacement_RK&A\M12002.04_Stokes 119 Cored Slab\17BP9R29\Structures\17BP9R29_SD_EB11C.dgn

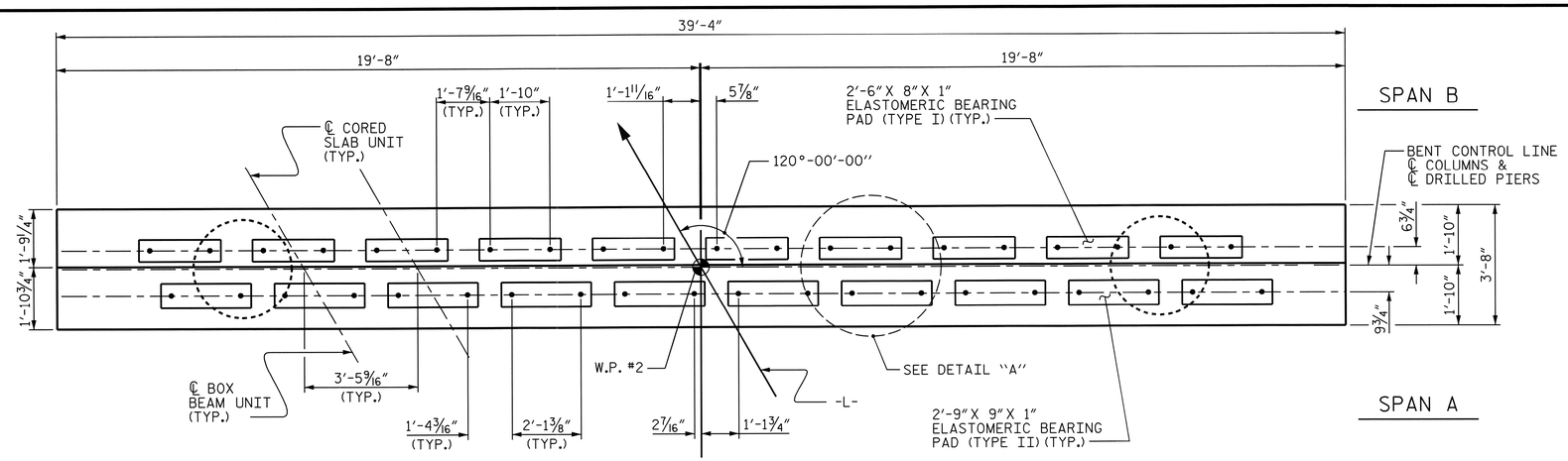

PLAN

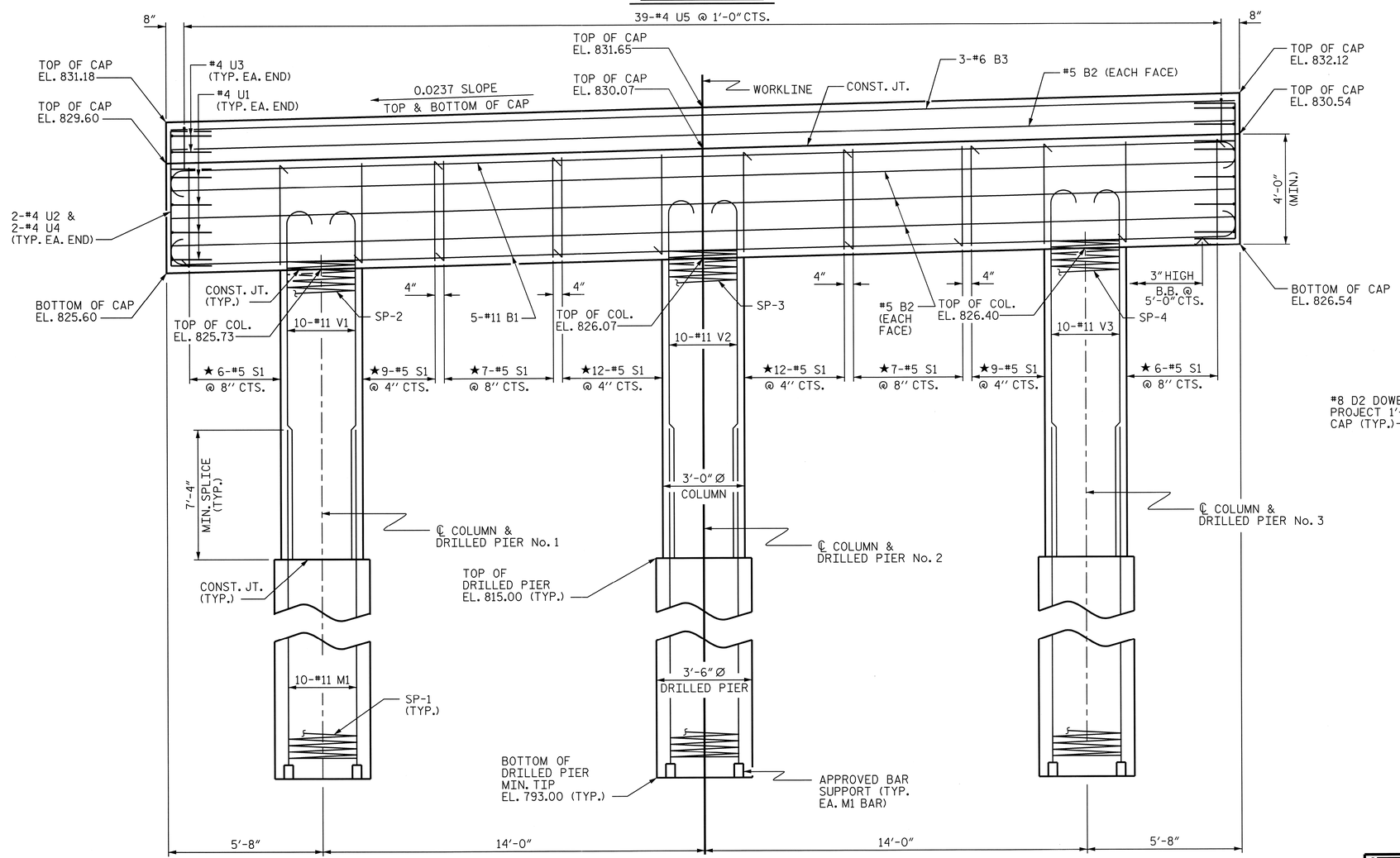

ELEVATION

DIMENSIONS & REINFORCING STEEL ARE TYPICAL FOR EACH COLUMN & DRILLED PIER UNLESS OTHERWISE NOTED.

NOTES

STIRRUPS AND "U" BARS IN CAP MAY BE SHIFTED AS NECESSARY TO CLEAR DOWELS.

HOOKS ON "V" BARS MAY BE TURNED AS NECESSARY FOR PLACING REINFORCING STEEL.

FOR DRILLED PIERS, SEE SPECIAL PROVISIONS.

ALL STEEL IN THE DRILLED PIERS IS INCLUDED IN THE PAY ITEMS FOR "REINFORCING STEEL" AND "SPIRAL COLUMN REINFORCING STEEL."

★ INVERT ALTERNATE STIRRUPS.

THE LOCATION OF THE CONSTRUCTION JOINT IN THE DRILLED PIERS IS BASED ON AN APPROXIMATE GROUND LINE ELEVATION. IF THE CONSTRUCTION JOINT IS ABOVE THE ACTUAL GROUND LINE ELEVATION, THE CONTRACTOR SHALL PLACE THE CONSTRUCTION JOINT ONE FOOT BELOW THE GROUND LINE.

THE CONTRACTOR'S ATTENTION IS CALLED TO THE FACT THAT THE LONGITUDINAL REINFORCEMENT FOR DRILLED PIERS IS DETAILED WITH 3 FEET OF EXTRA LENGTH.

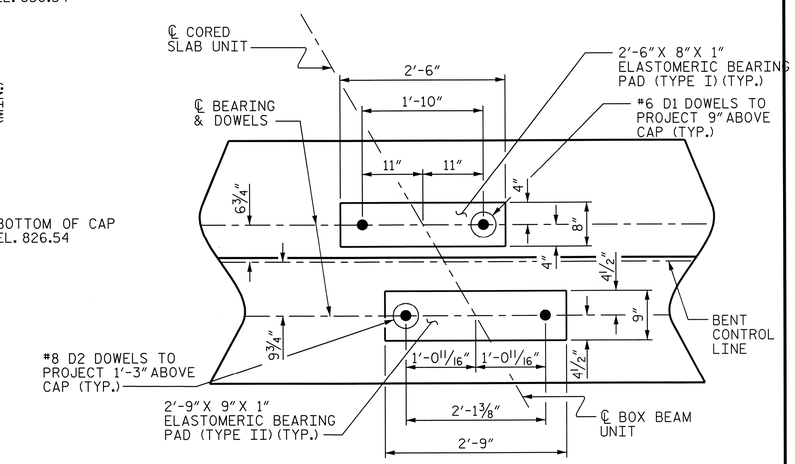

DETAIL "A"

(DIMENSIONS ARE TYPICAL EACH BEARING)

PROJECT NO. 17BP.9.R.29

STOKES COUNTY

STATION: 13+81.00 -L-

SHEET 1 OF 2

STATE OF NORTH CAROLINA
DEPARTMENT OF TRANSPORTATION
RALEIGH

SUBSTRUCTURE

BENT No. 1

NORTH CAROLINA PROFESSIONAL SEAL 24939 ENGINEER BYRON E. ATKINSON
02/04/14

MI ENGINEERING
1011 SCHAUB DRIVE, SUITE 100
RALEIGH, NC 27606
(919) 851-6606
FIRM PE NUMBER : P-0671

REVISIONS							SHEET NO.
NO.	BY:	DATE:	NO.	BY:	DATE:		S-17
1			3				TOTAL SHEETS
2			4				24

DRAWN BY : J.S. ISRAELNAIM DATE : 01/13
CHECKED BY : B.E. ATKINSON DATE : 01/13

2/4/2014
5:21:42 PM
User: blanning
Filename: P:\NC Projects\MI2002 - Div 09 Low Impact Bridge Replacement_RK&A\MI2002.04_Stokes 119 Cored Slab\17BP9R29\Structures\17BP9R29_SD_BT1.dgn

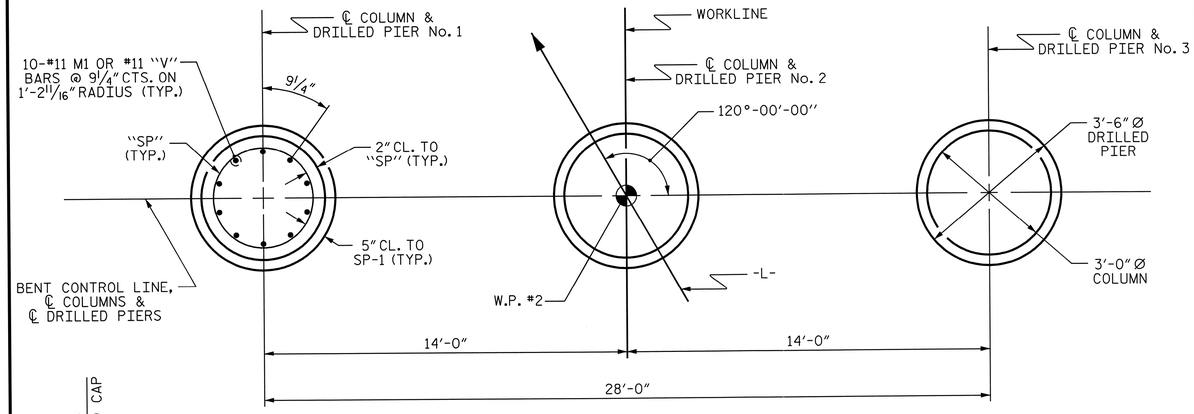

PLAN OF DRILLED PIERS & COLUMNS

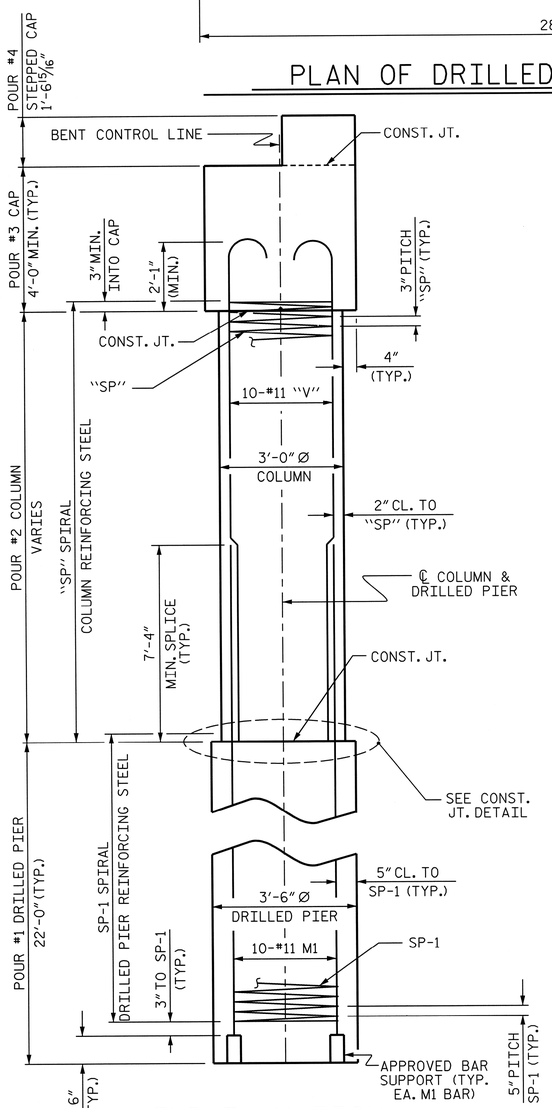

END ELEVATION

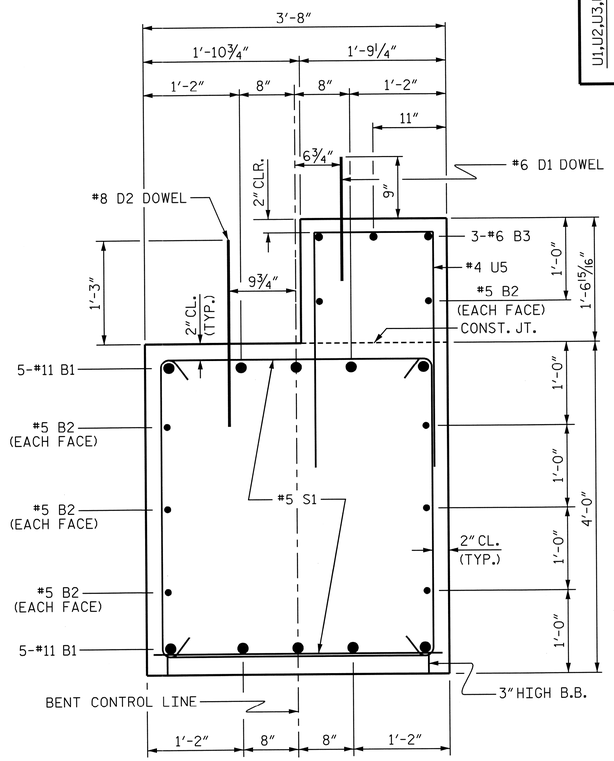

SECTION THRU CAP

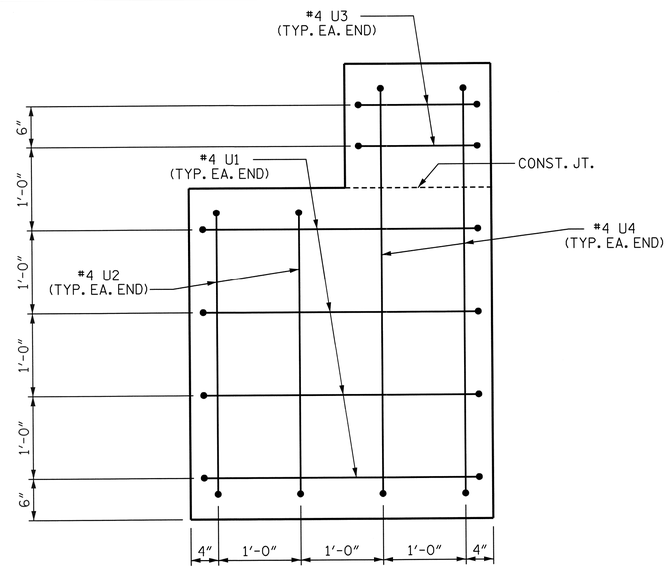

END OF CAP VIEW

(TYPICAL BOTH ENDS)

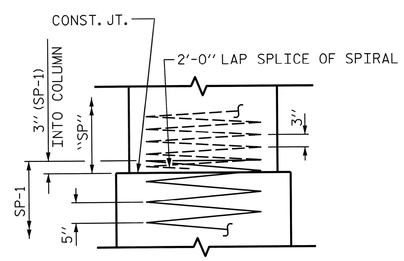

CONSTRUCTION JOINT DETAIL

BAR TYPES

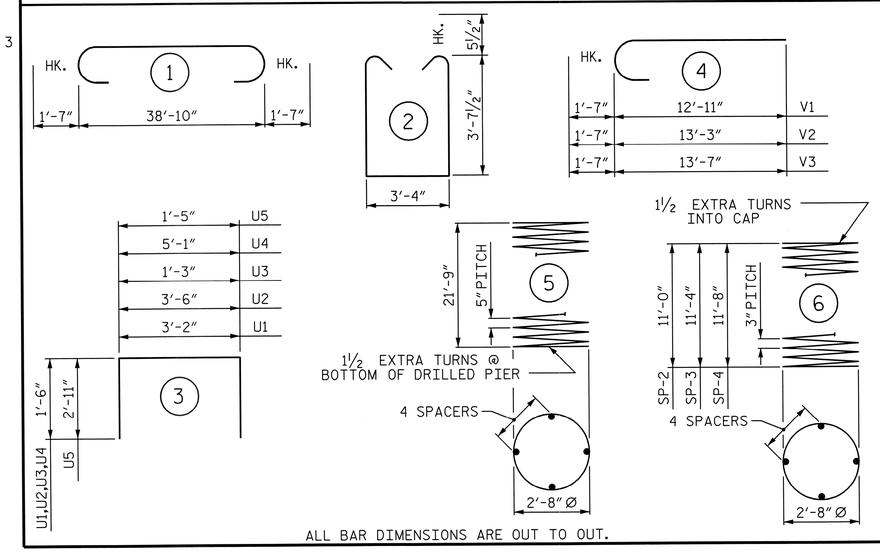

ALL BAR DIMENSIONS ARE OUT TO OUT.

BILL OF MATERIAL

BENT No. 1

BAR	NO.	SIZE	TYPE	LENGTH	WEIGHT
B1	10	#11	1	42'-0"	2231
B2	8	#5	STR	39'-0"	325
B3	3	#6	STR	39'-0"	176
D1	20	#6	STR	1'-6"	45
D2	20	#8	STR	2'-3"	120
M1	30	#11	STR	32'-1"	5114
S1	68	#5	2	11'-6"	816
U1	8	#4	3	6'-2"	33
U2	4	#4	3	6'-6"	17
U3	4	#4	3	4'-3"	11
U4	4	#4	3	8'-1"	22
U5	39	#4	3	7'-3"	189
V1	10	#11	4	14'-6"	770
V2	10	#11	4	14'-10"	788
V3	10	#11	4	15'-2"	806

REINFORCING STEEL (FOR ONE BENT) 11,463 LBS.

BAR	NO.	SIZE	TYPE	LENGTH	WEIGHT
SP-1	3	*	5	441'-8"	1382
SP-2	1	**	6	375'-5"	251
SP-3	1	**	6	386'-5"	258
SP-4	1	**	6	397'-5"	265

SPIRAL COLUMN REINFORCING STEEL (FOR ONE BENT) 2,156 LBS.

* THE SP-1 SPIRAL REINFORCING STEEL SHALL BE W31 OR D-31 COLD DRAWN WIRE OR #5 PLAIN OR DEFORMED BAR

** THE SP-2 THRU SP-4 SPIRAL REINFORCING STEEL SHALL BE W20 OR D-20 COLD DRAWN WIRE OR #4 PLAIN OR DEFORMED BAR

CLASS A CONCRETE BREAKDOWN

POUR #2 (COLUMNS)	8.7 C.Y.
POUR #3 (CAP)	21.4 C.Y.
POUR #4 (STEPPED CAP)	4.1 C.Y.
TOTAL CLASS A CONCRETE	34.2 C.Y.

DRILLED PIERS:

DRILLED PIER CONCRETE POUR #1 (DRILLED PIERS)	23.6 C.Y.
3'-6" Ø DRILLED PIER NOT IN SOIL	36.3 LIN. FT.
3'-6" Ø DRILLED PIER IN SOIL	29.7 LIN. FT.
PERMANENT STEEL CASING FOR 3'-6" Ø DRILLED PIER	27.0 LIN. FT.
CSL TUBES	282 LIN. FT.
CSL TESTING	1 EACH

PROJECT NO. 17BP.9.R.29

STOKES COUNTY

STATION: 13+81.00 -L-

SHEET 2 OF 2

STATE OF NORTH CAROLINA
DEPARTMENT OF TRANSPORTATION
RALEIGH

SUBSTRUCTURE

BENT No. 1

NORTH CAROLINA PROFESSIONAL SEAL 24939 ENGINEER BYRON E. ATKINSON
02/04/14

MI ENGINEERING
1011 SCHAUB DRIVE, SUITE 100
RALEIGH, NC 27606
(919) 851-6606
FIRM PE NUMBER : P-0671

REVISIONS							
NO.	BY:	DATE:	NO.	BY:	DATE:	SHEET NO.	S-18
1			3			TOTAL SHEETS	24
2			4				

DRAWN BY : J.S. ISRAELNAIM DATE : 01/13
CHECKED BY : B.E. ATKINSON DATE : 01/13

2/4/2014
5:22:02 PM
User: blanning
Filename: P:\NC Projects\MI2002 - Div 09 Low Impact Bridge Replacement_RK&A\MI2002.04_Stokes 119 Cored Slab\17BP9R29\Structures\17BP9R29_SD_BT2.dgn

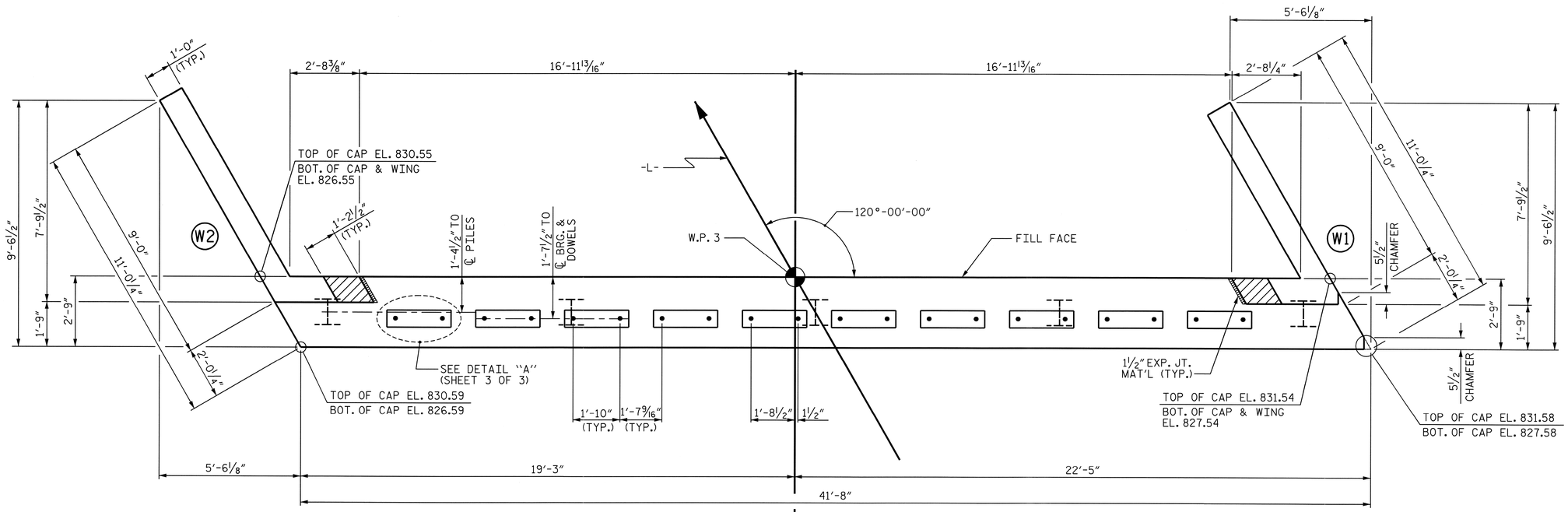

PLAN

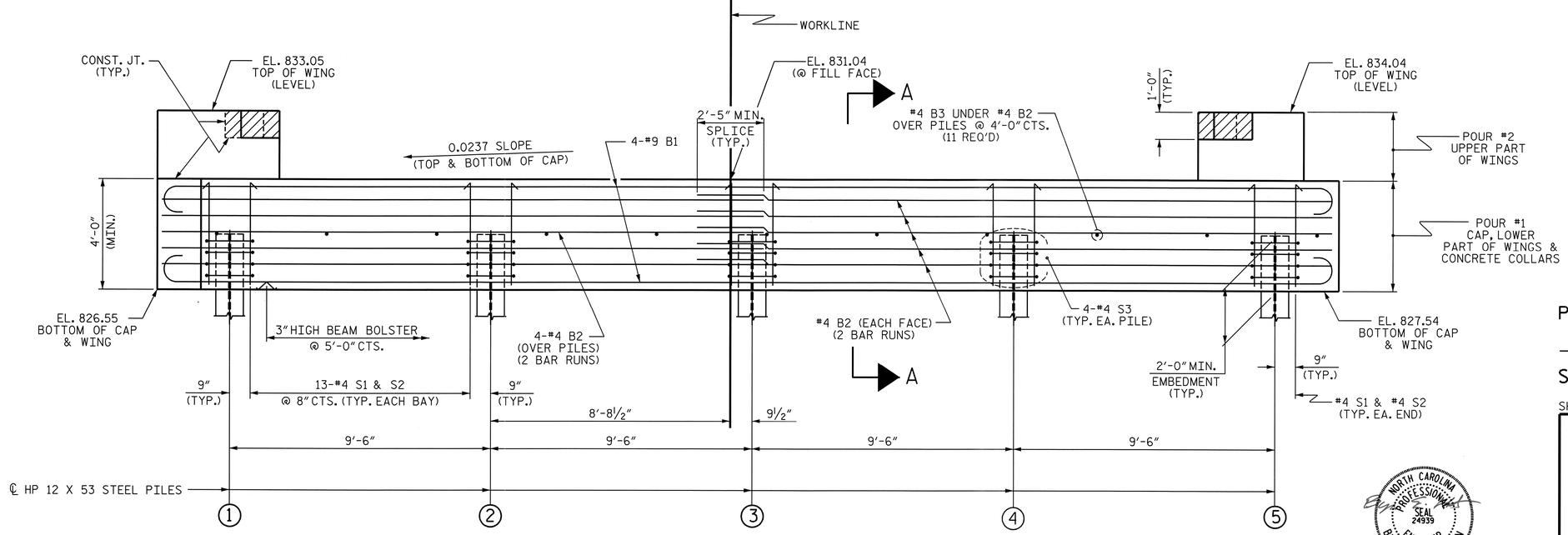

ELEVATION

WINGS NOT SHOWN FOR CLARITY.
FOR SECTION A-A, SEE SHEET 3 OF 3.
CONCRETE COLLARS FOR STEEL PILES NOT SHOWN IN PLAN AND ELEVATION VIEWS FOR CLARITY.
SEE "CORROSION PROTECTION FOR STEEL PILES DETAIL", SHEET 3 OF 3.

NOTES

STIRRUPS IN CAP MAY BE SHIFTED AS NECESSARY TO CLEAR DOWELS.

THE CONCRETE IN THE SHADED AREA OF THE WING SHALL BE POURED AFTER THE VERTICAL CONCRETE BARRIER RAIL IS CAST IF SLIP FORMING IS USED.

FOR PILE SPLICE DETAILS, SEE SHEET 3 OF 3.

FOR WING DETAILS, SEE SHEET 2 OF 3.

INSTALL THE 4" DIA. DRAIN PIPE THROUGH THE WING WALL AS REQUIRED FOR REINFORCED BRIDGE APPROACH FILLS, SEE THE ROADWAY PLANS. REINFORCING STEEL IN THE WING WALL MAY BE SHIFTED AS NECESSARY TO CLEAR THE DRAIN PIPE.

TOP OF PILE ELEVATIONS

1	828.61
2	828.84
3	829.06
4	829.29
5	829.51

PROJECT NO. 17BP.9.R.29
STOKES COUNTY
STATION: 13+81.00 -L-

SHEET 1 OF 3

STATE OF NORTH CAROLINA
DEPARTMENT OF TRANSPORTATION
RALEIGH

SUBSTRUCTURE

END BENT No. 2

NORTH CAROLINA PROFESSIONAL SEAL 24939 ENGINEER BYRON E. ATKINSON
02/04/14

MI ENGINEERING
1011 SCHAUB DRIVE, SUITE 100
RALEIGH, NC 27606
(919) 851-6606
FIRM PE NUMBER : P-0671

REVISIONS						SHEET NO.
NO.	BY:	DATE:	NO.	BY:	DATE:	S-19
1			3			TOTAL SHEETS
2			4			24

ASSEMBLED BY : B.E. LANNING DATE : 01/13
CHECKED BY : B.E. ATKINSON DATE : 01/13
DRAWN BY : WJH 12/11
CHECKED BY : AAC 12/11

STD. NO. EB_30_120S4

2/4/2014
5:22:25 PM
User: blanning
Filename: P:\NC Projects\MI2002 - Div 09 Low Impact Bridge Replacement_RK&A\MI2002.04_Stokes 119 Cored Slab\17BP9R29\Structures\17BP9R29_SD_EB12A.dgn

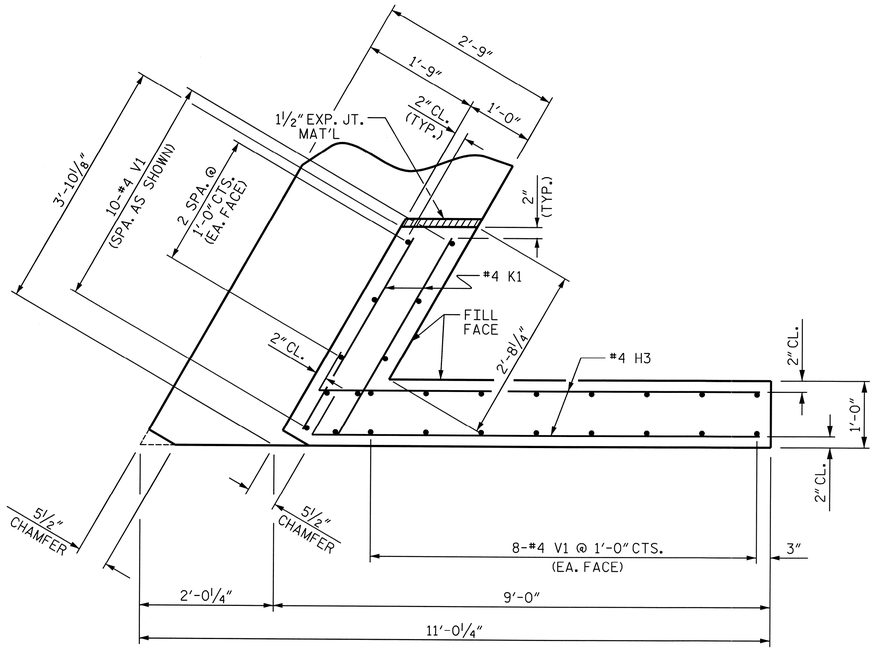

PLAN OF WING (W1)

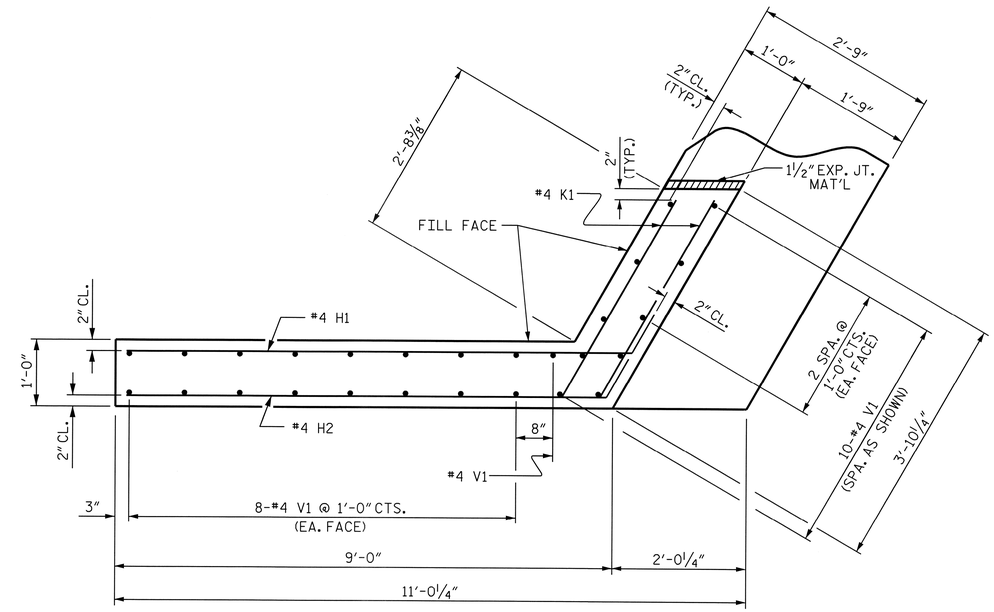

PLAN OF WING (W2)

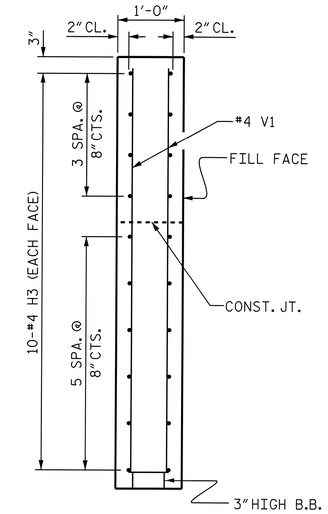

SECTION X-X

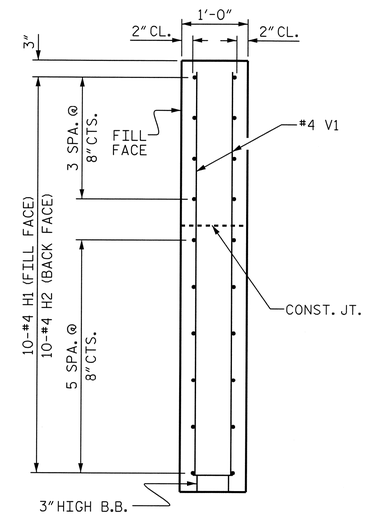

SECTION Y-Y

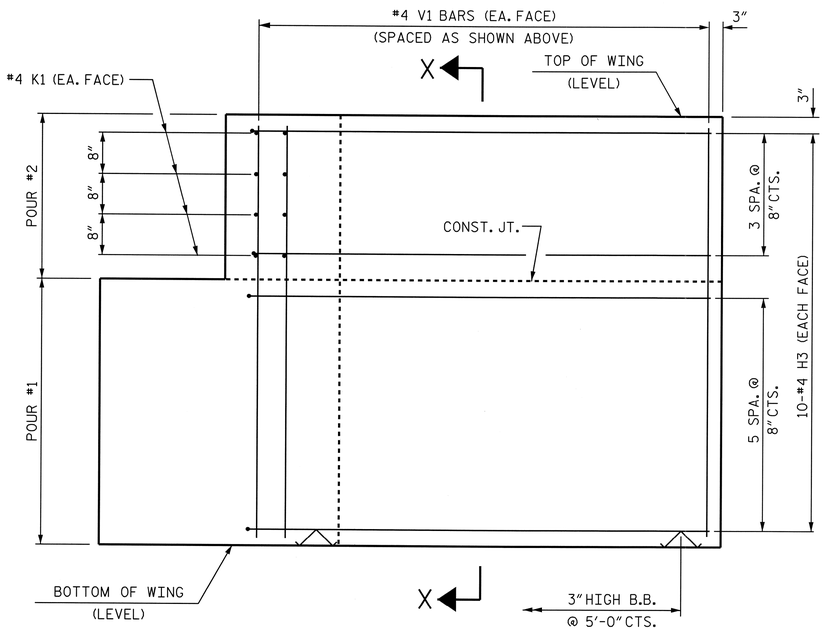

ELEVATION OF WING (W1)

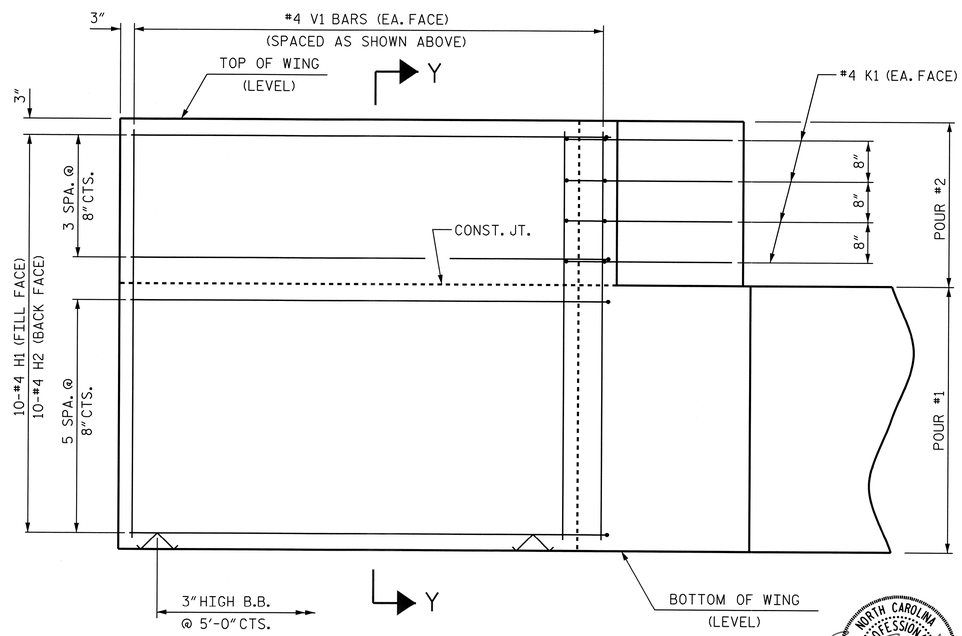

ELEVATION OF WING (W2)

WING DETAILS

NORTH CAROLINA PROFESSIONAL SEAL 24939 ENGINEER BYRON E. ATKINSON
02/04/14

PROJECT NO. 17BP.9.R.29
STOKES COUNTY
STATION: 13+81.00 -L-

SHEET 2 OF 3

STATE OF NORTH CAROLINA
DEPARTMENT OF TRANSPORTATION
RALEIGH

SUBSTRUCTURE
END BENT No. 2
WING DETAILS

ASSEMBLED BY : B.E. LANNING	DATE : 01/13
CHECKED BY : B.E. ATKINSON	DATE : 01/13
DRAWN BY : WJH 12/11	
CHECKED BY : AAC 12/11	

MI ENGINEERING
1011 SCHAUB DRIVE, SUITE 100
RALEIGH, NC 27606
(919) 851-6606
FIRM PE NUMBER : P-0671

REVISIONS						SHEET NO.
NO.	BY:	DATE:	NO.	BY:	DATE:	S-20
1			3			TOTAL SHEETS
2			4			24

STD. NO. EB_30_120S4

2/4/2014
5:22:42 PM
User: blanning
Filename: P:\NC Projects\MI2002 - Div 09 Low Impact Bridge Replacement.RK&A\MI2002.04_Stokes 119 Cored Slab\17BP9R29\Structures\17BP9R29_SD_EB128.dgn

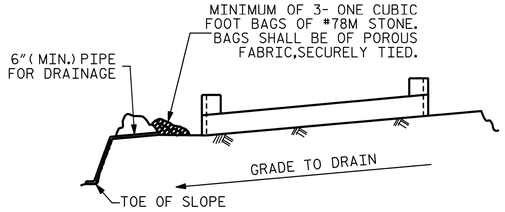

BAGGED STONE AND PIPE SHALL BE PLACED IMMEDIATELY AFTER COMPLETION OF END BENT EXCAVATION. PIPE MAY BE EITHER CONCRETE, CORRUGATED STEEL, CORRUGATED ALUMINUM ALLOY, OR CORRUGATED PLASTIC. PERFORATED PIPE WILL NOT BE ALLOWED.

BAGGED STONE SHALL REMAIN IN PLACE UNTIL THE ENGINEER DIRECTS THAT IT BE REMOVED. THE CONTRACTOR SHALL REMOVE AND DISPOSE OF SILT ACCUMULATIONS AT BAGGED STONE WHEN SO DIRECTED BY THE ENGINEER. BAGS SHALL BE REMOVED AND REPLACED WHENEVER THE ENGINEER DETERMINES THAT THEY HAVE DETERIORATED AND LOST THEIR EFFECTIVENESS.

NO SEPARATE PAYMENT WILL BE MADE FOR THIS WORK AND THE ENTIRE COST OF THIS WORK SHALL BE INCLUDED IN THE UNIT CONTRACT PRICE BID FOR THE SEVERAL PAY ITEMS.

TEMPORARY DRAINAGE AT END BENT

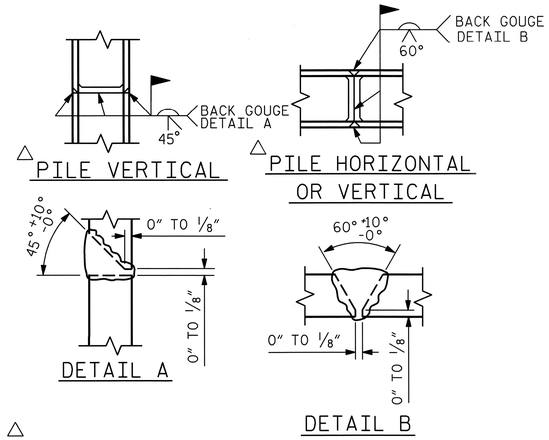

△ POSITION OF PILE DURING WELDING.

PILE SPLICE DETAILS

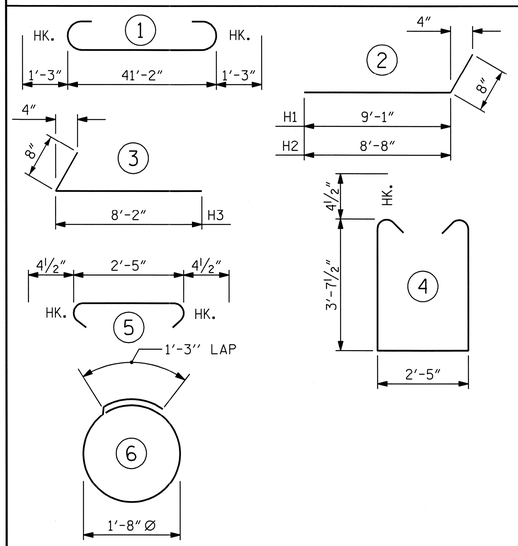

ALL BAR DIMENSIONS ARE OUT TO OUT.

END BENT No. 2
HP 12 X 53 STEEL PILES
NO: 5 LIN. FT.= 100

BILL OF MATERIAL
END BENT No. 2

BAR	NO.	SIZE	TYPE	LENGTH	WEIGHT
B1	8	#9	1	43'-8"	1188
B2	28	#4	STR	21'-11"	410
B3	11	#4	STR	2'-5"	18
D1	20	#6	STR	1'-6"	45
H1	10	#4	2	9'-9"	65
H2	10	#4	2	9'-4"	62
H3	20	#4	3	8'-10"	118
K1	16	#4	STR	3'-3"	35
S1	54	#4	4	10'-5"	376
S2	54	#4	5	3'-2"	114
S3	20	#4	6	6'-6"	87
V1	53	#4	STR	6'-2"	218

REINFORCING STEEL (FOR ONE END BENT) 2736 LBS.

CLASS A CONCRETE BREAKDOWN (FOR ONE END BENT)

POUR #1 CAP, LOWER PART OF WINGS & COLLARS 20.2 C.Y.

POUR #2 UPPER PART OF WINGS 2.2 C.Y.

TOTAL CLASS A CONCRETE 22.4 C.Y.

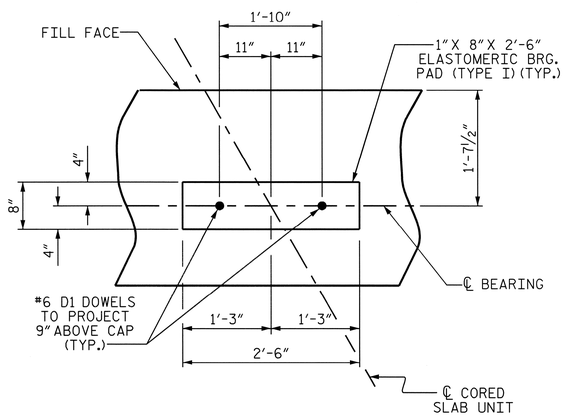

DETAIL "A"

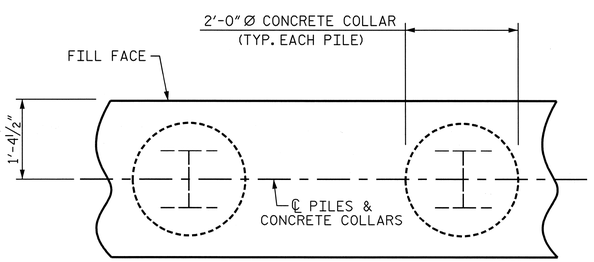

PLAN

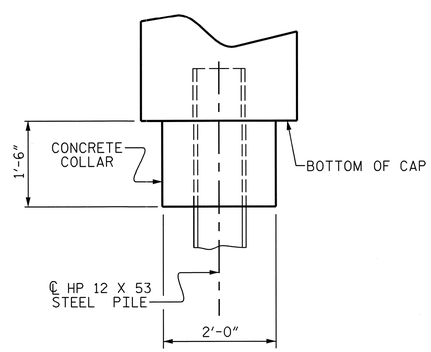

ELEVATION

CORROSION PROTECTION FOR STEEL PILES DETAIL

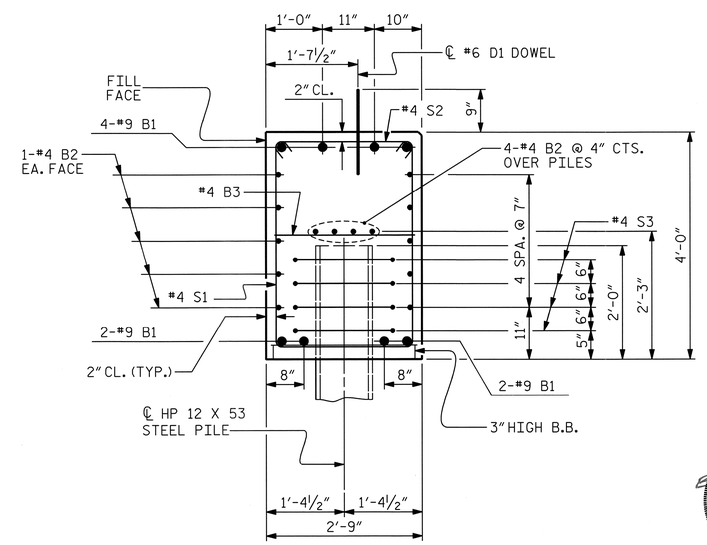

SECTION A-A

(CONCRETE COLLAR NOT SHOWN FOR CLARITY. SEE "CORROSION PROTECTION FOR STEEL PILES DETAIL.")

NORTH CAROLINA PROFESSIONAL SEAL 24939 ENGINEER BYRON E. ATKINSON
02/04/14

PROJECT NO. 17BP.9.R.29
STOKES COUNTY
STATION: 13+81.00 -L-

SHEET 3 OF 3

STATE OF NORTH CAROLINA
DEPARTMENT OF TRANSPORTATION
RALEIGH

SUBSTRUCTURE

END BENT No. 2
DETAILS

MI ENGINEERING
1011 SCHAUB DRIVE, SUITE 100
RALEIGH, NC 27606
(919) 851-6606
FIRM PE NUMBER : P-0671

REVISIONS								SHEET NO.
NO.	BY:	DATE:	NO.	BY:	DATE:			S-21
1			3					TOTAL SHEETS
2			4					24

ASSEMBLED BY : B.E. LANNING	DATE : 01/13	
CHECKED BY : B.E. ATKINSON	DATE : 01/13	
DRAWN BY : WJH 12/11		
CHECKED BY : AAC 12/11		

STD. NO. EB_30_120S4

2/4/2014
5:22:59 PM
User: blanning
Filename: P:\NC Projects\MI2002 - Div 09 Low Impact Bridge Replacement_RK&A\MI2002.04_Stokes 119 Cored Slab\17BP9R29\Structures\17BP9R29_SD_EBT2C.dgn

NOTES :

FOR BERM WIDTH DIMENSIONS, SEE GENERAL DRAWING.

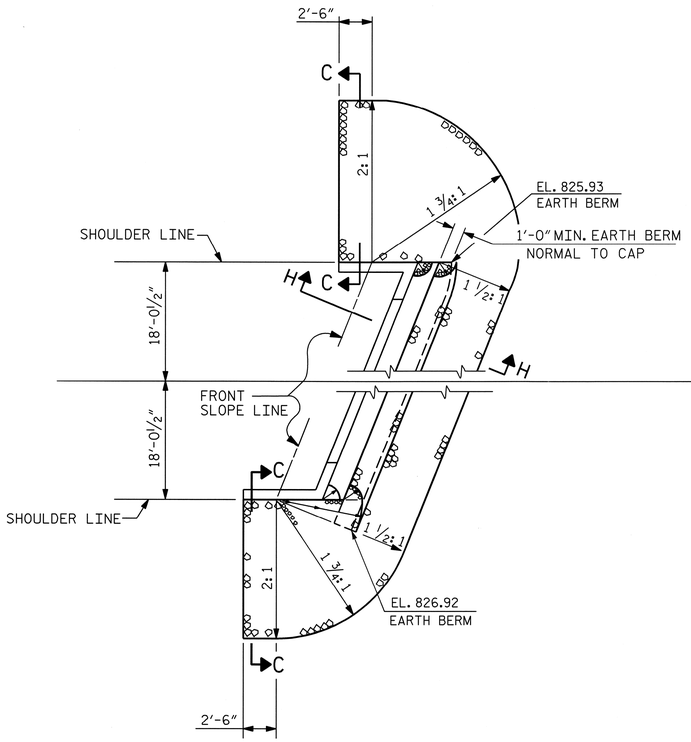

END BENT No. 1

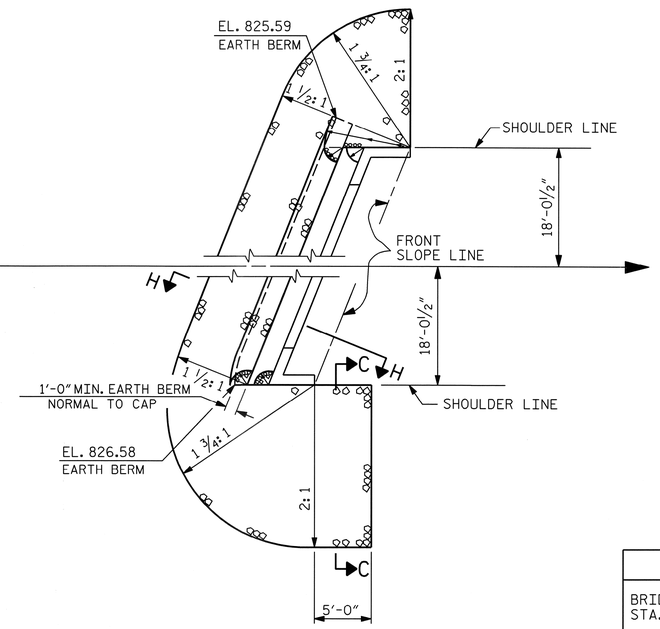

END BENT No. 2

ESTIMATED QUANTITIES		
BRIDGE @ STA. 13+81.00 -L-	RIP RAP CLASS II (2'-0" THICK)	GEOTEXTILE FOR DRAINAGE
	TONS	SQUARE YARDS
END BENT 1	273	303
END BENT 2	231	257

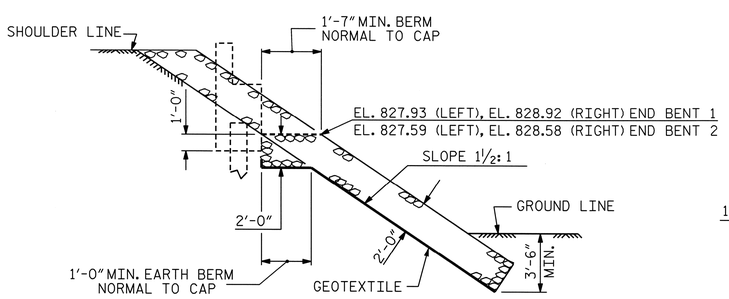

SECTION H-H

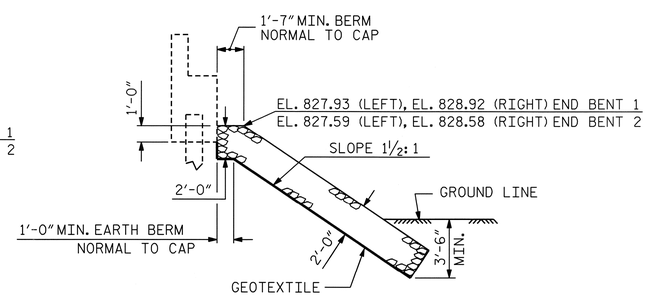

℄ SECTION

BERM RIP RAPPED

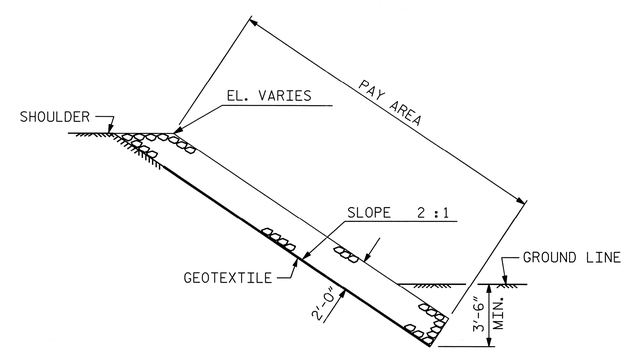

SECTION C-C

PROJECT NO. 17BP.9.R.29

STOKES COUNTY

STATION: 13+81.00 -L-

STATE OF NORTH CAROLINA
DEPARTMENT OF TRANSPORTATION
RALEIGH

STANDARD

RIP RAP DETAILS

NORTH CAROLINA PROFESSIONAL SEAL 24939 ENGINEER BYRON E. ATKINSON
02/04/14

ASSEMBLED BY : J.S. ISRAELNAIM DATE : 01/13
CHECKED BY : B.E. ATKINSON DATE : 01/13

DRAWN BY : REK 1/84
CHECKED BY : RDU 1/84

REV. 5/1/06R TLA/GM
REV. 10/1/11 MAA/GM
REV. 12/21/11 MAA/GM

MI ENGINEERING
1011 SCHAUB DRIVE, SUITE 100
RALEIGH, NC 27606
(919) 851-6606
FIRM PE NUMBER : P-0671

REVISIONS								
NO.	BY:	DATE:	NO.	BY:	DATE:			
1			3					
2			4					

SHEET NO. S-22

TOTAL SHEETS 24

STD. NO. RR1

2/4/2014
5:23:21 PM
User: blanning
Filename: P:\NC Projects\MI2002 - Div 09 Low Impact Bridge Replacement_RK&A\MI2002.04.Stokes 119 Cored Slab\17BP9R29\Structures\17BP9R29_SD_RR1.dgn

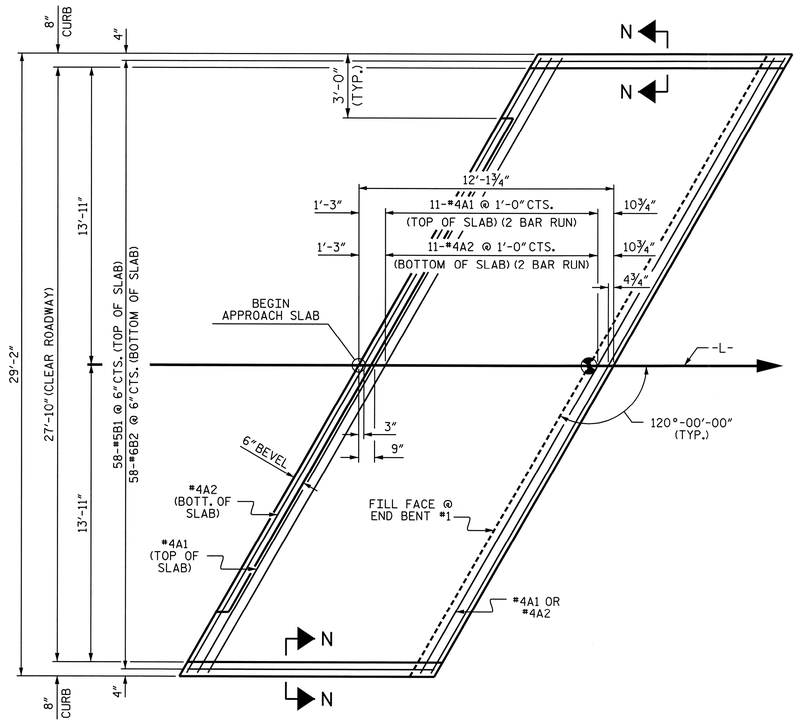

PLAN @ END BENT #1

NOTES

FOR REINFORCED BRIDGE APPROACH FILL INCLUDING GEOTEXTILE, IMPERMEABLE GEOMEMBRANE, 4" Ø DRAINAGE PIPE, #78M STONE, AND SELECT MATERIAL, SEE ROADWAY PLANS.

AREA BETWEEN THE WINGWALL AND APPROACH SLAB SHALL BE GRADED TO DRAIN THE WATER AWAY FROM THE FILL FACE OF THE BRIDGE AND SHALL BE PAVED. SEE ROADWAY PLANS.

APPROACH SLAB GROOVING IS NOT REQUIRED.

BILL OF MATERIAL

APPROACH SLAB AT EB #1

BAR	NO.	SIZE	TYPE	LENGTH	WEIGHT
* A1	26	#4	STR	17'-8"	307
A2	26	#4	STR	17'-7"	305
* B1	58	#5	STR	11'-1"	670
B2	58	#6	STR	11'-7"	1009
REINFORCING STEEL				LBS.	1314
* EPOXY COATED REINFORCING STEEL				LBS.	977
CLASS AA CONCRETE				C.Y.	15.6

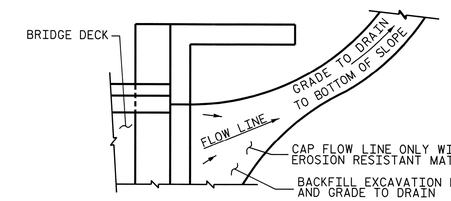

NOTE: IF THE APPROACH SLAB IS NOT CONSTRUCTED IMMEDIATELY AFTER THE BACKFILLING OF THE END BENT EXCAVATION, GRADE TO DRAIN TO THE BOTTOM OF THE SLOPE AND PROVIDE EROSION RESISTANT MATERIAL, SUCH AS FIBERGLASS ROVING OR AS DIRECTED BY THE ENGINEER TO PREVENT SOIL EROSION AND TO PROTECT THE AREA ADJACENT TO THE STRUCTURE. THE CONTRACTOR WILL BE REQUIRED TO REMOVE THESE MATERIALS PRIOR TO CONSTRUCTION OF THE APPROACH SLAB.

TEMPORARY DRAINAGE DETAIL

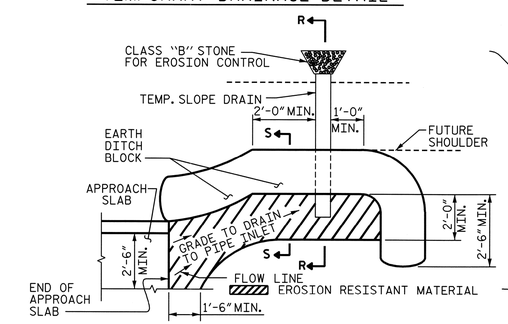

NOTE: IMMEDIATELY AFTER THE CONSTRUCTION OF THE APPROACH SLAB, THE CONTRACTOR SHALL PROVIDE TEMPORARY BERM AND SLOPE DRAIN. CONTRACTOR SHALL GRADE TO PIPE INLET AND PROVIDE EROSION RESISTANT MATERIAL AS SHOWN. THE EROSION RESISTANT MATERIAL SHALL BE EITHER 1) ASPHALT PLANT MIX, TYPE 1 OR TYPE 2, MIN. 2" DEPTH, 2) EROSION CONTROL MAT, OR 3) CONCRETE, AS DIRECTED BY THE ENGINEER. THE SLOPE DRAIN SHALL CONSIST OF A NON-PERFORATED TEMPORARY DRAINAGE PIPE, 12 INCHES IN DIAMETER.

PLAN VIEW

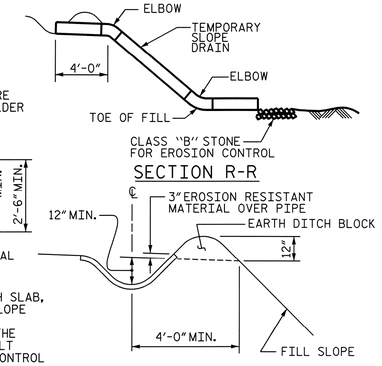

SECTION S-S

TEMPORARY BERM AND SLOPE DRAIN DETAILS

(TO BE USED WHEN SHOULDER BERM GUTTER IS REQUIRED)

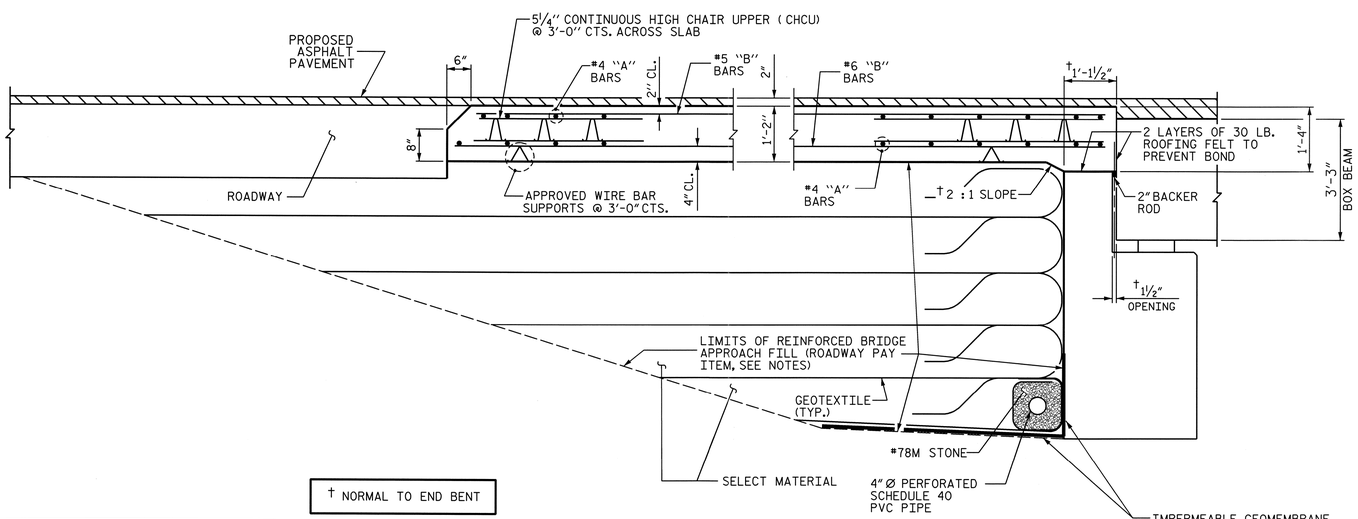

† NORMAL TO END BENT

SECTION THRU SLAB

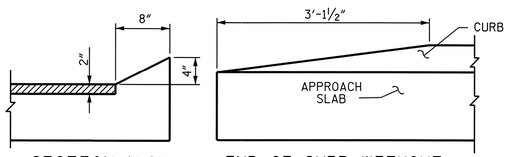

SECTION N-N

END OF CURB WITHOUT SHOULDER BERM GUTTER

CURB DETAILS

SPLICE LENGTHS		
BAR SIZE	EPOXY COATED	UNCOATED
#4	2'-0"	1'-9"
#5	2'-6"	2'-2"
#6	3'-10"	2'-7"

PROJECT NO. 17BP.9.R.29

STOKES COUNTY

STATION: 13+81.00 -L-

STATE OF NORTH CAROLINA
DEPARTMENT OF TRANSPORTATION
RALEIGH

STANDARD
BRIDGE APPROACH SLAB
FOR PRESTRESSED CONCRETE
BOX BEAM UNIT
(SUB-REGIONAL TIER)
120° SKEW

NORTH CAROLINA PROFESSIONAL SEAL 24939 ENGINEER BYRON E. ATKINSON
02/04/14

MI ENGINEERING
1011 SCHAUB DRIVE, SUITE 100
RALEIGH, NC 27606
(919) 851-6606
FIRM PE NUMBER : P-0671

REVISIONS						
NO.	BY:	DATE:	NO.	BY:	DATE:	
1			3			
2			4			

SHEET NO. S-23
TOTAL SHEETS 24

ASSEMBLED BY : B.E. LANNING DATE : 01/13
CHECKED BY : B.E. ATKINSON DATE : 01/13
DRAWN BY : MAA 11/11
CHECKED BY : AAC 11/11

STD. NO. BAS_BB_30_120S

2/4/2014
5:33:04 PM
User: blanning
Filename: P:\NC Projects\MI2002 - Div 09 Low Impact Bridge Replacement_RK&A\MI2002.04_Stokes 119 Cored Slab\17BP9R29\Structures\17BP9R29_SD_BAS1.dgn

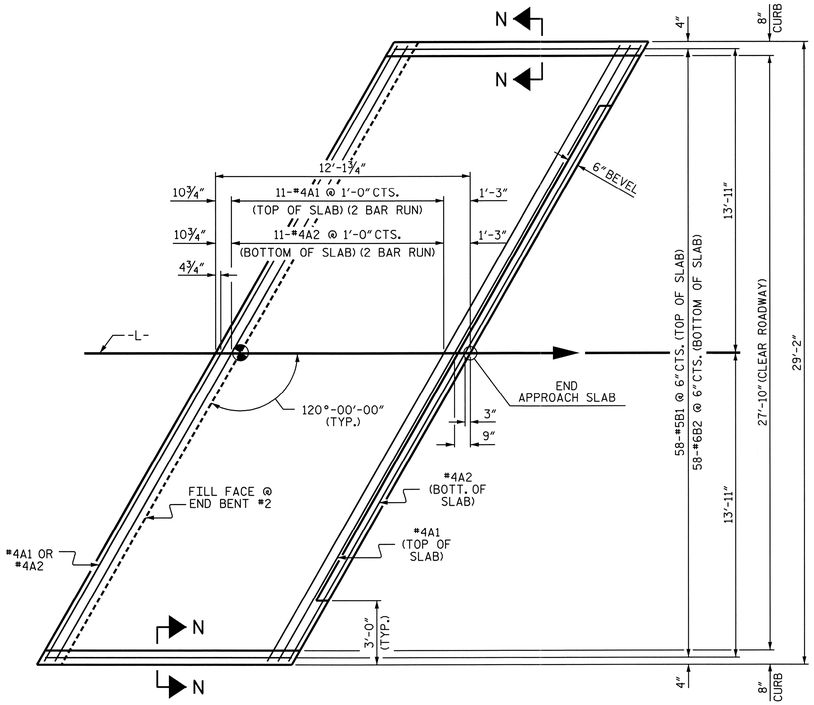

PLAN @ END BENT #2

NOTES

FOR REINFORCED BRIDGE APPROACH FILL INCLUDING GEOTEXTILE, IMPERMEABLE GEOMEMBRANE, 4" Ø DRAINAGE PIPE, #78M STONE, AND SELECT MATERIAL, SEE ROADWAY PLANS.

AREA BETWEEN THE WINGWALL AND APPROACH SLAB SHALL BE GRADED TO DRAIN THE WATER AWAY FROM THE FILL FACE OF THE BRIDGE AND SHALL BE PAVED. SEE ROADWAY PLANS.

APPROACH SLAB GROOVING IS NOT REQUIRED.

BILL OF MATERIAL

APPROACH SLAB AT EB #2

BAR	NO.	SIZE	TYPE	LENGTH	WEIGHT
* A1	26	#4	STR	17'-8"	307
A2	26	#4	STR	17'-7"	305
* B1	58	#5	STR	11'-1"	670
B2	58	#6	STR	11'-7"	1009
REINFORCING STEEL				LBS.	1314
* EPOXY COATED REINFORCING STEEL				LBS.	977
CLASS AA CONCRETE				C.Y.	15.6

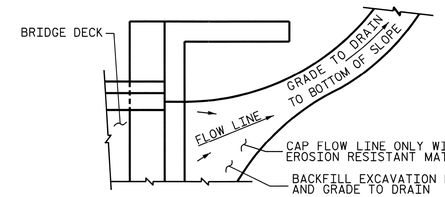

NOTE: IF THE APPROACH SLAB IS NOT CONSTRUCTED IMMEDIATELY AFTER THE BACKFILLING OF THE END BENT EXCAVATION, GRADE TO DRAIN TO THE BOTTOM OF THE SLOPE AND PROVIDE EROSION RESISTANT MATERIAL, SUCH AS FIBERGLASS ROVING OR AS DIRECTED BY THE ENGINEER TO PREVENT SOIL EROSION AND TO PROTECT THE AREA ADJACENT TO THE STRUCTURE. THE CONTRACTOR WILL BE REQUIRED TO REMOVE THESE MATERIALS PRIOR TO CONSTRUCTION OF THE APPROACH SLAB.

TEMPORARY DRAINAGE DETAIL

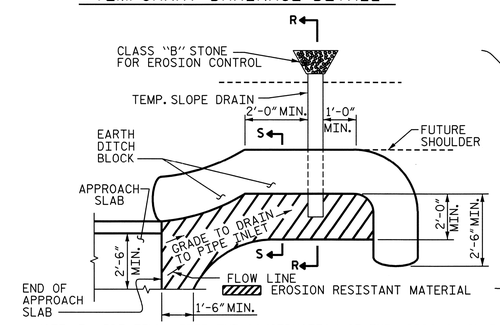

PLAN VIEW

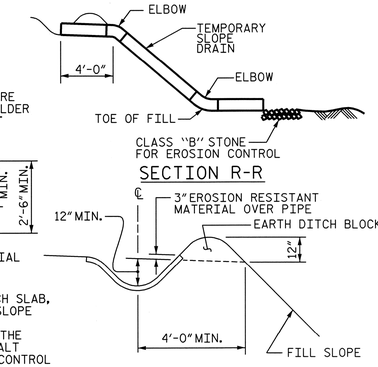

SECTION S-S

NOTE: IMMEDIATELY AFTER THE CONSTRUCTION OF THE APPROACH SLAB, THE CONTRACTOR SHALL PROVIDE TEMPORARY BERM AND SLOPE DRAIN. CONTRACTOR SHALL GRADE TO PIPE INLET AND PROVIDE EROSION RESISTANT MATERIAL AS SHOWN. THE EROSION RESISTANT MATERIAL SHALL BE EITHER 1) ASPHALT PLANT MIX, TYPE 1 OR TYPE 2, MIN. 2" DEPTH, 2) EROSION CONTROL MAT, OR 3) CONCRETE, AS DIRECTED BY THE ENGINEER. THE SLOPE DRAIN SHALL CONSIST OF A NON-PERFORATED TEMPORARY DRAINAGE PIPE, 12 INCHES IN DIAMETER.

TEMPORARY BERM AND SLOPE DRAIN DETAILS

(TO BE USED WHEN SHOULDER BERM GUTTER IS REQUIRED)

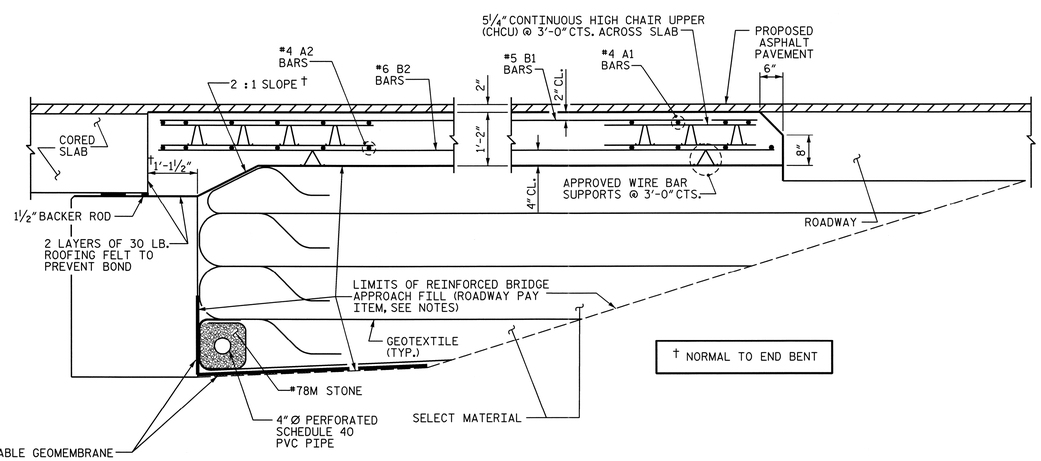

† NORMAL TO END BENT

SECTION THRU SLAB

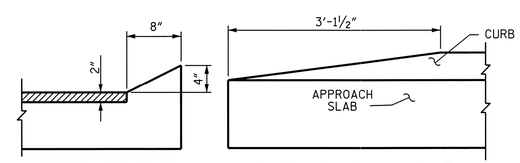

SECTION N-N

END OF CURB WITHOUT SHOULDER BERM GUTTER

CURB DETAILS

SPLICE LENGTHS		
BAR SIZE	EPOXY COATED	UNCOATED
#4	2'-0"	1'-9"
#5	2'-6"	2'-2"
#6	3'-10"	2'-7"

PROJECT NO. 17BP.9.R.29

STOKES COUNTY

STATION: 13+81.00 -L-

STATE OF NORTH CAROLINA
DEPARTMENT OF TRANSPORTATION
RALEIGH

STANDARD
BRIDGE APPROACH SLAB
FOR PRESTRESSED CONCRETE
CORED SLAB UNIT
(SUB-REGIONAL TIER)
120° SKEW

NORTH CAROLINA PROFESSIONAL SEAL 24939 ENGINEER BYRON E. ATKINSON
02/04/14

MI ENGINEERING
1011 SCHAUB DRIVE, SUITE 100
RALEIGH, NC 27606
(919) 851-6606
FIRM PE NUMBER : P-0671

REVISIONS						SHEET NO.
NO.	BY:	DATE:	NO.	BY:	DATE:	S-24
1			3			TOTAL SHEETS
2			4			24

STD. NO. BAS_30_120S

ASSEMBLED BY : B.E. LANNING	DATE : 01/13
CHECKED BY : B.E. ATKINSON	DATE : 01/13
DRAWN BY : SHS/MAA 5-09	REV. 12-11 MAA/AAC
CHECKED BY : BCH 5-09	

2/4/2014
5:33:25 PM
User: blanning
Filename: P:\NC Projects\MI2002 - Div 09 Low Impact Bridge Replacement_RK&A\MI2002.04_Stokes 119 Cored Slab\17BP9R29\Structures\17BP9R29_SD_BAS2.dgn

STANDARD NOTES

DESIGN DATA:

SPECIFICATIONS	A.A.S.H.T.O. (CURRENT)
LIVE LOAD	SEE PLANS
IMPACT ALLOWANCE	SEE A.A.S.H.T.O.
STRESS IN EXTREME FIBER OF	
STRUCTURAL STEEL - AASHTO M270 GRADE 36	20,000 LBS. PER SQ. IN.
- AASHTO M270 GRADE 50W	27,000 LBS. PER SQ. IN.
- AASHTO M270 GRADE 50	27,000 LBS. PER SQ. IN.
REINFORCING STEEL IN TENSION	
GRADE 60	24,000 LBS. PER SQ. IN.
CONCRETE IN COMPRESSION	1,200 LBS. PER SQ. IN.
CONCRETE IN SHEAR	SEE A.A.S.H.T.O.
STRUCTURAL TIMBER - TREATED OR	
UNTREATED - EXTREME FIBER STRESS	1,800 LBS. PER SQ. IN.
COMPRESSION PERPENDICULAR TO GRAIN OF TIMBER	375 LBS. PER SQ. IN.
EQUIVALENT FLUID PRESSURE OF EARTH	30 LBS. PER CU. FT. (MINIMUM)

MATERIAL AND WORKMANSHIP:

EXCEPT AS MAY OTHERWISE BE SPECIFIED ON PLANS OR IN THE SPECIAL PROVISIONS, ALL MATERIAL AND WORKMANSHIP SHALL BE IN ACCORDANCE WITH THE 2012 "STANDARD SPECIFICATIONS FOR ROADS AND STRUCTURES" OF THE N. C. DEPARTMENT OF TRANSPORTATION.

STEEL SHEET PILING FOR PERMANENT OR TEMPORARY APPLICATIONS SHALL BE HOT ROLLED.

CONCRETE:

UNLESS OTHERWISE REQUIRED ON PLANS, CLASS A CONCRETE SHALL BE USED FOR ALL PORTIONS OF ALL STRUCTURES WITH THE EXCEPTION THAT: CLASS AA CONCRETE SHALL BE USED IN BRIDGE SUPERSTRUCTURES, ABUTMENT BACKWALLS, AND APPROACH SLABS; AND CLASS B CONCRETE SHALL BE USED FOR SLOPE PROTECTION AND RIP RAP.

CONCRETE CHAMFERS:

UNLESS OTHERWISE NOTED ON THE PLANS, ALL EXPOSED CORNERS ON STRUCTURES SHALL BE CHAMFERED 3/4" WITH THE FOLLOWING EXCEPTIONS: TOP CORNERS OF CURBS MAY BE ROUNDED TO 1-1/2" RADIUS WHICH IS BUILT INTO CURB FORMS; CORNERS OF TRANSVERSE FLOOR EXPANSION JOINTS SHALL BE ROUNDED WITH A 1/4" FINISHING TOOL UNLESS OTHERWISE REQUIRED ON PLANS; AND CORNERS OF EXPANSION JOINTS IN THE ROADWAY FACES AND TOPS OF CURBS AND SIDEWALKS SHALL BE ROUNDED TO A 1/4" RADIUS WITH A FINISHING STONE OR TOOL UNLESS OTHERWISE REQUIRED ON PLANS.

DOWELS:

DOWELS WHEN INDICATED ON PLANS AS FOR CULVERT EXTENSIONS, SHALL BE EMBEDDED AT LEAST 12" INTO THE OLD CONCRETE AND GROUTED INTO PLACE WITH 1:2 CEMENT MORTAR.

ALLOWANCE FOR DEAD LOAD DEFLECTION, SETTLEMENT, ETC. IN CASTING SUPERSTRUCTURES:

BRIDGES SHALL BE BUILT ON THE GRADE OR VERTICAL CURVE SHOWN ON PLANS. SLABS, CURBS AND PARAPETS SHALL CONFORM TO THE GRADE OR CURVE.

ALL DIMENSIONS WHICH ARE GIVEN IN SECTION AND ARE AFFECTED BY DEAD LOAD DEFLECTIONS ARE DIMENSIONS AT CENTER LINE OF BEARING UNLESS OTHERWISE NOTED ON PLANS. IN SETTING FORMS FOR STEEL BEAM BRIDGES AND PRESTRESSED CONCRETE GIRDER BRIDGES, ADJUSTMENTS SHALL BE MADE DUE TO THE DEAD LOAD DEFLECTIONS FOR THE ELEVATIONS SHOWN. WHERE BLOCKS ARE SHOWN OVER BEAMS FOR BUILDING UP TO THE SLAB, THE VERTICAL DIMENSIONS OF THE BLOCKS SHALL BE ADJUSTED BETWEEN BEARINGS TO COMPENSATE FOR DEAD LOAD DEFLECTIONS, VERTICAL CURVE ORDINATE, AND ACTUAL BEAM CAMBER. WHERE BOTTOM OF SLAB IS IN LINE WITH BOTTOM OF TOP FLANGES, DEPTH OF SLAB BETWEEN BEARINGS SHALL BE ADJUSTED TO COMPENSATE FOR DEAD LOAD DEFLECTION, VERTICAL CURVE ORDINATE, AND ACTUAL BEAM CAMBER.

IN SETTING FALSEWORK AND FORMS FOR REINFORCED CONCRETE SPANS, AN ALLOWANCE SHALL BE MADE FOR DEAD LOAD DEFLECTIONS, SETTLEMENT OF FALSEWORK, AND PERMANENT CAMBER WHICH SHALL BE PROVIDED FOR IN ADDITION TO THE ELEVATIONS SHOWN. AFTER REMOVAL OF THE FALSEWORK, THE FINISHED STRUCTURES SHALL CONFORM TO THE PROFILE AND ELEVATIONS SHOWN ON THE PLANS AND CONSTRUCTION ELEVATIONS FURNISHED BY THE ENGINEER.

DETAILED DRAWINGS FOR FALSEWORK OR FORMS FOR BRIDGE SUPERSTRUCTURE AND ANY STRUCTURE OR PARTS OF A STRUCTURE AS NOTED ON THE PLANS SHALL BE SUBMITTED TO THE ENGINEER FOR APPROVAL BEFORE CONSTRUCTION OF THE FALSEWORK OR FORMS IS STARTED.

REINFORCING STEEL:

ALL REINFORCING STEEL SHALL BE DEFORMED. DIMENSIONS RELATIVE TO PLACEMENT OF REINFORCING ARE TO CENTERS OF BARS UNLESS OTHERWISE INDICATED IN THE PLANS. DIMENSIONS ON BAR DETAILS ARE TO CENTERS OF BARS OR ARE OUT TO OUT AS INDICATED ON PLANS.

WIRE BAR SUPPORTS SHALL BE PROVIDED FOR REINFORCING STEEL WHERE INDICATED ON THE PLANS. WHEN BAR SUPPORT PIECES ARE PLACED IN CONTINUOUS LINES, THEY SHALL BE SO PLACED THAT THE ENDS OF THE SUPPORTING WIRES SHALL BE LAPPED TO LOCK LEGS ON ADJOINING PIECES.

STRUCTURAL STEEL:

AT THE CONTRACTOR'S OPTION, HE MAY SUBSTITUTE 7/8" Ø SHEAR STUDS FOR THE 3/4" Ø STUDS SPECIFIED ON THE PLANS. THIS SUBSTITUTION SHALL BE MADE AT THE RATE OF 3 - 7/8" Ø STUDS FOR 4 - 3/4" Ø STUDS, AND STUD SPACING CHANGES SHALL BE MADE AS NECESSARY TO PROVIDE THE SAME EQUIVALENT NUMBER OF 7/8" Ø STUDS ALONG THE BEAM AS SHOWN FOR 3/4" Ø STUDS BASED ON THE RATIO OF 3 - 7/8" Ø STUDS FOR 4 - 3/4" Ø STUDS. STUDS OF THE LENGTH SPECIFIED ON THE PLANS MUST BE PROVIDED. THE MAXIMUM SPACING SHALL BE 2'-0".

EXCEPT AT THE INTERIOR SUPPORTS OF CONTINUOUS BEAMS WHERE THE COVER PLATE IS IN CONTACT WITH BEARING PLATE, THE CONTRACTOR MAY, AT HIS OPTION, SUBSTITUTE FOR THE COVER PLATES DESIGNATED ON THE PLANS COVER PLATES OF THE EQUIVALENT AREA PROVIDED THESE PLATES ARE AT LEAST 5/16" IN THICKNESS AND DO NOT EXCEED A WIDTH EQUAL TO THE FLANGE WIDTH LESS 2" OR A THICKNESS EQUAL TO 2 TIMES THE FLANGE THICKNESS. THE SIZE OF FILLET WELDS SHALL CONFORM TO THE REQUIREMENTS OF THE CURRENT ANSI/AASHTO/AWS "BRIDGE WELDING CODE". ELECTROSLAG WELDING WILL NOT BE PERMITTED.

WITH THE SOLE EXCEPTION OF EDGES AT SURFACES WHICH BEAR ON OTHER SURFACES, ALL SHARP EDGES AND ENDS OF SHAPES AND PLATES SHALL BE SLIGHTLY ROUNDED BY SUITABLE MEANS TO A RADIUS OF APPROXIMATELY 1/16 INCH OR EQUIVALENT FLAT SURFACE AT A SUITABLE ANGLE PRIOR TO PAINTING, GALVANIZING, OR METALLIZING.

HANDRAILS AND POSTS:

METAL STANDARDS AND FACES OF THE CONCRETE END POSTS FOR THE METAL RAIL SHALL BE SET NORMAL TO THE GRADE OF THE CURB, UNLESS OTHERWISE SHOWN ON PLANS. THE METAL RAIL AND TOPS OF CONCRETE POSTS USED WITH THE ALUMINUM RAIL SHALL BE BUILT PARALLEL TO THE GRADE OF THE CURB.

METAL HANDRAILS SHALL BE IN ACCORDANCE WITH THE PLANS. RAILS SHALL BE AS MANUFACTURED FOR BRIDGE RAILING. CASTINGS SHALL BE OF A UNIFORM APPEARANCE. FINS AND OTHER DEFORMATIONS RESULTING FROM CASTING OR OTHERWISE SHALL BE REMOVED IN A MANNER SO THAT A UNIFORM COLORING OF THE COMPLETED CASTING SHALL BE OBTAINED. CASTINGS WITH DISCOLORATIONS OR OF NON-UNIFORM COLORING WILL NOT BE ACCEPTED. CERTIFIED MILL REPORTS ARE REQUIRED FOR METAL RAILS AND POSTS.

SPECIAL NOTES:

GENERALLY, IN CASE OF DISCREPANCY, THIS STANDARD SHEET OF NOTES SHALL GOVERN OVER THE SPECIFICATIONS, BUT THE REMAINDER OF THE PLANS SHALL GOVERN OVER NOTES HEREON, AND SPECIAL PROVISIONS SHALL GOVERN OVER ALL. SEE SPECIFICATIONS ARTICLE 105-4.

ENGLISH

JANUARY, 1990