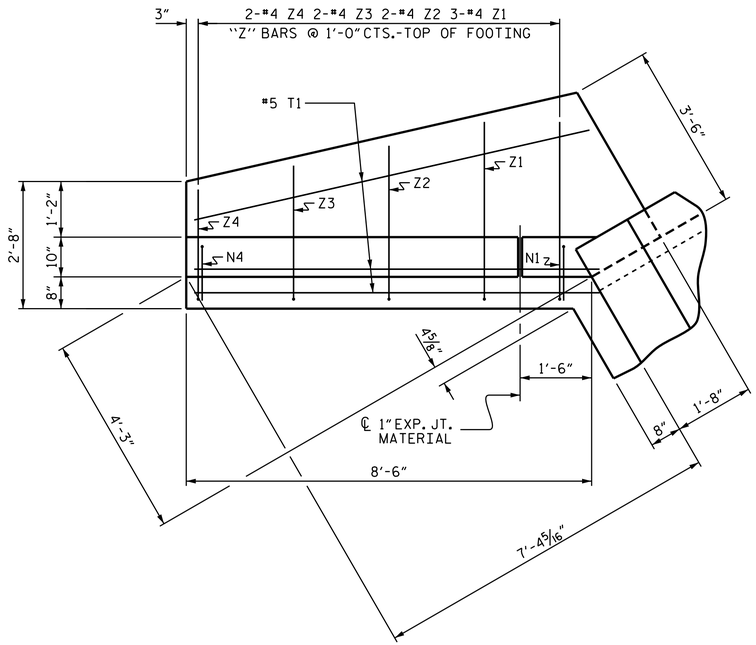

PLAN

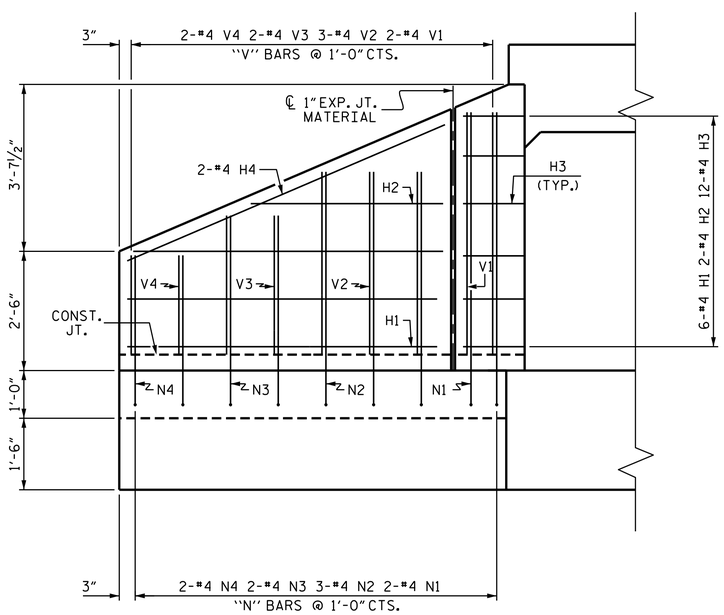

ELEVATION

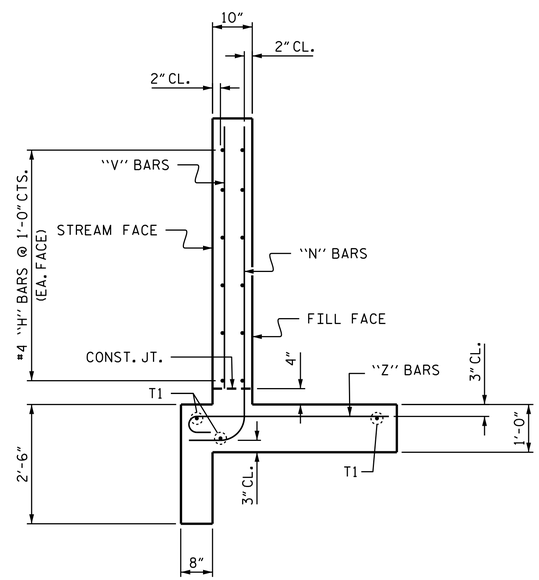

TYPICAL WING SECTION

BAR TYPES

ALL BAR DIMENSIONS ARE OUT TO OUT.

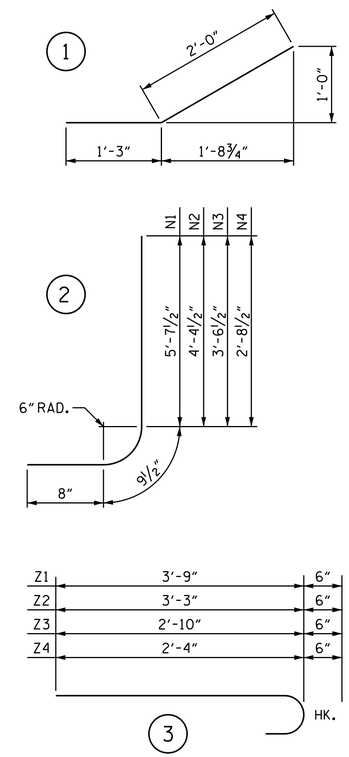

BILL OF MATERIAL

BAR	NO.	SIZE	TYPE	LENGTH	WEIGHT
H1	6	#4	STR	6'-6"	26
H2	2	#4	STR	4'-0"	5
H3	12	#4	1	3'-3"	26
H4	2	#4	STR	7'-3"	10
N1	2	#4	2	7'-1"	9
N2	3	#4	2	5'-10"	12
N3	2	#4	2	5'-0"	7
N4	2	#4	2	4'-2"	6
T1	3	#5	STR	8'-6"	27
V1	2	#4	STR	5'-1"	7
V2	3	#4	STR	3'-10"	8
V3	2	#4	STR	2'-11"	4
V4	2	#4	STR	2'-1"	3
Z1	3	#4	3	4'-3"	9
Z2	2	#4	3	3'-9"	5
Z3	2	#4	3	3'-4"	4
Z4	2	#4	3	2'-10"	4

REINFORCING STEEL FOR 1 WING (2 REQUIRED) LBS. 172

STAGE I

CLASS A CONCRETE

WING	C.Y.	2.7
EDGE BEAM	C.Y.	1.0
END CURTAIN WALL	C.Y.	0.9
SILL	C.Y.	0.2
TOTAL	C.Y.	4.8

STAGE II

CLASS A CONCRETE

WING	C.Y.	2.7
EDGE BEAMS	C.Y.	2.1
END CURTAIN WALL	C.Y.	0.3
SILL	C.Y.	1.0
	C.Y.	0.2
TOTAL	C.Y.	6.3

PROJECT NO. W-5209F
FORSYTH COUNTY
STATION: 11+26.00 -L-

SHEET 6 OF 6

STATE OF NORTH CAROLINA
DEPARTMENT OF TRANSPORTATION
RALEIGH

STANDARD WINGS FOR CONCRETE BOX CULVERT

H = 5'-0" SLOPE = 2:1
90° SKEW

NORTH CAROLINA PROFESSIONAL SEAL 10730 ENGINEER D. ANDRE DAVENPORT, JR.

DocuSigned by: D. André Davenport, Jr. 895DC284F664495... 11/19/2014

REVISIONS						
NO.	BY:	DATE:	NO.	BY:	DATE:	
1			3			
2			4			

SHEET NO. C-6
TOTAL SHEETS 6

STD. NO. CW9005

ASSEMBLED BY : J.P. MCCARTHA	DATE : 1-27-14
CHECKED BY : R.P. PATEL	DATE : 2-7-14
DRAWN BY : CCJ 10/99	
CHECKED BY : RWW 03/00	

R:\Structures\Plans\W5209F_SD_CU_01.dgn
19-NOV-2014 14:11