TOTAL STRUCTURE QUANTITIES

	STAGE I	STAGE II	TOTAL
CLASS A CONCRETE			
BARREL @ 0.9430 CY/FT (STAGE I) 1.000 CY/FT (STAGE II)	42.7 C.Y.	45.2 C.Y.	87.9 C.Y.
WING, ETC.	4.8 C.Y.	6.3 C.Y.	11.1 C.Y.
TOTALS	47.5 C.Y.	51.5 C.Y.	99.0 C.Y.
REINFORCING STEEL			
BARREL	8,042 LBS.	6,970 LBS.	15,012 LBS.
WING, ETC.	172 LBS.	172 LBS.	344 LBS.
TOTALS	8,214 LBS.	7,132 LBS.	15,356 LBS.

BILL OF MATERIAL

STAGE I

BAR	NO.	SIZE	TYPE	LENGTH	WEIGHT
A1	97	#4	1	5'-11"	383
A2	309	#5	1	6'-1"	1,961
A200	51	#4	STR	17'-4"	591
A201	2	#4	STR	16'-11"	23
A202	2	#4	STR	15'-5"	21
A203	2	#4	STR	14'-0"	19
A204	2	#4	STR	12'-6"	17
A205	2	#4	STR	11'-0"	15
A206	2	#4	STR	9'-7"	13
A207	2	#4	STR	8'-1"	11
A208	2	#4	STR	6'-7"	9
A209	2	#4	STR	5'-1"	7
A210	2	#4	STR	3'-8"	5
A211	2	#4	STR	2'-2"	3
A400	62	#6	STR	17'-10"	1,661
A401	2	#6	STR	16'-6"	50
A402	2	#6	STR	15'-4"	46
A403	2	#6	STR	14'-1"	42
A404	2	#6	STR	12'-10"	39
A405	2	#6	STR	11'-8"	35
A406	2	#6	STR	10'-5"	31
A407	2	#6	STR	9'-2"	28
A408	2	#6	STR	8'-0"	24
A409	2	#6	STR	6'-9"	20
A410	2	#6	STR	5'-6"	17
A411	2	#6	STR	4'-3"	13
A412	2	#6	STR	3'-1"	9
A413	2	#6	STR	1'-10"	6
B1	60	#4	STR	6'-2"	247
B3	212	#4	STR	6'-2"	873
C1	143	#4	STR	15'-2"	1,449
D1	14	#6	STR	2'-6"	53
D2	2	#6	STR	1'-3"	4
E1	16	#5	STR	4'-7"	76
S1	6	#6	STR	26'-9"	241
REINFORCING STEEL				LBS.	8,042

BILL OF MATERIAL

STAGE II

BAR	NO.	SIZE	TYPE	LENGTH	WEIGHT
A1	49	#4	1	5'-11"	194
A2	49	#5	1	6'-1"	311
A100	53	#5	STR	20'-10"	1,152
A101	2	#5	STR	19'-6"	41
A102	2	#5	STR	18'-2"	38
A103	2	#5	STR	16'-10"	35
A104	2	#5	STR	15'-7"	33
A105	2	#5	STR	14'-3"	30
A106	2	#5	STR	12'-11"	27
A107	2	#5	STR	11'-8"	24
A108	2	#5	STR	10'-4"	22
A109	2	#5	STR	9'-0"	19
A110	2	#5	STR	7'-8"	16
A111	2	#5	STR	6'-5"	13
A112	2	#5	STR	5'-1"	11
A113	2	#5	STR	3'-9"	8
A114	2	#5	STR	2'-5"	5
A115	2	#5	STR	1'-2"	2
A300	56	#6	STR	20'-11"	1,761
A301	2	#6	STR	20'-0"	60
A302	2	#6	STR	18'-9"	56
A303	2	#6	STR	17'-6"	53
A304	2	#6	STR	16'-3"	49
A305	2	#6	STR	15'-0"	45
A306	2	#6	STR	13'-9"	41
A307	2	#6	STR	12'-6"	38
A308	2	#6	STR	11'-3"	34
A309	2	#6	STR	10'-0"	30
A310	2	#6	STR	8'-9"	26
A311	2	#6	STR	7'-6"	23
A312	2	#6	STR	6'-3"	19
A313	2	#6	STR	5'-0"	15
A314	2	#6	STR	3'-9"	11
A315	2	#6	STR	2'-6"	8
A316	2	#6	STR	1'-3"	4
A220	47	#4	STR	5'-5"	170
A221	2	#4	STR	4'-6"	6
A222	2	#4	STR	3'-0"	4
A420	56	#6	STR	5'-5"	456
A421	2	#6	STR	4'-7"	14
A422	2	#6	STR	3'-4"	10
B1	31	#4	STR	6'-2"	128
C1	139	#4	STR	15'-2"	1,408
D1	22	#6	STR	2'-6"	83
D2	2	#6	STR	1'-3"	4
S2	6	#6	STR	7'-11"	71
S3	6	#6	STR	30'-6"	275
G1	4	#5	STR	20'-11"	87
REINFORCING STEEL				LBS.	6,970

SPLICE LENGTHS CHART

BAR	SIZE	SPLICE LENGTH
A200, A220	#4	1'-9"
A400, A420	#6	2'-3"
B1, B3	#4	1'-9"
C1	#4	1'-11"
S1, S2	#6	3'-10"

BAR TYPE

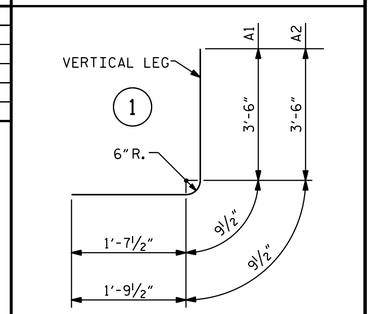

ALL BAR DIMENSIONS ARE OUT TO OUT.

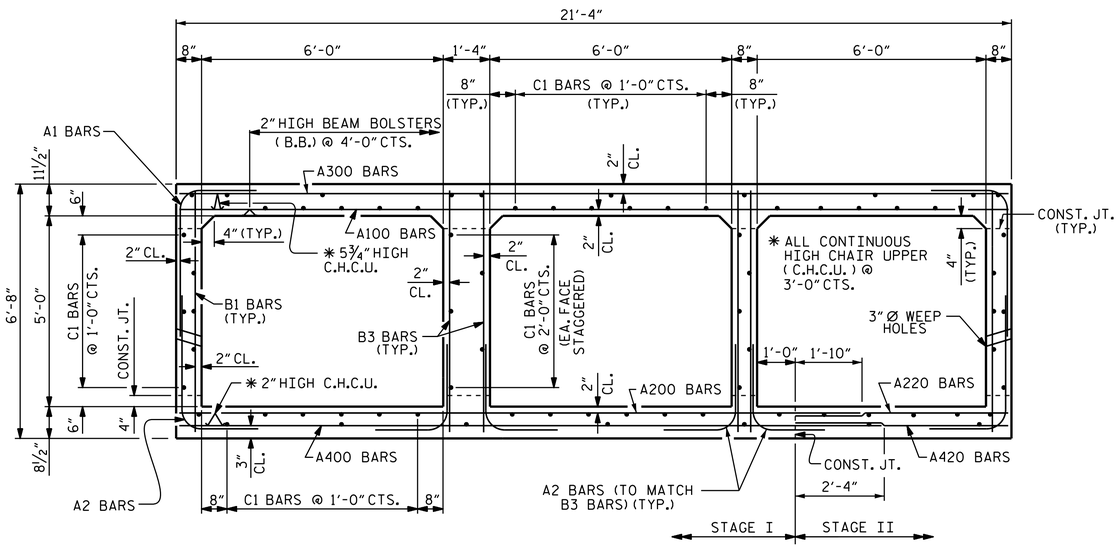

RIGHT ANGLE SECTION OF BARREL

THERE ARE 73 "C" BARS IN SECTION OF BARREL
(LOOKING DOWNSTREAM)

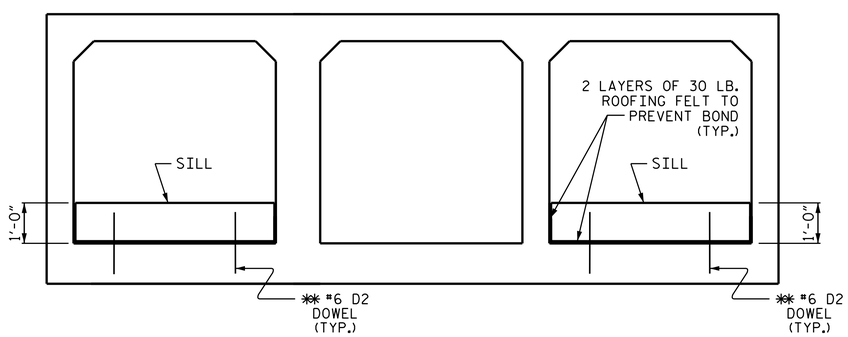

INLET ELEVATION

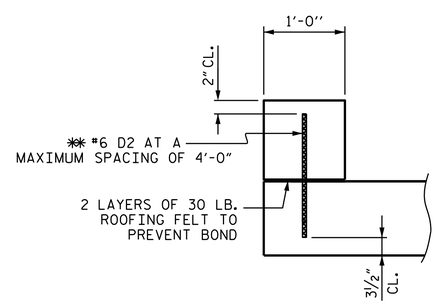

SECTION THROUGH SILL

✱✱ DOWELS MAY BE PUSHED INTO GREEN CONCRETE AFTER SLAB HAS BEEN FLOAT FINISHED.

CULVERT SILL DETAILS

PROJECT NO. W-5209F
FORSYTH COUNTY
STATION: 11+26.00 -L-

SHEET 5 OF 6

STATE OF NORTH CAROLINA
DEPARTMENT OF TRANSPORTATION
RALEIGH

TRIPLE 6 FT. X 5 FT. CONCRETE BOX CULVERT (EXTENSION)

132°-59'-00" SKEW

NORTH CAROLINA PROFESSIONAL SEAL 10730 ENGINEER D. ANDRE' DAVENPORT, JR.

DocuSigned by: D. André Davenport, Jr. 895DC284F664495... 11/19/2014

REVISIONS							SHEET NO.
NO.	BY:	DATE:	NO.	BY:	DATE:		C-5
1			3				TOTAL SHEETS
2			4				6

DRAWN BY : J. P. MCCARTHA DATE : 1-29-14
CHECKED BY : R.P. PATEL DATE : 2-7-14
DESIGN ENGINEER OF RECORD: J.P. MCCARTHA DATE : 3-19-14

19-NOV-2014 14:11
R:\Structures\Plans\W5209F_SD_CU_01.dgn
dadavenport