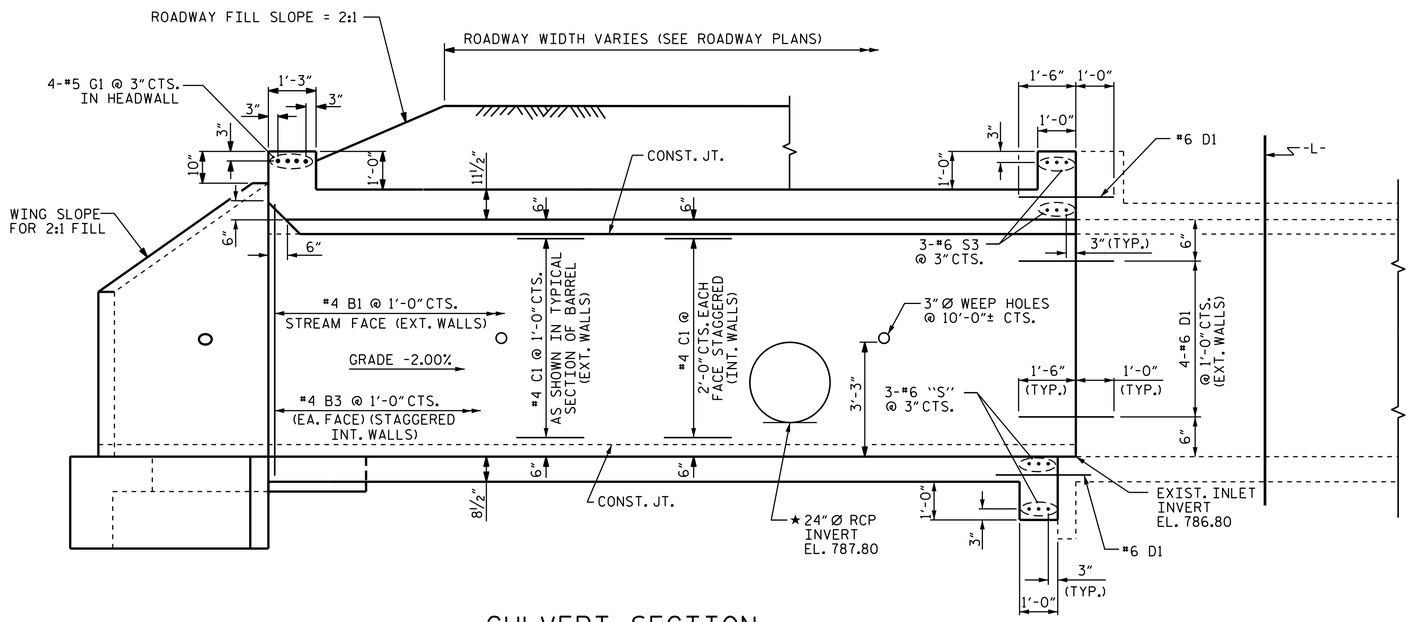

CULVERT SECTION

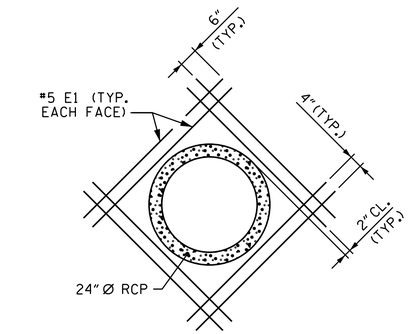

DETAIL OF REINFORCING AROUND 24"Ø PIPE

★ THE 24"Ø RCP THROUGH THE SIDEWALL OF THE CULVERT SHALL BE LOCATED BY THE ENGINEER. THE REINFORCING STEEL SHALL BE FIELD BENT AS NECESSARY TO CLEAR PIPE.

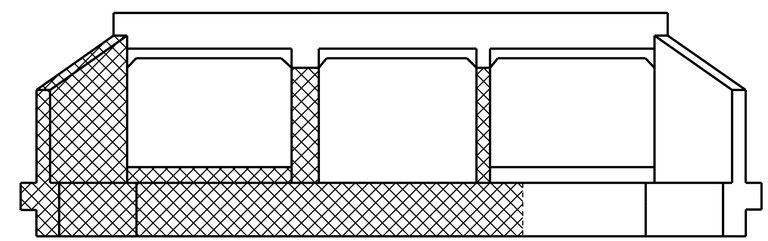

CONSTRUCTION STAGING

(LOOKING DOWNSTREAM)

STAGE I CONSTRUCTION

STAGE II CONSTRUCTION

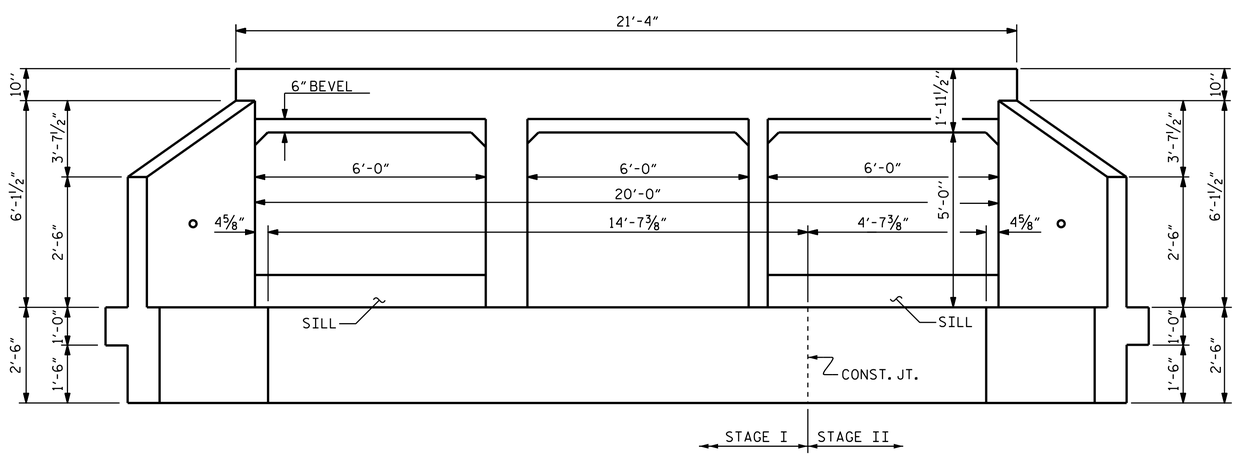

INLET END ELEVATION

PROJECT NO. W-5209F

FORSYTH COUNTY

STATION: 11+26.00 -L-

SHEET 2 OF 6

STATE OF NORTH CAROLINA
DEPARTMENT OF TRANSPORTATION
RALEIGH

TRIPLE 6 FT. X 5 FT. CONCRETE BOX CULVERT EXTENSION

132°-59'-00" SKEW

NORTH CAROLINA PROFESSIONAL SEAL 10730 ENGINEER D. ANDRE DAVENPORT, JR.

DocuSigned by: D. André Davenport, Jr. 895DC284F664495... 11/19/2014

REVISIONS						SHEET NO.
NO.	BY:	DATE:	NO.	BY:	DATE:	C-2
1			3			TOTAL SHEETS
2			4			6

ASSEMBLED BY : J. P. MCCARTHA DATE : 1-29-14
CHECKED BY : R.P. PATEL DATE : 2-7-14
DESIGN ENGINEER OF RECORD: J. P. MCCARTHA DATE : 3-19-14

19-NOV-2014 14:11
R:\Structures\Plans\W5209F_SD_CU_01.dgn
dadavenport