09/08/99

PROJECT: 17BP.9.R.17

CONTRACT: DI00055

See Sheet 1-A For Index of Sheets
See Sheet 1-B For Symbology Sheet

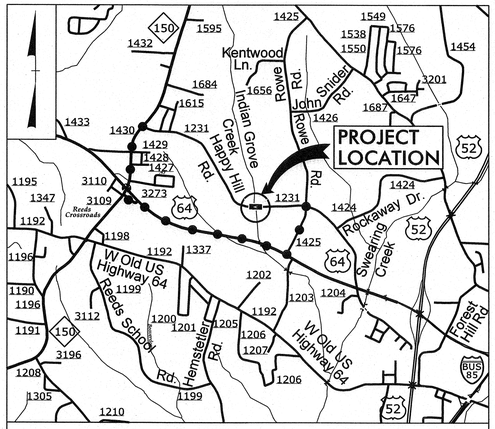

VICINITY MAP

DETOUR ROUTE

STATE OF NORTH CAROLINA
DIVISION OF HIGHWAYS

DAVIDSON COUNTY

STATE	STATE PROJECT REFERENCE NO.	SHEET NO.	TOTAL SHEETS
N.C.	17BP.9.R.17	1	

STATE PROJ. NO.	F. A. PROJ. NO.	DESCRIPTION
17BP.9.R.17	N/A	PE
17BP.9.R.17	N/A	R/W, UTILITIES
17BP.9.R.17	N/A	CONST.

LOCATION: REPLACE EXISTING BRIDGE NO. 79 SR 1231 – HAPPY HILL RD.

TYPE OF WORK: GRADING, DRAINAGE, WIDENING, BOX CULVERT AND PAVEMENT MARKINGS

NAD 83
NC GRID

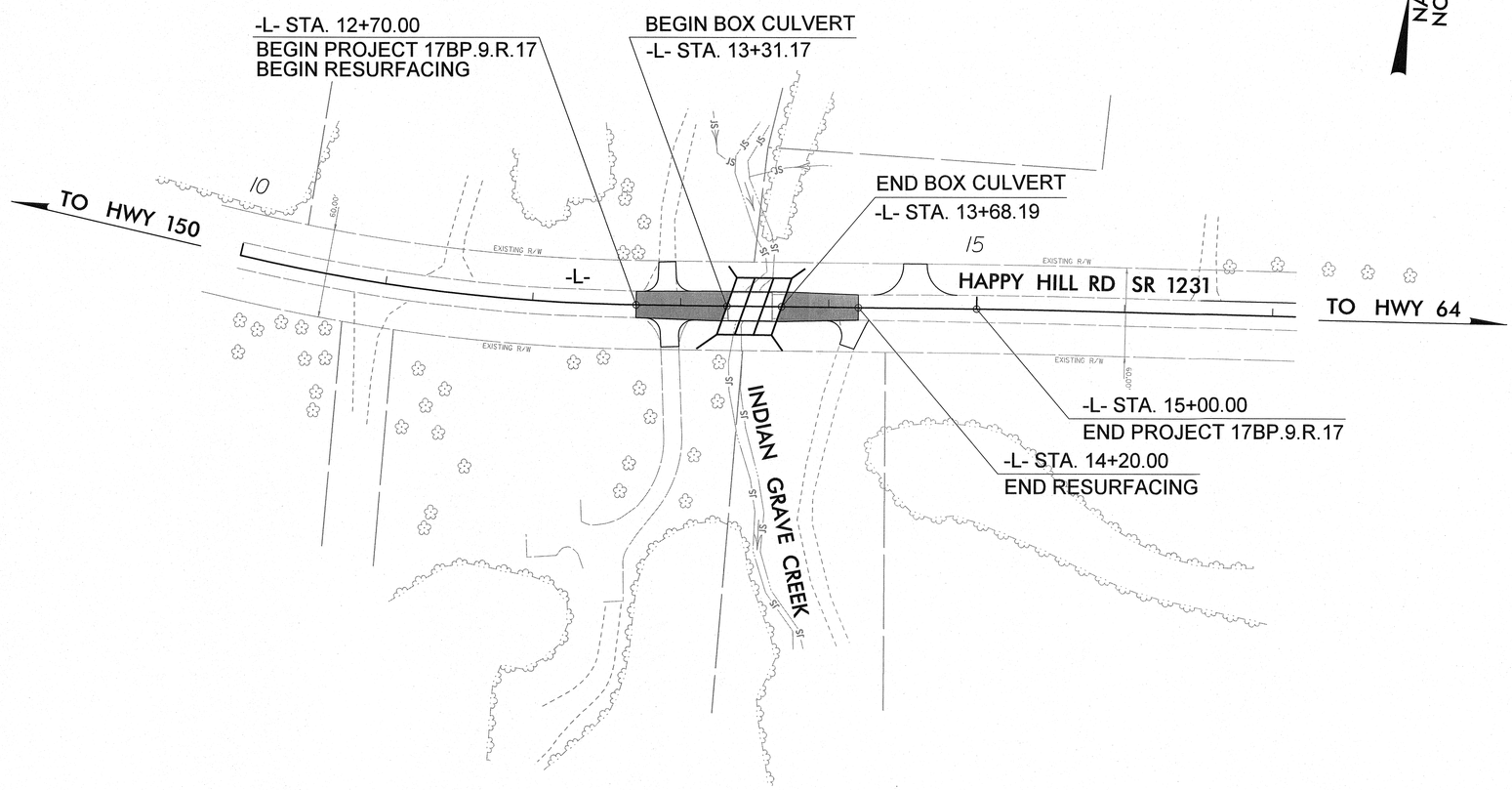

GRAPHIC SCALES

50 25 0 50 100
PLANS

50 25 0 50 100
PROFILE (HORIZONTAL)

10 5 0 10 20
PROFILE (VERTICAL)

DESIGN DATA

ADT 2009 = 710
V = 55 MPH

PROJECT LENGTH

LENGTH ROADWAY TIP PROJECT 17BP.9.R.17	=	0.037 MI
LENGTH STRUCTURE TIP PROJECT 17BP.9.R.17	=	0.007 MI
TOTAL LENGTH TIP PROJECT 17BP.9.R.17	=	0.044 MI

PLANS PREPARED BY:
PARSONS BRINCKERHOFF
434 FAYETTEVILLE STREET
SUITE 1500
RALEIGH, NC 27601
LICENSE NO. F-0165

2012 STANDARD SPECIFICATIONS

RIGHT OF WAY DATE:
JULY 31, 2013

LETTING DATE:
APRIL 23, 2014

NCDOT CONTACT:

PLANS PREPARED FOR:
DIVISION OF HIGHWAYS
1000 Birch Ridge Dr.
Raleigh NC, 27610

DAVID KEISER, PE
PROJECT ENGINEER

LAUREN WILSON, EI
PROJECT DESIGN ENGINEER

MATTHEW JONES, PE
DIVISION BRIDGE – PROGRAM MANAGER

HYDRAULICS ENGINEER
NORTH CAROLINA PROFESSIONAL SEAL 032312 ENGINEER CHARLES W. HEMNER
SIGNATURE: 3-27-14 P.E.

ROADWAY DESIGN ENGINEER
NORTH CAROLINA PROFESSIONAL SEAL 033400 ENGINEER DAVID Z. KEISER
SIGNATURE: 3-27-2014 P.E.

DIVISION OF HIGHWAYS
STATE OF NORTH CAROLINA

STATE OF NORTH CAROLINA DEPARTMENT OF TRANSPORTATION

P.E.
STATE HIGHWAY DESIGN ENGINEER

9:50:19 AM
17BP.9.R.17_Rdy_tsh.dgn
3/27/2014

PROJECT REFERENCE NO.	SHEET NO.
17BP.9.R.17	1-A

ROADWAY DESIGN ENGINEER

NORTH CAROLINA PROFESSIONAL SEAL 033400 ENGINEER DAVID Z. KEISER 3-27-2014

INDEX OF SHEETS

SHEET NUMBER	SHEET
1	TITLE SHEET
1-A	INDEX OF SHEETS, GENERAL NOTES AND LIST OF STANDARD DRAWINGS
1-B	CONVENTIONAL SYMBOLS
1-C	SURVEY CONTROL SHEET
2	PAVEMENT SCHEDULE, TYPICAL SECTIONS, AND MILLING DETAIL
3	LIST OF PIPES, ENDWALLS, ETC. (FOR PIPES 48" & UNDER), GUARDRAIL SUMMARY, SUMMARY OF EARTHWORK, PAVEMENT REMOVAL SUMMARY
4	PLAN AND PROFILE SHEET
TCP-1 THRU TCP-2	TRAFFIC CONTROL PLANS
EC-1 THRU EC-3	EROSION CONTROL PLANS
X-1 THRU X-2	CROSS-SECTIONS
C-1 THRU C-6	CULVERT PLANS
SN	STANDARD NOTES

2012 ROADWAY ENGLISH STANDARD DRAWINGS

The following Roadway Standards as appear in "Roadway Standard Drawings" Highway Design Branch - N. C. Department of Transportation - Raleigh, N. C., Dated January, 2012 are applicable to this project and by reference hereby are considered a part of these plans:

STD.NO.	TITLE
DIVISION 2 - EARTHWORK	
200.03	Method of Clearing - Method III
225.02	Guide for Grading Subgrade - Secondary and Local
225.04	Method of Obtaining Superelevation - Two Lane Pavement
DIVISION 3 - PIPE CULVERTS	
300.01	Method of Pipe Installation
310.10	Driveway Pipe Construction
DIVISION 5 - SUBGRADE, BASES AND SHOULDERS	
560.01	Method of Shoulder Construction - High Side of Superelevated Curve - Method I
DIVISION 8 - INCIDENTALS	
862.01	Guardrail Placement
862.02	Guardrail Installation
862.03	Structure Anchor Units

GENERAL NOTES:

2012 SPECIFICATIONS
EFFECTIVE: 01-17-12
REVISED: 11/01/11

GRADING AND SURFACING OR RESURFACING AND WIDENING:

THE GRADE LINES SHOWN DENOTE THE FINISHED ELEVATION OF THE PROPOSED SURFACING AT GRADE POINTS SHOWN ON THE TYPICAL SECTIONS. WHERE NO GRADE LINES ARE SHOWN, THE PROFILES SHOWN DENOTE THE TOP ELEVATION OF THE EXISTING PAVEMENT ALONG THE CENTER LINE OF SURVEY ON WHICH THE PROPOSED RESURFACING WILL BE PLACED. GRADE LINES MAY BE ADJUSTED BY THE ENGINEER IN ORDER TO SECURE A PROPER TIE-IN.

CLEARING:

CLEARING ON THIS PROJECT SHALL BE PERFORMED TO THE LIMITS ESTABLISHED BY METHOD III.

SUPERELEVATION:

ALL CURVES ON THIS PROJECT SHALL BE SUPERELEVATED IN ACCORDANCE WITH STD. NO. 225.04 USING THE RATE OF SUPERELEVATION AND RUNOFF SHOWN ON THE PLANS. SUPERELEVATION IS TO BE REVOLVED ABOUT THE GRADE POINTS SHOWN ON THE TYPICAL SECTIONS.

SHOULDER CONSTRUCTION:

ASPHALT, EARTH, AND CONCRETE SHOULDER CONSTRUCTION ON THE HIGH SIDE OF SUPERELEVATED CURVES SHALL BE IN ACCORDANCE WITH STD. NO. 560.01.

SIDE ROADS:

THE CONTRACTOR WILL BE REQUIRED TO DO ALL NECESSARY WORK TO PROVIDE SUITABLE CONNECTIONS WITH ALL ROADS, STREETS, AND DRIVE ENTERING THIS PROJECT. THIS WORK WILL BE PAID FOR AT THE CONTRACT UNIT PRICE FOR THE PARTICULAR ITEMS INVOLVED.

GUARDRAIL:

THE GUARDRAIL LOCATIONS SHOWN ON THE PLANS MAY BE ADJUSTED DURING CONSTRUCTION AS DIRECTED BY THE ENGINEER. THE CONTRACTOR SHOULD CONSULT WITH THE ENGINEER PRIOR TO ORDERING GUARDRAIL MATERIAL.

UTILITIES:

UTILITY OWNERS ON THIS PROJECT ARE:
GAS - CITY OF LEXINGTON - CONTACT: Mr. ANDY THOMAS 336-248-3945
WATER - DAVIDSON WATER, INC. - CONTACT: Mr. ROBERT WALTERS 336-731-2341

04/16/11

PROJECT REFERENCE NO.	SHEET NO.
17BP.9.R.17	1-B

Note: Not to Scale

S.U.E. = Subsurface Utility Engineering

STATE OF NORTH CAROLINA
DIVISION OF HIGHWAYS

CONVENTIONAL PLAN SHEET SYMBOLS

BOUNDARIES AND PROPERTY:

- State Line
- County Line
- Township Line
- City Line
- Reservation Line
- Property Line
- Existing Iron Pin — EIP
- Property Corner
- Property Monument — ECM
- Parcel/Sequence Number — 123
- Existing Fence Line
- Proposed Woven Wire Fence
- Proposed Chain Link Fence
- Proposed Barbed Wire Fence
- Existing Wetland Boundary — WLB
- Proposed Wetland Boundary — WLB
- Existing Endangered Animal Boundary — EAB
- Existing Endangered Plant Boundary — EPB
- Known Soil Contamination: Boundary or Site
- Potential Soil Contamination: Boundary or Site

BUILDINGS AND OTHER CULTURE:

- Gas Pump Vent or U/G Tank Cap
- Sign — S
- Well — W
- Small Mine
- Foundation
- Area Outline
- Cemetery
- Building
- School
- Church
- Dam

HYDROLOGY:

- Stream or Body of Water
- Hydro, Pool or Reservoir
- Jurisdictional Stream — JS
- Buffer Zone 1 — BZ 1
- Buffer Zone 2 — BZ 2
- Flow Arrow
- Disappearing Stream
- Spring
- Wetland
- Proposed Lateral, Tail, Head Ditch — FLOW
- False Sump

RAILROADS:

- Standard Gauge — CSX TRANSPORTATION
- RR Signal Milepost — MILEPOST 35
- Switch — SWITCH
- RR Abandoned
- RR Dismantled

RIGHT OF WAY:

- Baseline Control Point
- Existing Right of Way Marker
- Existing Right of Way Line
- Proposed Right of Way Line — RW
- Proposed Right of Way Line with Iron Pin and Cap Marker — RW
- Proposed Right of Way Line with Concrete or Granite Marker — RW
- Existing Control of Access — CA
- Proposed Control of Access — CA
- Existing Easement Line — E
- Proposed Temporary Construction Easement — E
- Proposed Temporary Drainage Easement — TDE
- Proposed Permanent Drainage Easement — PDE
- Proposed Permanent Drainage / Utility Easement — DUE
- Proposed Permanent Utility Easement — PUE
- Proposed Temporary Utility Easement — TUE
- Proposed Aerial Utility Easement — AUE
- Proposed Permanent Easement with Iron Pin and Cap Marker

ROADS AND RELATED FEATURES:

- Existing Edge of Pavement
- Existing Curb
- Proposed Slope Stakes Cut — C
- Proposed Slope Stakes Fill — F
- Proposed Curb Ramp — CR
- Curb Cut Future Ramp — CCFR
- Existing Metal Guardrail
- Proposed Guardrail
- Existing Cable Guiderail
- Proposed Cable Guiderail
- Equality Symbol
- Pavement Removal

VEGETATION:

- Single Tree
- Single Shrub
- Hedge
- Woods Line
- Orchard
- Vineyard — Vineyard

EXISTING STRUCTURES:

MAJOR:

- Bridge, Tunnel or Box Culvert — CONC
- Bridge Wing Wall, Head Wall and End Wall — CONC WW

MINOR:

- Head and End Wall — CONC HW
- Pipe Culvert
- Footbridge
- Drainage Box: Catch Basin, DI or JB — CB
- Paved Ditch Gutter
- Storm Sewer Manhole — S
- Storm Sewer — S

UTILITIES:

POWER:

- Existing Power Pole
- Proposed Power Pole
- Existing Joint Use Pole
- Proposed Joint Use Pole
- Power Manhole — P
- Power Line Tower
- Power Transformer
- U/G Power Cable Hand Hole
- H-Frame Pole
- Recorded U/G Power Line — P
- Designated U/G Power Line (S.U.E.*) — P

TELEPHONE:

- Existing Telephone Pole
- Proposed Telephone Pole
- Telephone Manhole — T
- Telephone Booth
- Telephone Pedestal — T
- Telephone Cell Tower
- U/G Telephone Cable Hand Hole — HH
- Recorded U/G Telephone Cable — T
- Designated U/G Telephone Cable (S.U.E.*) — T
- Recorded U/G Telephone Conduit — TC
- Designated U/G Telephone Conduit (S.U.E.*) — TC
- Recorded U/G Fiber Optics Cable — T FO
- Designated U/G Fiber Optics Cable (S.U.E.*) — T FO

WATER:

- Water Manhole — W
- Water Meter
- Water Valve
- Water Hydrant
- Recorded U/G Water Line — W
- Designated U/G Water Line (S.U.E.*) — W
- Above Ground Water Line — A/G Water

TV:

- TV Satellite Dish
- TV Pedestal — C
- TV Tower
- U/G TV Cable Hand Hole — HH
- Recorded U/G TV Cable — TV
- Designated U/G TV Cable (S.U.E.*) — TV
- Recorded U/G Fiber Optic Cable — TV FO
- Designated U/G Fiber Optic Cable (S.U.E.*) — TV FO

GAS:

- Gas Valve
- Gas Meter
- Recorded U/G Gas Line — G
- Designated U/G Gas Line (S.U.E.*) — G
- Above Ground Gas Line — A/G Gas

SANITARY SEWER:

- Sanitary Sewer Manhole
- Sanitary Sewer Cleanout
- U/G Sanitary Sewer Line — SS
- Above Ground Sanitary Sewer — A/G Sanitary Sewer
- Recorded SS Forced Main Line — FSS
- Designated SS Forced Main Line (S.U.E.*) — FSS

MISCELLANEOUS:

- Utility Pole
- Utility Pole with Base
- Utility Located Object
- Utility Traffic Signal Box — S
- Utility Unknown U/G Line — ?UTL
- U/G Tank; Water, Gas, Oil
- Underground Storage Tank, Approx. Loc. — UST
- A/G Tank; Water, Gas, Oil
- Geoenvironmental Boring
- U/G Test Hole (S.U.E.*)
- Abandoned According to Utility Records — AATUR
- End of Information — E.O.I.

PROJECT REFERENCE NO.	SHEET NO.
17BP.9.R.17	1C
Location and Surveys	

SURVEY CONTROL SHEET 28–0079

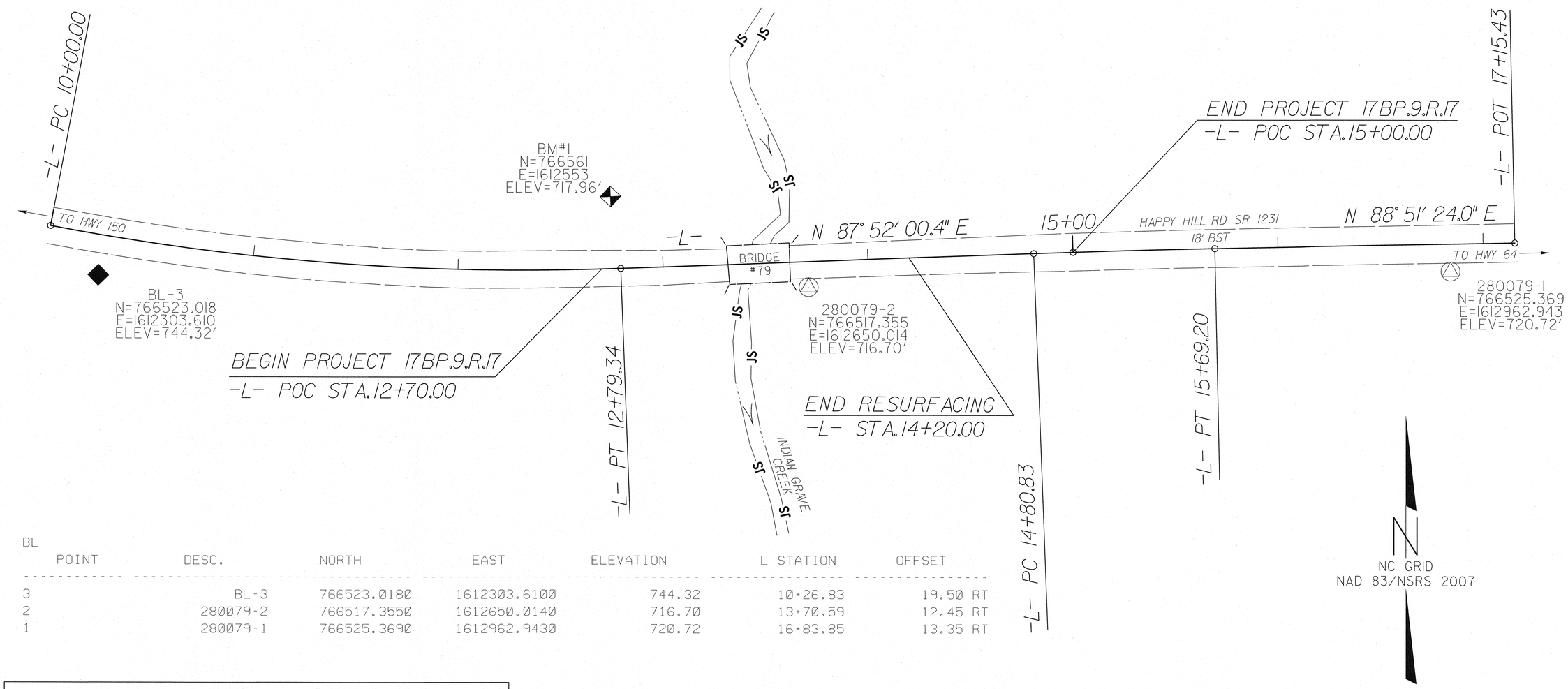

BL

POINT	DESC.	NORTH	EAST	ELEVATION	L STATION	OFFSET
3	BL-3	766523.0180	1612303.6100	744.32	10+26.83	19.50 RT
2	280079-2	766517.3550	1612650.0140	716.70	13+70.59	12.45 RT
1	280079-1	766525.3690	1612962.9430	720.72	16+83.85	13.35 RT

DATUM DESCRIPTION

THE LOCALIZED COORDINATE SYSTEM DEVELOPED FOR THIS PROJECT IS BASED ON THE STATE PLANE COORDINATES ESTABLISHED BY NCDOT FOR MONUMENT "280079-2"
WITH NAD 83/NSRS 2007 STATE PLANE GRID COORDINATES OF
NORTHING: 766517.355(ft) EASTING: 1612650.014(ft)
ELEVATION: 716.70(ft)
THE AVERAGE COMBINED GRID FACTOR USED ON THIS PROJECT (GROUND TO GRID) IS: 0.999897396
THE N.C. LAMBERT GRID BEARING AND LOCALIZED HORIZONTAL GROUND DISTANCE FROM "280079-2" TO -L- STATION 10+00.00 IS
N 85° 25' 48.13" W 370.84'
ALL LINEAR DIMENSIONS ARE LOCALIZED HORIZONTAL DISTANCES
VERTICAL DATUM USED IS NAVD 88

BENCHMARKS (NAVD88)
****
BM#1 ELEVATION = 717.96'
N 766561 E 1612553
-L- STATION 12+75 35' LEFT
RR SPIKE IN NE ROOT OF A 24" OAK
****
****
BM#2 ELEVATION = 720.72'
N 766525.369 E 1612962.943
-L- STATION 16+83.85 13.35' RIGHT
REBAR WITH ALUMINUM CAP STAMPED "280079-1" (SET FLUSH WITH GROUND)
POINT LIES 4.0' SOUTH OF EDGE OF HAPPY HILL ROAD
****

NOTE: DRAWING NOT TO SCALE

NOTES:

1. *THE CONTROL DATA FOR THIS PROJECT CAN BE FOUND ELECTRONICALLY BY SELECTING PROJECT CONTROL DATA AT:*
HTTPS://CONNECT.NCDOT.GOV/RESOURCES/LOCATION/

THE FILES TO BE FOUND ARE AS FOLLOWS:
280079_LS_CONTROL.TXT

SITE CALIBRATION INFORMATION HAS NOT BEEN PROVIDED FOR THIS PROJECT. IF FURTHER INFORMATION IS NEEDED, PLEASE CONTACT THE LOCATION AND SURVEYS UNIT.

INDICATES GEODETIC CONTROL MONUMENTS USED OR SET FOR HORIZONTAL PROJECT CONTROL BY THE NCDOT LOCATION AND SURVEYS UNIT.
PROJECT CONTROL ESTABLISHED USING GLOBAL POSITIONING SYSTEM.

6/2/99

10:16:16 AM
29-Oct-2014
280079_LS_1c.dgn

PROJECT REFERENCE NO.	SHEET NO.
17BP.9.R.17	2

ROADWAY DESIGN ENGINEER

NORTH CAROLINA PROFESSIONAL SEAL 033400 ENGINEER DAVID Z. KEISER
3-27-2014

PLANS PREPARED BY:
PARSONS BRINCKERHOFF
434 FAYETTEVILLE STREET
SUITE 1500
RALEIGH, NC 27601

PAVEMENT SCHEDULE

C1	PROPOSED APPROX. 1½" ASPHALT CONCRETE SURFACE COURSE, TYPE S9.5B, AT AN AVERAGE RATE OF 168 LBS. PER SQ. YARD.
C2	PROPOSED APPROX. 3" ASPHALT CONCRETE SURFACE COURSE, TYPE S9.5B, AT AN AVERAGE RATE OF 168 LBS. PER SQ. YARD. IN EACH OF TWO LAYERS.
C3	PROPOSED VARIABLE DEPTH ASPHALT CONCRETE SURFACE COURSE, TYPE S9.5B, AT AN AVERAGE RATE OF 112 LBS. PER SQ. YARD, PER 1" DEPTH, TO BE PLACED IN LAYERS NOT LESS THAN 1½" OR GREATER THAN 2" IN DEPTH.
D1	PROPOSED APPROX. 2.5" ASPHALT CONCRETE INTERMEDIATE COURSE, TYPE I19.0B, AT AN AVERAGE RATE OF 285 LBS. PER SQ. YARD.
D2	PROPOSED VARIABLE DEPTH ASPHALT CONCRETE INTERMEDIATE COURSE, TYPE I19.0B, AT AN AVERAGE RATE OF 114 LBS. PER SQ. YARD. PER 1" DEPTH, TO BE PLACED IN LAYERS NOT LESS THAN 2½" OR GREATER THAN 4" IN DEPTH.
E1	PROPOSED APPROXIMATE 4" ASPHALT CONCRETE BASE COURSE, TYPE B25.0B, AT AN AVERAGE RATE OF 456 LBS. PER SQ. YARD.
E2	PROPOSED VARIABLE DEPTH ASPHALT CONCRETE BASE COURSE, TYPE B25.0B, AT AN AVERAGE RATE OF 114 LBS. PER SQ. YARD, PER 1" DEPTH, TO BE PLACED IN LAYERS NOT LESS THAN 3" OR GREATER THAN 5½" IN DEPTH.
T	EARTH MATERIAL
U	EXISTING PAVEMENT
V	MILLING ASPHALT PAVEMENT (1.5")

NOTE: ALL PAVEMENT EDGE SLOPES ARE 1:1 UNLESS OTHERWISE SHOWN.

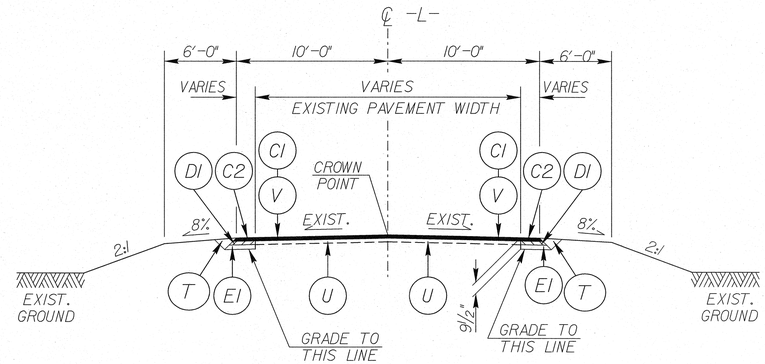

TYPICAL SECTION No. 1

USE TYPICAL SECTION No. 1 AS FOLLOWS:
FROM -L- STA. 12+70.00 TO -L- STA. 13+20.00

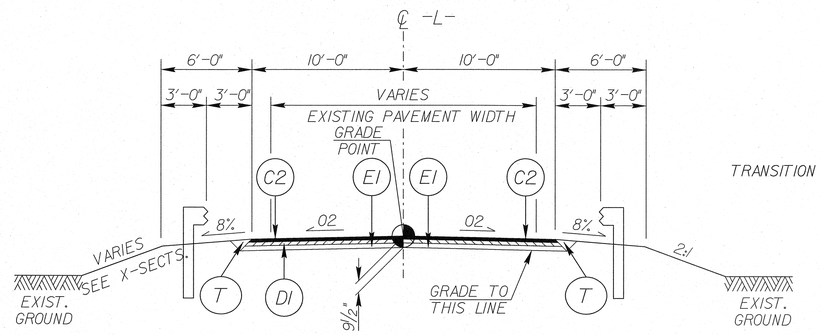

TYPICAL SECTION No. 2

USE TYPICAL SECTION No. 2 AS FOLLOWS:
FROM -L- STA. 13+20.00 TO -L- STA. 13+31.17 (BEGIN CULVERT)
FROM -L- STA. 13+68.19 (END CULVERT) TO -L- STA. 13+70.00
TRANSITION FROM T.S.NO.2 TO EXISTING FROM -L- STA. 13+70.00 TO -L- STA. 14+20.00

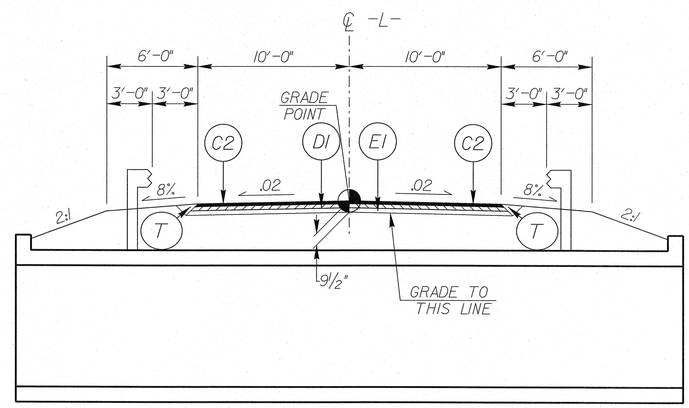

TYPICAL SECTION No. 3

USE TYPICAL SECTION No. 3 AS FOLLOWS:
FROM -L- STA. 13+31.17 (BEGIN CULVERT) TO -L- STA. 13+68.19 (END CULVERT)

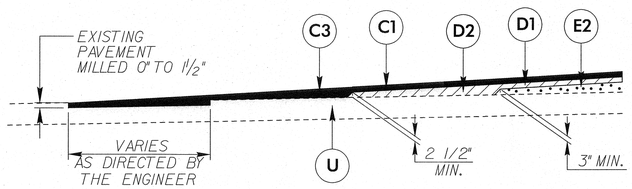

MILLING DETAIL FOR PROFILE CONNECTIONS

TYING PROPOSED PAVEMENTS TO EXISTING PAVEMENTS

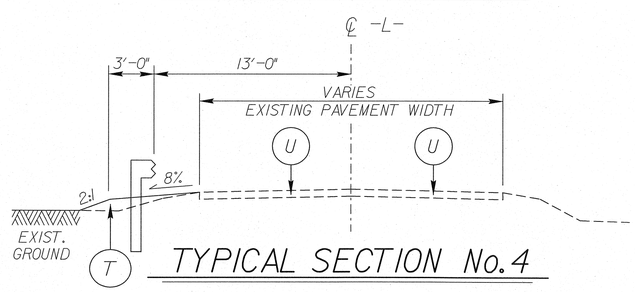

TYPICAL SECTION No. 4

USE TYPICAL SECTION No. 4 AS FOLLOWS:
FROM -L- STA. 14+20.00 TO -L- STA. 14+46.97 LT

6/2/99

9:48:59 AM
17BP.9.R.17_Rdy_typ.dgn
3/27/2014

12/06/07

STATE OF NORTH CAROLINA
DIVISION OF HIGHWAYS

LIST OF PIPES, ENDWALLS, ETC. (FOR PIPES 48" & UNDER)

STATION / SIZE	LOCATION (LT,RT, OR CL)	STRUCTURE NO. FROM	STRUCTURE NO. TO	TOP ELEVATION	INVERT ELEVATION	INVERT ELEVATION	SLOPE CRITICAL	DRAINAGE PIPE (RCP, CSP, CAAP, HDPE, or PVC) 12"	15"	18"	24"	30"	36"	42"	48"	C.S. PIPE (UNLESS NOTED OTHRWISE) 12"	15"	18"	24"	24"	30"	30"	36"	36"	42"	42"	48"	48"	CLASS III R.C. PIPE (UNLESS OTHERWISE NOTED) 12"	15"	18"	24"	30"	36"	42"	48"
THICKNESS OR GAUGE																.064	.064	.064	.064		.079		.079		.109		.109									
12+80	RT																													40						
TOTALS																														40						

STATION	15" SIDE DRAIN PIPE	18" SIDE DRAIN PIPE	24" SIDE DRAIN PIPE	ENDWALLS STD. 838.01, STD. 838.11 OR STD. 838.80 (UNLESS NOTED OTHERWISE) CU. YDS. R.C.P.	C.S.P.	QUANTITIES FOR DRAINAGE STRUCTURES * TOTAL L.F. FOR PAY QUANTITY SHALL BE COL. 'A' + (1.3 X COL.'B') PER EACH (0' THRU 5.0')	LIN. *FT. A 5.0' THRU 10.0'	B 10.0' AND ABOVE	C.B. STD. 840.01 OR STD. 840.02	FRAME, GRATES AND HOOD STANDARD 840.03 TYPE OF GRATE E	F	G		D.I. STD. 840.14 OR STD. 840.15	D.I. FRAME & GRATE STD. 840.16	G.D.I. TYPE "A" STD. 840.17 OR 840.26	G.D.I. TYPE "B" STD. 840.18 OR 840.27	G.D.I. TYPE "D" STD. 840.19 OR 840.28	G.D.I. FRAME WITH GRATE STD. 840.22	G.D.I. FRAME WITH TWO GRATES STD. 840.22	G.D.I. (N.S.) FRAME WITH GRATE STD. 840.29	G.D.I. (N.S.) FRAME WITH TWO GRATES STD. 840.29	J.B. STD. 840.31 OR 840.32	T.B.D.I. STD. 840.35							CORR. STEEL ELBOWS NO. & SIZE	CONC. COLLARS CL. "B" C.Y. STD 840.72	CONC. & BRICK PIPE PLUG, C.Y. STD. 840.71	PIPE REMOVAL LIN.FT.	REMARKS
12+80																																			24 LF OF 12" RCP TO BE REMOVED
TOTALS																																			

ABBREVIATIONS

- C.B. CATCH BASIN
- N.D.I. NARROW DROP INLET
- D.I. DROP INLET
- G.D.I. GRATED DROP INLET
- G.D.I. (N.S.) GRATED DROP INLET (NARROW SLOT)
- J.B. JUNCTION BOX
- M.H. MANHOLE
- T.B.D.I. TRAFFIC BEARING DROP INLET
- T.B.J.B. TRAFFIC BEARING JUNCTION BOX

"N" = DISTANCE FROM EDGE OF LANE TO FACE OF GUARDRAIL.
TOTAL SHOULDER WIDTH = DISTANCE FROM EDGE OF TRAVEL LANE TO SHOULDER BREAK POINT.
FLARE LENGTH = DISTANCE FROM LAST SECTION OF PARALLEL GUARDRAIL TO END OF GUARDRAIL.
W = TOTAL WIDTH OF FLARE FROM BEGINNING OF TAPER TO END OF GUARDRAIL.
G = GATING IMPACT ATTENUATOR TYPE 350
NG = NON-GATING IMPACT ATTENUATOR TYPE 350

GUARDRAIL SUMMARY

SURVEY LINE	BEG. STA.	END STA.	LOCATION	LENGTH STRAIGHT	LENGTH SHOP CURVED	LENGTH DOUBLE FACED	WARRANT POINT APPROACH END	WARRANT POINT TRAILING END	"N" DIST. FROM E.O.L.	TOTAL SHOUL. WIDTH	FLARE LENGTH APPROACH END	FLARE LENGTH TRAILING END	W APPROACH END	W TRAILING END	ANCHORS XI MOD	XI	GRAU 350	M-350	III	CAT-1	VI MOD	BIC	AT-1	IMPACT ATTENUATOR TYPE 350 EA	G	NG	SINGLE FACED GUARDRAIL	REMOVE EXISTING GUARDRAIL	REMOVE AND STOCKPILE EXISTING GUARDRAIL	REMARKS
-L-	13+00.00	14+46.97	LT.	106.80'	56.25'		CULVERT HEADWALL		3'-0"	6'-0"													2							
-L-	13+00.00	14+00.00	RT.	63'	56.25'				3'-0"	6'-0"													2							
	LESS ANCHOR	DEDUCTIONS																												
	TYPE 350	1 @ 50.00'	=																											
	TYPE AT-1	4 @ 6.25'	=		25'																									
			TOTAL	169.80'	87.50'																		4							
			SAY	175.00'	87.50'																		4							

SUMMARY OF EARTHWORK

STATION	STATION	UNCL. EXCAV.	EMBANK. +%	BORROW	WASTE
12+70.00	14+46.97	9	146	138	
SUBTOTALS:		9	146	138	
WASTE TO REPLACE BORROW		–	–	–	
PROJECT TOTALS:		9	146	138	
SAY:		10		150	

NOTE:

1) APPROXIMATE QUANTITIES ONLY. UNCLASSIFIED EXCAVATION, BORROW EXCAVATION, SHOULDER BORROW, FINE GRADING, CLEARING AND GRUBBING, BREAKING OF EXISTING PAVEMENT, AND REMOVAL OF EXISTING PAVEMENT WILL BE PAID FOR AT THE CONTRACT LUMP SUM PRICE FOR "GRADING."

2) EARTHWORK QUANTITIES EXCLUDE VOLUMES FOR "UNCLASSIFIED CULVERT EXCAVATION".

PAVEMENT REMOVAL SUMMARY

SURVEY LINE	STATION	STATION	LOCATION LT/RT/CL	YD^2
-L-	13+20.00	13+31.72	CL	21.2
-L-	13+61.87	13+71.36	CL	17.3
			TOTAL:	38.5
			SAY:	40

1:13:30 PM
17BP.9.R.17_Rdy_sum_3.dgn
3/28/2014

PROJECT REFERENCE NO.	SHEET NO.
17BP.9.R.17	4
R/W SHEET NO.	
ROADWAY DESIGN ENGINEER	HYDRAULICS ENGINEER

NORTH CAROLINA PROFESSIONAL SEAL 032400 ENGINEER DAVID Z. KEISER 3-27-2014

NORTH CAROLINA PROFESSIONAL SEAL 032312 ENGINEER CHARLES W. HEARPE 3-27-14

PLANS PREPARED BY:
PARSONS BRINCKERHOFF
434 FAYETTEVILLE STREET
SUITE 1500
RALEIGH, NC 27601
LICENSE NO. F-0105

CURVE DATA

PI Sta 11+40.25	PI Sta 15+25.01
△ = 12° 42' 08.8" (LT)	△ = 0° 59' 23.7" (RT)
D = 4° 32' 50.2"	D = 1° 07' 12.6"
L = 279.34'	L = 88.37'
T = 140.25'	T = 44.19'
R = 1,260.00'	R = 5,115.00'

DAVIDSON COUNTY
LOW IMPACT BRIDGE

STRUCTURE 280079
LS 09-11-103
WBS 17BP.9.R.17
TIP 17BP.9.R.17

NC GRID
NAD 83/NSRS 2007

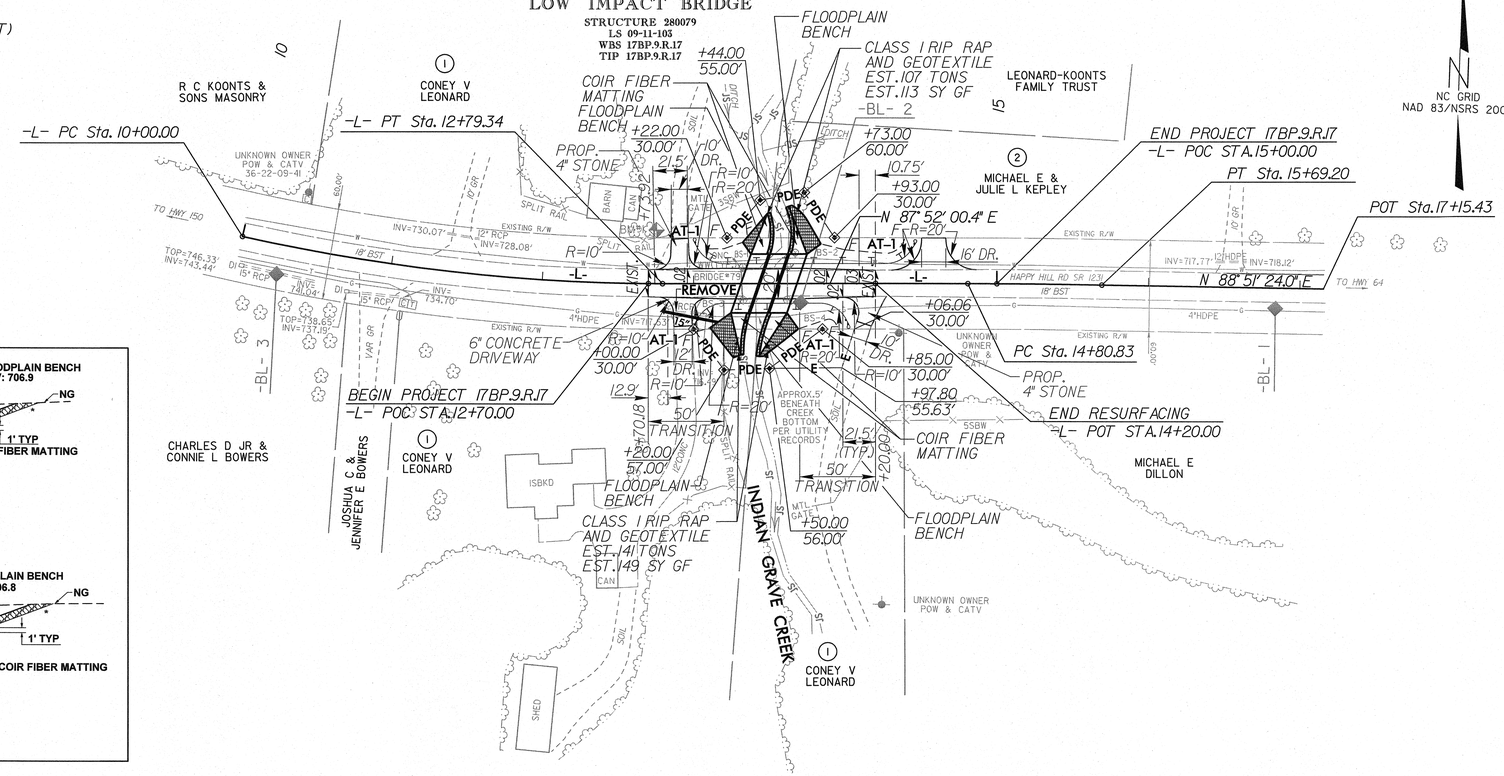

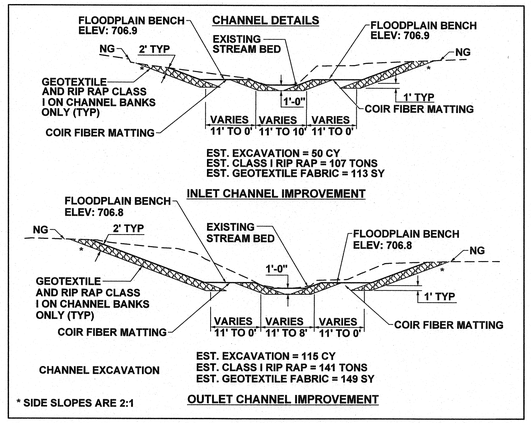

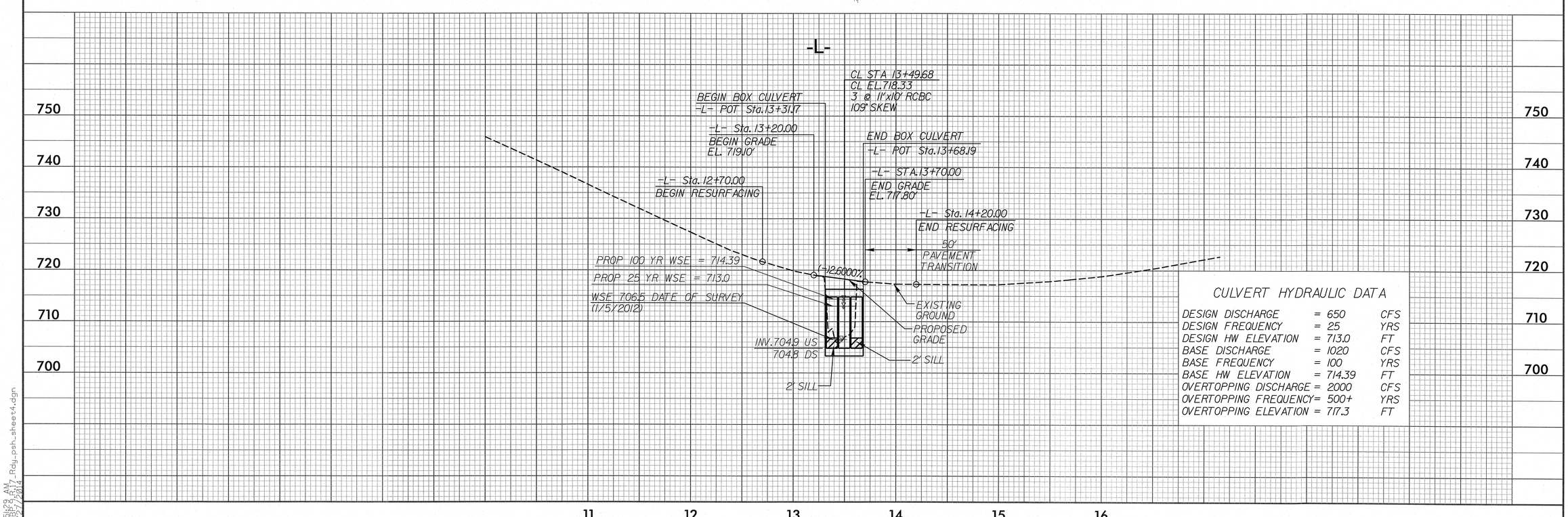

CULVERT HYDRAULIC DATA

DESIGN DISCHARGE	= 650	CFS
DESIGN FREQUENCY	= 25	YRS
DESIGN HW ELEVATION	= 713.0	FT
BASE DISCHARGE	= 1020	CFS
BASE FREQUENCY	= 100	YRS
BASE HW ELEVATION	= 714.39	FT
OVERTOPPING DISCHARGE	= 2000	CFS
OVERTOPPING FREQUENCY	= 500+	YRS
OVERTOPPING ELEVATION	= 717.3	FT

8/17/99

95L29 AM
17BP.9.R.17_Rdy_psh_sheet4.dgn
3/27/2014

STATE OF NORTH CAROLINA
DIVISION OF HIGHWAYS

STATE PROJECT REFERENCE NO.	SHEET NO.
17BP.9.R.17	TCP-1

PLAN FOR PROPOSED TRAFFIC CONTROL, MARKING & DELINEATION

DAVIDSON COUNTY

ROADWAY STANDARD DRAWINGS

THE FOLLOWING ROADWAY STANDARDS AS APPEAR IN "ROADWAY STANDARD DRAWINGS" - PROJECT SERVICES UNIT - N.C. DEPARTMENT OF TRANSPORTATION - RALEIGH, N.C., DATED JULY 2012 ARE APPLICABLE TO THIS PROJECT AND BY REFERENCE HEREBY ARE CONSIDERED A PART OF THESE PLANS:

STD. NO.	TITLE
1101.03	TEMPORARY ROAD CLOSURES
1101.11	TRAFFIC CONTROL DESIGN TABLES
1110.01	STATIONARY WORK ZONE SIGNS
1145.01	BARRICADES
1205.01	PAVEMENT MARKINGS - LINE TYPES & OFFSETS
1205.02	PAVEMENT MARKINGS - 2 LANE & MULTILANE ROADWAYS
1261.01	GUARDRAIL & BARRIER DELINEATOR SPACING
1261.02	GUARDRAIL & BARRIER DELINEATOR TYPE
1262.01	GUARDRAIL END DELINEATION

INDEX OF SHEETS

SHEET NO.	TITLE
TCP-1	LIST OF APPLICABLE ROADWAY STANDARD DRAWINGS, LEGEND AND INDEX OF SHEETS
TCP-2	GENERAL NOTES, PHASING AND DETOUR SIGNING

LEGEND

GENERAL

- DIRECTION OF TRAFFIC FLOW
- NORTH ARROW
- PROPOSED PVMT. --------- EXIST. PVMT.
- WORK AREA
- MILL AND WEDGE
- REMOVAL OF EXISTING PAVEMENT

TRAFFIC CONTROL DEVICES

- TYPE I BARRICADE
- TYPE II BARRICADE
- TYPE III BARRICADE
- CONE
- DRUM
- SKINNY DRUM
- FLASHING ARROW PANEL (TYPE C)
- STATIONARY SIGN
- PORTABLE SIGN
- STATIONARY OR PORTABLE SIGN
- CRASH CUSHION
- CHANGEABLE MESSAGE SIGN
- TRUCK MOUNTED IMPACT ATTENUATOR (TMIA)
- POLICE
- FLAGGER

PAVEMENT MARKINGS

- CRYSTAL/CRYSTAL PAVEMENT MARKER
- YELLOW/YELLOW PAVEMENT MARKER
- CRYSTAL/RED PAVEMENT MARKER
- PAVEMENT MARKING SYMBOLS

APPROVED: _____

DATE: _____

SEAL

NORTH CAROLINA PROFESSIONAL SEAL 033400 ENGINEER DAVID Z. KEISER
3-27-2014

PARSONS BRINCKERHOFF
434 FAYETTEVILLE STREET
SUITE 1500
RALEIGH, NC 27601
LICENSE NO. F-0165

DAVID KEISER, PE — PROJECT ENGINEER
ERIC MISAK — PROJECT DESIGN

PROJECT: 17BP.9.R.17

10:06:28 AM
17BP.9.R.17_TC_TCP_TSH.dgn
3/27/2014

PROJ. REFERENCE NO.	SHEET NO.
17BP.9.R.17	TCP-2

PARSONS BRINCKERHOFF
434 FAYETTEVILLE STREET
SUITE 1500
RALEIGH, NC 27601
LICENSE NO. F-0165

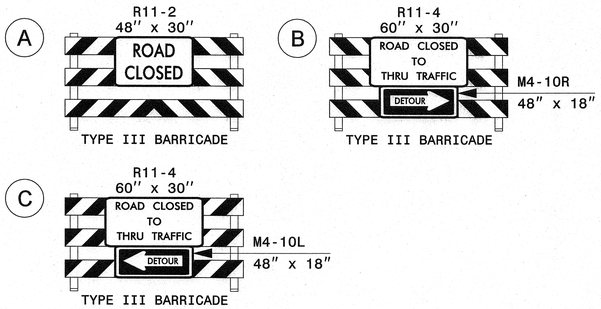

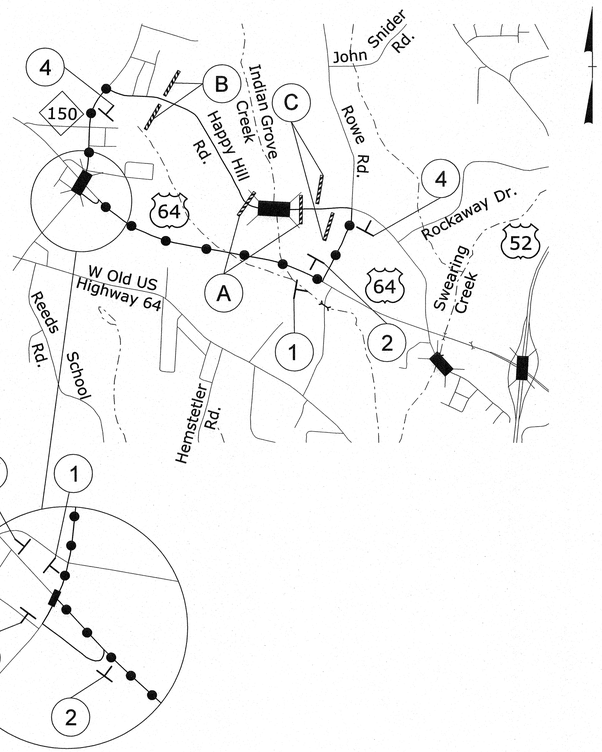

GENERAL NOTES

CHANGES MAY BE REQUIRED WHEN PHYSICAL DIMENSIONS IN THE DETAIL DRAWINGS, STANDARD DETAILS, AND ROADWAY DETAILS ARE NOT ATTAINABLE TO MEET FIELD CONDITIONS OR RESULT IN DUPLICATE OR UNDESIRED OVERLAPPING OF DEVICES. MODIFICATION MAY INCLUDE: MOVING, SUPPLEMENTING, COVERING, OR REMOVAL OF DEVICES AS DIRECTED BY THE ENGINEER.

THE FOLLOWING GENERAL NOTES APPLY AT ALL TIMES FOR THE DURATION OF THE CONSTRUCTION PROJECT EXCEPT WHEN OTHERWISE NOTED IN THE PLAN OR DIRECTED BY THE ENGINEER.

LANE AND SHOULDER CLOSURE REQUIREMENTS

A) REMOVE LANE CLOSURE DEVICES FROM THE LANE WHEN WORK IS NOT BEING PERFORMED BEHIND THE LANE CLOSURE OR WHEN A LANE CLOSURE IS NO LONGER NEEDED OR AS DIRECTED BY THE ENGINEER.

B) WHEN PERSONNEL AND/OR EQUIPMENT ARE WORKING WITHIN 15 FT OF AN OPEN TRAVEL LANE, CLOSE THE NEAREST OPEN SHOULDER USING ROADWAY STANDARD DRAWING NO. 1101.04 UNLESS THE WORK AREA IS PROTECTED BY BARRIER OR GUARDRAIL OR A LANE CLOSURE IS INSTALLED.

TRAFFIC PATTERN ALTERATIONS

C) NOTIFY THE ENGINEER TWENTY ONE (21) CALENDAR DAYS PRIOR TO ANY TRAFFIC PATTERN ALTERATION.

SIGNING

D) INSTALL ADVANCE WORK ZONE WARNING SIGNS WHEN WORK IS WITHIN 40 FT FROM THE EDGE OF TRAVEL LANE AND NO MORE THAN THREE (3) DAYS PRIOR TO THE BEGINNING OF CONSTRUCTION.

E) PROVIDE SIGNING AND DEVICES REQUIRED TO CLOSE THE ROAD ACCORDING TO THE ROADWAY STANDARD DRAWINGS AND TRAFFIC CONTROL PLANS.

PROVIDE SIGNING REQUIRED FOR THE OFF-SITE DETOUR ROUTE AS SHOWN ON THIS SHEET.

F) COVER OR REMOVE ALL SIGNS AND DEVICES REQUIRED TO CLOSE THE ROAD WHEN ROAD CLOSURE IS NOT IN OPERATION.

COVER OR REMOVE ALL SIGNS REQUIRED FOR THE OFF-SITE DETOUR WHEN THE DETOUR IS NOT IN OPERATION.

G) ENSURE ALL NECESSARY SIGNING IS IN PLACE PRIOR TO ALTERING ANY TRAFFIC PATTERN.

TRAFFIC CONTROL DEVICES

H) PLACE TYPE III BARRICADES, WITH "ROAD CLOSED" SIGN R11-2 ATTACHED, OF SUFFICIENT LENGTH TO CLOSE ENTIRE ROADWAY.

PAVEMENT MARKINGS AND MARKERS

I) INSTALL PAVEMENT MARKINGS ON THE FINAL SURFACE AS FOLLOWS:

ROAD NAME	MARKING
SR 1231 (HAPPY HILL ROAD)	PAINT

J) TIE PROPOSED PAVEMENT MARKING LINES TO EXISTING PAVEMENT MARKING LINES.

K) REMOVE/REPLACE ANY CONFLICTING/DAMAGED PAVEMENT MARKINGS.

L) PASSING ZONE WILL BE DETERMINED IN THE FIELD AND MUST BE APPROVED BY THE ENGINEER.

PHASING

PHASE I

PRIOR TO ANY CONSTRUCTION OPERATIONS, PLACE AND COVER OFF-SITE DETOUR SIGNING AS SHOWN ON TCP-2 AND IN ACCORDANCE WITH RSD 1101.03 (SHEET 1 OF 9).

PHASE II

USING OFF-SITE DETOUR, UNCOVER DETOUR SIGNS, CLOSE -L- (SR 1231 / HAPPY HILL ROAD) TO TRAFFIC, AND EXCAVATE AND CONSTRUCT NEW CULVERT AND ROADWAY UP TO AND INCLUDING FINAL LAYER OF SURFACE COURSE.

PHASE III

UPON COMPLETION OF CULVERT AND ROADWAY, PLACE FINAL PAVEMENT MARKING IN ACCORDANCE WITH RSD 1205.01. REMOVE BARRICADES AND DETOUR SIGNS AND OPEN -L- (SR 1231 / HAPPY HILL ROAD) TO TRAFFIC.

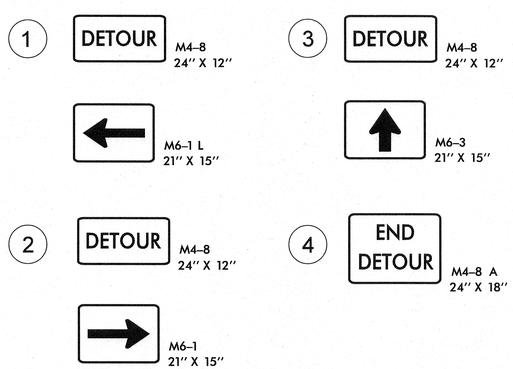

PROPOSED DETOUR	
DETOUR ROUTE	
DETOUR LENGTH	2.5 MILES

APPROVED:_____ DATE:_____

SEAL

NORTH CAROLINA PROFESSIONAL SEAL 033400 ENGINEER DAVID Z. KEISER
3-27-2014

GENERAL NOTES, PHASING AND DETOUR SIGNING

SCALE:	NONE
DATE:	09/05/12
DWG. BY:	RGK
DESIGN BY:	EDM
REVIEWED BY:	DZK

REVISIONS

CADD FILE

10:25:48 AM
17BP.9.R.17_TC_TCP_Sheet2.dgn
3/27/2014

EROSION CONTROL PLAN

PROJECT REFERENCE NO.	SHEET NO.
17BP.9.R.17	EC-1
R/W SHEET NO.	

PLANS PREPARED BY:
PARSONS BRINCKERHOFF
434 FAYETTEVILLE STREET
SUITE 1500
RALEIGH, NC 27601
LICENSE NO. F-0165

ROADSIDE ENVIRONMENTAL UNIT
DEPARTMENT OF TRANSPORTATION
DIVISION OF HIGHWAYS
RALEIGH, N.C.

2012 STANDARD SPECIFICATIONS

THESE EROSION AND SEDIMENT CONTROL PLANS COMPLY WITH THE REGULATIONS SET FORTH BY THE NCG-010000 GENERAL CONSTRUCTION PERMIT EFFECTIVE AUGUST 3, 2011 ISSUED BY THE NORTH CAROLINA DEPARTMENT OF ENVIRONMENT AND NATURAL RESOURCES DIVISION OF WATER QUALITY.

NOTES: ANY DEVIATION FROM OPTIONS GIVEN WILL REQUIRE PRIOR APPROVAL BY ENGINEER.

ADDITIONAL EROSION CONTROL DEVICES MAY NEED TO BE INSTALLED AS DIRECTED BY THE ENGINEER.

CHARLES HEAFNER
LEVEL III NAME

3440
LEVEL III CERTIFICATION NO.

CLEARING AND GRUBBING EROSION CONTROL FOR CONSTRUCTION SHEET 4

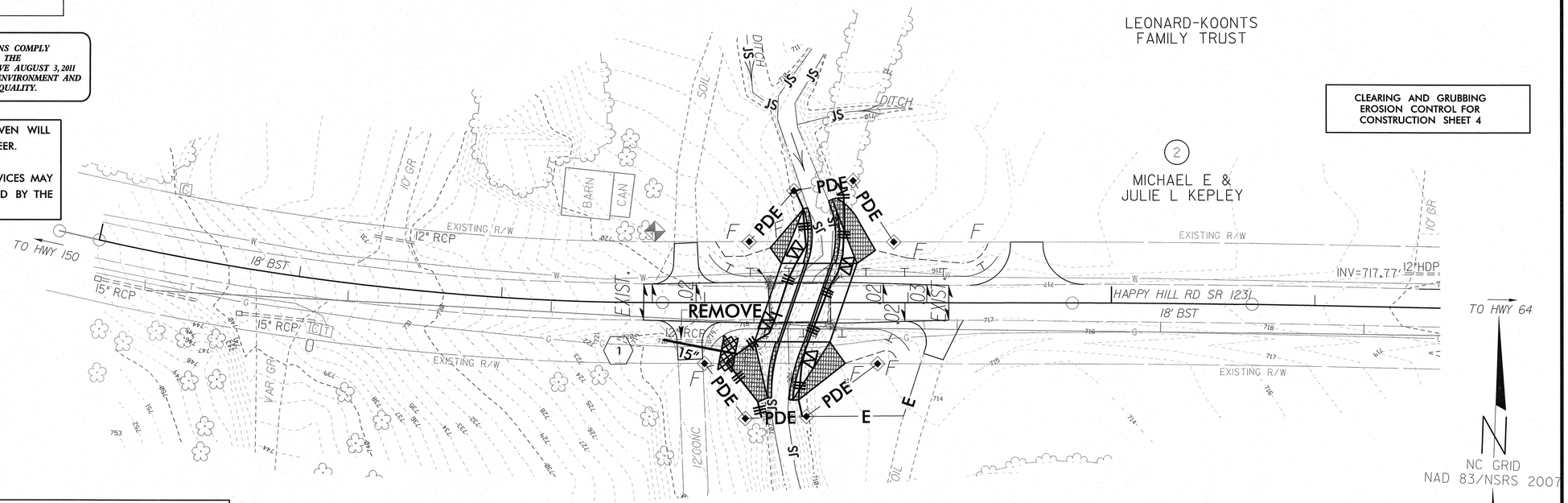

2012 STANDARD DRAWINGS

1604.01	Railroad Erosion Control Detail	1632.01	Rock Inlet Sediment Trap Type A
1605.01	Temporary Silt Fence	1632.02	Rock Inlet Sediment Trap Type B
1606.01	Special Sediment Control Fence	1632.03	Rock Inlet Sediment Trap Type C
1607.01	Gravel Construction Entrance	1633.01	Temporary Rock Silt Check Type A
1622.01	Temporary Berms and Slope Drains	1633.02	Temporary Rock Silt Check Type B
1630.01	Riser Basin	1634.01	Temporary Rock Sediment Dam Type A
1630.02	Silt Basin Type B	1634.02	Temporary Rock Sediment Dam Type B
1630.03	Temporary Silt Ditch	1635.01	Rock Pipe Inlet Sediment Trap Type A
1630.04	Stilling Basin	1635.02	Rock Pipe Inlet Sediment Trap Type B
1630.05	Temporary Diversion	1640.01	Coir Fiber Baffle
1630.06	Special Stilling Basin	1645.01	Temporary Stream Crossing
1631.01	Matting Installation		

Std. #	Description	Symbol
1605.01	Temporary Silt Fence	
1606.01	Special Sediment Control Fence	
1622.01	Temporary Berms and Slope Drains	
1630.02	Silt Basin Type B	
1630.03	Temporary Silt Ditch	TSD
1630.05	Temporary Diversion	TD
1630.06	Special Stilling Basin	
1632.03	Rock Inlet Sediment Trap Type C	
1633.01	Temporary Rock Silt Check Type-A	
	Temporary Rock Silt Check Type-A with Matting and Polyacrylamide (PAM)	
1633.02	Temporary Rock Silt Check Type-B	
	Wattle	
	Wattle with Polyacrylamide (PAM)	
1634.02	Temporary Rock Sediment Dam Type-B	
1635.01	Rock Pipe Inlet Sediment Trap Type-A	

CONSTRUCTION SEQUENCE - PHASE I

1. INSTALL PHASE I STILLING BASIN
2. PLACE PHASE I IMPERVIOUS DIKES
3. MAINTAIN CHANNEL FLOW THROUGH EXISTING STREAM
4. CONSTRUCT UPSTREAM AND DOWN STREAM PORTIONS OF EAST BARREL, WINGWALLS, AND CHANNEL IMPROVEMENTS
5. REMOVE PHASE I IMPERVIOUS DIKES

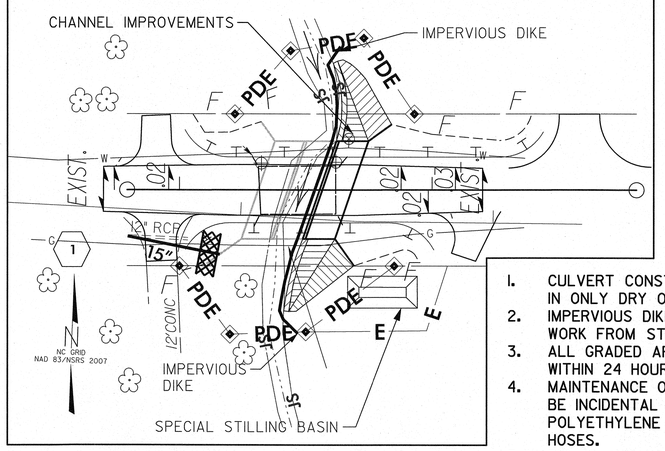

CULVERT CONSTRUCTION SEQUENCE – PHASE I

CONSTRUCTION SEQUENCE - PHASE II

1. PLACE PHASE II IMPERVIOUS DIKES
2. DIVERT CHANNEL FLOW THROUGH EAST BARREL
3. CONSTRUCT UPSTREAM AND DOWN STREAM PORTIONS OF CENTER AND WEST BARRELS, WINGWALLS, AND CHANNEL IMPROVEMENTS
4. REMOVE SPECIAL STILLING BASIN
5. REMOVE PHASE II IMPERVIOUS DIKES

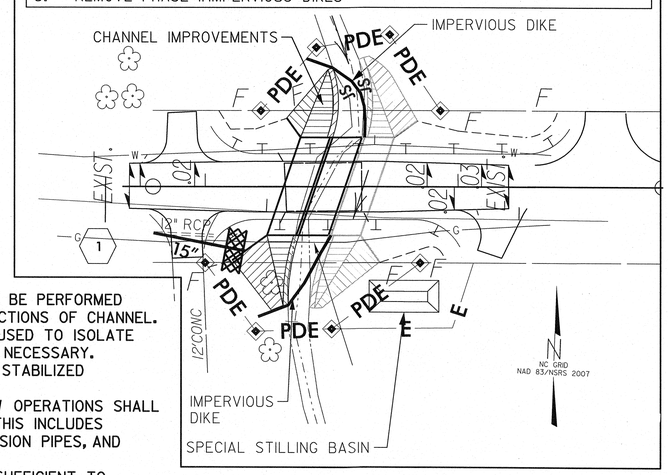

CULVERT CONSTRUCTION SEQUENCE – PHASE II

NOTES

1. CULVERT CONSTRUCTION SHALL BE PERFORMED IN ONLY DRY OR ISOLATION SECTIONS OF CHANNEL.
2. IMPERVIOUS DIKES ARE TO BE USED TO ISOLATE WORK FROM STREAM FLOW AS NECESSARY.
3. ALL GRADED AREAS SHALL BE STABILIZED WITHIN 24 HOURS.
4. MAINTENANCE OF STREAM FLOW OPERATIONS SHALL BE INCIDENTAL TO THE WORK. THIS INCLUDES POLYETHYLENE SHEETING, DIVERSION PIPES, AND HOSES.
5. PUMPS AND HOSES SHALL BE SUFFICIENT TO DEWATER THE WORK AREA.
6. THE CONTRACTOR SHALL NOT PUMP SEDIMENT-LADEN WATER DIRECTLY INTO STREAM. FOR DE-WATERING OF CULVERT SITES, THE CONTRACTOR SHALL FILTER SEDIMENT-LADEN WATER THROUGH SPECIAL SEDIMENT BASIN.

Scale 1" = 30'
30' 0 30' 60'

5/14/99

$$$$$$SYSTIME$$$$
$$$$$$CLIENT$$$$
$$$$$$DGN$$$$$$$$$$$$$$$$$$$$

5/14/99

PROJECT REFERENCE NO.	SHEET NO.
17BP.9.R.17	EC-2
R/W SHEET NO.	

PLANS PREPARED BY:
PARSONS BRINCKERHOFF
434 FAYETTEVILLE STREET
SUITE 1500
RALEIGH, NC 27601
LICENSE NO. F-0165

ROADSIDE ENVIRONMENTAL UNIT
DEPARTMENT OF TRANSPORTATION
DIVISION OF HIGHWAYS
RALEIGH, N.C.

2012 STANDARD SPECIFICATIONS

EROSION CONTROL PLAN

THESE EROSION AND SEDIMENT CONTROL PLANS COMPLY WITH THE REGULATIONS SET FORTH BY THE NCG-010000 GENERAL CONSTRUCTION PERMIT EFFECTIVE AUGUST 3, 2011 ISSUED BY THE NORTH CAROLINA DEPARTMENT OF ENVIRONMENT AND NATURAL RESOURCES DIVISION OF WATER QUALITY.

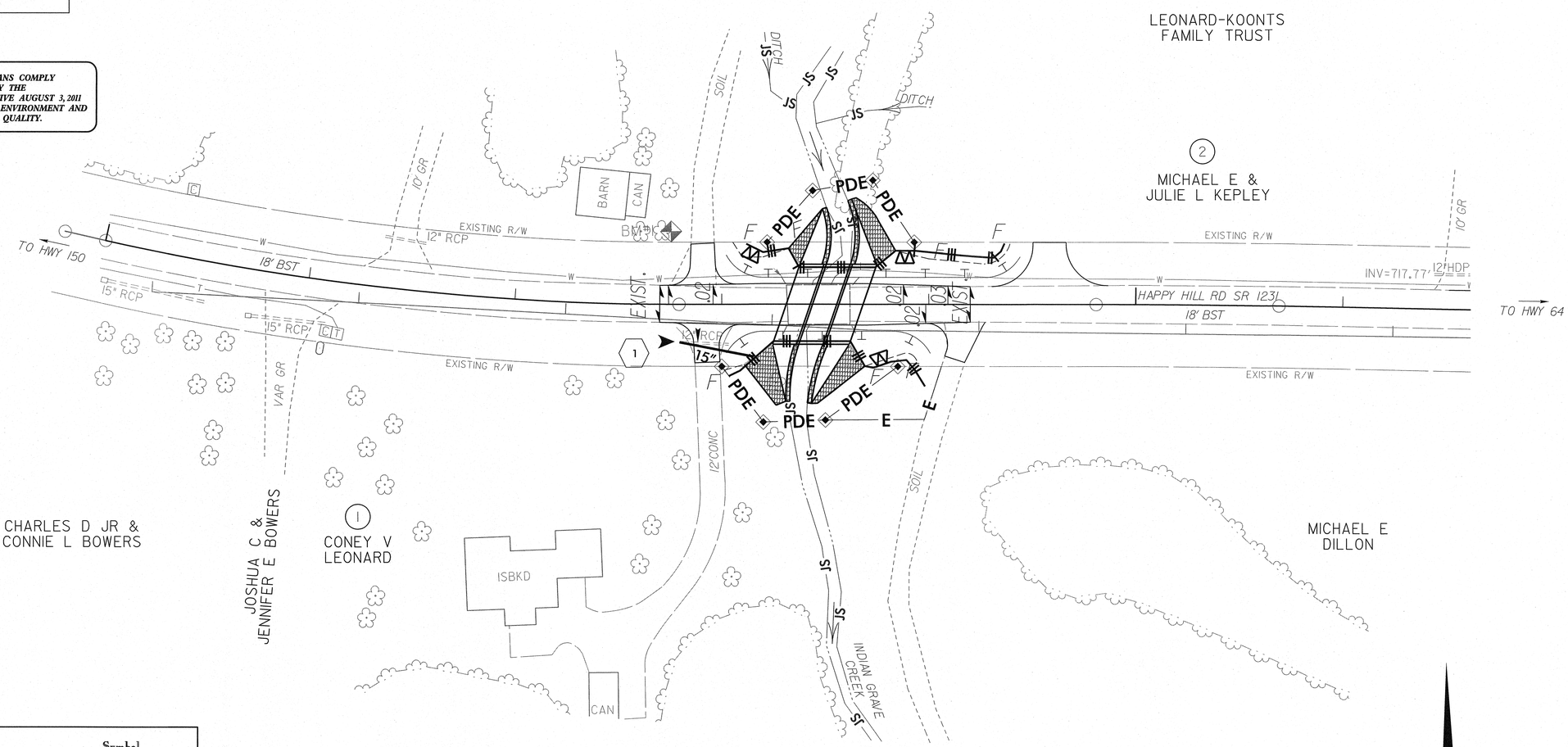

Std. #	Description	Symbol
1605.01	Temporary Silt Fence	
1606.01	Special Sediment Control Fence	
1622.01	Temporary Berms and Slope Drains	
1630.02	Silt Basin Type B	
1630.03	Temporary Silt Ditch	TSD
1630.05	Temporary Diversion	TD
1630.06	Special Stilling Basin	
1632.03	Rock Inlet Sediment Trap Type C	
1633.01	Temporary Rock Silt Check Type-A	
	Temporary Rock Silt Check Type-A with Matting and Polyacrylamide (PAM)	
1633.02	Temporary Rock Silt Check Type-B	
	Wattle	
	Wattle with Polyacrylamide (PAM)	
1634.02	Temporary Rock Sediment Dam Type-B	
1635.01	Rock Pipe Inlet Sediment Trap Type-A	

CHARLES HEAFNER
LEVEL III NAME

3440
LEVEL III CERTIFICATION NO.

2012 STANDARD DRAWINGS

1604.01	Railroad Erosion Control Detail	1632.01	Rock Inlet Sediment Trap Type A
1605.01	Temporary Silt Fence	1632.02	Rock Inlet Sediment Trap Type B
1606.01	Special Sediment Control Fence	1632.03	Rock Inlet Sediment Trap Type C
1607.01	Gravel Construction Entrance	1633.01	Temporary Rock Silt Check Type A
1622.01	Temporary Berms and Slope Drains		
1630.01	Riser Basin	1634.01	Temporary Rock Sediment Dam Type A
1630.02	Silt Basin Type B	1634.02	Temporary Rock Sediment Dam Type B
1630.03	Temporary Silt Ditch	1635.01	Rock Pipe Inlet Sediment Trap Type A
1630.04	Stilling Basin	1635.02	Rock Pipe Inlet Sediment Trap Type B
1630.05	Temporary Diversion	1640.01	Coir Fiber Baffle
1630.06	Special Stilling Basin	1645.01	Temporary Stream Crossing
1631.01	Matting Installation		

NC GRID
NAD 83/NSRS 2007

NOTES: ANY DEVIATION FROM OPTIONS GIVEN WILL REQUIRE PRIOR APPROVAL BY ENGINEER.

ADDITIONAL EROSION CONTROL DEVICES MAY NEED TO BE INSTALLED AS DIRECTED BY THE ENGINEER.

Scale 1" = 30'
30' 0 30' 60'

$$$$SYSTIME$$$$
$$$$USERNAME$$$$

PROJECT REFERENCE NO.	SHEET NO.
17BP.9.R.17	EC-3

PLANS PREPARED BY:
PARSONS BRINCKERHOFF
434 FAYETTEVILLE STREET
SUITE 1500
RALEIGH, NC 27601
LICENSE NO. F-0165

DIVISION OF HIGHWAYS
STATE OF NORTH CAROLINA

SOIL STABILIZATION TIMEFRAMES

SITE DESCRIPTION	STABILIZATION TIME	TIMEFRAME EXCEPTIONS
PERIMETER DIKES, SWALES, DITCHES AND SLOPES	7 DAYS	NONE
HIGH QUALITY WATER (HQW) ZONES	7 DAYS	NONE
SLOPES STEEPER THAN 3:1	7 DAYS	IF SLOPES ARE 10' OR LESS IN LENGTH AND ARE NOT STEEPER THAN 2:1, 14 DAYS ARE ALLOWED.
SLOPES 3:1 OR FLATTER	14 DAYS	7 DAYS FOR SLOPES GREATER THAN 50' IN LENGTH.
ALL OTHER AREAS WITH SLOPES FLATTER THAN 4:1	14 DAYS	NONE, EXCEPT FOR PERIMETERS AND HQW ZONES.

0 2.5 5	PROJ. REFERENCE NO.	SHEET NO.
	17BP.9.R.17	X-1

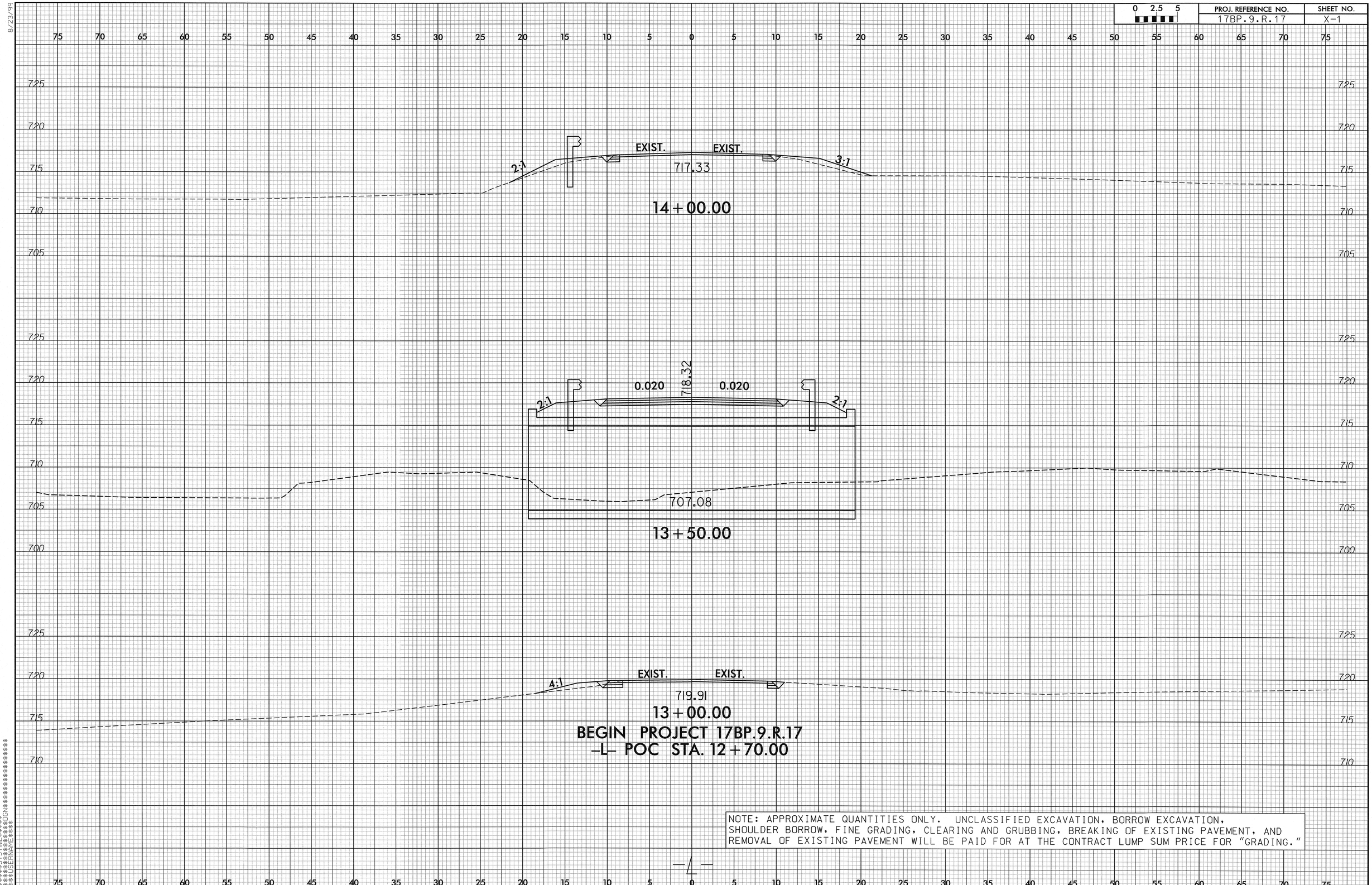

NOTE: APPROXIMATE QUANTITIES ONLY. UNCLASSIFIED EXCAVATION, BORROW EXCAVATION, SHOULDER BORROW, FINE GRADING, CLEARING AND GRUBBING, BREAKING OF EXISTING PAVEMENT, AND REMOVAL OF EXISTING PAVEMENT WILL BE PAID FOR AT THE CONTRACT LUMP SUM PRICE FOR "GRADING."

-L-

8/23/99

$$$$$SYSTIME$$$$
$$$$$SYSTIME$$$$
$$$$$DGN$$$$
$$$$$USERNAME$$$$

8/23/99

0 2.5 5	PROJ. REFERENCE NO.	SHEET NO.
	17BP.9.R.17	X-2

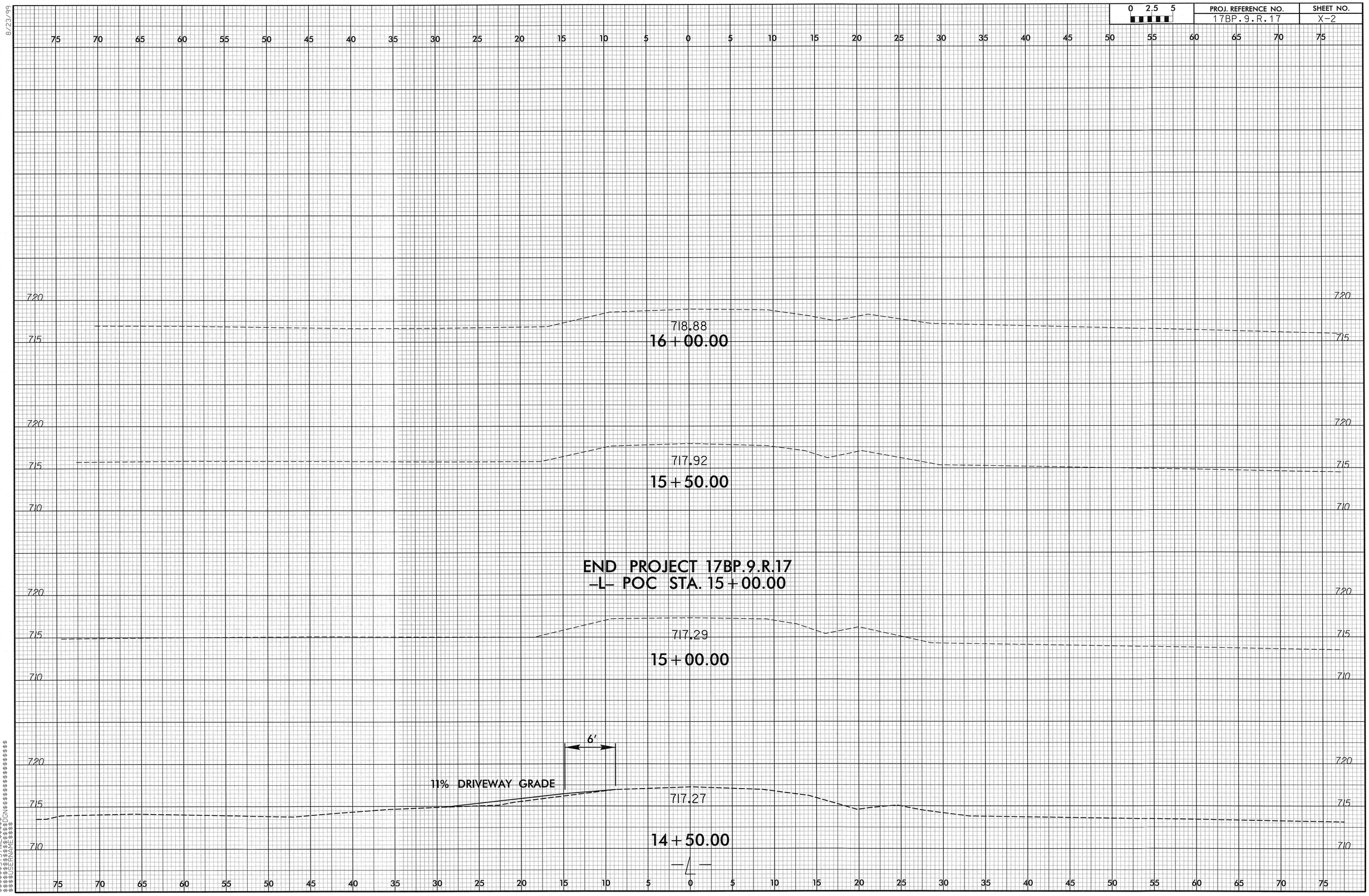

$$$$$$$$SYSTIME$$$$
$$$$$$$$DGNFILE$$$$

BENCH MARK #1: RAILROAD SPIKE IN NORTH EAST ROOT OF A 24"Ø OAK TREE, STA. 11+44.00-L- 35' LEFT, EL. 717.96

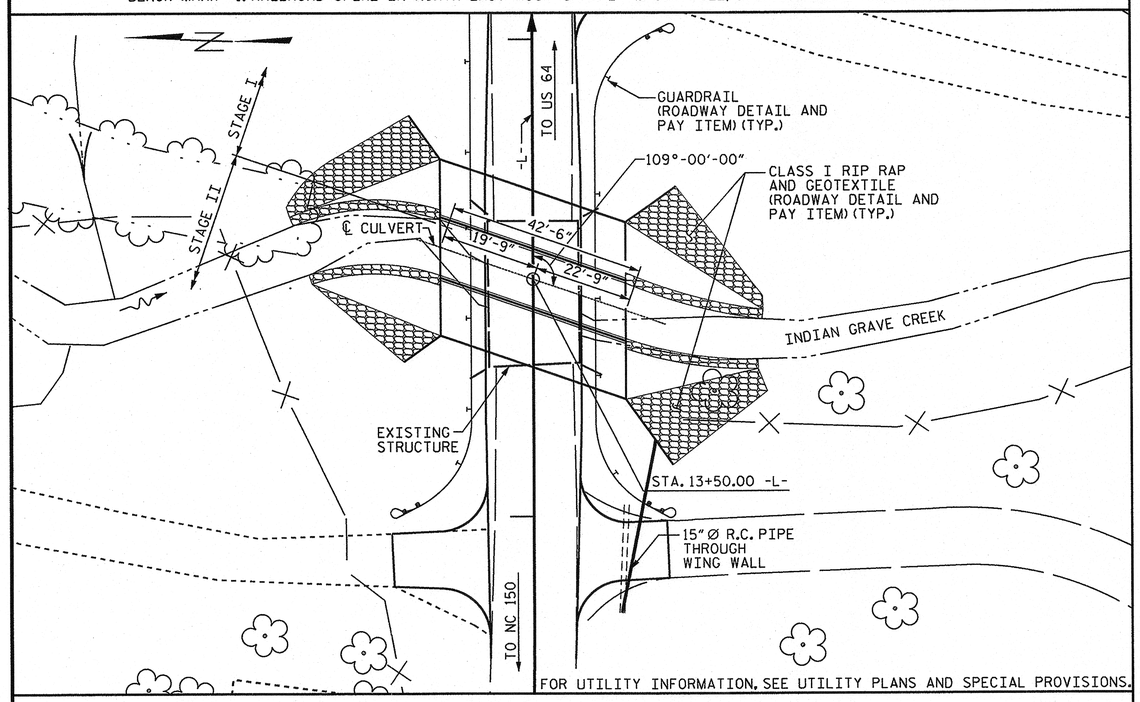

FOR UTILITY INFORMATION, SEE UTILITY PLANS AND SPECIAL PROVISIONS.

LOCATION SKETCH

ROADWAY DATA

GRADE PT. EL. @ STA. 13+50.00 -L-	=718.32
BED EL. @ STA. 13+50.00 -L-	=704.90
ROADWAY SLOPES	=2:1

HYDRAULIC DATA

DESIGN DISCHARGE	=650 C.F.S.
FREQUENCY OF DESIGN FLOOD	=25 YR.
DESIGN HIGH WATER ELEVATION	=713.00
DRAINAGE AREA	=1.6 SQ. MI.
BASE DISCHARGE (Q100)	=1020 C.F.S.
BASE HIGH WATER ELEVATION	=714.39

OVERTOPPING FLOOD DATA

OVERTOPPING DISCHARGE	=2000 C.F.S.
FREQUENCY OF OVERTOPPING FLOOD	=500+ YR.
OVERTOPPING HIGH WATER ELEVATION	=717.30

NOTES

ASSUMED LIVE LOAD ---------- HL-93 OR ALTERNATE LOADING.

DESIGN FILL---------- 3.93 FT. MAX

DESIGN FILL---------- 2.60 FT. MIN.

FOR OTHER DESIGN DATA AND NOTES SEE STANDARD NOTE SHEET.

3"Ø WEEP HOLES INDICATED TO BE IN ACCORDANCE WITH THE SPECIFICATIONS.

CONCRETE IN CULVERTS TO BE POURED IN THE FOLLOWING ORDER:

STAGE I: 1. WING FOOTINGS, FLOOR SLAB INCLUDING 4" OF ALL VERTICAL WALLS.
2. THE REMAINING PORTIONS OF THE WALLS, SILLS, WINGS FULL HEIGHT.

STAGE II: 1. WING FOOTINGS, FLOOR SLAB INCLUDING 4" OF ALL VERTICAL WALLS.
2. THE REMAINING PORTIONS OF THE WALLS, SILLS, WINGS FULL HEIGHT FOLLOWED BY ROOF SLAB AND HEADWALLS.

THE RESIDENT ENGINEER SHALL CHECK THE LENGTH OF CULVERT BEFORE STAKING IT OUT TO MAKE CERTAIN THAT IT WILL PROPERLY TAKE CARE OF THE FILL.

DIMENSIONS FOR WING LAYOUT AS WELL AS ADDITIONAL REINFORCING STEEL EMBEDDED IN BARREL ARE SHOWN ON WING SHEET.

AT THE CONTRACTOR'S OPTION, HE MAY SPLICE THE VERTICAL REINFORCING STEEL IN THE INTERIOR FACE OF EXTERIOR WALL AND BOTH FACES OF INTERIOR WALLS ABOVE LOWER WALL CONSTRUCTION JOINT. THE SPLICE LENGTH SHALL BE AS PROVIDED IN THE SPLICE LENGTH CHART SHOWN ON THE PLANS. EXTRA WEIGHT OF STEEL DUE TO THE SPLICES SHALL BE PAID FOR BY THE CONTRACTOR.

A 3 FOOT STRIP OF FILTER FABRIC SHALL BE ATTACHED TO THE FILL FACE OF THE WING COVERING THE ENTIRE LENGTH OF THE EXPANSION JOINT.

FOR CULVERT DIVERSION DETAILS AND PAY ITEM, SEE EROSION CONTROL PLANS.

FOR SUBMITTAL OF WORKING DRAWINGS, SEE SPECIAL PROVISIONS.

FOR FALSEWORK AND FORMWORK, SEE SPECIAL PROVISIONS.

FOR GROUT FOR STRUCTURES, SEE SPECIAL PROVISIONS.

FOR CRANE SAFETY, SEE SPECIAL PROVISIONS.

AT THE CONTRACTOR'S OPTION HE MAY SUBMIT, TO THE ENGINEER FOR APPROVAL, DESIGN AND DETAIL DRAWINGS FOR A PRECAST REINFORCED CONCRETE BOX CULVERT IN LIEU OF THE CAST-IN-PLACE CULVERT SHOWN ON THE PLANS. THE DESIGN SHALL PROVIDE THE SAME SIZE AND NUMBER OF BARRELS AS USED ON THE CAST-IN-PLACE DESIGN. FOR OPTIONAL PRECAST REINFORCED CONCRETE BOX CULVERT, SEE SPECIAL PROVISIONS.

REMOVAL OF THE EXISTING BRIDGE SHALL BE PERFORMED IN A MANNER THAT PREVENTS DEBRIS FROM FALLING INTO THE WATER. THE CONTRACTOR SHALL SUBMIT DEMOLITION PLANS FOR REVIEW AND REMOVE THE BRIDGE IN ACCORDANCE WITH ARTICLE 402-2 OF THE STANDARD SPECIFICATIONS.

THE EXISTING STRUCTURE CONSISTS OF 1 SPAN @ 30'-6", WITH 19'-2" CLEAR ROADWAY AND TIMBER DECK ON STEEL I-BEAMS AND DOUBLE CHANNELS ON MASS CONCRETE ABUTMENTS WITH STEEL SEATS AND LOCATED AT THE PROPOSED STRUCTURE SHALL BE REMOVED.

THE 15"Ø PIPE THROUGH THE WING WALL OF THE CULVERT SHALL BE LOCATED BY THE ENGINEER. THE REINFORCING STEEL SHALL BE FIELD BENT AS NECESSARY TO CLEAR THE PIPE.

TOTAL STRUCTURE QUANTITIES

	STAGE I	STAGE II	TOTAL
CLASS A CONCRETE			
BARREL @ 0.868 CY/FT (STAGE I) 2.829 CY/FT (STAGE II)	36.9 C.Y.	120.2 C.Y.	157.1 C.Y.
SILLS	1.7 C.Y.	1.7 C.Y.	3.4 C.Y.
WING ETC.	17.9 C.Y.	22.4 C.Y.	40.3 C.Y.
SUB TOTALS	56.5 C.Y.	144.3 C.Y.	200.8 C.Y.
REINFORCING STEEL			
BARREL	5792 LBS.	14550 LBS.	20342 LBS.
WINGS ETC.	1235 LBS.	1235 LBS.	2470 LBS.
SUB TOTALS	7027 LBS.	15785 LBS.	22812 LBS.
FOUNDATION CONDITIONING MATERIAL	40 TONS	67 TONS	107 TONS
CULVERT EXCAVATION			LUMP SUM
PLAIN RIP RAP CLASS I	46.8 TONS	71.3 TONS	118.1 TONS
REMOVAL OF EXISTING STRUCTURE			LUMP SUM

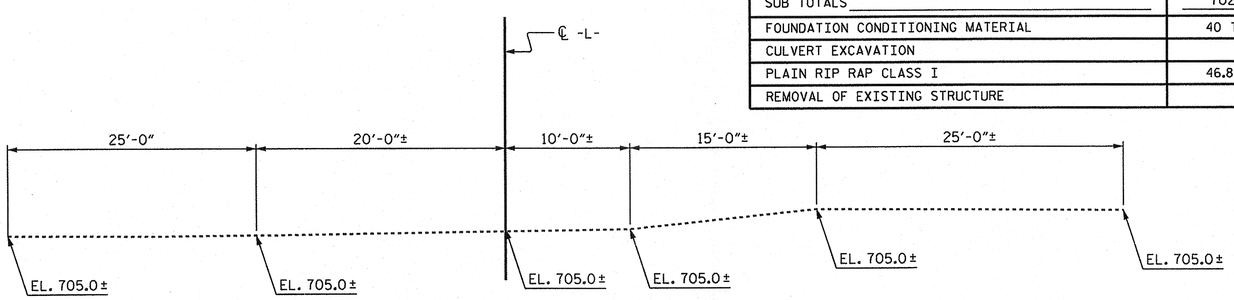

PROFILE ALONG ℄ CULVERT

PROJECT NO. 17BP.9.R.17

DAVIDSON COUNTY

STATION: 13+50.00 -L-

SHEET 1 OF 6 REPLACES BRIDGE NO. 79

STATE OF NORTH CAROLINA
DEPARTMENT OF TRANSPORTATION
RALEIGH

BARREL STANDARD

TRIPLE 11 FT. X 10 FT. CONCRETE BOX CULVERT 109° SKEW

AUGUST 1990

NORTH CAROLINA PROFESSIONAL SEAL 10730 ENGINEER D. ANDREW DAVENPORT, JR.

REVISIONS						SHEET NO.
NO.	BY:	DATE:	NO.	BY:	DATE:	C-1
1			3			TOTAL SHEETS
2			4			6

ASSEMBLED BY : D.A. DAVENPORT DATE : 08/22/13
CHECKED BY : R.P. PATEL DATE : 09/09/13

DESIGN ENGINEER OF RECORD: D.A. DAVENPORT DATE : 09/11/13

STD. NO. CB223A

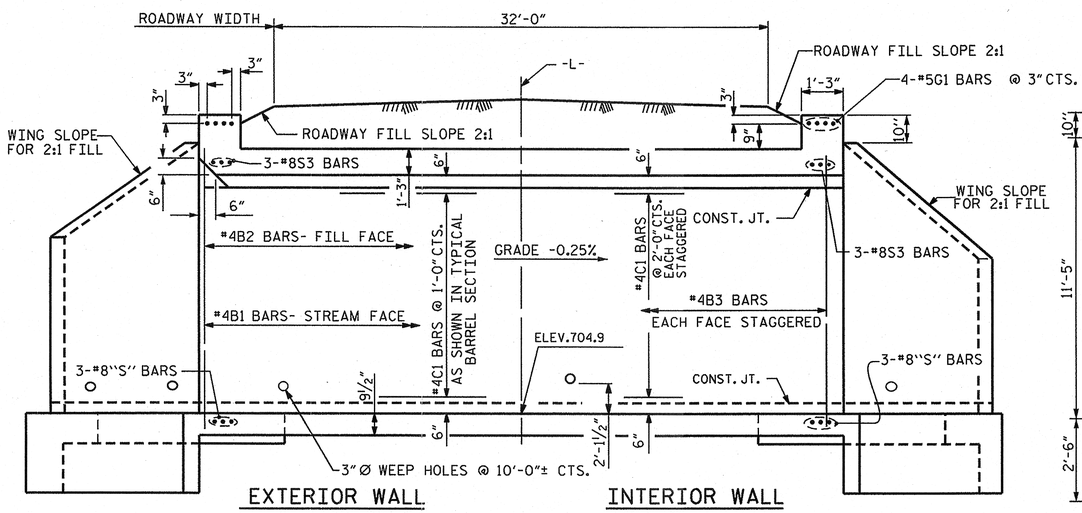

CULVERT SECTION NORMAL TO ROADWAY

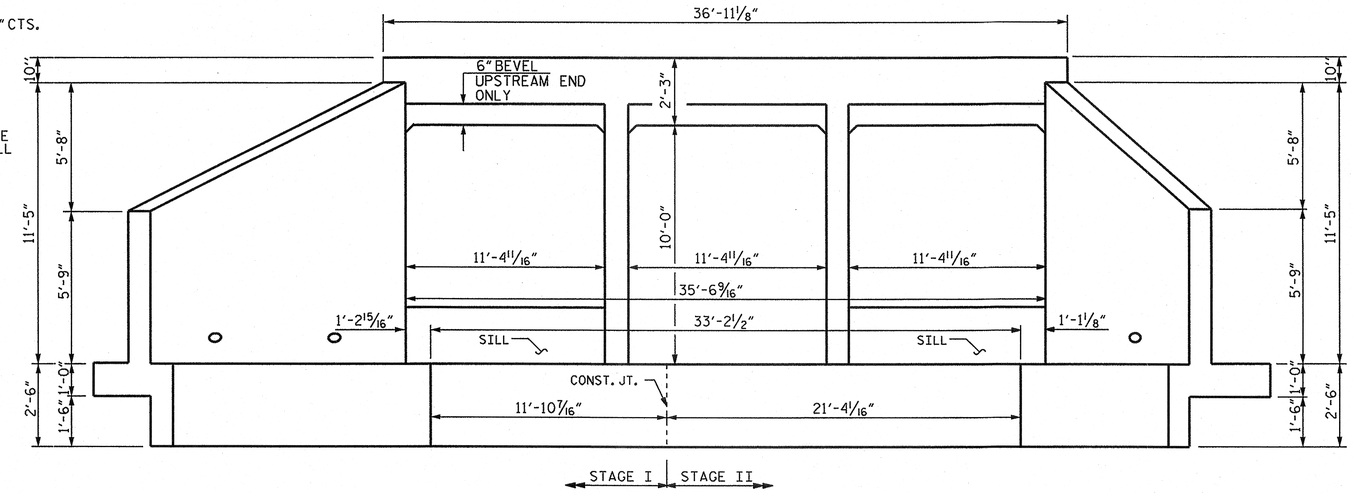

END ELEVATION NORMAL TO SKEW

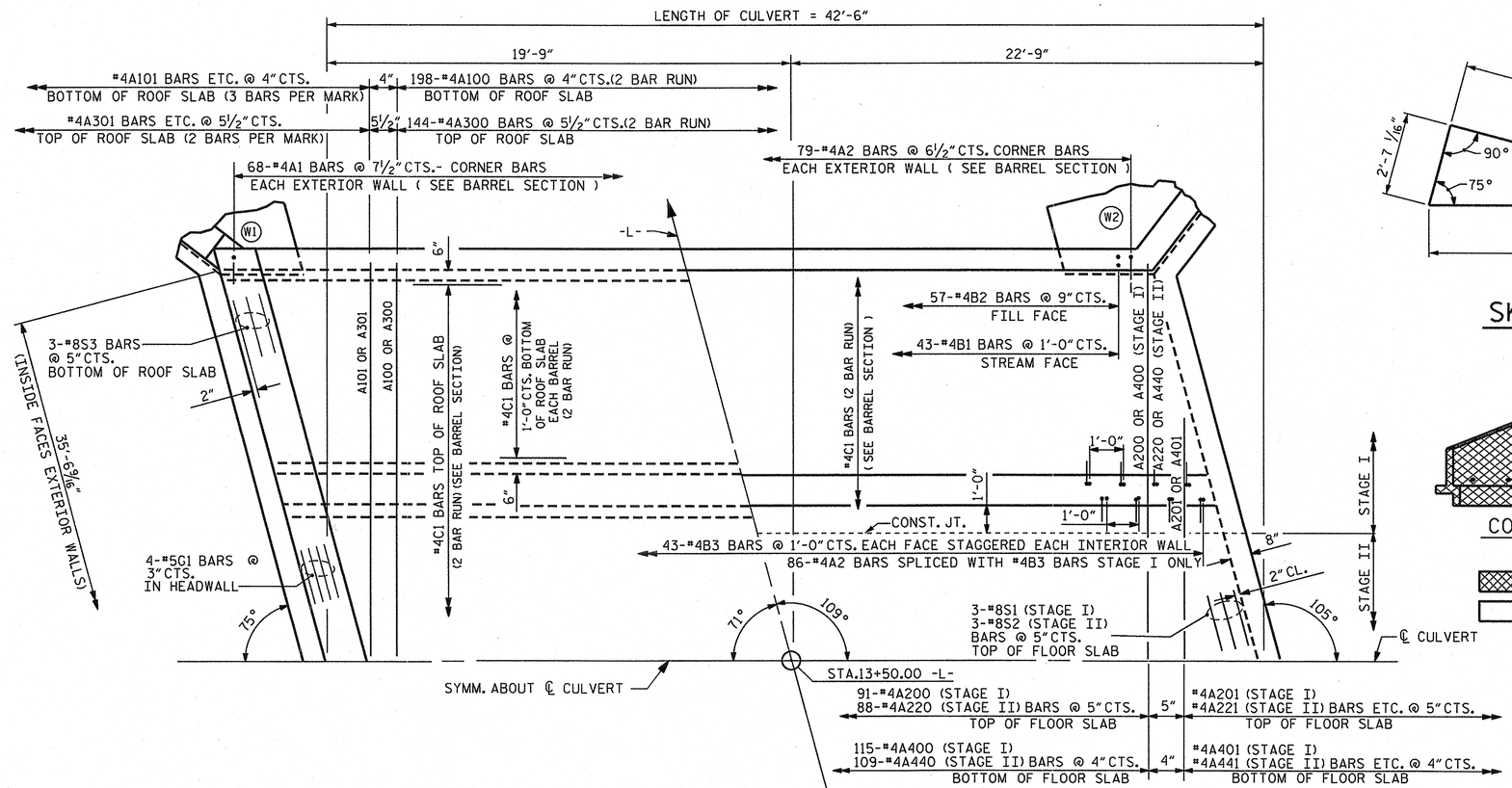

PART PLAN - ROOF SLAB

(#4A101 & #4A301 ARE 2 BAR RUN)

PART PLAN - FLOOR SLAB

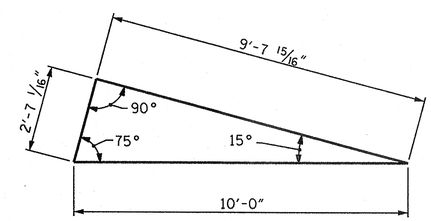

SKEW TRIANGLE

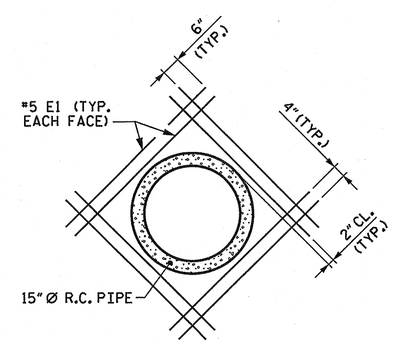

DETAIL OF REINFORCING AROUND 15" Ø PIPE

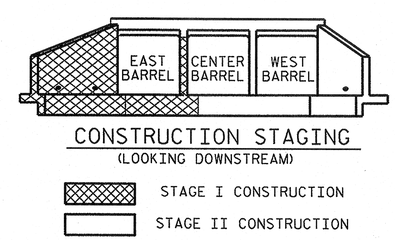

CONSTRUCTION STAGING

(LOOKING DOWNSTREAM)

PROJECT NO. 17BP.9.R.17

DAVIDSON COUNTY

STATION: 13+50.00 -L-

SHEET 2 OF 6

STATE OF NORTH CAROLINA
DEPARTMENT OF TRANSPORTATION
RALEIGH

BARREL STANDARD
TRIPLE 11FT. X 10FT.
CONCRETE BOX CULVERT
109° SKEW

1971

NORTH CAROLINA PROFESSIONAL SEAL 10730 ENGINEER D. ANDREW DAVENPORT, JR.
9-24-13

REVISIONS						SHEET NO.
NO.	BY:	DATE:	NO.	BY:	DATE:	C-2
1			3			TOTAL SHEETS
2			4			6

ASSEMBLED BY : D.A. DAVENPORT	DATE : 08/22/13	SPECIAL	
CHECKED BY : R.P. PATEL	DATE : 09/09/13		
DRAWN BY : BRAIN STALEY III	DATE : 11-30-71	STANDARD	
CHECKED BY : JOEL A. JOHNSON	DATE : 12-30-71		

REVISED 11-19-99 BY M.M. CHECKED BY R.W.W.
REVISED 8-28-92 BY E.L.R. CHECKED BY G.R.P.
REDRAWN 8-27-90 BY C.O.C. CHECKED BY M.A.J.

STD. NO. CR223

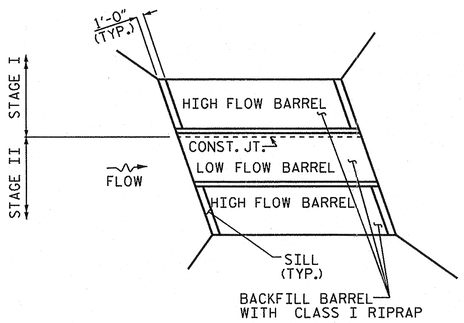

PLAN SHOWING BARREL LAYOUT WITH SILLS

NOTES:

PLACE SILLS AT INLET AND OUTLET OF EXTERIOR BARRELS ONLY.

BACKFILL EXTERIOR BARRELS WITH CLASS I RIP RAP TO A DEPTH OF 2'.

BACKFILL CENTER BARREL WITH CLASS I RIP RAP TO A DEPTH OF 1'.

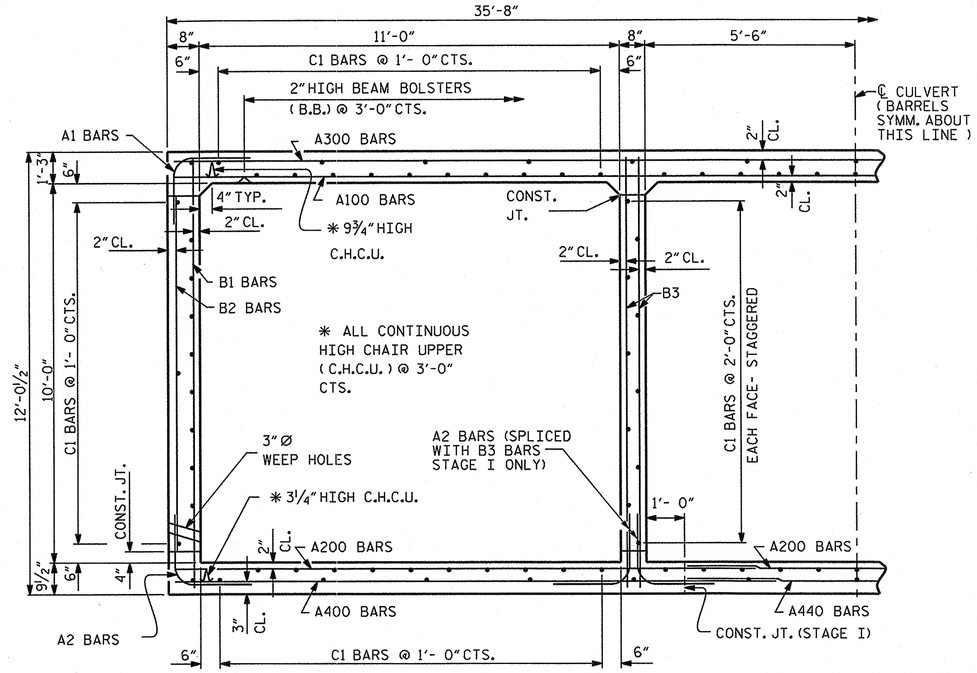

RIGHT ANGLE SECTION OF BARREL

THERE ARE 134 "C" BARS IN SECTION OF BARREL.
(LOOKING DOWNSTREAM)

STAGE I BILL OF MATERIAL

BAR	NO.	SIZE	TYPE	LENGTH	WEIGHT
A1	68	#4	1	5'-8"	257
A2	165	#4	1	4'-2"	459
A200	91	#4	STR	15'-1"	917
A201	2	#4	STR	14'-8"	20
A202	2	#4	STR	13'-1"	17
A203	2	#4	STR	11'-6"	15
A204	2	#4	STR	10'-0"	13
A205	2	#4	STR	8'-5"	11
A206	2	#4	STR	6'-10"	9
A207	2	#4	STR	5'-4"	7
A208	2	#4	STR	3'-9"	5
A209	2	#4	STR	2'-2"	3
A400	115	#4	STR	15'-1"	1159
A401	2	#4	STR	14'-0"	19
A402	2	#4	STR	12'-9"	17
A403	2	#4	STR	11'-6"	15
A404	2	#4	STR	10'-3"	14
A405	2	#4	STR	9'-1"	12
A406	2	#4	STR	7'-10"	10
A407	2	#4	STR	6'-7"	9
A408	2	#4	STR	5'-4"	7
A409	2	#4	STR	4'-1"	5
A410	2	#4	STR	2'-10"	4
B1	43	#4	STR	11'-5"	328
B2	57	#4	STR	9'-4"	355
B3	86	#4	STR	11'-6"	661
C1	76	#4	STR	22'-2"	1125
D1	6	#6	STR	2'-4"	21
S1	6	#8	STR	18'-7"	298
REINFORCING STEEL					5792 LBS

STAGE II BILL OF MATERIAL

BAR	NO.	SIZE	TYPE	LENGTH	WEIGHT
A100	198	#4	STR	18'-6"	2447
A101	12	#4	STR	16'-5"	132
A102	6	#4	STR	27'-4"	110
A103	6	#4	STR	23'-7"	95
A104	6	#4	STR	19'-11"	80
A105	6	#4	STR	16'-2"	65
A106	6	#4	STR	12'-5"	50
A107	6	#4	STR	8'-8"	35
A108	6	#4	STR	4'-11"	20
A1	68	#4	1	5'-8"	257
A2	79	#4	1	4'-2"	220
A220	88	#4	STR	21'-8"	1274
A221	2	#4	STR	20'-3"	27
A222	2	#4	STR	18'-9"	25

STAGE II BILL OF MATERIAL

BAR	NO.	SIZE	TYPE	LENGTH	WEIGHT
A223	2	#4	STR	17'-2"	23
A224	2	#4	STR	15'-7"	21
A225	2	#4	STR	14'-1"	19
A226	2	#4	STR	12'-6"	17
A227	2	#4	STR	10'-11"	15
A228	2	#4	STR	9'-5"	13
A229	2	#4	STR	7'-10"	10
A230	2	#4	STR	6'-3"	8
A231	2	#4	STR	4'-9"	6
A232	2	#4	STR	3'-2"	4
A300	144	#4	STR	18'-4"	1764
A301	8	#4	STR	16'-5"	88
A302	4	#4	STR	28'-0"	75
A303	4	#4	STR	24'-7"	66
A304	4	#4	STR	21'-2"	57
A305	4	#4	STR	17'-9"	47
A306	4	#4	STR	14'-3"	38
A307	4	#4	STR	10'-10"	29
A308	4	#4	STR	7'-5"	20
A309	4	#4	STR	4'-0"	11
A440	109	#4	STR	22'-0"	1602
A441	2	#4	STR	21'-3"	28
A442	2	#4	STR	20'-0"	27
A443	2	#4	STR	18'-9"	25
A444	2	#4	STR	17'-6"	23
A445	2	#4	STR	16'-3"	22
A446	2	#4	STR	15'-0"	20
A447	2	#4	STR	13'-9"	18
A448	2	#4	STR	12'-6"	17
A449	2	#4	STR	11'-3"	15
A450	2	#4	STR	10'-1"	13
A451	2	#4	STR	8'-9"	12
A452	2	#4	STR	7'-6"	10
A453	2	#4	STR	6'-3"	8
A454	2	#4	STR	5'-0"	7
A455	2	#4	STR	3'-10"	5
A456	2	#4	STR	2'-7"	3
B1	43	#4	STR	11'-5"	328
B2	57	#4	STR	9'-4"	355
B3	86	#4	STR	11'-6"	661
C1	192	#4	STR	22'-2"	2843
D1	6	#6	STR	2'-4"	21
E1	16	#5	STR	3'-8"	61
G1	8	#5	STR	36'-6"	305
S2	6	#8	STR	23'-0"	368
S3	6	#8	STR	36'-6"	585
REINFORCING STEEL					14550 LBS

BAR TYPE

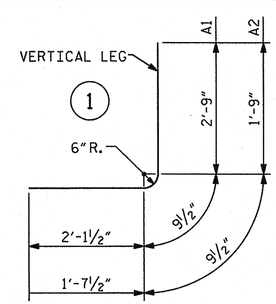

ALL BAR DIMENSIONS ARE OUT TO OUT

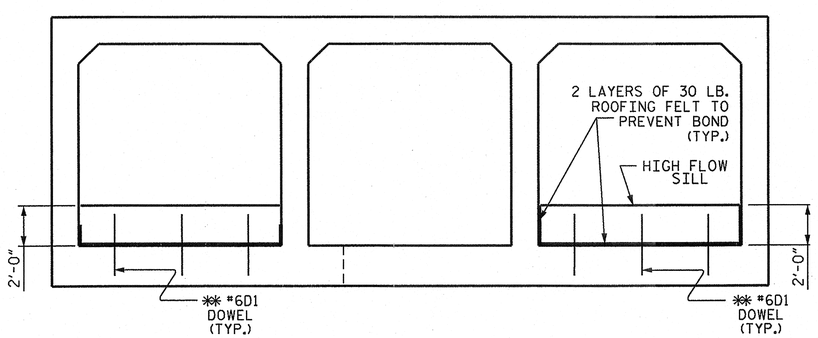

ELEVATION

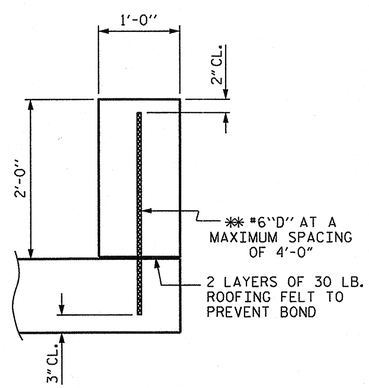

SECTION THROUGH SILL

✱✱ DOWELS MAY BE PUSHED INTO GREEN CONCRETE AFTER SLAB HAS BEEN FLOAT FINISHED.

CULVERT SILL DETAILS

SPLICE LENGTHS CHART

BAR	SIZE	SPLICE LENGTH
C1	#4	1'-11"
A100	#4	1'-9"
A200	#4	1'-5"
A300	#4	1'-5"
A400	#4	1'-9"
G	#5	3'-0"
S	#8	4'-11"

PROJECT NO. 17BP.9.R.17

DAVIDSON COUNTY

STATION: 13+50.00 -L-

SHEET 3 OF 6

STATE OF NORTH CAROLINA
DEPARTMENT OF TRANSPORTATION
RALEIGH

BARREL STANDARD

TRIPLE
11 FT. X 10 FT.
CONCRETE BOX CULVERT
109° SKEW

NORTH CAROLINA PROFESSIONAL SEAL 10730 ENGINEER D. ANDREW DAVENPORT, JR.

REVISIONS						SHEET NO.
NO.	BY:	DATE:	NO.	BY:	DATE:	C-3
1			3			TOTAL SHEETS
2			4			6

DRAWN BY : D.A. DAVENPORT DATE : 08/22/13
CHECKED BY : R.P. PATEL DATE : 09/09/13
DESIGN ENGINEER OF RECORD: D.A. DAVENPORT DATE : 09/11/13

25-SEP-2013 12:23
S:\DPG3\DIVISION_PROJECTS\Division 9\17BP.R.9.17\17BP.9.R.17_SD_CU.dgn
davenport

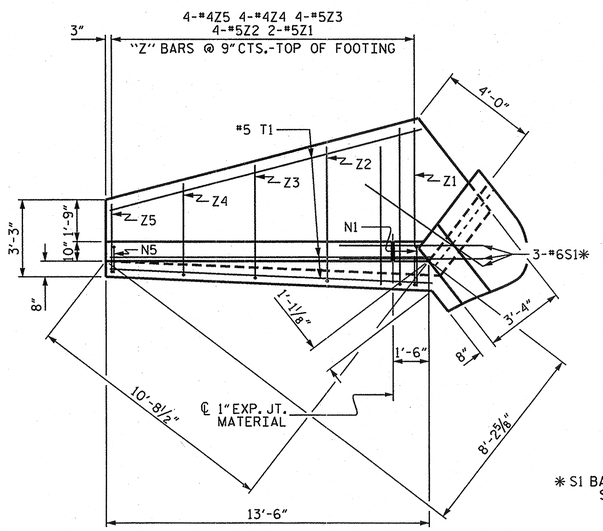

PLAN W2

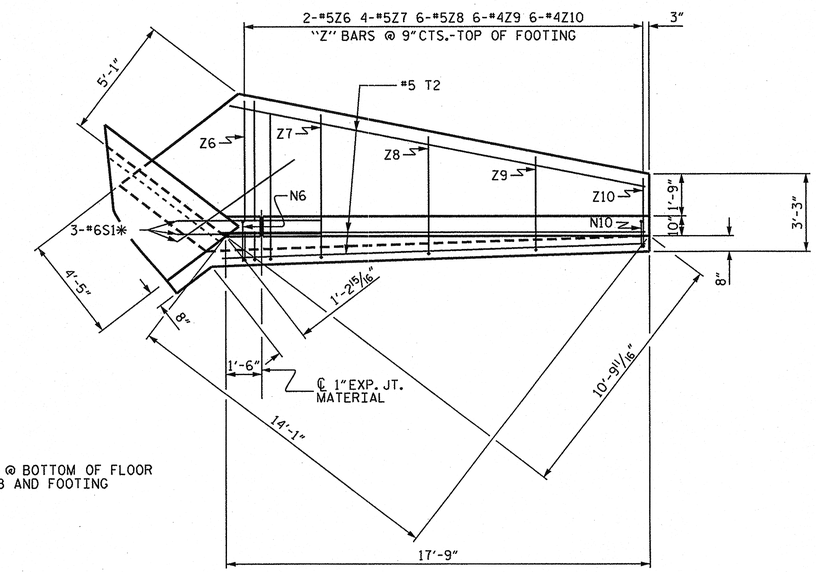

PLAN W1

* S1 BARS @ BOTTOM OF FLOOR SLAB AND FOOTING

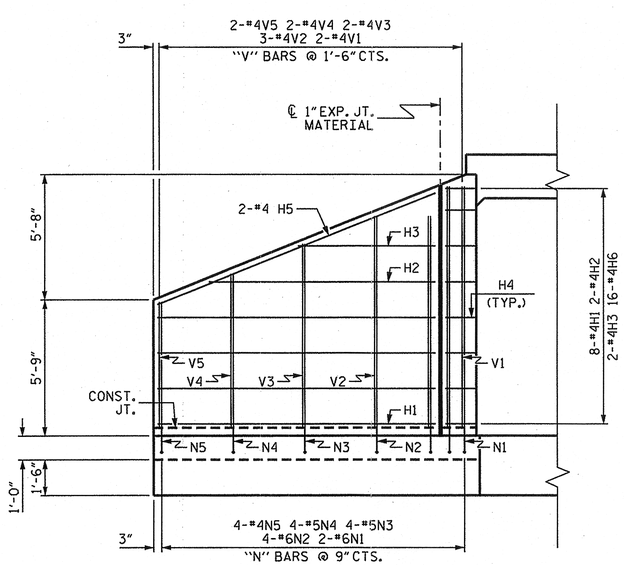

ELEVATION W2

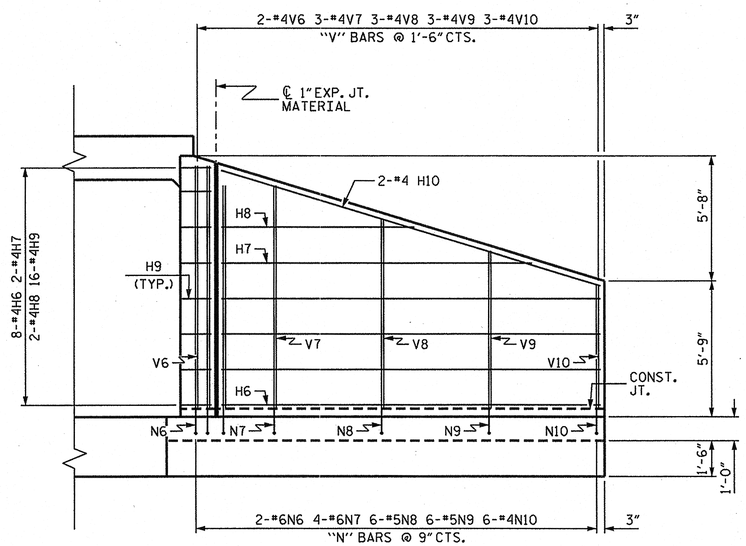

ELEVATION W1

BAR TYPES

ALL BAR DIMENSIONS ARE OUT TO OUT.

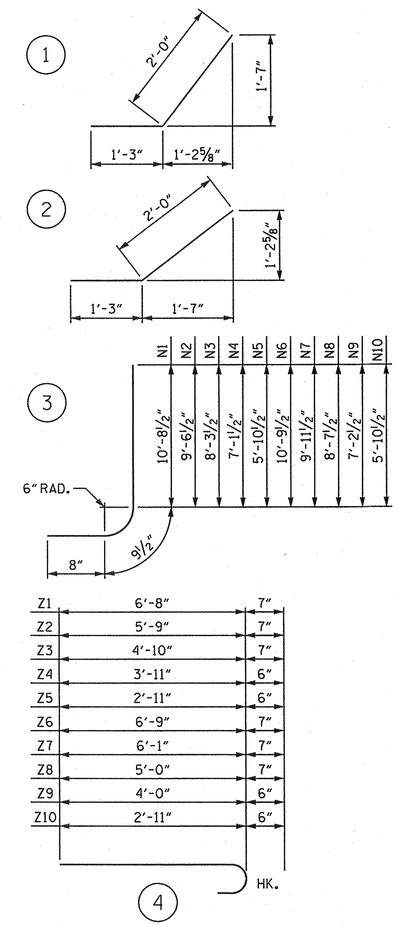

Z1	6'-8"	7"
Z2	5'-9"	7"
Z3	4'-10"	7"
Z4	3'-11"	6"
Z5	2'-11"	6"
Z6	6'-9"	7"
Z7	6'-1"	7"
Z8	5'-0"	7"
Z9	4'-0"	6"
Z10	2'-11"	6"

BILL OF MATERIAL

BAR	NO.	SIZE	TYPE	LENGTH	WEIGHT
H1	8	#4	STR	11'-7"	62
H2	2	#4	STR	9'-5"	13
H3	2	#4	STR	5'-8"	8
H4	16	#4	1	3'-3"	35
H5	2	#4	STR	12'-6"	17
H6	8	#4	STR	15'-10"	85
H7	2	#4	STR	13'-0"	17
H8	2	#4	STR	8'-1"	11
H9	16	#4	2	3'-3"	35
H10	2	#4	STR	16'-7"	22
N1	2	#6	3	12'-2"	37
N2	4	#6	3	11'-0"	66
N3	4	#5	3	9'-9"	41
N4	4	#5	3	8'-7"	36
N5	4	#4	3	7'-4"	20
N6	2	#6	3	12'-3"	37
N7	4	#6	3	11'-5"	69
N8	6	#5	3	10'-1"	63
N9	6	#5	3	8'-8"	54
N10	6	#4	3	7'-4"	29
S1	6	#6	STR	6'-0"	54
T1	3	#5	STR	13'-6"	42
T2	3	#5	STR	17'-9"	56
V1	2	#4	STR	10'-2"	14
V2	3	#4	STR	8'-11"	18
V3	2	#4	STR	7'-9"	10
V4	2	#4	STR	6'-6"	9
V5	2	#4	STR	5'-4"	7
V6	2	#4	STR	10'-3"	14
V7	3	#4	STR	9'-5"	19
V8	3	#4	STR	8'-0"	16
V9	3	#4	STR	6'-8"	13
V10	3	#4	STR	5'-3"	11
Z1	2	#5	4	7'-3"	15
Z2	4	#5	4	6'-4"	26
Z3	4	#5	4	5'-5"	23
Z4	4	#4	4	4'-5"	12
Z5	4	#4	4	3'-5"	9
Z6	2	#5	4	7'-4"	15
Z7	4	#5	4	6'-8"	28
Z8	6	#5	4	5'-7"	35
Z9	6	#4	4	4'-6"	18
Z10	6	#4	4	3'-5"	14
REINFORCING STEEL FOR 2 WINGS (4 REQUIRED)					1235 LBS

STAGE I
CLASS A CONCRETE

2 WINGS	16.4	CY
2 END CURTAIN WALLS	1.5	CY
TOTAL	17.9	CY

STAGE II
CLASS A CONCRETE

2 WINGS	16.4	CY
2 HEADWALLS	3.4	CY
2 END CURTAIN WALLS	2.6	CY
TOTAL	22.4	CY

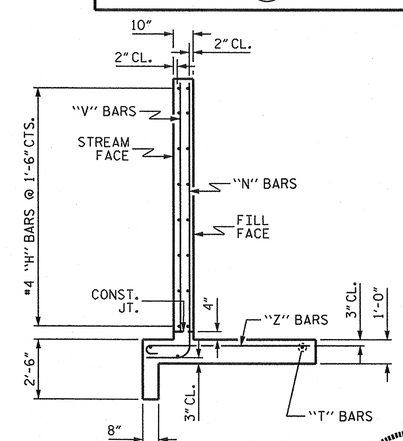

TYPICAL WING SECTION

NORTH CAROLINA PROFESSIONAL SEAL 10730 ENGINEER D. ANDREW DAVENPORT, JR.

PROJECT NO. 17BP.9.R.17

DAVIDSON COUNTY

STATION: 13+50.00 -L-

SHEET 4 OF 6

STATE OF NORTH CAROLINA
DEPARTMENT OF TRANSPORTATION
RALEIGH

STANDARD WINGS FOR CONCRETE BOX CULVERT

H = 10'-0" SLOPE = 2:1
105° SKEW

REVISIONS						SHEET NO.
NO.	BY:	DATE:	NO.	BY:	DATE:	C-4
1			3			TOTAL SHEETS
2			4			6

ASSEMBLED BY : D.A. DAVENPORT DATE : 08/22/13
CHECKED BY : R.P. PATEL DATE : 09/09/13

DRAWN BY : CCJ 01/00
CHECKED BY : RWW 03/00

STD. NO. CW7510.STD

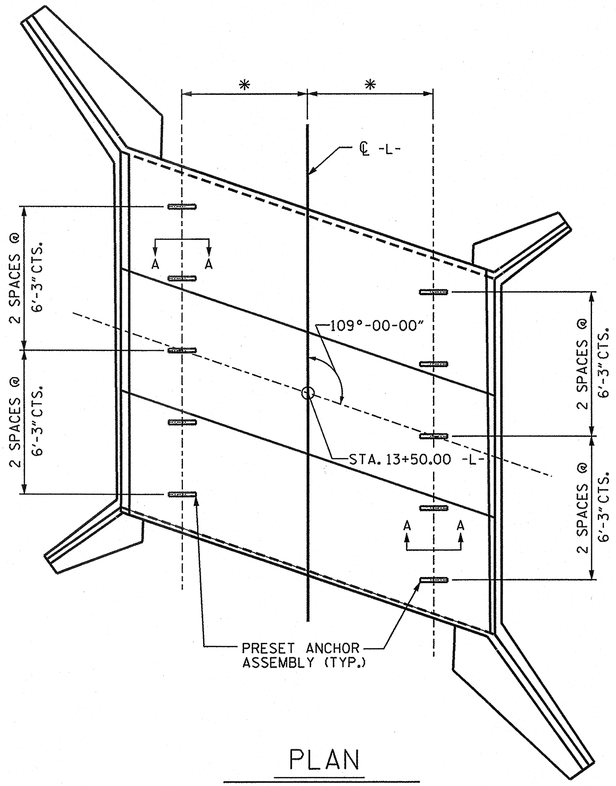

PLAN

SHOWING : GUARDRAIL ANCHOR ASSEMBLY SPACING.
* THIS DIMENSION TO BE FURNISHED BY THE ENGINEER

NOTES

THE GUARDRAIL ANCHOR ASSEMBLY FOR CULVERTS SHALL CONSIST OF THE FOLLOWING COMPONENTS :

A. FERRULES SHALL BE MADE FROM STEEL MEETING THE REQUIREMENTS OF AASHTO M169, GRADE 12L14 AND SHALL HAVE A MINIMUM LENGTH OF THREADS OF 2½".

B. 4 - 1" Ø X 2 ¼" BOLTS WITH WASHERS, BOLTS SHALL CONFORM TO THE REQUIREMENTS OF ASTM A307. BOLTS AND WASHERS SHALL BE GALVANIZED. (AT THE CONTRACTOR'S OPTION, STAINLESS STEEL BOLTS AND WASHERS MAY BE USED AS AN ALTERNATE FOR THE 1" Ø X 2¼" GALVANIZED BOLTS AND WASHERS. THEY SHALL CONFORM TO OR EXCEED THE MECHANICAL REQUIREMENTS OF ASTM A307. THE USE OF THIS ALTERNATE SHALL BE APPROVED BY THE ENGINEER.)

C. WIRE STRUTS SHOWN IN THE GUARDRAIL ANCHOR ASSEMBLY FOR CULVERTS DETAIL ARE MINIMUM ALLOWABLE SIZE AND SHALL HAVE A MINIMUM TENSILE STRENGTH OF 100,000 P.S.I. AS AN OPTION, A 7/16" Ø WIRE STRUT WITH A MINIMUM TENSILE STRENGTH OF 90,000 PSI IS ACCEPTABLE.

GUARDRAIL ANCHOR ASSEMBLY WITH BOLTS SHALL BE ASSEMBLED IN THE SHOP. BOLT THREADS MAY BE RECUT AS NECESSARY TO INSURE FIT.

THE COST OF THE GUARDRAIL ANCHOR ASSEMBLY FOR CULVERTS COMPLETE IN PLACE, SHALL BE INCLUDED IN THE UNIT CONTRACT PRICE BID FOR CLASS "A" CONCRETE.

FERRULES TO BE PLUGGED DURING POURING OF SLAB AS RECOMMENDED BY THE MANUFACTURER.

AT THE CONTRACTOR'S OPTION, FERRULES WITH OPEN OR CLOSED ENDS MAY BE USED.

PAYMENT FOR GUARDRAIL, POSTS, AND POST BASE PLATES IS INCLUDED IN ROADWAY PAY ITEMS.

SLAB REINFORCING STEEL MAY BE SHIFTED AS NECESSARY TO CLEAR GUARDRAIL ANCHOR ASSEMBLY. CARE SHOULD BE TAKEN TO KEEP THE SHIFTING OF REINFORCING STEEL TO A MINIMUM.

THE CONTRACTOR MAY USE ADHESIVELY ANCHORED ANCHOR BOLTS IN PLACE OF GUARDRAIL ANCHOR ASSEMBLY. LEVEL TWO FIELD TESTING IS REQUIRED, AND THE YIELD LOAD OF THE 1" Ø BOLT IS 21.8 KIPS. FOR ADHESIVELY ANCHORED ANCHOR BOLTS OR DOWELS, SEE STANDARD SPECIFICATIONS.

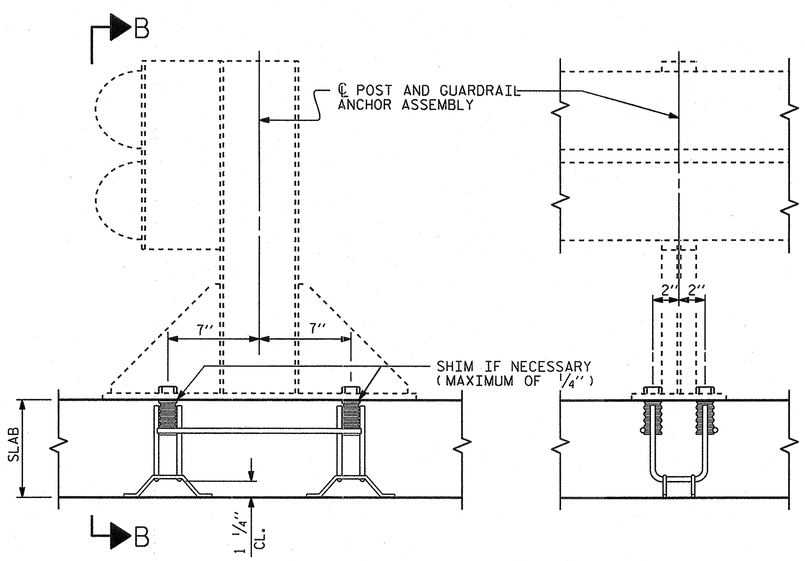

SECTION A-A

SECTION B-B

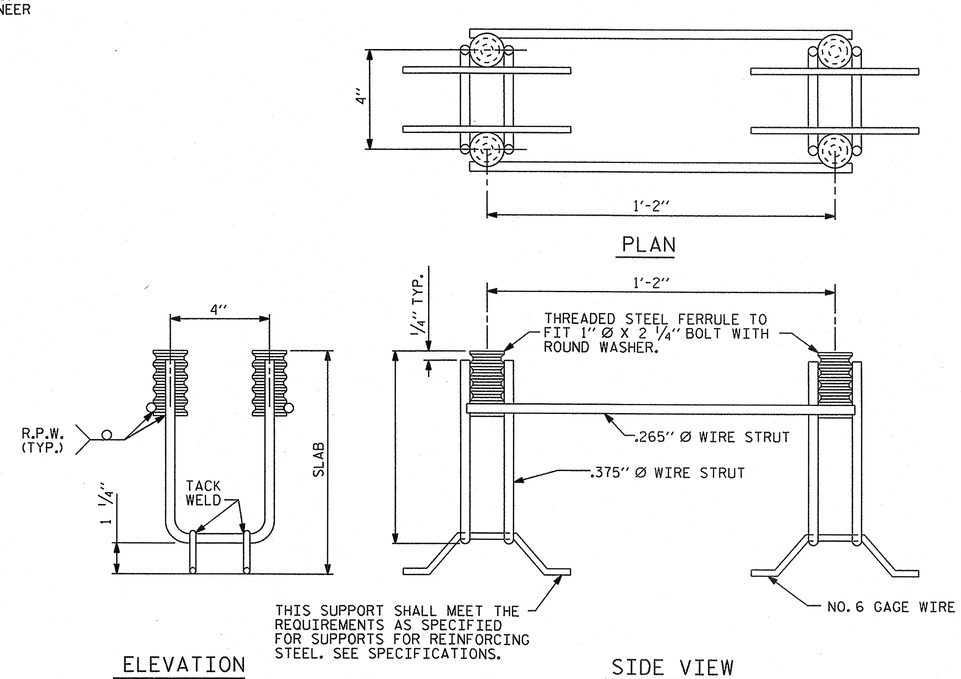

GUARDRAIL ANCHOR ASSEMBLY FOR CULVERTS

NORTH CAROLINA PROFESSIONAL SEAL 10730 ENGINEER D. ANDRE DAVENPORT, JR.
9-26-13

PROJECT NO. 17BP.9.R.17
DAVIDSON COUNTY
STATION: 13+50.00 -L-

SHEET 5 OF 6

STATE OF NORTH CAROLINA
DEPARTMENT OF TRANSPORTATION
RALEIGH

STANDARD

ANCHORAGE DETAILS FOR GUARDRAIL ANCHOR ASSEMBLY FOR CULVERTS

ASSEMBLED BY : D.A. DAVENPORT	DATE : 08/22/13		
CHECKED BY : R.P. PATEL	DATE : 09/09/13		
DESIGN ENGINEER OF RECORD: D.A. DAVENPORT	DATE : 09/25/13		
DRAWN BY : FCJ 6/88	REV. 5/7/03	RWW/JTE	
CHECKED BY : ARB 6/88	REV. 5/1/06R	KMM/GM	
	REV. 10/1/11	MAA/GM	

REVISIONS								SHEET NO.
NO.	BY:	DATE:	NO.	BY:	DATE:			C-5
1			3					TOTAL SHEETS
2			4					6

STD. NO. GRA1

25-SEP-2013 12:23
S:\DPG3\DIVISION_PROJECTS\Division 9\17BP.R.9.17\17BP.9.R.17_SD_CU.dgn

NON-INTERSTATE TRUCKS-LOAD AND RESISTANCE FACTOR RATING (LRFR) SUMMARY FOR REINFORCED CONCRETE BOX CULVERTS

LEVEL		VEHICLE	WEIGHT (W) (TONS)	CONTROLLING LOAD RATING (#)	MINIMUM RATING FACTORS (RF)	TONS = W × RF	STRENGTH I LIMIT STATE									COMMENT NUMBER
							LIVE-LOAD FACTORS $\gamma_{(LL)}$	MOMENT				SHEAR				
								RATING FACTOR	BOX NO.	ELEMENT TYPE	DISTANCE FROM LEFT END OF ELEMENT (ft)	RATING FACTOR	BOX NO.	ELEMENT TYPE	DISTANCE FROM LEFT END OF ELEMENT (ft)	
DESIGN LOAD RATING		HL-93 (INVENTORY)	N/A	1	1.04	--	1.75	1.32	1	BOTTOM SLAB	11.38	1.04	1	TOP SLAB	10.38	
		HL-93 (OPERATING)	N/A		1.35	--	1.35	1.71	1	BOTTOM SLAB	11.38	1.35	1	TOP SLAB	10.38	
		HS-20 (INVENTORY)	36.000	2	1.24	44.78	1.75	1.32	1	BOTTOM SLAB	11.38	1.24	1	BOTTOM SLAB	10.76	
		HS-20 (OPERATING)	36.000		1.61	58.05	1.35	1.71	1	BOTTOM SLAB	11.38	1.61	1	BOTTOM SLAB	10.76	
LEGAL LOAD RATING	SINGLE VEHICLE (SV)	SNSH	13.500		2.39	32.28	1.40	2.83	1	TOP SLAB	4.96	2.39	1	TOP SLAB	10.38	
		SNGARBS2	20.000		2.24	44.75	1.40	2.54	1	BOT. CORNER WALL	10.75	2.24	1	TOP SLAB	10.38	
		SNAGRIS2	22.000		2.39	52.60	1.40	2.43	1	BOT. CORNER WALL	10.75	2.39	1	TOP SLAB	10.38	
		SNCOTTS3	27.250		1.31	35.73	1.40	1.76	1	TOP SLAB	4.67	1.31	1	TOP SLAB	10.38	
		SNAGGRS4	34.925		1.60	55.79	1.40	1.70	1	BOTTOM SLAB	11.38	1.60	1	TOP SLAB	10.38	
		SNS5A	35.550		1.48	52.65	1.40	1.66	1	BOTTOM SLAB	11.38	1.48	1	TOP SLAB	10.38	
		SNS6A	39.950		1.42	56.60	1.40	1.49	1	BOTTOM SLAB	11.38	1.42	1	BOTTOM SLAB	10.76	
		SNS7B	42.000		1.34	56.35	1.40	1.42	1	BOTTOM SLAB	11.38	1.34	1	BOTTOM SLAB	10.76	
	TRUCK TRACTOR SEMI-TRAILER (TTST)	TNAGRIT3	33.000		1.70	56.21	1.40	1.82	1	BOTTOM SLAB	11.38	1.70	1	BOTTOM SLAB	10.76	
		TNT4A	33.075		1.56	51.60	1.40	1.82	1	BOTTOM SLAB	11.38	1.56	1	TOP SLAB	10.38	
		TNT6A	41.600		1.35	56.31	1.40	1.43	1	BOTTOM SLAB	11.38	1.35	1	BOTTOM SLAB	10.76	
		TNT7A	42.000		1.40	58.95	1.40	1.49	1	BOTTOM SLAB	11.38	1.40	1	BOTTOM SLAB	10.76	
		TNT7B	42.000		1.41	59.23	1.40	1.53	1	BOTTOM SLAB	11.38	1.41	1	BOTTOM SLAB	10.76	
		TNAGRIT4	43.000		1.31	56.44	1.40	1.41	1	BOTTOM SLAB	11.38	1.31	1	BOTTOM SLAB	10.76	
		TNAGT5A	45.000	3	1.25	56.38	1.40	1.34	1	BOTTOM SLAB	11.38	1.25	1	BOTTOM SLAB	10.76	
		TNAGT5B	45.000		1.25	56.38	1.40	1.33	1	BOTTOM SLAB	11.38	1.25	1	BOTTOM SLAB	10.76	

LOAD FACTORS:

DESIGN LOAD RATING FACTORS

LOAD TYPE	MAX FACTOR	MIN FACTOR
DC	1.25	0.90
DW	1.50	0.65
EV	1.30	0.90
EH	1.35	0.90
ES	1.35	0.90
LS	1.75	--
WA	1.00	--

NOTE:

RATING FACTORS ARE BASED ON THE STRENGTH I LIMIT STATE.

(#) CONTROLLING LOAD RATING

(1) DESIGN LOAD RATING (HL-93)

(2) DESIGN LOAD RATING (HS-20)

(3) LEGAL LOAD RATING **

** SEE CHART FOR VEHICLE TYPE

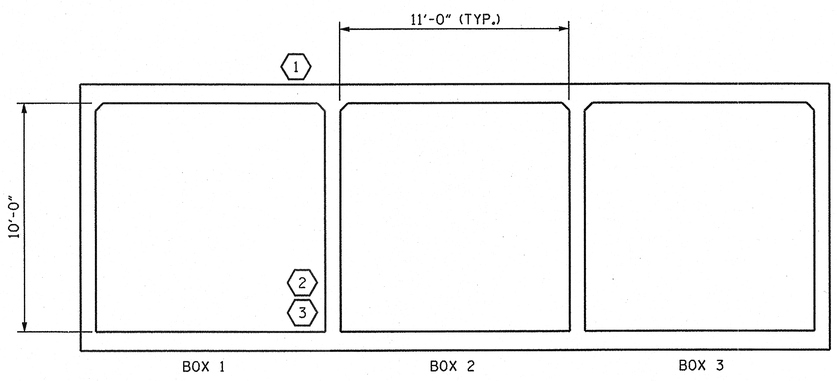

LRFR SUMMARY

(LOOKING DOWNSTREAM)

PROJECT NO. 17BP.9.R.17

DAVIDSON COUNTY

STATION: 13+50.00 -L-

SHEET 6 OF 6

STATE OF NORTH CAROLINA
DEPARTMENT OF TRANSPORTATION
RALEIGH

STANDARD

LRFR SUMMARY FOR REINFORCED CONCRETE BOX CULVERTS (NON-INTERSTATE TRAFFIC)

NORTH CAROLINA PROFESSIONAL SEAL 10730 ENGINEER DAVENPORT, JR. D. ANDRE

9-26-13

REVISIONS						SHEET NO.
NO.	BY:	DATE:	NO.	BY:	DATE:	C-6
1			3			TOTAL SHEETS
2			4			6

ASSEMBLED BY : D.A. DAVENPORT DATE : 8/23/13
CHECKED BY : R.P. PATEL DATE : 9/9/13
DESIGN ENGINEER OF RECORD: D.A. DAVENPORT DATE : 9/25/13
DRAWN BY : WMC 7/11
CHECKED BY : GM 7/11
REV. 10/1/11 MAA/GM

25-SEP-2013 12:23
S:\DPG3\DIVISION_PROJECTS\Division 9\17BP.R.9.17\17BP.9.R.17_SD_CU.dgn
dadavenport

STD. NO. LRFR5

STANDARD NOTES

DESIGN DATA:

SPECIFICATIONS	A.A.S.H.T.O. (CURRENT)
LIVE LOAD	SEE PLANS
IMPACT ALLOWANCE	SEE A.A.S.H.T.O.
STRESS IN EXTREME FIBER OF	
STRUCTURAL STEEL - AASHTO M270 GRADE 36	20,000 LBS. PER SQ. IN.
- AASHTO M270 GRADE 50W	27,000 LBS. PER SQ. IN.
- AASHTO M270 GRADE 50	27,000 LBS. PER SQ. IN.
REINFORCING STEEL IN TENSION	
GRADE 60	24,000 LBS. PER SQ. IN.
CONCRETE IN COMPRESSION	1,200 LBS. PER SQ. IN.
CONCRETE IN SHEAR	SEE A.A.S.H.T.O.
STRUCTURAL TIMBER - TREATED OR	
UNTREATED - EXTREME FIBER STRESS	1,800 LBS. PER SQ. IN.
COMPRESSION PERPENDICULAR TO GRAIN OF TIMBER	375 LBS. PER SQ. IN.
EQUIVALENT FLUID PRESSURE OF EARTH	30 LBS. PER CU. FT. (MINIMUM)

MATERIAL AND WORKMANSHIP:

EXCEPT AS MAY OTHERWISE BE SPECIFIED ON PLANS OR IN THE SPECIAL PROVISIONS, ALL MATERIAL AND WORKMANSHIP SHALL BE IN ACCORDANCE WITH THE 2012 "STANDARD SPECIFICATIONS FOR ROADS AND STRUCTURES" OF THE N. C. DEPARTMENT OF TRANSPORTATION.

STEEL SHEET PILING FOR PERMANENT OR TEMPORARY APPLICATIONS SHALL BE HOT ROLLED.

CONCRETE:

UNLESS OTHERWISE REQUIRED ON PLANS, CLASS A CONCRETE SHALL BE USED FOR ALL PORTIONS OF ALL STRUCTURES WITH THE EXCEPTION THAT: CLASS AA CONCRETE SHALL BE USED IN BRIDGE SUPERSTRUCTURES, ABUTMENT BACKWALLS, AND APPROACH SLABS; AND CLASS B CONCRETE SHALL BE USED FOR SLOPE PROTECTION AND RIP RAP.

CONCRETE CHAMFERS:

UNLESS OTHERWISE NOTED ON THE PLANS, ALL EXPOSED CORNERS ON STRUCTURES SHALL BE CHAMFERED 3/4" WITH THE FOLLOWING EXCEPTIONS: TOP CORNERS OF CURBS MAY BE ROUNDED TO 1-1/2" RADIUS WHICH IS BUILT INTO CURB FORMS; CORNERS OF TRANSVERSE FLOOR EXPANSION JOINTS SHALL BE ROUNDED WITH A 1/4" FINISHING TOOL UNLESS OTHERWISE REQUIRED ON PLANS; AND CORNERS OF EXPANSION JOINTS IN THE ROADWAY FACES AND TOPS OF CURBS AND SIDEWALKS SHALL BE ROUNDED TO A 1/4" RADIUS WITH A FINISHING STONE OR TOOL UNLESS OTHERWISE REQUIRED ON PLANS.

DOWELS:

DOWELS WHEN INDICATED ON PLANS AS FOR CULVERT EXTENSIONS, SHALL BE EMBEDDED AT LEAST 12" INTO THE OLD CONCRETE AND GROUTED INTO PLACE WITH 1:2 CEMENT MORTAR.

ALLOWANCE FOR DEAD LOAD DEFLECTION, SETTLEMENT, ETC. IN CASTING SUPERSTRUCTURES:

BRIDGES SHALL BE BUILT ON THE GRADE OR VERTICAL CURVE SHOWN ON PLANS. SLABS, CURBS AND PARAPETS SHALL CONFORM TO THE GRADE OR CURVE.

ALL DIMENSIONS WHICH ARE GIVEN IN SECTION AND ARE AFFECTED BY DEAD LOAD DEFLECTIONS ARE DIMENSIONS AT CENTER LINE OF BEARING UNLESS OTHERWISE NOTED ON PLANS. IN SETTING FORMS FOR STEEL BEAM BRIDGES AND PRESTRESSED CONCRETE GIRDER BRIDGES, ADJUSTMENTS SHALL BE MADE DUE TO THE DEAD LOAD DEFLECTIONS FOR THE ELEVATIONS SHOWN. WHERE BLOCKS ARE SHOWN OVER BEAMS FOR BUILDING UP TO THE SLAB, THE VERTICAL DIMENSIONS OF THE BLOCKS SHALL BE ADJUSTED BETWEEN BEARINGS TO COMPENSATE FOR DEAD LOAD DEFLECTIONS, VERTICAL CURVE ORDINATE, AND ACTUAL BEAM CAMBER. WHERE BOTTOM OF SLAB IS IN LINE WITH BOTTOM OF TOP FLANGES, DEPTH OF SLAB BETWEEN BEARINGS SHALL BE ADJUSTED TO COMPENSATE FOR DEAD LOAD DEFLECTION, VERTICAL CURVE ORDINATE, AND ACTUAL BEAM CAMBER.

IN SETTING FALSEWORK AND FORMS FOR REINFORCED CONCRETE SPANS, AN ALLOWANCE SHALL BE MADE FOR DEAD LOAD DEFLECTIONS, SETTLEMENT OF FALSEWORK, AND PERMANENT CAMBER WHICH SHALL BE PROVIDED FOR IN ADDITION TO THE ELEVATIONS SHOWN. AFTER REMOVAL OF THE FALSEWORK, THE FINISHED STRUCTURES SHALL CONFORM TO THE PROFILE AND ELEVATIONS SHOWN ON THE PLANS AND CONSTRUCTION ELEVATIONS FURNISHED BY THE ENGINEER.

DETAILED DRAWINGS FOR FALSEWORK OR FORMS FOR BRIDGE SUPERSTRUCTURE AND ANY STRUCTURE OR PARTS OF A STRUCTURE AS NOTED ON THE PLANS SHALL BE SUBMITTED TO THE ENGINEER FOR APPROVAL BEFORE CONSTRUCTION OF THE FALSEWORK OR FORMS IS STARTED.

REINFORCING STEEL:

ALL REINFORCING STEEL SHALL BE DEFORMED. DIMENSIONS RELATIVE TO PLACEMENT OF REINFORCING ARE TO CENTERS OF BARS UNLESS OTHERWISE INDICATED IN THE PLANS. DIMENSIONS ON BAR DETAILS ARE TO CENTERS OF BARS OR ARE OUT TO OUT AS INDICATED ON PLANS.

WIRE BAR SUPPORTS SHALL BE PROVIDED FOR REINFORCING STEEL WHERE INDICATED ON THE PLANS. WHEN BAR SUPPORT PIECES ARE PLACED IN CONTINUOUS LINES, THEY SHALL BE SO PLACED THAT THE ENDS OF THE SUPPORTING WIRES SHALL BE LAPPED TO LOCK LEGS ON ADJOINING PIECES.

STRUCTURAL STEEL:

AT THE CONTRACTOR'S OPTION, HE MAY SUBSTITUTE 7/8" Ø SHEAR STUDS FOR THE 3/4" Ø STUDS SPECIFIED ON THE PLANS. THIS SUBSTITUTION SHALL BE MADE AT THE RATE OF 3 - 7/8" Ø STUDS FOR 4 - 3/4" Ø STUDS, AND STUD SPACING CHANGES SHALL BE MADE AS NECESSARY TO PROVIDE THE SAME EQUIVALENT NUMBER OF 7/8" Ø STUDS ALONG THE BEAM AS SHOWN FOR 3/4" Ø STUDS BASED ON THE RATIO OF 3 - 7/8" Ø STUDS FOR 4 - 3/4" Ø STUDS. STUDS OF THE LENGTH SPECIFIED ON THE PLANS MUST BE PROVIDED. THE MAXIMUM SPACING SHALL BE 2'-0".

EXCEPT AT THE INTERIOR SUPPORTS OF CONTINUOUS BEAMS WHERE THE COVER PLATE IS IN CONTACT WITH BEARING PLATE, THE CONTRACTOR MAY, AT HIS OPTION, SUBSTITUTE FOR THE COVER PLATES DESIGNATED ON THE PLANS COVER PLATES OF THE EQUIVALENT AREA PROVIDED THESE PLATES ARE AT LEAST 5/16" IN THICKNESS AND DO NOT EXCEED A WIDTH EQUAL TO THE FLANGE WIDTH LESS 2" OR A THICKNESS EQUAL TO 2 TIMES THE FLANGE THICKNESS. THE SIZE OF FILLET WELDS SHALL CONFORM TO THE REQUIREMENTS OF THE CURRENT ANSI/AASHTO/AWS "BRIDGE WELDING CODE". ELECTROSLAG WELDING WILL NOT BE PERMITTED.

WITH THE SOLE EXCEPTION OF EDGES AT SURFACES WHICH BEAR ON OTHER SURFACES, ALL SHARP EDGES AND ENDS OF SHAPES AND PLATES SHALL BE SLIGHTLY ROUNDED BY SUITABLE MEANS TO A RADIUS OF APPROXIMATELY 1/16 INCH OR EQUIVALENT FLAT SURFACE AT A SUITABLE ANGLE PRIOR TO PAINTING, GALVANIZING, OR METALLIZING.

HANDRAILS AND POSTS:

METAL STANDARDS AND FACES OF THE CONCRETE END POSTS FOR THE METAL RAIL SHALL BE SET NORMAL TO THE GRADE OF THE CURB, UNLESS OTHERWISE SHOWN ON PLANS. THE METAL RAIL AND TOPS OF CONCRETE POSTS USED WITH THE ALUMINUM RAIL SHALL BE BUILT PARALLEL TO THE GRADE OF THE CURB.

METAL HANDRAILS SHALL BE IN ACCORDANCE WITH THE PLANS. RAILS SHALL BE AS MANUFACTURED FOR BRIDGE RAILING. CASTINGS SHALL BE OF A UNIFORM APPEARANCE. FINS AND OTHER DEFORMATIONS RESULTING FROM CASTING OR OTHERWISE SHALL BE REMOVED IN A MANNER SO THAT A UNIFORM COLORING OF THE COMPLETED CASTING SHALL BE OBTAINED. CASTINGS WITH DISCOLORATIONS OR OF NON-UNIFORM COLORING WILL NOT BE ACCEPTED. CERTIFIED MILL REPORTS ARE REQUIRED FOR METAL RAILS AND POSTS.

SPECIAL NOTES:

GENERALLY, IN CASE OF DISCREPANCY, THIS STANDARD SHEET OF NOTES SHALL GOVERN OVER THE SPECIFICATIONS, BUT THE REMAINDER OF THE PLANS SHALL GOVERN OVER NOTES HEREON, AND SPECIAL PROVISIONS SHALL GOVERN OVER ALL. SEE SPECIFICATIONS ARTICLE 105-4.

ENGLISH

JANUARY, 1990