DocuSign Envelope ID: CA9E4F33-8DDF-412E-A0EA-D23883B709BC

09/08/99

TIP PROJECT: 17BP.9.R.26

CONTRACT: DI00108

STATE OF NORTH CAROLINA
DIVISION OF HIGHWAYS

ROWAN COUNTY

STATE	STATE PROJECT REFERENCE NO.	SHEET NO.	TOTAL SHEETS
N.C.	17BP.9.R.26	1	

W.B.S. NO.	F.A. PROJ. NO.	DESCRIPTION
17BP.9.R.26		PE
17BP.9.R.26		R /W, UTIL
17BP.9.R.26		CONST.

LOCATION: BRIDGE NO. 306 OVER CRANE CREEK ON SR 2532 (GLOVER ROAD)

TYPE OF WORK: WIDENING, GRADING, PAVING, DRAINAGE, AND STRUCTURE

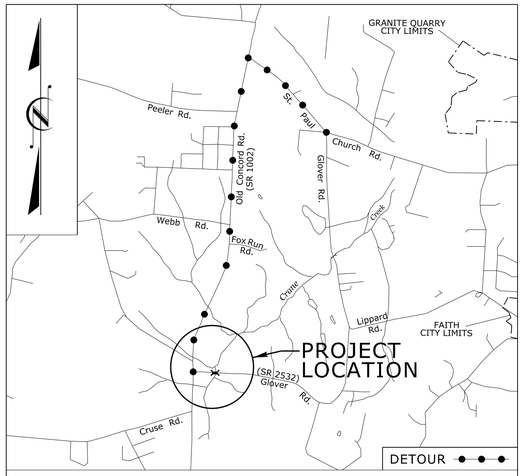

VICINITY MAP

NAD 83 / NSRS 2007

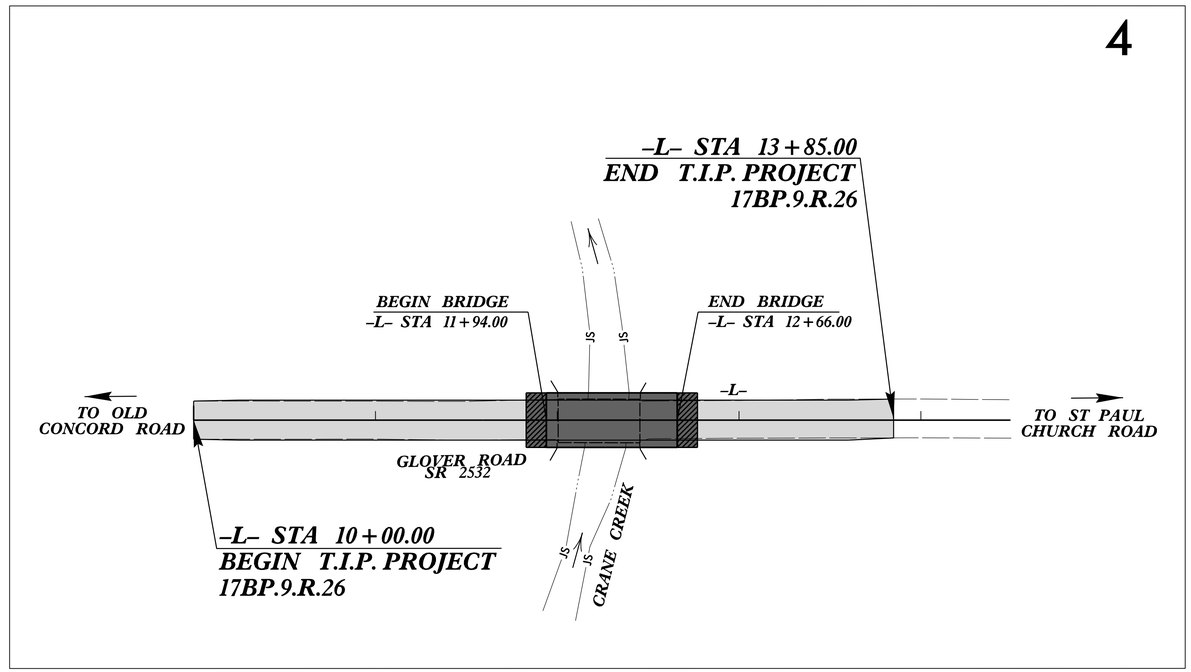

GRAPHIC SCALES

50 25 0 50 100
PLANS

50 25 0 50 100
PROFILE (HORIZONTAL)

10 5 0 10 20
PROFILE (VERTICAL)

DESIGN DATA

ADT 2008 = 1100
ADT 2025 = 2200
DHV = X %
D = X %
T = X %
V = 50 MPH

FUNC CLASS = RURAL LOCAL

PROJECT LENGTH

LENGTH ROADWAY T.I.P. PROJECT 17BP.9.R.26	=	0.059 MILES
LENGTH STRUCTURES T.I.P. PROJECT 17BP.9.R.26	=	0.014 MILES
TOTAL LENGTH T.I.P. PROJECT 17BP.9.R.26	=	0.073 MILES

Prepared in the Office of:
ATKINS
1616 E. MILLBROOK ROAD, SUITE #310
RALEIGH, NORTH CAROLINA 27609
(919) 876-6888 NCBEES #F-0326

2012 STANDARD SPECIFICATIONS

RIGHT OF WAY DATE:
OCTOBER 2014

LETTING DATE:
JUNE 2015

CLINTON MORGAN, P.E.
PROJECT ENGINEER

IAN BERDEAU, E.I.
PROJECT DESIGN ENGINEER

MATTHEW JONES, P.E.
NCDOT CONTACT

HYDRAULICS ENGINEER

NORTH CAROLINA PROFESSIONAL SEAL 032721 ENGINEER JOHN F. OGLESBY

DocuSigned by: John F. Oglesby 6/10/2015 P.E.
SIGNATURE:

ROADWAY DESIGN ENGINEER

NORTH CAROLINA PROFESSIONAL SEAL 024929 ENGINEER CLINTON J. MORGAN

DocuSigned by: Clinton J. Morgan 6/10/2015 P.E.
SIGNATURE:

DIVISION OF HIGHWAYS
STATE OF NORTH CAROLINA

STATE OF NORTH CAROLINA DEPARTMENT OF TRANSPORTATION

P.E.
STATE HIGHWAY DESIGN ENGINEER

21-MAY-2015 11:37
R:\790306\Roadway\Proj\790306_Rdy_tsh.dgn
$$$$USERNAME$$$$

DocuSign Envelope ID: CA9E4F33-8DDF-412E-A0EA-D23883B709BC

8/17/99

PROJECT REFERENCE NO.	SHEET NO.
17BP.9.R.26	1A

ROADWAY DESIGN ENGINEER

NORTH CAROLINA PROFESSIONAL SEAL 024929 ENGINEER CLINTON J. MORGAN

DocuSigned by: Clinton J. Morgan 8/10/2015
EC980304610648E...

INDEX OF SHEETS

SHEET NUMBER	SHEET
1	TITLE SHEET
1A	INDEX OF SHEETS, GENERAL NOTES, AND LIST OF STANDARD DRAWINGS
1B	CONVENTIONAL SYMBOLS
1C	SURVEY CONTROL SHEET
1D	CENTERLINE COORDINATE LIST
2	PAVEMENT SCHEDULE, TYPICAL SECTIONS, WEDGING DETAIL, AND MILLING DETAIL
3A	SUMMARY OF GUARDRAIL,EARTHWORK, DRAINAGE, SHOULDER BERM GUTTER, AND PAVEMENT REMOVAL SUMMARY
4	PLAN AND PROFILE SHEET
TMP-1 THRU TMP-2	TRAFFIC MANAGEMENT PLANS
EC-1 THRU EC-4	EROSION CONTROL PLANS
S-1 THRU S-13	STRUCTURE PLANS
UO-1 THRU UO-2	UTILITIES BY OTHERS PLANS
X-0 THRU X-0A	CROSS SECTION SUMMARY AND INDEX SHEET
X-1 THRU X-3	CROSS-SECTIONS

GENERAL NOTES:

2012 SPECIFICATIONS
EFFECTIVE: 01-17-2012
REVISED: 07-30-2012

GRADING AND SURFACING OR RESURFACING AND WIDENING:

THE GRADE LINES SHOWN DENOTE THE FINISHED ELEVATION OF THE PROPOSED SURFACING AT GRADE POINTS SHOWN ON THE TYPICAL SECTIONS. WHERE NO GRADE LINES ARE SHOWN, THE PROFILES SHOWN DENOTE THE TOP ELEVATION OF THE EXISTING PAVEMENT ALONG THE CENTER LINE OF SURVEY ON WHICH THE PROPOSED RESURFACING WILL BE PLACED. GRADE LINES MAY BE ADJUSTED BY THE ENGINEER IN ORDER TO SECURE A PROPER TIE-IN.

CLEARING:

CLEARING ON THIS PROJECT SHALL BE PERFORMED TO THE LIMITS ESTABLISHED BY METHOD III.

SUPERELEVATION:

ALL CURVES ON THIS PROJECT SHALL BE SUPERELEVATED IN ACCORDANCE WITH STD. NO. 225.04
SUPERELEVATION IS TO BE REVOLVED ABOUT THE GRADE POINTS SHOWN ON THE TYPICAL SECTIONS.

SHOULDER CONSTRUCTION:

ASPHALT, EARTH, AND CONCRETE SHOULDER CONSTRUCTION ON THE HIGH SIDE OF SUPERELEVATED CURVES SHALL BE IN ACCORDANCE WITH

SIDE ROADS:

THE CONTRACTOR WILL BE REQUIRED TO DO ALL NECESSARY WORK TO PROVIDE SUITABLE CONNECTIONS WITH ALL ROADS, STREETS, AND DRIVES ENTERING THIS PROJECT. THIS WORK WILL BE PAID FOR AT THE CONTRACT UNIT PRICE FOR THE PARTICULAR ITEMS INVOLVED.

GUARDRAIL:

THE GUARDRAIL LOCATIONS SHOWN ON THE PLANS MAY BE ADJUSTED DURING CONSTRUCTION AS DIRECTED BY THE ENGINEER. THE CONTRACTOR SHOULD CONSULT WITH THE ENGINEER PRIOR TO ORDERING GUARDRAIL MATERIAL.

END BENTS:

THE ENGINEER SHALL CHECK THE STRUCTURE END BENT PLANS, DETAILS, AND CROSS-SECTION PRIOR TO SETTING OF THE SLOPE STAKES FOR THE EMBANKMENT OR EXCAVATION APPROACHING A BRIDGE.

UTILITIES:

UTILITY OWNERS ON THIS PROJECT ARE

DUKE POWER, AT&T TELICS, AND TIME WARNER CABLE

ANY RELOCATION OF EXISTING UTILITIES WILL BE ACCOMPLISHED BY OTHERS.

RIGHT-OF-WAY MARKERS:

ALL RIGHT-OF-WAY MARKERS ON THIS PROJECT SHALL BE PLACED BY CONTRACT.

EFF. 01-17-2012
REV. 10-30-2012

2012 ROADWAY ENGLISH STANDARD DRAWINGS

The following Roadway Standards as appear in "Roadway Standard Drawings" Highway Design Branch - N. C. Department of Transportation - Raleigh, N. C., Dated January, 2012 are applicable to this project and by reference hereby are considered a part of these plans:

STD.NO.	TITLE
DIVISION 2 - EARTHWORK	
200.03	Method of Clearing - Method III
225.02	Guide for Grading Subgrade - Secondary and Local
225.04	Method of Obtaining Superelevation - Two Lane Pavement
DIVISION 3 - PIPE CULVERTS	
300.01	Method of Pipe Installation
DIVISION 4 - MAJOR STRUCTURES	
422.10	Reinforced Bridge Approach Fills
DIVISION 5 - SUBGRADE, BASES AND SHOULDERS	
560.01	Method of Shoulder Construction - High Side of Superelevated Curve - Method I
DIVISION 8 - INCIDENTALS	
840.00	Concrete Base Pad for Drainage Structures
840.18	Concrete Grated Drop Inlet Type 'B' - 12" thru 36" Pipe
840.27	Brick Grated Drop Inlet Type 'B' - 12" thru 36" Pipe
840.29	Frames and Narrow Slot Flate Grates
846.04	Drop Inlet Installation in Shoulder Berm Gutter
862.01	Guardrail Placement
862.02	Guardrail Installation
862.03	Structure Anchor Units (Details in Lieu of Standard Drawing as March 2013 Letting)
876.02	Guide for Rip Rap at Pipe Outlets

21-MAY-2015 14:00
R:\Roadway\Proj\790306_Rdy_psh_1A.dgn
$$USERNAME$$

DocuSign Envelope ID: CA9E4F33-8DDF-412E-A0EA-D23883B709BC

04/16/11

PROJECT REFERENCE NO.	SHEET NO.
17BP.9.R.26	1B

Note: Not to Scale

****S.U.E. = Subsurface Utility Engineering***

STATE OF NORTH CAROLINA
DIVISION OF HIGHWAYS

CONVENTIONAL PLAN SHEET SYMBOLS

BOUNDARIES AND PROPERTY:

- State Line
- County Line
- Township Line
- City Line
- Reservation Line
- Property Line
- Existing Iron Pin — EIP
- Property Corner
- Property Monument — ECM
- Parcel/Sequence Number — 123
- Existing Fence Line
- Proposed Woven Wire Fence
- Proposed Chain Link Fence
- Proposed Barbed Wire Fence
- Existing Wetland Boundary — WLB
- Proposed Wetland Boundary — WLB
- Existing Endangered Animal Boundary — EAB
- Existing Endangered Plant Boundary — EPB
- Known Soil Contamination: Area or Site
- Potential Soil Contamination: Area or Site

BUILDINGS AND OTHER CULTURE:

- Gas Pump Vent or U/G Tank Cap
- Sign — S
- Well — W
- Small Mine
- Foundation
- Area Outline
- Cemetery
- Building
- School
- Church
- Dam

HYDROLOGY:

- Stream or Body of Water
- Hydro, Pool or Reservoir
- Jurisdictional Stream — JS
- Buffer Zone 1 — BZ 1
- Buffer Zone 2 — BZ 2
- Flow Arrow
- Disappearing Stream
- Spring
- Wetland
- Proposed Lateral, Tail, Head Ditch — FLOW
- False Sump

RAILROADS:

- Standard Gauge — CSX TRANSPORTATION
- RR Signal Milepost — MILEPOST 35
- Switch — SWITCH
- RR Abandoned
- RR Dismantled

RIGHT OF WAY:

- Baseline Control Point
- Existing Right of Way Marker
- Existing Right of Way Line
- Proposed Right of Way Line — RW
- Proposed Right of Way Line with Iron Pin and Cap Marker — RW
- Proposed Right of Way Line with Concrete or Granite Marker — RW
- Existing Control of Access — CA
- Proposed Control of Access — CA
- Existing Easement Line — E
- Proposed Temporary Construction Easement — E
- Proposed Temporary Drainage Easement — TDE
- Proposed Permanent Drainage Easement — PDE
- Proposed Permanent Drainage / Utility Easement — DUE
- Proposed Permanent Utility Easement — PUE
- Proposed Temporary Utility Easement — TUE
- Proposed Aerial Utility Easement — AUE
- Proposed Permanent Easement with Iron Pin and Cap Marker

ROADS AND RELATED FEATURES:

- Existing Edge of Pavement
- Existing Curb
- Proposed Slope Stakes Cut — C
- Proposed Slope Stakes Fill — F
- Proposed Curb Ramp — CR
- Existing Metal Guardrail
- Proposed Guardrail
- Existing Cable Guiderail
- Proposed Cable Guiderail
- Equality Symbol
- Pavement Removal

VEGETATION:

- Single Tree
- Single Shrub
- Hedge
- Woods Line
- Orchard
- Vineyard — Vineyard

EXISTING STRUCTURES:

MAJOR:

- Bridge, Tunnel or Box Culvert — CONC
- Bridge Wing Wall, Head Wall and End Wall — CONC WW

MINOR:

- Head and End Wall — CONC HW
- Pipe Culvert
- Footbridge
- Drainage Box: Catch Basin, DI or JB — CB
- Paved Ditch Gutter
- Storm Sewer Manhole — S
- Storm Sewer — S

UTILITIES:

POWER:

- Existing Power Pole
- Proposed Power Pole
- Existing Joint Use Pole
- Proposed Joint Use Pole
- Power Manhole — P
- Power Line Tower
- Power Transformer
- U/G Power Cable Hand Hole
- H-Frame Pole
- Recorded U/G Power Line — P
- Designated U/G Power Line (S.U.E.*) — P

TELEPHONE:

- Existing Telephone Pole
- Proposed Telephone Pole
- Telephone Manhole — T
- Telephone Booth
- Telephone Pedestal — T
- Telephone Cell Tower
- U/G Telephone Cable Hand Hole — HH
- Recorded U/G Telephone Cable — T
- Designated U/G Telephone Cable (S.U.E.*) — T
- Recorded U/G Telephone Conduit — TC
- Designated U/G Telephone Conduit (S.U.E.*) — TC
- Recorded U/G Fiber Optics Cable — T FO
- Designated U/G Fiber Optics Cable (S.U.E.*) — T FO

WATER:

- Water Manhole — W
- Water Meter
- Water Valve
- Water Hydrant
- Recorded U/G Water Line — W
- Designated U/G Water Line (S.U.E.*) — W
- Above Ground Water Line — A/G Water

TV:

- TV Satellite Dish
- TV Pedestal — C
- TV Tower
- U/G TV Cable Hand Hole — HH
- Recorded U/G TV Cable — TV
- Designated U/G TV Cable (S.U.E.*) — TV
- Recorded U/G Fiber Optic Cable — TV FO
- Designated U/G Fiber Optic Cable (S.U.E.*) — TV FO

GAS:

- Gas Valve
- Gas Meter
- Recorded U/G Gas Line — G
- Designated U/G Gas Line (S.U.E.*) — G
- Above Ground Gas Line — A/G Gas

SANITARY SEWER:

- Sanitary Sewer Manhole
- Sanitary Sewer Cleanout
- U/G Sanitary Sewer Line — SS
- Above Ground Sanitary Sewer — A/G Sanitary Sewer
- Recorded SS Forced Main Line — FSS
- Designated SS Forced Main Line (S.U.E.*) — FSS

MISCELLANEOUS:

- Utility Pole
- Utility Pole with Base
- Utility Located Object
- Utility Traffic Signal Box — S
- Utility Unknown U/G Line — ?UTL
- U/G Tank; Water, Gas, Oil
- Underground Storage Tank, Approx. Loc. — UST
- A/G Tank; Water, Gas, Oil
- Geoenvironmental Boring
- U/G Test Hole (S.U.E.*)
- Abandoned According to Utility Records — AATUR
- End of Information — E.O.I.

DocuSign Envelope ID: CA9E4F33-8DDF-412E-A0EA-D23883B709BC

6/2/99

PROJECT REFERENCE NO.	SHEET NO.
17BP.9.R.26	1C
DDC	

SURVEY CONTROL SHEET 79–0306

ROW MARKER CONCRETE OR GRANITE-E

ALIGN	STATION	OFFSET	NORTH	EAST
L	11+25.00	29.94	670706.9054	1554354.3711
L	11+50.00	45.00	670690.8384	1554378.7332
L	13+00.00	45.00	670684.6914	1554528.6072
L	13+25.00	29.86	670698.7975	1554554.2067

L

TYPE	STATION	NORTH	EAST
POT	10+00.00	670741.9476	1554230.7033
POT	13+85.00	670726.1703	1554615.3799

NC GRID
NAD 83/NSRS 2007

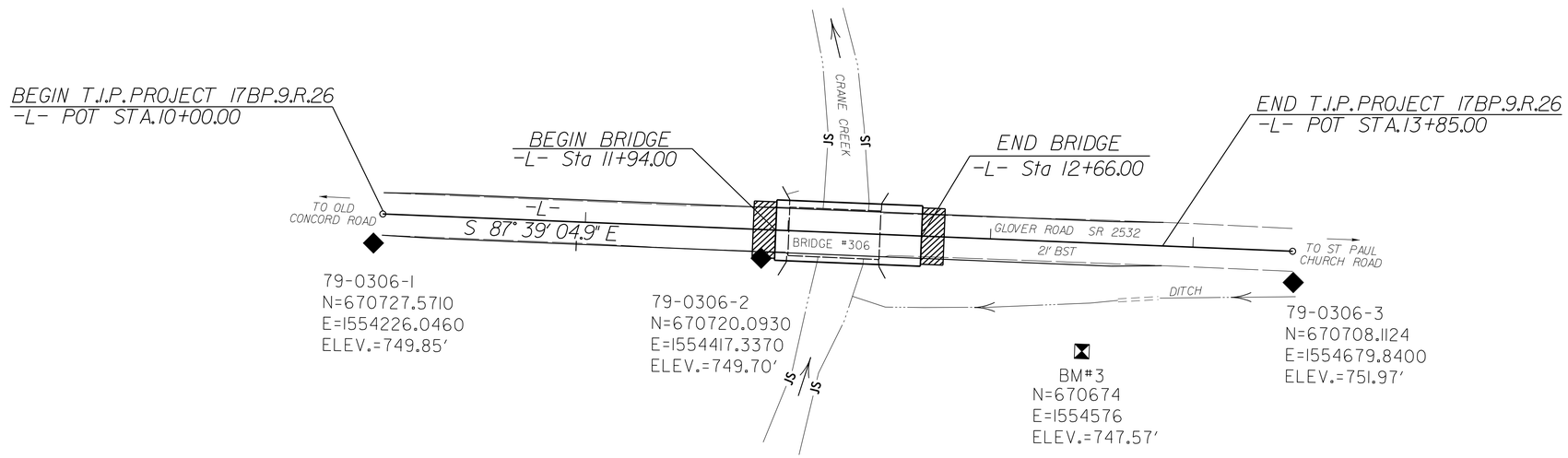

BENCHMARKS (NAVD88)
****
BM#1 ELEVATION = 747.57'
N 670674 E 1554576
L STATION 13+47 54' RIGHT
RR SPIKE IN NW ROOT OF 10" GUM
****
****

BL

POINT	DESC.	NORTH	EAST	ELEVATION	L STATION	OFFSET
1	79-0306-1	670727.5710	1554226.0460	749.85	OUTSIDE PROJECT LIMITS	
2	79-0306-2	670720.0930	1554417.3370	749.70	11+87.37	14.19 RT
3	79-0306-3	670708.1124	1554679.8400	751.97	OUTSIDE PROJECT LIMITS	

DATUM DESCRIPTION

THE LOCALIZED COORDINATE SYSTEM DEVELOPED FOR THIS PROJECT IS BASED ON THE STATE PLANE COORDINATES ESTABLISHED BY NCDOT FOR MONUMENT "79-0306-1"
WITH NAD 83/NSRS 2007 STATE PLANE GRID COORDINATES OF
NORTHING: 670727.571(ft) EASTING: 1554226.046(ft)
ELEVATION: 749.85(ft)
THE AVERAGE COMBINED GRID FACTOR USED ON THIS PROJECT (GROUND TO GRID) IS: 0.9998583663
THE N.C. LAMBERT GRID BEARING AND LOCALIZED HORIZONTAL GROUND DISTANCE FROM "79-0306-1" TO -L- STATION IS
N 17° 56' 59" E 15.11'
ALL LINEAR DIMENSIONS ARE LOCALIZED HORIZONTAL DISTANCES
VERTICAL DATUM USED IS NAVD 88

NOTES:

INDICATES GEODETIC CONTROL MONUMENTS USED OR SET FOR HORIZONTAL PROJECT CONTROL BY THE NCDOT LOCATION AND SURVEYS UNIT.

PROJECT CONTROL ESTABLISHED USING GLOBAL POSITIONING SYSTEM.

NOTE: DRAWING NOT TO SCALE

07-OCT-2014 14:20
S:\DDC\2014-17BP.9.R.26-Gibson Rd\79-0306_DDC_1C.dgn
mpowell AT DOT\D06025908

DocuSign Envelope ID: CA9E4F33-8DDF-412E-A0EA-D23883B709BC

PROJECT REFERENCE NO.	SHEET NO.
17BP.9.R.26	1D

ATKINS 1616 EAST MILLBROOK ROAD, SUITE 310
RALEIGH, NORTH CAROLINA 27609
(919) 876-6888 NCBEES #F-0326

STATE OF NORTH CAROLINA
DIVISION OF HIGHWAYS

CENTERLINE COORDINATE LIST

POINT #	CHAIN	STATION	NORTHING (Y)	EASTING (X)
1	-L-	10+00.00	670,741.95	1,554,230.70
2	-L-	10+50.00	670,739.90	1,554,280.66
3	-L-	11+00.00	670,737.85	1,554,330.62
4	-L-	11+50.00	670,735.80	1,554,380.58
5	-L-	12+00.00	670,733.75	1,554,430.54
6	-L-	12+50.00	670,731.70	1,554,480.49
7	-L-	13+00.00	670,729.65	1,554,530.45
8	-L-	13+50.00	670,727.60	1,554,580.41
9	-L-	13+85.00	670,726.17	1,554,615.38

POINT #	CHAIN	STATION	NORTHING (Y)	EASTING (X)

POINT #	CHAIN	STATION	NORTHING (Y)	EASTING (X)

POINT #	CHAIN	STATION	NORTHING (Y)	EASTING (X)

POINT #	CHAIN	STATION	NORTHING (Y)	EASTING (X)

21-MAY-2015 11:00
R:\790306\Roadway\Proj\790306_Rdy_psh_1D.dgn
$$$$USERNAME$$$$

DocuSign Envelope ID: CA9E4F33-8DDF-412E-A0EA-D23883B709BC

PROJECT REFERENCE NO.	SHEET NO.
17BP.9.R.26	2
ROADWAY DESIGN ENGINEER	PAVEMENT DESIGN ENGINEER

NORTH CAROLINA PROFESSIONAL SEAL 024929 ENGINEER CLINTON J. MORGAN

DocuSigned by: Clinton J. Morgan 8/10/2015

ECB6030461064B6...

PAVEMENT SCHEDULE

C1	PROP. APPROX. 1.5″ ASPHALT CONCRETE SURFACE COURSE, TYPE S9.5B, AT AN AVERAGE RATE OF 168 LBS. PER SQ. YD.
C2	PROP. APPROX. 3″ ASPHALT CONCRETE SURFACE COURSE, TYPE S9.5B, AT AN AVERAGE RATE OF 168 LBS. PER SQ. YD. IN EACH OF TWO 1.5″ LAYERS.
C3	PROP. VAR. DEPTH ASPHALT CONCRETE SURFACE COURSE, TYPE S9.5B, AT AN AVERAGE RATE OF 112 LBS. PER SQ. YD. PER 1″ DEPTH, TO BE PLACED IN LAYERS NOT TO EXCEED 2″ IN DEPTH.
D1	PROP. APPROX. 2.5″ ASPHALT CONCRETE INTERMEDIATE COURSE, TYPE I19.0B, AT AN AVERAGE RATE OF 285 LBS. PER SQ. YD.
D2	PROP. VAR. DEPTH ASPHALT CONCRETE INTERMEDIATE COURSE,TYPE I19.0B AT AN AVERAGE RATE OF 114 LBS. PER SQ.YD. PER 1″ DEPTH, TO BE PLACED IN LAYERS NOT LESS THAN 2.5″ OR GREATER THAN 4″ DEPTH.
E1	PROP. APPROX. 4″ ASPHALT CONCRETE BASE COURSE, TYPE B25.0B, AT AN AVERAGE RATE OF 456 LBS. PER SQ. YD.
E2	PROP. VAR. DEPTH ASPHALT CONCRETE BASE COURSE, TYPE B25.0B, AT AN AVERAGE RATE OF 114 LBS. PER SQ. YD. PER 1″ DEPTH, TO BE PLACED IN LAYERS NOT LESS THAN 4″ IN DEPTH OR GREATER THAN 5.5″ IN DEPTH.
T	EARTH MATERIAL
U	EXISTING PAVEMENT
W	VARIABLE DEPTH ASPHALT PAVEMENT (SEE WEDGING DETAIL)

NOTE: PAVEMENT EDGE SLOPES ARE 1:1 UNLESS SHOWN OTHERWISE.

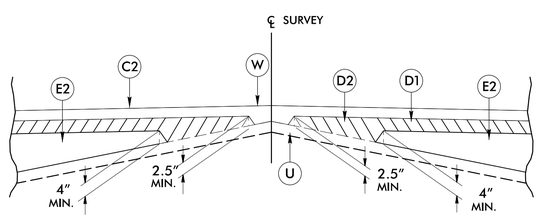

Detail Showing Method of Wedging

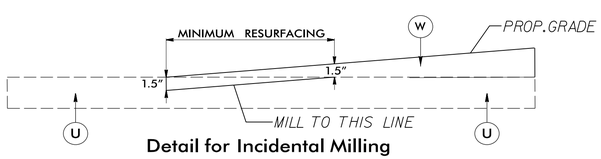

Detail for Incidental Milling

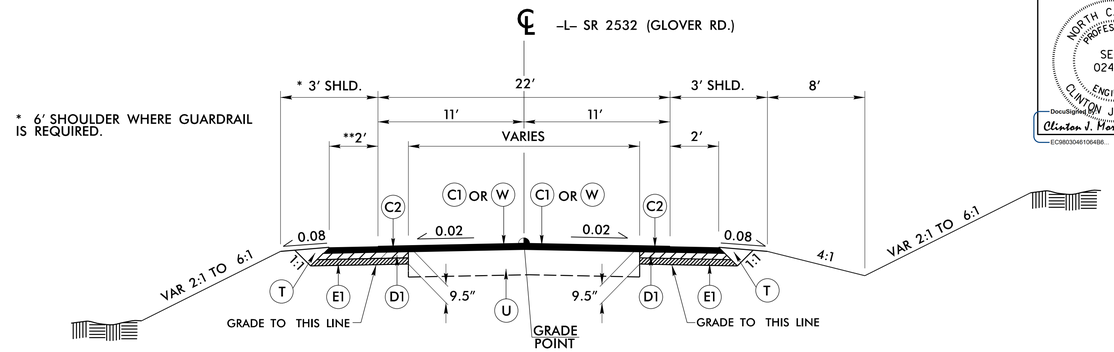

* 6′ SHOULDER WHERE GUARDRAIL IS REQUIRED.

** 3′ PAVED SHOULDER WHERE GUARDRAIL IS REQUIRED

TYPICAL SECTION NO. 1

USE TYPICAL SECTION NO. 1 AS FOLLOWS:
–L– STA. 10+25.00 TO STA. 10+75.00
–L– STA. 12+66.00 (END BRIDGE) TO STA. 13+60.00

NOTE:
TRANSITION FROM EXIST. TO T.S. NO. 1
–L– STA. 10+00.00 TO –L– STA. 10+25.00
–L– STA. 13+60.00 TO –L– STA. 13+85.00

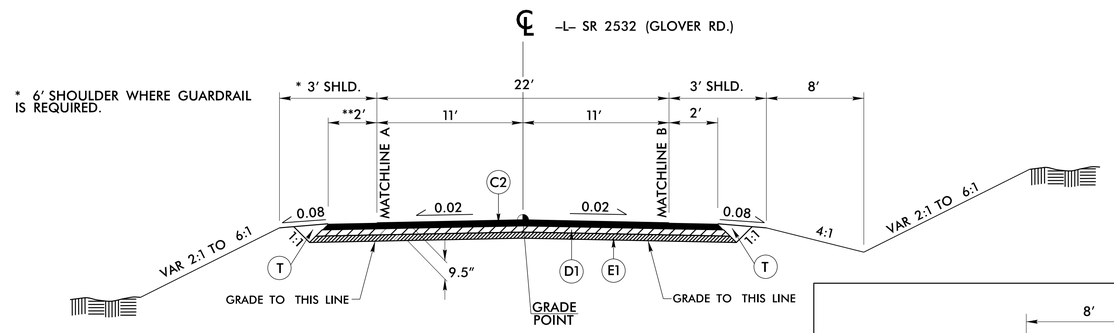

* 6′ SHOULDER WHERE GUARDRAIL IS REQUIRED.

** 3′ PAVED SHOULDER WHERE GUARDRAIL IS REQUIRED

TYPICAL SECTION NO. 2

USE TYPICAL SECTION NO. 2 AS FOLLOWS:
–L– STA. 10+75.00 TO STA. 11+94.00 (BEGIN BRIDGE)

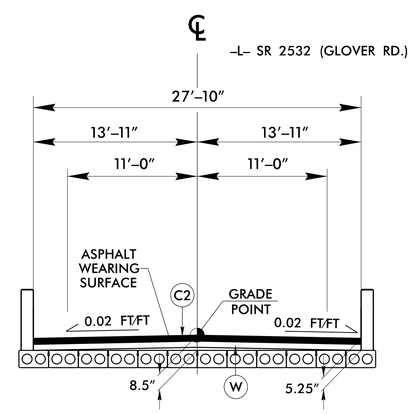

TYPICAL SECTION ON STRUCTURE

–L– STA. 11+94.00 TO STA. 12+66.00

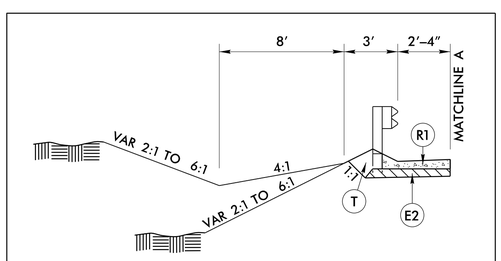

INSET 1

USE TYPICAL WITH SECTION NO. 2
–L– STA. 11+64.00 TO STA. 11+83.00

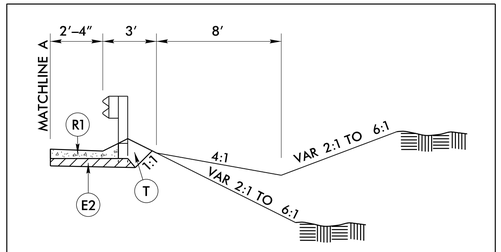

INSET 2

USE TYPICAL WITH SECTION NO. 2
–L– STA. 11+64.00 TO STA. 11+83.00

6/2/99
21-MAY-2015 11:01
R:\Roadway\Proj\7903306_Rdy_typ.dgn
$$$$USERNAME$$$$

DocuSign Envelope ID: CA9E4F33-8DDF-412E-A0EA-D23883B709BC

12/06/07

COMPUTED BY: IWB	DATE: 09-15-14
CHECKED BY: CJM	DATE: 09-15-14

STATE OF NORTH CAROLINA
DIVISION OF HIGHWAYS

PROJECT REFERENCE NO.	SHEET NO.
17BP.9.R.26	3A

SUMMARY OF EARTHWORK

STATION	STATION	UNCL. EXCAV.	UNSUIT. EXCAV.	EMBANK. +20%	BORROW	WASTE
-L- STA 10+00.00	-L- STA 11+90.91	110	81	25	0	85
-L- STA 12+55.91	-L- STA 13+85.00	11	0	7	0	4
PROJECT TOTALS:		121	81	32	0	89
RELACE TOPSOIL ON BORROW PIT (5%)					0	
GRAND TOTALS:		121	81	32	0	89
SAY:		130		40	0	90

NOTE: Approximate quantities only. Unclassified Excavation, Borrow Excavation, Shoulder Borrow, Fine Grading, Clearing and Grubbing, and Removal of Existing Pavement will be paid for at the contract lump sum price for "Grading".

PAVEMENT REMOVAL SUMMARY

SURVEY LINE	STATION	STATION	AREA (SY)
-L- (CL)	10+75	12+00	297.02
-L- (CL)	12+45	12+77	73.54
TOTAL:			370.55
SAY:			380

SHOULDER BERM GUTTER SUMMARY

SURVEY LINE	STATION	STATION	LENGTH
-L- (LT)	11+64	11+83	19'
-L- (RT)	11+64	11+83	19'
TOTAL:			38'
SAY:			40'

NOTE: Invert Elevations are for Bid Purposes only and shall not be used for project construction stakeout. See "Standard Specifications For Roads and Structures, Section 300-5".

SUB-REGIONAL & REGIONAL
LIST OF PIPES, ENDWALLS, ETC. (FOR PIPES 48" & UNDER)

STATION	SIZE / THICKNESS OR GAUGE	LOCATION (LT,RT, OR CL)	STRUCTURE NO. FROM	STRUCTURE NO. TO	TOP ELEVATION	INVERT ELEVATION	INVERT ELEVATION	SLOPE CRITICAL	DRAINAGE PIPE (RCP, CSP, CAAP, HDPE, or PVC) 12"	15"	18"	24"	30"	36"	42"	48"	DO NOT USE RCP	DO NOT USE CSP	DO NOT USE CAAP	DO NOT USE HDPE
-L- STA 11+79.50			401		749.90	747.15														
			401	402		747.15	747.03													
-L- STA 11+79.50			402		749.90	747.03														
			402	403		747.03	744.50			24										
TOTAL										24										
SAY										24										

STATION	C.S. PIPE 12"	15"	18"	24"	36"	42"	48"	R.C. PIPE (CLASS III) 15"	18"	24"	30"	36"	42"	48"	R.C. PIPE (CLASS IV) 12"	15"	18"	24"	30"	36"	42"	48"
	.064	.064	.064	.064	.079	.109	.109															
-L- STA 11+79.50																						
								28														
-L- STA 11+79.50																						
TOTAL								28														
SAY								28														

STATION	*** R. C. PIPE (CLASS V)	*** R. C. PIPE CULVERTS, CONTRACTOR DESIGN PIPE	*** R. C. PIPE CULVERTS, CONTRACTOR DESIGN PIPE	15" SIDE DRAIN PIPE	18" SIDE DRAIN PIPE	ENDWALLS STD. 838.01, STD. 838.11 OR STD. 838.80 (UNLESS NOTED OTHERWISE) CU. YDS. R.C.P.	C.S.P.	QUANTITIES FOR DRAINAGE STRUCTURES PER EACH (0' THRU 5.0')	* TOTAL L.F. FOR PAY QUANTITY SHALL BE COL. 'A' + (1.3 X COL. 'B') LIN. *FT. A: 5.0' THRU 10.0'	B: 10.0' AND ABOVE	C.B. STD. 840.01 OR STD. 840.02	FRAME, GRATES AND HOOD STANDARD 840.03 TYPE OF GRATE E	F	G	CONCRETE TRANSITIONAL SECTION CATCH BASIN	DROP INLET	G.D.I. FRAME WITH TWO GRATES STD. 840.20	T.B.D.I. STD. 840.35	G.D.I. (N.S.) FRAME WITH GRATE STD. 840.29	G.D.I. (N.S.) FRAME WITH TWO GRATES STD. 840.24	J.B. STD. 840.31 OR 840.32	CORR. STEEL ELBOWS NO. & SIZE	CONC. COLLARS CL. "B" C.Y. STD 840.72	CONC. & BRICK PIPE PLUG, C.Y. STD. 840.71	PIPE REMOVAL LIN.FT.	REMARKS
-L- STA 11+79.50								1										1	1			
-L- STA 11+79.50								1										1	1			
TOTAL								2										2	2			
SAY								2										2	2			

ABBREVIATIONS

C.B.	CATCH BASIN
N.D.I.	NARROW DROP INLET
D.I.	DROP INLET
G.D.I.	GRATED DROP INLET
G.D.I. (N.S.)	GRATED DROP INLET (NARROW SLOT)
J.B.	JUNCTION BOX
M.H.	MANHOLE
T.B.D.I.	TRAFFIC BEARING DROP INLET
T.B.J.B.	TRAFFIC BEARING JUNCTION BOX

"N" = DISTANCE FROM EDGE OF LANE TO FACE OF GUARDRAIL.
TOTAL SHOULDER WIDTH = DISTANCE FROM EDGE OF TRAVEL LANE TO SHOULDER BREAK POINT.
FLARE LENGTH = DISTANCE FROM LAST SECTION OF PARALLEL GUARDRAIL TO END OF GUARDRAIL.
W = TOTAL WIDTH OF FLARE FROM BEGINNING OF TAPER TO END OF GUARDRAIL.
G = GATING IMPACT ATTENUATOR TYPE 350
NG = NON-GATING IMPACT ATTENUATOR TYPE 350

GUARDRAIL SUMMARY

SURVEY LINE	BEG. STA.	END STA.	LOCATION	LENGTH STRAIGHT	SHOP CURVED	DOUBLE FACED	WARRANT POINT APPROACH END	TRAILING END	"N" DIST. FROM E.O.L.	TOTAL SHOUL. WIDTH	FLARE LENGTH APPROACH END	TRAILING END	W APPROACH END	TRAILING END	ANCHORS XI MOD	B-77	GRAU 350	M-350	TYPE III	CAT-1	VI MOD	BIC	AT-1	IMPACT ATTENUATOR TYPE 350 EA	G	NG	SINGLE FACED GUARDRAIL	REMOVE EXISTING GUARDRAIL	REMOVE AND STOCKPILE EXISTING GUARDRAIL	REMARKS
-L-	11+12.75	11+94.00	LT	81.25'			BRIDGE	11+12.75	3'	4'		50'		1'			1		1											
-L-	11+12.75	11+94.00	RT	81.25'			11+12.75	BRIDGE	3'	4'	50'		1'				1		1											
-L-	12+66.00	13+47.25	LT	81.25'			13+47.25	BRIDGE	3'	4'	50'		1'				1		1											
-L-	12+66.00	13+47.25	RT	81.25'			BRIDGE	13+47.25	3'	4'		50'		1'			1		1											
			SUBTOTAL	325'													4		4											
		LESS 4 GRAU-350 @ 50' EACH		200'																										
		LESS 4 TYPE-III @ 18.75' EACH		75'																										
			PROJECT TOTALS	50'													4		4											
			SAY	75'													4		4											ADDITIONAL GUARDRAIL POSTS = 5

09/JUN/2015 18:30
R:\Roadway\Proj\7902306_Rdy_psh_3A.dgn
$$$$USERNAME$$$$

DocuSign Envelope ID: CA9E4F33-8DDF-412E-A0EA-D23883B709BC

8/17/99

PROJECT REFERENCE NO.	SHEET NO.
17BP.9.R.26	4
R/W SHEET NO.	
ROADWAY DESIGN ENGINEER	HYDRAULICS ENGINEER
NORTH CAROLINA PROFESSIONAL SEAL 024929 ENGINEER CLINTON J. MORGAN	NORTH CAROLINA PROFESSIONAL SEAL 032721 ENGINEER JOHN F. OGLESBY
DocuSigned by: Clinton J. Morgan 5/10/2015 EC9803461064B6...	DocuSigned by: John F. Oglesby 5/10/2015 4BE6CE44AB9745E...

NAD 83/
NSRS 2007

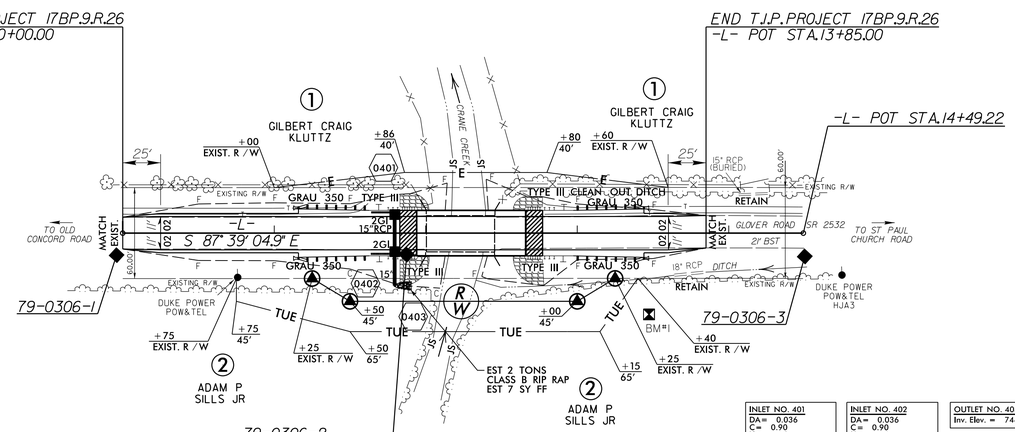

DATUM DESCRIPTION

THE LOCALIZED COORDINATE SYSTEM DEVELOPED FOR THIS PROJECT IS BASED ON THE STATE PLANE COORDINATES ESTABLISHED BY NCDOT FOR MONUMENT "79-0306-1"
WITH NAD 83/NSRS 2007 STATE PLANE GRID COORDINATES OF
NORTHING: 670727.571(ft) EASTING: 1554226.046(ft)
ELEVATION: 749.85(ft)
THE AVERAGE COMBINED GRID FACTOR USED ON THIS PROJECT (GROUND TO GRID) IS: 0.9998583663
THE N.C. LAMBERT GRID BEARING AND LOCALIZED HORIZONTAL GROUND DISTANCE FROM "79-0306-1" TO -L- STATION 10+00.00 IS 15.1121' AT A BEARING OF N 17°56'59.04"E
ALL LINEAR DIMENSIONS ARE LOCALIZED HORIZONTAL DISTANCES
VERTICAL DATUM USED IS NAVD 88

INLET NO. 401	INLET NO. 402	OUTLET NO. 403
DA= 0.036	DA= 0.036	Inv. Elev. = 744.50'
C= 0.90	C= 0.90	
Ithr= 4.0	Ithr= 4.0	
Spread= 0.0	Spread= 0.0	
Bypass= 0.0	Bypass= 0.0	
Rdwy. Grade= 0.3%	Rdwy. Grade= 0.3%	
Cross Slope= 2.0%	Cross Slope= 2.0%	
Top Elev. = 749.90'	Top Elev. = 749.90'	
Inv. Out = 747.15'	Inv. Out = 747.03'	

SBG LIMITS
-L- STA. 11+64 TO 11+83 LT
-L- STA. 11+64 TO 11+83 RT

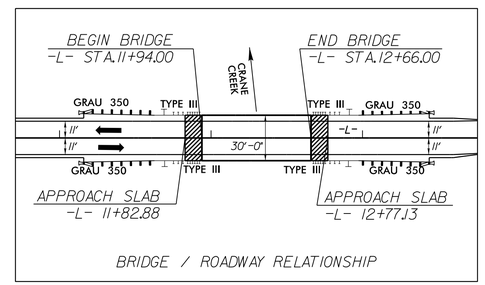

BRIDGE / ROADWAY RELATIONSHIP

BM #1 (NAVD 88)
RR SPIKE IN NW ROOT OF 10' GUM
-L- STA. 13+47.79 (53.74' RT)
N 670674 E 1554576
EL = 747.57'

STRUCTURE HYDRAULIC DATA

DESIGN DISCHARGE	= 2,200	CFS
DESIGN FREQUENCY	= 25	YRS
DESIGN HW ELEVATION	= 749.8'	FT
BASE DISCHARGE	= 3,500	CFS
BASE FREQUENCY	= 100	YRS
BASE HW ELEVATION	= 751.23'	FT
OVERTOPPING DISCHARGE	= 2500	CFS
OVERTOPPING FREQUENCY	= +25	YRS
OVERTOPPING ELEVATION	= 750.2	FT

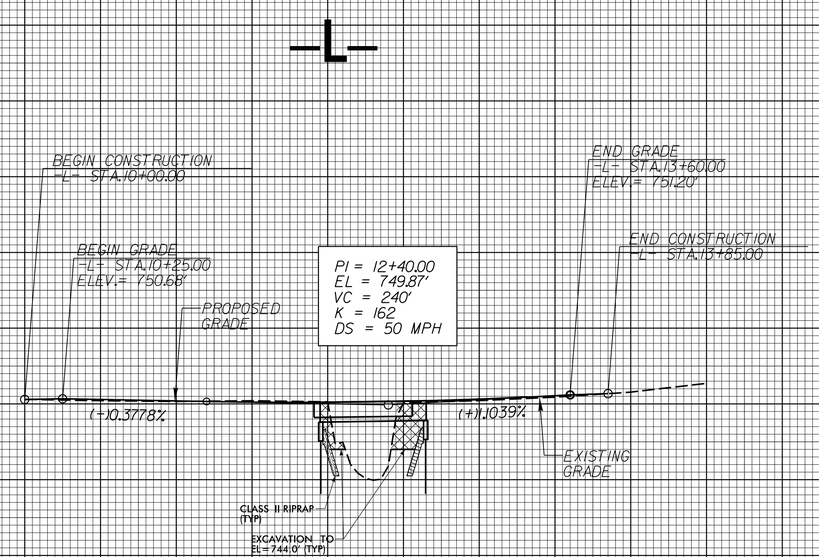

FOR STRUCTURE PLAN, SEE SHEET S-1 THRU S-13

21-MAY-2015 11:01
R:\Roadway\Proj\7903061_rdy_psh04.dgn
USERNAME = scpeterson

DocuSign Envelope ID: CA9E4F33-8DDF-412E-A0EA-D23883B709BC

PROJ. REFERENCE NO.	SHEET NO.
17BP.9.R.26	TMP-1

TIP PROJECT: 17BP.9.R.26

STATE OF NORTH CAROLINA
DIVISION OF HIGHWAYS

TRANSPORTATION MANAGEMENT PLAN

ROWAN COUNTY

BRIDGE NO. 306 OVER CRANE CREEK ON SR 2532 (GLOVER ROAD)

ROADWAY STANDARD DRAWINGS

THE FOLLOWING ROADWAY STANDARDS AS SHOWN IN "ROADWAY STANDARD DRAWINGS" - PROJECT SERVICES UNIT - N.C. DEPARTMENT OF TRANSPORTATION - RALEIGH, N.C., DATED JANUARY 2012 ARE APPLICABLE TO THIS PROJECT AND BY REFERENCE HEREBY ARE CONSIDERED A PART OF THESE PLANS:

STD. NO.	TITLE
1101.01	WORK ZONE ADVANCE WARNING SIGNS
1101.03	TEMPORARY ROAD CLOSURES
1101.04	TEMPORARY SHOULDER CLOSURES
1101.11	TRAFFIC CONTROL DESIGN TABLES
1110.01	STATIONARY WORK ZONE SIGNS
1110.02	PORTABLE WORK ZONE SIGNS
1130.01	DRUM
1135.01	CONES
1145.01	BARRICADES
1205.01	PAVEMENT MARKINGS - LINE TYPES AND OFFSETS
1205.02	PAVEMENT MARKINGS - TWO LANE AND MULTILANE ROADWAYS
1205.12	PAVEMENT MARKINGS - BRIDGES
1261.01	GUARDRAIL AND BARRIER DELINEATORS - INSTALLATION SPACING
1261.02	GUARDRAIL AND BARRIER DELINEATORS - TYPES AND MOUNTING
1262.01	GUARDRAIL END DELINEATION

INDEX OF SHEETS

SHEET NO.	TITLE
TMP-1	ROADWAY STANDARD DRAWINGS, INDEX OF SHEETS, LEGEND, GENERAL NOTES & PHASING.
TMP-2	DETOUR SIGNING

LEGEND

TRAFFIC CONTROL DEVICES

BARRICADE (TYPE III)

TEMPORARY SIGNING

STATIONARY SIGN

GENERAL NOTES

CHANGES MAY BE REQUIRED WHEN PHYSICAL DIMENSIONS IN THE DETAIL DRAWINGS, STANDARD DETAILS AND ROADWAY DETAILS ARE NOT ATTAINABLE TO MEET FIELD CONDITIONS OR RESULT IN DUPLICATE OR UNDESIRED OVERLAPPING OF DEVICES. MODIFICATION MAY INCLUDE: MOVING, SUPPLEMENTING, COVERING, OR REMOVAL OF DEVICES AS DIRECTED BY THE ENGINEERING.

THE FOLLOWING GENERAL NOTES APPLY AT ALL TIMES FOR THE DURATION OF THE CONSTRUCTION PROJECT EXCEPT WHEN OTHERWISE NOTED IN THE PLAN OR DIRECTED BY THE ENGINEER.

LANE AND SHOULDER CLOSURE REQUIREMENTS

A) REMOVE LANE CLOSURE DEVICES FROM THE LANE WHEN WORK IS NOT BEING PERFORMED BEHIND THE LANE CLOSURE OR WHEN A LANE CLOSURE IS NO LONGER NEEDED OR AS DIRECTED BY THE ENIGNEER.

B) WHEN PERSONNEL AND/OR EQUIPMENT ARE WORKING WITHIN 15 FT OF AN OPEN TRAVEL LANE, CLOSE THE NEAREST OPEN SHOULDER USING ROADWAY STANDARD DRAWING NO. 1101.04 UNLESS THE WORK AREA IS PROTECTED BY BARRIER OR GUARDRAIL OR A LANE CLOSURE IS INSTALLED.

TRAFFIC PATTERN ALTERATIONS

C) NOTIFY THE ENGINEER TWENTY ONE (21) CALENDAR DAYS PRIOR TO ANY TRAFFIC PATTERN ALTERATION.

SIGNING

D) INSTALL ADVANCED WORK ZONE WARNING SIGNS WHEN WORK IS WITHIN 40 FT FROM THE EDGE OF TRAVEL LANE AND NO MORE THAN THREE (3) DAYS PRIOR TO THE BEGINNING OF CONSTRUCTION.

E) PROVIDE SIGNING AND DEVICES REQUIRED TO CLOSE THE ROAD ACCORDING TO THE ROADWAY STANDARD DRAWINGS AND TRAFFIC CONTROL PLANS.

PROVIDE SIGNING REQUIRED FOR THE OFF-SITE DETOUR ROUTE AS SHOWN IN THE TRAFFIC CONTROL PLANS.

F) COVER OR REMOVE ALL SIGNS AND DEVICES REQUIRED TO CLOSE THE ROAD WHEN ROAD CLOSURE IS NOT IN OPERATION.

COVER OR REMOVE ALL SIGNS AND DEVICES REQUIRED FOR THE OFF-SITE DETOUR WHEN THE DETOUR IS NOT IN OPERATION.

G) ENSURE ALL NECESSARY SIGNING IS IN PLACE PRIOR TO ALTERING ANY TRAFFIC PATTERN.

TRAFFIC CONTROL DEVICES

H) PLACE TYPE III BARRICADES, WITH "ROAD CLOSED" SIGN R11-2 ATTACHED, OF SUFFICIENT LENGTH TO CLOSE ENTIRE ROAD.

PAVEMENT MARKINGS AND MARKERS

I) INSTALL PAVEMENT MARKINGS ON THE FINAL SURFACE AS FOLLOWS:

ROAD NAME	MARKING	MARKERS
SR 2532	THERMOPLASTIC	NONE

J) TIE PROPOSED PAVEMENT MARKING LINES TO EXISTING PAVEMENT MARKING LINES.

K) REMOVE/REPLACE ANY CONFLICTING/DAMAGED PAVEMENT MARKINGS.

PHASING

STEP 1: INSTALL ALL DETOUR SIGNING KEEPING SIGNS COVERED (SEE SHEET TMP-2)

STEP 2: USING ROADWAY STANDARD DRAWING 1101.03, SHEETS 1 & 2 OF 9, CLOSE SR 2532 TO TRAFFIC, UNCOVER ALL DETOUR SIGNING AND SHIFT TRAFFIC TO DETOUR (SEE SHEET TMP-2).

STEP 3: DISMANTLE AND REMOVE EXISTING BRIDGE NO. 306.

STEP 4: COMPLETE CONSTRUCTION OF PROPOSED STRUCTURE, APPROACH ROADWAY TIE-INS AND ASSOCIATED ITEMS.

STEP 5: USING ROADWAY STANDARD DRAWINGS, 1205 SERIES, PLACE FINAL PAVEMENT MARKINGS ON SR 2532 IN TWO-WAY, TWO-LANE PATTERN WITH DOUBLE YELLOW CENTERLINE. INSTALL DELINEATORS PER ROADWAY STANDARD DRAWINGS 1261 AND 1262.

STEP 6: REMOVE ALL DETOUR SIGNING, ALL TRAFFIC CONTROL DEVICES AND OPEN SR 2532 TO TRAFFIC.

ATKINS 1616 EAST MILLBROOK ROAD, SUITE 310
RALEIGH, NORTH CAROLINA 27609
(919) 876-6888 NCBEES #F-0326

APPROVED: DocuSigned by: DATE: 6/9/2015

SEAL

NORTH CAROLINA PROFESSIONAL SEAL 017586 ENGINEER J. TODD BROOKS

DIVISION OF HIGHWAYS STATE OF NORTH CAROLINA DEPARTMENT OF TRANSPORTATION WORK ZONE TRAFFIC CONTROL

ROADWAY STANDARD DRAWINGS, INDEX OF SHEETS, LEGEND, GENERAL NOTES AND PHASING

27-MAY-2015 09:52
O:\Transportation\Roadway\NCDOT\Division09 LIBRY\790306\Traffic\TrafficControl\TCPX\790306_TC_TMP_TS.dgn
BERD5650 AT LUS290293

DocuSign Envelope ID: CA9E4F33-8DDF-412E-A0EA-D23883B709BC

PROJ. REFERENCE NO.	SHEET NO.
17BP.9.R.26	TMP-2

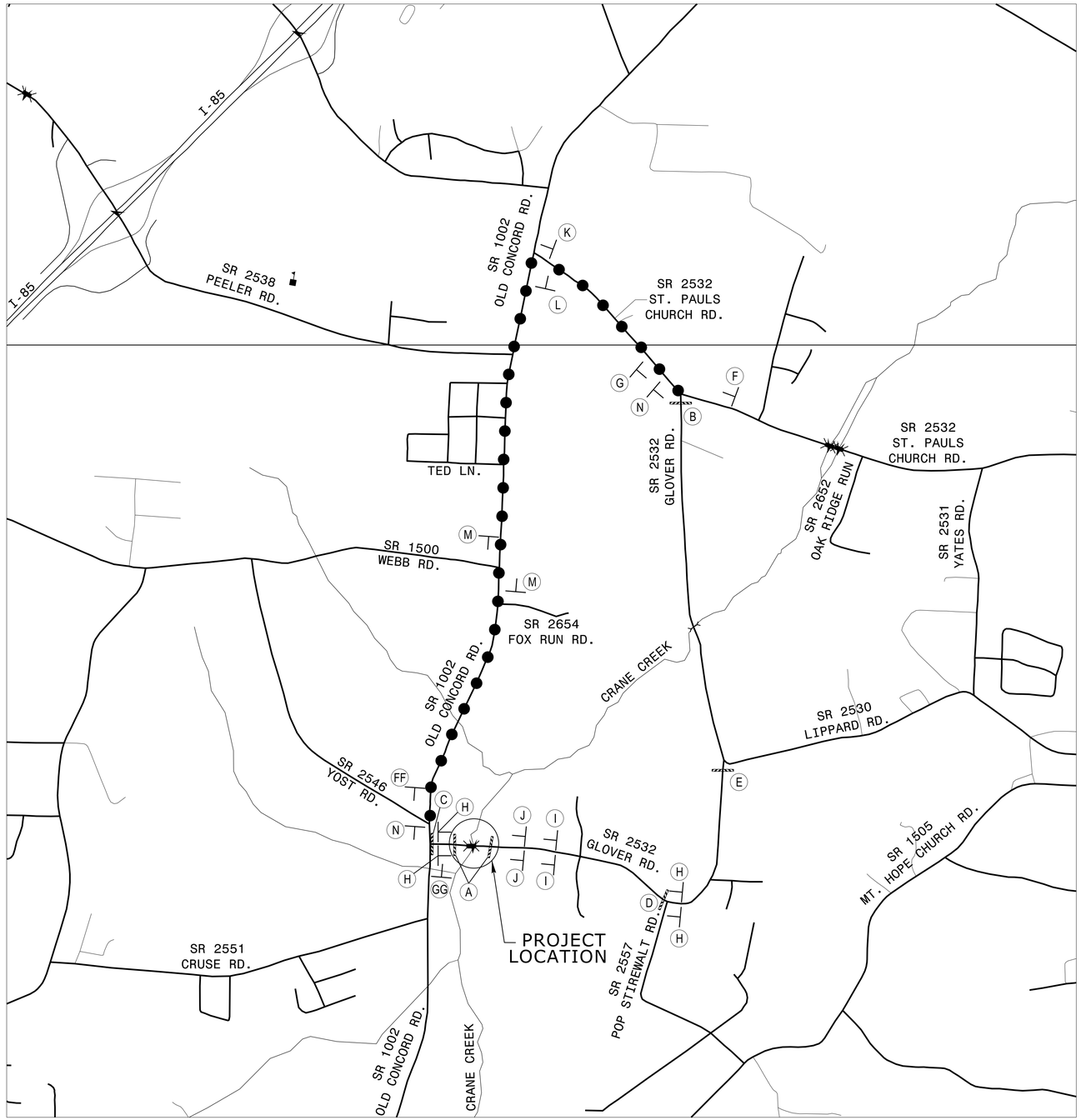

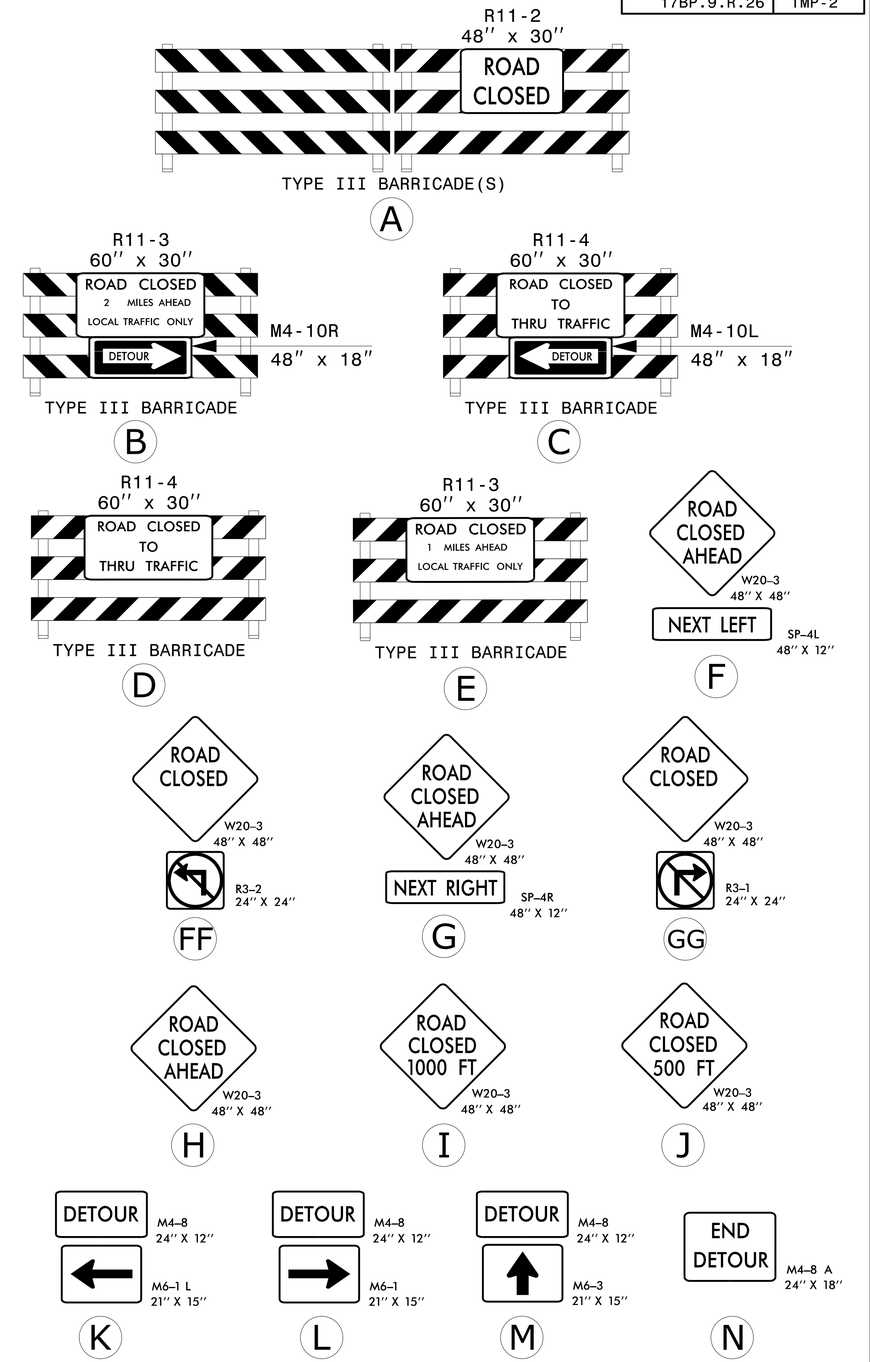

PROPOSED DETOUR	
DETOUR ROUTE	●●●●
DETOUR LENGTH	2.5 MILES

ATKINS 1616 EAST MILLBROOK ROAD, SUITE 310
RALEIGH, NORTH CAROLINA 27609
(919) 876-6888 NCBEES #F-0326

APPROVED: DocuSigned by: J. Todd Brooks 9E8BF8D8AE4E4E3... DATE: 6/9/2015

SEAL

NORTH CAROLINA PROFESSIONAL SEAL 017586 ENGINEER J. TODD BROOKS

DIVISION OF HIGHWAYS STATE OF NORTH CAROLINA DEPARTMENT OF TRANSPORTATION WORK ZONE TRAFFIC CONTROL

DETOUR SIGNING

27-MAY-2015 09:52
O:\Transportation\Roadway\NCDOT\Division09 LIBRP\790306\Traffic\TrafficControl\TCP\790306_TC_TMP_Detour.dgn
BER05650 AT LUS290293

DocuSign Envelope ID: CA9E4F33-8DDF-412E-A0EA-D23883B709BC

09/08/99

TIP PROJECT: 17BP.9.R.26

STATE	STATE PROJECT REFERENCE NO.	SHEET NO.	TOTAL SHEETS
N.C.	17BP.9.R.26	EC-1	

W.B.S. NO.	F.A. PROJ. NO.	DESCRIPTION

STATE OF NORTH CAROLINA
DIVISION OF HIGHWAYS

ROWAN COUNTY

PLAN FOR PROPOSED HIGHWAY EROSION CONTROL

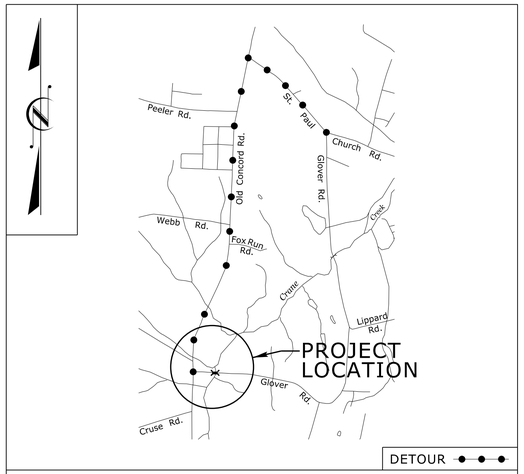

VICINITY MAP

LOCATION: BRIDGE NO. 306 OVER CRANE CREEK ON SR 2532 (GLOVER ROAD)
TYPE OF WORK: WIDENING, GRADING, PAVING, DRAINAGE, AND STRUCTURE

ROADSIDE ENVIRONMENTAL UNIT
DEPARTMENT OF TRANSPORTATION
DIVISION OF HIGHWAYS
RALEIGH, N.C.

2012 STANDARD SPECIFICATIONS

NOTES: ANY DEVIATION FROM OPTIONS GIVEN WILL REQUIRE PRIOR APPROVAL BY ENGINEER.

ADDITIONAL EROSION CONTROL DEVICES MAY NEED TO BE INSTALLED AS DIRECTED BY THE ENGINEER.

EROSION AND SEDIMENT CONTROL MEASURES

Std. #	Description	Symbol
1630.03	Temporary Silt Ditch	TSD
1630.05	Temporary Diversion	TD
1605.01	Temporary Silt Fence	
1606.01	Special Sediment Control Fence	
1622.01	Temporary Berms and Slope Drains	
1630.02	Silt Basin Type B	
1633.01	Temporary Rock Silt Check Type-A	
	Temporary Rock Silt Check Type-A with Matting and Polyacrylamide (PAM)	
1633.02	Temporary Rock Silt Check Type-B	
	Wattle/ Coir Fiber Wattle	SW CFW
	Wattle/ Coir Fiber Wattle with Polyacrylamide (PAM)	
1634.01	Temporary Rock Sediment Dam Type-A	
1634.02	Temporary Rock Sediment Dam Type-B	
1635.01	Rock Pipe Inlet Sediment Trap Type-A	
1635.02	Rock Pipe Inlet Sediment Trap Type-B	
1630.04	Stilling Basin	
1630.06	Special Stilling Basin	
	Rock Inlet Sediment Trap:	
1632.01	Type A	A
1632.02	Type B	B
1632.03	Type C	C
	Skimmer Basin	
	Tiered Skimmer Basin	
	Infiltration Basin	

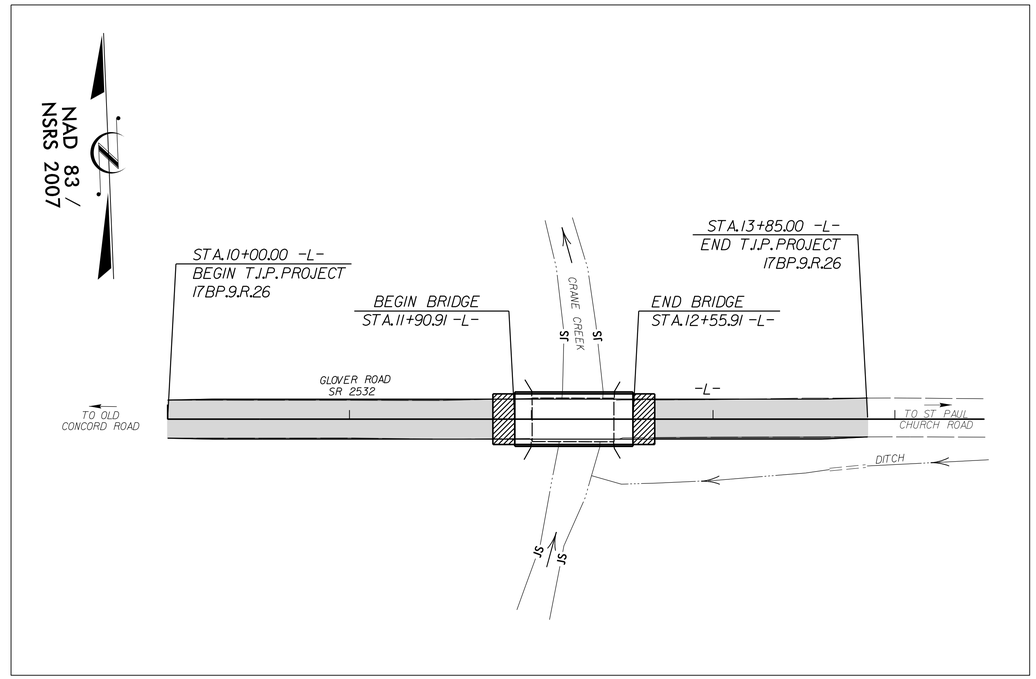

THIS PROJECT CONTAINS EROSION CONTROL PLANS FOR CLEARING AND GRUBBING PHASE OF CONSTRUCTION.

ENVIRONMENTALLY SENSITIVE AREA(S) EXIST ON THIS PROJECT

Refer To E. C. Special Provisions for Special Considerations.

CLEARING ON THIS PROJECT SHALL BE PERFORMED TO THE LIMITS ESTABLISHED BY METHOD III

GRAPHIC SCALES

50 25 0 50 100
PLANS

50 25 0 50 100
PROFILE (HORIZONTAL)

10 5 0 10 20
PROFILE (VERTICAL)

ROADSIDE ENVIRONMENTAL UNIT
DIVISION OF HIGHWAYS
STATE OF NORTH CAROLINA

STATE OF NORTH CAROLINA DEPARTMENT OF TRANSPORTATION

P.E.
ENGINEER APPROVAL

PROJECT LENGTH

LENGTH ROADWAY T.I.P. PROJECT 17BP.9.R.26	=	0.061 MILES
LENGTH STRUCTURES T.I.P. PROJECT 17BP.9.R.26	=	0.012 MILES
TOTAL LENGTH T.I.P. PROJECT 17BP.9.R.26	=	0.073 MILES

Prepared in the Office of:
ATKINS
5200 77 CENTER DRIVE, SUITE 500
CHARLOTTE, NORTH CAROLINA 28217
(704) 522-7275

2012 STANDARD SPECIFICATIONS

RIGHT OF WAY DATE:
OCTOBER 2014

LETTING DATE:
JUNE 2015

JOHN OGLESBY, P.E.
IIIA CERT. # 3308
PROJECT ENGINEER

MICHAEL BAREFOOT, P.E.
PROJECT DESIGN ENGINEER

MATTHEW JONES, P.E.
NCDOT CONTACT

Roadway Standard Drawings

The following roadway English standards as appear in "Roadway Standard Drawings"– Roadway Design Unit – N. C. Department of Transportation – Raleigh, N. C., dated January 2012 and the latest revison thereto are applicable to this project and by reference hereby are considered a part of these plans.

1604.01	Railroad Erosion Control Detail	1632.01	Rock Inlet Sediment Trap Type A
1605.01	Temporary Silt Fence	1632.02	Rock Inlet Sediment Trap Type B
1606.01	Special Sediment Control Fence	1632.03	Rock Inlet Sediment Trap Type C
1607.01	Gravel Construction Entrance	1633.01	Temporary Rock Silt Check Type A
1622.01	Temporary Berms and Slope Drains	1633.02	Temporary Rock Silt Check Type B
1630.01	Riser Basin	1634.01	Temporary Rock Sediment Dam Type A
1630.02	Silt Basin Type B	1634.02	Temporary Rock Sediment Dam Type B
1630.03	Temporary Silt Ditch	1635.01	Rock Pipe Inlet Sediment Trap Type A
1630.04	Stilling Basin	1635.02	Rock Pipe Inlet Sediment Trap Type B
1630.05	Temporary Diversion	1640.01	Coir Fiber Baffle
1630.06	Special Stilling Basin	1645.01	Temporary Stream Crossing
1631.01	Matting Installation		

20-MAY-2015 16:43
R:\790306\Hydraulics\CADD\PSH\790306_Rdy_EC_tsh.dgn
$$$$USERNAME$$$$

DocuSign Envelope ID: CA9E4F33-8DDF-412E-A0EA-D23883B709BC

5/14/99

PROJECT REFERENCE NO.	SHEET NO.
17BP.9.R.26	EC-2
R/W SHEET NO.	
ROADWAY DESIGN ENGINEER	HYDRAULICS ENGINEER

NORTH CAROLINA PROFESSIONAL SEAL 032721 ENGINEER JOHN F. OGLESBY

DocuSigned by: John F. Oglesby 6/10/2015
4BE6CE44AB9745E...

SILT FENCE WATTLE BREAK DETAIL

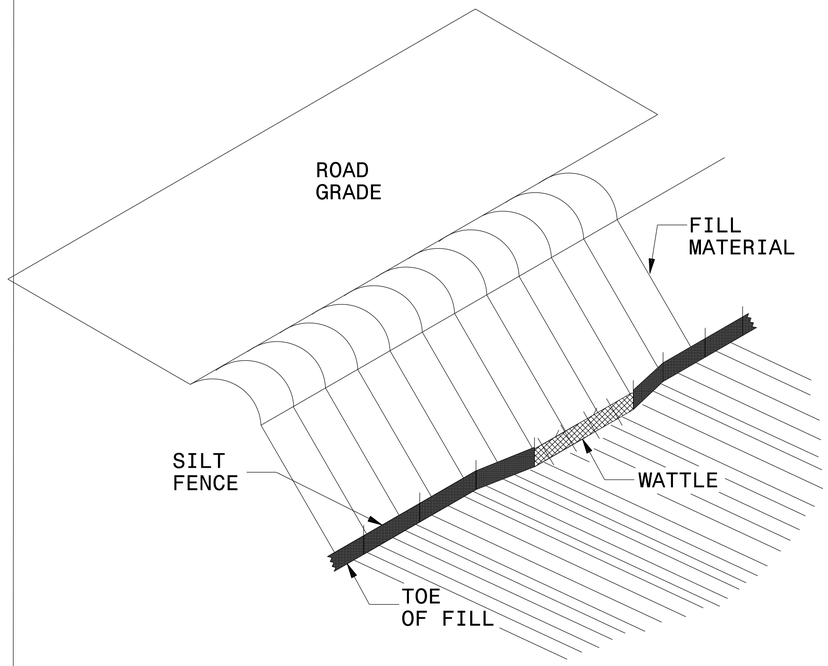

ISOMETRIC VIEW

NOTES:

USE MINIMUM 12 IN. DIAMETER EXCELSIOR WATTLE AND LENGTH OF 10 FT.

EXCAVATE A 1 TO 2 INCH TRENCH FOR WATTLE TO BE PLACED.

DO NOT PLACE WATTLE ON TOE OF SLOPE.

USE 2 FT. WOODEN STAKES WITH A 2 IN. BY 2 IN. NOMINAL CROSS SECTION.

INSTALL A MINIMUM OF 2 UPSLOPE STAKES AND 4 DOWNSLOPE STAKES AT AN ANGLE TO WEDGE WATTLE TO GROUND.

PROVIDE STAPLES MADE OF 0.125 IN. DIAMETER STEEL WIRE FORMED INTO A U SHAPE NOT LESS THAN 12″ IN LENGTH.

INSTALL STAPLES APPROXIMATELY EVERY 1 LINEAR FOOT ON BOTH SIDES OF WATTLE AND AT EACH END TO SECURE IT TO THE SOIL.

WATTLE INSTALLATION CAN BE ON OUTSIDE OF THE SILT FENCE AS DIRECTED.

INSTALL TEMPORARY SILT FENCE IN ACCORDANCE WITH SECTION 1605 OF THE STANDARD SPECIFICATIONS.

INSET A

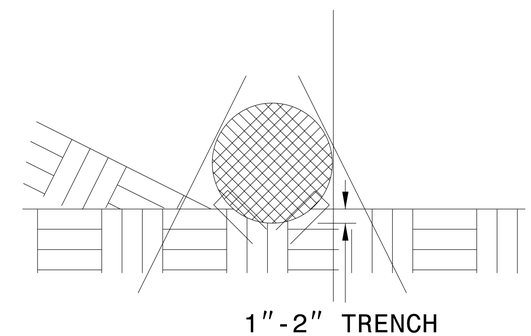

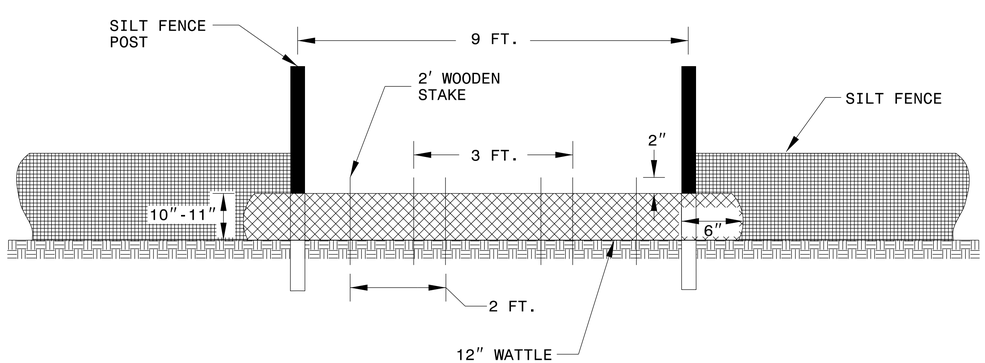

VIEW FROM SLOPE

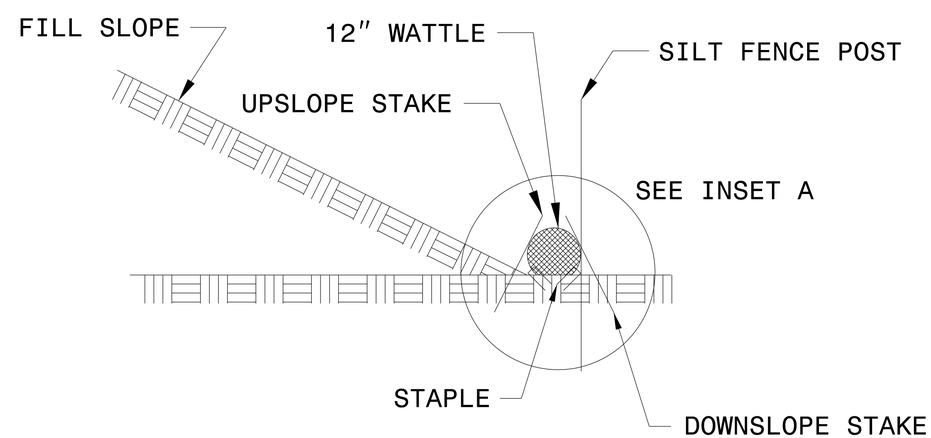

SIDE VIEW

$$$$SYSTIME$$$$
$$$$TIME$$$$
$$$$USERNAME$$$$
$$$$DGN$$$$

DocuSign Envelope ID: CA9E4F33-8DDF-412E-A0EA-D23883B709BC

PROJECT REFERENCE NO.	SHEET NO.
17BP.9.R.26	EC-3
R/W SHEET NO.	

HYDRAULICS ENGINEER

NORTH CAROLINA PROFESSIONAL SEAL 032721 ENGINEER JOHN F. OGLESBY

DocuSigned by: John F. Oglesby 6/10/2015

4BE6CE44AB9745E...

STATE OF NORTH CAROLINA
DIVISION OF HIGHWAYS

SOIL STABILIZATION TIMEFRAMES

SITE DESCRIPTION	STABILIZATION TIME	TIMEFRAME EXCEPTIONS
PERIMETER DIKES, SWALES, DITCHES, AND SLOPES	7 DAYS	NONE
HIGH QUALITY WATER (HQW) ZONES	7 DAYS	NONE
SLOPES STEEPER THAN 3:1	7 DAYS	IF SLOPES ARE 10' OR LESS IN LENGTH AND ARE NOT STEEPER THAN 2:1, 14 DAYS ARE ALLOWED
SLOPES 3:1 OR FLATTER	14 DAYS	7 DAYS FOR SLOPES GREATER THAN 50' IN LENGTH
ALL OTHER AREAS WITH SLOPES FLATTER THAN 4:1	14 DAYS	NONE, EXCEPT FOR PERIMETERS AND HQW ZONES

5/14/99
20-MAY-2015 16:43
\790306\Hydraulics\CADD\PSH\790306_Rdy_EC_tsh.dgn
$$$$USERNAME$$$$

DocuSign Envelope ID: CA9E4F33-8DDF-412E-A0EA-D23883B709BC

8/17/99

PROJECT REFERENCE NO.	SHEET NO.
17BP.9.R.26	EC-4
R/W SHEET NO.	

HYDRAULICS ENGINEER

NORTH CAROLINA PROFESSIONAL SEAL 032721 ENGINEER JOHN F. OGLESBY

DocuSigned by: John F. Oglesby 6/10/2015

4BE6CE44AB9745E...

ROWAN COUNTY
BRIDGE # 790306

ENVIRONMENTALLY SENSITIVE AREA
SEE PROJECT SPECIAL PROVISIONS

NAD 83/
NSRS 2007

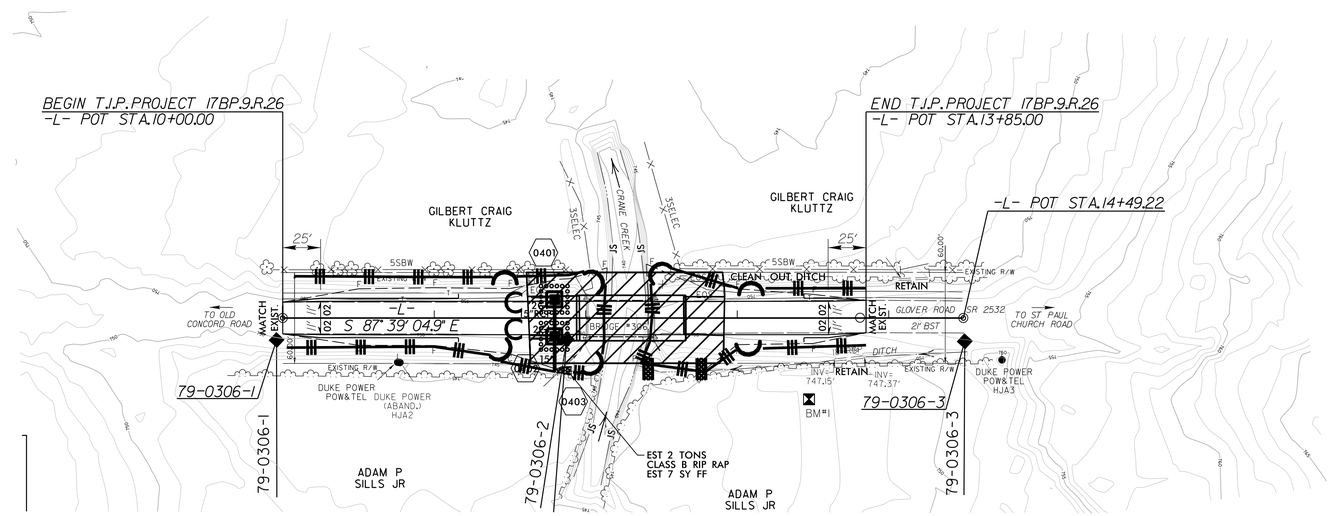

NOTES:

1. TEMPORARY SILT FENCE SHALL BE INSTALLED A MINIMUM OF 3 FEET FROM TOE OF FILL IN WETLAND AREAS
2. SPECIAL STILLING BASINS REQUIRED FOR DRILLED SHAFTS.
3. SHEET REPRESENTS CLEAR AND GRUBBING, AS WELL AS FINAL EROSION CONTROL FOR CONSTRUCTION SHEET 4.

BM #1 (NAVD 88)
RR SPIKE IN NW ROOT OF 10' GUM
-L- STA. 13+47.79 (53.74' RT)
N 670674 E 1554576
EL = 747.57'

STRUCTURE HYDRAULIC DATA

DESIGN DISCHARGE	= 2,200	CFS
DESIGN FREQUENCY	= 25	YRS
DESIGN HW ELEVATION	= 749.8'	FT
BASE DISCHARGE	= 3,500	CFS
BASE FREQUENCY	= 100	YRS
BASE HW ELEVATION	= 751.23'	FT
OVERTOPPING DISCHARGE	= 2500	CFS
OVERTOPPING FREQUENCY	= +25	YRS
OVERTOPPING ELEVATION	= 750.2	FT

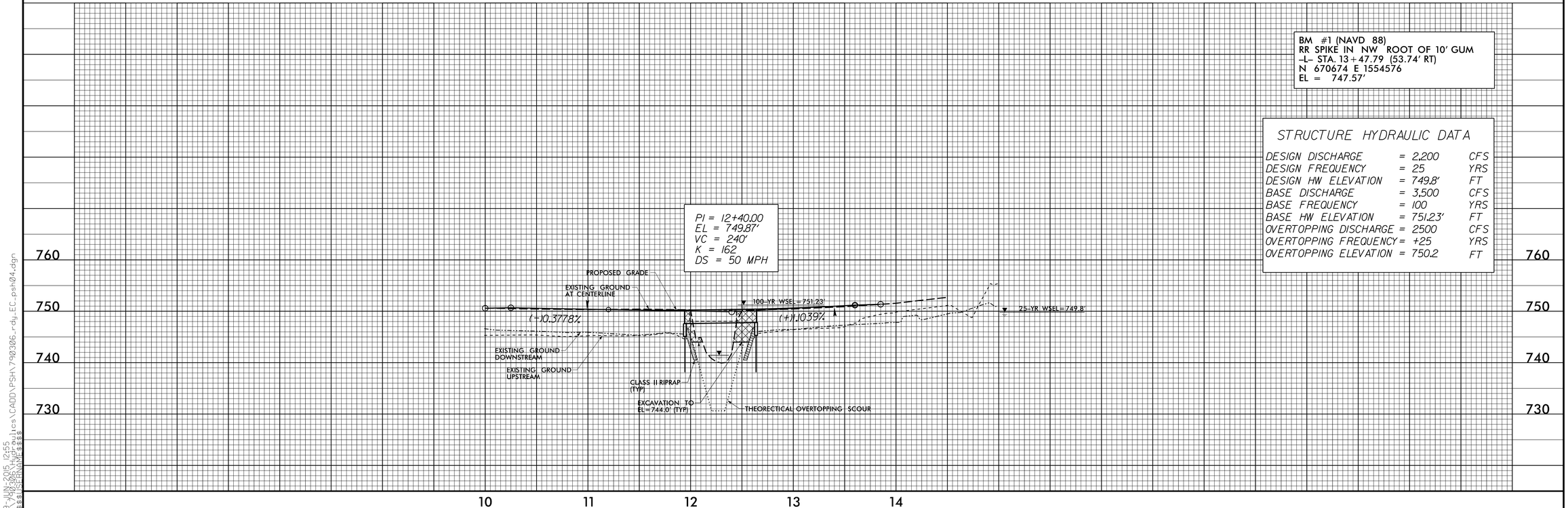

09-JUN-2015 12:55
R:\790306\Hydraulics\CADD\PSH\790306_rdy_EC_psh04.dgn
$$$$USERNAME$$$$

DocuSign Envelope ID: CA9E4F33-8DDF-412E-A0EA-D23883B709BC

TIP PROJECT: 17BP.9.R.26

STATE	STATE PROJECT REFERENCE NO.	SHEET NO.	TOTAL SHEETS
N.C.	17BP.9.R.26	UO-1	2

STATE OF NORTH CAROLINA
DIVISION OF HIGHWAYS

UTILITIES BY OTHERS PLANS
ROWAN COUNTY

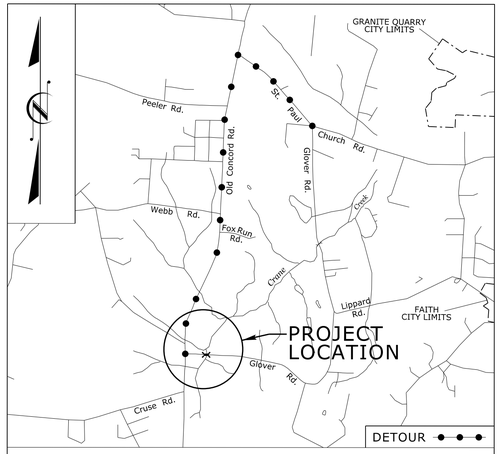

VICINITY MAP

LOCATION: BRIDGE NO. 306 OVER CRANE CREEK ON SR 2532 (GLOVER ROAD)

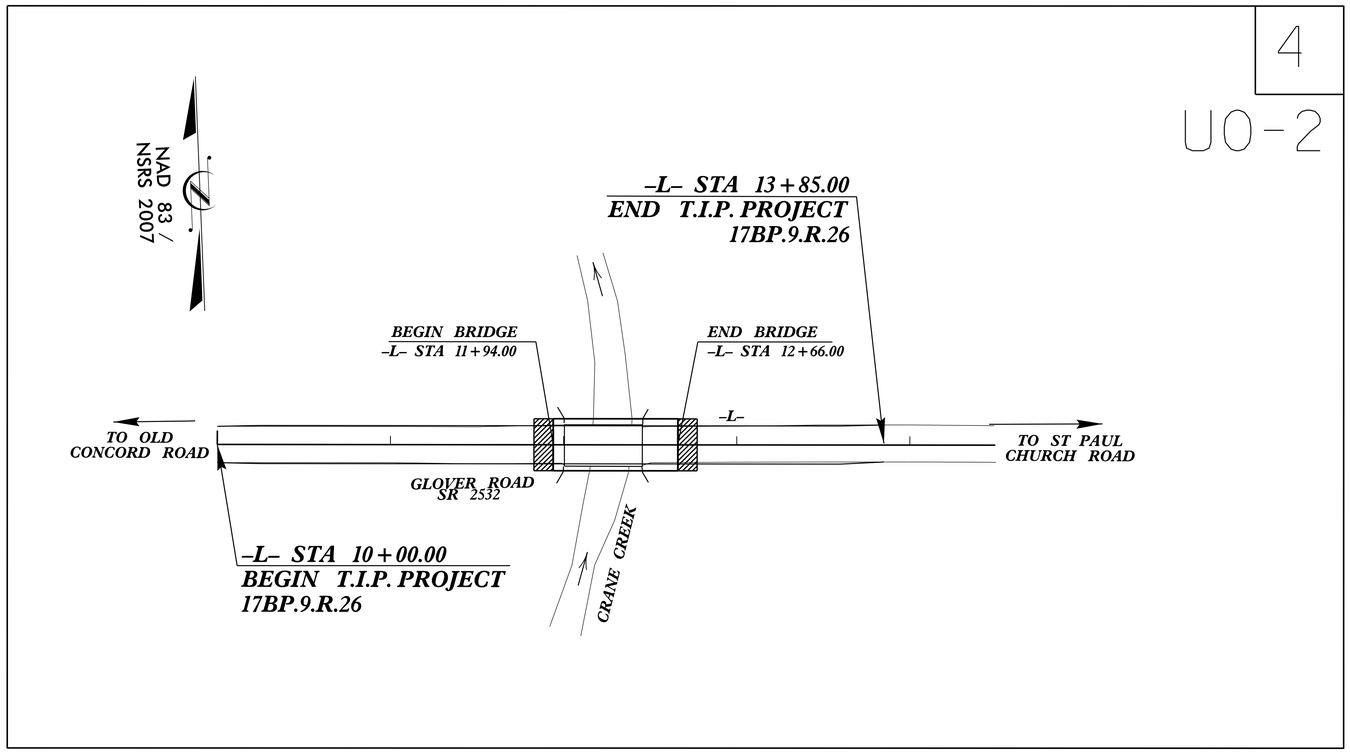

GRAPHIC SCALES

50 25 0 50 100
PLANS

INDEX OF UTILITY SHEETS

SHEET NO.	DESCRIPTION
UO-1	TITLE SHEET
UO-2	UTILITY PLAN SHEETS

UTILITY OWNERS

POWER – DUKE ENERGY PROGRESS
TEL/FO – AT&T

11-SEP-2014 14:41
R:\790306\Utilities\17BP.3.R.26_UO_tsh.dgn
CHAP5535 AT DUS29037

DocuSign Envelope ID: CA9E4F33-8DDF-412E-A0EA-D23883B709BC

8/17/99

PROJECT REFERENCE NO.	SHEET NO.
17BP.9.R.26	UO-2
UTILITY BY OTHERS PLANS	

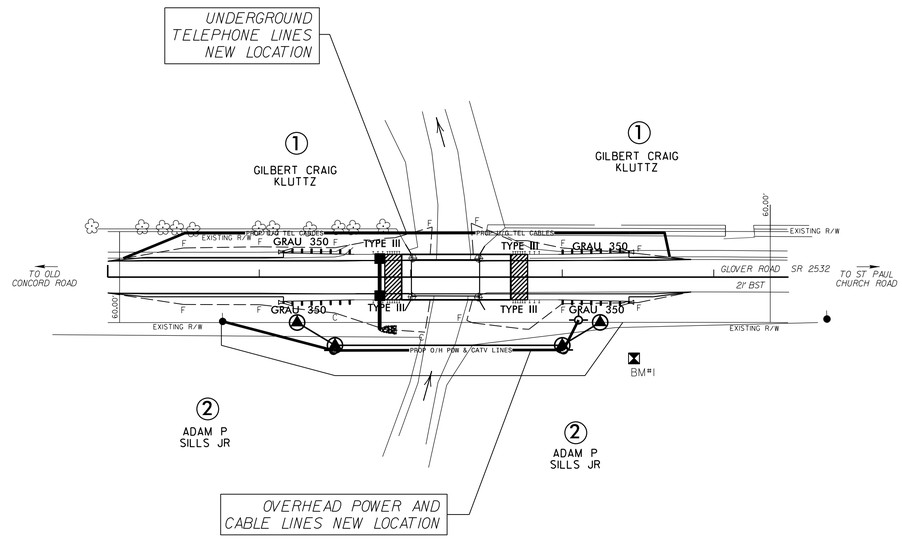

NAD 83/ NSRS 2007

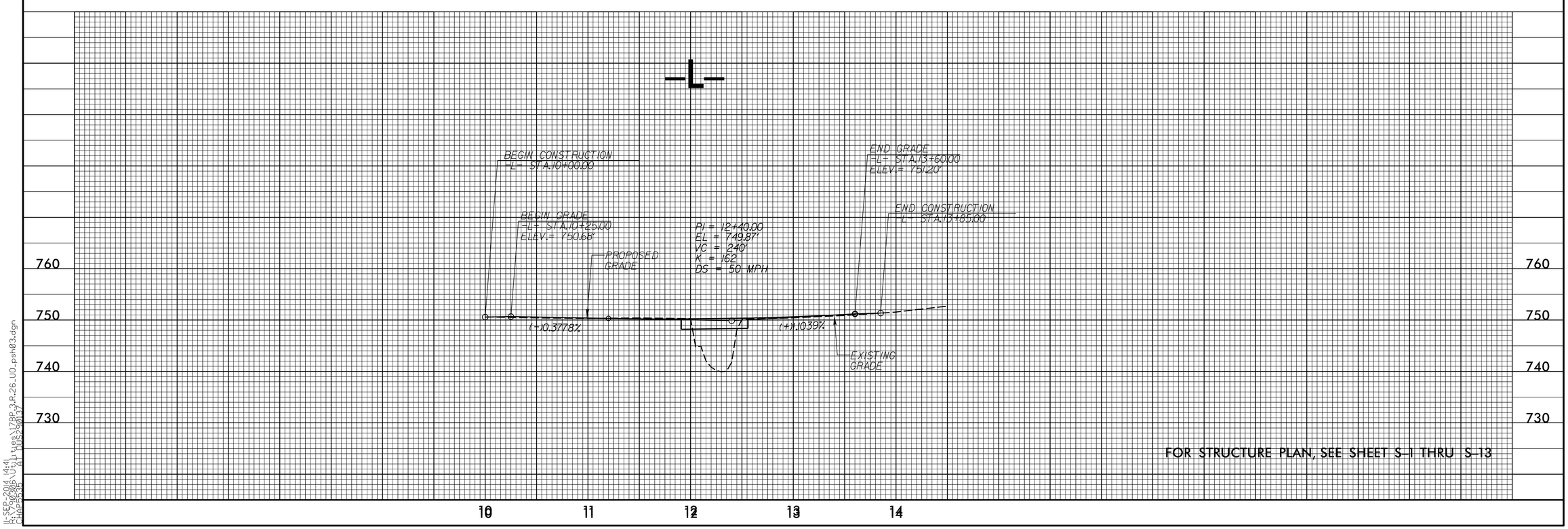

FOR STRUCTURE PLAN, SEE SHEET S-1 THRU S-13

11-SEP-2014 14:41
R:\790306\Utilities\17BP.3.R.26_UO_psh03.dgn
CHAP5535 AT DUS290137

DocuSign Envelope ID: CA9E4F33-8DDF-412E-A0EA-D23883B709BC

PROJ. REFERENCE NO.	SHEET NO.
17BP.9.R.26	X-0

STATE OF NORTH CAROLINA
DIVISION OF HIGHWAYS

CROSS SECTON INDEX SHEET

Chain	Beg Sta	End Sta	LOC	Sheet No.	Comments / Log File
-L-	10+00.00	14+00.00		X-1 TO X-3	

Chain	Beg Sta	End Sta	LOC	Sheet No.	Comments / Log File

DocuSign Envelope ID: CA9E4F33-8DDF-412E-A0EA-D23883B709BC

PROJ. REFERENCE NO.	SHEET NO.
17BP.9.R.26	X–0A

STATE OF NORTH CAROLINA
DIVISION OF HIGHWAYS

NOTE: Embankment does not include backfill for undercut.

CROSS-SECTION SUMMARY

Station -L-	Uncl. Exc. (cu. yd.)	Undercut (cu. yd.)	Embt (cu. yd.)	Station	Uncl. Exc. (cu. yd.)	Undercut (cu. yd.)	Embt (cu. yd.)	Station	Uncl. Exc. (cu. yd.)	Undercut (cu. yd.)	Embt (cu. yd.)	Station	Uncl. Exc. (cu. yd.)	Undercut (cu. yd.)	Embt (cu. yd.)
10+00.00	0	0	0												
10+50.00	6	0	4												
11+00.00	19	0	5												
11+50.00	41	0	6												
12+00.00	0	0	0												
12+50.00	0	0	0												
13+00.00	2	0	2												
13+50.00	7	0	4												
14+00.00	0	0	0												

NOTE: Approximate quantities only. Unclassified Excavation, Borrow Excavation, Shoulder Borrow, Fine Grading, Clearing and Grubbing, and Removal of Existing Pavement will be paid for at the contract lump sum price for "Grading".

DocuSign Envelope ID: CA9E4F33-8DDF-412E-A0EA-D23883B709BC

PROJ. REFERENCE NO.	SHEET NO.
17BP.9.R.26	X-1

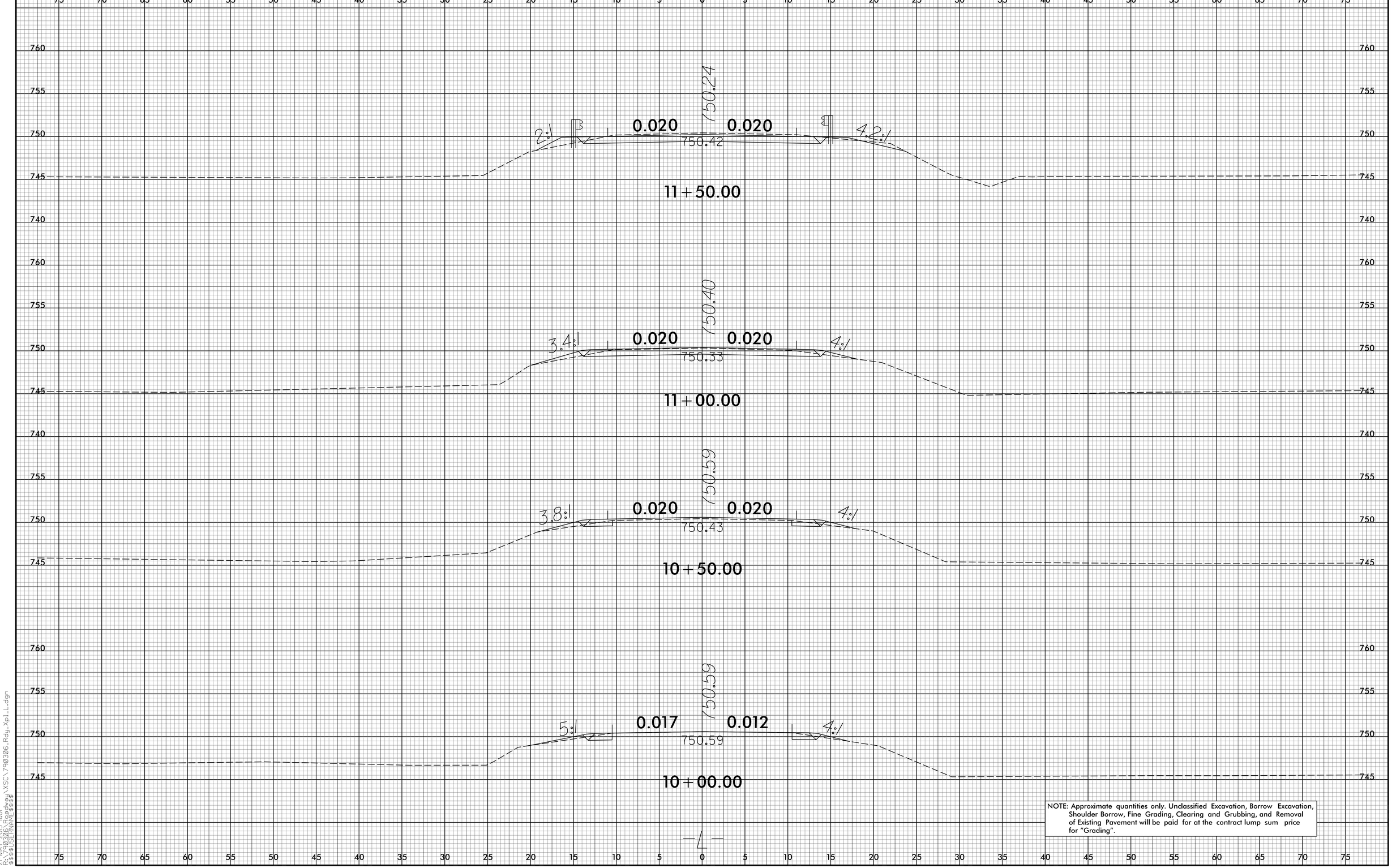

NOTE: Approximate quantities only. Unclassified Excavation, Borrow Excavation, Shoulder Borrow, Fine Grading, Clearing and Grubbing, and Removal of Existing Pavement will be paid for at the contract lump sum price for "Grading".

8/23/99
21-MAY-2015 11:01
R:\790306\Roadway\XSC\790306_Rdy_Xpl_L.dgn
$$$$USERNAME$$$$

DocuSign Envelope ID: CA9E4F33-8DDF-412E-A0EA-D23883B709BC

PROJ. REFERENCE NO.	SHEET NO.
17BP.9.R.26	X-2

0 2.5 5

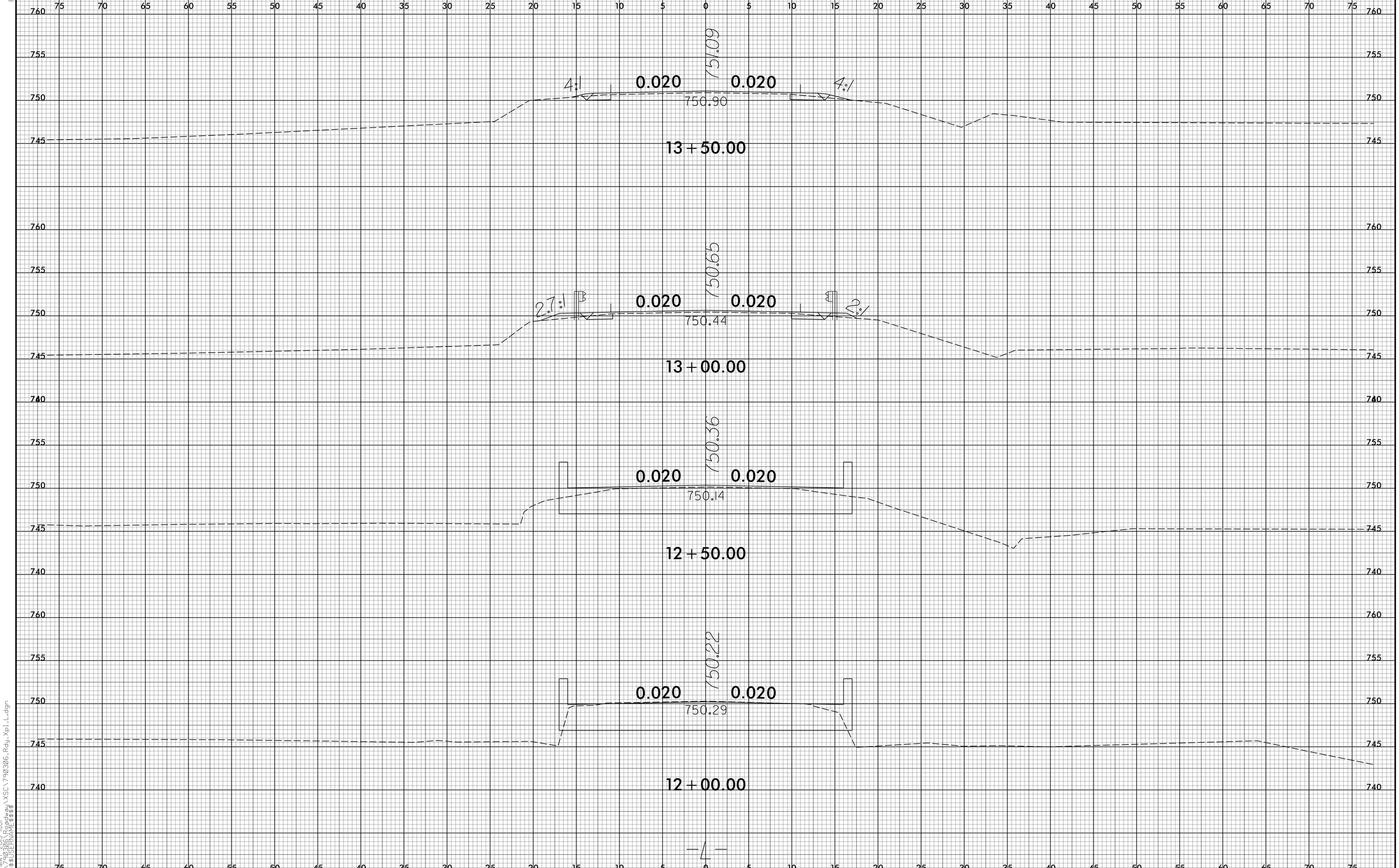

8/23/99
21-MAY-2015 14:01
R:\790306\Rodney\XSC\790306_Rdy_Xpl1L.dgn
$$$$USERNAME$$$$

DocuSign Envelope ID: CA9E4F33-8DDF-412E-A0EA-D23883B709BC

8/23/99

0 2.5 5	PROJ. REFERENCE NO.	SHEET NO.
	17BP.9.R.26	X-3

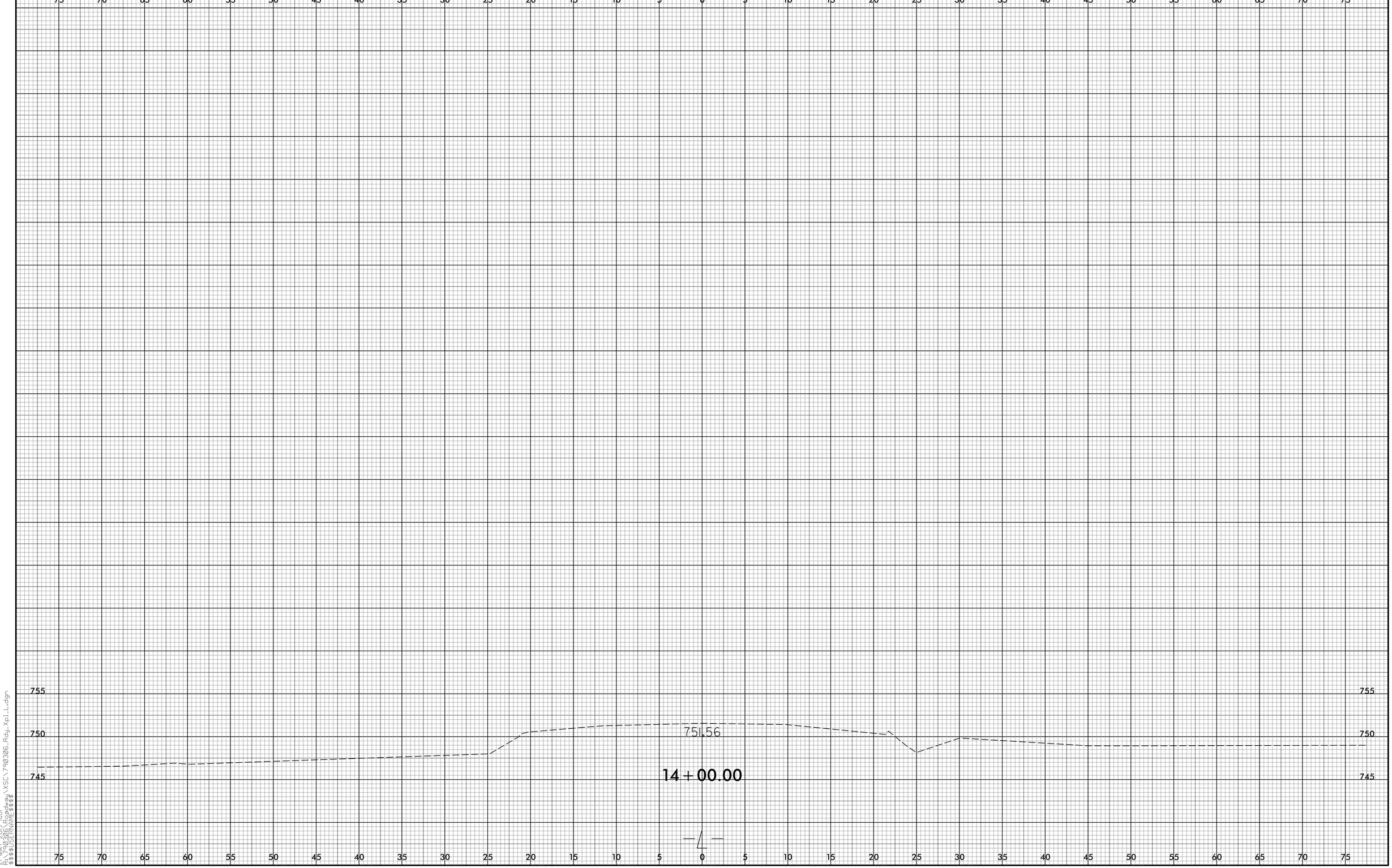

21-MAY-2015 11:01
R:\790306\Roadway\XSC\790306_Rdy_Xpl_L.dgn
$$$$USERNAME$$$$

DocuSign Envelope ID: CA9E4F33-8DDF-412E-A0EA-D23883B709BC

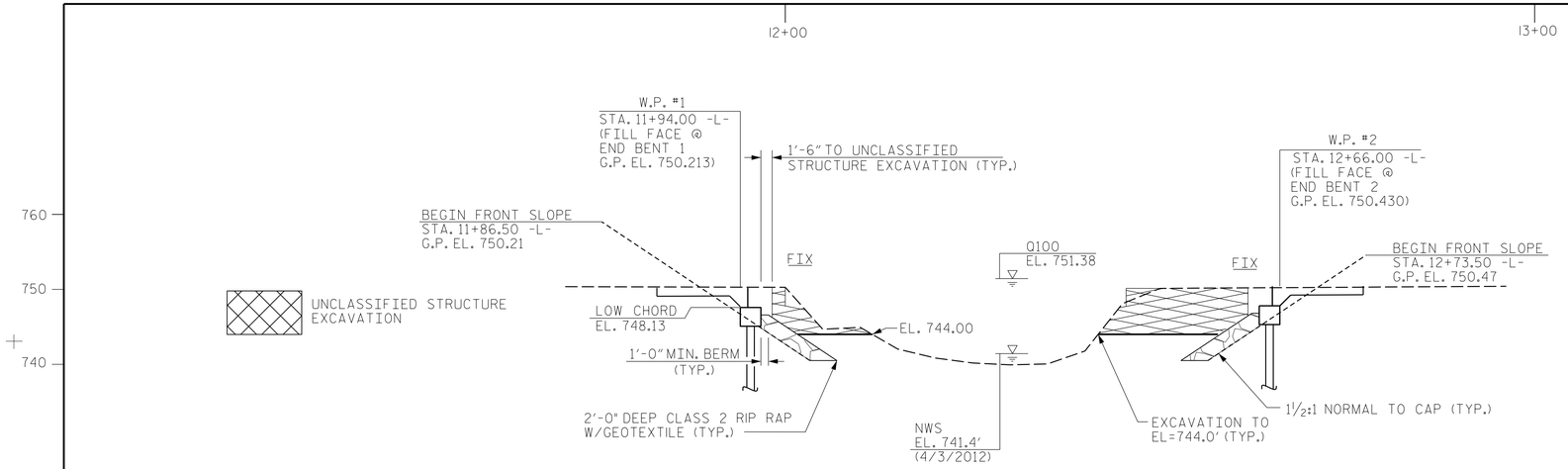

SECTION ALONG -L-

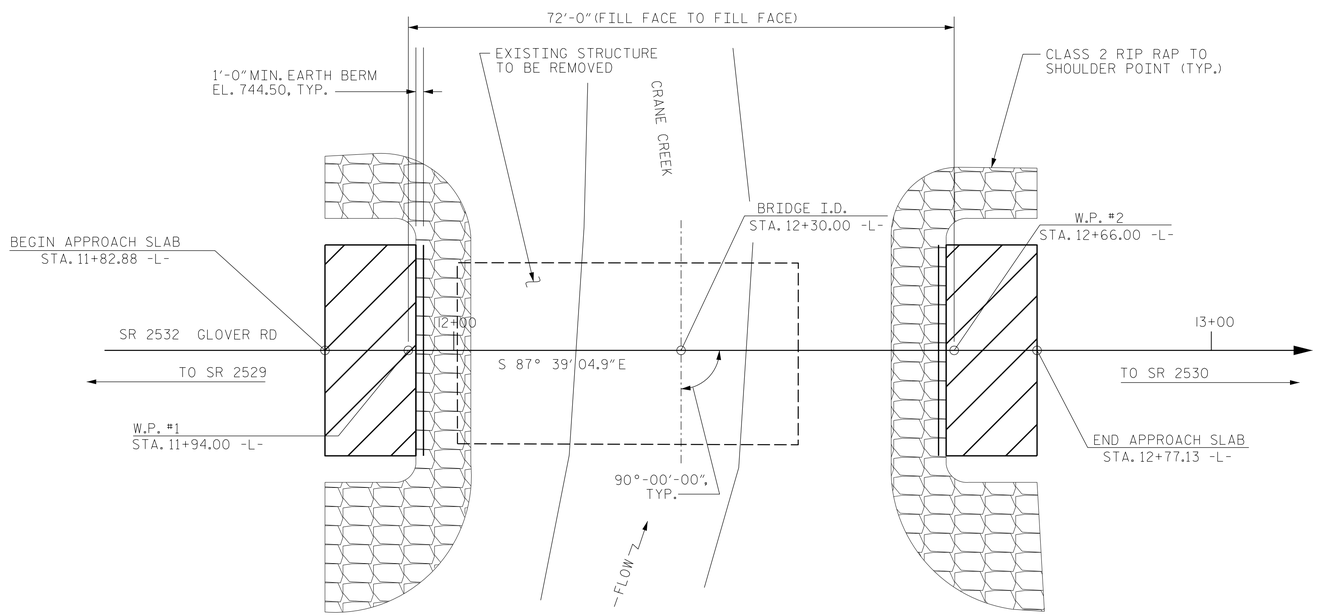

PLAN VIEW

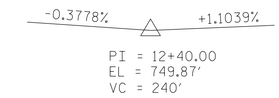

GRADE DATA -L-

HYDRAULIC DATA

DESIGN DISCHARGE	2200 CFS
FREQUENCY OF DESIGN FLOOD	25 YRS.
DESIGN HIGH WATER ELEVATION	750.4'
DRAINAGE AREA	4.88 SQ. MI.
BASE DISCHARGE (Q100)	3500 CFS
BASE HIGH WATER ELEVATION	751.38'

OVERTOPPING FLOOD DATA

OVERTOPPING DISCHARGE	2500 CFS
FREQUENCY OF OVERTOPPING FLOOD	+25 YRS.
OVERTOPPING FLOOD ELEVATION	750.2'

I HEREBY CERTIFY THESE PLANS
ARE AS-BUILT PLANS

PROJECT NO. 17BP.9.R.26
ROWAN COUNTY
STATION: 12+30.00 -L-
SHEET 1 OF 3 REPLACES BRIDGE NO. 306

NORTH CAROLINA PROFESSIONAL SEAL 030046 ENGINEER MATTHEW PAYNE
DocuSigned by: 6/10/2015
3C4001646A0F4D7

STATE OF NORTH CAROLINA
DEPARTMENT OF TRANSPORTATION
RALEIGH

GENERAL DRAWING
FOR BRIDGE ON SR 2532
OVER CRANE CREEK
BETWEEN SR 2529 AND SR 2530

ASSEMBLED BY : C. BLAKES DATE : 2/13
CHECKED BY : M. PAYNE DATE : 2/13
DRAWN BY : CVC 6/10
CHECKED BY : DNS 6/10

ATKINS
1616 E. MILLBROOK ROAD, SUITE #310
RALEIGH, NORTH CAROLINA 27609
(919) 876-6888 NCBEES #F-0326

REVISIONS						SHEET NO.
NO.	BY:	DATE:	NO.	BY:	DATE:	S-1
1			3			TOTAL SHEETS
2			4			13

DocuSign Envelope ID: CA9E4F33-8DDF-412E-A0EA-D23883B709BC

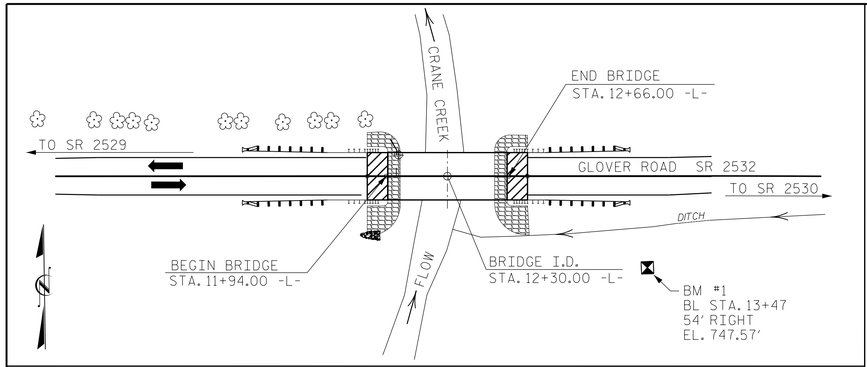

LOCATION SKETCH

FOR UTILITY INFORMATION, SEE UTILITY PLANS AND SPECIAL PROVISIONS

FOUNDATION NOTES

PILES AT END BENT NO. 1 ARE DESIGNED FOR A FACTORED RESISTANCE OF 97 TONS PER PILE.

DRIVE PILES AT END BENT NO. 1 TO A REQUIRED DRIVING RESISTANCE OF 165 TONS PER PILE.

PILES AT END BENT NO. 2 ARE DESIGNED FOR A FACTORED RESISTANCE OF 97 TONS PER PILE.

DRIVE PILES AT END BENT NO. 2 TO A REQUIRED DRIVING RESISTANCE OF 165 TONS PER PILE.

FOR PILES, SEE SECTION 450 OF THE STANDARD SPECIFICATION.

IT HAS BEEN ESTIMATED THAT A HAMMER WITH AN EQUIVALENT RATED ENERGY IN THE RANGE OF 30,000 FT-LBS PER BLOW WILL BE REQUIRED TO DRIVE PILES AT END BENTS NO. 1 AND 2. THIS ESTIMATED ENERGY RANGE DOES NOT RELEASE THE CONTRACTOR FROM PROVIDING DRIVING EQUIPMENT IN ACCORDANCE WITH SUBARTICLE 450-3(D)2 OF THE STANDARD SPECIFICATIONS.

PILE EXCAVATION IS REQUIRED TO INSTALL PILES AT END BENT NO. 1 AND END BENT NO. 2. EXCAVATE HOLES AT PILE LOCATIONS TO ELEVATION 735 FT. FOR PILE EXCAVATION, SEE SECTION 450 OF THE STANDARD SPECIFICATIONS.

CONCRETE OR GROUT IS REQUIRED TO FILL HOLES FOR PILE EXCAVATION AT END BENT NO. 1 AND END BENT NO. 2.

TOTAL BILL OF MATERIAL

	REMOVAL OF EXISTING STRUCTURE @ STA. 11+95.00	UNCLASSIFIED STRUCTURE EXCAVATION	CLASS A CONCRETE	BRIDGE APPROACH SLABS	REINFORCING STEEL	HP 12 X 53 STEEL PILES		PILE EXCAVATION IN SOIL	PILE EXCAVATION NOT IN SOIL	VERTICAL CONCRETE BARRIER RAIL	RIP RAP CLASS II (2'-0" THICK)	GEOTEXTILE FOR DRAINAGE	ELASTOMERIC BEARINGS	3'-0" X 2'-0" X 70' PRESTRESSED CONCRETE CORED SLABS	
	LUMP SUM	LUMP SUM	CU. YDS.	LUMP SUM	LBS.	NO.	LIN.FT.	LIN. FT.	LIN. FT.	LIN.FT.	TON	SQ.YDS.	LUMP SUM	NO.	LIN.FT.
SUPERSTRUCTURE				LUMP SUM						140.25			LUMP SUM	10	700.00
END BENT NO. 1			13.2		1965	5	75	15	35		95	105			
END BENT NO. 2			13.2		1965	5	75	30	20		91	101			
TOTAL	LUMP SUM	LUMP SUM	26.4	LUMP SUM	3930	10	150	45	55	140.25	186	206	LUMP SUM	10	700.00

GENERAL NOTES

ASSUMED LIVE LOAD = HL 93 OR ALTERNATE LOADING.

THIS BRIDGE HAS BEEN DESIGNED IN ACCORDANCE WITH THE REQUIREMENTS OF THE AASHTO LRFD BRIDGE DESIGN SPECIFICATIONS.

FOR OTHER DESIGN DATA AND GENERAL NOTES, SEE SHEET SN.

FOR EROSION CONTROL MEASURES SEE EROSION CONTROL PLANS.

THIS STRUCTURE HAS BEEN DESIGNED IN ACCORDANCE WITH "HEC 18, EVALUATING SCOUR AT BRIDGES".

FOR CRANE SAFETY, SEE SPECIAL PROVISIONS.

FOR SUBMITTAL OF WORKING DRAWINGS, SEE SPECIAL PROVISIONS.

FOR FALSEWORK AND FORMWORK, SEE SPECIAL PROVISIONS.

FOR GROUT FOR STRUCTURES, SEE SPECIAL PROVISIONS.

THE MATERIAL SHOWN IN THE CROSS-HATCHED AREA SHALL BE EXCAVATED FOR A DISTANCE OF 30 FT. EACH SIDE OF CENTERLINE ROADWAY AS DIRECTED BY THE ENGINEER. THIS WORK WILL BE PAID FOR BY THE CONTRACT LUMP SUM PRICE FOR UNCLASSIFIED STRUCTURE EXCAVATION. SEE SECTION 412 OF THE STANDARD SPECIFICATIONS.

THE CONTRACTOR SHALL PROVIDE INDEPENDENT ASSURANCE SAMPLES OF REINFORCING STEEL AS FOLLOWS: FOR PROJECTS REQUIRING UP TO 400 TONS OF REINFORCING STEEL, ONE 30 INCH SAMPLE OF EACH SIZE BAR USED, AND FOR PROJECTS REQUIRING OVER 400 TONS OF REINFORCING STEEL, TWO 30 INCH SAMPLES OF EACH SIZE BAR USED. THE BARS FROM WHICH THE SAMPLES ARE TAKEN MUST THEN BE SPLICED WITH REPLACEMENT BARS OF THE SIZE AND LENGTH OF THE SAMPLE, PLUS A MINIMUM LAP SPLICE OF THIRTY BAR DIAMETERS. PAYMENT FOR THE SAMPLES OF REINFORCING STEEL SHALL BE CONSIDERED INCIDENTAL TO VARIOUS PAY ITEMS.

REMOVAL OF THE EXISTING BRIDGE SHALL BE PERFORMED SO AS NOT TO ALLOW DEBRIS TO FALL INTO THE WATER. THE CONTRACTOR SHALL REMOVE THE BRIDGE AND SUBMIT PLANS FOR DEMOLITION IN ACCORDANCE WITH ARTICLE 402-2 OF THE STANDARD SPECIFICATIONS.

THE SUBSTRUCTURE OF THE EXISTING BRIDGE INDICATED ON THE PLANS IS FROM THE BEST INFORMATION AVAILABLE. SINCE THIS INFORMATION IS SHOWN FOR THE CONVENIENCE OF THE CONTRACTOR, THE CONTRACTOR SHALL HAVE NO CLAIM WHATSOEVER AGAINST THE DEPARTMENT OF TRANSPORTATION FOR ANY DELAYS OR ADDITIONAL COST INCURRED BASED ON DIFFERENCES BETWEEN THE EXISTING BRIDGE SUBSTRUCTURE SHOWN ON THE PLANS AND ACTUAL CONDITIONS AT THE PROJECT SITE.

INASMUCH AS THE PAINT SYSTEM ON THE EXISTING STRUCTURAL STEEL CONTAINS LEAD, THE CONTRACTOR'S ATTENTION IS DIRECTED TO ARTICLE 107-1 OF THE STANDARD SPECIFICATIONS. ANY COSTS RESULTING FROM COMPLIANCE WITH APPLICABLE STATE OR FEDERAL REGULATIONS PERTAINING TO HANDLING OF THE MATERIALS CONTAINING LEAD BASED PAINT SHALL BE INCLUDED IN THE BID PRICE FOR "REMOVAL OF EXISTING STRUCTURE AT STATION 12+02.28 -L-".

THE QUANTITY OF RIP RAP TO BE PAID FOR WILL BE THE ACTUAL NUMBER OF TONS OF EACH CLASS OF RIP RAP WHICH HAS BEEN INCORPORATED INTO THE COMPLETED AND ACCEPTED WORK. THE RIP RAP WILL BE MEASURED BY BEING WEIGHTED IN TRUCKS ON CERTIFIED PLATFORM SCALES OR OTHER CERTIFIED WEIGHING DEVICES. THE QUANTITY OF RIP RAP WILL BE PAID AT CONTRACT UNIT PRICE PER TON.

THE EXISTING STRUCTURE CONSISTING OF A SINGLE SPAN AT 46 FEET STEEL PLANK ON STEEL BEAMS, WITH A CLEAR ROADWAY WIDTH OF 24 FEET ON TIMBER BULKHEADS SHALL BE REMOVED. THE EXISTING BRIDGE IS PRESENTLY POSTED FOR LOAD LIMIT. SHOULD THE STRUCTURAL INTEGRITY OF THE BRIDGE DETERIORATE DURING CONSTRUCTION OF THE PROPOSED BRIDGE, A LOAD LIMIT MAY BE POSTED AND MAY BE REDUCED AS FOUND NECESSARY DURING THE LIFE OF THE PROJECT.

PROJECT NO. 17BP.9.R.26
ROWAN COUNTY
STATION: 12+30.00 -L-

SHEET 2 OF 3

NORTH CAROLINA PROFESSIONAL SEAL 030046 ENGINEER MATTHEW PAYNE

DocuSigned by: 6/10/2015
3C4001646405F4D7...

STATE OF NORTH CAROLINA
DEPARTMENT OF TRANSPORTATION
RALEIGH

GENERAL DRAWING

BRIDGE ON SR 2532
(GLOVER ROAD)
OVER CRANE CREEK

ATKINS 1616 E. MILLBROOK ROAD, SUITE #310 RALEIGH, NORTH CAROLINA 27609 (919) 876-6888 NCBEES #F-0326

ASSEMBLED BY : C. BLAKES	DATE : 2/13
CHECKED BY : M. PAYNE	DATE : 2/13
DRAWN BY : CVC 6/10	
CHECKED BY : DNS 6/10	

REVISIONS						SHEET NO.
NO.	BY:	DATE:	NO.	BY:	DATE:	S-2
1			3			TOTAL SHEETS
2			4			13

DocuSign Envelope ID: CA9E4F33-8DDF-412E-A0EA-D23883B709BC

LOAD AND RESISTANCE FACTOR RATING (LRFD) SUMMARY FOR PRESTRESSED CONCRETE GIRDERS

LEVEL		VEHICLE	WEIGHT (W) (TONS)	CONTROLLING LOAD RATING	MINIMUM RATING FACTORS (RF)	TONS = W X RF	STRENGTH I LIMIT STATE											SERVICE III LIMIT STATE						COMMENT NUMBER
							LIVELOAD FACTORS	MOMENT					SHEAR					LIVELOAD FACTORS	MOMENT					
								DISTRIBUTION FACTORS (DF)	RATING FACTOR	SPAN	GIRDER LOCATION	DISTANCE FROM LEFT END OF SPAN (ft)	DISTRIBUTION FACTORS (DF)	RATING FACTOR	SPAN	GIRDER LOCATION	DISTANCE FROM LEFT END OF SPAN (ft)		DISTRIBUTION FACTORS (DF)	RATING FACTOR	SPAN	GIRDER LOCATION	DISTANCE FROM LEFT END OF SPAN (ft)	
DESIGN LOAD RATING		HL-93(Inv)	N/A	1	1.006	--	1.75	0.273	1.03	70'	EL	34.5	0.507	1.32	70'	EL	6.9	0.80	0.273	1.01	70'	EL	34.5	
		HL-93(Opr)	N/A	--	1.341	--	1.35	0.273	1.34	70'	EL	34.5	0.507	1.72	70'	EL	6.9	N/A	--	--	--	--	--	
		HS-20(Inv)	36.000	2	1.306	47.02	1.75	0.273	1.34	70'	EL	34.5	0.507	1.65	70'	EL	6.9	0.80	0.273	1.31	70'	EL	34.5	
		HS-20(Opr)	36.000	--	1.74	62.64	1.35	0.273	1.74	70'	EL	34.5	0.507	2.14	70'	EL	6.9	N/A	--	--	--	--	--	
LEGAL LOAD RATING	SV	SNSH	13.500	--	2.917	39.379	1.4	0.273	3.75	70'	EL	34.5	0.507	4.87	70'	EL	6.9	0.80	0.273	2.92	70'	EL	34.5	
		SNGARBS2	20.000	--	2.187	43.741	1.4	0.273	2.81	70'	EL	34.5	0.507	3.47	70'	EL	6.9	0.80	0.273	2.19	70'	EL	34.5	
		SNAGRIS2	22.000	--	2.077	45.69	1.4	0.273	2.67	70'	EL	34.5	0.507	3.23	70'	EL	6.9	0.80	0.273	2.08	70'	EL	34.5	
		SNCOTTS3	27.250	--	1.452	39.565	1.4	0.273	1.87	70'	EL	34.5	0.507	2.43	70'	EL	6.9	0.80	0.273	1.45	70'	EL	34.5	
		SNAGGRS4	34.925	--	1.218	42.554	1.4	0.273	1.57	70'	EL	34.5	0.507	2.03	70'	EL	6.9	0.80	0.273	1.22	70'	EL	34.5	
		SNS5A	35.550	--	1.191	42.346	1.4	0.273	1.53	70'	EL	34.5	0.507	2.06	70'	EL	6.9	0.80	0.273	1.19	70'	EL	34.5	
		SNS6A	39.950	--	1.095	43.747	1.4	0.273	1.41	70'	EL	34.5	0.507	1.88	70'	EL	6.9	0.80	0.273	1.10	70'	EL	34.5	
		SNS7B	42.000	--	1.043	43.801	1.4	0.273	1.34	70'	EL	34.5	0.507	1.85	70'	EL	6.9	0.80	0.273	1.04	70'	EL	34.5	
	TTST	TNAGRIT3	33.000	--	1.336	44.087	1.4	0.273	1.72	70'	EL	34.5	0.507	2.23	70'	EL	6.9	0.80	0.273	1.34	70'	EL	34.5	
		TNT4A	33.075	--	1.342	44.401	1.4	0.273	1.72	70'	EL	34.5	0.507	2.17	70'	EL	6.9	0.80	0.273	1.34	70'	EL	34.5	
		TNT6A	41.600	--	1.1	45.746	1.4	0.273	1.41	70'	EL	34.5	0.507	1.98	70'	EL	6.9	0.80	0.273	1.10	70'	EL	34.5	
		TNT7A	42.000	--	1.106	46.462	1.4	0.273	1.42	70'	EL	34.5	0.507	1.94	70'	EL	6.9	0.80	0.273	1.11	70'	EL	34.5	
		TNT7B	42.000	--	1.147	48.18	1.4	0.273	1.47	70'	EL	34.5	0.507	1.8	70'	EL	6.9	0.80	0.273	1.15	70'	EL	34.5	
		TNAGRIT4	43.000	--	1.089	46.838	1.4	0.273	1.4	70'	EL	34.5	0.507	1.74	70'	EL	6.9	0.80	0.273	1.09	70'	EL	34.5	
		TNAGT5A	45.000	--	1.026	46.175	1.4	0.273	1.32	70'	EL	34.5	0.507	1.74	70'	EL	6.9	0.80	0.273	1.03	70'	EL	34.5	
		TNAGT5B	45.000	3	1.013	45.579	1.4	0.273	1.3	70'	EL	34.5	0.507	1.66	70'	EL	6.9	0.80	0.273	1.01	70'	EL	34.5	

LOAD FACTORS:

DESIGN LOAD RATING FACTORS	LIMIT STATE	γ_{DC}	γ_{DW}
	STRENGTH I	1.25	1.50
	SERVICE III	1.00	1.00

NOTES:

MINIMUM RATING FACTORS ARE BASED ON THE STRENGTH I AND SERVICE III LIMIT STATES.

ALLOWABLE STRESSES FOR SERVICE III LIMIT STATE ARE AS REQUIRED FOR DESIGN.

COMMENTS:

1.
2.
3.
4.

(#) CONTROLLING LOAD RATING

(1) DESIGN LOAD RATING (HL-93)

(2) DESIGN LOAD RATING (HS-20)

(3) LEGAL LOAD RATING **

** SEE CHART FOR VEHICLE TYPE

GIRDER LOCATION

I - INTERIOR GIRDER
EL - EXTERIOR LEFT GIRDER
ER - EXTERIOR RIGHT GIRDER

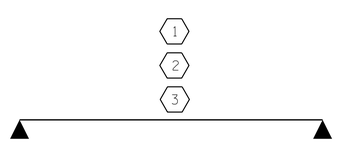

LRFR SUMMARY

FOR SPAN 'A'

PROJECT NO. 17BP.9.R.26

ROWAN COUNTY

STATION: 12+30.00 -L-

NORTH CAROLINA PROFESSIONAL SEAL 030046 ENGINEER MATTHEW PAYNE

DocuSigned by: 6/10/2015

STATE OF NORTH CAROLINA
DEPARTMENT OF TRANSPORTATION
RALEIGH

STANDARD
LRFR SUMMARY FOR
70' CORED SLAB UNIT
90° SKEW
(NON-INTERSTATE TRAFFIC)

ASSEMBLED BY : C. BLAKES DATE : 2/13
CHECKED BY : M. PAYNE DATE : 2/13

DRAWN BY : CVC 6/10
CHECKED BY : DNS 6/10

ATKINS
1616 E. MILLBROOK ROAD, SUITE #310
RALEIGH, NORTH CAROLINA 27609
(919) 876-6888 NCBEES #F-0326

REVISIONS						SHEET NO.
NO.	BY:	DATE:	NO.	BY:	DATE:	S-3
1			3			TOTAL SHEETS
2			4			13

STD. NO. 24LRFR1_90S_70L

DocuSign Envelope ID: CA9E4F33-8DDF-412E-A0EA-D23883B709BC

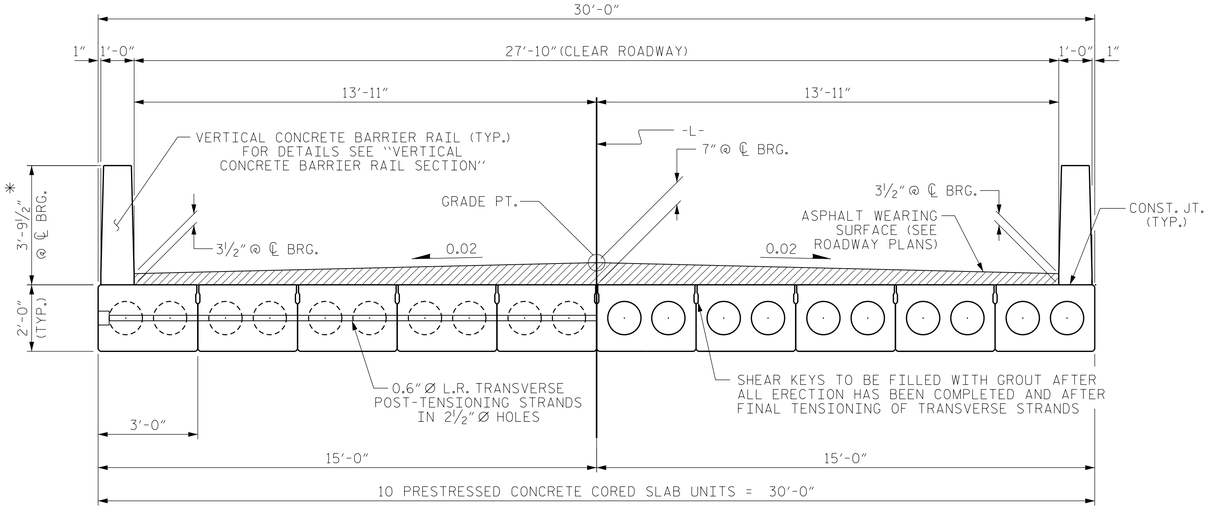

HALF SECTION
AT INTERMEDIATE DIAPHRAGMS

TYPICAL SECTION

HALF SECTION
THROUGH VOIDS

* - THE MAXIMUM BARRIER RAIL HEIGHT AND ASPHALT THICKNESS IS SHOWN. THE HEIGHT OF THE BARRIER RAIL AND ASPHALT THICKNESS VARIES WHILE THE TOP OF THE BARRIER RAIL FOLLOWS THE PROFILE OF THE GUTTERLINE. FOR RAIL HEIGHT DETAILS AND ASPHALT THICKNESS, SEE THE "VERTICAL CONCRETE BARRIER RAIL SECTION" DETAIL.

FIXED END

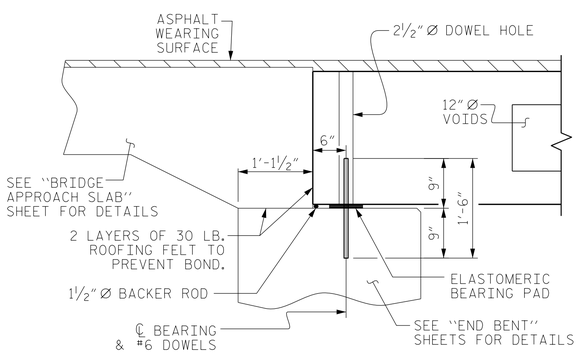

SECTION AT END BENT

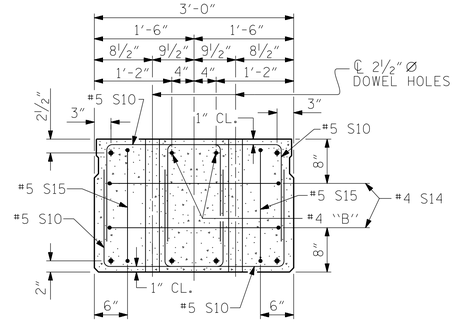

END ELEVATION

SHOWING PLACEMENT OF DOUBLE STIRRUPS AND LOCATION OF DOWEL HOLES. (STRAND LAYOUT NOT SHOWN.) INTERIOR SLAB UNIT SHOWN-EXTERIOR SLAB UNIT SIMILAR EXCEPT SHEAR KEY LOCATION.

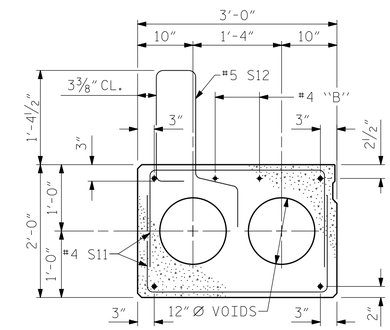

EXTERIOR SLAB SECTION

(FOR PRESTRESSED STRAND LAYOUT, SEE INTERIOR SLAB SECTION.)

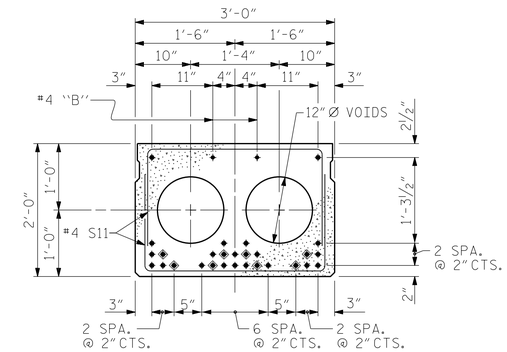

INTERIOR SLAB SECTION (70' UNIT)

(28 STRANDS REQUIRED)

0.6" Ø LOW RELAXATION STRAND LAYOUT

◈ BOND SHALL BE BROKEN ON THESE STRANDS FOR A DISTANCE OF 12'-0" FROM END OF CORED SLAB UNIT. SEE STANDARD SPECIFICATIONS, ARTICLE 1078-7.

◉ OPTIONAL FULL LENGTH DEBONDED STRANDS. THESE STRANDS ARE NOT REQUIRED. IF THE FABRICATOR CHOOSES TO INCLUDE THESE STRANDS IN THE CORED SLAB UNIT, THE STRANDS SHALL BE DEBONDED FOR THE FULL LENGTH OF THE UNIT AT NO ADDITIONAL COST. SEE STANDARD SPECIFICATIONS, ARTICLE 1078-7.

DEBONDING LEGEND

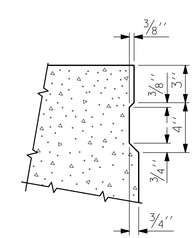

SHEAR KEY DETAIL

NOTE: OMIT SHEAR KEY ON OUTSIDE FACE OF EXTERIOR CORED SLABS.

PROJECT NO. 17BP.9.R.26
ROWAN COUNTY
STATION: 12+30.00 -L-

SHEET 1 OF 3

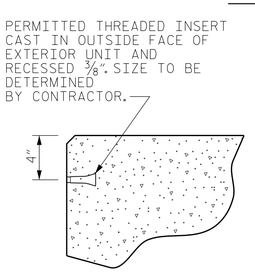

THREADED INSERT DETAIL

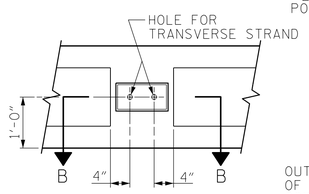

ELEVATION VIEW

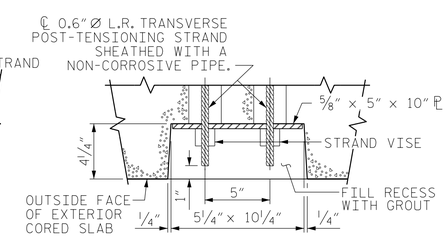

SECTION B-B

GROUTED RECESS AT END OF POST-TENSIONED STRAND CORED SLABS

ASSEMBLED BY : C. BLAKES	DATE : 2/13		
CHECKED BY : M. PAYNE	DATE : 5/15		
DRAWN BY : MAA 6/10	REV. 8/14	MAA/TMG	
CHECKED BY : MKT 7/10			

NORTH CAROLINA PROFESSIONAL SEAL 030046 ENGINEER MATTHEW PAYNE

DocuSigned by: Matthew Payne 3C4001648A0F4D7... 6/10/2015

ATKINS
1616 E. MILLBROOK ROAD, SUITE #310
RALEIGH, NORTH CAROLINA 27609
(919) 876-6888 NCBEES #F-0326

STATE OF NORTH CAROLINA
DEPARTMENT OF TRANSPORTATION
RALEIGH

STANDARD

3'-0" X 2'-0" PRESTRESSED CONCRETE CORED SLAB UNIT

REVISIONS						SHEET NO.
NO.	BY:	DATE:	NO.	BY:	DATE:	S-4
1			3			TOTAL SHEETS
2			4			13

STD. NO. 24PCS4_30_90S

DocuSign Envelope ID: CA9E4F33-8DDF-412E-A0EA-D23883B709BC

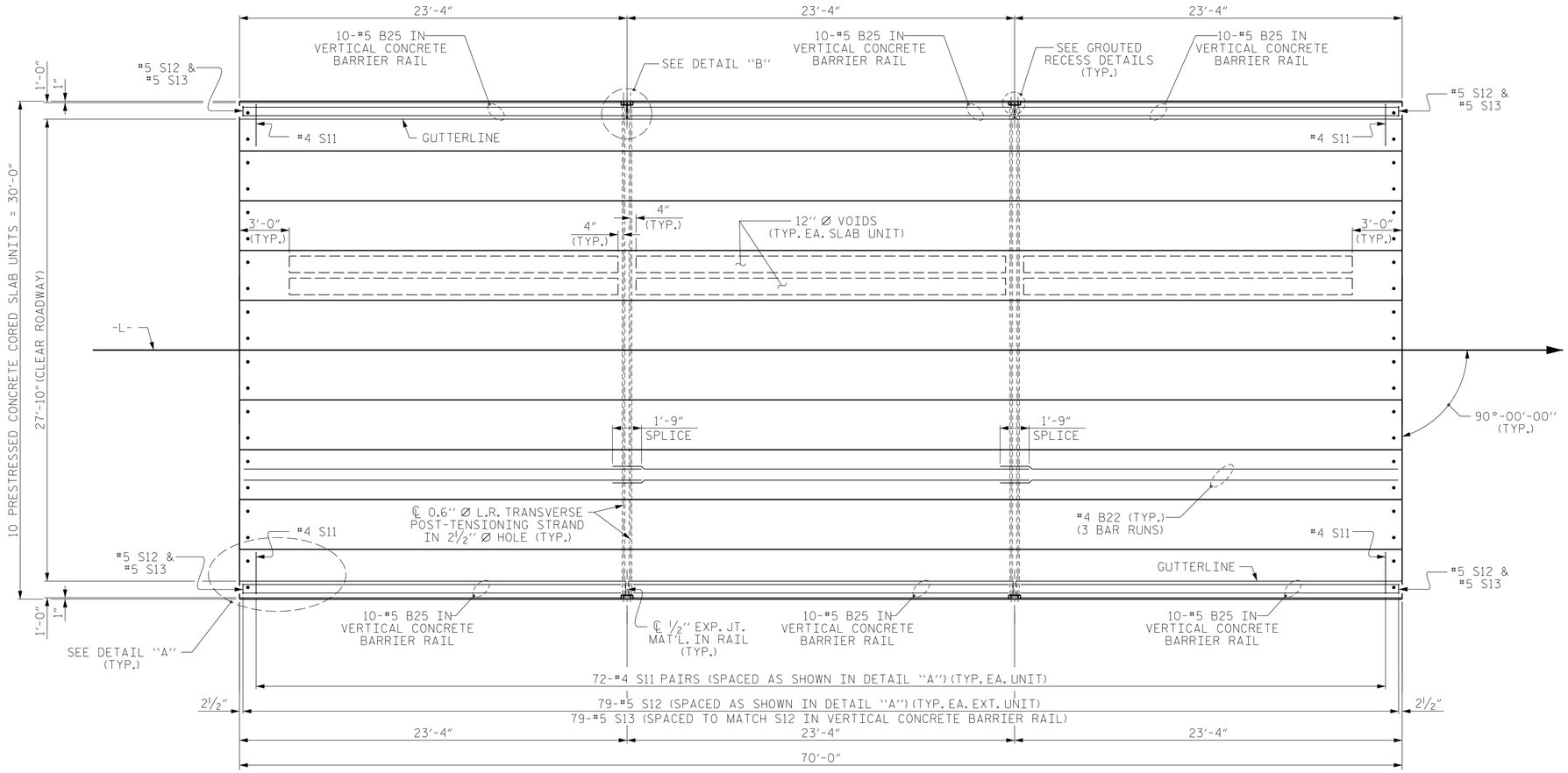

PLAN OF UNIT

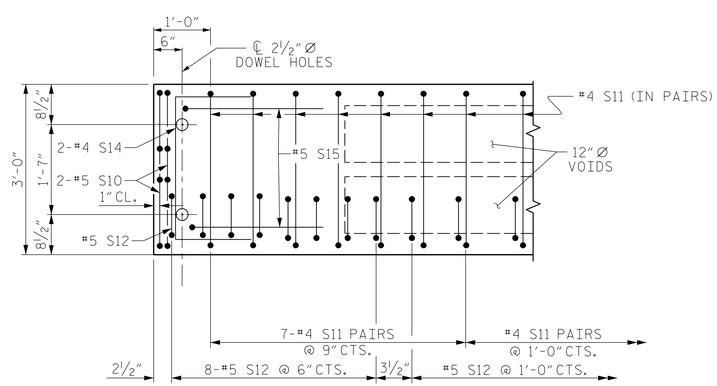

DETAIL "A"

(TYPICAL EACH END OF UNIT)
NOTE: EXTERIOR UNIT SHOWN - INTERIOR UNIT SIMILAR EXCEPT OMIT #5 S12 BARS.

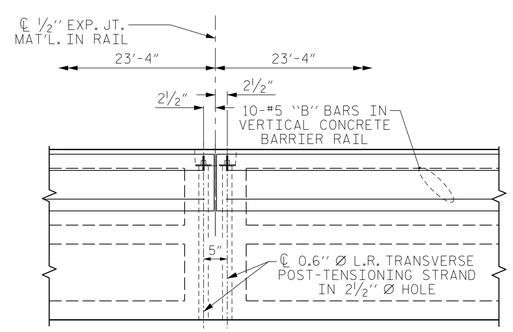

DETAIL "B"

#4 S11 BARS MAY BE SHIFTED AS NECESSARY TO MAINTAIN 1" CLEAR TO GROUTED RECESS AND 2½" Ø TRANSVERSE POST-TENSIONING STRAND HOLES

PROJECT NO. 17BP.9.R.26
ROWAN COUNTY
STATION: 12+30.00 -L-

SHEET 2 OF 3

STATE OF NORTH CAROLINA
DEPARTMENT OF TRANSPORTATION
RALEIGH

PLAN OF 70' UNIT 27'-10" CLEAR ROADWAY 90° SKEW

NORTH CAROLINA PROFESSIONAL SEAL 030046 ENGINEER MATTHEW PAYNE
DocuSigned by: 3C4001646405F4D7...
6/10/2015

ASSEMBLED BY : C. BLAKES	DATE : 2/13		
CHECKED BY : M. PAYNE	DATE : 5/15		
DRAWN BY : MAA 6/10	REV. 12/5/11 MAA/AAC		
CHECKED BY : MKT 7/10	REV. 8/14 MAA/TMG		

ATKINS
1616 E. MILLBROOK ROAD, SUITE #310
RALEIGH, NORTH CAROLINA 27609
(919) 876-6888 NCBEES #F-0326

REVISIONS						SHEET NO.
NO.	BY:	DATE:	NO.	BY:	DATE:	S-5
1			3			TOTAL SHEETS
2			4			13

STD. NO. 24PCS_30_90S_70L

DocuSign Envelope ID: CA9E4F33-8DDF-412E-A0EA-D23883B709BC

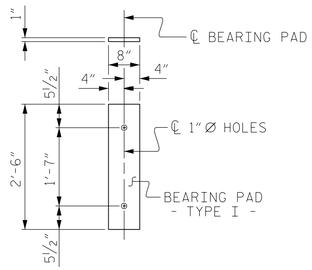

FIXED END
(TYPE I - 20 REQ'D)

ELASTOMERIC BEARING DETAILS

ELASTOMER IN ALL BEARINGS SHALL BE 60 DUROMETER HARDNESS.

DEAD LOAD DEFLECTION AND CAMBER	
	3'-0" x 2'-0"
70' CORED SLAB UNIT	0.6" Ø L.R. STRAND
CAMBER (SLAB ALONE IN PLACE)	2¼" ↑
DEFLECTION DUE TO SUPERIMPOSED DEAD LOAD**	¾" ↓
FINAL CAMBER	1½" ↑

** INCLUDES FUTURE WEARING SURFACE

CORED SLABS REQUIRED			
	NUMBER	LENGTH	TOTAL LENGTH
70' UNIT			
EXTERIOR C.S.	2	70'-0"	140'-0"
INTERIOR C.S.	8	70'-0"	560'-0"
TOTAL	10		700'-0"

BILL OF MATERIAL FOR VERTICAL CONCRETE BARRIER RAIL						
BAR	BARS PER PAIR OF EXTERIOR UNITS	TOTAL NO.	SIZE	TYPE	LENGTH	WEIGHT
	70' UNIT					
*B25	60	60	#5	STR	22'-11"	1434
*S13	158	158	#5	2	7'-2"	1181
* EPOXY COATED REINFORCING STEEL				LBS.		2615
CLASS AA CONCRETE				CU.YDS.		18.1
TOTAL VERTICAL CONCRETE BARRIER RAIL				LN. FT.		140.25

GUTTERLINE ASPHALT THICKNESS & RAIL HEIGHT		
	ASPHALT OVERLAY THICKNESS @ MID-SPAN	RAIL HEIGHT @ MID-SPAN
70' UNITS	2"	3'-8"

BAR TYPES

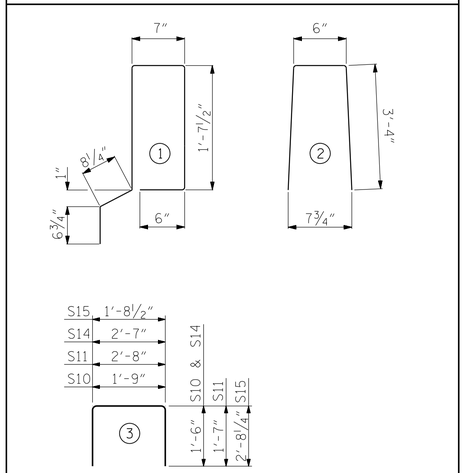

ALL BAR DIMENSIONS ARE OUT TO OUT

GRADE 270 STRANDS	
	0.6" Ø L.R.
AREA (SQUARE INCHES)	0.217
ULTIMATE STRENGTH (LBS. PER STRAND)	58,600
APPLIED PRESTRESS (LBS. PER STRAND)	43,950

BILL OF MATERIAL FOR ONE 70' CORED SLAB UNIT							
				EXTERIOR UNIT		INTERIOR UNIT	
BAR	NUMBER	SIZE	TYPE	LENGTH	WEIGHT	LENGTH	WEIGHT
B22	6	#4	STR	24'-6"	98	24'-6"	98
S10	8	#5	3	4'-9"	40	4'-9"	40
S11	144	#4	3	5'-10"	561	5'-10"	561
*S12	79	#5	1	5'-7"	460		
S14	4	#4	3	5'-7"	15	5'-7"	15
S15	4	#5	3	7'-1"	30	7'-1"	30
REINFORCING STEEL			LBS.		744		744
* EPOXY COATED REINFORCING STEEL			LBS.		460		
7000 P.S.I. CONCRETE			CU. YDS.		11.8		11.8
0.6" Ø L.R. STRANDS			No.		28		28

NOTES

ALL PRESTRESSING STRANDS SHALL BE 7-WIRE LOW RELAXATION GRADE 270 STRANDS AND SHALL CONFORM TO AASHTO M203 EXCEPT FOR SAMPLING REQUIREMENTS WHICH SHALL BE IN ACCORDANCE WITH THE STANDARD SPECIFICATIONS.

ALL REINFORCING STEEL CAST WITH THE CORED SLAB SECTIONS SHALL BE GRADE 60 AND SHALL BE INCLUDED IN THE UNIT PRICE BID FOR PRESTRESSED CONCRETE CORED SLABS.

RECESSES FOR TRANSVERSE STRANDS SHALL BE GROUTED AFTER THE TENSIONING OF THE STRANDS.

THE 2½" Ø DOWEL HOLES AT FIXED ENDS OF SLAB SECTIONS SHALL BE FILLED WITH NON-SHRINK GROUT.

THE BACKER RODS SHALL CONFORM TO THE REQUIREMENTS OF TYPE M BOND BREAKER. SEE SECTION 1028 OF THE STANDARD SPECIFICATIONS.

WHEN CORED SLABS ARE CAST, AN INTERNAL HOLD-DOWN SYSTEM SHALL BE EMPLOYED TO PREVENT VOIDS FROM RISING OR MOVING SIDEWAYS. AT LEAST SIX WEEKS PRIOR TO CASTING CORED SLABS, THE CONTRACTOR SHALL SUBMIT TO THE ENGINEER FOR REVIEW AND COMMENT, DETAILED DRAWINGS OF THE PROPOSED HOLD-DOWN SYSTEM. IN ADDITION TO STRUCTURAL DETAILS, LOCATION AND SPACING OF THE HOLD-DOWNS SHALL BE INDICATED.

THE TRANSFER OF LOAD FROM THE ANCHORAGES TO THE CORED SLAB UNIT SHALL BE DONE WHEN THE CONCRETE HAS REACHED A COMPRESSIVE STRENGTH OF NOT LESS THAN THE REQUIRED STRENGTH SHOWN IN THE "CONCRETE RELEASE STRENGTH" TABLE.

ALL REINFORCING STEEL IN VERTICAL CONCRETE BARRIER RAILS SHALL BE EPOXY COATED.

PRESTRESSING STRANDS SHALL BE CUT FLUSH WITH THE CORED SLAB UNIT ENDS.

APPLY EPOXY PROTECTIVE COATING TO CORED SLAB UNIT ENDS.

GROOVED CONTRACTION JOINTS, ½" IN DEPTH, SHALL BE TOOLED IN ALL EXPOSED FACES OF THE BARRIER RAIL AND IN ACCORDANCE WITH ARTICLE 825-10(B) OF THE STANDARD SPECIFICATIONS. A CONTRACTION JOINT SHALL BE LOCATED AT EACH THIRD POINT BETWEEN BARRIER RAIL EXPANSION JOINTS. ONLY ONE CONTRACTION JOINT IS REQUIRED AT MIDPOINT OF BARRIER RAIL SEGMENTS LESS THAN 20 FEET IN LENGTH AND NO CONTRACTION JOINTS ARE REQUIRED FOR THOSE SEGMENTS LESS THAN 10 FEET IN LENGTH.

FLAME CUTTING OF THE TRANSVERSE POST-TENSIONING STRAND IS NOT ALLOWED.

MAINTAIN A SYMMETRIC TENSION FORCE BETWEEN EACH PAIR OF TRANSVERSE POST TENSIONING STRANDS IN THE DIAPHRAGM.

THE #4 S11 STIRRUPS MAY BE SHIFTED AS NECESSARY TO MAINTAIN 1" CLEAR TO THE GROUTED RECESS.

FOR GROUT FOR STRUCTURES, SEE SPECIAL PROVISIONS.

THE PERMITTED THREADED INSERTS ARE DETAILED AS AN OPTION FOR THE CONTRACTOR TO ATTACH FALSEWORK AND FORMWORK DURING CONSTRUCTION.

THE PERMITTED THREADED INSERTS IN THE EXTERIOR UNITS SHALL BE SIZED BY THE CONTRACTOR, SPACED AT 4'-0" CENTERS AND GALVANIZED IN ACCORDANCE WITH SECTION 1076 OF THE STANDARD SPECIFICATIONS. STAINLESS STEEL THREADED INSERTS MAY BE USED AS AN ALTERNATE.

THE PERMITTED THREADED INSERTS SHALL BE GROUTED BY THE CONTRACTOR IMMEDIATELY FOLLOWING REMOVAL OF THE FALSEWORK.

THE COST OF THE PERMITTED THREADED INSERTS SHALL BE INCLUDED IN THE PRICE BID FOR THE PRECAST UNITS.

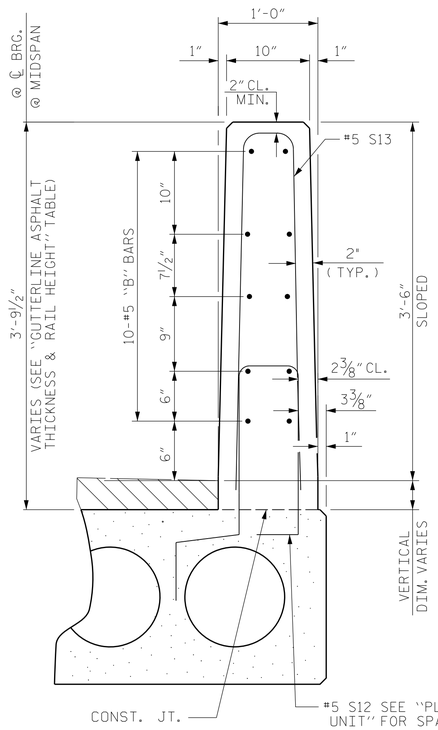

SECTION THRU RAIL

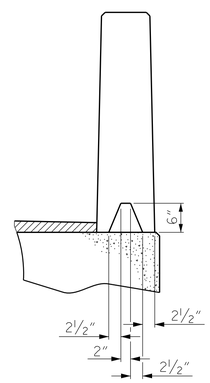

SECTION S-S
AT DAM IN OPEN JOINT
(THIS IS TO BE USED ONLY WHEN SLIP FORM IS USED)

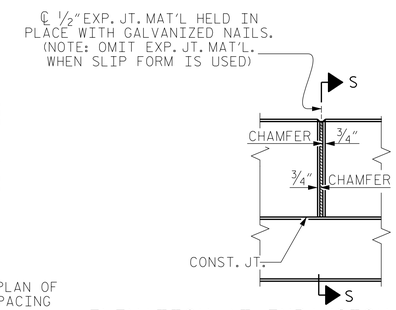

ELEVATION AT EXPANSION JOINTS

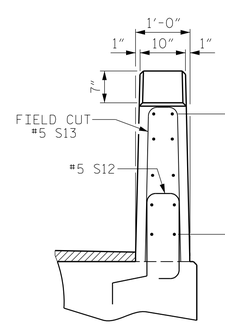

END VIEW

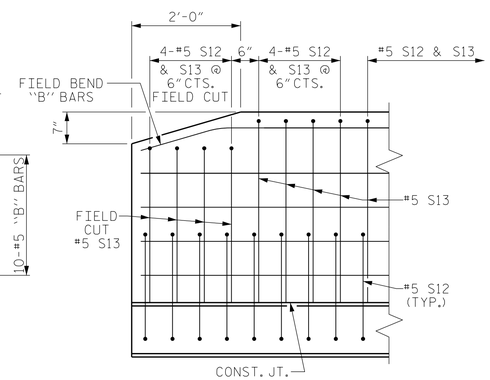

SIDE VIEW

END OF RAIL DETAILS

CONCRETE RELEASE STRENGTH	
UNIT	PSI
70' UNITS	5500

PROJECT NO. 17BP.9.R.26
ROWAN COUNTY
STATION: 12+30.00 -L-

SHEET 3 OF 3

STATE OF NORTH CAROLINA
DEPARTMENT OF TRANSPORTATION
RALEIGH

STANDARD
3'-0" X 2'-0"
PRESTRESSED CONCRETE
CORED SLAB UNIT

NORTH CAROLINA PROFESSIONAL SEAL 030046 ENGINEER MATTHEW PAYNE
DocuSigned by: 3C4001646F4D7...
6/10/2015

VERTICAL CONCRETE BARRIER RAIL DETAILS

ASSEMBLED BY :	C. BLAKES	DATE :	2/13
CHECKED BY :	M. PAYNE	DATE :	5/15
DRAWN BY : MAA	6/10	REV. 11/14	MAA/TMG
CHECKED BY : MKT	7/10		

ATKINS
1616 E. MILLBROOK ROAD, SUITE #310
RALEIGH, NORTH CAROLINA 27609
(919) 876-6888 NCBEES #F-0326

REVISIONS						SHEET NO.
NO.	BY:	DATE:	NO.	BY:	DATE:	S-6
1			3			TOTAL SHEETS
2			4			13

STD. NO. 24PCS3_30_90S

DocuSign Envelope ID: CA9E4F33-8DDF-412E-A0EA-D23883B709BC

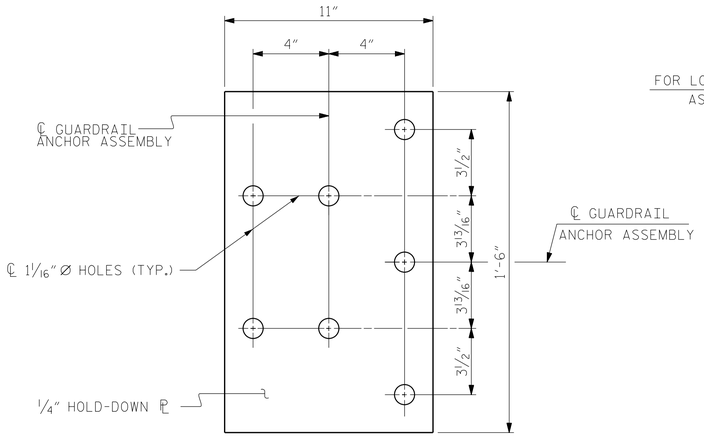

PLAN

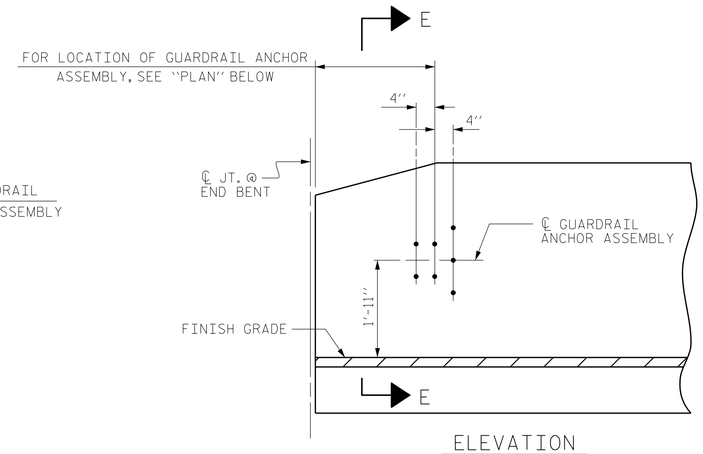

ELEVATION

NOTES

THE GUARDRAIL ANCHOR ASSEMBLY SHALL CONSIST OF A 1/4" HOLD DOWN PLATE AND 7 - 7/8" Ø BOLTS WITH NUTS AND WASHERS.

THE HOLD-DOWN PLATE SHALL CONFORM TO AASHTO M270 GRADE 36. AFTER FABRICATION, THE HOLD-DOWN PLATE SHALL BE HOT-DIP GALVANIZED IN ACCORDANCE WITH AASHTO M111.

BOLTS SHALL CONFORM TO THE REQUIREMENTS OF ASTM A307 AND NUTS SHALL CONFORM TO THE REQUIREMENTS OF AASHTO M291. BOLTS, NUTS AND WASHERS SHALL BE GALVANIZED. (AT THE CONTRACTOR'S OPTION, STAINLESS STEEL BOLTS, NUTS AND WASHERS MAY BE USED AS AN ALTERNATE FOR THE 7/8" Ø GALVANIZED BOLTS, NUTS AND WASHERS. THEY SHALL CONFORM TO OR EXCEED THE MECHANICAL REQUIREMENTS OF ASTM A307. THE USE OF THIS ALTERNATE SHALL BE APPROVED BY THE ENGINEER.)

THE GUARDRAIL ANCHOR ASSEMBLY IS REQUIRED AT ALL POINTS WHERE APPROACH GUARDRAIL IS TO BE ATTACHED TO THE END OF BARRIER RAIL. FOR POINTS OF ATTACHMENT, SEE SKETCH.

AFTER INSTALLATION, THE EXPOSED THREAD OF THE BOLT SHALL BE BURRED WITH A SHARP POINTED TOOL.

THE COST OF THE GUARDRAIL ANCHOR ASSEMBLY SHALL BE INCLUDED IN THE UNIT CONTRACT PRICE BID FOR VERTICAL CONCRETE BARRIER RAIL.

THE VERTICAL REINFORCING BARS MAY BE SHIFTED SLIGHTLY IN THE VERTICAL CONCRETE BARRIER RAIL TO CLEAR ASSEMBLY BOLTS.

THE 1 1/4" Ø HOLES SHALL BE FORMED OR DRILLED WITH A CORE BIT. IMPACT TOOLS WILL NOT BE PERMITTED. ANY CONCRETE DAMAGED BY THIS WORK SHALL BE REPAIRED TO THE SATISFACTION OF THE ENGINEER.

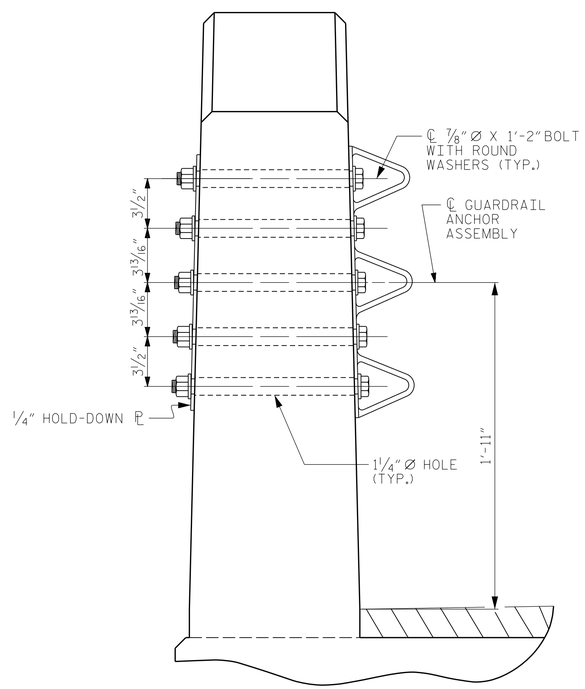

SECTION E-E

GUARDRAIL ANCHOR ASSEMBLY DETAILS

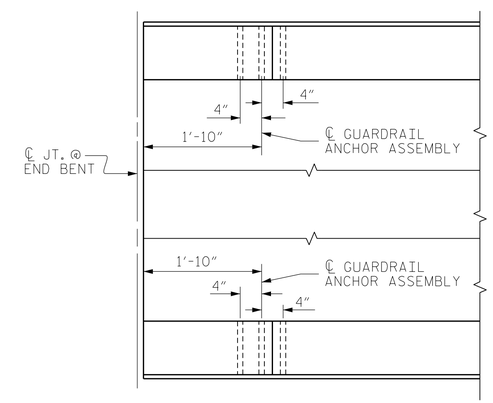

PLAN

LOCATION OF ANCHORS FOR GUARDRAIL

END BENT #1 SHOWN, END BENT #2 SIMILAR.

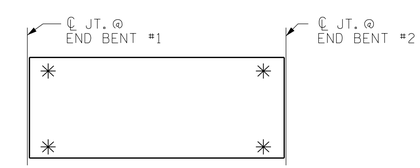

SKETCH SHOWING POINTS OF ATTACHMENT

✳ DENOTES GUARDRAIL ANCHOR ASSEMBLY

PROJECT NO. 17BP.9.R.26

ROWAN COUNTY

STATION: 12+30.00 -L-

NORTH CAROLINA PROFESSIONAL SEAL 030046 ENGINEER MATTHEW PAYNE

DocuSigned by: 5C0D21464A0F4D7... 6/10/2015

STATE OF NORTH CAROLINA
DEPARTMENT OF TRANSPORTATION
RALEIGH

STANDARD
GUARDRAIL ANCHORAGE DETAILS FOR VERTICAL CONCRETE BARRIER RAIL

REVISIONS						SHEET NO.
NO.	BY:	DATE:	NO.	BY:	DATE:	S-7
1			3			TOTAL SHEETS
2			4			13

ATKINS 1616 E. MILLBROOK ROAD, SUITE #310 RALEIGH, NORTH CAROLINA 27609 (919) 876-6888 NCBEES #F-0326

ASSEMBLED BY : C. BLAKES		DATE : 2/13	
CHECKED BY : M. PAYNE		DATE : 5/15	
DRAWN BY : MAA	5/10	REV. 12/5/11	MAA/GM
CHECKED BY : GM	5/10	REV. 6/13	MAA/GM
		REV. 1/15	MAA/TMG

(SHT 1) STD. NO. GRA3

DocuSign Envelope ID: CA9E4F33-8DDF-412E-A0EA-D23883B709BC

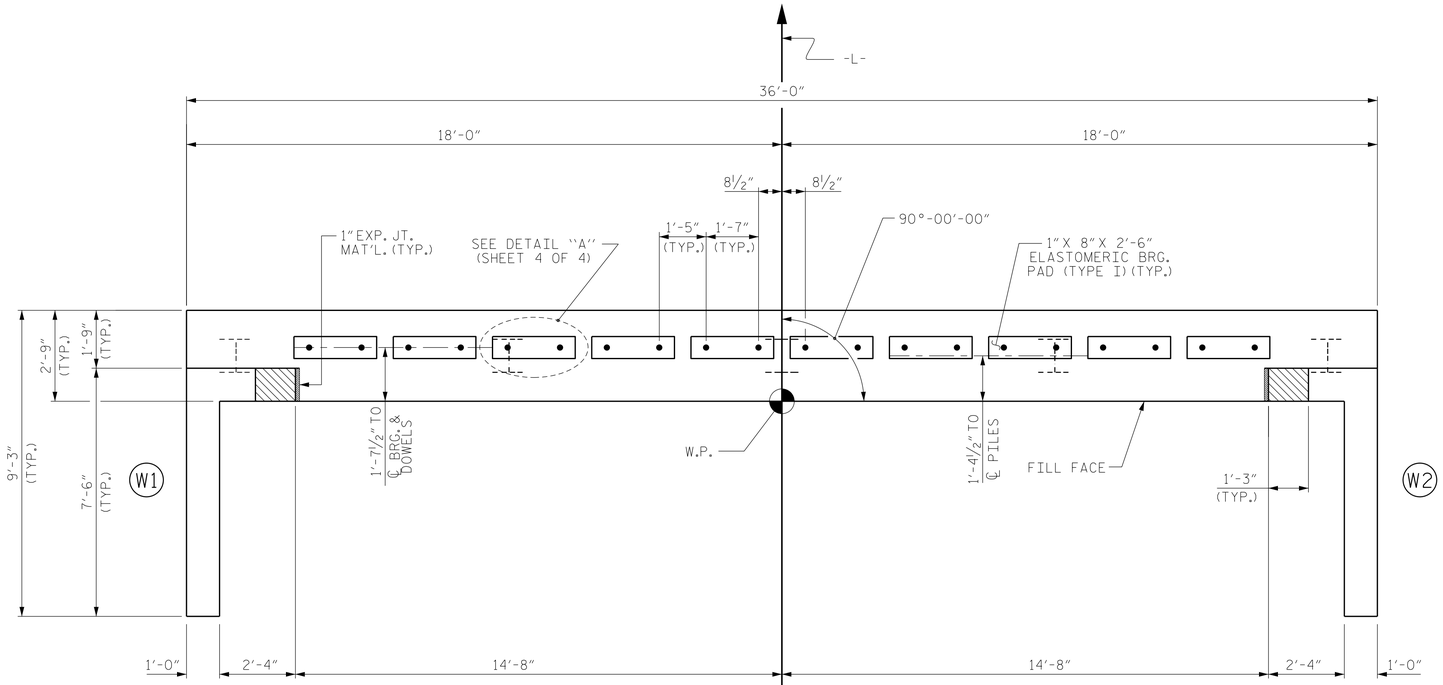

PLAN

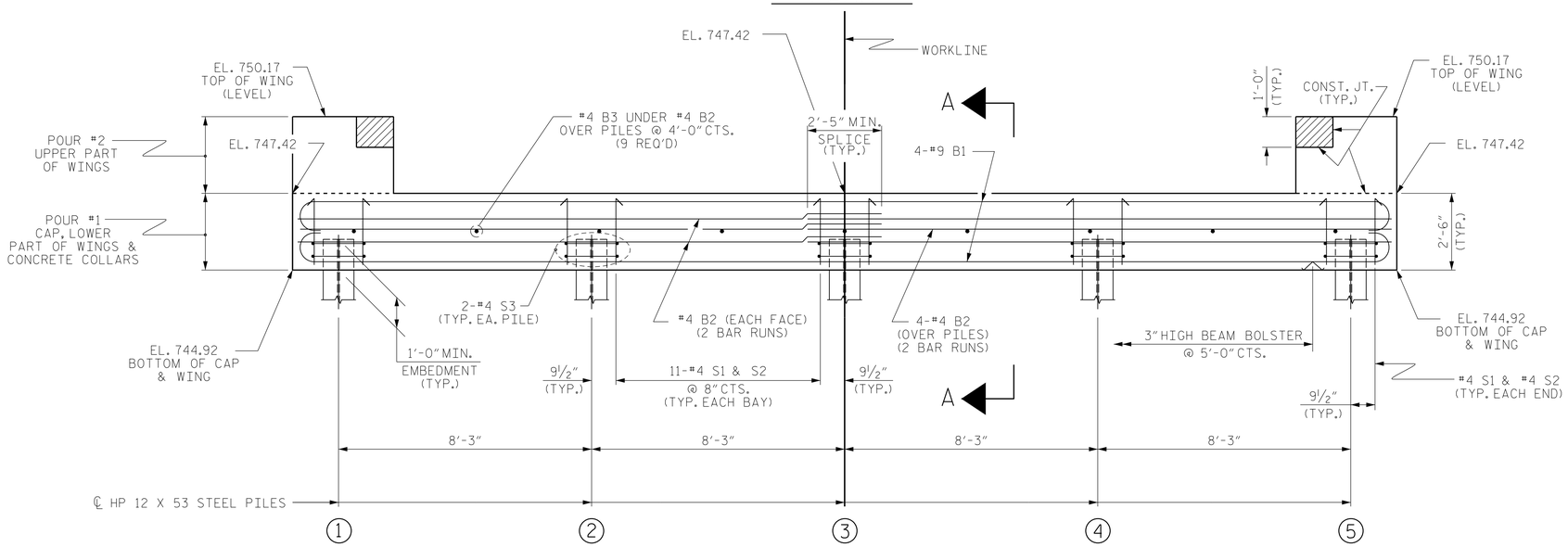

ELEVATION

WINGS NOT SHOWN FOR CLARITY.
FOR SECTION A-A, SEE SHEET 4 OF 4.
CONCRETE COLLARS FOR STEEL PILES NOT SHOWN IN PLAN AND ELEVATION VIEWS FOR CLARITY.
SEE "CORROSION PROTECTION FOR STEEL PILES DETAIL", SHEET 4 OF 4.

NOTES

STIRRUPS IN CAP MAY BE SHIFTED AS NECESSARY TO CLEAR DOWELS.

THE CONCRETE IN THE SHADED AREA OF THE WING SHALL BE POURED AFTER THE VERTICAL CONCRETE BARRIER RAIL IS CAST IF SLIP FORMING IS USED.

FOR PILE SPLICE DETAILS, SEE SHEET 4 OF 4.

FOR WING DETAILS, SEE SHEET 3 OF 4.

PROJECT NO. 17BP.9.R.26
ROWAN COUNTY
STATION: 12+30.00 -L-
SHEET 1 OF 4

NORTH CAROLINA PROFESSIONAL SEAL 030046 ENGINEER MATTHEW PAYNE
DocuSigned by: 3C4001644640F4D7
6/10/2015

STATE OF NORTH CAROLINA
DEPARTMENT OF TRANSPORTATION
RALEIGH

SUBSTRUCTURE

END BENT No. 1

ASSEMBLED BY : C. BLAKES DATE : 2/13
CHECKED BY : M. PAYNE DATE : 2/13
DRAWN BY : CVC 6/10
CHECKED BY : DNS 6/10

ATKINS
1616 E. MILLBROOK ROAD, SUITE #310
RALEIGH, NORTH CAROLINA 27609
(919) 876-6888 NCBEES #F-0326

REVISIONS						SHEET NO.
NO.	BY:	DATE:	NO.	BY:	DATE:	S-8
1			3			TOTAL SHEETS
2			4			13

DocuSign Envelope ID: CA9E4F33-8DDF-412E-A0EA-D23883B709BC

NOTES

STIRRUPS IN CAP MAY BE SHIFTED AS NECESSARY TO CLEAR DOWELS.

THE CONCRETE IN THE SHADED AREA OF THE WING SHALL BE POURED AFTER THE VERTICAL CONCRETE BARRIER RAIL IS CAST IF SLIP FORMING IS USED.

FOR PILE SPLICE DETAILS, SEE SHEET 4 OF 4.

FOR WING DETAILS, SEE SHEET 3 OF 4.

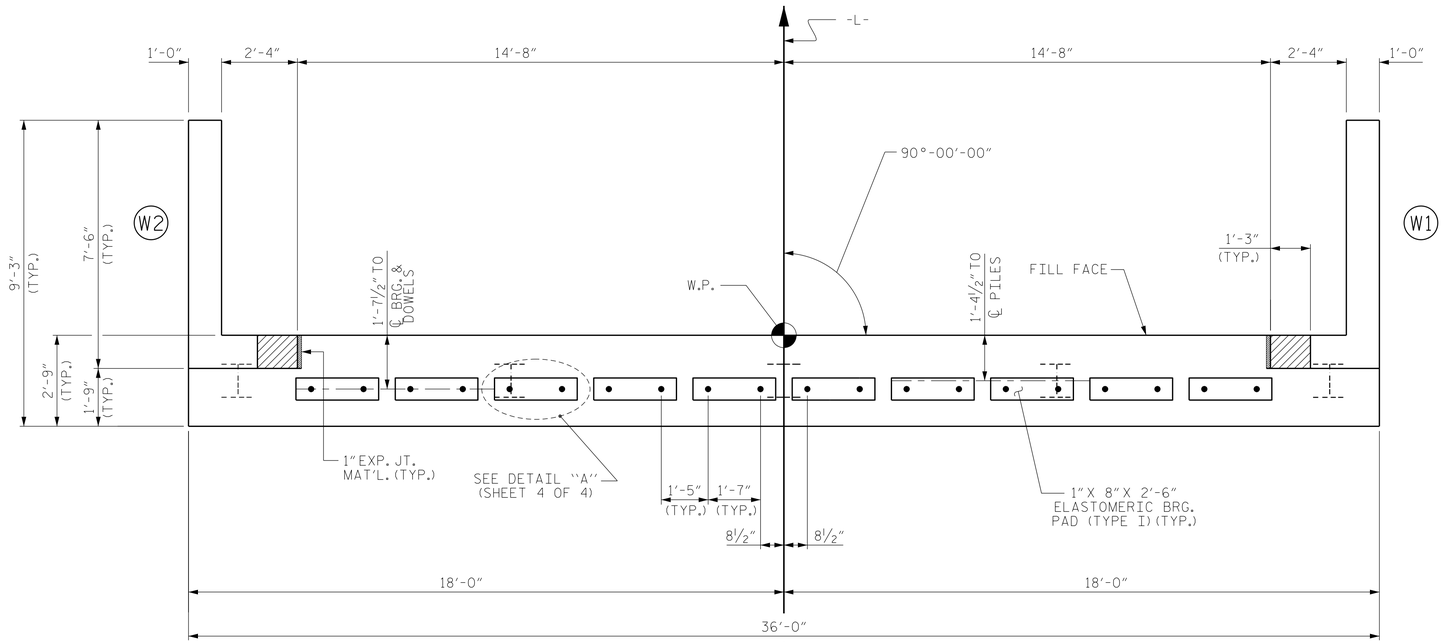

PLAN

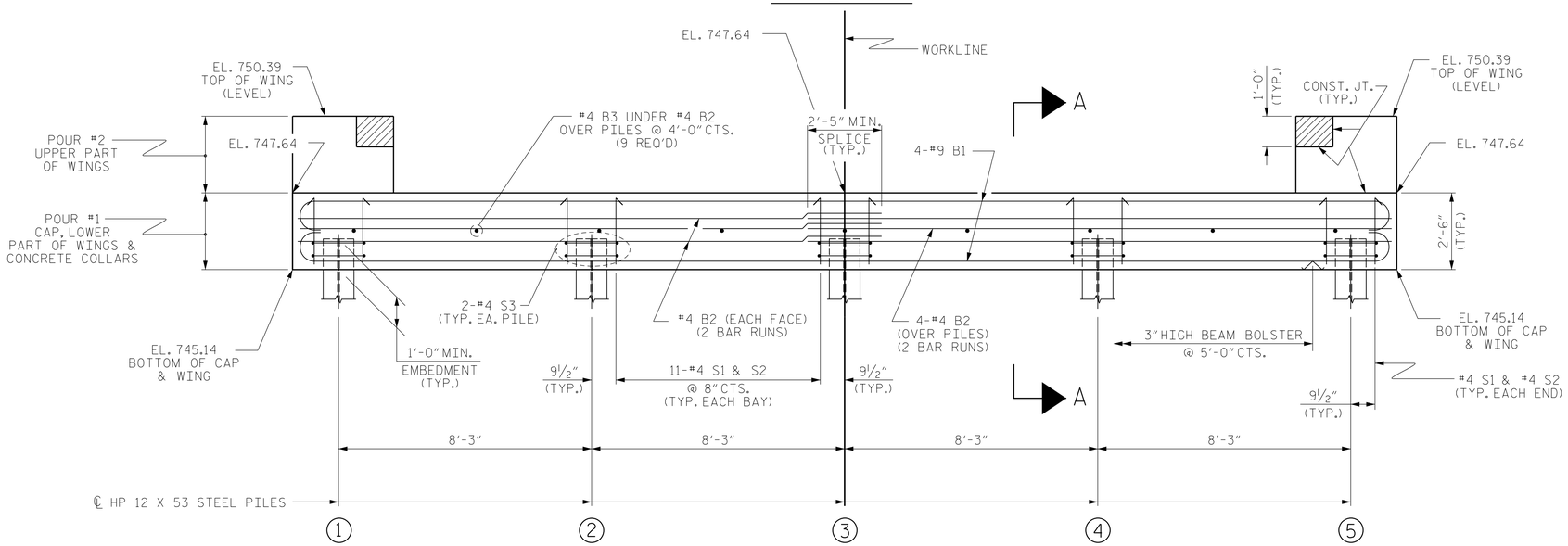

ELEVATION

WINGS NOT SHOWN FOR CLARITY.
FOR SECTION A-A, SEE SHEET 4 OF 4.
CONCRETE COLLARS FOR STEEL PILES NOT SHOWN IN PLAN AND ELEVATION VIEWS FOR CLARITY.
SEE "CORROSION PROTECTION FOR STEEL PILES DETAIL", SHEET 4 OF 4.

PROJECT NO. 17BP.9.R.26
ROWAN COUNTY
STATION: 12+30.00 -L-

SHEET 2 OF 4

NORTH CAROLINA PROFESSIONAL SEAL 030046 ENGINEER MATTHEW PAYNE
DocuSigned by: 3C4001664640F4D7...
6/10/2015

STATE OF NORTH CAROLINA
DEPARTMENT OF TRANSPORTATION
RALEIGH

SUBSTRUCTURE

END BENT No. 2

ASSEMBLED BY : C. BLAKES	DATE : 2/13
CHECKED BY : M. PAYNE	DATE : 5/15
DRAWN BY : DGE 01/10	REV. 4/15 MAA/TMG
CHECKED BY : MKT 01/10	

ATKINS
1616 E. MILLBROOK ROAD, SUITE #310
RALEIGH, NORTH CAROLINA 27609
(919) 876-6888 NCBEES #F-0326

REVISIONS								SHEET NO.
NO.	BY:	DATE:	NO.	BY:	DATE:			S-9
1			3					TOTAL SHEETS
2			4					13

DocuSign Envelope ID: CA9E4F33-8DDF-412E-A0EA-D23883B709BC

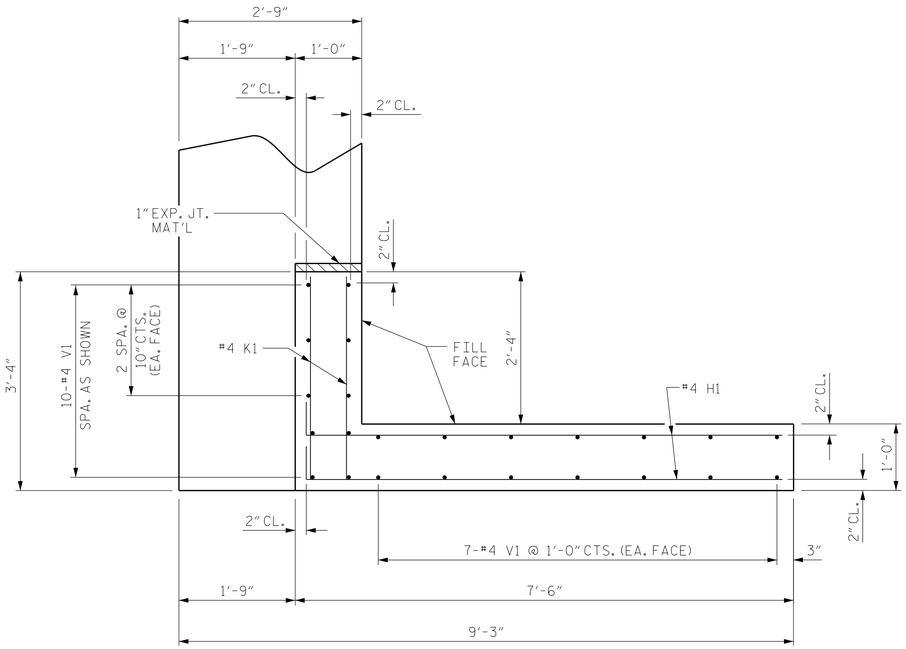

PLAN OF WING (W1)

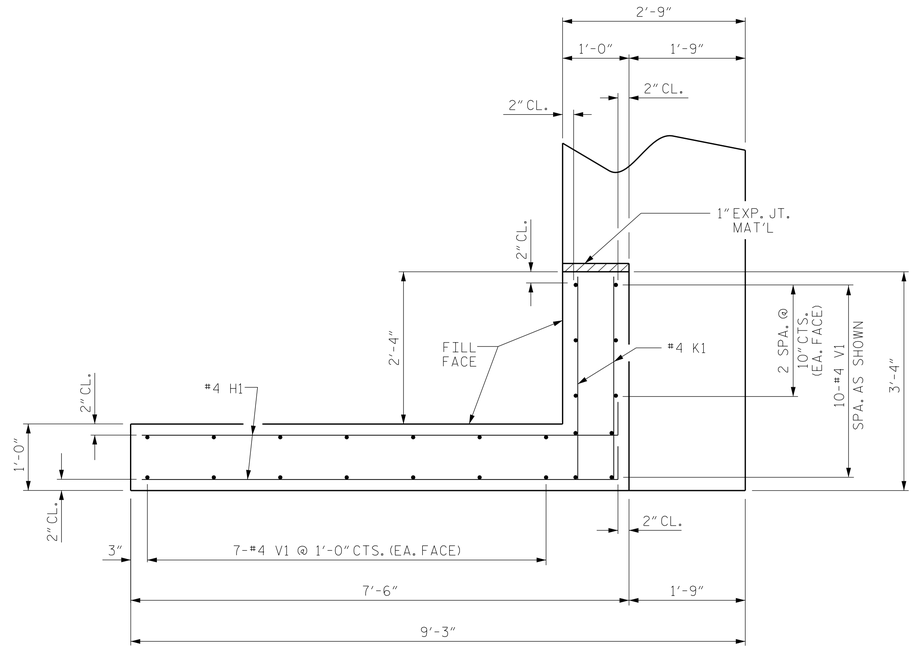

PLAN OF WING (W2)

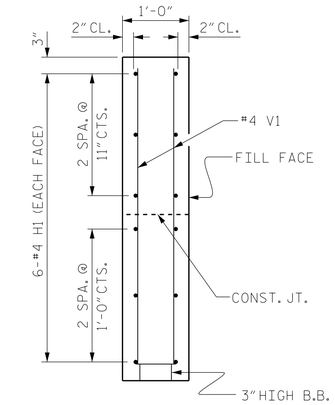

SECTION X-X

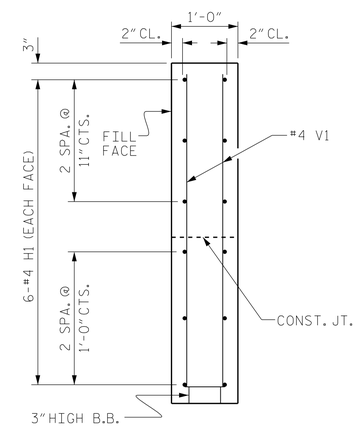

SECTION Y-Y

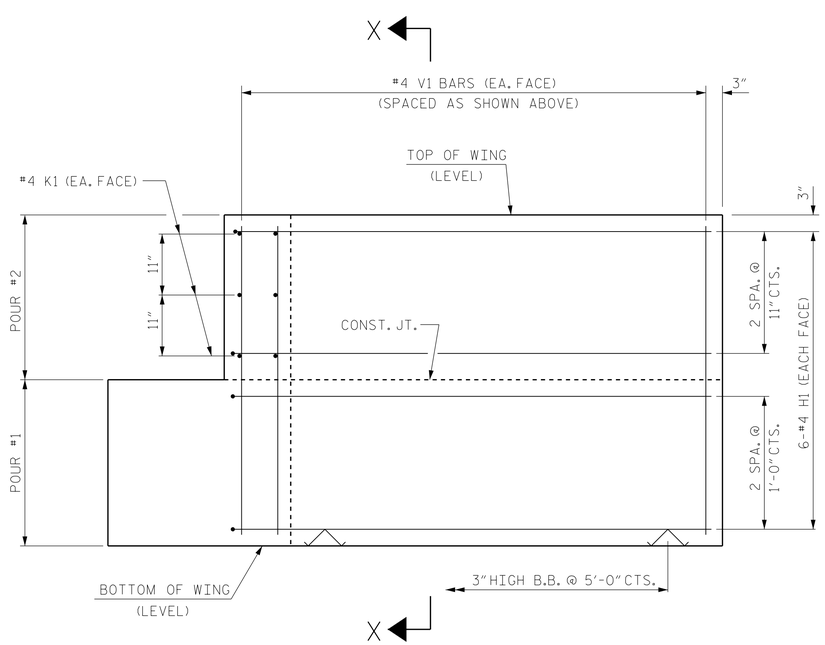

ELEVATION OF WING (W1)

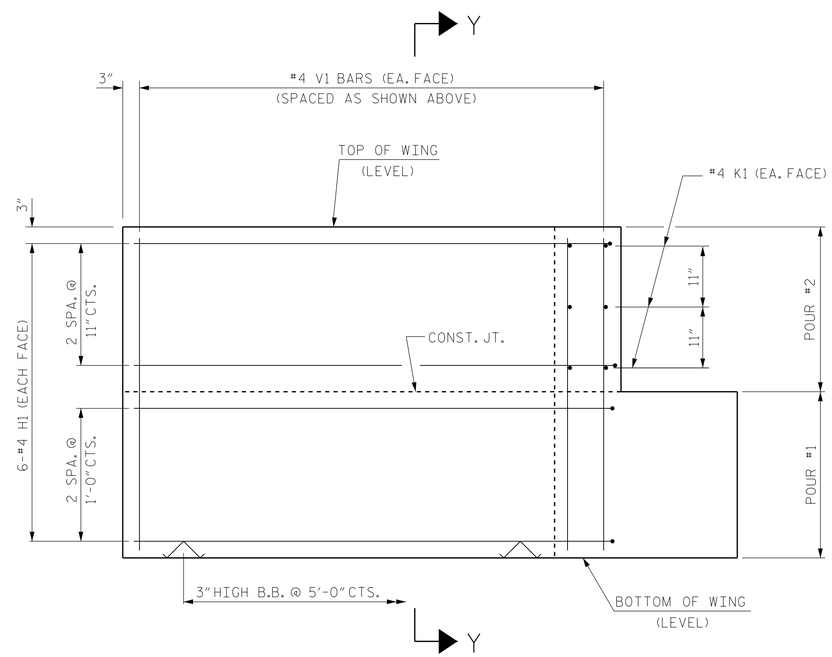

ELEVATION OF WING (W2)

WING DETAILS

PROJECT NO. 17BP.9.R.26

ROWAN COUNTY

STATION: 12+30.00 -L-

SHEET 3 OF 4

NORTH CAROLINA PROFESSIONAL SEAL 030046 ENGINEER MATTHEW PAYNE

DocuSigned by: 3C400164640F4D7 6/10/2015

STATE OF NORTH CAROLINA
DEPARTMENT OF TRANSPORTATION
RALEIGH

SUBSTRUCTURE

END BENT
WING DETAILS

ASSEMBLED BY : C. BLAKES	DATE : 2/13		
CHECKED BY : M. PAYNE	DATE : 5/15		
DRAWN BY : DGE 02/10	REV. 4/15	MAA/TMG	
CHECKED BY : MKT 02/10			

ATKINS
1616 E. MILLBROOK ROAD, SUITE #310
RALEIGH, NORTH CAROLINA 27609
(919) 876-6888 NCBEES #F-0326

REVISIONS						SHEET NO.
NO.	BY:	DATE:	NO.	BY:	DATE:	S-10
1			3			TOTAL SHEETS
2			4			13

STD. NO. EB_30_90S

DocuSign Envelope ID: CA9E4F33-8DDF-412E-A0EA-D23883B709BC

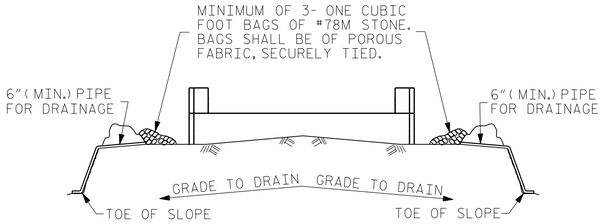

BAGGED STONE AND PIPE SHALL BE PLACED IMMEDIATELY AFTER COMPLETION OF END BENT EXCAVATION. PIPE MAY BE EITHER CONCRETE, CORRUGATED STEEL, CORRUGATED ALUMINUM ALLOY, OR CORRUGATED PLASTIC. PERFORATED PIPE WILL NOT BE ALLOWED.

BAGGED STONE SHALL REMAIN IN PLACE UNTIL THE ENGINEER DIRECTS THAT IT BE REMOVED. THE CONTRACTOR SHALL REMOVE AND DISPOSE OF SILT ACCUMULATIONS AT BAGGED STONE WHEN SO DIRECTED BY THE ENGINEER. BAGS SHALL BE REMOVED AND REPLACED WHENEVER THE ENGINEER DETERMINES THAT THEY HAVE DETERIORATED AND LOST THEIR EFFECTIVENESS.

NO SEPARATE PAYMENT WILL BE MADE FOR THIS WORK AND THE ENTIRE COST OF THIS WORK SHALL BE INCLUDED IN THE UNIT CONTRACT PRICE BID FOR THE SEVERAL PAY ITEMS.

TEMPORARY DRAINAGE AT END BENT

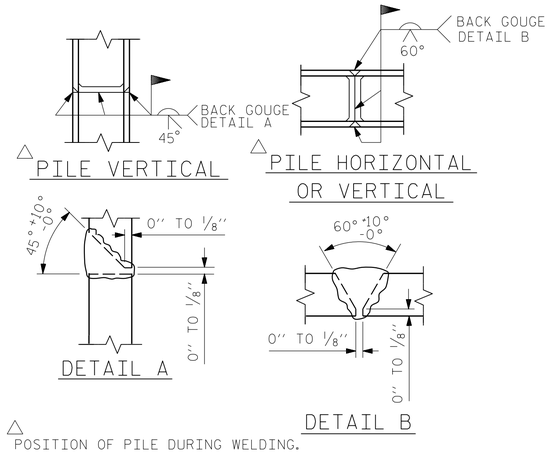

△ POSITION OF PILE DURING WELDING.

PILE SPLICE DETAILS

SCALE- 7/16" = 1'-0"

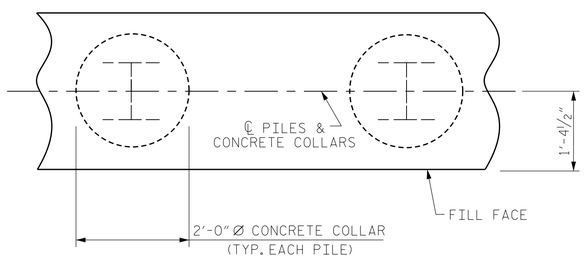

PLAN

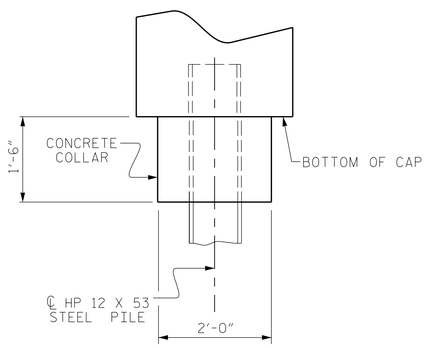

ELEVATION

CORROSION PROTECTION FOR STEEL PILES DETAIL

(END BENT No.1 SHOWN, END BENT No.2 SIMILAR BY ROTATION)

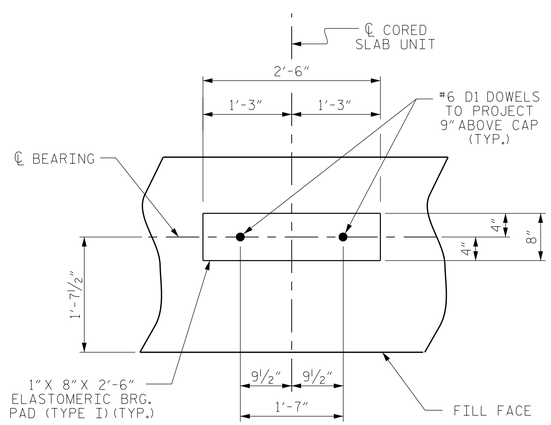

DETAIL "A"

(END BENT No.1 SHOWN, END BENT No.2 SIMILAR BY ROTATION)

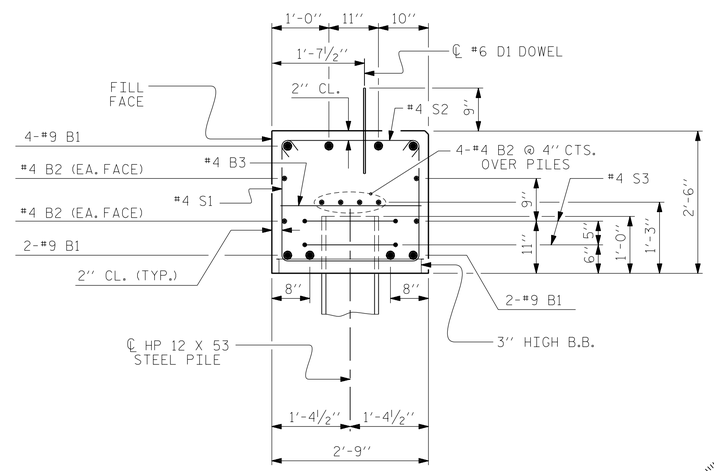

SECTION A-A

(CONCRETE COLLAR NOT SHOWN FOR CLARITY. SEE "CORROSION PROTECTION FOR STEEL PILES DETAIL.")

BAR TYPES

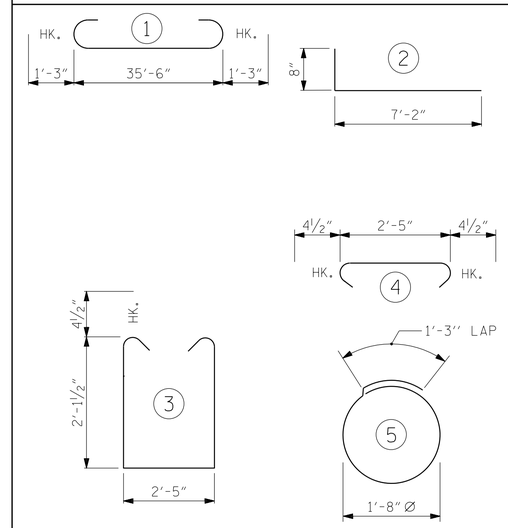

ALL BAR DIMENSIONS ARE OUT TO OUT.

END BENT No.1	END BENT No.2
HP 12 X 53 STEEL PILES	HP 12 X 53 STEEL PILES
NO: 5 LIN. FT.= 75	NO: 5 LIN. FT.= 75

BILL OF MATERIAL

FOR ONE END BENT

BAR	NO.	SIZE	TYPE	LENGTH	WEIGHT
B1	8	#9	1	38'-0"	1034
B2	16	#4	STR	19'-1"	204
B3	9	#4	STR	2'-5"	15
D1	20	#6	STR	1'-6"	45
H1	24	#4	2	7'-10"	126
K1	12	#4	STR	2'-11"	23
S1	46	#4	3	7'-5"	228
S2	46	#4	4	3'-2"	97
S3	10	#4	5	6'-6"	43
V1	48	#4	STR	4'-8"	150

REINFORCING STEEL (FOR ONE END BENT) 1965 LBS.

CLASS A CONCRETE BREAKDOWN (FOR ONE END BENT)

POUR #1 CAP, LOWER PART OF WINGS & COLLARS 11.2 C.Y.

POUR #2 UPPER PART OF WINGS 2.0 C.Y.

TOTAL CLASS A CONCRETE 13.2 C.Y.

PROJECT NO. 17BP.9.R.26

ROWAN COUNTY

STATION: 12+30.00 -L-

SHEET 4 OF 4

STATE OF NORTH CAROLINA
DEPARTMENT OF TRANSPORTATION
RALEIGH

SUBSTRUCTURE

END BENT No.1 & 2 DETAILS

NORTH CAROLINA PROFESSIONAL SEAL 030046 ENGINEER MATTHEW PAYNE
DocuSigned by: 3C4001646409F4D7...
6/10/2015

ATKINS
1616 E. MILLBROOK ROAD, SUITE #310
RALEIGH, NORTH CAROLINA 27609
(919) 876-6888 NCBEES #F-0326

ASSEMBLED BY : C. BLAKES	DATE : 2/13		
CHECKED BY : M. PAYNE	DATE : 5/15		
DRAWN BY : DGE 12/09	REV. 11/14 MAA/TMG		
CHECKED BY : MKT 01/10			

REVISIONS								SHEET NO.
NO.	BY:	DATE:	NO.	BY:	DATE:			S-11
1			3					TOTAL SHEETS
2			4					13

STD. NO. EB_30_90S

DocuSign Envelope ID: CA9E4F33-8DDF-412E-A0EA-D23883B709BC

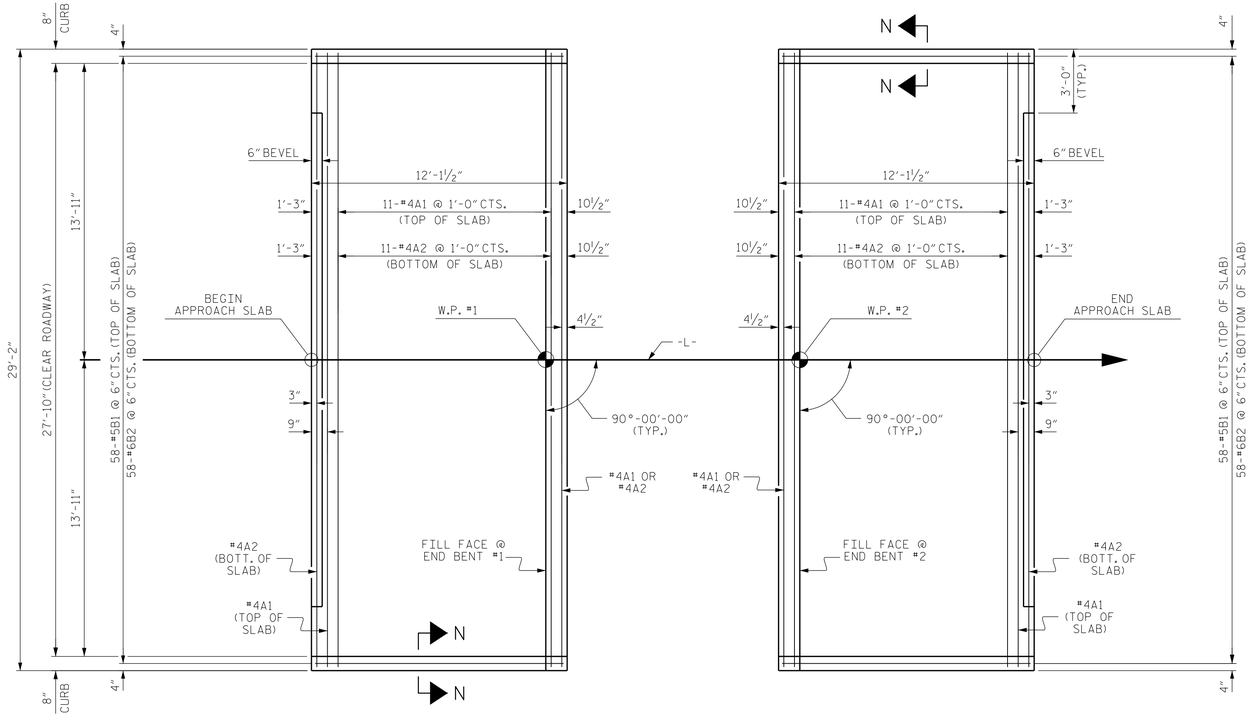

PLAN @ END BENT #1

PLAN @ END BENT #2

DIMENSIONS SHOWN ARE TYPICAL FOR BOTH APPROACH SLABS

NOTES

FOR BRIDGE APPROACH FILL INCLUDING GEOTEXTILE, 4"Ø DRAINAGE PIPE, AND #78M STONE BACKFILL, SEE ROADWAY PLANS.

GEOTEXTILE SHALL BE TYPE 1 IN ACCORDANCE WITH THE STANDARD SPECIFICATIONS SECTION 1056.

#78M STONE BACKFILL (CLASS V SELECT MATERIAL) SHALL BE IN ACCORDANCE WITH STANDARD SPECIFICATIONS SECTION 1016.

#78M STONE BACKFILL IS TO BE CONTINUOUS ALONG FILL FACE OF BACKWALL FROM OUTSIDE EDGE TO OUTSIDE EDGE OF APPROACH SLAB.

FOR THE 4"Ø DRAINAGE PIPE OUTLET(S), SEE ROADWAY STANDARD DRAWINGS.

AREA BETWEEN THE WINGWALL AND APPROACH SLAB SHALL BE GRADED TO DRAIN THE WATER AWAY FROM THE FILL FACE OF THE BRIDGE AND SHALL BE PAVED. SEE ROADWAY PLANS.

APPROACH SLAB GROOVING IS NOT REQUIRED.

BILL OF MATERIAL

APPROACH SLAB AT EB #1

BAR	NO.	SIZE	TYPE	LENGTH	WEIGHT
* A1	13	#4	STR	28'-10"	250
A2	13	#4	STR	28'-10"	250
* B1	58	#5	STR	11'-2"	676
B2	58	#6	STR	11'-8"	1016
REINFORCING STEEL				LBS.	1266
* EPOXY COATED REINFORCING STEEL				LBS.	926
CLASS AA CONCRETE				C.Y.	17.8

APPROACH SLAB AT EB #2

BAR	NO.	SIZE	TYPE	LENGTH	WEIGHT
* A1	13	#4	STR	28'-10"	250
A2	13	#4	STR	28'-10"	250
* B1	58	#5	STR	11'-2"	676
B2	58	#6	STR	11'-8"	1016
REINFORCING STEEL				LBS.	1266
* EPOXY COATED REINFORCING STEEL				LBS.	926
CLASS AA CONCRETE				C.Y.	17.8

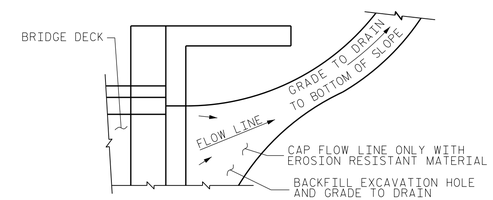

NOTE: IF THE APPROACH SLAB IS NOT CONSTRUCTED IMMEDIATELY AFTER THE BACKFILLING OF THE END BENT EXCAVATION, GRADE TO DRAIN TO THE BOTTOM OF THE SLOPE AND PROVIDE EROSION RESISTANT MATERIAL, SUCH AS FIBERGLASS ROVING OR AS DIRECTED BY THE ENGINEER TO PREVENT SOIL EROSION AND TO PROTECT THE AREA ADJACENT TO THE STRUCTURE. THE CONTRACTOR WILL BE REQUIRED TO REMOVE THESE MATERIALS PRIOR TO CONSTRUCTION OF THE APPROACH SLAB.

TEMPORARY DRAINAGE DETAIL

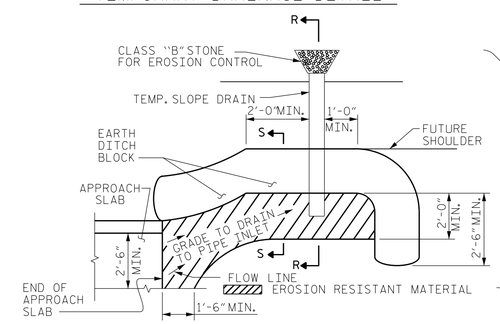

NOTE: IMMEDIATELY AFTER THE CONSTRUCTION OF THE APPROACH SLAB, THE CONTRACTOR SHALL PROVIDE TEMPORARY BERM AND SLOPE DRAIN. CONTRACTOR SHALL GRADE TO PIPE INLET AND PROVIDE EROSION RESISTANT MATERIAL AS SHOWN. THE EROSION RESISTANT MATERIAL SHALL BE EITHER 1) ASPHALT PLANT MIX, TYPE 1 OR TYPE 2, MIN. 2" DEPTH, 2) EROSION CONTROL MAT, OR 3) CONCRETE, AS DIRECTED BY THE ENGINEER. THE SLOPE DRAIN SHALL CONSIST OF A NON-PERFORATED TEMPORARY DRAINAGE PIPE, 12 INCHES IN DIAMETER.

PLAN VIEW

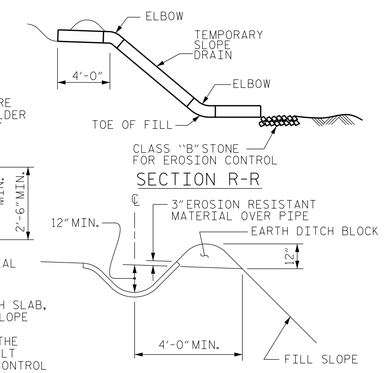

SECTION S-S

TEMPORARY BERM AND SLOPE DRAIN DETAILS

(TO BE USED WHEN SHOULDER BERM GUTTER IS REQUIRED)

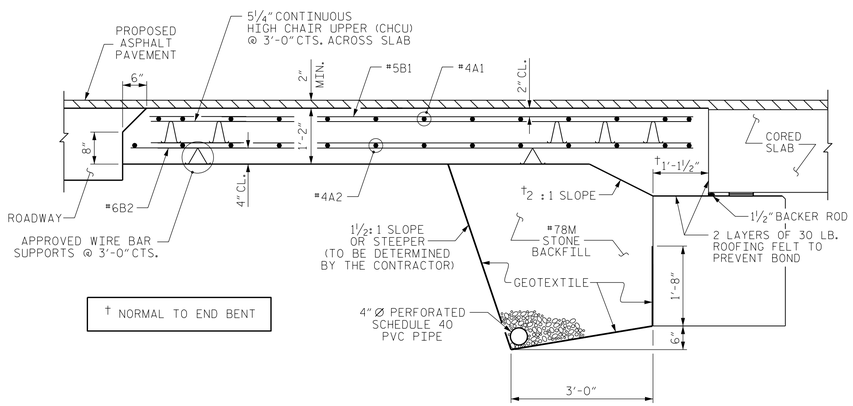

† NORMAL TO END BENT

SECTION THRU SLAB

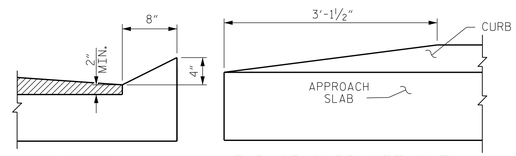

SECTION N-N

END OF CURB WITHOUT SHOULDER BERM GUTTER

CURB DETAILS

SPLICE LENGTHS		
BAR SIZE	EPOXY COATED	UNCOATED
#4	2'-0"	1'-9"
#5	2'-6"	2'-2"
#6	3'-10"	2'-7"

PROJECT NO. 17BP.9.R.26

ROWAN COUNTY

STATION: 12+30.00 -L-

NORTH CAROLINA PROFESSIONAL SEAL 030046 ENGINEER MATTHEW PAYNE

DocuSigned by: 3C4001B8040F4D7... 6/10/2015

ATKINS 1616 E. MILLBROOK ROAD, SUITE #310 RALEIGH, NORTH CAROLINA 27609 (919) 876-6888 NCBEES #F-0326

STATE OF NORTH CAROLINA
DEPARTMENT OF TRANSPORTATION
RALEIGH

STANDARD
BRIDGE APPROACH SLAB
FOR PRESTRESSED CONCRETE
CORED SLAB UNIT
(SUB-REGIONAL TIER)
90° SKEW

ASSEMBLED BY : C. BLAKES	DATE : 2/13
CHECKED BY : M. PAYNE	DATE : 5/15
DRAWN BY : SHS/MAA 5-09	REV. 12-11 MAA/AAC
CHECKED BY : BCH 5-09	REV. 8-14 MAA/TMG

REVISIONS							SHEET NO.
NO.	BY:	DATE:	NO.	BY:	DATE:		S-12
1			3				TOTAL SHEETS
2			4				13

STD. NO. BAS_30_90S

DocuSign Envelope ID: CA9E4F33-8DDF-412E-A0EA-D23883B709BC

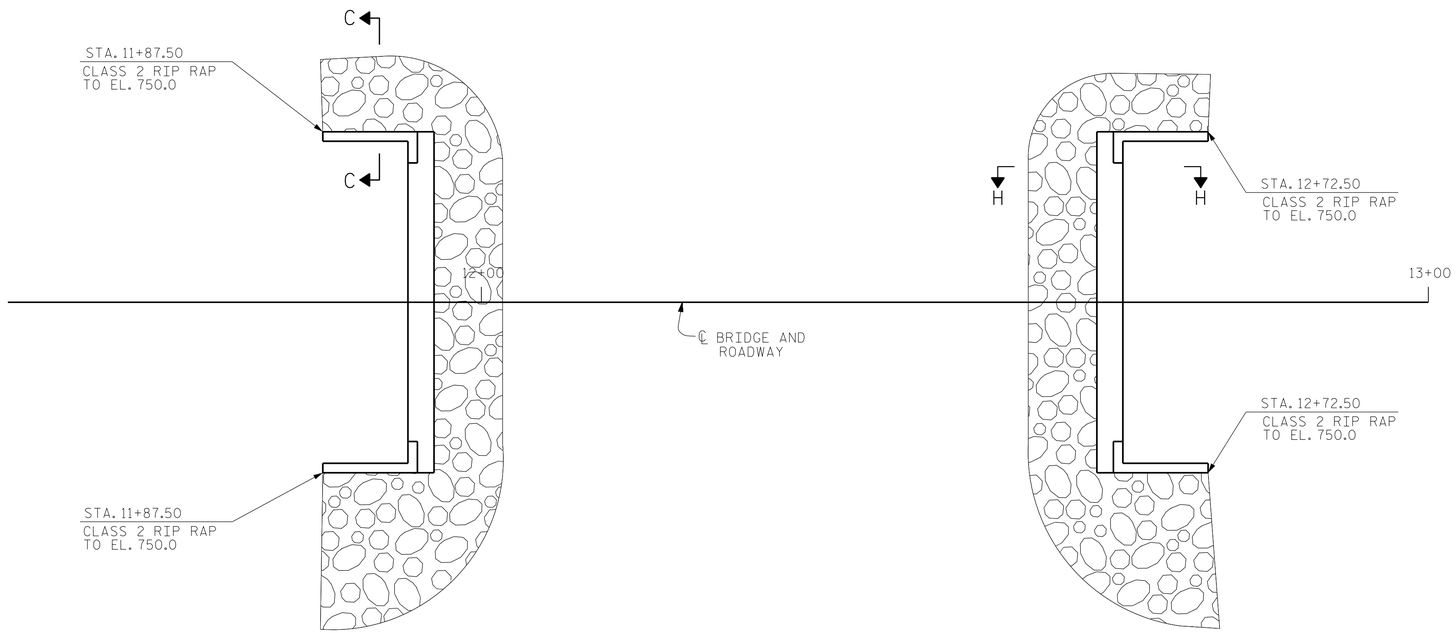

ESTIMATED QUANTITIES		
BRIDGE @ STA. 12+30.00	RIP RAP CLASS 2 (2'-0" THICK)	GEOTEXTILE FOR DRAINAGE
	TONS	SQUARE YARDS
END BENT 1	95	105
END BENT 2	91	101

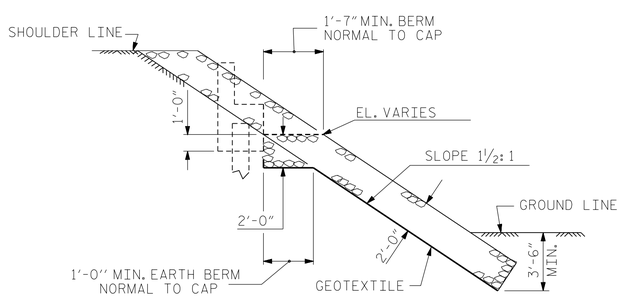

SECTION H-H

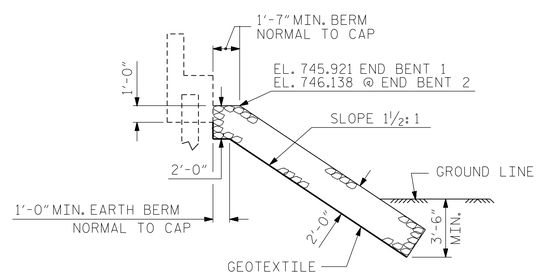

℄ SECTION

BERM RIP RAPPED

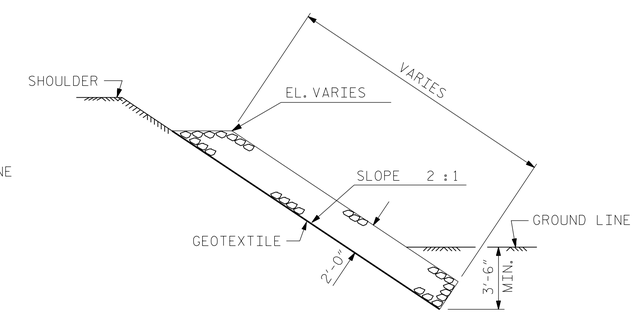

SECTION C-C

PROJECT NO. 17BP.9.R.26

ROWAN COUNTY

STATION: 12+30.00 -L-

NORTH CAROLINA PROFESSIONAL SEAL 030046 ENGINEER MATTHEW PAYNE

DocuSigned by: 6/10/2015

STATE OF NORTH CAROLINA
DEPARTMENT OF TRANSPORTATION
RALEIGH

STANDARD

RIP RAP DETAILS

ASSEMBLED BY : C. BLAKES DATE : 2/13
CHECKED BY : M. PAYNE DATE : 2/13
DRAWN BY : CVC 6/10
CHECKED BY : DNS 6/10

ATKINS
1616 E. MILLBROOK ROAD, SUITE #310
RALEIGH, NORTH CAROLINA 27609
(919) 876-6888 NCBEES #F-0326

REVISIONS						SHEET NO.
NO.	BY:	DATE:	NO.	BY:	DATE:	S-13
1			3			TOTAL SHEETS
2			4			13