STATE	STATE PROJECT REFERENCE NO.	SHEET NO.	TOTAL SHEETS
N.C.	BD-5109S	1	

STATE PROJ. NO.	F.A. PROJ. NO.	DESCRIPTION
45355.1.19	BRZ-1771(3)	PE
45355.2.19	BRZ-1771(3)	R/W, UTILITIES
45355.3.FD19	BRZ-1771(3)	CONSTR.

STATE OF NORTH CAROLINA
DIVISION OF HIGHWAYS

ROWAN COUNTY

LOCATION: REPLACE EXISTING BRIDGE NO. 16
SR 1771 – LYERLY RD.

TYPE OF WORK: GRADING, DRAINAGE, WIDENING, CORED SLAB BRIDGE AND PAVEMENT MARKINGS

See Sheet 1-A For Index of Sheets
See Sheet 1-B For Symbology Sheet

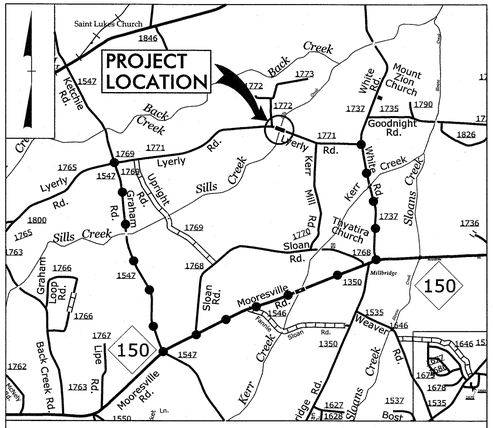

VICINITY MAP

DETOUR ROUTE

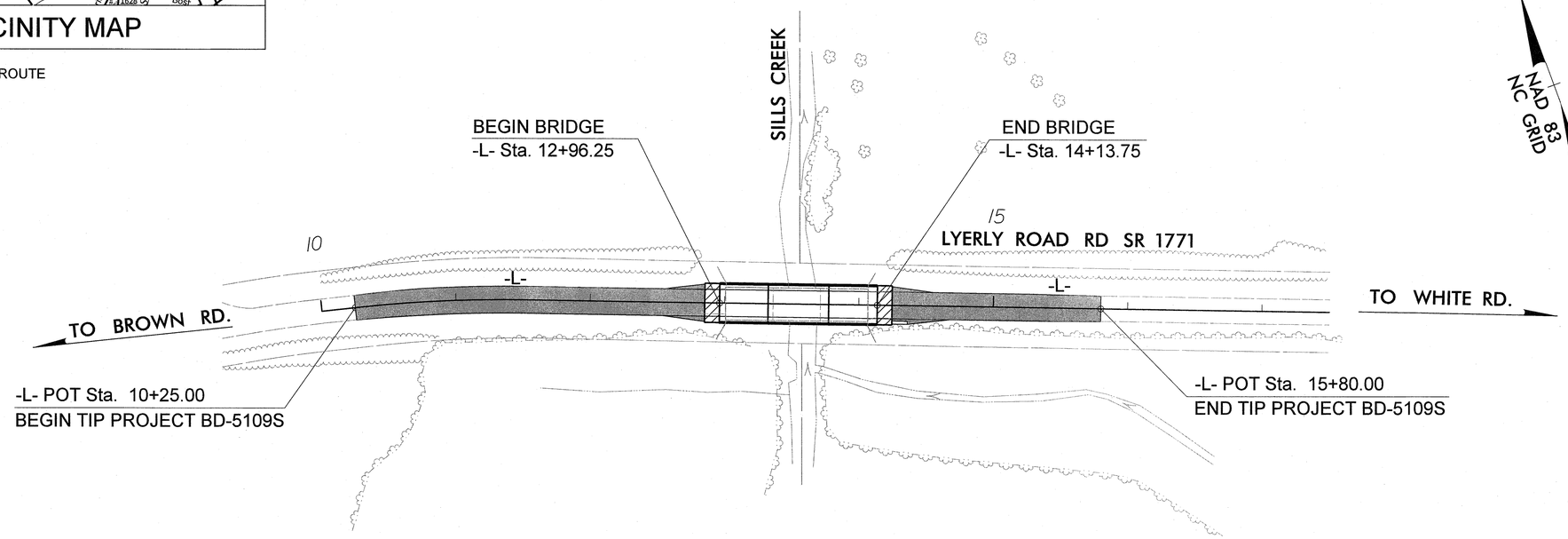

TIP PROJECT: BD-5109S

CONTRACT: DI00060

GRAPHIC SCALES

50 25 0 50 100
PLANS

50 25 0 50 100
PROFILE (HORIZONTAL)

10 5 0 10 20
PROFILE (VERTICAL)

DESIGN DATA

ADT 2009 = 250
V = 35 MPH

PROJECT LENGTH

LENGTH ROADWAY TIP PROJECT BD-5109S	=	0.083 MI
LENGTH STRUCTURE TIP PROJECT BD-5109S	=	0.022 MI
TOTAL LENGTH TIP PROJECT BD-5109S	=	0.105 MI

PLANS PREPARED BY:
PARSONS BRINCKERHOFF
434 FAYETTEVILLE STREET
SUITE 1500
RALEIGH, NC 27601
LICENSE NO. F-0165

2012 STANDARD SPECIFICATIONS

RIGHT OF WAY DATE:
AUGUST 2, 2012

LETTING DATE:
JUNE 11, 2014

NCDOT CONTACT:

PLANS PREPARED FOR:
DIVISION OF HIGHWAYS
1000 Birch Ridge Dr.
Raleigh NC, 27610

TIM HAYES, PE
PROJECT ENGINEER

ERIC MISAK
PROJECT DESIGN ENGINEER

MATTHEW JONES, PE
DIVISION BRIDGE – PROGRAM MANAGER

HYDRAULICS ENGINEER
NORTH CAROLINA PROFESSIONAL SEAL 032312 ENGINEER CHARLES W. HEARNE
SIGNATURE: 5-5-2014 P.E.

ROADWAY DESIGN ENGINEER
NORTH CAROLINA PROFESSIONAL SEAL 19563 ENGINEER MATTHEW SCOTT HAYES
SIGNATURE: 5/5/14 P.E.

DIVISION OF HIGHWAYS
STATE OF NORTH CAROLINA

STATE OF NORTH CAROLINA DEPARTMENT OF TRANSPORTATION

P.E.
STATE HIGHWAY DESIGN ENGINEER

09/08/99

2:26:00 PM
BD-5109S_Rdy_tsh.dgn
5/5/2014

PROJECT REFERENCE NO.	SHEET NO.
BD-5109S	1-A

ROADWAY DESIGN ENGINEER
NORTH CAROLINA PROFESSIONAL SEAL 19563 ENGINEER TIMOTHY SCOTT HAYES
5/5/14

INDEX OF SHEETS

SHEET NUMBER	SHEET
1	TITLE SHEET
1-A	INDEX OF SHEETS, GENERAL NOTES AND LIST OF STANDARD DRAWINGS
1-B	CONVENTIONAL SYMBOLS
1-C	SURVEY CONTROL SHEET
2	PAVEMENT SCHEDULE, TYPICAL SECTIONS, AND WEDGING DETAILS
2-A	STRUCTURE ANCHOR UNIT TYPE III
3	LIST OF PIPES, ENDWALLS, ETC. (FOR PIPES 48" & UNDER), GUARDRAIL SUMMARY, SUMMARY OF EARTHWORK, PAVEMENT REMOVAL SUMMARY AND SHOULDER BERM GUTTER SUMMARY
4	PLAN AND PROFILE SHEET
TCP-1 THRU TCP-2	TRAFFIC CONTROL PLANS
EC-1 THRU EC-2	EROSION CONTROL PLANS
X-1 THRU X-5	CROSS-SECTIONS
S-1 THRU S-20	STRUCTURE PLANS
SN	STRUCTURE STANDARD NOTES

2012 ROADWAY ENGLISH STANDARD DRAWINGS

The following Roadway Standards as appear in "Roadway Standard Drawings" Highway Design Branch - N. C. Department of Transportation - Raleigh, N. C., Dated January, 2012 are applicable to this project and by reference hereby are considered a part of these plans:

STD.NO.	TITLE
DIVISION 2 - EARTHWORK	
200.03	Method of Clearing - Method III
225.02	Guide for Grading Subgrade - Secondary and Local
225.04	Method of Obtaining Superelevation - Two Lane Pavement
DIVISION 3 - PIPE CULVERTS	
300.01	Method of Pipe Installation
DIVISION 4 - MAJOR STRUCTURES	
422.11	Reinforced Bridge Approach Fills - Sub Regional Tier
DIVISION 5 - SUBGRADE, BASES AND SHOULDERS	
560.01	Method of Shoulder Construction - High Side of Superelevated Curve - Method I
DIVISION 8 - INCIDENTALS	
806.01	Concrete Right-of-Way Marker
806.02	Granite Right-of-Way Marker
815.03	Pipe Underdrain and Blind Drain
840.00	Concrete Base Pad for Drainage Structures
840.25	Anchorage for Frames - Brick or Concrete or Precast
840.29	Frames and Narrow Slot Flat Grates
840.35	Traffic Bearing Grated Drop Inlet - for Cast Iron Double Frame and Grates
846.01	Concrete Curb, Gutter and Curb & Gutter
846.04	Drop Inlet Installation in Shoulder Berm Gutter
862.01	Guardrail Placement
862.02	Guardrail Installation
862.03	Structure Anchor Units
876.02	Guide for Rip Rap at Pipe Outlets

GENERAL NOTES:

2012 SPECIFICATIONS
EFFECTIVE: 01-17-12
REVISED: 11/01/11

GRADING AND SURFACING OR RESURFACING AND WIDENING:

THE GRADE LINES SHOWN DENOTE THE FINISHED ELEVATION OF THE PROPOSED SURFACING AT GRADE POINTS SHOWN ON THE TYPICAL SECTIONS. WHERE NO GRADE LINES ARE SHOWN, THE PROFILES SHOWN DENOTE THE TOP ELEVATION OF THE EXISTING PAVEMENT ALONG THE CENTER LINE OF SURVEY ON WHICH THE PROPOSED RESURFACING WILL BE PLACED. GRADE LINES MAY BE ADJUSTED BY THE ENGINEER IN ORDER TO SECURE A PROPER TIE-IN.

CLEARING:

CLEARING ON THIS PROJECT SHALL BE PERFORMED TO THE LIMITS ESTABLISHED BY METHOD III.

SUPERELEVATION:

ALL CURVES ON THIS PROJECT SHALL BE SUPERELEVATED IN ACCORDANCE WITH STD. NO. 225.04 USING THE RATE OF SUPERELEVATION AND RUNOFF SHOWN ON THE PLANS. SUPERELEVATION IS TO BE REVOLVED ABOUT THE GRADE POINTS SHOWN ON THE TYPICAL SECTIONS.

SHOULDER CONSTRUCTION:

ASPHALT, EARTH, AND CONCRETE SHOULDER CONSTRUCTION ON THE HIGH SIDE OF SUPERELEVATED CURVES SHALL BE IN ACCORDANCE WITH STD. NO. 560.01.

UNDERDRAINS:

UNDERDRAINS SHALL BE CONSTRUCTED IN ACCORDANCE WITH STD. NO. 815.03 AT LOCATIONS DIRECTED BY THE ENGINEER.

GUARDRAIL:

THE GUARDRAIL LOCATIONS SHOWN ON THE PLANS MAY BE ADJUSTED DURING CONSTRUCTION AS DIRECTED BY THE ENGINEER. THE CONTRACTOR SHOULD CONSULT WITH THE ENGINEER PRIOR TO ORDERING GUARDRAIL MATERIAL.

END BENTS:

THE ENGINEER SHALL CHECK THE STRUCTURE END BENT PLANS, DETAILS, AND CROSS-SECTION PRIOR TO SETTING OF THE SLOPE STAKES FOR THE EMBANKMENT OR EXCAVATION APPROACHING A BRIDGE.

UTILITIES:

UTILITY OWNERS ON THIS PROJECT ARE:

POWER - DUKE ENERGY - CONTACT: MR. JIM CARLSON 704-395-4393

RIGHT-OF-WAY MARKERS:

ALL RIGHT-OF-WAY MARKERS ON THIS PROJECT SHALL BE PLACED BY CONTRACT.

PROJECT REFERENCE NO.	SHEET NO.
BD-5109S	1-B

Note: Not to Scale

**S.U.E. = Subsurface Utility Engineering*

STATE OF NORTH CAROLINA
DIVISION OF HIGHWAYS

CONVENTIONAL PLAN SHEET SYMBOLS

BOUNDARIES AND PROPERTY:

- State Line
- County Line
- Township Line
- City Line
- Reservation Line
- Property Line
- Existing Iron Pin — EIP
- Property Corner
- Property Monument — ECM
- Parcel/Sequence Number — 123
- Existing Fence Line
- Proposed Woven Wire Fence
- Proposed Chain Link Fence
- Proposed Barbed Wire Fence
- Existing Wetland Boundary — WLB
- Proposed Wetland Boundary — WLB
- Existing Endangered Animal Boundary — EAB
- Existing Endangered Plant Boundary — EPB
- Known Soil Contamination: Boundary or Site
- Potential Soil Contamination: Boundary or Site

BUILDINGS AND OTHER CULTURE:

- Gas Pump Vent or U/G Tank Cap
- Sign — S
- Well — W
- Small Mine
- Foundation
- Area Outline
- Cemetery
- Building
- School
- Church
- Dam

HYDROLOGY:

- Stream or Body of Water
- Hydro, Pool or Reservoir
- Jurisdictional Stream — JS
- Buffer Zone 1 — BZ 1
- Buffer Zone 2 — BZ 2
- Flow Arrow
- Disappearing Stream
- Spring
- Wetland
- Proposed Lateral, Tail, Head Ditch — FLOW
- False Sump

RAILROADS:

- Standard Gauge — CSX TRANSPORTATION
- RR Signal Milepost — MILEPOST 35
- Switch — SWITCH
- RR Abandoned
- RR Dismantled

RIGHT OF WAY:

- Baseline Control Point
- Existing Right of Way Marker
- Existing Right of Way Line
- Proposed Right of Way Line — RW
- Proposed Right of Way Line with Iron Pin and Cap Marker — RW
- Proposed Right of Way Line with Concrete or Granite Marker — RW
- Existing Control of Access — CA
- Proposed Control of Access — CA
- Existing Easement Line — E
- Proposed Temporary Construction Easement — E
- Proposed Temporary Drainage Easement — TDE
- Proposed Permanent Drainage Easement — PDE
- Proposed Permanent Drainage / Utility Easement — DUE
- Proposed Permanent Utility Easement — PUE
- Proposed Temporary Utility Easement — TUE
- Proposed Aerial Utility Easement — AUE
- Proposed Permanent Easement with Iron Pin and Cap Marker

ROADS AND RELATED FEATURES:

- Existing Edge of Pavement
- Existing Curb
- Proposed Slope Stakes Cut — C
- Proposed Slope Stakes Fill — F
- Proposed Curb Ramp — CR
- Curb Cut Future Ramp — CCFR
- Existing Metal Guardrail
- Proposed Guardrail
- Existing Cable Guiderail
- Proposed Cable Guiderail
- Equality Symbol
- Pavement Removal

VEGETATION:

- Single Tree
- Single Shrub
- Hedge
- Woods Line
- Orchard
- Vineyard — Vineyard

EXISTING STRUCTURES:

MAJOR:

- Bridge, Tunnel or Box Culvert — CONC
- Bridge Wing Wall, Head Wall and End Wall — CONC WW

MINOR:

- Head and End Wall — CONC HW
- Pipe Culvert
- Footbridge
- Drainage Box: Catch Basin, DI or JB — CB
- Paved Ditch Gutter
- Storm Sewer Manhole — S
- Storm Sewer — S

UTILITIES:

POWER:

- Existing Power Pole
- Proposed Power Pole
- Existing Joint Use Pole
- Proposed Joint Use Pole
- Power Manhole — P
- Power Line Tower
- Power Transformer
- U/G Power Cable Hand Hole
- H-Frame Pole
- Recorded U/G Power Line — P
- Designated U/G Power Line (S.U.E.*) — P

TELEPHONE:

- Existing Telephone Pole
- Proposed Telephone Pole
- Telephone Manhole — T
- Telephone Booth
- Telephone Pedestal — T
- Telephone Cell Tower
- U/G Telephone Cable Hand Hole — HH
- Recorded U/G Telephone Cable — T
- Designated U/G Telephone Cable (S.U.E.*) — T
- Recorded U/G Telephone Conduit — TC
- Designated U/G Telephone Conduit (S.U.E.*) — TC
- Recorded U/G Fiber Optics Cable — T FO
- Designated U/G Fiber Optics Cable (S.U.E.*) — T FO

WATER:

- Water Manhole — W
- Water Meter
- Water Valve
- Water Hydrant
- Recorded U/G Water Line — W
- Designated U/G Water Line (S.U.E.*) — W
- Above Ground Water Line — A/G Water

TV:

- TV Satellite Dish
- TV Pedestal — C
- TV Tower
- U/G TV Cable Hand Hole — HH
- Recorded U/G TV Cable — TV
- Designated U/G TV Cable (S.U.E.*) — TV
- Recorded U/G Fiber Optic Cable — TV FO
- Designated U/G Fiber Optic Cable (S.U.E.*) — TV FO

GAS:

- Gas Valve
- Gas Meter
- Recorded U/G Gas Line — G
- Designated U/G Gas Line (S.U.E.*) — G
- Above Ground Gas Line — A/G Gas

SANITARY SEWER:

- Sanitary Sewer Manhole
- Sanitary Sewer Cleanout
- U/G Sanitary Sewer Line — SS
- Above Ground Sanitary Sewer — A/G Sanitary Sewer
- Recorded SS Forced Main Line — FSS
- Designated SS Forced Main Line (S.U.E.*) — FSS

MISCELLANEOUS:

- Utility Pole
- Utility Pole with Base
- Utility Located Object
- Utility Traffic Signal Box — S
- Utility Unknown U/G Line — ?UTL
- U/G Tank; Water, Gas, Oil
- Underground Storage Tank, Approx. Loc. — UST
- A/G Tank; Water, Gas, Oil
- Geoenvironmental Boring
- U/G Test Hole (S.U.E.*)
- Abandoned According to Utility Records — AATUR
- End of Information — E.O.I.

04/16/11

PROJECT REFERENCE NO.	SHEET NO.
BD-5109S	1-C
Location and Surveys	

SURVEY CONTROL SHEET BD-5109S
WBS 45355.1.19

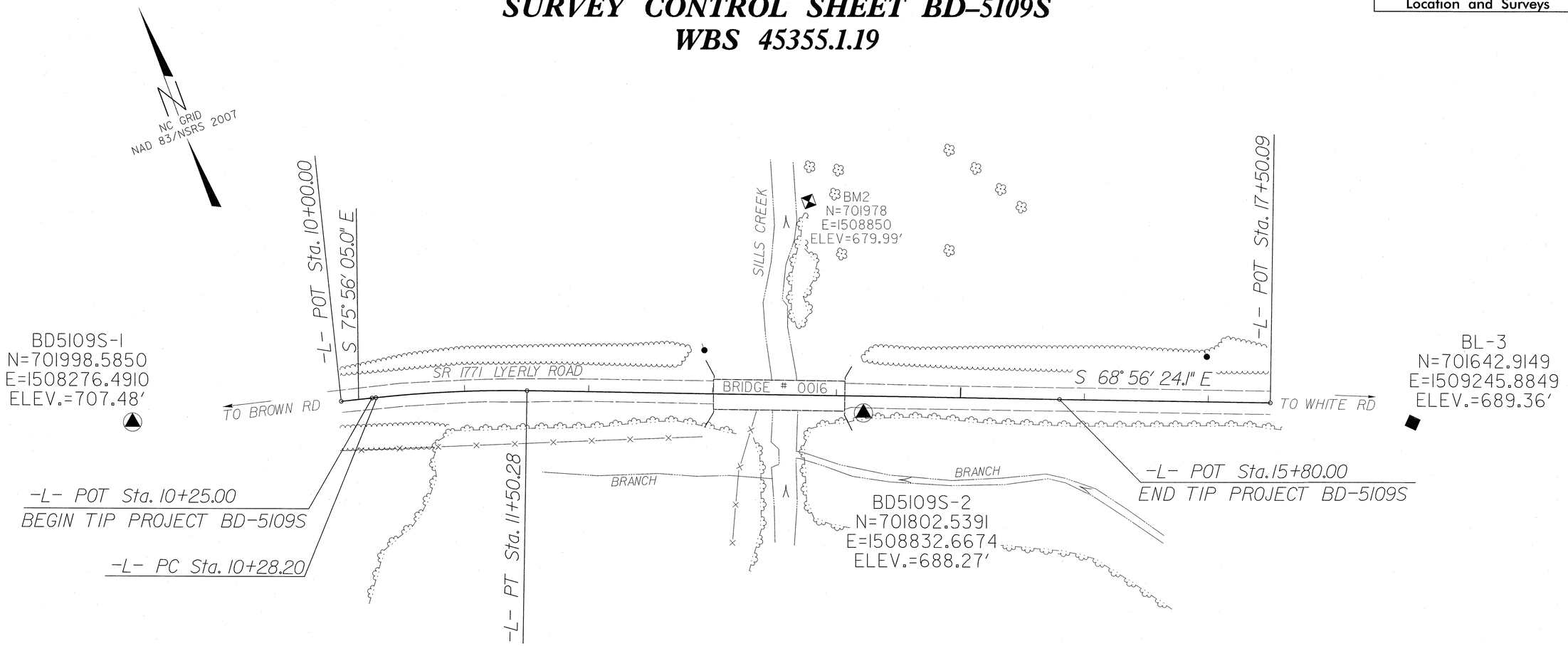

BL

POINT	DESC.	NORTH	EAST	ELEVATION	L STATION	OFFSET
1	BD5109S-1	701998.5850	1508276.4910	707.48	OUTSIDE PROJECT LIMITS	
2	BD5109S-2	701802.5391	1508832.6674	688.27	14+22.08	13.66 RT
3	BL-3	701642.9149	1509245.8849	689.36	OUTSIDE PROJECT LIMITS	

DATUM DESCRIPTION

THE LOCALIZED COORDINATE SYSTEM DEVELOPED FOR THIS PROJECT IS BASED ON THE STATE PLANE COORDINATES ESTABLISHED BY NCDOT FOR MONUMENT "BD5109S-1" WITH NAD 83/NSRS 2007 STATE PLANE GRID COORDINATES OF NORTHING: 701998.585(ft) EASTING: 1508276.491(ft) ELEVATION: 707.48(ft)
THE AVERAGE COMBINED GRID FACTOR USED ON THIS PROJECT (GROUND TO GRID) IS: 0.9998700043
THE N.C. LAMBERT GRID BEARING AND LOCALIZED HORIZONTAL GROUND DISTANCE FROM "BD5109S-1" TO -L- STATION 10+00.00 IS S 75° 37' 47.25" E 169.06'
ALL LINEAR DIMENSIONS ARE LOCALIZED HORIZONTAL DISTANCES
VERTICAL DATUM USED IS NAVD 88

BENCHMARKS (NAVD88)
****
BM1 ELEVATION = 707.48'
N 701999 E 1508276
L STATION 17+50.00
N 70°50'54.36" W DIST 917.99'
BM1=GPS1 IRON PIN AND ALUMINUM CAP SET AND BEING N 74°07'03" W 469.94' FROM NW END OF BRIDGE AND BEING 5.70' FROM NORTH EOP OF LYERLY ROAD (SR1771)
****
****
BM2 ELEVATION = 679.99'
N 701978 E 1508850
L STATION 13+75.00 157' LEFT
R/R SPIKE SET IN BASE OF 18" LOCUST TREE
****

NOTES:

1. *THE CONTROL DATA FOR THIS PROJECT CAN BE FOUND ELECTRONICALLY BY SELECTING PROJECT CONTROL DATA AT:*
HTTPS://CONNECT.NCDOT.GOV/RESOURCES/LOCATION/

THE FILES TO BE FOUND ARE AS FOLLOWS:
BD5109S_LS_CONTROL.TXT

SITE CALIBRATION INFORMATION HAS NOT BEEN PROVIDED FOR THIS PROJECT. IF FURTHER INFORMATION IS NEEDED, PLEASE CONTACT THE LOCATION AND SURVEYS UNIT.

INDICATES GEODETIC CONTROL MONUMENTS USED OR SET FOR HORIZONTAL PROJECT CONTROL BY THE NCDOT LOCATION AND SURVEYS UNIT.
PROJECT CONTROL ESTABLISHED USING GLOBAL POSITIONING SYSTEM.

NOTE: DRAWING NOT TO SCALE

6/2/99
2:13:03 PM
BD5109S_Ls_1c.dgn
6/5/2014

PROJECT REFERENCE NO.	SHEET NO.
BD-5109S	2
ROADWAY DESIGN ENGINEER	PAVEMENT DESIGN ENGINEER

NORTH CAROLINA PROFESSIONAL SEAL 19563 ENGINEER TIMOTHY SCOTT HAYES 5/5/14

PLANS PREPARED BY:
PARSONS BRINCKERHOFF
434 FAYETTEVILLE STREET
SUITE 1500
RALEIGH, NC 27601

PAVEMENT SCHEDULE

C1	PROPOSED APPROX. 1½" ASPHALT CONCRETE SURFACE COURSE, TYPE S9.5B, AT AN AVERAGE RATE OF 168 LBS. PER SQ. YARD.
C2	PROPOSED VARIABLE DEPTH ASPHALT CONCRETE SURFACE COURSE, TYPE S9.5B, AT AN AVERAGE RATE OF 112 LBS. PER SQ. YARD, PER 1" DEPTH, TO BE PLACED IN LAYERS NOT LESS THAN 1½" OR GREATER THAN 2" IN DEPTH.
D2	PROPOSED VARIABLE DEPTH ASPHALT CONCRETE INTERMEDIATE COURSE, TYPE I19.0B, AT AN AVERAGE RATE OF 114 LBS. PER SQ. YARD, PER 1" DEPTH, TO BE PLACED IN LAYERS NOT LESS THAN 2 1/2" OR GREATER THAN 4" IN DEPTH.
E1	PROPOSED APPROXIMATE 5½" ASPHALT CONCRETE BASE COURSE, TYPE B25.0B, AT AN AVERAGE RATE OF 627 LBS. PER SQ. YARD.
E2	PROPOSED VARIABLE DEPTH ASPHALT CONCRETE BASE COURSE, TYPE B25.0B, AT AN AVERAGE RATE OF 114 LBS. PER SQ. YARD, PER 1" DEPTH, TO BE PLACED IN LAYERS NOT LESS THAN 3" OR GREATER THAN 5 ½" IN DEPTH.
RI	SHOULDER BERM GUTTER
T	EARTH MATERIAL
U	EXISTING PAVEMENT
W	WEDGING DETAIL

NOTE: ALL PAVEMENT EDGE SLOPES ARE 1:1 UNLESS OTHERWISE SHOWN.

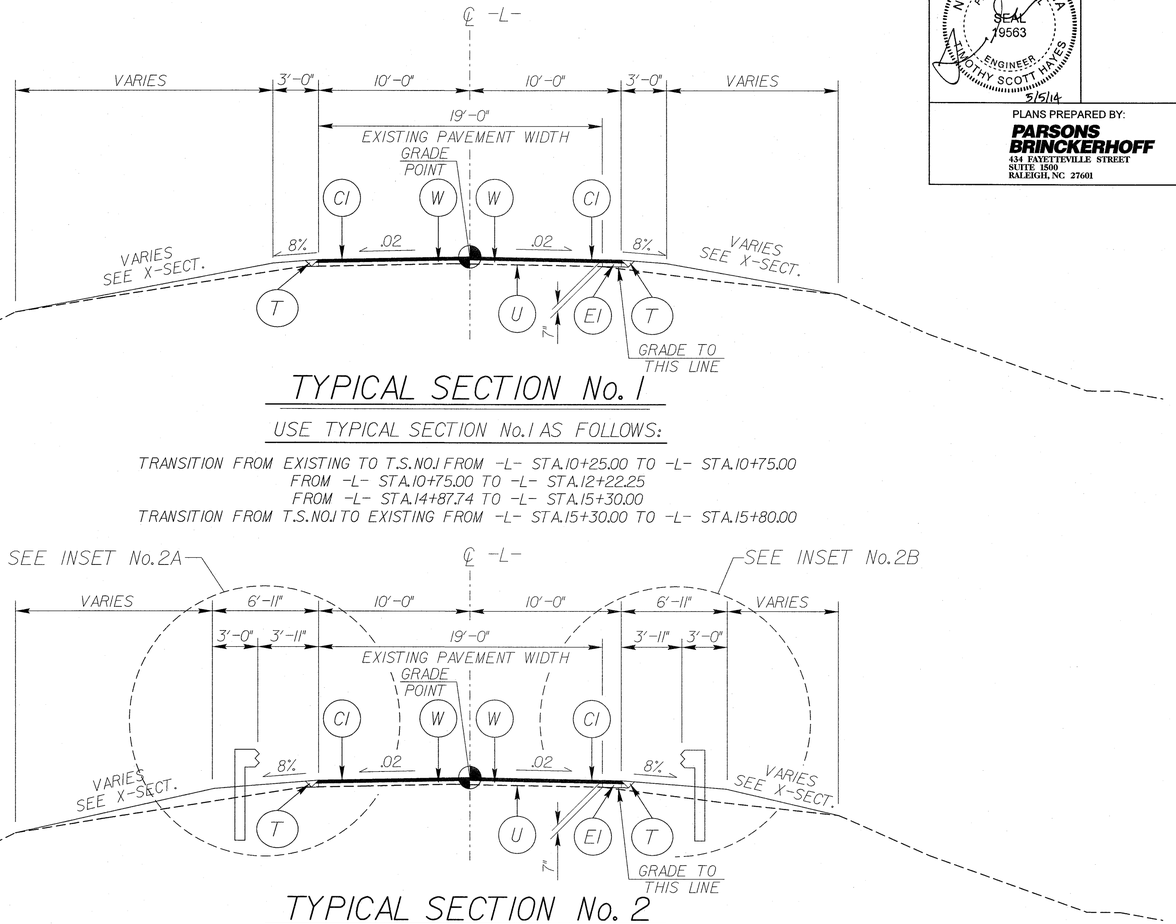

TYPICAL SECTION No. 1

USE TYPICAL SECTION No.1 AS FOLLOWS:

TRANSITION FROM EXISTING TO T.S. NO.1 FROM -L- STA.10+25.00 TO -L- STA.10+75.00
FROM -L- STA.10+75.00 TO -L- STA.12+22.25
FROM -L- STA.14+87.74 TO -L- STA.15+30.00
TRANSITION FROM T.S. NO.1 TO EXISTING FROM -L- STA.15+30.00 TO -L- STA.15+80.00

TYPICAL SECTION No. 2

USE TYPICAL SECTION No.2 AS FOLLOWS:

FROM -L- STA.12+22.25 TO -L- STA.12+96.25 (BEGIN BRIDGE)
FROM -L- STA.14+13.75 (END BRIDGE) TO -L- STA.14+87.74

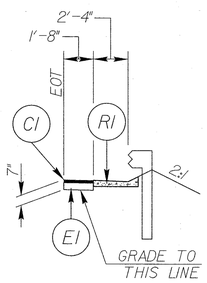

INSET No. 2B

USE INSET No.2B IN CONJUCTION w/TYPICAL SECTION No.2 AS FOLLOWS:

FROM -L- STA.14+24.75 (RT.) TO -L- STA.14+36.23 (RT.)

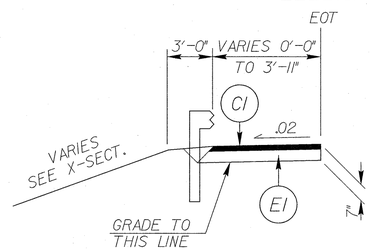

INSET No. 2A

(SEE PLANS FOR PAVED SHOULDER LOCATION)

USE INSET No.2A IN CONJUCTION w/TYPICAL SECTION No.2 AS FOLLOWS:

FROM -L- STA.12+53.92 (LT.) TO -L- STA.12+85.25 (LT.)
FROM -L- STA.12+53.92 (RT.) TO -L- STA.12+85.25 (RT.)
FROM -L- STA.14+24.75 (LT.) TO -L- STA.14+56.08 (LT.)
FROM -L- STA.14+36.27 (RT.) TO -L- STA.14+67.60 (RT.)

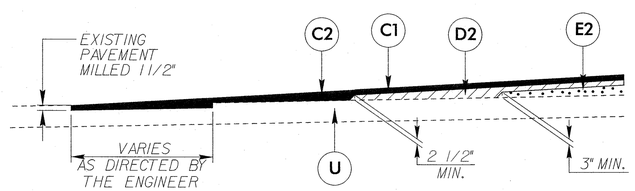

MILLING DETAIL FOR PROFILE CONNECTIONS

TYING PROPOSED PAVEMENTS TO EXISTING PAVEMENTS

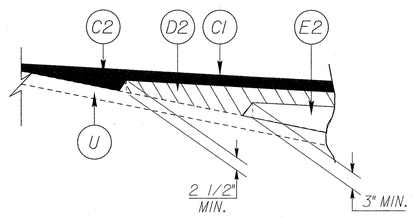

WEDGING DETAIL (W)

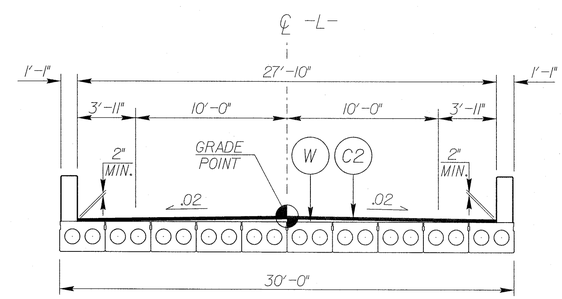

TYPICAL SECTION No. 3

USE TYPICAL SECTION No.3 AS FOLLOWS:

FROM -L- STA.12+96.25 (BEGIN BRIDGE) TO -L- STA.14+13.75 (END BRIDGE)

6/2/99

3:53:10 PM
BD5109S_Rdy_typ.dgn
5/5/2014

STATE OF NORTH CAROLINA
DEPT. OF TRANSPORTATION
DIVISION OF HIGHWAYS
RALEIGH, N.C.

ENGLISH DETAIL DRAWING FOR
STRUCTURE ANCHOR UNITS
GUARDRAIL ANCHOR UNIT, TYPE III FOR ATTACHMENT TO
RAIL ON BRIDGE - SUB REGIONAL TIER

SHEET 2 OF 7
862d03

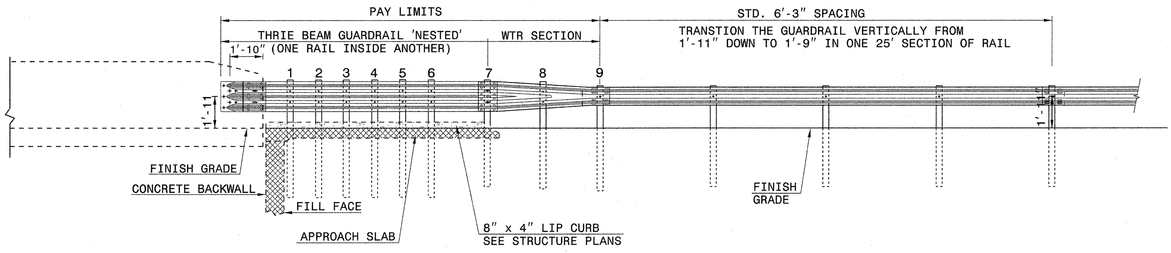

ELEVATION

NOTE:
**POST NOT REQUIRED FOR SKEW ANGLES GREATER THAN 150° OR LESS THAN 30° UNLESS OTHERWISE DIRECTED BY THE ENGINEER.
*THE DISTANCE FROM END OF BRIDGE RAIL TO CENTER LINE OF THE FIRST POST SHOULD BE 11½" IF CONCRETE BACKWALL IS NOT PRESENT.
-SHOULDER BERM GUTTER MUST BE INSTALLED TO THE LIMITS 8" x 4" LIP CURB IS SHOWN IF ANCHOR UNIT IS NOT ADJACENT TO AN APPROACH SLAB.
-MEASURE GUARDRAIL HEIGHT FROM THE TOP OF ADJACENT SURFACE (SHOULDER, BERM, OR GUTTER).
-LAP JOINTS IN THE DIRECTION OF TRAFFIC FLOW.
-SEE SHEET 5 FOR POST SECTIONS 1 THRU 9.

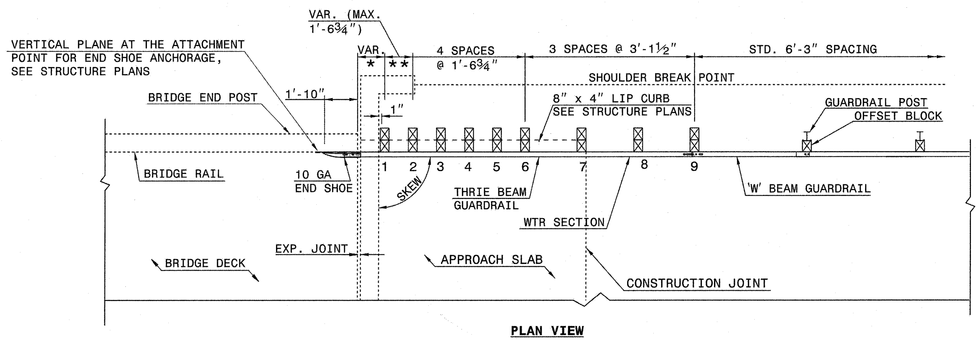

PLAN VIEW

GUARDRAIL ANCHOR UNIT, TYPE III FOR ATTACHMENT TO RAIL ON BRIDGE - SUB REGIONAL TIER

STATE OF NORTH CAROLINA
DEPT. OF TRANSPORTATION
DIVISION OF HIGHWAYS
RALEIGH, N.C.

ENGLISH DETAIL DRAWING FOR
STRUCTURE ANCHOR UNITS
GUARDRAIL ANCHOR UNIT, TYPE III FOR ATTACHMENT TO
RAIL ON BRIDGE - SUB REGIONAL TIER

SHEET 2 OF 7
862d03

STATE OF NORTH CAROLINA
DEPT. OF TRANSPORTATION
DIVISION OF HIGHWAYS
RALEIGH, N.C.

ENGLISH DETAIL DRAWING FOR
STRUCTURE ANCHOR UNITS
GUARDRAIL ANCHOR UNIT, TYPE III

SHEET 3 OF 7
862d03

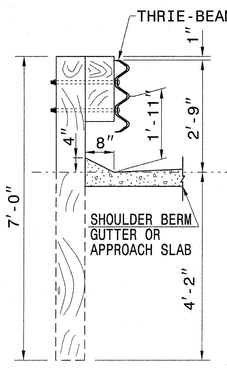

SECTION OF THRIE BEAM POSTS 1 THRU 6

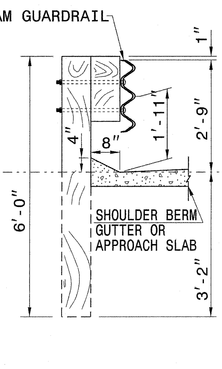

SECTION OF THRIE BEAM POST 7

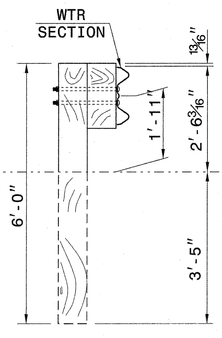

SECTION OF WTR BEAM POST 8

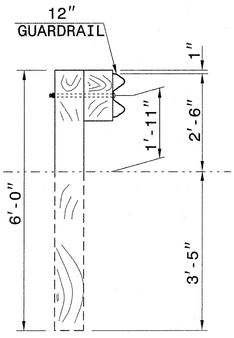

SECTION OF 'W' BEAM POST 9

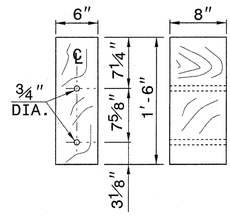

THRIE BEAM OFFSET BLOCK

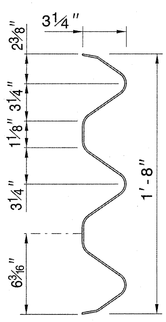

THRIE-BEAM SECTION

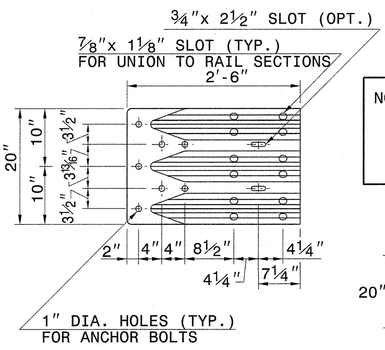

END SHOE

NOTE: THE MID POST AND OFFSET BLOCK OF THE WTR SECTION WILL REQUIRE SPECIAL BOLT HOLE DRILLING IN THE THRIE BEAM OFFSET BLOCK AND LINE POST.

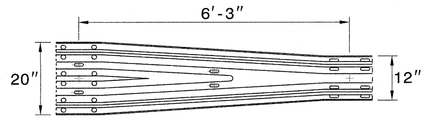

WTR SECTION
ELEVATION VIEW

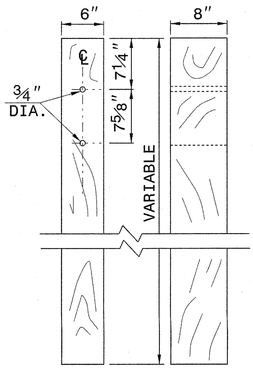

THRIE BEAM LINE POST

STATE OF NORTH CAROLINA
DEPT. OF TRANSPORTATION
DIVISION OF HIGHWAYS
RALEIGH, N.C.

ENGLISH DETAIL DRAWING FOR
STRUCTURE ANCHOR UNITS
GUARDRAIL ANCHOR UNIT, TYPE III

SHEET 3 OF 7
862d03

PROJECT REFERENCE NO.
BD-5109S

SHEET NO.
2-A

PROJECT REFERENCE NO.	SHEET NO.
BD-5109S	3

STATE OF NORTH CAROLINA
DIVISION OF HIGHWAYS

LIST OF PIPES, ENDWALLS, ETC. (FOR PIPES 48" & UNDER)

STATION / SIZE / THICKNESS OR GAUGE	LOCATION (LT,RT, OR CL)	STRUCTURE NO. FROM	STRUCTURE NO. TO	TOP ELEVATION	INVERT ELEVATION	INVERT ELEVATION	SLOPE CRITICAL	DRAINAGE PIPE (RCP, CSP, CAAP, HDPE, or PVC) 12"	15"	18"	24"	30"	36"	42"	48"	C.S. PIPE (UNLESS NOTED OTHRWISE) 12"	15"	18"	24"	30"	36"	42"	48"	CLASS III R.C. PIPE (UNLESS OTHERWISE NOTED) 12"	15"	18"	24"	30"	36"	42"	48"	15" SIDE DRAIN PIPE	18" SIDE DRAIN PIPE	24" SIDE DRAIN PIPE	ENDWALLS STD. 838.01, STD. 838.11 OR STD. 838.80 (UNLESS NOTED OTHERWISE) CU. YDS. R.C.P.	CU. YDS. C.S.P.	QUANTITIES FOR DRAINAGE STRUCTURES * TOTAL L.F. FOR PAY QUANTITY SHALL BE COL. 'A' + (1.3 X COL. 'B') PER EACH (0' THRU 5.0')	LIN. FT. A 5.0' THRU 10.0'	LIN. FT. B 10.0' AND ABOVE	C.B. STD. 840.01 OR STD. 840.02	FRAME, GRATES AND HOOD STANDARD 840.03 TYPE OF GRATE E	F	G	D.I. STD. 840.14 OR STD. 840.15	D.I. FRAME & GRATE STD. 840.16	G.D.I. TYPE "A" STD. 840.17 OR 840.26	G.D.I. TYPE "B" STD. 840.18 OR 840.27	G.D.I. TYPE "D" STD. 840.19 OR 840.28	G.D.I. FRAME WITH GRATE STD. 840.22	G.D.I. FRAME WITH TWO GRATES STD. 840.22	G.D.I. (N.S.) FRAME WITH GRATE STD. 840.29	G.D.I. (N.S.) FRAME WITH TWO GRATES STD. 840.29	J.B. STD. 840.31 OR 840.32	T.B.D.I. STD. 840.35	CORR. STEEL ELBOWS NO. & SIZE	CONC. COLLARS CL. "B" C.Y. STD. 840.72	CONC. & BRICK PIPE PLUG, C.Y. STD. 840.71	PIPE REMOVAL LIN.FT.	REMARKS
14+30	RT	2		689.09					28																											1										1		1									
		2	1		686.34	678.00																																																	
TOTALS									28																											1										1		1									

ABBREVIATIONS	
C.B.	CATCH BASIN
N.D.I.	NARROW DROP INLET
D.I.	DROP INLET
G.D.I.	GRATED DROP INLET
G.D.I. (N.S.)	GRATED DROP INLET (NARROW SLOT)
J.B.	JUNCTION BOX
M.H.	MANHOLE
T.B.D.I.	TRAFFIC BEARING DROP INLET
T.B.J.B.	TRAFFIC BEARING JUNCTION BOX

"N" = DISTANCE FROM EDGE OF LANE TO FACE OF GUARDRAIL.
TOTAL SHOULDER WIDTH = DISTANCE FROM EDGE OF TRAVEL LANE TO SHOULDER BREAK POINT.
FLARE LENGTH = DISTANCE FROM LAST SECTION OF PARALLEL GUARDRAIL TO END OF GUARDRAIL.
W = TOTAL WIDTH OF FLARE FROM BEGINNING OF TAPER TO END OF GUARDRAIL.
G = GATING IMPACT ATTENUATOR TYPE 350
NG = NON-GATING IMPACT ATTENUATOR TYPE 350

GUARDRAIL SUMMARY

SURVEY LINE	BEG. STA.	END STA.	LOCATION	LENGTH STRAIGHT	LENGTH SHOP CURVED	LENGTH DOUBLE FACED	WARRANT POINT APPROACH END	WARRANT POINT TRAILING END	"N" DIST. FROM E.O.L.	TOTAL SHOUL. WIDTH	FLARE LENGTH APPROACH END	FLARE LENGTH TRAILING END	W APPROACH END	W TRAILING END	ANCHORS XI MOD	XI	GRAU 350	M-350	III	CAT-1	VI MOD	BIC	AT-1	IMPACT ATTENUATOR TYPE 350 EA	G	NG	SINGLE FACED GUARDRAIL	REMOVE EXISTING GUARDRAIL	REMOVE AND STOCKPILE EXISTING GUARDRAIL	REMARKS
-L-	12+21.25	12+96.25	LT.	75'				12+96.25	3'-11"	6'-11"		50'		1'			1		1											
-L-	12+21.25	12+96.25	RT.	75'			12+96.25		3'-11"	6'-11"	50'		1'				1		1											
-L-	14+13.75	14+88.75	LT.	75'			14+13.75		3'-11"	6'-11"	50'		1'				1		1											
-L-	14+13.75	14+88.75	RT.	75'				14+13.75	3'-11"	6'-11"		50'		1'			1		1											
	LESS ANCHOR DEDUCTIONS																													
	TYPE 350	4 @ 50.00'	=	200'																										
	TYPE III	4 @ 18.75'	=	75'																										
			TOTAL	25.00'													4		4											

SUMMARY OF EARTHWORK

STATION	STATION	UNCL. EXCAV.	EMBANK. +%	BORROW	WASTE
10+25.00	12+85.25	1	343	342	0
14+24.75	15+80.00	2	85	83	0
SUBTOTALS:		3	428	425	0
WASTE TO REPLACE BORROW					
PROJECT TOTALS:		3	428	425	0
SAY:		10		430	

NOTE:
1) APPROXIMATE QUANTITIES ONLY. UNCLASSIFIED EXCAVATION, BORROW EXCAVATION, SHOULDER BORROW, FINE GRADING, CLEARING AND GRUBBING, BREAKING OF EXISTING PAVEMENT, AND REMOVAL OF EXISTING PAVEMENT WILL BE PAID FOR AT THE CONTRACT LUMP SUM PRICE FOR "GRADING."
2) EARTHWORK QUANTITIES EXCLUDE VOLUMES FOR "UNCLASSIFIED STRUCTURE EXCAVATION".

PAVEMENT REMOVAL SUMMARY

SURVEY LINE	STATION	STATION	LOCATION LT/RT/CL	YD²
-L-	12+85.25	13+00.78	CL	32
-L-	14+06.78	14+24.75	CL	39
			TOTAL:	71
			SAY:	75

SHOULDER BERM GUTTER SUMMARY

SURVEY LINE	STATION	STATION	LENGTH
-L-	14+24.75	14+36.23	11.5'
		TOTAL:	11.5'
		SAY:	12

12/19/07
12:54:16 PM
BD-5109S_Rdy_sum_3.dgn
4/30/2014

ROWAN COUNTY
LOW IMPACT BRIDGE

LS 09-11-093
WBS 45355.1.19
STRUCTURE 790016
TIP BD5109S

PROJECT REFERENCE NO.	SHEET NO.
BD-5109S	4
R/W SHEET NO.	

ROADWAY DESIGN ENGINEER: NORTH CAROLINA PROFESSIONAL SEAL 19563 ENGINEER TIMOTHY SCOTT HIVES 5/5/14

HYDRAULICS ENGINEER: NORTH CAROLINA PROFESSIONAL SEAL 032312 ENGINEER CHARLES W. HEARNE 5-5-2014

PLANS PREPARED BY:
PARSONS BRINCKERHOFF
434 FAYETTEVILLE STREET
SUITE 1500
RALEIGH, NC 27601
LICENSE NO. F-0165

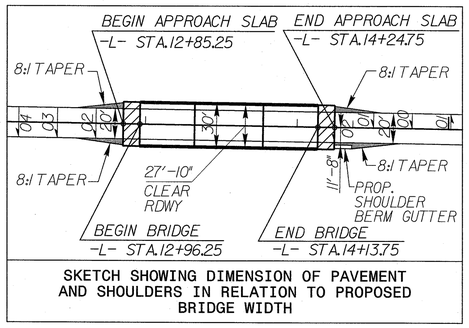

SKETCH SHOWING DIMENSION OF PAVEMENT AND SHOULDERS IN RELATION TO PROPOSED BRIDGE WIDTH

PAVED SHLD.

CURVE DATA
PI Sta 10+89.32
Δ = 6° 59' 40.8" (RT)
D = 5° 43' 46.5"
L = 122.08'
T = 61.12'
R = 1,000.00'
e = 8%
Ds = 55 mph
Runoff = 204'

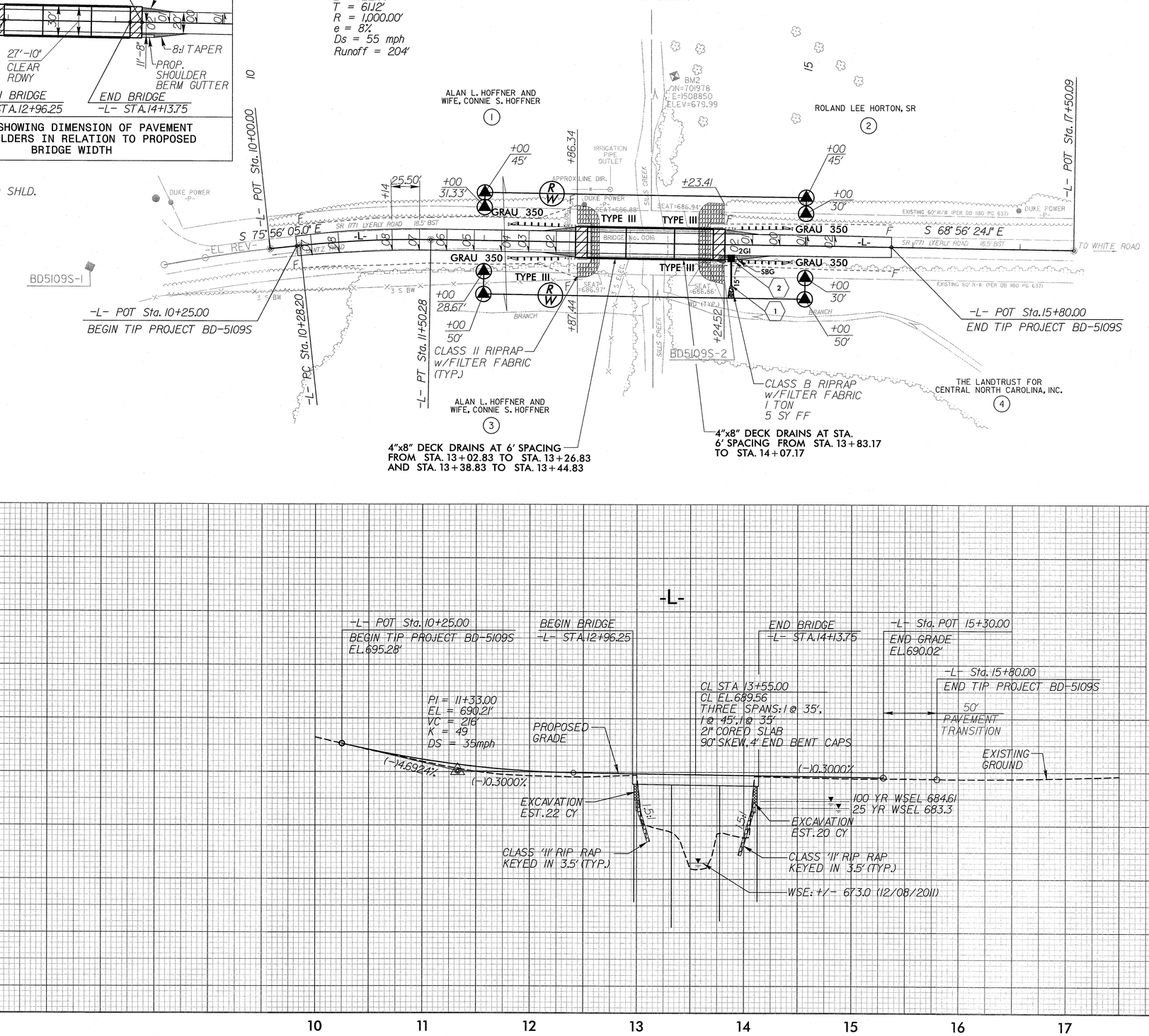

DETAIL A
2' X 2' SCOUR PAD
(Not to Scale)

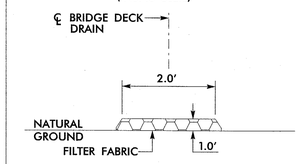

TYPE OF LINER: CLASS B RIP RAP

STA 13+02.83 RT
STA 13+08.83 RT
STA 13+14.83 RT
STA 13+20.83 RT
STA 13+26.83 RT
STA 13+38.83 RT
STA 13+44.53 RT
STA 13+89.17 RT
STA 13+95.17 RT
STA 14+07.17 RT

BRIDGE HYDRAULIC DATA

DESIGN DISCHARGE	= 3100	CFS
DESIGN FREQUENCY	= 25	YRS
DESIGN HW ELEVATION	= 683.3	FT
BASE DISCHARGE	= 4500	CFS
BASE FREQUENCY	= 100	YRS
BASE HW ELEVATION	= 684.6	FT
OVERTOPPING DISCHARGE	= 8800	CFS
OVERTOPPING FREQUENCY	= >500	YRS
OVERTOPPING ELEVATION	= 688.9	FT

8/17/99

2:28:05 PM
BD5109S_hdy_psh_sheet4.dgn
8/6/2014

STATE PROJECT REFERENCE NO.	SHEET NO.
BD-5109S	TCP-1

STATE OF NORTH CAROLINA
DIVISION OF HIGHWAYS

PLAN FOR PROPOSED TRAFFIC CONTROL, MARKING & DELINEATION

ROWAN COUNTY

ROADWAY STANDARD DRAWINGS

THE FOLLOWING ROADWAY STANDARDS AS APPEAR IN "ROADWAY STANDARD DRAWINGS" - PROJECT SERVICES UNIT - N.C. DEPARTMENT OF TRANSPORTATION - RALEIGH, N.C., DATED JULY 2012 ARE APPLICABLE TO THIS PROJECT AND BY REFERENCE HEREBY ARE CONSIDERED A PART OF THESE PLANS:

STD. NO.	TITLE
1101.03	TEMPORARY ROAD CLOSURES
1101.11	TRAFFIC CONTROL DESIGN TABLES
1110.01	STATIONARY WORK ZONE SIGNS
1145.01	BARRICADES
1205.01	PAVEMENT MARKINGS - LINE TYPES & OFFSETS
1205.02	PAVEMENT MARKINGS - 2 LANE & MULTILANE ROADWAYS
1205.12	PAVEMENT MARKINGS - BRIDGES
1261.01	GUARDRAIL & BARRIER DELINEATOR SPACING
1261.02	GUARDRAIL & BARRIER DELINEATOR TYPE
1262.01	GUARDRAIL END DELINEATION

INDEX OF SHEETS

SHEET NO.	TITLE
TCP-1	LIST OF APPLICABLE ROADWAY STANDARD DRAWINGS, LEGEND AND INDEX OF SHEETS
TCP-2	GENERAL NOTES, PHASING AND DETOUR SIGNING

LEGEND

GENERAL

- DIRECTION OF TRAFFIC FLOW
- NORTH ARROW
- PROPOSED PVMT. --------- EXIST. PVMT.
- WORK AREA
- MILL AND WEDGE
- REMOVAL OF EXISTING PAVEMENT

TRAFFIC CONTROL DEVICES

- TYPE I BARRICADE
- TYPE II BARRICADE
- TYPE III BARRICADE
- CONE
- DRUM
- SKINNY DRUM
- FLASHING ARROW PANEL (TYPE C)
- STATIONARY SIGN
- PORTABLE SIGN
- STATIONARY OR PORTABLE SIGN
- CRASH CUSHION
- CHANGEABLE MESSAGE SIGN
- TRUCK MOUNTED IMPACT ATTENUATOR (TMIA)
- POLICE
- FLAGGER

PAVEMENT MARKINGS

- CRYSTAL/CRYSTAL PAVEMENT MARKER
- YELLOW/YELLOW PAVEMENT MARKER
- CRYSTAL/RED PAVEMENT MARKER
- PAVEMENT MARKING SYMBOLS

APPROVED: _____

DATE: 5/5/14

SEAL

NORTH CAROLINA PROFESSIONAL SEAL 19563 ENGINEER TIMOTHY SCOTT HAYES

PARSONS BRINCKERHOFF
434 FAYETTEVILLE STREET
SUITE 1500
RALEIGH, NC 27601
LICENSE NO. F-0165

TIM HAYES, PE — PROJECT ENGINEER

ERIC MISAK — PROJECT DESIGN

TIP PROJECT: BD-5109S

1:00:53 PM
5109S_TC_TCP_TSH.dgn
4/30/2014

PROJ. REFERENCE NO.	SHEET NO.
BD-5109S	TCP-2

PARSONS BRINCKERHOFF
434 FAYETTEVILLE STREET
SUITE 1500
RALEIGH, NC 27601
LICENSE NO. F-0165

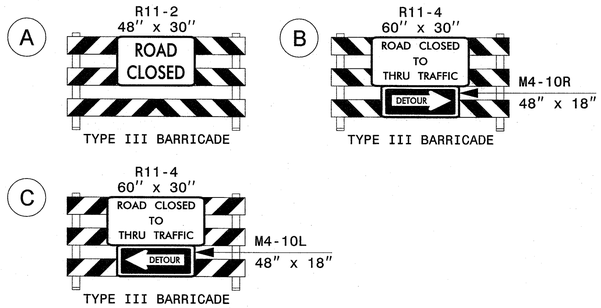

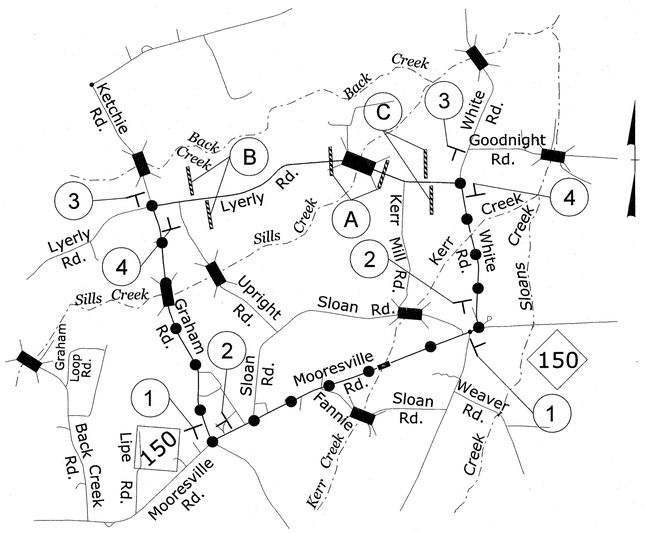

PROPOSED DETOUR

DETOUR ROUTE

DETOUR LENGTH 6.0 MILES

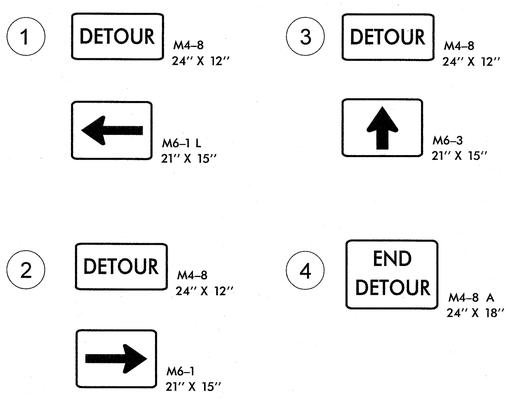

GENERAL NOTES

CHANGES MAY BE REQUIRED WHEN PHYSICAL DIMENSIONS IN THE DETAIL DRAWINGS, STANDARD DETAILS, AND ROADWAY DETAILS ARE NOT ATTAINABLE TO MEET FIELD CONDITIONS OR RESULT IN DUPLICATE OR UNDESIRED OVERLAPPING OF DEVICES. MODIFICATION MAY INCLUDE: MOVING, SUPPLEMENTING, COVERING, OR REMOVAL OF DEVICES AS DIRECTED BY THE ENGINEER.

THE FOLLOWING GENERAL NOTES APPLY AT ALL TIMES FOR THE DURATION OF THE CONSTRUCTION PROJECT EXCEPT WHEN OTHERWISE NOTED IN THE PLAN OR DIRECTED BY THE ENGINEER.

LANE AND SHOULDER CLOSURE REQUIREMENTS

A) REMOVE LANE CLOSURE DEVICES FROM THE LANE WHEN WORK IS NOT BEING PERFORMED BEHIND THE LANE CLOSURE OR WHEN A LANE CLOSURE IS NO LONGER NEEDED OR AS DIRECTED BY THE ENGINEER.

B) WHEN PERSONNEL AND/OR EQUIPMENT ARE WORKING WITHIN 15 FT OF AN OPEN TRAVEL LANE, CLOSE THE NEAREST OPEN SHOULDER USING ROADWAY STANDARD DRAWING NO. 1101.04 UNLESS THE WORK AREA IS PROTECTED BY BARRIER OR GUARDRAIL OR A LANE CLOSURE IS INSTALLED.

TRAFFIC PATTERN ALTERATIONS

C) NOTIFY THE ENGINEER TWENTY ONE (21) CALENDAR DAYS PRIOR TO ANY TRAFFIC PATTERN ALTERATION.

SIGNING

D) INSTALL ADVANCE WORK ZONE WARNING SIGNS WHEN WORK IS WITHIN 40 FT FROM THE EDGE OF TRAVEL LANE AND NO MORE THAN THREE (3) DAYS PRIOR TO THE BEGINNING OF CONSTRUCTION.

E) PROVIDE SIGNING AND DEVICES REQUIRED TO CLOSE THE ROAD ACCORDING TO THE ROADWAY STANDARD DRAWINGS AND TRAFFIC CONTROL PLANS.

PROVIDE SIGNING REQUIRED FOR THE OFF-SITE DETOUR ROUTE AS SHOWN ON THIS SHEET.

F) COVER OR REMOVE ALL SIGNS AND DEVICES REQUIRED TO CLOSE THE ROAD WHEN ROAD CLOSURE IS NOT IN OPERATION.

COVER OR REMOVE ALL SIGNS REQUIRED FOR THE OFF-SITE DETOUR WHEN THE DETOUR IS NOT IN OPERATION.

G) ENSURE ALL NECESSARY SIGNING IS IN PLACE PRIOR TO ALTERING ANY TRAFFIC PATTERN.

TRAFFIC CONTROL DEVICES

H) PLACE TYPE III BARRICADES, WITH "ROAD CLOSED" SIGN R11-2 ATTACHED, OF SUFFICIENT LENGTH TO CLOSE ENTIRE ROADWAY.

PAVEMENT MARKINGS AND MARKERS

I) INSTALL PAVEMENT MARKINGS ON THE FINAL SURFACE AS FOLLOWS:

ROAD NAME	MARKING
SR 1771 (LYERLY ROAD)	PAINT

J) TIE PROPOSED PAVEMENT MARKING LINES TO EXISTING PAVEMENT MARKING LINES.

K) REMOVE/REPLACE ANY CONFLICTING/DAMAGED PAVEMENT MARKINGS.

L) PASSING ZONE WILL BE DETERMINED IN THE FIELD AND MUST BE APPROVED BY THE ENGINEER.

PHASING

PHASE I

PRIOR TO ANY CONSTRUCTION OPERATIONS, PLACE AND COVER OFF-SITE DETOUR SIGNING AS SHOWN ON TCP-2 AND IN ACCORDANCE WITH RSD 1101.03 (SHEET 1 OF 9).

PHASE II

USING OFF-SITE DETOUR, UNCOVER DETOUR SIGNS, CLOSE -L- (SR 1771/LYERLY ROAD) TO TRAFFIC AND CONSTRUCT BRIDGE, APPROACHES AND ROADWAY UP TO AND INCLUDING FINAL LAYER OF SURFACE COURSE.

PHASE III

UPON COMPLETION OF BRIDGE, APPROACHES AND ROADWAY, PLACE FINAL PAVEMENT MARKING IN ACCORDANCE WITH RSD 1205.01. REMOVE BARRICADES AND DETOUR SIGNS AND OPEN -L- (SR 1771/LYERLY ROAD) TO TRAFFIC.

APPROVED: 5/5/14 DATE:

SEAL

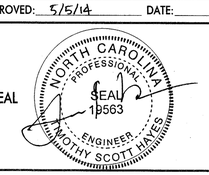

GENERAL NOTES, PHASING AND DETOUR SIGNING

SCALE:	NONE
DATE:	03/07/12
DWG. BY:	RGK
DESIGN BY:	EDM
REVIEWED BY:	TSH

REVISIONS

CADD FILE

I:\OPI\PM_5109S_TC_TCP_Sheet2.dgn
4/30/2014

PROJECT REFERENCE NO.	SHEET NO.
BD-5109S	EC-1
R/W SHEET NO.	

PARSONS BRINCKERHOFF
434 FAYETTEVILLE STREET
SUITE 1500
RALEIGH, NC 27601
LICENSE NO. F-0165

ROADSIDE ENVIRONMENTAL UNIT
DEPARTMENT OF TRANSPORTATION
DIVISION OF HIGHWAYS
RALEIGH, N.C.

2012 STANDARD SPECIFICATIONS

THESE EROSION AND SEDIMENT CONTROL PLANS COMPLY WITH THE REGULATIONS SET FORTH BY THE NCG-010000 GENERAL CONSTRUCTION PERMIT EFFECTIVE AUGUST 3, 2011 ISSUED BY THE NORTH CAROLINA DEPARTMENT OF ENVIRONMENT AND NATURAL RESOURCES DIVISION OF WATER QUALITY.

EROSION CONTROL PLAN

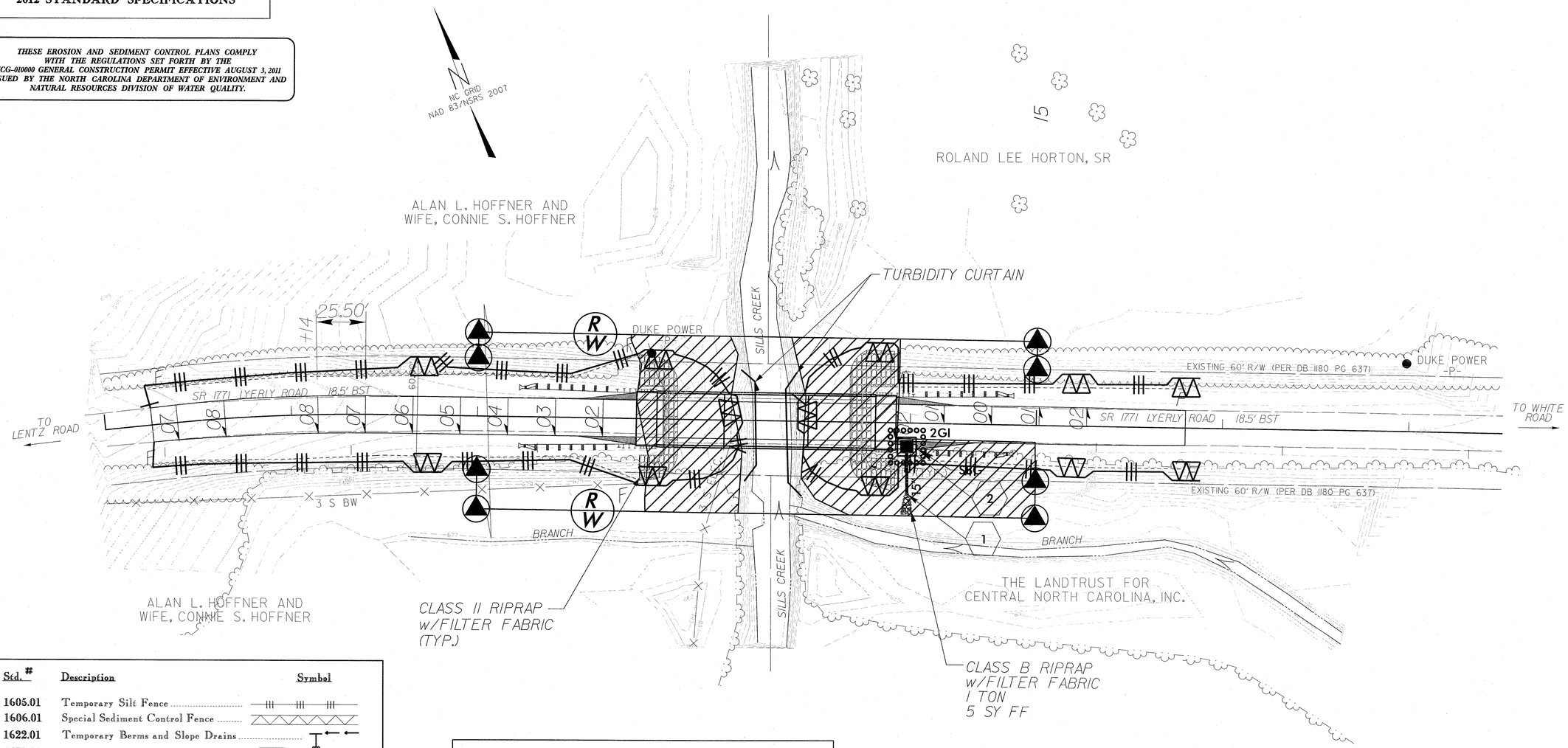

Std. #	Description	Symbol
1605.01	Temporary Silt Fence	
1606.01	Special Sediment Control Fence	
1622.01	Temporary Berms and Slope Drains	
1630.02	Silt Basin Type B	
1630.03	Temporary Silt Ditch	TSD
1630.05	Temporary Diversion	TD
1630.06	Special Stilling Basin	
1632.03	Rock Inlet Sediment Trap Type C	
1633.01	Temporary Rock Silt Check Type-A	
	Temporary Rock Silt Check Type-A with Matting and Polyacrylamide (PAM)	
1633.02	Temporary Rock Silt Check Type-B	
	Wattle	
	Wattle with Polyacrylamide (PAM)	
1634.02	Temporary Rock Sediment Dam Type-B	
1635.01	Rock Pipe Inlet Sediment Trap Type-A	

ENVIRONMENTALLY SENSITIVE AREA
SEE PROJECT SPECIAL PROVISIONS

CHARLES HEAFNER
LEVEL III NAME

3440
LEVEL III CERTIFICATION NO.

2012 STANDARD DRAWINGS

1604.01	Railroad Erosion Control Detail	1632.01	Rock Inlet Sediment Trap Type A
1605.01	Temporary Silt Fence	1632.02	Rock Inlet Sediment Trap Type B
1606.01	Special Sediment Control Fence	1632.03	Rock Inlet Sediment Trap Type C
1607.01	Gravel Construction Entrance	1633.01	Temporary Rock Silt Check Type A
1622.01	Temporary Berms and Slope Drains	1633.02	Temporary Rock Silt Check Type B
1630.01	Riser Basin	1634.01	Temporary Rock Sediment Dam Type A
1630.02	Silt Basin Type B	1634.02	Temporary Rock Sediment Dam Type B
1630.03	Temporary Silt Ditch	1635.01	Rock Pipe Inlet Sediment Trap Type A
1630.04	Stilling Basin	1635.02	Rock Pipe Inlet Sediment Trap Type B
1630.05	Temporary Diversion	1640.01	Coir Fiber Baffle
1630.06	Special Stilling Basin	1645.01	Temporary Stream Crossing
1631.01	Matting Installation		

NOTES: ANY DEVIATION FROM OPTIONS GIVEN WILL REQUIRE PRIOR APPROVAL BY ENGINEER.

ADDITIONAL EROSION CONTROL DEVICES MAY NEED TO BE INSTALLED AS DIRECTED BY THE ENGINEER.

Scale 1" = 30'
30' 0 30' 60'

5/14/99

PROJECT REFERENCE NO.	SHEET NO.
BD-5109S	EC-2

PARSONS BRINCKERHOFF
434 FAYETTEVILLE STREET
SUITE 1500
RALEIGH, NC 27601
LICENSE NO. F-0165

DIVISION OF HIGHWAYS
STATE OF NORTH CAROLINA

SOIL STABILIZATION TIMEFRAMES

SITE DESCRIPTION	STABILIZATION TIME	TIMEFRAME EXCEPTIONS
PERIMETER DIKES, SWALES, DITCHES AND SLOPES	7 DAYS	NONE
HIGH QUALITY WATER (HQW) ZONES	7 DAYS	NONE
SLOPES STEEPER THAN 3:1	7 DAYS	IF SLOPES ARE 10' OR LESS IN LENGTH AND ARE NOT STEEPER THAN 2:1, 14 DAYS ARE ALLOWED.
SLOPES 3:1 OR FLATTER	14 DAYS	7 DAYS FOR SLOPES GREATER THAN 50' IN LENGTH.
ALL OTHER AREAS WITH SLOPES FLATTER THAN 4:1	14 DAYS	NONE, EXCEPT FOR PERIMETERS AND HQW ZONES.

8/23/99

0 2.5 5	PROJ. REFERENCE NO.	SHEET NO.
	BD-5109S	X-1

NOTE: APPROXIMATE QUANTITIES ONLY. UNCLASSIFIED EXCAVATION, BORROW EXCAVATION, SHOULDER BORROW, FINE GRADING, CLEARING AND GRUBBING, BREAKING OF EXISTING PAVEMENT, AND REMOVAL OF EXISTING PAVEMENT WILL BE PAID FOR AT THE CONTRACT LUMP SUM PRICE FOR "GRADING."

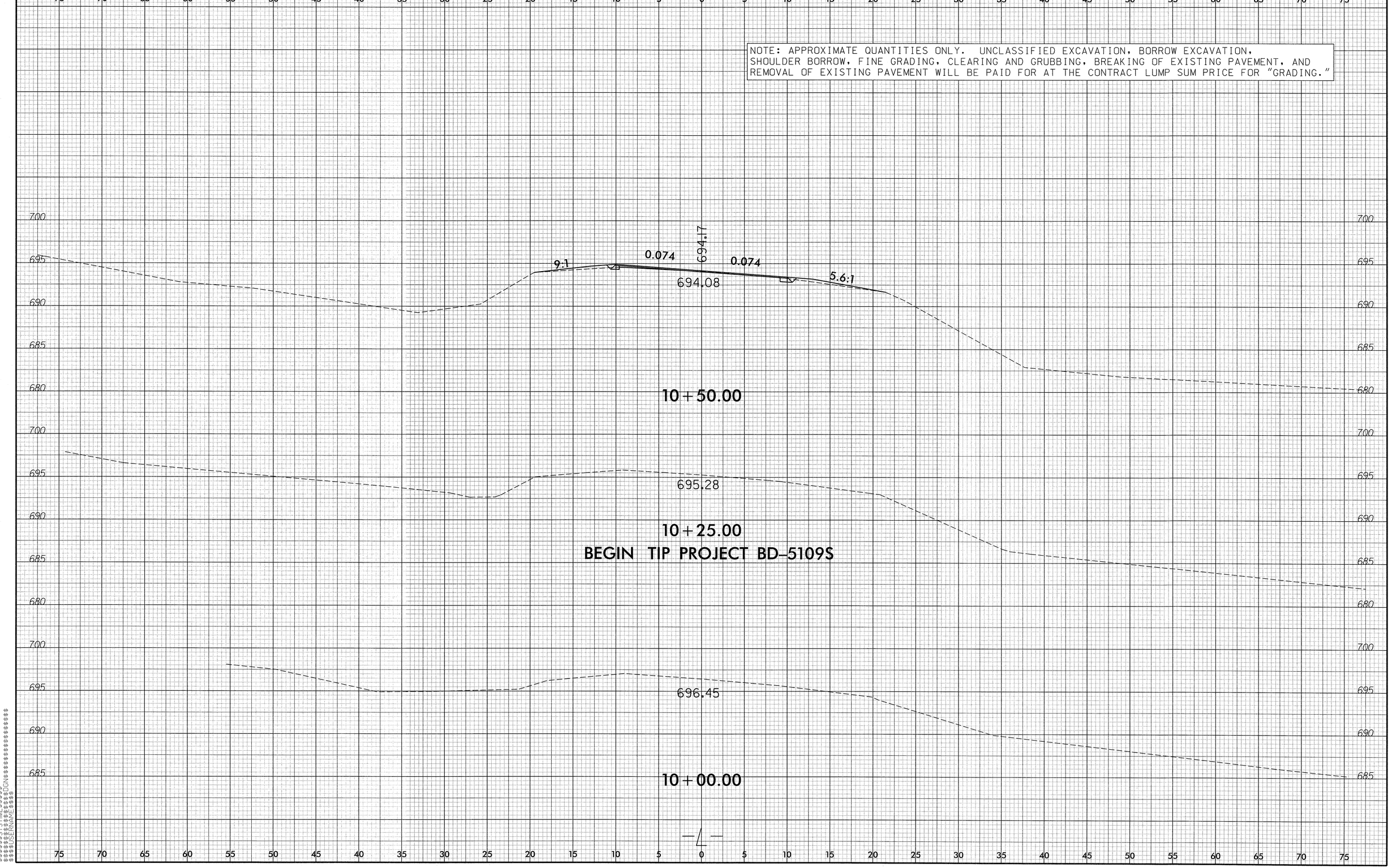

SYSTEM$$$

PROJ. REFERENCE NO.	SHEET NO.
BD-5109S	X-2

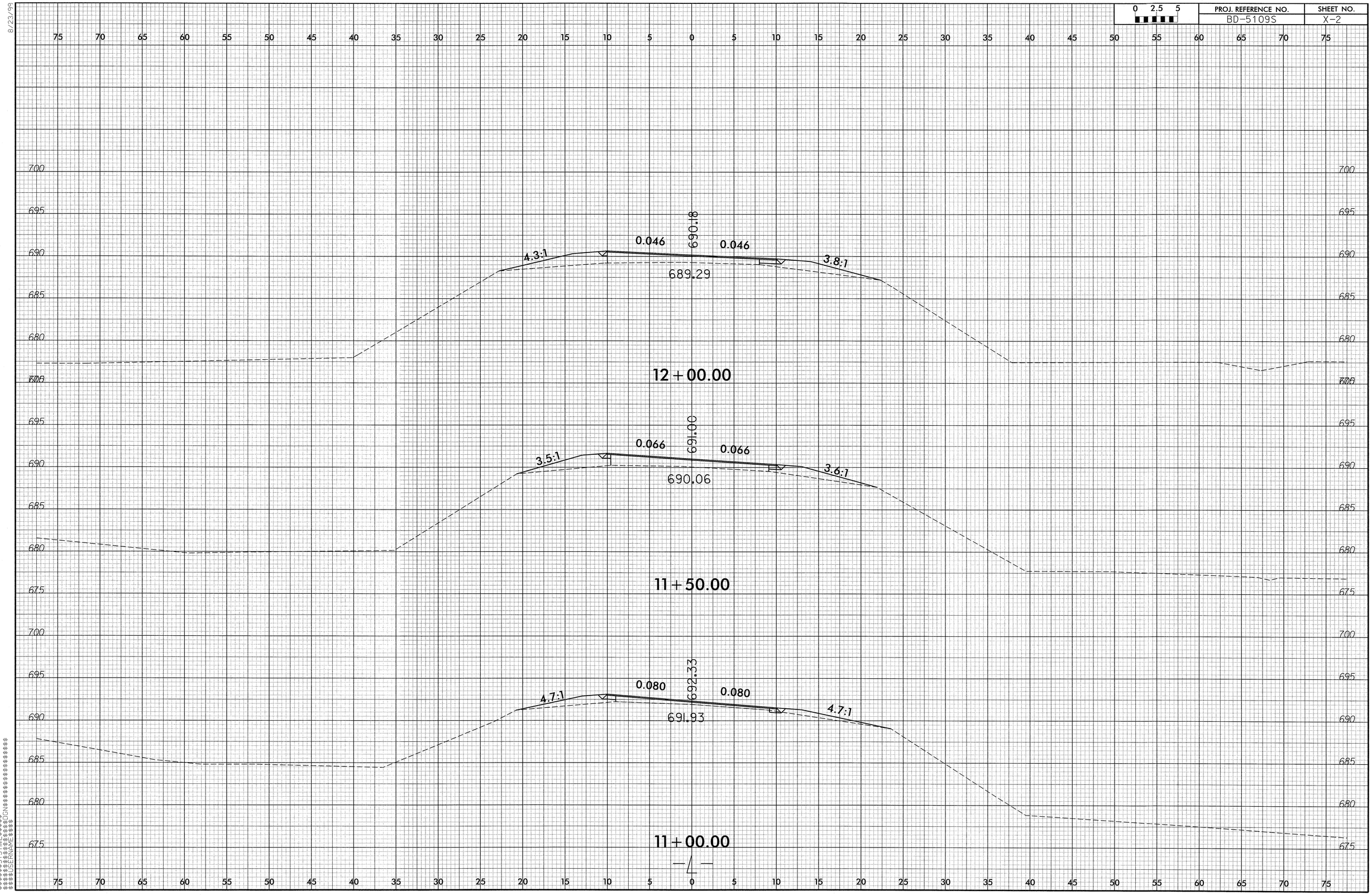

8/23/99

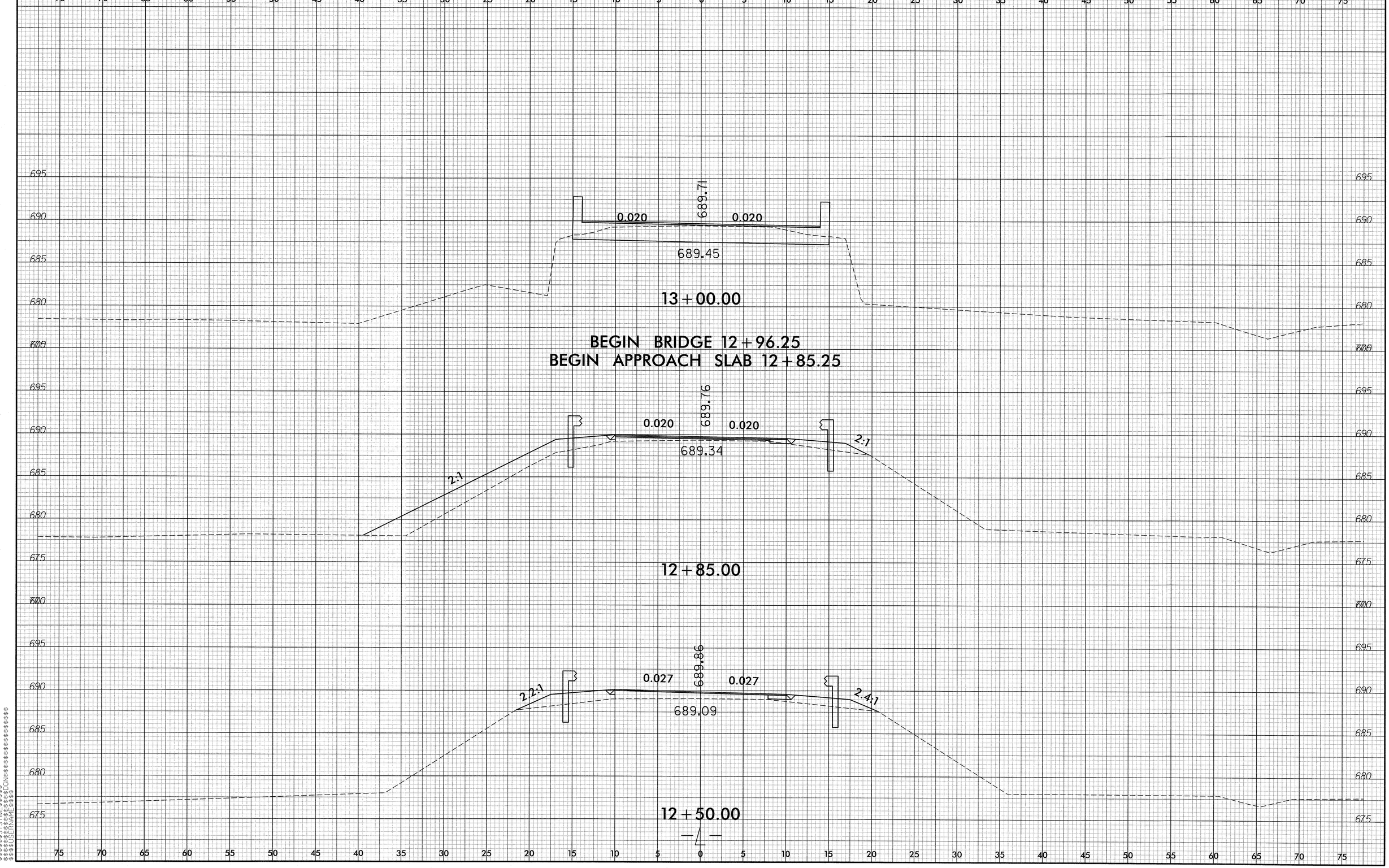

0 2.5 5
PROJ. REFERENCE NO.
BD-5109S
SHEET NO.
X-3
0.020
689.71
0.020
689.45
13+00.00
BEGIN BRIDGE 12+96.25
BEGIN APPROACH SLAB 12+85.25
0.020
689.76
0.020
2:1
689.34
2:1
12+85.00
0.027
689.86
0.027
2.2:1
2.4:1
689.09
12+50.00

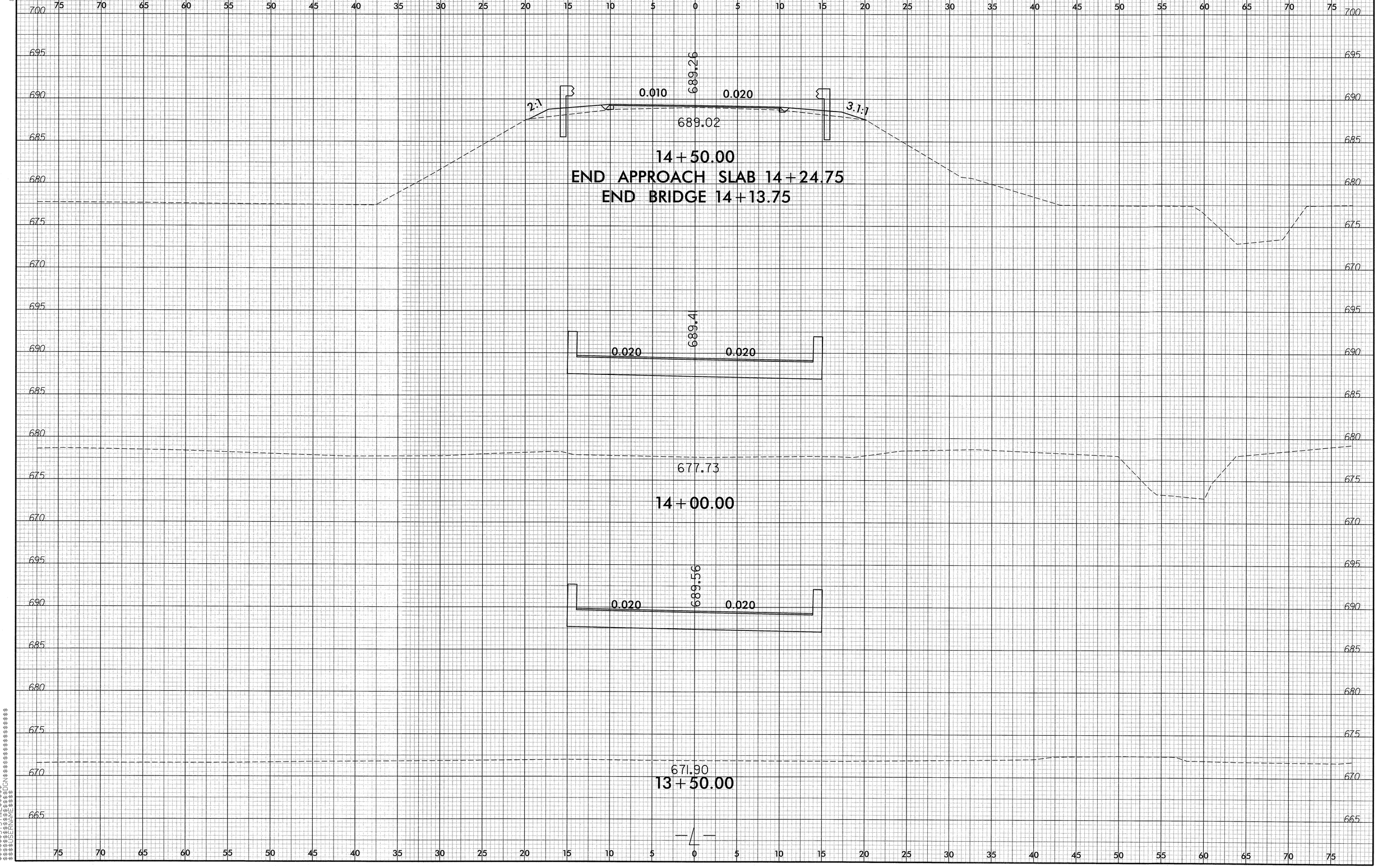

0 2.5 5
PROJ. REFERENCE NO.
BD-5109S
SHEET NO.
X-4
689.26
0.010
0.020
2:1
3.1:1
689.02
14+50.00
END APPROACH SLAB 14+24.75
END BRIDGE 14+13.75
689.41
0.020
0.020
677.73
14+00.00
689.56
0.020
0.020
671.90
13+50.00

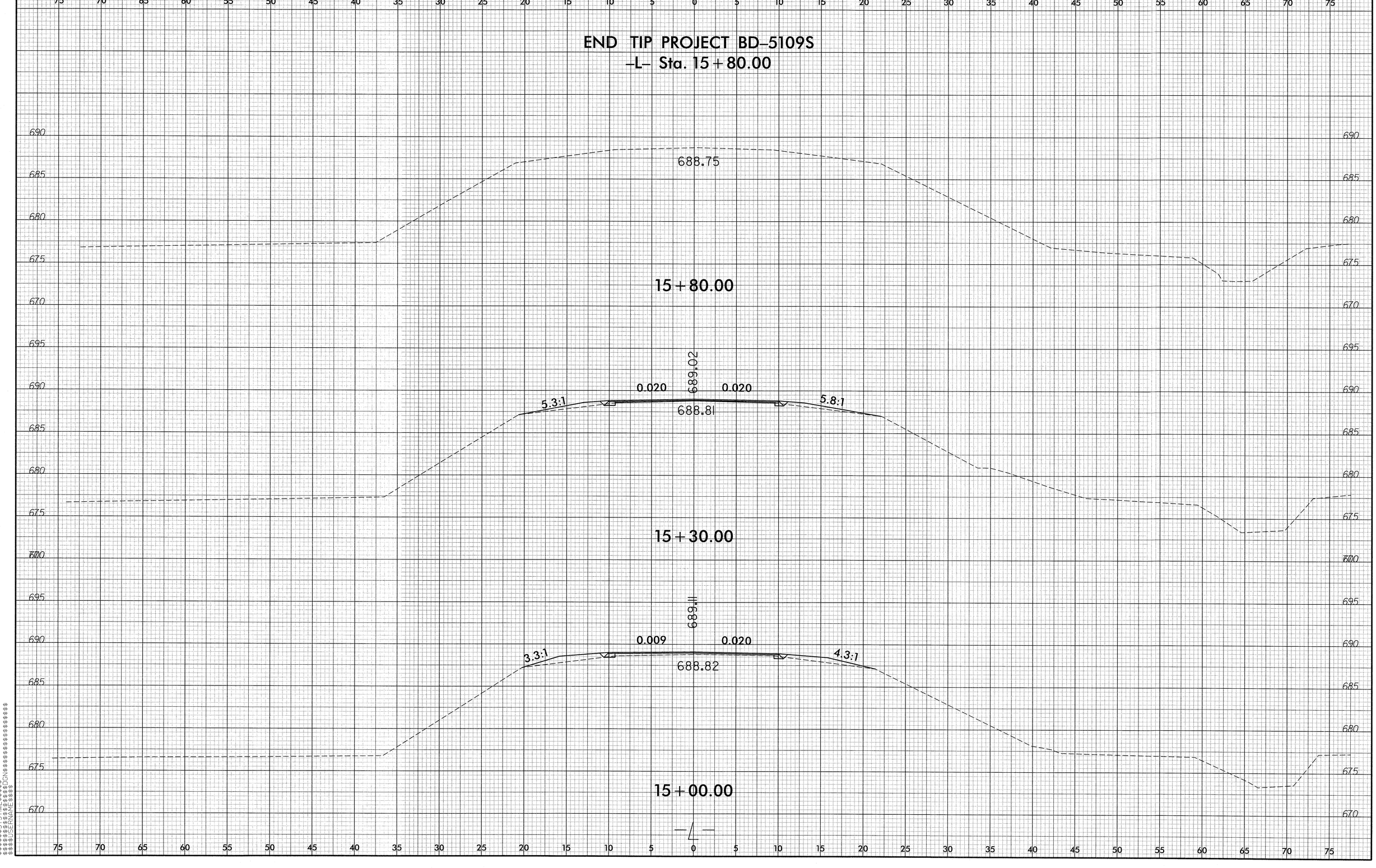

0 2.5 5
PROJ. REFERENCE NO.
BD-5109S
SHEET NO.
X-5
END TIP PROJECT BD-5109S
-L- Sta. 15+80.00
688.75
15+80.00
689.02
0.020
0.020
5.3:1
5.8:1
688.81
15+30.00
689.11
0.009
0.020
3.3:1
4.3:1
688.82
15+00.00
-L-

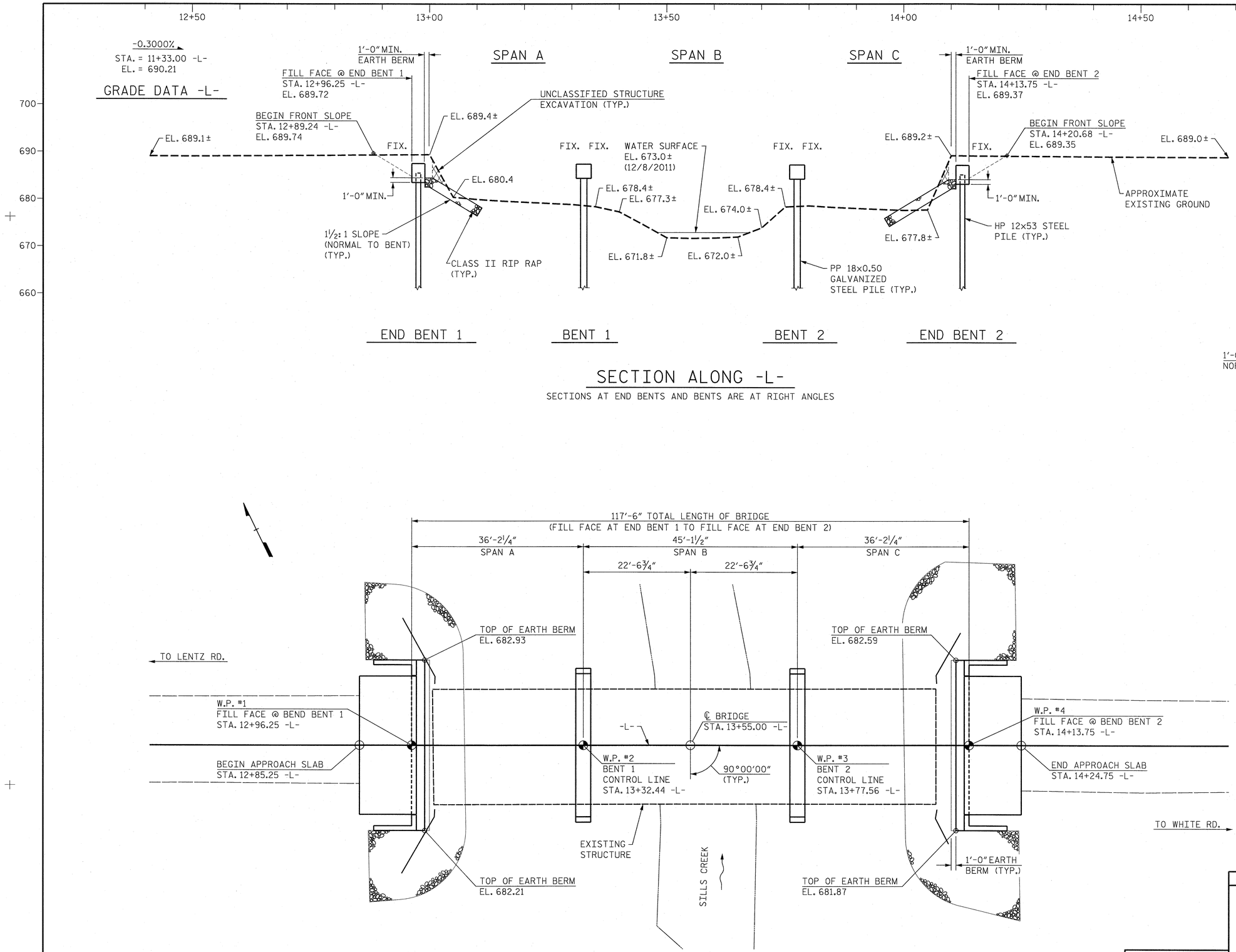

SECTION ALONG -L-

SECTIONS AT END BENTS AND BENTS ARE AT RIGHT ANGLES

PLAN

PILES NOT SHOWN FOR CLARITY

HYDRAULIC DATA

DESIGN DISCHARGE	3100 CFS
FREQUENCY OF DESIGN FLOOD	25 YRS.
DESIGN HIGH WATER ELEVATION	683.3
DRAINAGE AREA	18.0 SQ.MI.
BASE DISCHARGE (Q100)	4500 CFS
BASE HIGH WATER ELEVATION	684.61

OVERTOPPING FLOOD DATA

OVERTOPPING FLOOD DISCHARGE	8800 CFS
FREQUENCY OF OVERTOPPING FLOOD	>500 YRS.
OVERTOPPING FLOOD ELEVATION	688.90

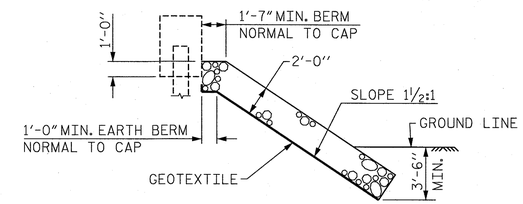

RIP RAP DETAIL

I HEREBY CERTIFY THESE PLANS ARE THE AS-BUILT PLANS

PROJECT NO. BD-5109S

ROWAN COUNTY

STATION: 13+55.00 -L-

SHEET 1 OF 2 REPLACES BRIDGE NO. 790016

STATE OF NORTH CAROLINA
DEPARTMENT OF TRANSPORTATION
RALEIGH

GENERAL DRAWING
FOR BRIDGE ON SR 1771 OVER SILLS CREEK BETWEEN SR 1772 AND SR 1737

NORTH CAROLINA PROFESSIONAL SEAL 032967 ENGINEER JASON B. DOUGHTY
2/7/14

PARSONS BRINCKERHOFF
434 FAYETTEVILLE STREET
SUITE 1500
RALEIGH, NC 27601
LICENSE NO. F-0165

REVISIONS						SHEET NO.
NO.	BY:	DATE:	NO.	BY:	DATE:	S-1
1			3			TOTAL SHEETS
2			4			20

DRAWN BY : K. WHITE DATE : JAN 2013
CHECKED BY : B. LOFLIN DATE : MAR 2013

BM #2: RR SPIKE SET IN BASE OF 18" LOCUST TREE, STA. 13+75.00, 156.0' LT., EL. 679.99'

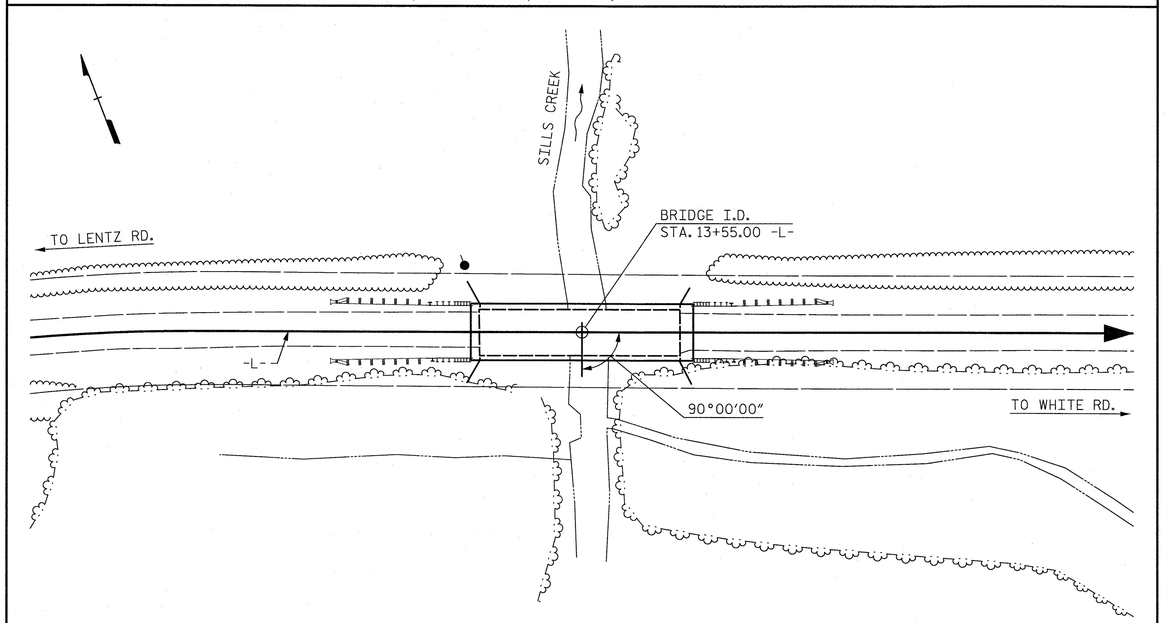

LOCATION SKETCH

NOTES:

ASSUMED LIVE LOAD = HL 93 OR ALTERNATE LOADING.

THIS BRIDGE HAS BEEN DESIGNED IN ACCORDANCE WITH THE AASHTO LRFD BRIDGE DESIGN SPECIFICATIONS.

FOR OTHER DESIGN DATA AND GENERAL NOTES, SEE SHEET SN.

FOR EROSION CONTROL MEASURES, SEE EROSION CONTROL PLANS.

THE EXISTING STRUCTURE CONSISTING OF TWO (2) 35'-3" SPANS AND ONE (1) 35'-0" SPAN, WITH AN OUT-TO-OUT DECK WIDTH OF 25' AND A TIMBER DECK COVERED WITH ASPHALT SUPPORTED BY STEEL GIRDERS, ON TIMBER CAPS AND TIMBER PILES WITH TIMBER BULKHEADS SHALL BE REMOVED. THE EXISTING BRIDGE IS PRESENTLY POSTED BELOW THE LEGAL LOAD LIMIT. SHOULD THE STRUCTURAL INTEGRITY OF THE BRIDGE FURTHER DETERIORATE, THIS LOAD LIMITATION MAY BE REDUCED AS FOUND NECESSARY DURING THE LIFE OF THE PROJECT.

REMOVAL OF THE EXISTING BRIDGE SHALL BE PERFORMED SO AS NOT TO ALLOW DEBRIS TO FALL INTO THE WATER. THE CONTRACTOR SHALL REMOVE THE BRIDGE AND SUBMIT PLANS FOR DEMOLITION IN ACCORDANCE WITH ARTICLE 402-2 OF THE STANDARD SPECIFICATIONS.

THE MATERIAL SHOWN IN THE CROSS-HATCHED AREA SHALL BE EXCAVATED FOR A DISTANCE OF 30 FT. EACH SIDE OF CENTERLINE ROADWAY AS DIRECTED BY THE ENGINEER. THIS WORK WILL BE PAID FOR AT THE CONTRACT LUMP SUM PRICE FOR UNCLASSIFIED STRUCTURE EXCAVATION. SEE SECTION 412 OF THE STANDARD SPECIFICATIONS.

THE SUBSTRUCTURE OF THE EXISTING BRIDGE INDICATED ON THE PLANS IS FROM THE BEST INFORMATION AVAILABLE. SINCE THIS INFORMATION IS SHOWN FOR THE CONVENIENCE OF THE CONTRACTOR, THE CONTRACTOR SHALL HAVE NO CLAIM WHATSOEVER AGAINST THE DEPARTMENT OF TRANSPORTATION FOR ANY DELAYS OR ADDITIONAL COST INCURRED BASED ON DIFFERENCES BETWEEN THE EXISTING BRIDGE SUBSTRUCTURE SHOWN ON THE PLANS AND THE ACTUAL CONDITIONS AT THE PROJECT SITE.

ASPHALT WEARING SURFACE IS INCLUDED IN ROADWAY QUANTITY ON ROADWAY PLANS.

THIS STRUCTURE HAS BEEN DESIGNED IN ACCORDANCE WITH HEC 18, "EVALUATING SCOUR AT BRIDGES".

THE CONTRACTOR SHALL PROVIDE INDEPENDENT ASSURANCE SAMPLES OF REINFORCING STEEL AS FOLLOWS: FOR PROJECTS REQUIRING UP TO 400 TONS OF REINFORCING STEEL, ONE 30 INCH SAMPLE OF EACH SIZE BAR USED, AND FOR PROJECTS REQUIRING OVER 400 TONS OF REINFORCING STEEL, TWO 30 INCH SAMPLES OF EACH SIZE BAR USED. THE BARS FROM WHICH THE SAMPLES ARE TAKEN MUST THEN BE SPLICED WITH REPLACEMENT BARS OF THE SIZE AND LENGTH OF THE SAMPLE, PLUS A MINIMUM LAP SPLICE OF THIRTY BAR DIAMETERS. PAYMENT FOR THE SAMPLES OF REINFORCING STEEL SHALL BE CONSIDERED INCIDENTAL TO VARIOUS PAY ITEMS.

INASMUCH AS THE PAINT SYSTEM ON THE EXISTING STRUCTURAL STEEL CONTAINS LEAD, THE CONTRACTOR'S ATTENTION IS DIRECTED TO ARTICLE 107-1 OF THE STANDARD SPECIFICATIONS. ANY COSTS RESULTING FROM COMPLIANCE WITH APPLICABLE STATE OR FEDERAL REGULATIONS PERTAINING TO HANDLING OF MATERIALS CONTAINING LEAD BASED PAINT SHALL BE INCLUDED IN THE BID PRICE FOR "REMOVAL OF EXISTING STRUCTURE AT STATION 13+55.00."

NO KNOWN UTILITY CONFLICTS.

FOR SUBMITTAL OF WORKING DRAWINGS, SEE SPECIAL PROVISIONS.

FOR FALSEWORK AND FORMWORK, SEE SPECIAL PROVISIONS.

FOR CRANE SAFETY, SEE SPECIAL PROVISIONS.

FOR GROUT FOR STRUCTURES, SEE SPECIAL PROVISIONS.

FOR PILES, SEE SECTION 450 OF THE STANDARD SPECIFICATIONS.

PILES AT END BENT NO. 1 AND 2 ARE DESIGNED FOR A FACTORED RESISTANCE OF 70 TONS PER PILE.

DRIVE PILES AT END BENT NO. 1 AND 2 TO A REQUIRED DRIVING RESISTANCE OF 120 TONS PER PILE.

PILES AT BENT NO. 1 AND 2 ARE DESIGNED FOR A FACTORED RESISTANCE OF 90 TONS PER PILE.

DRIVE PILES AT BENT NO. 1 AND 2 TO A REQUIRED DRIVING RESISTANCE OF 120 TONS PER PILE. THIS REQUIRED DRIVING RESISTANCE INCLUDES ADDITIONAL RESISTANCE FOR DOWNDRAG OR SCOUR.

INSTALL PILES AT BENT NO. 1 TO A TIP ELEVATION NO HIGHER THAN 651.0 FT.

INSTALL PILES AT BENT NO. 2 TO A TIP ELEVATION NO HIGHER THAN 648.0 FT.

THE SCOUR CRITICAL ELEVATIONS FOR BENT NO. 1 AND 2 ARE ELEVATIONS 658.0 AND 656.0 FT., RESPECTIVELY. SCOUR CRITICAL ELEVATIONS ARE USED TO MONITOR POSSIBLE SCOUR PROBLEMS DURING THE LIFE OF THE STRUCTURE.

TESTING PILES WITH THE PDA DURING DRIVING, RESTRIKING OR REDRIVING MAY BE REQUIRED. THE ENGINEER WILL DETERMINE THE NEED FOR PDA TESTING. FOR PDA TESTING, SEE SECTION 450 OF THE STANDARD SPECIFICATIONS AND FOR PILE DRIVING CRITERIA, SEE PILE DRIVING CRITERIA PROVISION.

TOTAL BILL OF MATERIAL

	REMOVAL OF EXISTING STRUCTURE AT STATION 13+55.00 -L-	PDA TESTING	UNCLASSIFIED STRUCTURE EXCAVATION AT STATION 13+55.00 -L-	CLASS A CONCRETE	BRIDGE APPROACH SLABS	REINFORCING STEEL	HP 12x53 STEEL PILES		PP 18x0.50 GALVANIZED STEEL PILES		PIPE PILE PLATES	VERTICAL CONCRETE BARRIER RAIL	RIP RAP CLASS II (2'-0" THICK)	GEOTEXTILE FOR DRAINAGE	ELASTOMERIC BEARINGS	3'-0" x 1'-9" PRESTRESSED CONCRETE CORED SLABS	
	LUMP SUM	EA.	LUMP SUM	CU. YDS.	LUMP SUM	LBS.	NO.	LIN. FT.	NO.	LIN. FT.	EA.	LIN. FT.	TONS	SQ. YDS.	LUMP SUM	NO.	LIN. FT.
SUPERSTRUCTURE	LUMP SUM				LUMP SUM							230.75			LUMP SUM	30	1150
END BENT NO. 1			LUMP SUM	20.0		2449	5	205					121	134			
BENT NO. 1				9.4		1968			7	355	7						
BENT NO. 2				9.4		1968			7	300	7						
END BENT NO. 2			LUMP SUM	20.0		2449	5	190					162	180			
TOTAL	LUMP SUM	1	LUMP SUM	58.8	LUMP SUM	8834	10	395	14	655	14	230.75	283	314	LUMP SUM	30	1150

PROJECT NO. BD-5109S

ROWAN COUNTY

STATION: 13+55.00 -L-

SHEET 2 OF 2

STATE OF NORTH CAROLINA
DEPARTMENT OF TRANSPORTATION
RALEIGH

GENERAL DRAWING
FOR BRIDGE ON SR 1771 OVER
SILLS CREEK BETWEEN
SR 1772 AND SR 1737

PARSONS BRINCKERHOFF
434 FAYETTEVILLE STREET
SUITE 1500
RALEIGH, NC 27601
LICENSE NO. F-0165

NORTH CAROLINA PROFESSIONAL SEAL 032967 ENGINEER JASON R. DOWDY
5/6/14

REVISIONS						SHEET NO.
NO.	BY:	DATE:	NO.	BY:	DATE:	S-2
1			3			TOTAL SHEETS
2			4			20

DRAWN BY : K. WHITE DATE : JAN 2013
CHECKED BY : B. LOFLIN DATE : MAR 2013

LOAD AND RESISTANCE FACTOR RATING (LRFD) SUMMARY FOR PRESTRESSED CONCRETE GIRDERS

LEVEL		VEHICLE	WEIGHT (W) (TONS)	CONTROLLING LOAD RATING	MINIMUM RATING FACTORS (RF)	TONS = W X RF	STRENGTH I LIMIT STATE											SERVICE III LIMIT STATE						COMMENT NUMBER
							LIVELOAD FACTORS	MOMENT					SHEAR					LIVELOAD FACTORS	MOMENT					
								DISTRIBUTION FACTORS (DF)	RATING FACTOR	SPAN	GIRDER LOCATION	DISTANCE FROM LEFT END OF SPAN (ft)	DISTRIBUTION FACTORS (DF)	RATING FACTOR	SPAN	GIRDER LOCATION	DISTANCE FROM LEFT END OF SPAN (ft)		DISTRIBUTION FACTORS (DF)	RATING FACTOR	SPAN	GIRDER LOCATION	DISTANCE FROM LEFT END OF SPAN (ft)	
DESIGN LOAD RATING		HL-93(Inv)	N/A	(1)	1.03	--	1.75	0.28	1.36	35'	EL	17	0.561	**1.03**	35'	EL	**1.7**	0.80	0.28	1.05	35'	EL	17	
		HL-93(Opr)	N/A	--	1.34	--	1.35	0.28	1.77	35'	EL	17	0.561	1.34	35'	EL	1.7	N/A	--	--	--	--	--	
		HS-20(Inv)	36.000	(2)	1.19	42.810	1.75	0.28	1.79	35'	EL	13.6	0.561	**1.19**	35'	EL	**1.7**	0.80	0.28	1.39	35'	EL	17	
		HS-20(Opr)	36.000	--	1.54	55.494	1.35	0.28	2.32	35'	EL	13.6	0.561	1.54	35'	EL	1.7	N/A	--	--	--	--	--	
LEGAL LOAD RATING	SV	SNSH	13.500	--	2.40	32.402	1.4	0.28	3.89	35'	EL	17	0.561	3.06	35'	EL	1.7	0.80	0.28	2.40	35'	EL	17	
		SNGARBS2	20.000	--	2.05	41.044	1.4	0.28	3.29	35'	EL	13.6	0.561	2.32	35'	EL	1.7	0.80	0.28	2.05	35'	EL	13.6	
		SNAGRIS2	22.000	--	2.05	45.174	1.4	0.28	3.26	35'	EL	13.6	0.561	2.21	35'	EL	1.7	0.80	0.28	2.05	35'	EL	13.6	
		SNCOTTS3	27.250	--	1.20	32.744	1.4	0.28	1.95	35'	EL	17	0.561	1.54	35'	EL	1.7	0.80	0.28	1.20	35'	EL	17	
		SNAGGRS4	34.925	--	1.11	38.816	1.4	0.28	1.8	35'	EL	17	0.561	1.38	35'	EL	1.7	0.80	0.28	1.11	35'	EL	17	
		SNS5A	35.550	--	1.08	38.354	1.4	0.28	1.75	35'	EL	17	0.561	1.46	35'	EL	1.7	0.80	0.28	1.08	35'	EL	17	
		SNS6A	39.950	--	1.04	41.601	1.4	0.28	1.69	35'	EL	17	0.561	1.37	35'	EL	1.7	0.80	0.28	1.04	35'	EL	17	
		SNS7B	42.000	(3)	1.00	41.734	1.4	0.28	1.61	35'	EL	17	0.561	1.4	35'	EL	1.7	0.80	0.28	**1.00**	35'	EL	**17**	
	TTST	TNAGRIT3	33.000	--	1.29	42.439	1.4	0.28	2.08	35'	EL	17	0.561	1.6	35'	EL	1.7	0.80	0.28	1.29	35'	EL	17	
		TNT4A	33.075	--	1.29	42.512	1.4	0.28	2.08	35'	EL	17	0.561	1.51	35'	EL	1.7	0.80	0.28	1.29	35'	EL	17	
		TNT6A	41.600	--	1.13	46.84	1.4	0.28	1.82	35'	EL	17	0.561	1.48	35'	EL	1.7	0.80	0.28	1.13	35'	EL	17	
		TNT7A	42.000	--	1.16	48.833	1.4	0.28	1.89	35'	EL	17	0.561	1.37	35'	EL	1.7	0.80	0.28	1.16	35'	EL	17	
		TNT7B	42.000	--	1.14	48.061	1.4	0.28	1.85	35'	EL	17	0.561	1.33	35'	EL	1.7	0.80	0.28	1.14	35'	EL	17	
		TNAGRIT4	43.000	--	1.16	49.810	1.4	0.28	1.86	35'	EL	13.6	0.561	1.28	35'	EL	1.7	0.80	0.28	1.16	35'	EL	17	
		TNAGT5A	45.000	--	1.07	48.071	1.4	0.28	1.73	35'	EL	17	0.561	1.35	35'	EL	1.7	0.80	0.28	1.07	35'	EL	17	
		TNAGT5B	45.000	--	1.03	46.373	1.4	0.28	1.67	35'	EL	17	0.561	1.21	35'	EL	1.7	0.80	0.28	1.03	35'	EL	17	

LOAD FACTORS:

	LIMIT STATE	γ_{DC}	γ_{DW}
DESIGN LOAD RATING FACTORS	STRENGTH I	1.25	1.50
	SERVICE III	1.00	1.00

NOTES:

MINIMUM RATING FACTORS ARE BASED ON THE STRENGTH I AND SERVICE III LIMIT STATES.

ALLOWABLE STRESSES FOR SERVICE III LIMIT STATE ARE AS REQUIRED FOR DESIGN.

COMMENTS:

1.
2.
3.
4.

(#) CONTROLLING LOAD RATING

(1) DESIGN LOAD RATING (HL-93)

(2) DESIGN LOAD RATING (HS-20)

(3) LEGAL LOAD RATING **

** SEE CHART FOR VEHICLE TYPE

GIRDER LOCATION

I - INTERIOR GIRDER
EL - EXTERIOR LEFT GIRDER
ER - EXTERIOR RIGHT GIRDER

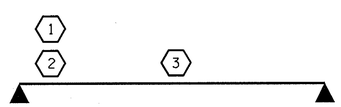

LRFR SUMMARY

FOR SPANS 'A' & 'C'

PROJECT NO. BD-5109S

ROWAN COUNTY

STATION: 13+55.00-L-

SHEET 1 OF 2

STATE OF NORTH CAROLINA
DEPARTMENT OF TRANSPORTATION
RALEIGH

STANDARD
LRFR SUMMARY FOR
35' CORED SLAB UNIT
90° SKEW
(NON-INTERSTATE TRAFFIC)

NORTH CAROLINA PROFESSIONAL SEAL 10730 ENGINEER D. ANDREW DAVENPORT

11-8-12

REVISIONS						SHEET NO.
NO.	BY:	DATE:	NO.	BY:	DATE:	S-3
1			3			TOTAL SHEETS
2			4			20

ASSEMBLED BY : D.A. DAVENPORT DATE : 07/30/12
CHECKED BY : G.W. DICKEY DATE : 08/01/12

DRAWN BY : CVC 6/10
CHECKED BY : DNS 6/10

08-NOV-2012 07:07
R:\Structures\Plans\BD5109S_SD_CS.dgn
adavenport

STD. NO. 21LRFR1_90S_35L

LOAD AND RESISTANCE FACTOR RATING (LRFD) SUMMARY FOR PRESTRESSED CONCRETE GIRDERS

LEVEL		VEHICLE	WEIGHT (W) (TONS)	CONTROLLING LOAD RATING	MINIMUM RATING FACTORS (RF)	TONS = W X RF	STRENGTH I LIMIT STATE											SERVICE III LIMIT STATE						COMMENT NUMBER
								MOMENT					SHEAR						MOMENT					
							LIVELOAD FACTORS	DISTRIBUTION FACTORS (DF)	RATING FACTOR	SPAN	GIRDER LOCATION	DISTANCE FROM LEFT END OF SPAN (ft)	DISTRIBUTION FACTORS (DF)	RATING FACTOR	SPAN	GIRDER LOCATION	DISTANCE FROM LEFT END OF SPAN (ft)	LIVELOAD FACTORS	DISTRIBUTION FACTORS (DF)	RATING FACTOR	SPAN	GIRDER LOCATION	DISTANCE FROM LEFT END OF SPAN (ft)	
DESIGN LOAD RATING		HL-93(Inv)	N/A	(1)	1.09	--	1.75	0.277	1.34	45'	EL	22	0.539	1.23	45'	EL	2.2	0.80	0.277	**1.09**	45'	EL	**22**	
		HL-93(Opr)	N/A	--	1.59	--	1.35	0.277	1.74	45'	EL	22	0.539	1.59	45'	EL	2.2	N/A	--	--	--	--	--	
		HS-20(Inv)	36.000	(2)	1.34	48.104	1.75	0.277	1.65	45'	EL	22	0.539	1.45	45'	EL	2.2	0.80	0.277	**1.34**	45'	EL	**22**	
		HS-20(Opr)	36.000	--	1.88	67.763	1.35	0.277	2.14	45'	EL	22	0.539	1.88	45'	EL	2.2	N/A	--	--	--	--	--	
LEGAL LOAD RATING	SV	SNSH	13.500	--	2.61	35.252	1.4	0.277	4.02	45'	EL	22	0.539	4.01	45'	EL	2.2	0.80	0.277	2.61	45'	EL	22	
		SNGARBS2	20.000	--	2.11	42.166	1.4	0.277	3.25	45'	EL	22	0.539	2.94	45'	EL	2.2	0.80	0.277	2.11	45'	EL	22	
		SNAGRIS2	22.000	--	2.07	45.466	1.4	0.277	3.15	45'	EL	17.6	0.539	2.77	45'	EL	2.2	0.80	0.277	2.07	45'	EL	22	
		SNCOTTS3	27.250	--	1.30	35.527	1.4	0.277	2.01	45'	EL	22	0.539	2.01	45'	EL	2.2	0.80	0.277	1.30	45'	EL	22	
		SNAGGRS4	34.925	--	1.15	40.181	1.4	0.277	1.77	45'	EL	22	0.539	1.74	45'	EL	2.2	0.80	0.277	1.15	45'	EL	22	
		SNS5A	35.550	--	1.12	39.841	1.4	0.277	1.73	45'	EL	22	0.539	1.79	45'	EL	2.2	0.80	0.277	1.12	45'	EL	22	
		SNS6A	39.950	--	1.06	42.175	1.4	0.277	1.63	45'	EL	22	0.539	1.67	45'	EL	2.2	0.80	0.277	1.06	45'	EL	22	
		SNS7B	42.000	(3)	1.01	42.268	1.4	0.277	1.55	45'	EL	22	0.539	1.68	45'	EL	2.2	0.80	0.277	**1.01**	45'	EL	**22**	
	TTST	TNAGRIT3	33.000	--	1.30	42.759	1.4	0.277	2	45'	EL	22	0.539	1.96	45'	EL	2.2	0.80	0.277	1.30	45'	EL	22	
		TNT4A	33.075	--	1.31	43.305	1.4	0.277	2.02	45'	EL	22	0.539	1.88	45'	EL	2.2	0.80	0.277	1.31	45'	EL	22	
		TNT6A	41.600	--	1.10	45.712	1.4	0.277	1.69	45'	EL	22	0.539	1.83	45'	EL	2.2	0.80	0.277	1.10	45'	EL	22	
		TNT7A	42.000	--	1.12	47.043	1.4	0.277	1.73	45'	EL	22	0.539	1.69	45'	EL	2.2	0.80	0.277	1.12	45'	EL	22	
		TNT7B	42.000	--	1.17	48.975	1.4	0.277	1.8	45'	EL	22	0.539	1.61	45'	EL	2.2	0.80	0.277	1.17	45'	EL	22	
		TNAGRIT4	43.000	--	1.11	47.757	1.4	0.277	1.71	45'	EL	22	0.539	1.55	45'	EL	2.2	0.80	0.277	1.11	45'	EL	22	
		TNAGT5A	45.000	--	1.03	46.505	1.4	0.277	1.59	45'	EL	22	0.539	1.59	45'	EL	2.2	0.80	0.277	1.03	45'	EL	22	
		TNAGT5B	45.000	--	1.01	45.408	1.4	0.277	1.56	45'	EL	22	0.539	1.47	45'	EL	2.2	0.80	0.277	1.01	45'	EL	22	

LOAD FACTORS:

DESIGN LOAD RATING FACTORS	LIMIT STATE	γ_{DC}	γ_{DW}
	STRENGTH I	1.25	1.50
	SERVICE III	1.00	1.00

NOTES:

MINIMUM RATING FACTORS ARE BASED ON THE STRENGTH I AND SERVICE III LIMIT STATES.

ALLOWABLE STRESSES FOR SERVICE III LIMIT STATE ARE AS REQUIRED FOR DESIGN.

COMMENTS:

1.
2.
3.
4.

(#) CONTROLLING LOAD RATING

(1) DESIGN LOAD RATING (HL-93)

(2) DESIGN LOAD RATING (HS-20)

(3) LEGAL LOAD RATING **

** SEE CHART FOR VEHICLE TYPE

GIRDER LOCATION

I - INTERIOR GIRDER
EL - EXTERIOR LEFT GIRDER
ER - EXTERIOR RIGHT GIRDER

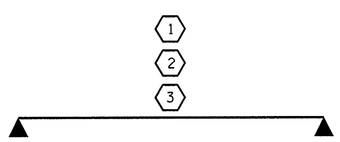

LRFR SUMMARY

FOR SPAN 'B'

PROJECT NO. BD-5109S

ROWAN COUNTY

STATION: 13+55.00-L-

SHEET 2 OF 2

STATE OF NORTH CAROLINA
DEPARTMENT OF TRANSPORTATION
RALEIGH

STANDARD

LRFR SUMMARY FOR 45' CORED SLAB UNIT 90° SKEW

(NON-INTERSTATE TRAFFIC)

NORTH CAROLINA PROFESSIONAL SEAL 10730 ENGINEER D. ANDREW DAVENPORT

11-8-12

REVISIONS						SHEET NO.
NO.	BY:	DATE:	NO.	BY:	DATE:	S-4
1			3			TOTAL SHEETS
2			4			20

ASSEMBLED BY : D.A. DAVENPORT DATE : 07/30/12
CHECKED BY : C.W. DICKEY DATE : 08/01/12

DRAWN BY : CVC 6/10
CHECKED BY : DNS 6/10

08-NOV-2012 07:07
R:\Structures\Plans\BD5109S_SD_CS.dgn
ddavenport

STD. NO. 21LRFR1_90S_45L

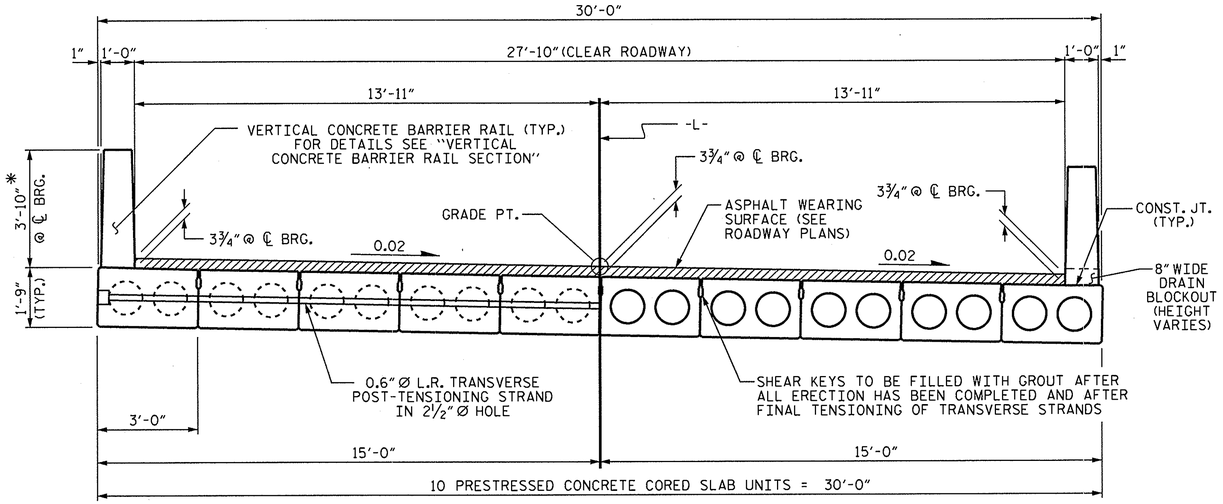

HALF SECTION
AT INTERMEDIATE DIAPHRAGMS

HALF SECTION
THROUGH VOIDS

TYPICAL SECTION

* - THE MAXIMUM BARRIER RAIL HEIGHT AND ASPHALT THICKNESS IS SHOWN. THE HEIGHT OF THE BARRIER RAIL AND ASPHALT THICKNESS VARIES WHILE THE TOP OF THE BARRIER RAIL FOLLOWS THE PROFILE OF THE GUTTERLINE. FOR RAIL HEIGHT DETAILS AND ASPHALT THICKNESS SEE THE "VERTICAL CONCRETE BARRIER RAIL SECTION" DETAIL.

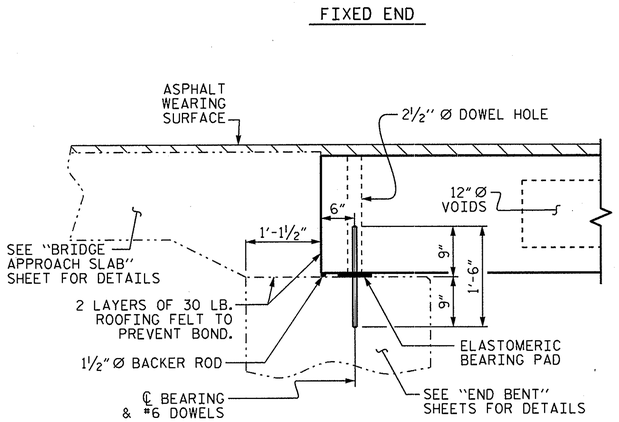

SECTION AT END BENT

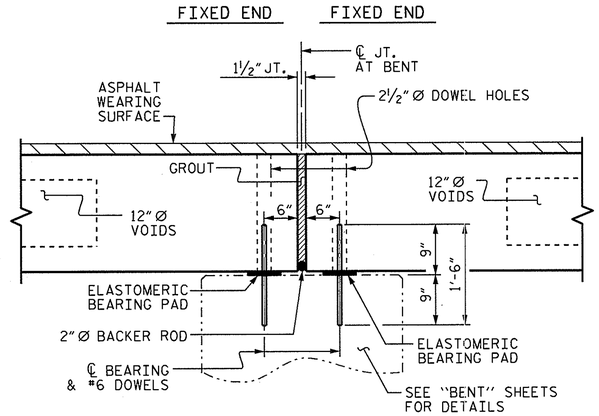

SECTION AT BENT

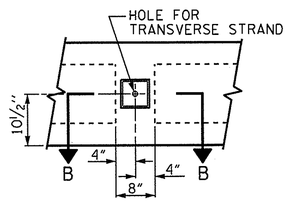

ELEVATION VIEW

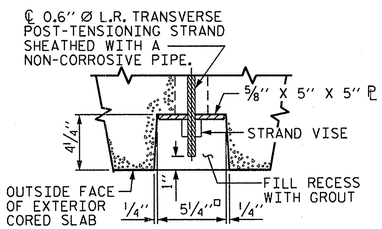

SECTION B-B

GROUTED RECESS AT END OF POST-TENSIONED STRAND OF CORED SLABS

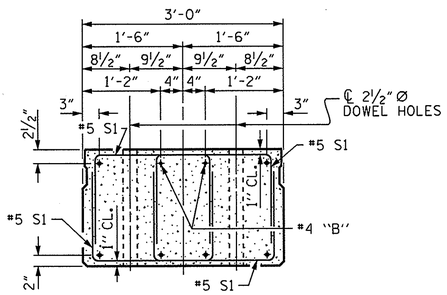

END ELEVATION

SHOWING PLACEMENT OF DOUBLE STIRRUPS AND LOCATION OF DOWEL HOLES. (STRAND LAYOUT NOT SHOWN.) INTERIOR SLAB UNIT SHOWN-EXTERIOR SLAB UNIT SIMILAR EXCEPT SHEAR KEY LOCATION.

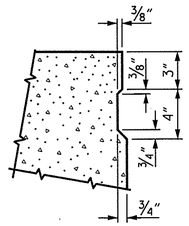

SHEAR KEY DETAIL

NOTE: OMIT SHEAR KEY ON OUTSIDE FACE OF EXTERIOR CORED SLABS.

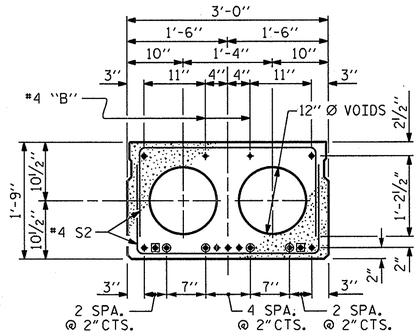

INTERIOR SLAB SECTION
(35' UNIT)
(9 STRANDS REQUIRED)

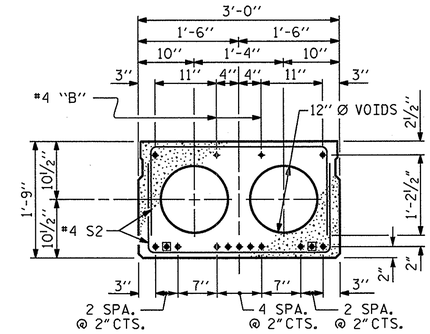

INTERIOR SLAB SECTION
(45' UNIT)
(13 STRANDS REQUIRED)

0.6" Ø LOW RELAXATION STRAND LAYOUT

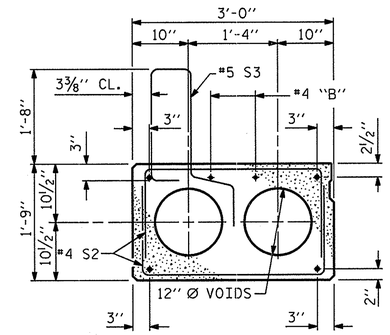

EXT. SLAB SECTION

(FOR PRESTRESSED STRAND LAYOUT, SEE INTERIOR SLAB SECTION.)

◉ BOND SHALL BE BROKEN ON THESE STRANDS FOR A DISTANCE OF 2'-0" FROM END OF CORED SLAB UNIT. SEE STANDARD SPECIFICATIONS, ARTICLE 1078-7.

◉ OPTIONAL FULL LENGTH DEBONDED STRANDS. THESE STRANDS ARE NOT REQUIRED. IF THE FABRICATOR CHOOSES TO INCLUDE THESE STRANDS IN THE CORED SLAB UNIT, THE STRANDS SHALL BE DEBONDED FOR THE FULL LENGTH OF THE UNIT AT NO ADDITIONAL COST. SEE STANDARD SPECIFICATIONS, ARTICLE 1078-7.

DEBONDING LEGEND

PROJECT NO. BD-5109S
ROWAN COUNTY
STATION: 13+55.00-L-

SHEET 1 OF 5

STATE OF NORTH CAROLINA
DEPARTMENT OF TRANSPORTATION
RALEIGH

STANDARD
3'-0" X 1'-9"
PRESTRESSED CONCRETE
CORED SLAB UNIT
90° SKEW

NORTH CAROLINA PROFESSIONAL SEAL 10730 ENGINEER D. ANDRE DAVENPORT, JR.
11/8/12

REVISIONS						SHEET NO.
NO.	BY:	DATE:	NO.	BY:	DATE:	S-5
1			3			TOTAL SHEETS
2			4			20

STD. NO. 21" PCS2_30_90S

ASSEMBLED BY : D.A. DAVENPORT	DATE : 07/27/12		
CHECKED BY : G.W. DICKEY	DATE : 08/01/12		
DRAWN BY : DGE 5/09	REV. 12/11	MAA/AAC	
CHECKED BY : BCH 6/09			

08-NOV-2012 14:40
R:\Structures\Plans\BD5109S_SD_CS.dgn
ddavenport

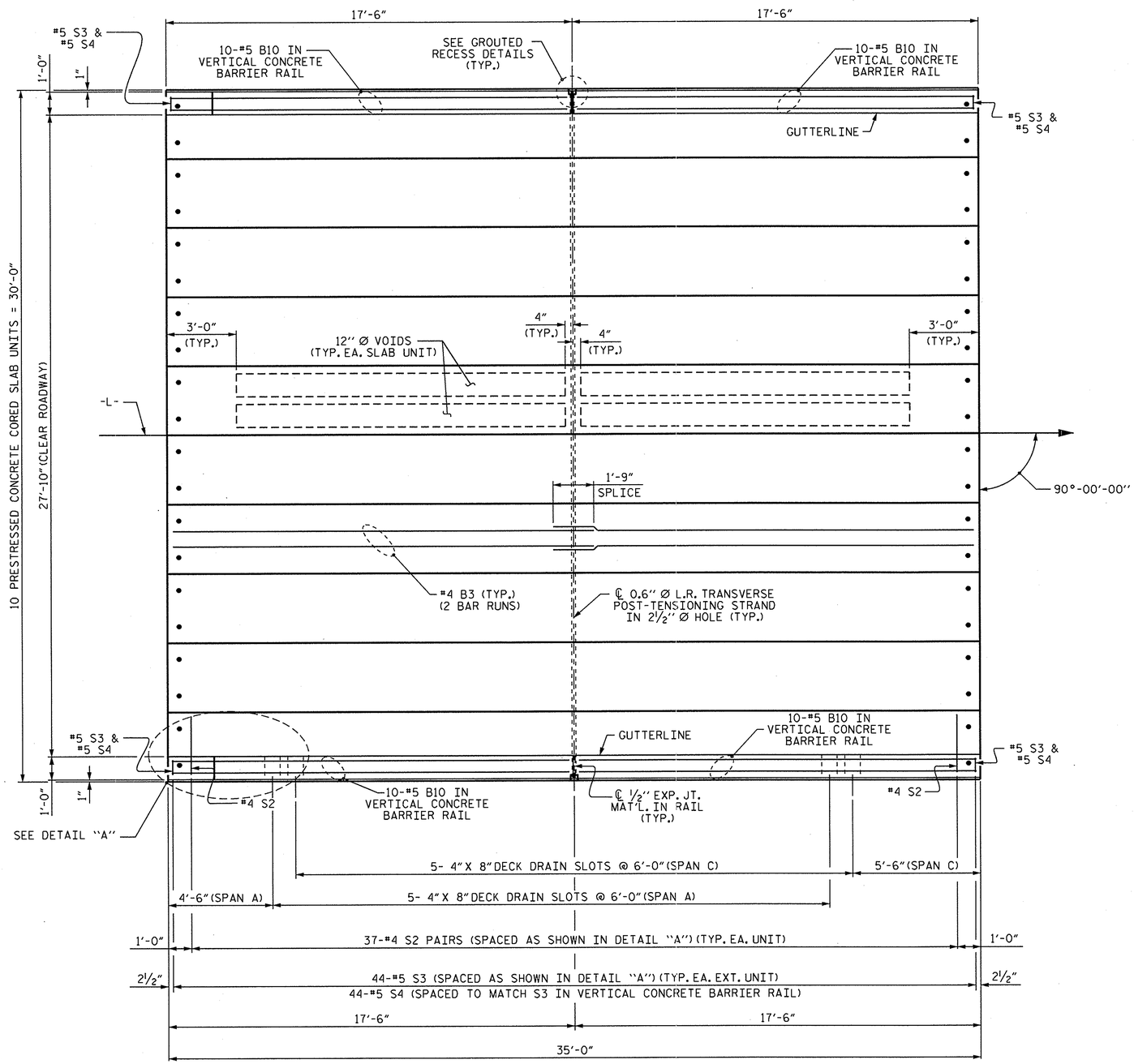

PLAN OF UNIT

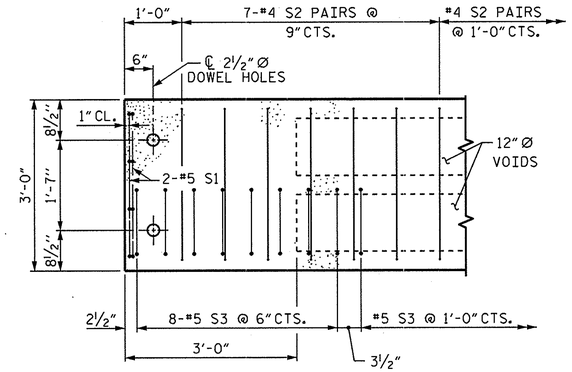

DETAIL "A"

NOTE: EXTERIOR UNIT SHOWN - INTERIOR UNIT SIMILAR EXCEPT OMIT #5 S3 BARS.

PROJECT NO. BD-5109S

ROWAN COUNTY

STATION: 13+55.00-L-

SHEET 2 OF 5

STATE OF NORTH CAROLINA
DEPARTMENT OF TRANSPORTATION
RALEIGH

PLAN OF 35' UNIT 27'-10" CLEAR ROADWAY 90° SKEW

NORTH CAROLINA PROFESSIONAL SEAL 10730 ENGINEER C. ANDRE DAVENPORT, JR.
11/6/12

REVISIONS						SHEET NO.
NO.	BY:	DATE:	NO.	BY:	DATE:	S-6
1			3			TOTAL SHEETS
2			4			20

ASSEMBLED BY : D.A. DAVENPORT	DATE : 07/27/12	
CHECKED BY : G.W. DICKEY	DATE : 08/01/12	
DRAWN BY : DGE 3/09	REV. 12/5/11	MAA/AAC
CHECKED BY : BCH 3/09		

08-NOV-2012 14:41
R:\Structures\Plans\BD5109S_S0_CS.dgn
cdavenport

STD. NO. 21" PCS_30_90S_35L

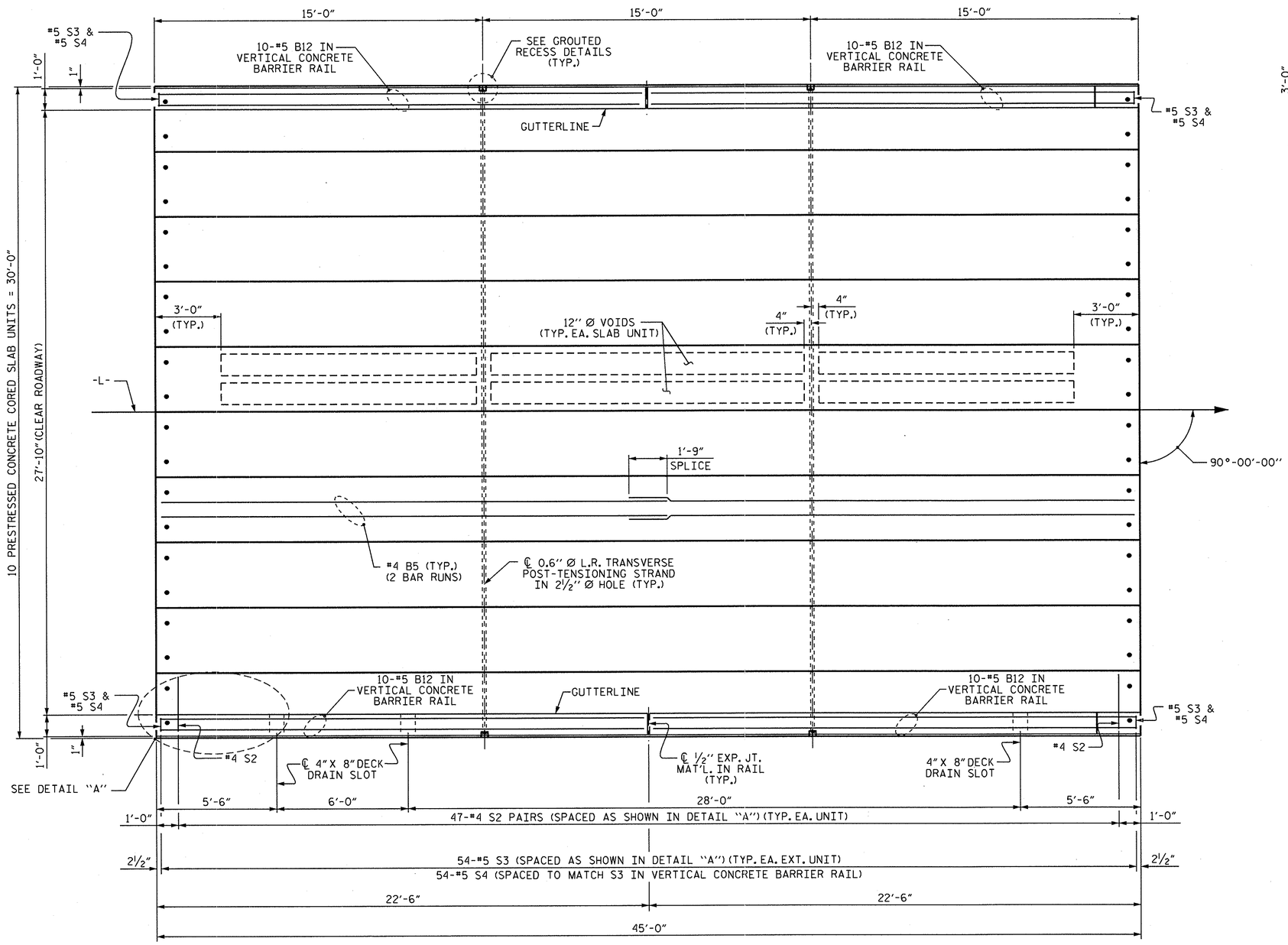

PLAN OF UNIT

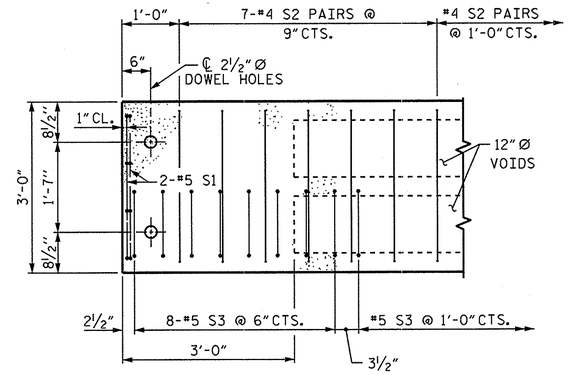

DETAIL "A"

NOTE: EXTERIOR UNIT SHOWN - INTERIOR UNIT SIMILAR EXCEPT OMIT #5 S3 BARS.

PROJECT NO. BD-5109S

ROWAN COUNTY

STATION: 13+55.00-L-

SHEET 3 OF 5

STATE OF NORTH CAROLINA
DEPARTMENT OF TRANSPORTATION
RALEIGH

PLAN OF 45' UNIT 27'-10" CLEAR ROADWAY 90° SKEW

NORTH CAROLINA PROFESSIONAL SEAL 10730 ENGINEER D. ANDRE DAVENPORT
11/8/12

REVISIONS						SHEET NO.
NO.	BY:	DATE:	NO.	BY:	DATE:	S-7
1			3			TOTAL SHEETS
2			4			20

ASSEMBLED BY : D.A. DAVENPORT DATE : 07/27/12
CHECKED BY : G.W. DICKEY DATE : 08/01/12
DRAWN BY : DGE 3/09
CHECKED BY : BCH 3/09
REV. 12/5/11 MAA/AAC

08-NOV-2012 14:41
R:\Structures\Plans\BD5109S_SD_CS.dgn
ddavenport

STD. NO. 21" PCS_30_90S_45L

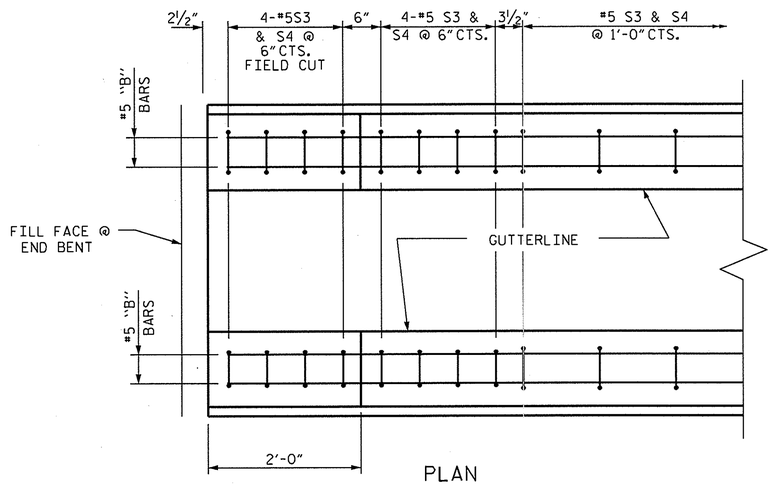

PLAN

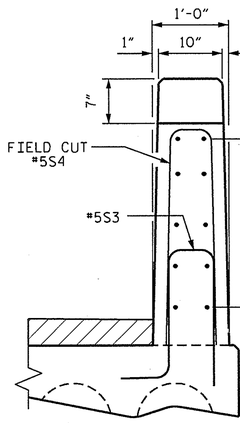

END VIEW

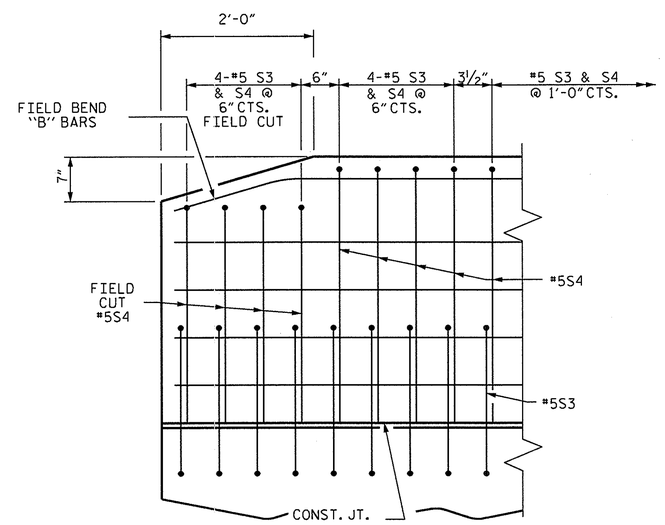

SIDE VIEW

END OF VERTICAL CONCRETE BARRIER RAIL DETAILS

BAR TYPES

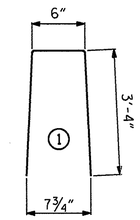

ALL BAR DIMENSIONS ARE OUT TO OUT

BILL OF MATERIAL FOR VERTICAL CONCRETE BARRIER RAIL

BAR	BARS PER PAIR OF EXTERIOR UNITS	TOTAL NO.	SIZE	TYPE	LENGTH	WEIGHT
	35' UNIT					
*B10	40	80	#5	STR	17'-1"	1426
* S4	88	176	#5	2	7'-2"	1316
* EPOXY COATED REINFORCING STEEL				LBS.		2742
CLASS AA CONCRETE				CU.YDS.		18.4
TOTAL VERTICAL CONCRETE BARRIER RAIL				LN. FT.		140.50

BILL OF MATERIAL FOR VERTICAL CONCRETE BARRIER RAIL

BAR	BARS PER PAIR OF EXTERIOR UNITS	TOTAL NO.	SIZE	TYPE	LENGTH	WEIGHT
	45' UNIT					
*B12	40	40	#5	STR	22'-1"	921
* S4	108	108	#5	2	7'-2"	807
* EPOXY COATED REINFORCING STEEL				LBS.		1728
CLASS AA CONCRETE				CU.YDS.		11.8
TOTAL VERTICAL CONCRETE BARRIER RAIL				LN. FT.		90.25

PROJECT NO. BD-5109S

ROWAN COUNTY

STATION: 13+55.00-L-

SHEET 4 OF 5

STATE OF NORTH CAROLINA
DEPARTMENT OF TRANSPORTATION
RALEIGH

STANDARD
3'-0" X 1'-9"
PRESTRESSED CONCRETE
CORED SLAB UNIT

NORTH CAROLINA PROFESSIONAL SEAL 10730 ENGINEER D. ANDREW DAVENPORT, JR.
11/8/12

REVISIONS						SHEET NO.
NO.	BY:	DATE:	NO.	BY:	DATE:	S-8
1			3			TOTAL SHEETS
2			4			20

ASSEMBLED BY : D.A. DAVENPORT DATE : 11/8/12
CHECKED BY : G.W. DICKEY DATE : 11/8/12

DRAWN BY : MAA 6/10
CHECKED BY : MKT 7/10

REV. 12/11 MAA/AAC

08-NOV-2012 14:42
R:\Structures\Plans\BD5109S_SD_CS.dgn
ddavenport

STD. NO. 24PCS3_30_90S

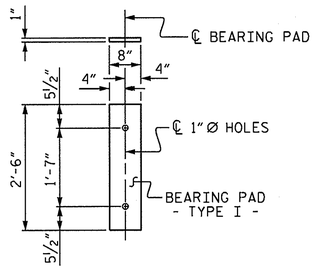

FIXED END
(TYPE I - 60 REQ'D)

ELASTOMERIC BEARING DETAILS

ELASTOMER IN ALL BEARINGS SHALL BE 50 DUROMETER HARDNESS.

GUTTERLINE ASPHALT THICKNESS & RAIL HEIGHT

27'-10" CLEAR ROADWAY	ASPHALT OVERLAY THICKNESS	RAIL HEIGHT
	@ MID-SPAN	@ MID-SPAN
	SUPERED SECTION	
35' UNITS	3⅜"	3'-9⅝"
45' UNITS	2⅝"	3'-8⅞"

CORED SLABS REQUIRED

	NUMBER	LENGTH	TOTAL LENGTH
35' UNIT			
EXTERIOR C.S.	4	35'-0"	140'-0"
INTERIOR C.S.	16	35'-0"	560'-0"
TOTAL	20	-	700'-0"

CORED SLABS REQUIRED

	NUMBER	LENGTH	TOTAL LENGTH
45' UNIT			
EXTERIOR C.S.	2	45'-0"	90'-0"
INTERIOR C.S.	8	45'-0"	360'-0"
TOTAL	10	-	450'-0"

GRADE 270 STRANDS

	0.6" Ø L.R.
AREA (SQUARE INCHES)	0.217
ULTIMATE STRENGTH (LBS. PER STRAND)	58,600
APPLIED PRESTRESS (LBS. PER STRAND)	43,950

BAR TYPES

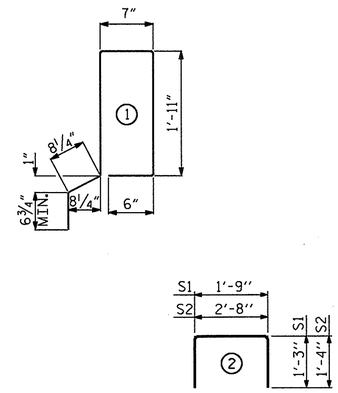

ALL BAR DIMENSIONS ARE OUT TO OUT

BILL OF MATERIAL FOR ONE 35' CORED SLAB UNIT

BAR	NUMBER	SIZE	TYPE	EXTERIOR UNIT LENGTH	EXTERIOR UNIT WEIGHT	INTERIOR UNIT LENGTH	INTERIOR UNIT WEIGHT
B3	4	#4	STR	18'-3"	49	18'-3"	49
S1	8	#5	2	4'-3"	35	4'-3"	35
S2	74	#4	2	5'-4"	264	5'-4"	264
* S3	44	#5	1	6'-2"	283		
REINFORCING STEEL			LBS.		348		348
* EPOXY COATED REINFORCING STEEL			LBS.		283		
5000 P.S.I. CONCRETE			CU. YDS.		5.1		5.1
0.6" Ø L.R. STRANDS			No.		9		9

BILL OF MATERIAL FOR ONE 45' CORED SLAB UNIT

BAR	NUMBER	SIZE	TYPE	EXTERIOR UNIT LENGTH	EXTERIOR UNIT WEIGHT	INTERIOR UNIT LENGTH	INTERIOR UNIT WEIGHT
B5	4	#4	STR	23'-3"	62	23'-3"	62
S1	8	#5	2	4'-3"	35	4'-3"	35
S2	94	#4	2	5'-4"	335	5'-4"	335
* S3	54	#5	1	6'-2"	347		
REINFORCING STEEL			LBS.		432		432
* EPOXY COATED REINFORCING STEEL			LBS.		347		
6500 P.S.I. CONCRETE			CU. YDS.		6.5		6.5
0.6" Ø L.R. STRANDS			No.		13		13

DEAD LOAD DEFLECTION AND CAMBER

	3'-0" x 1'-9"
35' CORED SLAB UNIT	0.6" Ø L.R. STRAND
CAMBER (SLAB ALONE IN PLACE)	½" ↑
DEFLECTION DUE TO SUPERIMPOSED DEAD LOAD**	⅛" ↓
FINAL CAMBER	⅜" ↑

** INCLUDES FUTURE WEARING SURFACE

DEAD LOAD DEFLECTION AND CAMBER

	3'-0" x 1'-9"
45' CORED SLAB UNIT	0.6" Ø L.R. STRAND
CAMBER (SLAB ALONE IN PLACE)	1¼' ↑
DEFLECTION DUE TO SUPERIMPOSED DEAD LOAD**	⅛" ↓
FINAL CAMBER	1⅛" ↑

** INCLUDES FUTURE WEARING SURFACE

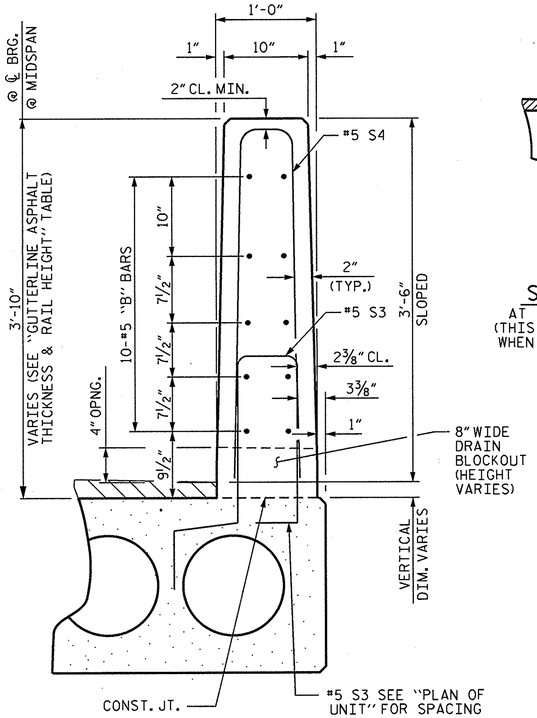

VERTICAL CONCRETE BARRIER RAIL SECTION

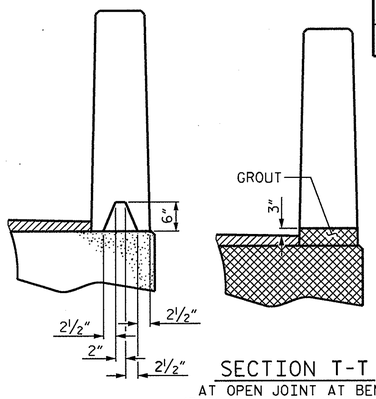

SECTION S-S
AT DAM IN OPEN JOINT
(THIS IS TO BE USED ONLY WHEN SLIP FORM IS USED)

SECTION T-T
AT OPEN JOINT AT BENT
(THIS IS TO BE USED WHERE FOAM JOINT IS NOT USED)

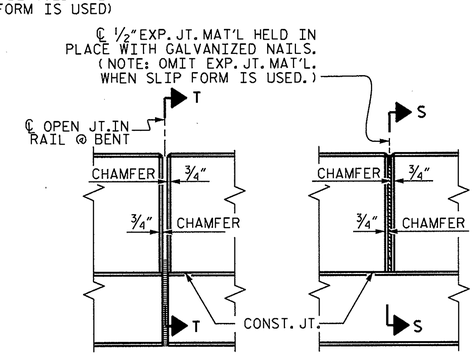

ELEVATION AT EXPANSION JOINTS

NOTES

ALL PRESTRESSING STRANDS SHALL BE 7-WIRE LOW RELAXATION GRADE 270 STRANDS AND SHALL CONFORM TO AASHTO M203 EXCEPT FOR SAMPLING REQUIREMENTS WHICH SHALL BE IN ACCORDANCE WITH THE STANDARD SPECIFICATIONS.

ALL REINFORCING STEEL CAST WITH THE CORED SLAB SECTIONS SHALL BE GRADE 60 AND SHALL BE INCLUDED IN THE UNIT PRICE BID FOR PRESTRESSED CONCRETE CORED SLABS.

RECESSES FOR TRANSVERSE STRANDS SHALL BE GROUTED AFTER THE TENSIONING OF THE STRANDS.

THE 2½" Ø DOWEL HOLES AT FIXED ENDS OF SLAB SECTIONS SHALL BE FILLED WITH NON-SHRINK GROUT.

THE BACKER RODS SHALL CONFORM TO THE REQUIREMENTS OF TYPE M BOND BREAKER. SEE SECTION 1028 OF THE STANDARD SPECIFICATIONS.

WHEN CORED SLABS ARE CAST, AN INTERNAL HOLD-DOWN SYSTEM SHALL BE EMPLOYED TO PREVENT VOIDS FROM RISING OR MOVING SIDEWAYS. AT LEAST SIX WEEKS PRIOR TO CASTING CORED SLABS, THE CONTRACTOR SHALL SUBMIT TO THE ENGINEER FOR REVIEW AND COMMENT, DETAILED DRAWINGS OF THE PROPOSED HOLD-DOWN SYSTEM. IN ADDITION TO STRUCTURAL DETAILS, LOCATION AND SPACING OF THE HOLD-DOWNS SHALL BE INDICATED.

ALL REINFORCING STEEL IN THE VERTICAL CONCRETE BARRIER RAIL SHALL BE EPOXY COATED.

PRESTRESSING STRANDS SHALL BE CUT FLUSH WITH THE CORED SLAB UNIT ENDS.

APPLY EPOXY PROTECTIVE COATING TO CORED SLAB UNIT ENDS.

GROOVED CONTRACTION JOINTS, ½" IN DEPTH, SHALL BE TOOLED IN ALL EXPOSED FACES OF THE BARRIER RAIL AND IN ACCORDANCE WITH ARTICLE 825-10(B) OF THE STANDARD SPECIFICATIONS. A CONTRACTION JOINT SHALL BE LOCATED AT EACH THIRD POINT BETWEEN BARRIER RAIL EXPANSION JOINTS. ONLY ONE CONTRACTION JOINT IS REQUIRED AT MIDPOINT OF BARRIER RAIL SEGMENTS LESS THAN 20 FEET IN LENGTH AND NO CONTRACTION JOINTS ARE REQUIRED FOR THOSE SEGMENTS LESS THAN 10 FEET IN LENGTH.

TRANSVERSE POST TENSIONING OF THE CORED SLAB UNITS SHALL BE DONE IN ACCORDANCE WITH THE STANDARD SPECIFICATIONS.

THE TRANSFER OF LOAD FROM THE ANCHORAGES TO THE CORED SLAB UNIT SHALL BE DONE WHEN THE CONCRETE HAS REACHED A COMPRESSIVE STRENGTH OF NOT LESS THAN THE REQUIRED STRENGTH SHOWN IN THE "CONCRETE RELEASE STRENGTH" TABLE.

FOR GROUT FOR STRUCTURES, SEE SPECIAL PROVISIONS.

THE DRAIN OPENING AT THE GUTTERLINE SHALL BE 4" X 8". THE HEIGHT OF THE BLOCKOUT IN THE VERTICAL CONCRETE BARRIER RAIL SHALL EXTEND FROM THE TOP OF THE CORED SLAB UNIT TO THE TOP OF THE DRAIN OPENING.

APPLY EPOXY PROTECTIVE COATING TO EXTERIOR FACE OF THE EXTERIOR CORED SLAB UNITS THAT REQUIRE DRAINS IN THE BARRIER RAIL.

CONCRETE RELEASE STRENGTH

UNIT	PSI
35' UNITS	4000
45' UNITS	4000

PROJECT NO. BD-5109S
ROWAN COUNTY
STATION: 13+55.00-L-

SHEET 5 OF 5

STATE OF NORTH CAROLINA
DEPARTMENT OF TRANSPORTATION
RALEIGH

STANDARD
3'-0" X 1'-9"
PRESTRESSED CONCRETE
CORED SLAB UNIT
90° SKEW

NORTH CAROLINA PROFESSIONAL SEAL 10730 ENGINEER D. ANDREW DAVENPORT, JR.
11/8/12

REVISIONS						SHEET NO.
NO.	BY:	DATE:	NO.	BY:	DATE:	S-9
1			3			TOTAL SHEETS
2			4			20

ASSEMBLED BY : D.A. DAVENPORT DATE : 07/30/12
CHECKED BY : G.W. DICKEY DATE : 08/01/12
DRAWN BY : DGE 5/09
CHECKED BY : BCH 6/09
REV. 12/11 MAA/AAC

08-NOV-2012 14:42
R:\Structures\Plans\BD5109S_SD_CS.dgn
adavenport

STD. NO. 21" PCS3_30_90S

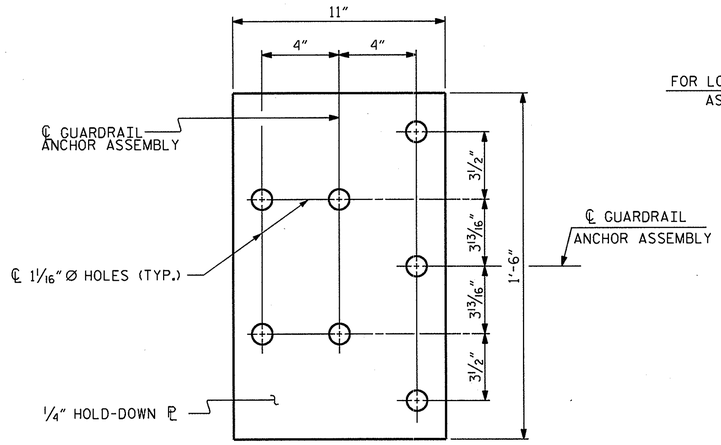

PLAN

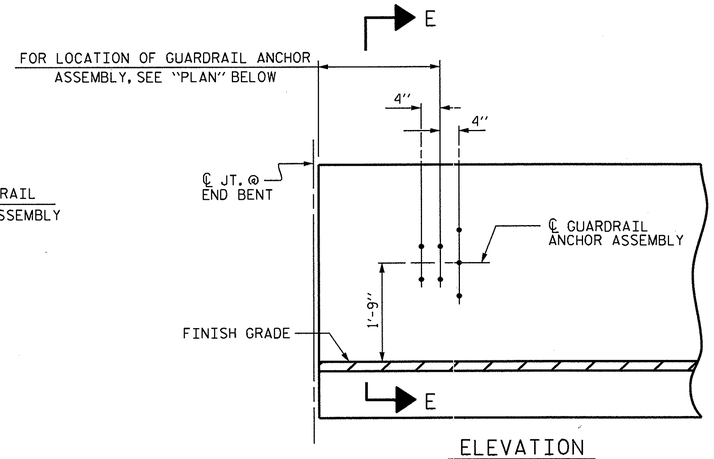

ELEVATION

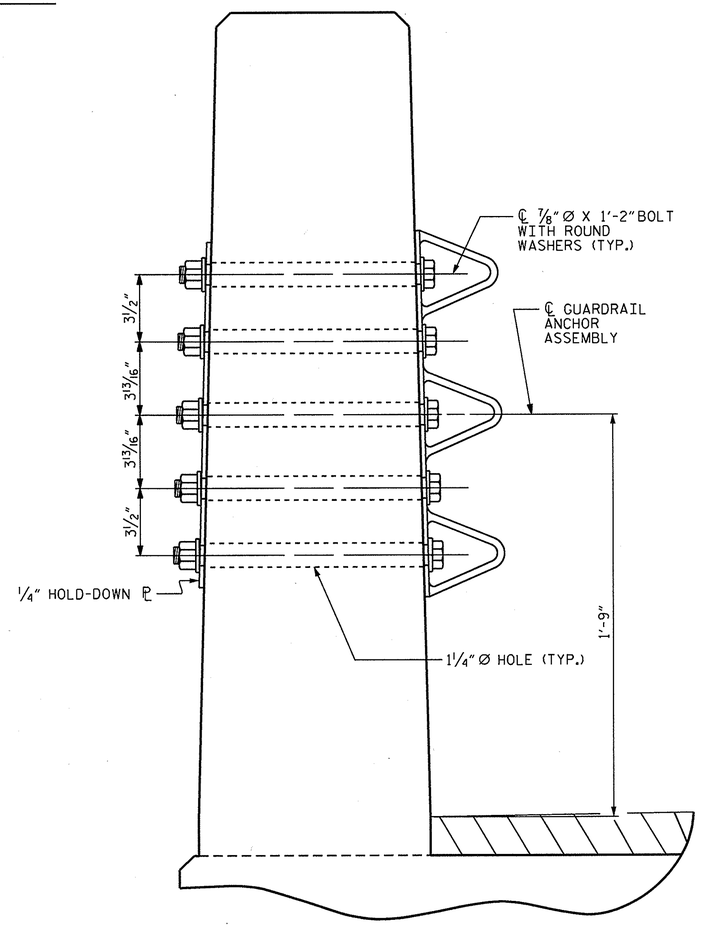

SECTION E-E

GUARDRAIL ANCHOR ASSEMBLY DETAILS

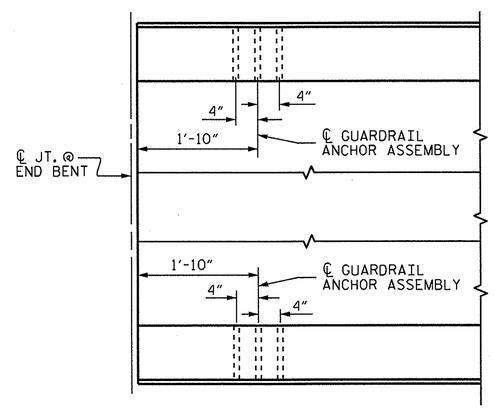

PLAN

LOCATION OF ANCHORS FOR GUARDRAIL

END BENT #1 SHOWN, END BENT #2 SIMILAR.

NOTES

THE GUARDRAIL ANCHOR ASSEMBLY SHALL CONSIST OF A 1/4" HOLD DOWN PLATE AND 7 - 7/8" Ø BOLTS WITH NUTS AND WASHERS.

THE HOLD-DOWN PLATE SHALL CONFORM TO AASHTO M270 GRADE 36. AFTER FABRICATION, THE HOLD-DOWN PLATE SHALL BE HOT-DIP GALVANIZED IN ACCORDANCE WITH AASHTO M111.

BOLTS SHALL CONFORM TO THE REQUIREMENTS OF ASTM A307 AND NUTS SHALL CONFORM TO THE REQUIREMENTS OF AASHTO M291. BOLTS, NUTS AND WASHERS SHALL BE GALVANIZED. (AT THE CONTRACTOR'S OPTION, STAINLESS STEEL BOLTS, NUTS AND WASHERS MAY BE USED AS AN ALTERNATE FOR THE 7/8" Ø GALVANIZED BOLTS, NUTS AND WASHERS. THEY SHALL CONFORM TO OR EXCEED THE MECHANICAL REQUIREMENTS OF ASTM A307. THE USE OF THIS ALTERNATE SHALL BE APPROVED BY THE ENGINEER.)

THE GUARDRAIL ANCHOR ASSEMBLY IS REQUIRED AT ALL POINTS WHERE APPROACH GUARDRAIL IS TO BE ATTACHED TO THE END OF BARRIER RAIL. FOR POINTS OF ATTACHMENT, SEE SKETCH.

AFTER INSTALLATION, THE EXPOSED THREAD OF THE BOLT SHALL BE BURRED WITH A SHARP POINTED TOOL.

THE COST OF THE GUARDRAIL ANCHOR ASSEMBLY SHALL BE INCLUDED IN THE UNIT CONTRACT PRICE BID FOR VERTICAL CONCRETE BARRIER RAIL.

THE VERTICAL REINFORCING BARS MAY BE SHIFTED SLIGHTLY IN THE VERTICAL CONCRETE BARRIER RAIL TO CLEAR ASSEMBLY BOLTS.

THE 1 1/4" Ø HOLES SHALL BE FORMED OR DRILLED WITH A CORE BIT. IMPACT TOOLS WILL NOT BE PERMITTED. ANY CONCRETE DAMAGED BY THIS WORK SHALL BE REPAIRED TO THE SATISFACTION OF THE ENGINEER.

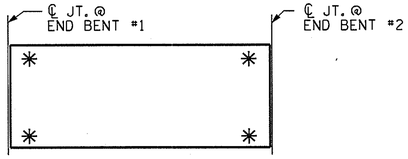

SKETCH SHOWING POINTS OF ATTACHMENT

✳ DENOTES GUARDRAIL ANCHOR ASSEMBLY

PROJECT NO. BD-5109S

ROWAN COUNTY

STATION: 13+55.00-L-

STATE OF NORTH CAROLINA
DEPARTMENT OF TRANSPORTATION
RALEIGH

STANDARD
GUARDRAIL ANCHORAGE FOR VERTICAL CONCRETE BARRIER RAIL

NORTH CAROLINA PROFESSIONAL SEAL 10730 ENGINEER D. ANDREW DAVENPORT, JR.
11/8/12

REVISIONS								SHEET NO.
NO.	BY:	DATE:	NO.	BY:	DATE:			S-10
1			3					TOTAL SHEETS
2			4					20

ASSEMBLED BY : D.A. DAVENPORT	DATE : 11/8/12
CHECKED BY : G.W. DICKEY	DATE : 11/8/12
DRAWN BY : MAA 5/10	ADDED 5/6/10
CHECKED BY : GM 5/10	REV. 10/1/11 MAA/GM REV. 12/5/11 MAA/GM

08-NOV-2012 14:42
R:\Structures\Plans\BD5109S_SD_CS.dgn
ddavenport

(SHT 1) STD. NO. GRA3

NOTES

STIRRUPS IN CAP MAY BE SHIFTED AS NECESSARY TO CLEAR DOWELS.

THE CONCRETE IN THE SHADED AREA OF THE WING SHALL BE POURED AFTER THE VERTICAL CONCRETE BARRIER RAIL IS CAST IF SLIP FORMING IS USED.

FOR PILE SPLICE DETAILS, SEE SHEET 4 OF 4.

FOR WING DETAILS, SEE SHEET 3 OF 4.

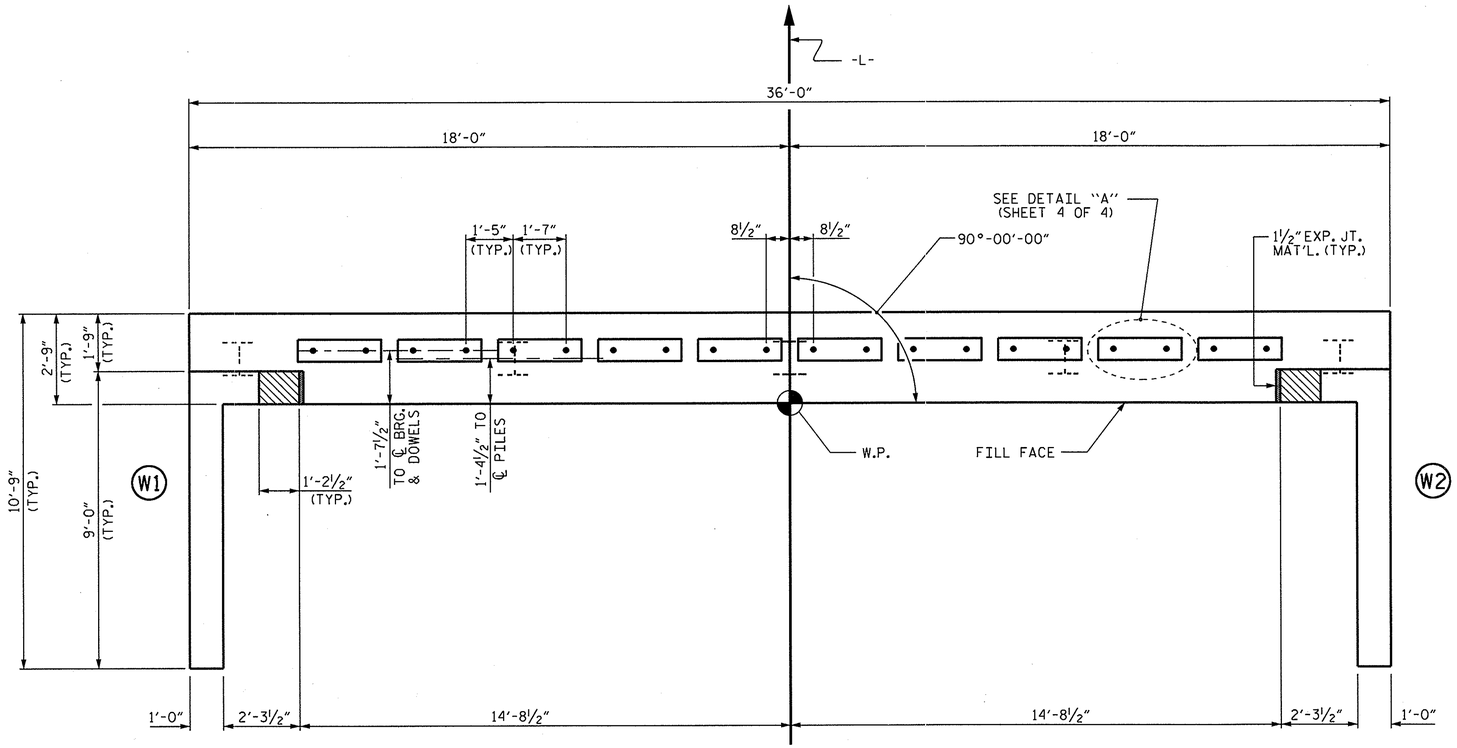

PLAN

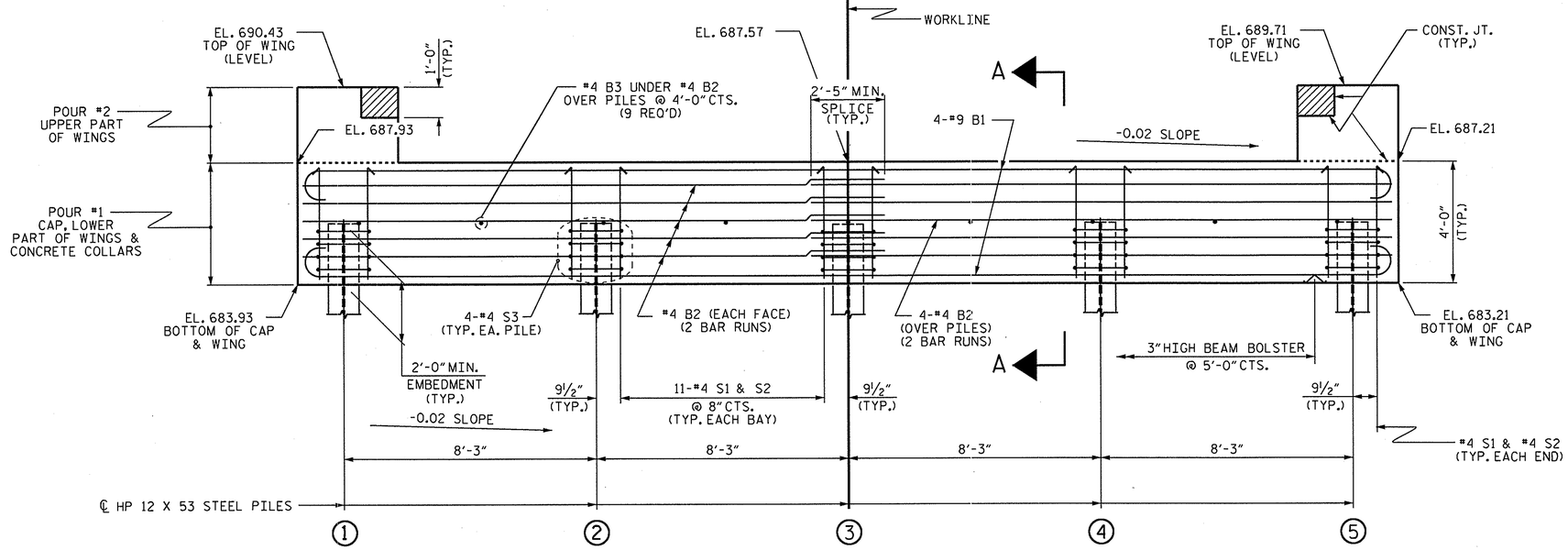

ELEVATION

WINGS NOT SHOWN FOR CLARITY.
FOR SECTION A-A, SEE SHEET 4 OF 4.
CONCRETE COLLARS FOR STEEL PILES NOT SHOWN IN PLAN AND ELEVATION VIEWS FOR CLARITY.
SEE "CORROSION PROTECTION FOR STEEL PILES DETAIL", SHEET 4 OF 4.

TOP OF PILE ELEVATIONS	
1	685.91
2	685.75
3	685.58
4	685.42
5	685.25

PROJECT NO. BD-5109S
ROWAN COUNTY
STATION: 13+55.00-L-

SHEET 1 OF 4

STATE OF NORTH CAROLINA
DEPARTMENT OF TRANSPORTATION
RALEIGH

SUBSTRUCTURE

END BENT No. 1

NORTH CAROLINA PROFESSIONAL SEAL 10730 ENGINEER D. ANDREW DAVENPORT, JR.
11-8-12

REVISIONS							SHEET NO.
NO.	BY:	DATE:	NO.	BY:	DATE:		S-11
1			3				TOTAL SHEETS
2			4				20

ASSEMBLED BY : D.A. DAVENPORT DATE : 07/27/12
CHECKED BY : J.P. McCARTHA DATE : 11/7/12
DRAWN BY : WJH 12/11
CHECKED BY : AAC 12/11

08-NOV-2012 07:09
R:\Structures\Plans\BD5109S_SD_CS.dgn
ddavenport

STD. NO. EB_30_90S4

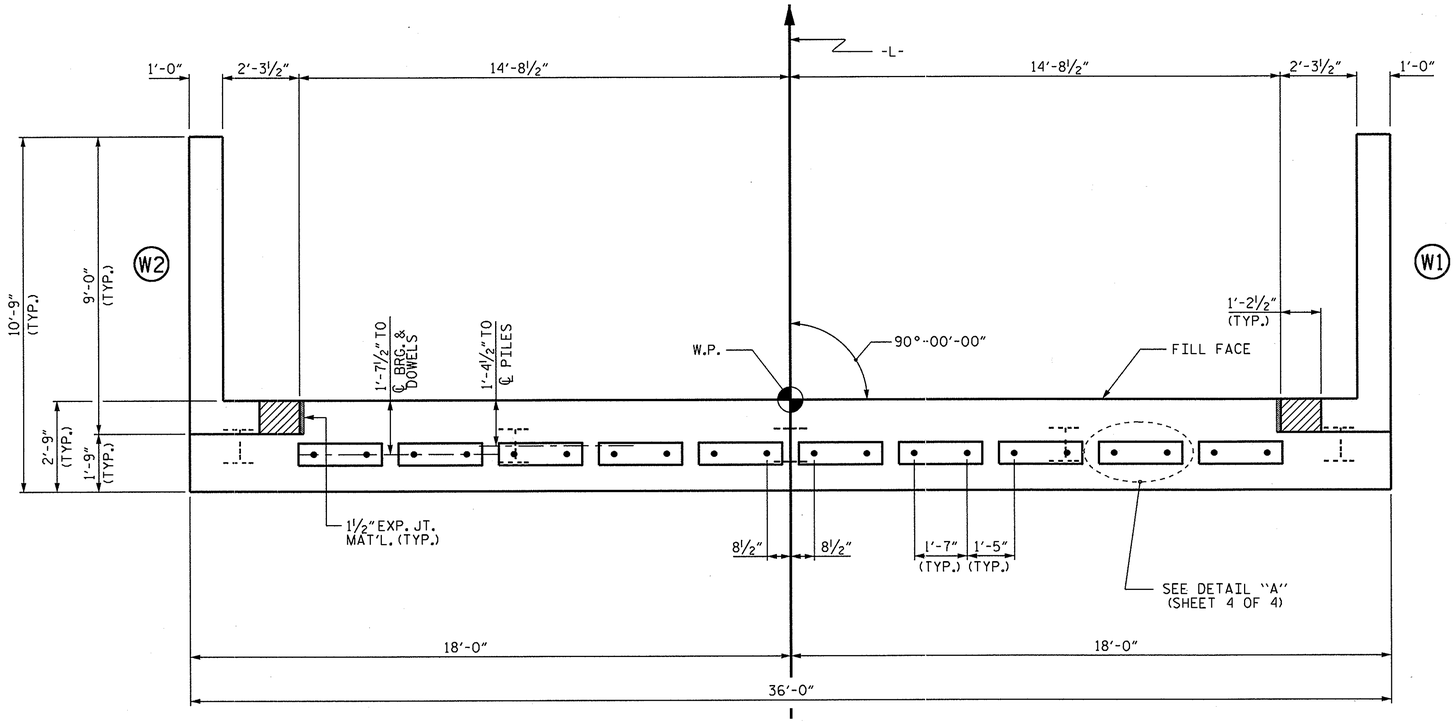

PLAN

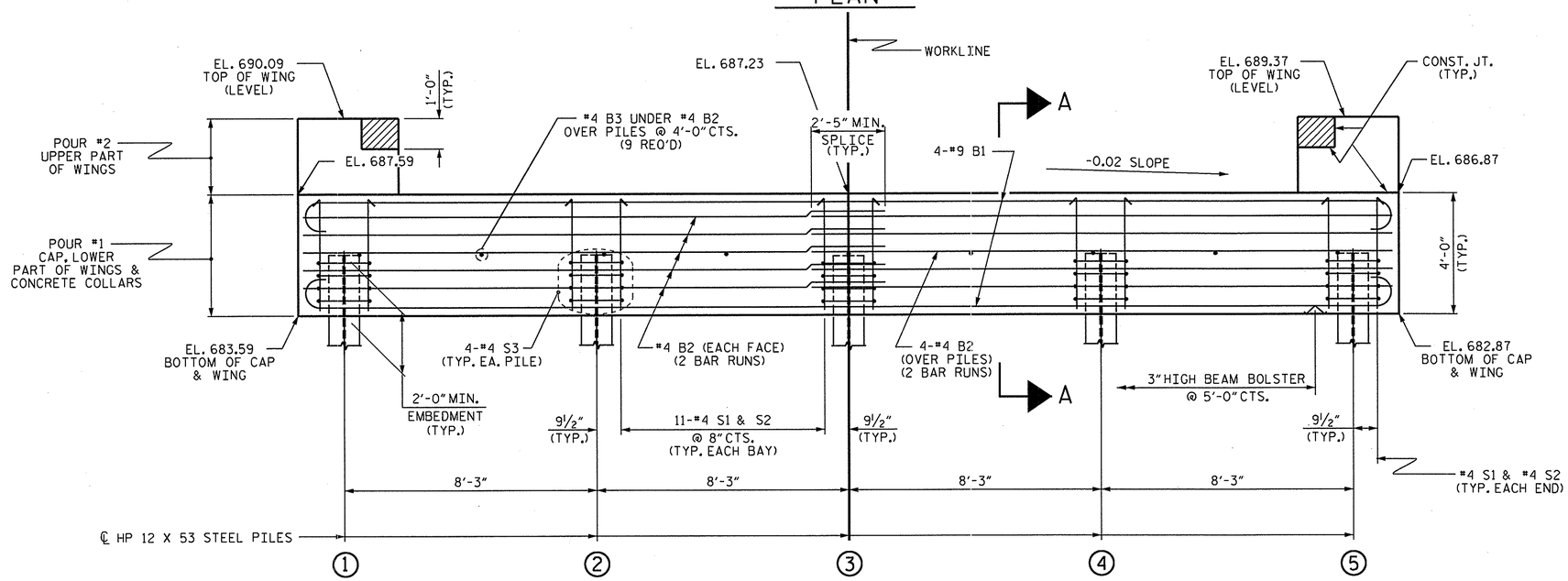

ELEVATION

WINGS NOT SHOWN FOR CLARITY.
FOR SECTION A-A, SEE SHEET 4 OF 4.
CONCRETE COLLARS FOR STEEL PILES NOT SHOWN IN PLAN AND ELEVATION VIEWS FOR CLARITY.
SEE "CORROSION PROTECTION FOR STEEL PILES DETAIL", SHEET 4 OF 4.

NOTES

STIRRUPS IN CAP MAY BE SHIFTED AS NECESSARY TO CLEAR DOWELS.

THE CONCRETE IN THE SHADED AREA OF THE WING SHALL BE POURED AFTER THE VERTICAL CONCRETE BARRIER RAIL IS CAST IF SLIP FORMING IS USED.

FOR PILE SPLICE DETAILS, SEE SHEET 4 OF 4.

FOR WING DETAILS, SEE SHEET 3 OF 4.

TOP OF PILE ELEVATIONS	
1	685.57
2	685.41
3	685.24
4	685.08
5	684.91

PROJECT NO. BD-5109S
ROWAN COUNTY
STATION: 13+55.00-L-

SHEET 2 OF 4

STATE OF NORTH CAROLINA
DEPARTMENT OF TRANSPORTATION
RALEIGH

SUBSTRUCTURE

END BENT No. 2

NORTH CAROLINA PROFESSIONAL SEAL 10730 ENGINEER D. ANDREW DAVENPORT, JR.
11-8-12

REVISIONS							SHEET NO.
NO.	BY:	DATE:	NO.	BY:	DATE:		S-12
1			3				TOTAL SHEETS
2			4				20

ASSEMBLED BY : D.A. DAVENPORT DATE : 07/27/12
CHECKED BY : J.P. McCARTHA DATE : 11/7/12

DRAWN BY : WJH 12/11
CHECKED BY : AAC 12/11

08-NOV-2012 07:09
R:\Structures\Plans\BD5109S_SD_CS.dgn
adavenport

STD. NO. EB_30_90S4

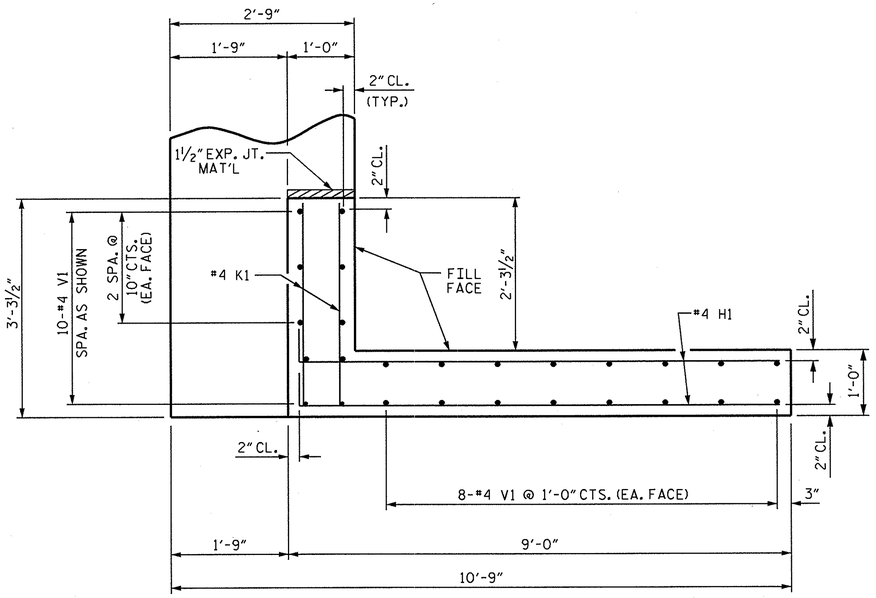

PLAN OF WING (W1)

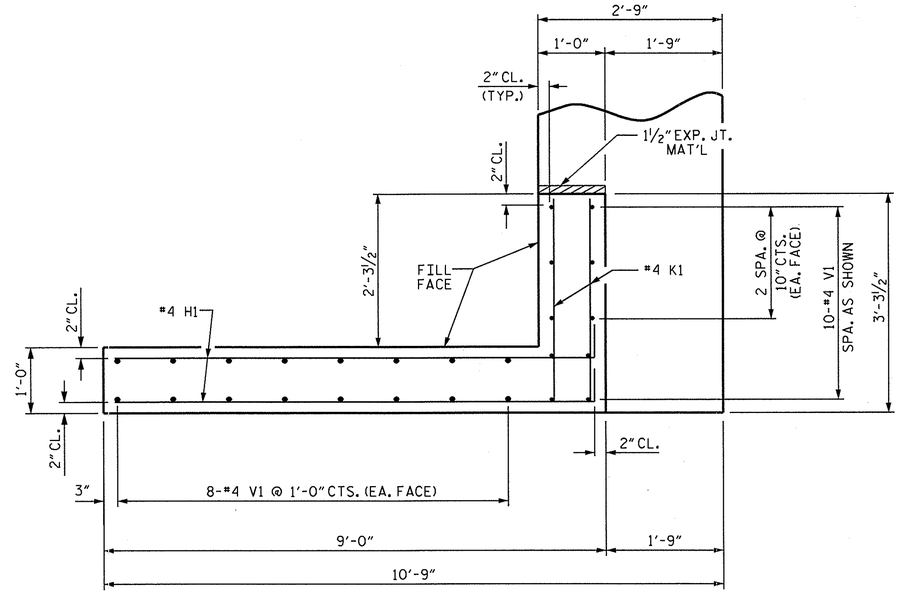

PLAN OF WING (W2)

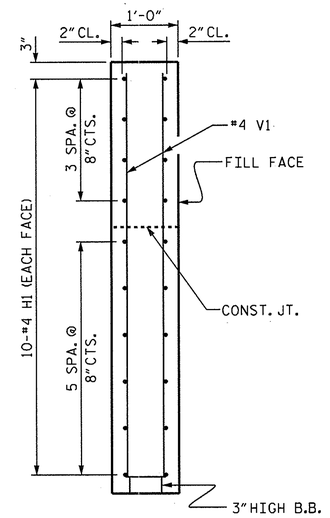

SECTION X-X

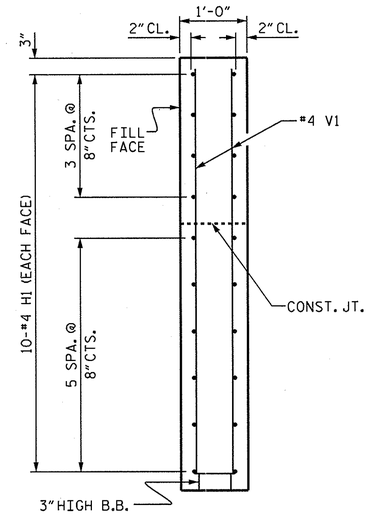

SECTION Y-Y

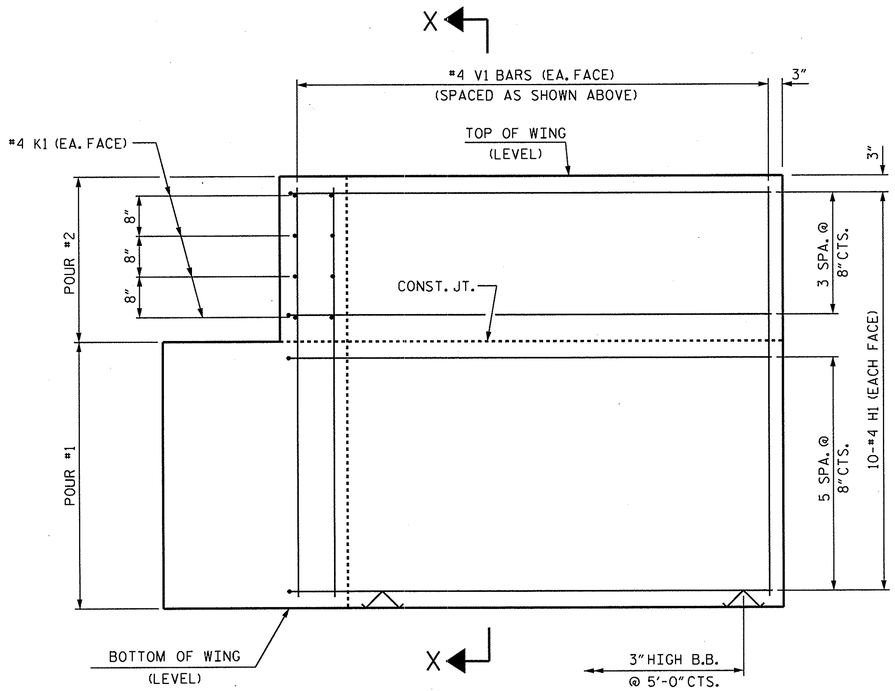

ELEVATION OF WING (W1)

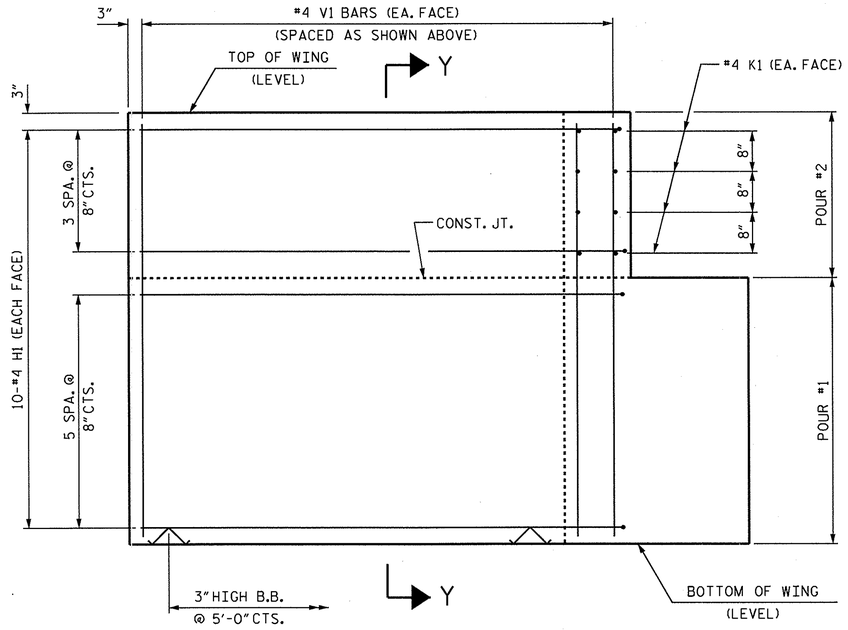

ELEVATION OF WING (W2)

WING DETAILS

PROJECT NO. BD-5109S

ROWAN COUNTY

STATION: 13+55.00-L-

SHEET 3 OF 4

STATE OF NORTH CAROLINA
DEPARTMENT OF TRANSPORTATION
RALEIGH

SUBSTRUCTURE

END BENT
WING DETAILS

NORTH CAROLINA PROFESSIONAL SEAL 10730 ENGINEER D. ANDREW DAVENPORT, JR.

REVISIONS								SHEET NO.
NO.	BY:	DATE:	NO.	BY:	DATE:			S-13
1			3					TOTAL SHEETS
2			4					20

ASSEMBLED BY : D.A. DAVENPORT DATE : 07/27/12
CHECKED BY : J.P. McCARTHA DATE : 11/7/12

DRAWN BY : WJH 12/11
CHECKED BY : AAC 12/11

08-NOV-2012 07:09
R:\Structures\Plans\BD5109S_SD_CS.dgn
adavenport

STD. NO. EB_30_90S4

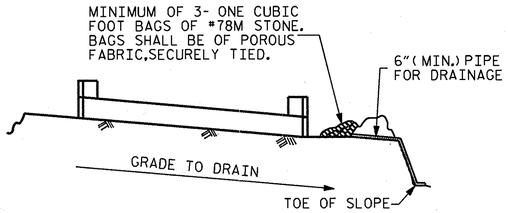

BAGGED STONE AND PIPE SHALL BE PLACED IMMEDIATELY AFTER COMPLETION OF END BENT EXCAVATION. PIPE MAY BE EITHER CONCRETE, CORRUGATED STEEL, CORRUGATED ALUMINUM ALLOY, OR CORRUGATED PLASTIC. PERFORATED PIPE WILL NOT BE ALLOWED.

BAGGED STONE SHALL REMAIN IN PLACE UNTIL THE ENGINEER DIRECTS THAT IT BE REMOVED. THE CONTRACTOR SHALL REMOVE AND DISPOSE OF SILT ACCUMULATIONS AT BAGGED STONE WHEN SO DIRECTED BY THE ENGINEER. BAGS SHALL BE REMOVED AND REPLACED WHENEVER THE ENGINEER DETERMINES THAT THEY HAVE DETERIORATED AND LOST THEIR EFFECTIVENESS.

NO SEPARATE PAYMENT WILL BE MADE FOR THIS WORK AND THE ENTIRE COST OF THIS WORK SHALL BE INCLUDED IN THE UNIT CONTRACT PRICE BID FOR THE SEVERAL PAY ITEMS.

TEMPORARY DRAINAGE AT END BENT

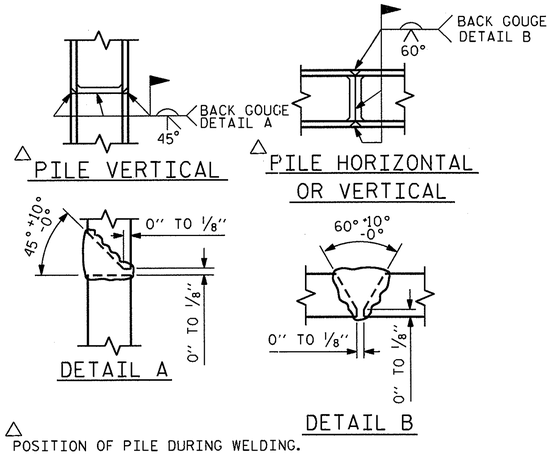

△ POSITION OF PILE DURING WELDING.

PILE SPLICE DETAILS

BAR TYPES

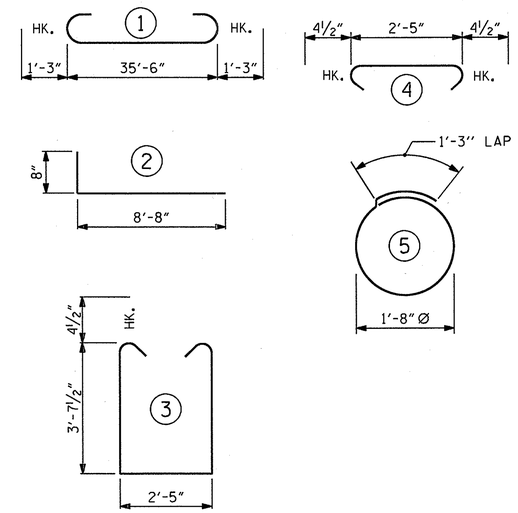

ALL BAR DIMENSIONS ARE OUT TO OUT.

END BENT No. 1	END BENT No. 2
HP 12 X 53 STEEL PILES	HP 12 X 53 STEEL PILES
NO: 5 LIN. FT.= 205	NO: 5 LIN. FT.= 190

BILL OF MATERIAL FOR ONE END BENT

BAR	NO.	SIZE	TYPE	LENGTH	WEIGHT
B1	8	#9	1	38'-0"	1034
B2	28	#4	STR	19'-1"	357
B3	9	#4	STR	2'-5"	15
D1	20	#6	STR	1'-6"	45
H1	40	#4	2	9'-4"	249
K1	16	#4	STR	2'-11"	31
S1	46	#4	3	10'-5"	320
S2	46	#4	4	3'-2"	97
S3	20	#4	5	6'-6"	87
V1	52	#4	STR	6'-2"	214

REINFORCING STEEL (FOR ONE END BENT) 2449 LBS.

CLASS A CONCRETE BREAKDOWN (FOR ONE END BENT)

POUR #1 CAP, LOWER PART OF WINGS & COLLARS 17.9 C.Y.

POUR #2 UPPER PART OF WINGS 2.1 C.Y.

TOTAL CLASS A CONCRETE 20.0 C.Y.

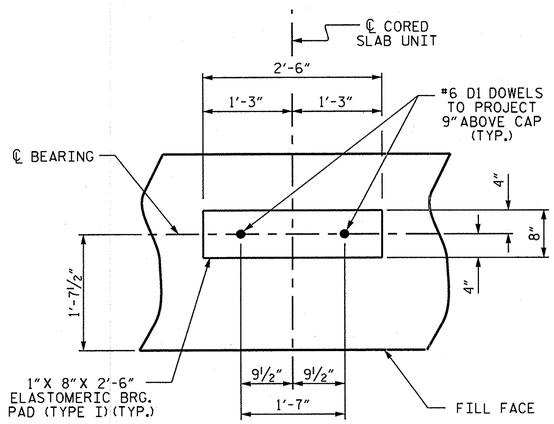

DETAIL "A"

(END BENT No. 1 SHOWN, END BENT No. 2 SIMILAR BY ROTATION)

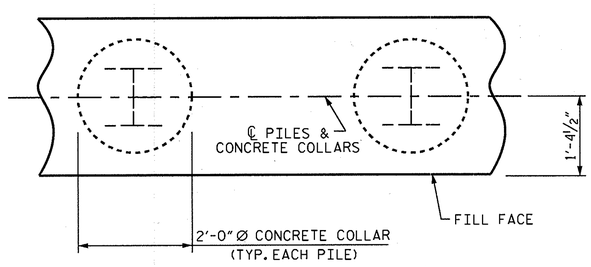

PLAN

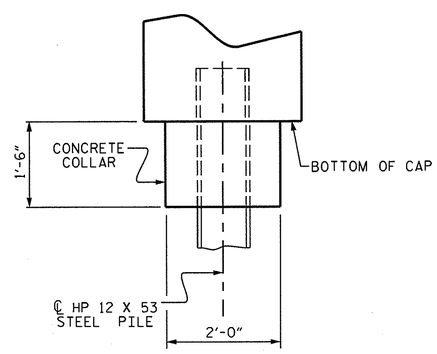

ELEVATION

CORROSION PROTECTION FOR STEEL PILES DETAIL

(END BENT No. 1 SHOWN, END BENT No. 2 SIMILAR BY ROTATION)

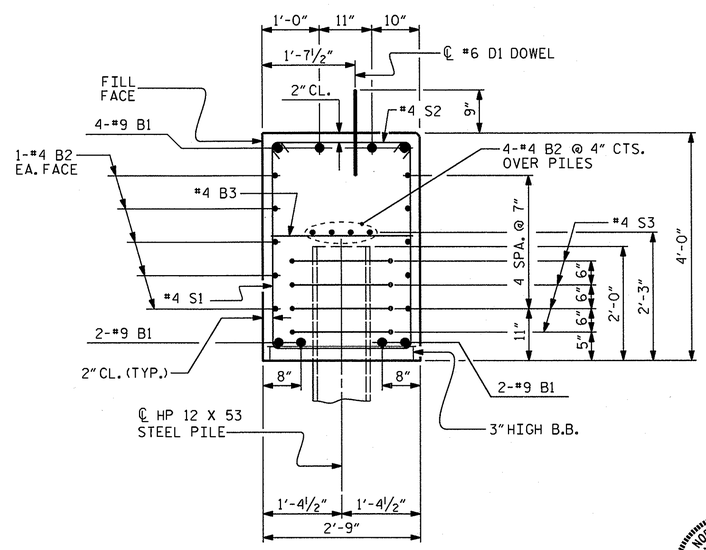

SECTION A-A

(CONCRETE COLLAR NOT SHOWN FOR CLARITY. SEE "CORROSION PROTECTION FOR STEEL PILES DETAIL.")

NORTH CAROLINA PROFESSIONAL SEAL 10730 ENGINEER D. ANDREW DAVENPORT, III
11-8-12

PROJECT NO. BD-5109S
ROWAN COUNTY
STATION: 13+55.00-L-

SHEET 4 OF 4

STATE OF NORTH CAROLINA
DEPARTMENT OF TRANSPORTATION
RALEIGH

SUBSTRUCTURE

END BENT No. 1 & 2 DETAILS

REVISIONS								SHEET NO.
NO.	BY:	DATE:	NO.	BY:	DATE:			S-14
1			3					TOTAL SHEETS
2			4					20

ASSEMBLED BY : D.A. DAVENPORT DATE : 07/27/12
CHECKED BY : J.P. McCARTHA DATE : 11/7/12

DRAWN BY : WJH 12/11
CHECKED BY : AAC 12/11

08-NOV-2012 07:10
R:\Structures\Plans\BD5109S_SD_CS.dgn
ddavenport

STD. NO. EB_30_90S4

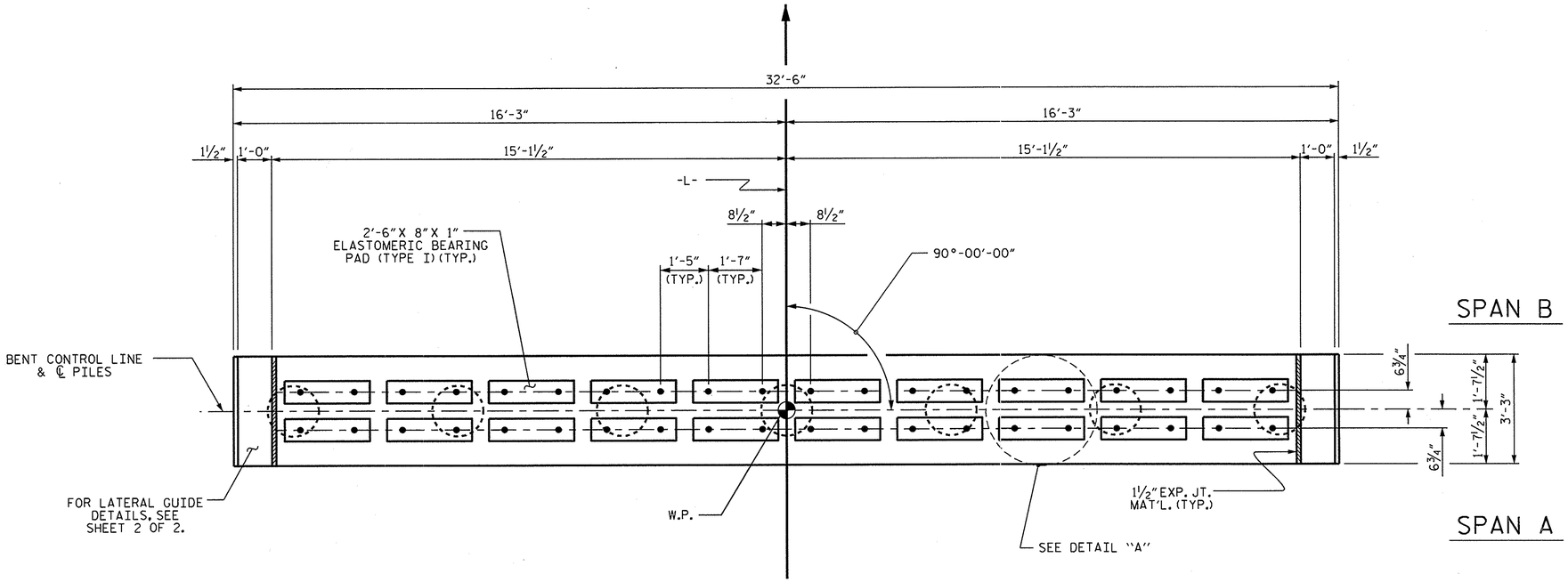

PLAN

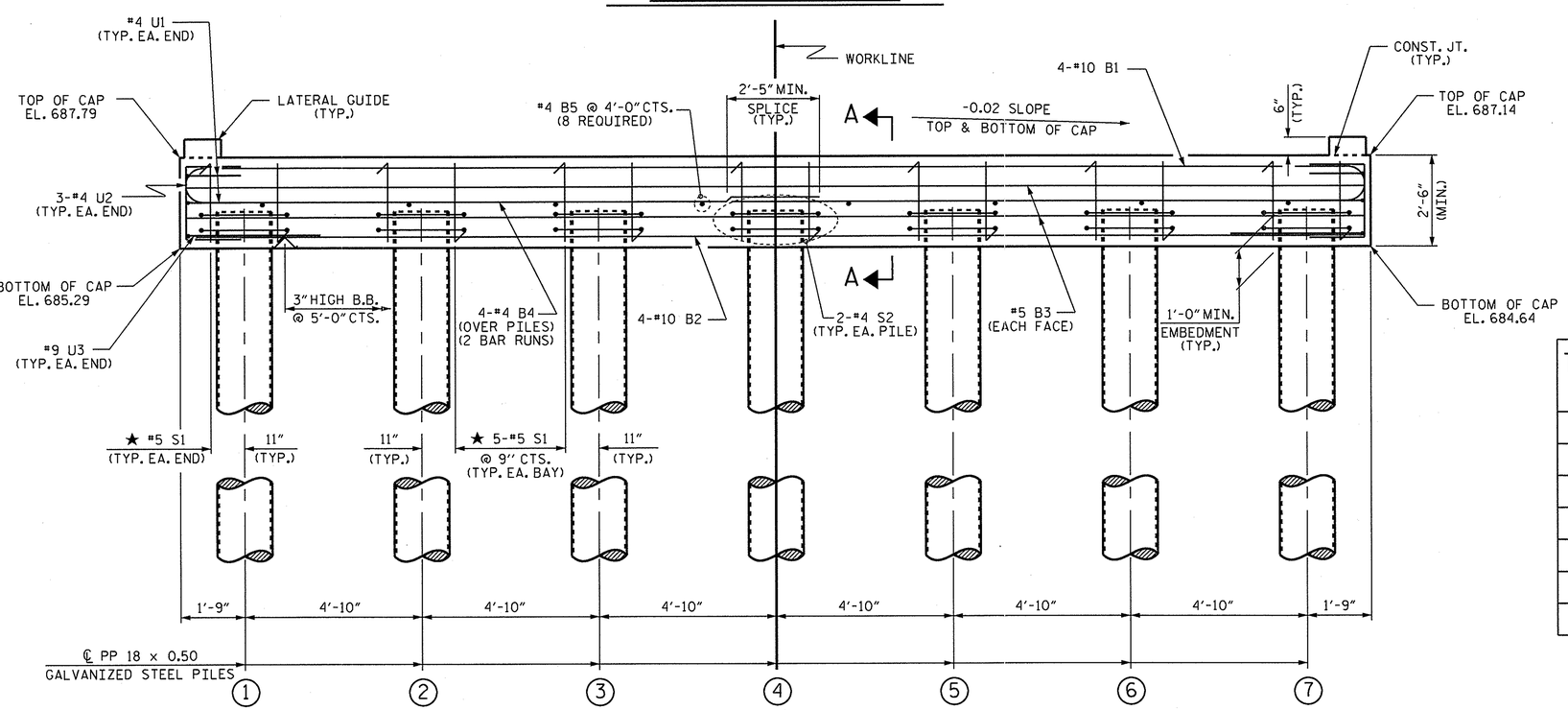

ELEVATION

FOR SECTION A-A, SEE SHEET 2 OF 3

NOTES

STIRRUPS IN CAP MAY BE SHIFTED AS NECESSARY TO CLEAR DOWELS.

THE LATERAL GUIDES ARE NOT TO BE POURED UNTIL AFTER THE CORED SLAB UNITS ARE IN PLACE.

★ INVERT ALTERNATE STIRRUPS.

FOR ADDITIONAL REINFORCING STEEL IN PP 18 x 0.50 GALVANIZED STEEL PILES, SEE SHEET 3 OF 3.

GALVANIZE THE TOP OF EACH INTERIOR BENT PILE A MINIMUM OF 28 FEET. GALVANIZE IN ACCORDANCE WITH SECTION 1076 OF THE STANDARD SPECIFICATIONS.

THE CONTRACTOR HAS THE OPTION TO OMIT THE LATERAL GUIDE IF APPROVED BY THE ENGINEER.

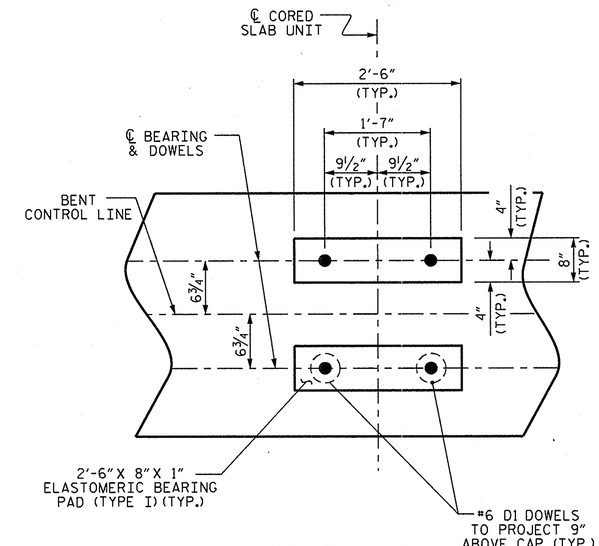

DETAIL "A"

(DIMENSIONS ARE TYPICAL EACH BEARING)

TOP OF PILE ELEVATIONS	
1	686.27
2	686.17
3	686.07
4	685.98
5	685.88
6	685.78
7	685.69

PROJECT NO. BD-5109S

ROWAN COUNTY

STATION: 13+55.00-L-

SHEET 1 OF 3

STATE OF NORTH CAROLINA
DEPARTMENT OF TRANSPORTATION
RALEIGH

SUBSTRUCTURE

BENT No. 1

NORTH CAROLINA PROFESSIONAL SEAL 10730 ENGINEER D. ANDREW DAVENPORT, JR.

REVISIONS						SHEET NO.
NO.	BY:	DATE:	NO.	BY:	DATE:	S-15
1			3			TOTAL SHEETS
2			4			20

ASSEMBLED BY : D.A. DAVENPORT DATE : 11/7/12
CHECKED BY : J.P. McCARTHA DATE : 11/7/12

DRAWN BY : DGE 06/10
CHECKED BY : MKT 06/10

08-NOV-2012 07:10
R:\Structures\Plans\BD5109S_SD_CS.dgn
adavenport

STD.NO. 18" PP_BT_30_90S_<60'

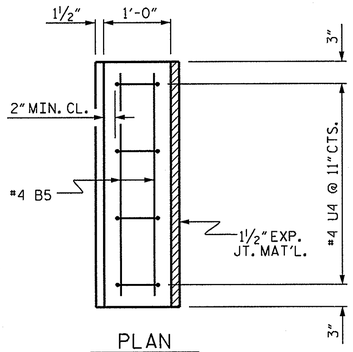

PLAN

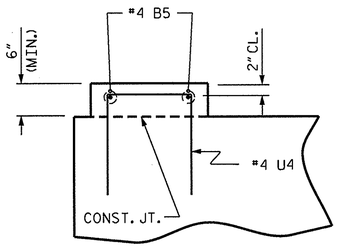

ELEVATION

LATERAL GUIDE DETAILS

(LEFT LATERAL GUIDE SHOWN, RIGHT SIDE SIMILAR)

BAR TYPES

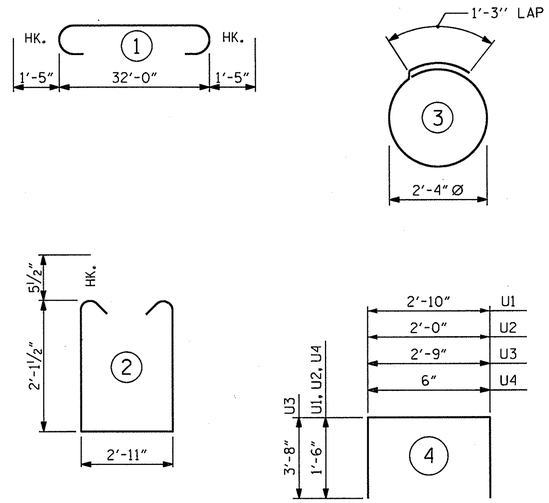

ALL BAR DIMENSIONS ARE OUT TO OUT.

BILL OF MATERIAL FOR ONE BENT

BAR	NO.	SIZE	TYPE	LENGTH	WEIGHT
B1	4	#10	1	34'-10"	600
B2	4	#10	STR	32'-2"	554
B3	4	#5	STR	32'-2"	134
B4	8	#4	STR	17'-4"	93
B5	12	#4	STR	2'-11"	23
D1	40	#6	STR	1'-6"	90
S1	32	#5	2	8'-1"	270
S2	14	#4	3	8'-7"	80
U1	4	#4	4	5'-10"	16
U2	6	#4	4	5'-0"	20
U3	2	#9	4	10'-1"	69
U4	8	#4	4	3'-6"	19

REINFORCING STEEL (FOR ONE BENT) 1968 LBS

CLASS A CONCRETE BREAKDOWN (FOR ONE BENT)

POUR #1 (CAP) ▲ 9.3 C.Y.

POUR #2 (LATERAL GUIDES) 0.1 C.Y.

TOTAL CLASS A CONCRETE 9.4 C.Y.

PP 18 x 0.50 GALVANIZED STEEL PILES (FOR ONE BENT)

No. 7 LIN. FT. 355

PIPE PILE PLATES No. = 7

▲ CONCRETE DISPLACED BY THE PP 18 x 0.50 GALVANIZED STEEL PILES HAS BEEN DEDUCTED FROM THE CONCRETE QUANTITY.

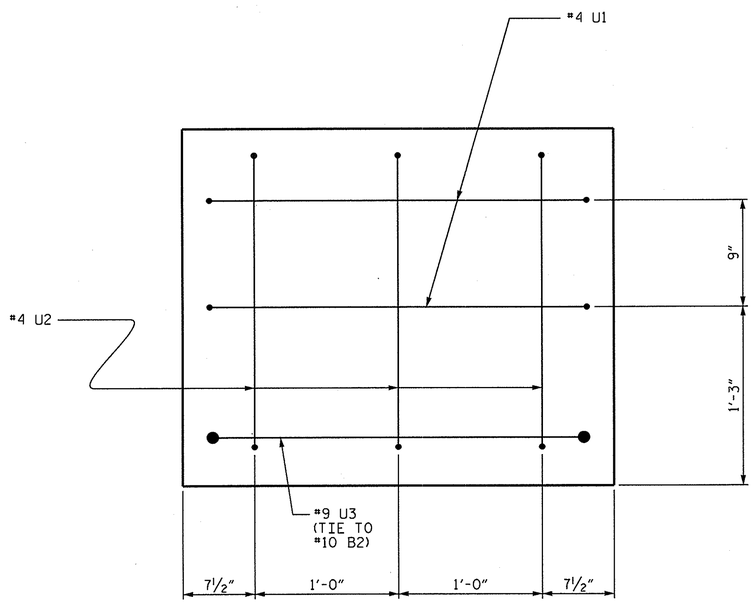

END OF CAP VIEW

(TYPICAL BOTH ENDS)

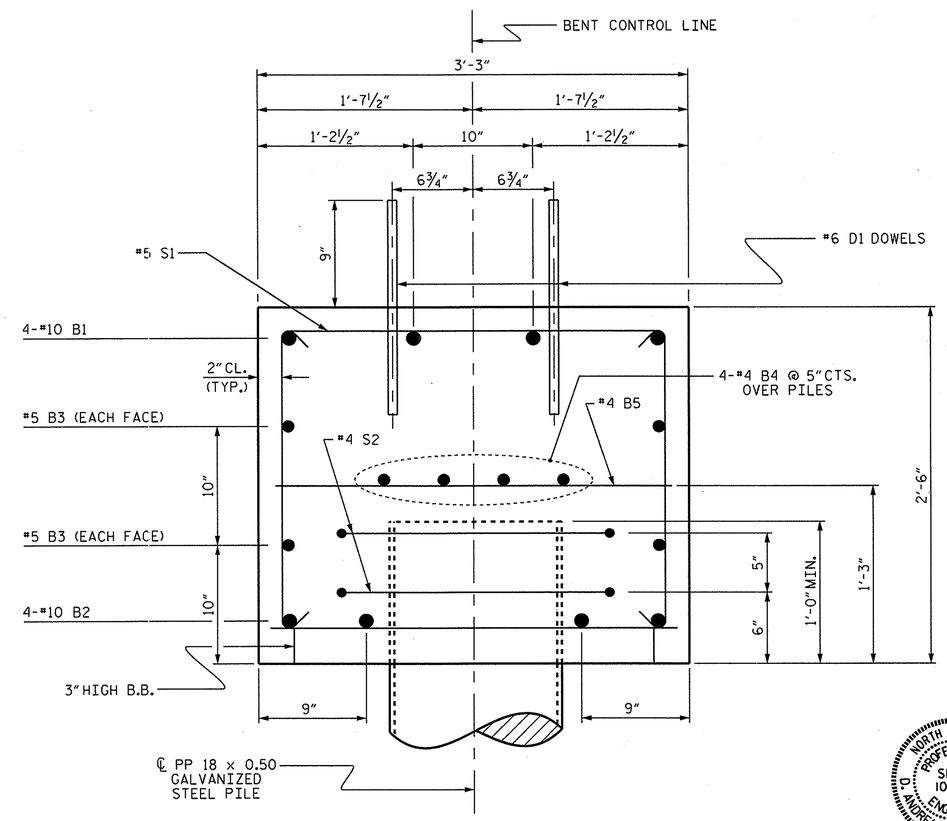

SECTION A-A

NORTH CAROLINA PROFESSIONAL SEAL 10730 ENGINEER LANDRE DAVENPORT, JR.

11-8-12

PROJECT NO. BD-5109S

ROWAN COUNTY

STATION: 13+55.00-L-

SHEET 2 OF 3

STATE OF NORTH CAROLINA
DEPARTMENT OF TRANSPORTATION
RALEIGH

SUBSTRUCTURE

BENT No. 1

REVISIONS							SHEET NO.
NO.	BY:	DATE:	NO.	BY:	DATE:		S-16
1			3				TOTAL SHEETS
2			4				20

DRAWN BY : D.A. DAVENPORT DATE : 11/7/12
CHECKED BY : J.P. McCARTHA DATE : 11/7/12

DRAWN BY : DGE 06/10
CHECKED BY : MKT 06/10

08-NOV-2012 07:10
R:\Structures\Plans\BD5109S_SD_CS.dgn
ddavenport

STD.NO. 18" PP_BT_30_90S_<60'

NOTES

STIRRUPS IN CAP MAY BE SHIFTED AS NECESSARY TO CLEAR DOWELS.

THE LATERAL GUIDES ARE NOT TO BE POURED UNTIL AFTER THE CORED SLAB UNITS ARE IN PLACE.

★ INVERT ALTERNATE STIRRUPS.

FOR ADDITIONAL REINFORCING STEEL IN PP 18 × 0.50 GALVANIZED STEEL PILES, SEE SHEET 3 OF 3.

GALVANIZE THE TOP OF EACH INTERIOR BENT PILE A MINIMUM OF 28 FEET. GALVANIZE IN ACCORDANCE WITH SECTION 1076 OF THE STANDARD SPECIFICATIONS.

THE CONTRACTOR HAS THE OPTION TO OMIT THE LATERAL GUIDE IF APPROVED BY THE ENGINEER.

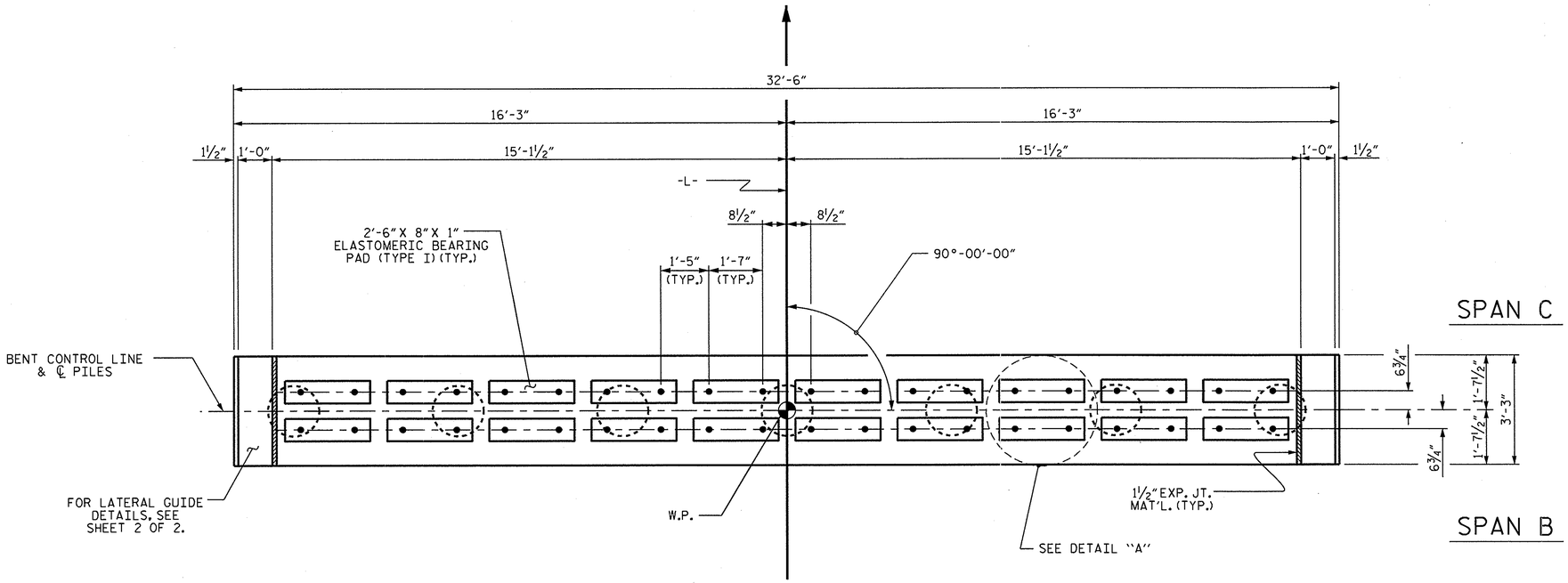

PLAN

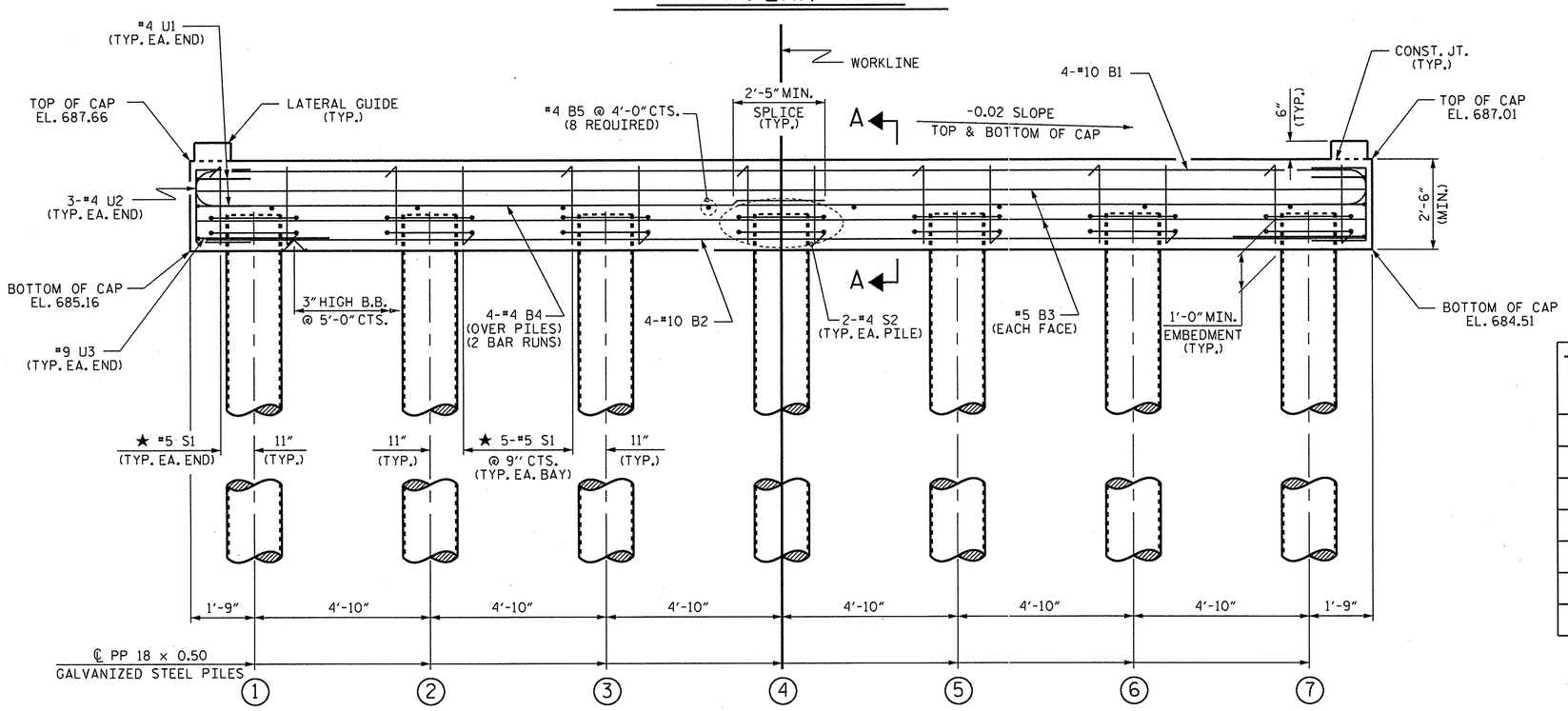

ELEVATION

FOR SECTION A-A, SEE SHEET 2 OF 3

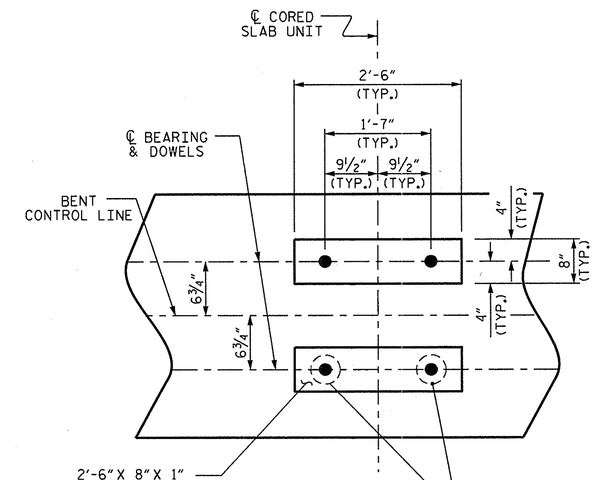

DETAIL "A"

(DIMENSIONS ARE TYPICAL EACH BEARING)

TOP OF PILE ELEVATIONS	
1	686.14
2	686.04
3	685.94
4	685.85
5	685.75
6	685.65
7	685.56

PROJECT NO. BD-5109S

ROWAN COUNTY

STATION: 13+55.00-L-

SHEET 1 OF 3

STATE OF NORTH CAROLINA
DEPARTMENT OF TRANSPORTATION
RALEIGH

SUBSTRUCTURE

BENT No. 2

NORTH CAROLINA PROFESSIONAL SEAL 10730 ENGINEER D. ANDREW DAVENPORT, JR.

11-8-12

REVISIONS						SHEET NO.
NO.	BY:	DATE:	NO.	BY:	DATE:	S-17
1			3			TOTAL SHEETS
2			4			20

ASSEMBLED BY : D.A. DAVENPORT DATE : 11/7/12
CHECKED BY : J.P. McCARTHA DATE : 11/7/12

DRAWN BY : DGE 06/10
CHECKED BY : MKT 06/10

08-NOV-2012 07:10
R:\Structures\Plans\BD5109S_SD_CS.dgn
ddavenport

STD.NO. 18"PP_BT_30_90S_<60'

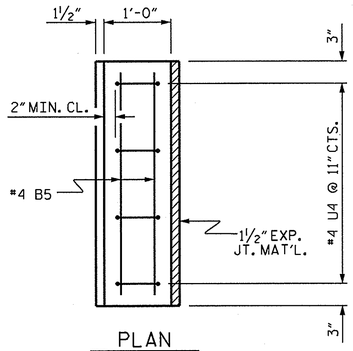

PLAN

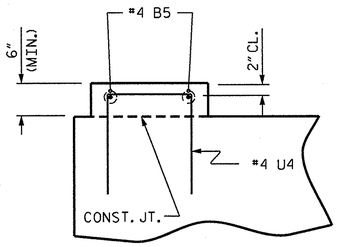

ELEVATION

LATERAL GUIDE DETAILS

(LEFT LATERAL GUIDE SHOWN, RIGHT SIDE SIMILAR)

BAR TYPES

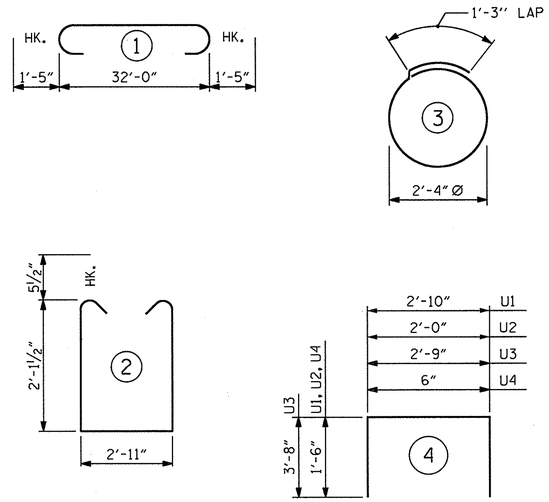

ALL BAR DIMENSIONS ARE OUT TO OUT.

BILL OF MATERIAL
FOR ONE BENT

BAR	NO.	SIZE	TYPE	LENGTH	WEIGHT
B1	4	#10	1	34'-10"	600
B2	4	#10	STR	32'-2"	554
B3	4	#5	STR	32'-2"	134
B4	8	#4	STR	17'-4"	93
B5	12	#4	STR	2'-11"	23
D1	40	#6	STR	1'-6"	90
S1	32	#5	2	8'-1"	270
S2	14	#4	3	8'-7"	80
U1	4	#4	4	5'-10"	16
U2	6	#4	4	5'-0"	20
U3	2	#9	4	10'-1"	69
U4	8	#4	4	3'-6"	19

REINFORCING STEEL (FOR ONE BENT) 1968 LBS

CLASS A CONCRETE BREAKDOWN (FOR ONE BENT)

POUR #1 (CAP) ▲ 9.3 C.Y.
POUR #2 (LATERAL GUIDES) 0.1 C.Y.

TOTAL CLASS A CONCRETE 9.4 C.Y.

PP 18 x 0.50 GALVANIZED STEEL PILES (FOR ONE BENT)

No. 7 LIN. FT. 300

PIPE PILE PLATES No. = 7

▲ CONCRETE DISPLACED BY THE PP 18 x 0.50 GALVANIZED STEEL PILES HAS BEEN DEDUCTED FROM THE CONCRETE QUANTITY.

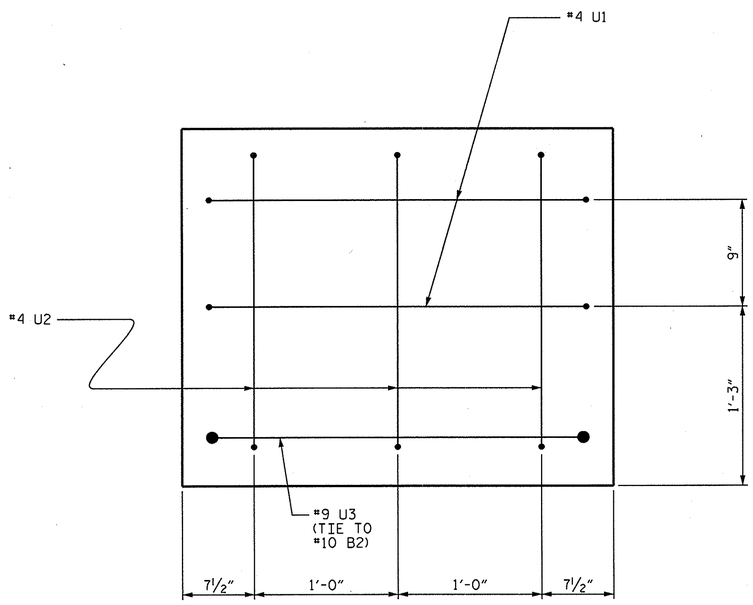

END OF CAP VIEW

(TYPICAL BOTH ENDS)

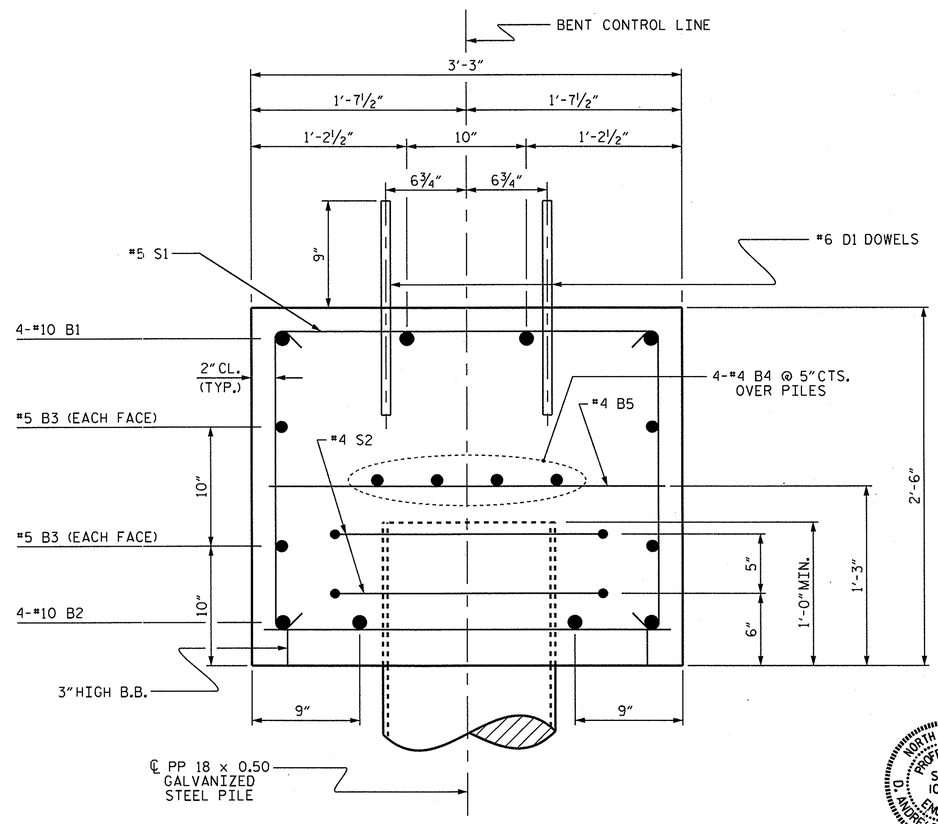

SECTION A-A

PROJECT NO. BD-5109S
ROWAN COUNTY
STATION: 13+55.00-L-

SHEET 2 OF 3

STATE OF NORTH CAROLINA
DEPARTMENT OF TRANSPORTATION
RALEIGH

SUBSTRUCTURE

BENT No. 2

NORTH CAROLINA PROFESSIONAL SEAL 10730 ENGINEER D. ANDRE DAVENPORT, JR.
11-8-12

REVISIONS								SHEET NO.
NO.	BY:	DATE:	NO.	BY:	DATE:			S-18
1			3					TOTAL SHEETS
2			4					20

DRAWN BY : D.A. DAVENPORT DATE : 11/7/12
CHECKED BY : J.P. McCARTHA DATE : 11/7/12

DRAWN BY : DGE 06/10
CHECKED BY : MKT 06/10

08-NOV-2012 07:10
R:\Structures\Plans\BD5109S_SD_CS.dgn
ddavenport

STD.NO. 18" PP_BT_30_90S_<60'

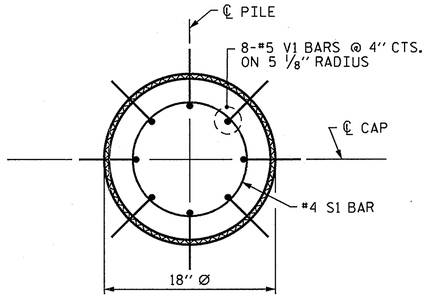

PLAN

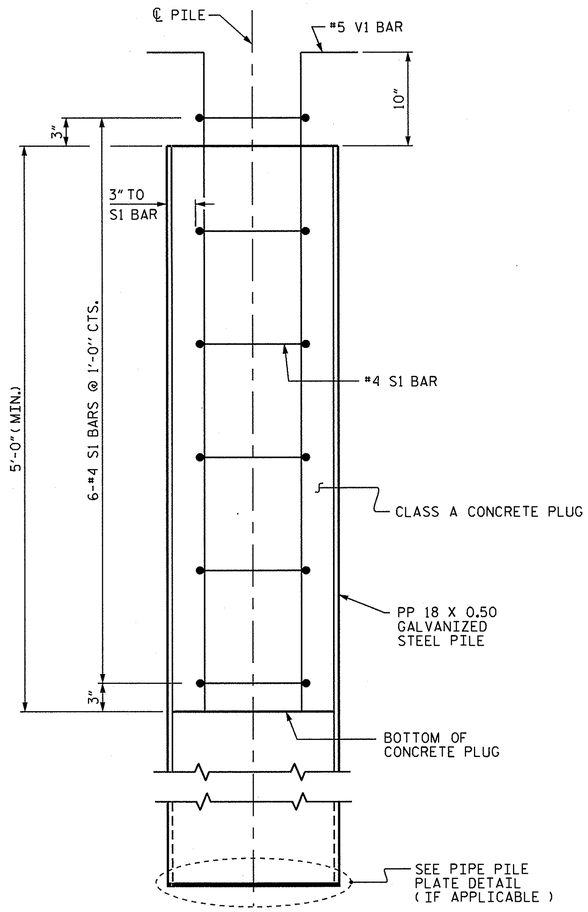

ELEVATION

PP 18 X 0.50 GALVANIZED STEEL PILE

(OPEN OR CLOSED END)

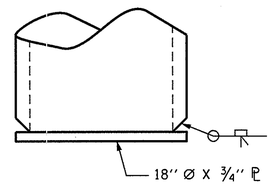

PIPE PILE PLATE DETAIL

(IF APPLICABLE)

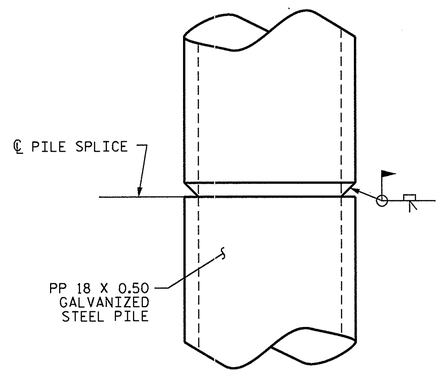

PIPE PILE SPLICE DETAIL

NOTES

PIPE PILES SHALL BE IN ACCORDANCE WITH SECTION 1084 OF THE STANDARD SPECIFICATIONS.

GALVANIZE STEEL PIPE PILES IN ACCORDANCE WITH SECTION 1076 OF THE STANDARD SPECIFICATIONS UNLESS METALLIZING IS REQUIRED. GALVANIZING OR METALLIZING PIPE PILE PLATES IS NOT REQUIRED.

PIPE PILE PLATES, IF REQUIRED, SHALL BE IN ACCORDANCE WITH SECTION 450 OF THE STANDARD SPECIFICATIONS.

REMOVE AND REPLACE OR REPAIR TO THE SATISFACTION OF THE ENGINEER PILES THAT ARE DAMAGED, DEFORMED OR COLLAPSED DURING INSTALLATION OR DRIVING.

PILE SPLICES SHALL BE IN ACCORDANCE WITH THE STANDARD SPECIFICATIONS AND AWS D1.1.

FOR CLOSED END PIPE PILES, REMOVE ALL SOIL AND WATER FROM INSIDE THE PILES JUST PRIOR TO PLACING REINFORCING STEEL AND CONCRETE FOR THE CONCRETE PLUG.

FOR OPEN END PIPE PILES, REMOVE ENOUGH SOIL AND WATER FROM INSIDE THE PILES TO CONSTRUCT THE CONCRETE PLUG WITHOUT FOULING THE CONCRETE.

FORM THE CONCRETE PLUG SUCH THAT THE REINFORCING STEEL OR CONCRETE DOES NOT MOVE AND THE CLEARANCE FROM THE REINFORCING STEEL TO THE INSIDE OF THE PILE IS MAINTAINED AFTER CONCRETE PLACEMENT. DO NOT PLACE CONCRETE IN THE BENT CAP UNTIL THE CONCRETE PLUG HAS ATTAINED A MINIMUM COMPRESSIVE STRENGTH OF 1500 PSI.

THE REINFORCING STEEL, CLASS A CONCRETE, AND GALVANIZING ARE CONSIDERED INCIDENTAL TO THE CONTRACT UNIT PRICE BID PER LINEAR FOOT FOR PP 18 X 0.50 GALVANIZED STEEL PILES.

BILL OF MATERIAL FOR ONE PP 18 X 0.50 GALVANIZED STEEL PILE

BAR	NO.	SIZE	TYPE	LENGTH	WEIGHT
S1	6	#4	1	4'-5''	18
V1	8	#5	2	6'-8''	56
REINFORCING STEEL =				74	lbs
CLASS A CONCRETE					
5'-0'' MINIMUM PLUG					0.3 CY

BAR TYPES

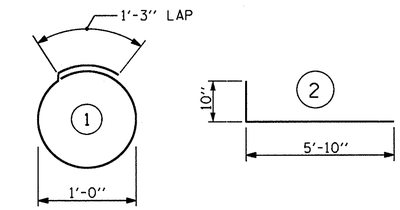

ALL BAR DIMENSIONS ARE OUT TO OUT.

PROJECT NO. BD-5109S

ROWAN COUNTY

STATION: 13+55.00-L-

STATE OF NORTH CAROLINA
DEPARTMENT OF TRANSPORTATION
RALEIGH

STANDARD

18'' STEEL PIPE PILE

NORTH CAROLINA PROFESSIONAL SEAL 10730 ENGINEER D. ANDRE DAVENPORT, JR.

11-8-12

REVISIONS								SHEET NO. S-19
NO.	BY:	DATE:	NO.	BY:	DATE:			
1			3					TOTAL SHEETS 20
2			4					

ASSEMBLED BY : D.A. DAVENPORT		DATE : 11/7/12	
CHECKED BY : J.P. McCARTHA		DATE : 11/7/12	
DRAWN BY : RWW 1/01	REV. 10/1/05	LBG/TLA	
CHECKED BY : LES 1/01	REV. 5/1/06R	MAA/KMM	
	REV. 10/1/11	MAA/GM	

08-NOV-2012 07:11
R:\Structures\Plans\BD5109S_SD_CS.dgn
ddavenport

STD. NO. SPP3

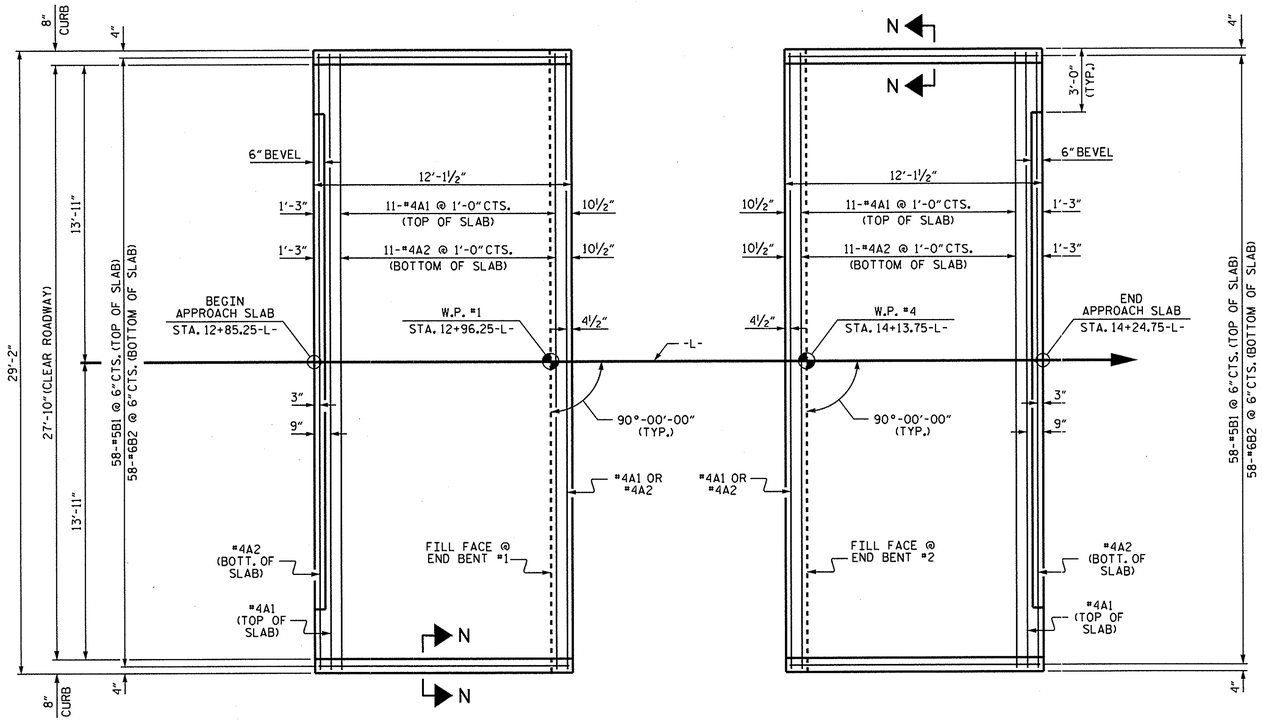

PLAN @ END BENT #1

PLAN @ END BENT #2

DIMENSIONS SHOWN ARE TYPICAL FOR BOTH APPROACH SLABS

NOTES

FOR BRIDGE APPROACH FILL INCLUDING GEOTEXTILE, 4"Ø DRAINAGE PIPE, AND #78M STONE BACKFILL, SEE ROADWAY PLANS.

GEOTEXTILE SHALL BE TYPE 1IN ACCORDANCE WITH THE STANDARD SPECIFICATIONS SECTION 1056.

#78M STONE BACKFILL (CLASS V SELECT MATERIAL) SHALL BE IN ACCORDANCE WITH STANDARD SPECIFICATIONS SECTION 1016.

#78M STONE BACKFILL IS TO BE CONTINUOUS ALONG FILL FACE OF BACKWALL FROM OUTSIDE EDGE TO OUTSIDE EDGE OF APPROACH SLAB.

FOR THE 4"Ø DRAINAGE PIPE OUTLET(S), SEE ROADWAY STANDARD DRAWINGS.

AREA BETWEEN THE WINGWALL AND APPROACH SLAB SHALL BE GRADED TO DRAIN THE WATER AWAY FROM THE FILL FACE OF THE BRIDGE AND SHALL BE PAVED. SEE ROADWAY PLANS.

APPROACH SLAB GROOVING IS NOT REQUIRED.

BILL OF MATERIAL

APPROACH SLAB AT EB #1

BAR	NO.	SIZE	TYPE	LENGTH	WEIGHT
* A1	13	#4	STR	28'-10"	250
A2	13	#4	STR	28'-10"	250
* B1	58	#5	STR	11'-2"	676
B2	58	#6	STR	11'-8"	1016
REINFORCING STEEL				LBS.	1266
* EPOXY COATED REINFORCING STEEL				LBS.	926
CLASS AA CONCRETE				C.Y.	16.9

APPROACH SLAB AT EB #2

BAR	NO.	SIZE	TYPE	LENGTH	WEIGHT
* A1	13	#4	STR	28'-10"	250
A2	13	#4	STR	28'-10"	250
* B1	58	#5	STR	11'-2"	676
B2	58	#6	STR	11'-8"	1016
REINFORCING STEEL				LBS.	1266
* EPOXY COATED REINFORCING STEEL				LBS.	926
CLASS AA CONCRETE				C.Y.	16.9

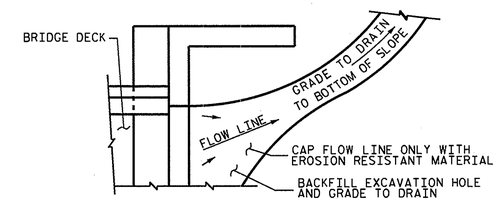

NOTE: IF THE APPROACH SLAB IS NOT CONSTRUCTED IMMEDIATELY AFTER THE BACKFILLING OF THE END BENT EXCAVATION, GRADE TO DRAIN TO THE BOTTOM OF THE SLOPE AND PROVIDE EROSION RESISTANT MATERIAL, SUCH AS FIBERGLASS ROVING OR AS DIRECTED BY THE ENGINEER TO PREVENT SOIL EROSION AND TO PROTECT THE AREA ADJACENT TO THE STRUCTURE. THE CONTRACTOR WILL BE REQUIRED TO REMOVE THESE MATERIALS PRIOR TO CONSTRUCTION OF THE APPROACH SLAB.

TEMPORARY DRAINAGE DETAIL

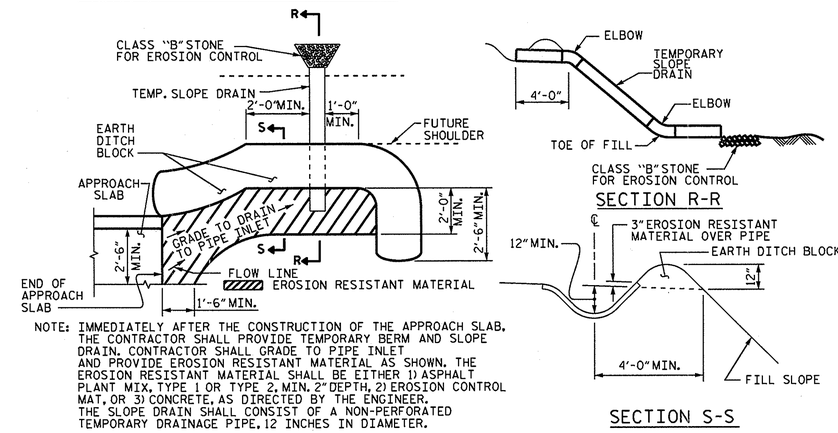

NOTE: IMMEDIATELY AFTER THE CONSTRUCTION OF THE APPROACH SLAB, THE CONTRACTOR SHALL PROVIDE TEMPORARY BERM AND SLOPE DRAIN. CONTRACTOR SHALL GRADE TO PIPE INLET AND PROVIDE EROSION RESISTANT MATERIAL AS SHOWN. THE EROSION RESISTANT MATERIAL SHALL BE EITHER 1) ASPHALT PLANT MIX, TYPE 1 OR TYPE 2, MIN. 2" DEPTH, 2) EROSION CONTROL MAT, OR 3) CONCRETE, AS DIRECTED BY THE ENGINEER. THE SLOPE DRAIN SHALL CONSIST OF A NON-PERFORATED TEMPORARY DRAINAGE PIPE, 12 INCHES IN DIAMETER.

PLAN VIEW

TEMPORARY BERM AND SLOPE DRAIN DETAILS

(TO BE USED WHEN SHOULDER BERM GUTTER IS REQUIRED)

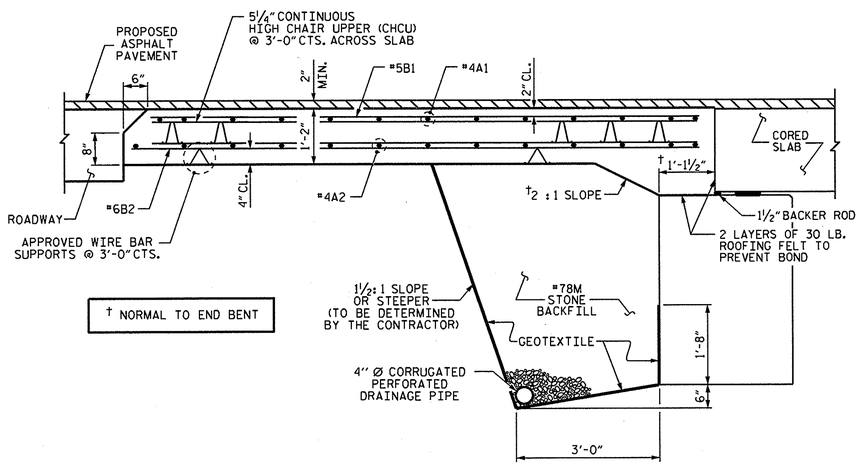

† NORMAL TO END BENT

SECTION THRU SLAB

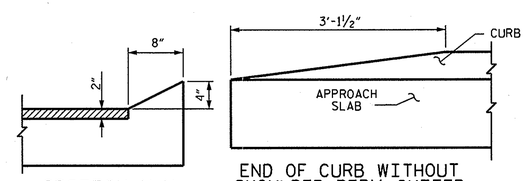

SECTION N-N

END OF CURB WITHOUT SHOULDER BERM GUTTER

CURB DETAILS

SPLICE LENGTHS		
BAR SIZE	EPOXY COATED	UNCOATED
#4	2'-0"	1'-9"
#5	2'-6"	2'-2"
#6	3'-10"	2'-7"

PROJECT NO. BD-5109S

ROWAN COUNTY

STATION: 13+55.00-L-

STATE OF NORTH CAROLINA
DEPARTMENT OF TRANSPORTATION
RALEIGH

STANDARD
BRIDGE APPROACH SLAB
FOR PRESTRESSED CONCRETE
CORED SLAB UNIT
(SUB-REGIONAL TIER)
90° SKEW

REVISIONS							SHEET NO.
NO.	BY:	DATE:	NO.	BY:	DATE:		S-20
1			3				TOTAL SHEETS
2			4				20

NORTH CAROLINA PROFESSIONAL SEAL 10730 ENGINEER D. ANDREW DAVENPORT, JR.
11-8-12

ASSEMBLED BY : D.A. DAVENPORT DATE : 07/30/12
CHECKED BY : G.W. DICKEY DATE : 08/01/12
DRAWN BY : SHS/MAA 5-09
CHECKED BY : BCH 5-09
REV. 12-11 MAA/AAC

08-NOV-2012 07:11
R:\Structures\Plans\BD5109S_SD_CS.dgn
ddavenport

STD. NO. BAS_30_90S

STANDARD NOTES

DESIGN DATA:

SPECIFICATIONS	A.A.S.H.T.O. (CURRENT)
LIVE LOAD	SEE PLANS
IMPACT ALLOWANCE	SEE A.A.S.H.T.O.
STRESS IN EXTREME FIBER OF	
STRUCTURAL STEEL - AASHTO M270 GRADE 36	20,000 LBS. PER SQ. IN.
- AASHTO M270 GRADE 50W	27,000 LBS. PER SQ. IN.
- AASHTO M270 GRADE 50	27,000 LBS. PER SQ. IN.
REINFORCING STEEL IN TENSION	
GRADE 60	24,000 LBS. PER SQ. IN.
CONCRETE IN COMPRESSION	1,200 LBS. PER SQ. IN.
CONCRETE IN SHEAR	SEE A.A.S.H.T.O.
STRUCTURAL TIMBER - TREATED OR	
UNTREATED - EXTREME FIBER STRESS	1,800 LBS. PER SQ. IN.
COMPRESSION PERPENDICULAR TO GRAIN OF TIMBER	375 LBS. PER SQ. IN.
EQUIVALENT FLUID PRESSURE OF EARTH	30 LBS. PER CU. FT. (MINIMUM)

MATERIAL AND WORKMANSHIP:

EXCEPT AS MAY OTHERWISE BE SPECIFIED ON PLANS OR IN THE SPECIAL PROVISIONS, ALL MATERIAL AND WORKMANSHIP SHALL BE IN ACCORDANCE WITH THE 2012 "STANDARD SPECIFICATIONS FOR ROADS AND STRUCTURES" OF THE N. C. DEPARTMENT OF TRANSPORTATION.

STEEL SHEET PILING FOR PERMANENT OR TEMPORARY APPLICATIONS SHALL BE HOT ROLLED.

CONCRETE:

UNLESS OTHERWISE REQUIRED ON PLANS, CLASS A CONCRETE SHALL BE USED FOR ALL PORTIONS OF ALL STRUCTURES WITH THE EXCEPTION THAT: CLASS AA CONCRETE SHALL BE USED IN BRIDGE SUPERSTRUCTURES, ABUTMENT BACKWALLS, AND APPROACH SLABS; AND CLASS B CONCRETE SHALL BE USED FOR SLOPE PROTECTION AND RIP RAP.

CONCRETE CHAMFERS:

UNLESS OTHERWISE NOTED ON THE PLANS, ALL EXPOSED CORNERS ON STRUCTURES SHALL BE CHAMFERED 3/4" WITH THE FOLLOWING EXCEPTIONS: TOP CORNERS OF CURBS MAY BE ROUNDED TO 1-1/2" RADIUS WHICH IS BUILT INTO CURB FORMS; CORNERS OF TRANSVERSE FLOOR EXPANSION JOINTS SHALL BE ROUNDED WITH A 1/4" FINISHING TOOL UNLESS OTHERWISE REQUIRED ON PLANS; AND CORNERS OF EXPANSION JOINTS IN THE ROADWAY FACES AND TOPS OF CURBS AND SIDEWALKS SHALL BE ROUNDED TO A 1/4" RADIUS WITH A FINISHING STONE OR TOOL UNLESS OTHERWISE REQUIRED ON PLANS.

DOWELS:

DOWELS WHEN INDICATED ON PLANS AS FOR CULVERT EXTENSIONS, SHALL BE EMBEDDED AT LEAST 12" INTO THE OLD CONCRETE AND GROUTED INTO PLACE WITH 1:2 CEMENT MORTAR.

ALLOWANCE FOR DEAD LOAD DEFLECTION, SETTLEMENT, ETC. IN CASTING SUPERSTRUCTURES:

BRIDGES SHALL BE BUILT ON THE GRADE OR VERTICAL CURVE SHOWN ON PLANS. SLABS, CURBS AND PARAPETS SHALL CONFORM TO THE GRADE OR CURVE.

ALL DIMENSIONS WHICH ARE GIVEN IN SECTION AND ARE AFFECTED BY DEAD LOAD DEFLECTIONS ARE DIMENSIONS AT CENTER LINE OF BEARING UNLESS OTHERWISE NOTED ON PLANS. IN SETTING FORMS FOR STEEL BEAM BRIDGES AND PRESTRESSED CONCRETE GIRDER BRIDGES, ADJUSTMENTS SHALL BE MADE DUE TO THE DEAD LOAD DEFLECTIONS FOR THE ELEVATIONS SHOWN. WHERE BLOCKS ARE SHOWN OVER BEAMS FOR BUILDING UP TO THE SLAB, THE VERTICAL DIMENSIONS OF THE BLOCKS SHALL BE ADJUSTED BETWEEN BEARINGS TO COMPENSATE FOR DEAD LOAD DEFLECTIONS, VERTICAL CURVE ORDINATE, AND ACTUAL BEAM CAMBER. WHERE BOTTOM OF SLAB IS IN LINE WITH BOTTOM OF TOP FLANGES, DEPTH OF SLAB BETWEEN BEARINGS SHALL BE ADJUSTED TO COMPENSATE FOR DEAD LOAD DEFLECTION, VERTICAL CURVE ORDINATE, AND ACTUAL BEAM CAMBER.

IN SETTING FALSEWORK AND FORMS FOR REINFORCED CONCRETE SPANS, AN ALLOWANCE SHALL BE MADE FOR DEAD LOAD DEFLECTIONS, SETTLEMENT OF FALSEWORK, AND PERMANENT CAMBER WHICH SHALL BE PROVIDED FOR IN ADDITION TO THE ELEVATIONS SHOWN. AFTER REMOVAL OF THE FALSEWORK, THE FINISHED STRUCTURES SHALL CONFORM TO THE PROFILE AND ELEVATIONS SHOWN ON THE PLANS AND CONSTRUCTION ELEVATIONS FURNISHED BY THE ENGINEER.

DETAILED DRAWINGS FOR FALSEWORK OR FORMS FOR BRIDGE SUPERSTRUCTURE AND ANY STRUCTURE OR PARTS OF A STRUCTURE AS NOTED ON THE PLANS SHALL BE SUBMITTED TO THE ENGINEER FOR APPROVAL BEFORE CONSTRUCTION OF THE FALSEWORK OR FORMS IS STARTED.

REINFORCING STEEL:

ALL REINFORCING STEEL SHALL BE DEFORMED. DIMENSIONS RELATIVE TO PLACEMENT OF REINFORCING ARE TO CENTERS OF BARS UNLESS OTHERWISE INDICATED IN THE PLANS. DIMENSIONS ON BAR DETAILS ARE TO CENTERS OF BARS OR ARE OUT TO OUT AS INDICATED ON PLANS.

WIRE BAR SUPPORTS SHALL BE PROVIDED FOR REINFORCING STEEL WHERE INDICATED ON THE PLANS. WHEN BAR SUPPORT PIECES ARE PLACED IN CONTINUOUS LINES, THEY SHALL BE SO PLACED THAT THE ENDS OF THE SUPPORTING WIRES SHALL BE LAPPED TO LOCK LEGS ON ADJOINING PIECES.

STRUCTURAL STEEL:

AT THE CONTRACTOR'S OPTION, HE MAY SUBSTITUTE 7/8" Ø SHEAR STUDS FOR THE 3/4" Ø STUDS SPECIFIED ON THE PLANS. THIS SUBSTITUTION SHALL BE MADE AT THE RATE OF 3 - 7/8" Ø STUDS FOR 4 - 3/4" Ø STUDS, AND STUD SPACING CHANGES SHALL BE MADE AS NECESSARY TO PROVIDE THE SAME EQUIVALENT NUMBER OF 7/8" Ø STUDS ALONG THE BEAM AS SHOWN FOR 3/4" Ø STUDS BASED ON THE RATIO OF 3 - 7/8" Ø STUDS FOR 4 - 3/4" Ø STUDS. STUDS OF THE LENGTH SPECIFIED ON THE PLANS MUST BE PROVIDED. THE MAXIMUM SPACING SHALL BE 2'-0".

EXCEPT AT THE INTERIOR SUPPORTS OF CONTINUOUS BEAMS WHERE THE COVER PLATE IS IN CONTACT WITH BEARING PLATE, THE CONTRACTOR MAY, AT HIS OPTION, SUBSTITUTE FOR THE COVER PLATES DESIGNATED ON THE PLANS COVER PLATES OF THE EQUIVALENT AREA PROVIDED THESE PLATES ARE AT LEAST 5/16" IN THICKNESS AND DO NOT EXCEED A WIDTH EQUAL TO THE FLANGE WIDTH LESS 2" OR A THICKNESS EQUAL TO 2 TIMES THE FLANGE THICKNESS. THE SIZE OF FILLET WELDS SHALL CONFORM TO THE REQUIREMENTS OF THE CURRENT ANSI/AASHTO/AWS "BRIDGE WELDING CODE". ELECTROSLAG WELDING WILL NOT BE PERMITTED.

WITH THE SOLE EXCEPTION OF EDGES AT SURFACES WHICH BEAR ON OTHER SURFACES, ALL SHARP EDGES AND ENDS OF SHAPES AND PLATES SHALL BE SLIGHTLY ROUNDED BY SUITABLE MEANS TO A RADIUS OF APPROXIMATELY 1/16 INCH OR EQUIVALENT FLAT SURFACE AT A SUITABLE ANGLE PRIOR TO PAINTING, GALVANIZING, OR METALLIZING.

HANDRAILS AND POSTS:

METAL STANDARDS AND FACES OF THE CONCRETE END POSTS FOR THE METAL RAIL SHALL BE SET NORMAL TO THE GRADE OF THE CURB, UNLESS OTHERWISE SHOWN ON PLANS. THE METAL RAIL AND TOPS OF CONCRETE POSTS USED WITH THE ALUMINUM RAIL SHALL BE BUILT PARALLEL TO THE GRADE OF THE CURB.

METAL HANDRAILS SHALL BE IN ACCORDANCE WITH THE PLANS. RAILS SHALL BE AS MANUFACTURED FOR BRIDGE RAILING. CASTINGS SHALL BE OF A UNIFORM APPEARANCE. FINS AND OTHER DEFORMATIONS RESULTING FROM CASTING OR OTHERWISE SHALL BE REMOVED IN A MANNER SO THAT A UNIFORM COLORING OF THE COMPLETED CASTING SHALL BE OBTAINED. CASTINGS WITH DISCOLORATIONS OR OF NON-UNIFORM COLORING WILL NOT BE ACCEPTED. CERTIFIED MILL REPORTS ARE REQUIRED FOR METAL RAILS AND POSTS.

SPECIAL NOTES:

GENERALLY, IN CASE OF DISCREPANCY, THIS STANDARD SHEET OF NOTES SHALL GOVERN OVER THE SPECIFICATIONS, BUT THE REMAINDER OF THE PLANS SHALL GOVERN OVER NOTES HEREON, AND SPECIAL PROVISIONS SHALL GOVERN OVER ALL. SEE SPECIFICATIONS ARTICLE 105-4.

ENGLISH

JANUARY, 1990