09/08/99

TIP PROJECT: BD-5109F

CONTRACT: DI00033

See Sheet 1-A For Index of Sheets
See Sheet 1-B For Symbology Sheet

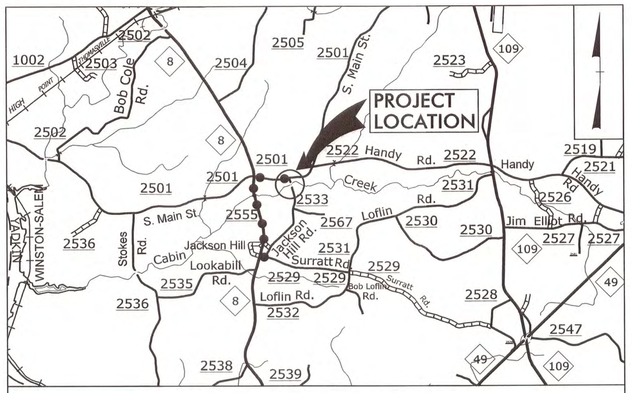

VICINITY MAP

DETOUR ROUTE

STATE OF NORTH CAROLINA
DIVISION OF HIGHWAYS

DAVIDSON COUNTY

STATE	STATE PROJECT REFERENCE NO.	SHEET NO.	TOTAL SHEETS
N.C.	BD-5109F	1	

STATE PROJ. NO.	F. A. PROJ. NO.	DESCRIPTION
45355.1.6	BRZ-2533(1)	PE
45355.2.6	BRZ-2533(1)	R/W, UTILITIES
45355.3.6	BRZ-2533(1)	CONST.

LOCATION: REPLACE EXISTING BRIDGE NO. 282
SR 2533 - JACKSON HILL RD.

TYPE OF WORK: GRADING, DRAINAGE, WIDENING, CORED SLAB BRIDGE AND PAVEMENT MARKINGS

NAD 83
NC GRID

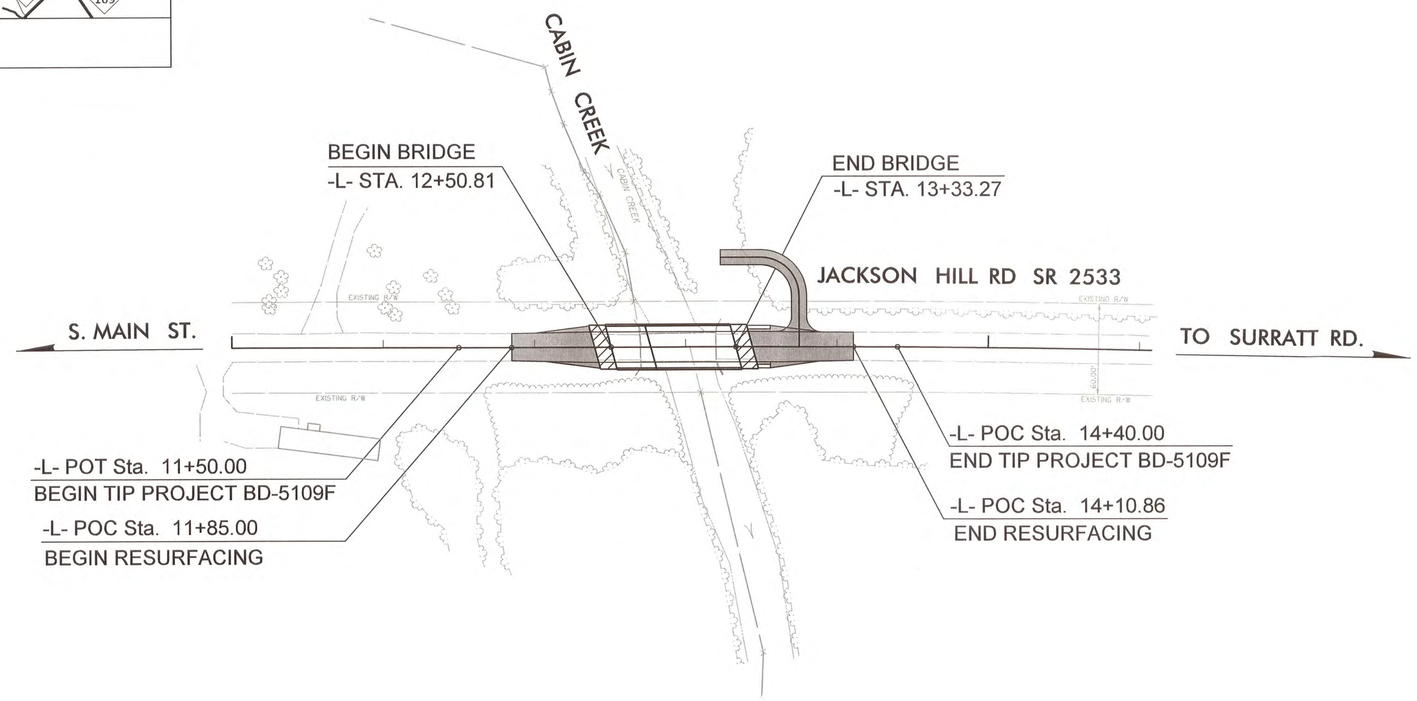

GRAPHIC SCALES

50 25 0 50 100
PLANS

50 25 0 50 100
PROFILE (HORIZONTAL)

10 5 0 10 20
PROFILE (VERTICAL)

DESIGN DATA

ADT 2008 = <970

V = 50 MPH

PROJECT LENGTH

LENGTH ROADWAY TIP PROJECT BD-5109F	=	0.039 MI
LENGTH STRUCTURE TIP PROJECT BD-5109F	=	0.016 MI
TOTAL LENGTH TIP PROJECT BD-5109F	=	0.055 MI

PLANS PREPARED BY:
PARSONS BRINCKERHOFF
434 FAYETTEVILLE STREET
SUITE 1500
RALEIGH, NC 27601
LICENSE NO. F-0165

2006 STANDARD SPECIFICATIONS

RIGHT OF WAY DATE:
JAN. 6, 2012

LETTING DATE:
JULY 24, 2013

NCDOT CONTACT:

PLANS PREPARED FOR:
DIVISION OF HIGHWAYS
1000 Birch Ridge Dr.
Raleigh NC, 27610

TIM HAYES, PE
PROJECT ENGINEER

ERIC MISAK
PROJECT DESIGN ENGINEER

MATTHEW JONES, PE
DIVISION BRIDGE - PROGRAM MANAGER

HYDRAULICS ENGINEER
NORTH CAROLINA PROFESSIONAL SEAL 032312 ENGINEER CHARLES W. HEAFNER
SIGNATURE: 6-19-2013 P.E.

STRUCTURE DESIGN ENGINEER
NORTH CAROLINA PROFESSIONAL SEAL 19563 ENGINEER TIMOTHY SCOTT HAYES
SIGNATURE: 6/20/13 P.E.

DIVISION OF HIGHWAYS
STATE OF NORTH CAROLINA
STATE OF NORTH CAROLINA DEPARTMENT OF TRANSPORTATION
P.E.
STATE HIGHWAY DESIGN ENGINEER

4:25:11 PM
BD-5109F_Rdy_tsn.dgn
6/19/2013

PROJECT REFERENCE NO.	SHEET NO.
BD-5109F	1-A

ROADWAY DESIGN ENGINEER

NORTH CAROLINA PROFESSIONAL SEAL 19563 ENGINEER TIMOTHY SCOTT HAYES

6/20/13

INDEX OF SHEETS

SHEET NUMBER	SHEET
1	TITLE SHEET
1-A	INDEX OF SHEETS, GENERAL NOTES AND LIST OF STANDARD DRAWINGS
1-B	CONVENTIONAL SYMBOLS
1-C	SURVEY CONTROL SHEET
2	PAVEMENT SCHEDULE, TYPICAL SECTIONS, AND WEDGING DETAILS
2-A	STRUCTURE ANCHOR UNITS, TYPE III
3	SUMMARY OF QUANTITIES
3A	SUMMARY OF DRAINAGE QUANTITIES SUMMARY OF GUARDRAIL, EARTHWORK SUMMARY, ASPHALT PAVEMENT REMOVAL SUMMARY AND SHOULDER BERM GUTTER SUMMARY
4	PLAN AND PROFILE SHEET
TCP-1 THRU TCP-2	TRAFFIC CONTROL PLANS
EC-1 THRU EC-2	EROSION CONTROL PLANS
UC-1 THRU UC-2	UTILITY CONSTRUCTION PLANS
X-1 THRU X-2	-L- CROSS-SECTIONS
X-3	-DR1- CROSS-SECTIONS
S-1 THRU S-16 SN	STRUCTURE PLANS STRUCTURE STANDARD NOTES

2012 ROADWAY ENGLISH STANDARD DRAWINGS

The following Roadway Standards as appear in "Roadway Standard Drawings" Highway Design Branch - N. C. Department of Transportation - Raleigh, N. C., Dated January, 2012 are applicable to this project and by reference hereby are considered a part of these plans:

STD.NO.	TITLE
DIVISION 2 - EARTHWORK	
200.03	Method of Clearing - Method III
225.02	Guide for Grading Subgrade - Secondary and Local
225.04	Method of Obtaining Superelevation - Two Lane Pavement
DIVISION 3 - PIPE CULVERTS	
300.01	Method of Pipe Installation
DIVISION 4 - MAJOR STRUCTURES	
422.11	Reinforced Bridge Approach Fills - Sub Regional Tier
DIVISION 5 - SUBGRADE, BASES AND SHOULDERS	
560.01	Method of Shoulder Construction - High Side of Superelevated Curve - Method I
DIVISION 6 - ASPHALT BASES AND PAVEMENTS	
654.01	Pavement Repairs
DIVISION 8 - INCIDENTALS	
815.03	Pipe Underdrain and Blind Drain
840.00	Concrete Base Pad for Drainage Structures
840.29	Frames and Narrow Slot Flat Grates
840.35	Traffic Bearing Grated Drop Inlet - for Cast Iron Double Frame and Grates
840.66	Drainage Structure Steps
862.01	Guardrail Placement
862.02	Guardrail Installation
862.03	Structure Anchor Units
876.02	Guide for Rip Rap at Pipe Outlets

GENERAL NOTES:

2012 SPECIFICATIONS
EFFECTIVE: 01-17-12
REVISED: 11/01/11

GRADING AND SURFACING OR RESURFACING AND WIDENING:

THE GRADE LINES SHOWN DENOTE THE FINISHED ELEVATION OF THE PROPOSED SURFACING AT GRADE POINTS SHOWN ON THE TYPICAL SECTIONS. WHERE NO GRADE LINES ARE SHOWN, THE PROFILES SHOWN DENOTE THE TOP ELEVATION OF TH EXISTING PAVEMENT ALONG THE CENTER LINE OF SURVEY ON WHICH THE PROPOSED RESURFACING WILL BE PLACED. GRADE LINES MAY BE ADJUSTED BY THE ENGINEERIN ORDER TO SECURE A PROPER TIE-IN.

CLEARING:

CLEARING ON THIS PROJECT SHALL BE PERFORMED TO THE LIMITS ESTABLISHED BY METHOD III.

SUPERELEVATION:

ALL CURVES ON THIS PROJECT SHALL BE SUPERELEVATED IN ACCORDANCE WITH STD. NO. 225.04 USING THE RATE OF SUPERELEVATION AND RUNOFF SHOWN ON THE PLANS. SUPERELEVATION IS TO BE REVOLVED ABOUT THE GRADE POINTS SHOWN ON THE TYPICAL SECTIONS.

SHOULDER CONSTRUCTION:

ASPHALT, EARTH, AND CONCRETE SHOULDER CONSTRUCTION ON THE HIGH SIDE OF SUPERELEVATED CURVES SHALL BE IN ACCORDANCE WITH STD. NO. 560.01.

UNDERDRAINS:

UNDERDRAINS SHALL BE CONSTRUCTED IN ACCORDANCE WITH STD. NO. 815.03 AT LOCATIONS DIRECTED BY THE ENGINEER.

GUARDRAIL:

THE GUARDRAIL LOCATIONS SHOWN ON THE PLANS MAY BE ADJUSTED DURING CONSTRUCTION AS DIRECTED BY THE ENGINEER. THE CONTRACTOR SHOULD CONSULT WITH THE ENGINEER PRIOR TO ORDERING GUARDRAIL MATERIAL.

END BENTS:

THE ENGINEER SHALL CHECK THE STRUCTURE END BENT PLANS, DETAILS, AND CROSS-SECTION PRIOR TO SETTING OF THE SLOPE STAKES FOR THE EMBANKMENT OR EXCAVATION APPROACHING A BRIDGE.

UTILITIES:

UTILITY OWNERS ON THIS PROJECT IS Davidson EMC

ANY RELOCATION OF EXISTING UTILITIES WILL BE ACCOMPLISHED BY OTHERS.

RIGHT-OF-WAY MARKERS:

ALL RIGHT-OF-WAY MARKERS ON THIS PROJECT SHALL BE PLACED BY CONTRACT.

8/17/99
BD-5109F_Rdy_1A.dgn
9:04:55 AM
NCDOT Operations On Call\173418E - Division 9 Low Impact Bridges\BD-5109F\BD-5109F\Roadway\Proj\BD-5109F
PARSONS BRINCKERHOFF

04/16/11

PROJECT REFERENCE NO.	SHEET NO.
BD-5109F	1-B

Note: Not to Scale

S.U.E. = Subsurface Utility Engineering

STATE OF NORTH CAROLINA
DIVISION OF HIGHWAYS

CONVENTIONAL PLAN SHEET SYMBOLS

BOUNDARIES AND PROPERTY:

- State Line
- County Line
- Township Line
- City Line
- Reservation Line
- Property Line
- Existing Iron Pin — EIP
- Property Corner
- Property Monument — ECM
- Parcel/Sequence Number — 123
- Existing Fence Line
- Proposed Woven Wire Fence
- Proposed Chain Link Fence
- Proposed Barbed Wire Fence
- Existing Wetland Boundary — WLB
- Proposed Wetland Boundary — WLB
- Existing Endangered Animal Boundary — EAB
- Existing Endangered Plant Boundary — EPB
- Known Soil Contamination: Boundary or Site
- Potential Soil Contamination: Boundary or Site

BUILDINGS AND OTHER CULTURE:

- Gas Pump Vent or U/G Tank Cap
- Sign — S
- Well — W
- Small Mine
- Foundation
- Area Outline
- Cemetery
- Building
- School
- Church
- Dam

HYDROLOGY:

- Stream or Body of Water
- Hydro, Pool or Reservoir
- Jurisdictional Stream — JS
- Buffer Zone 1 — BZ 1
- Buffer Zone 2 — BZ 2
- Flow Arrow
- Disappearing Stream
- Spring
- Wetland
- Proposed Lateral, Tail, Head Ditch — FLOW
- False Sump

RAILROADS:

- Standard Gauge — CSX TRANSPORTATION
- RR Signal Milepost — MILEPOST 35
- Switch — SWITCH
- RR Abandoned
- RR Dismantled

RIGHT OF WAY:

- Baseline Control Point
- Existing Right of Way Marker
- Existing Right of Way Line
- Proposed Right of Way Line — RW
- Proposed Right of Way Line with Iron Pin and Cap Marker — RW
- Proposed Right of Way Line with Concrete or Granite Marker — RW
- Existing Control of Access — CA
- Proposed Control of Access — CA
- Existing Easement Line — E
- Proposed Temporary Construction Easement — E
- Proposed Temporary Drainage Easement — TDE
- Proposed Permanent Drainage Easement — PDE
- Proposed Permanent Drainage / Utility Easement — DUE
- Proposed Permanent Utility Easement — PUE
- Proposed Temporary Utility Easement — TUE
- Proposed Aerial Utility Easement — AUE
- Proposed Permanent Easement with Iron Pin and Cap Marker

ROADS AND RELATED FEATURES:

- Existing Edge of Pavement
- Existing Curb
- Proposed Slope Stakes Cut — C
- Proposed Slope Stakes Fill — F
- Proposed Curb Ramp — CR
- Curb Cut Future Ramp — CCFR
- Existing Metal Guardrail
- Proposed Guardrail
- Existing Cable Guiderail
- Proposed Cable Guiderail
- Equality Symbol
- Pavement Removal

VEGETATION:

- Single Tree
- Single Shrub
- Hedge
- Woods Line
- Orchard
- Vineyard — Vineyard

EXISTING STRUCTURES:

MAJOR:

- Bridge, Tunnel or Box Culvert — CONC
- Bridge Wing Wall, Head Wall and End Wall — CONC WW

MINOR:

- Head and End Wall — CONC HW
- Pipe Culvert
- Footbridge
- Drainage Box: Catch Basin, DI or JB — CB
- Paved Ditch Gutter
- Storm Sewer Manhole — S
- Storm Sewer — S

UTILITIES:

POWER:

- Existing Power Pole
- Proposed Power Pole
- Existing Joint Use Pole
- Proposed Joint Use Pole
- Power Manhole — P
- Power Line Tower
- Power Transformer
- U/G Power Cable Hand Hole
- H-Frame Pole
- Recorded U/G Power Line — P
- Designated U/G Power Line (S.U.E.*) — P

TELEPHONE:

- Existing Telephone Pole
- Proposed Telephone Pole
- Telephone Manhole — T
- Telephone Booth
- Telephone Pedestal — T
- Telephone Cell Tower
- U/G Telephone Cable Hand Hole — HH
- Recorded U/G Telephone Cable — T
- Designated U/G Telephone Cable (S.U.E.*) — T
- Recorded U/G Telephone Conduit — TC
- Designated U/G Telephone Conduit (S.U.E.*) — TC
- Recorded U/G Fiber Optics Cable — T FO
- Designated U/G Fiber Optics Cable (S.U.E.*) — T FO

WATER:

- Water Manhole — W
- Water Meter
- Water Valve
- Water Hydrant
- Recorded U/G Water Line — W
- Designated U/G Water Line (S.U.E.*) — W
- Above Ground Water Line — A/G Water

TV:

- TV Satellite Dish
- TV Pedestal — C
- TV Tower
- U/G TV Cable Hand Hole — HH
- Recorded U/G TV Cable — TV
- Designated U/G TV Cable (S.U.E.*) — TV
- Recorded U/G Fiber Optic Cable — TV FO
- Designated U/G Fiber Optic Cable (S.U.E.*) — TV FO

GAS:

- Gas Valve
- Gas Meter
- Recorded U/G Gas Line — G
- Designated U/G Gas Line (S.U.E.*) — G
- Above Ground Gas Line — A/G Gas

SANITARY SEWER:

- Sanitary Sewer Manhole
- Sanitary Sewer Cleanout
- U/G Sanitary Sewer Line — SS
- Above Ground Sanitary Sewer — A/G Sanitary Sewer
- Recorded SS Forced Main Line — FSS
- Designated SS Forced Main Line (S.U.E.*) — FSS

MISCELLANEOUS:

- Utility Pole
- Utility Pole with Base
- Utility Located Object
- Utility Traffic Signal Box — S
- Utility Unknown U/G Line — ?UTL
- U/G Tank; Water, Gas, Oil
- Underground Storage Tank, Approx. Loc. — UST
- A/G Tank; Water, Gas, Oil
- Geoenvironmental Boring
- U/G Test Hole (S.U.E.*)
- Abandoned According to Utility Records — AATUR
- End of Information — E.O.I.

PROJECT REFERENCE NO.	SHEET NO.
BD-5109F	1C
Location and Surveys	

BD-5109F SURVEY CONTROL SHEET

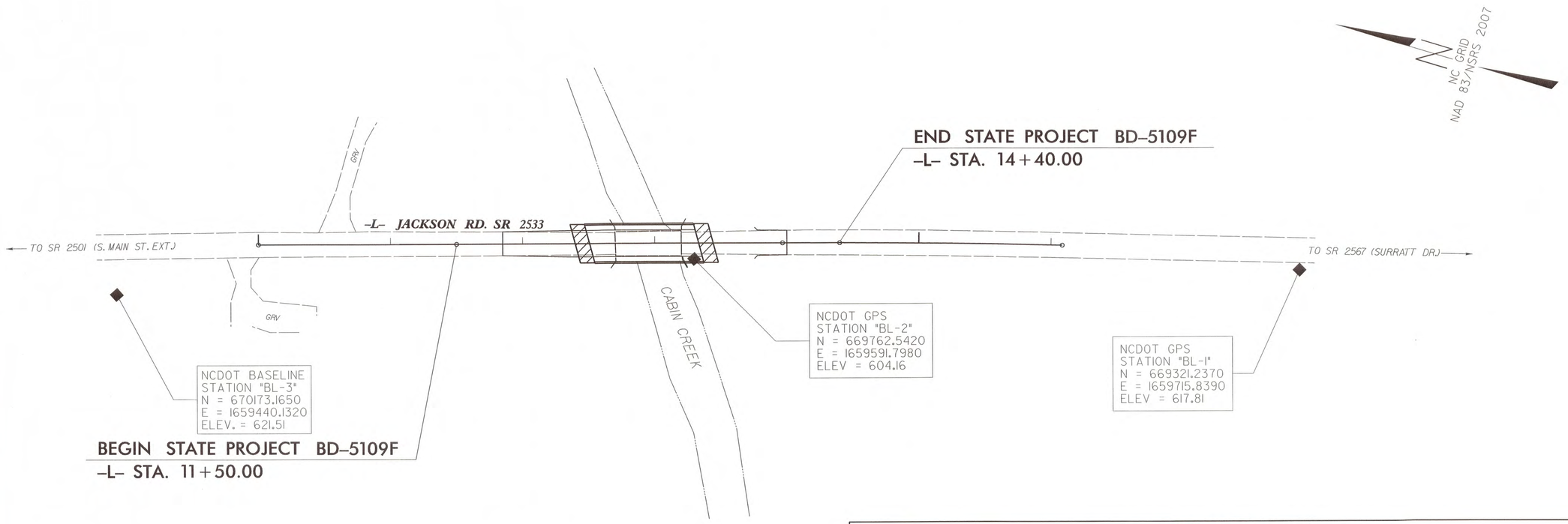

BASELINE DATA

BL

POINT	DESC.	NORTH	EAST	ELEVATION	L STATION	OFFSET
1	BL-1	669321.2370	1659715.8390	617.81	OUTSIDE PROJECT LIMITS	
2	BL-2	669762.5420	1659591.7980	604.16	13+29.69	11.96 RT
3	BL-3	670173.1650	1659440.1320	621.51	OUTSIDE PROJECT LIMITS	

DATUM DESCRIPTION

THE LOCALIZED COORDINATE SYSTEM DEVELOPED FOR THIS PROJECT IS BASED ON THE STATE PLANE COORDINATES ESTABLISHED BY NCDOT FOR MONUMENT "BL-2"
WITH NAD 83/NSRS 2007 STATE PLANE GRID COORDINATES OF
NORTHING: 669762.542(ft) EASTING: 1659591.798(ft)
ELEVATION: 604.16(ft)
THE AVERAGE COMBINED GRID FACTOR USED ON THIS PROJECT (GROUND TO GRID) IS: 0.99986458
THE N.C. LAMBERT GRID BEARING AND LOCALIZED HORIZONTAL GROUND DISTANCE FROM "BL-2" TO -L- STATION 10+00.00 IS
N 14° 50′ 45.3″ W 329.90 (ft)
ALL LINEAR DIMENSIONS ARE LOCALIZED HORIZONTAL DISTANCES
VERTICAL DATUM USED IS NAVD 88

NOTES

1. *THE CONTROL DATA FOR THIS PROJECT CAN BE FOUND ELECTRONICALLY BY SELECTING PROJECT CONTROL DATA AT:*
HTTP:/WWW.DOH.DOT.STATE.NC.US/PRECONSTRUCT/HIGHWAY/LOCATION/PROJECT/

THE FILES TO BE FOUND ARE AS FOLLOWS:
bd5109f_ls_control.txt

SITE CALIBRATION INFORMATION HAS NOT BEEN PROVIDED FOR THIS PROJECT. IF FURTHER INFORMATION IS NEEDED, PLEASE CONTACT THE LOCATION AND SURVEYS UNIT.

◆ *INDICATES GEODETIC CONTROL MONUMENTS USED OR SET FOR HORIZONTAL PROJECT CONTROL BY THE NCDOT LOCATION AND SURVEYS UNIT.*
PROJECT CONTROL ESTABLISHED USING GLOBAL POSITIONING SYSTEM.
NETWORK ESTABLISHED FROM NGS ONLINE POSITIONING SERVICE (OPUS)

NOTE: DRAWING NOT TO SCALE

12/01/2005

$$$$$$SYSTIME$$$$$$
$$$$$$USERNAME$$$$$$

PROJECT REFERENCE NO.	SHEET NO.
BD-5109F	2
ROADWAY DESIGN ENGINEER	PAVEMENT DESIGN ENGINEER

NORTH CAROLINA PROFESSIONAL SEAL 19563 ENGINEER TIMOTHY SCOTT HAYES 6/20/13

PLANS PREPARED BY:
PARSONS BRINCKERHOFF
434 FAYETTEVILLE STREET
SUITE 1500
RALEIGH, NC 27601

PAVEMENT SCHEDULE

C1	PROPOSED APPROX. 1½" ASPHALT CONCRETE SURFACE COURSE, TYPE S9.5B, AT AN AVERAGE RATE OF 168 LBS. PER SQ. YARD.
C2	PROPOSED VARIABLE DEPTH ASPHALT CONCRETE SURFACE COURSE, TYPE S9.5B, AT AN AVERAGE RATE OF 112 LBS. PER SQ. YARD. PER 1" DEPTH, TO BE PLACED IN LAYERS NOT LESS THAN 1½" OR GREATER THAN 2" IN DEPTH.
D2	PROPOSED VARIABLE DEPTH ASPHALT CONCRETE INTERMEDIATE COURSE, TYPE I19.0B, AT AN AVERAGE RATE OF 114 LBS. PER SQ. YARD. PER 1" DEPTH, TO BE PLACED IN LAYERS NOT LESS THAN 2 1/2" OR GREATER THAN 4" IN DEPTH.
E1	PROPOSED APPROXIMATE 5½" ASPHALT CONCRETE BASE COURSE, TYPE B25.0B, AT AN AVERAGE RATE OF 627 LBS. PER SQ. YARD.
E2	PROPOSED VARIABLE DEPTH ASPHALT CONCRETE BASE COURSE, TYPE B25.0B, AT AN AVERAGE RATE OF 114 LBS. PER SQ. YARD. PER 1" DEPTH, TO BE PLACED IN LAYERS NOT LESS THAN 3" OR GREATER THAN 5 ½" IN DEPTH.
J	4" ABC
RI	SHOULDER BERM GUTTER
T	EARTH MATERIAL
U	EXISTING PAVEMENT
W	WEDGING DETAIL

NOTE: ALL PAVEMENT EDGE SLOPES ARE 1:1 UNLESS OTHERWISE SHOWN.

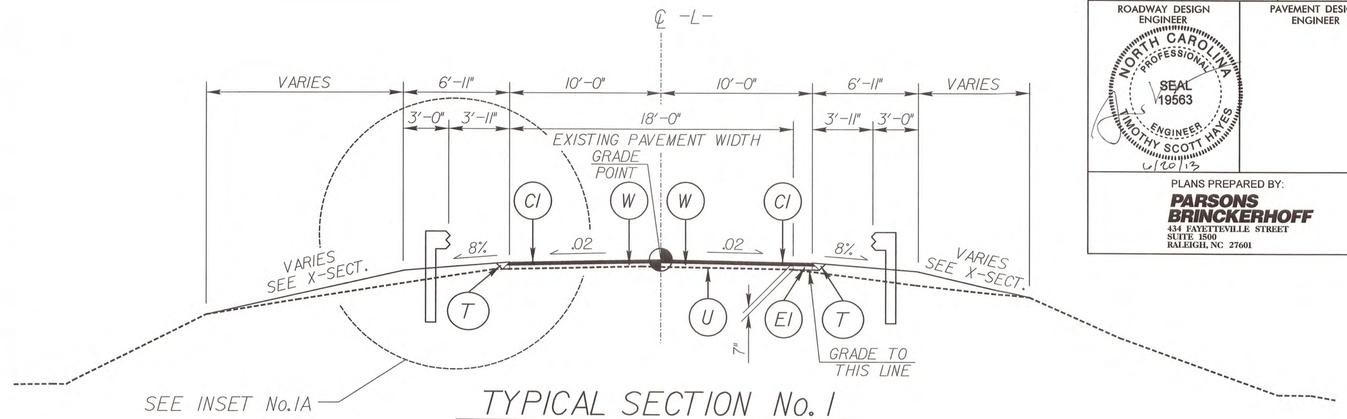

TYPICAL SECTION No. 1

USE TYPICAL SECTION No.1 AS FOLLOWS:

TRANSITION FROM EXISTING TO T.S.NO.1 FROM -L- STA.11+85.00 TO -L- STA.12+35.00
FROM -L- STA.12+35.00 TO -L- STA.12+50.81 (BEGIN BRIDGE)
TRANSITION FROM T.S.NO.2 TO EXISTING FROM -L- STA.13+75.60 TO -L- STA.14+10.86

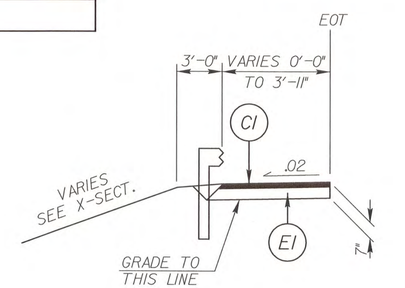

INSET No.1A

(SEE PLANS FOR PAVED SHOULDER LOCATION)

USE INSET No.1A IN CONJUCTION w/TYPICAL SECTION No.1 AS FOLLOWS:

FROM -L- STA.12+00.21 (LT.) TO -L- STA.12+36.12 (LT.)
FROM -L- STA.12+07.30 (RT.) TO -L- STA.12+43.58 (RT.)
FROM -L- STA.13+75.60 (RT.& LT.) TO -L- STA.14+10.86 (RT.& LT.)

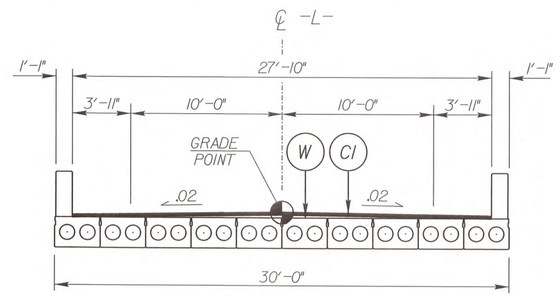

TYPICAL SECTION No. 2

USE TYPICAL SECTION No.2 AS FOLLOWS:

FROM -L- STA.12+50.81 (BEGIN BRIDGE) TO -L- STA.13+33.27 (END BRIDGE)

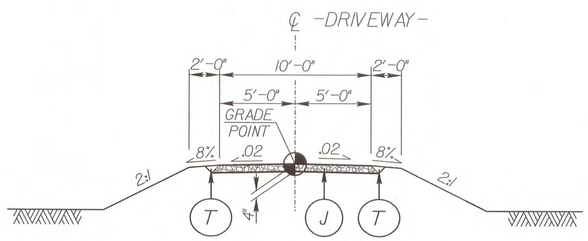

TYPICAL SECTION No.4

USE TYPICAL SECTION No.4 AS FOLLOWS:

FROM -DRI- STA.10+10.00 TO -DRI- STA.11+00.00

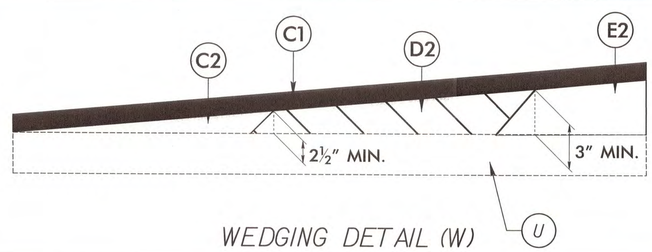

WEDGING DETAIL (W)

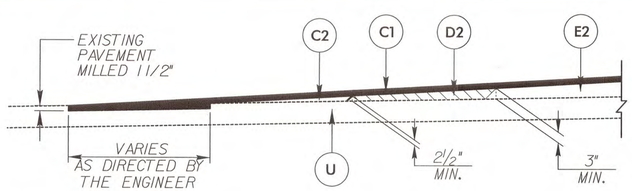

MILLING DETAIL FOR PROFILE CONNECTIONS

TYING PROPOSED PAVEMENTS TO EXISTING PAVEMENTS

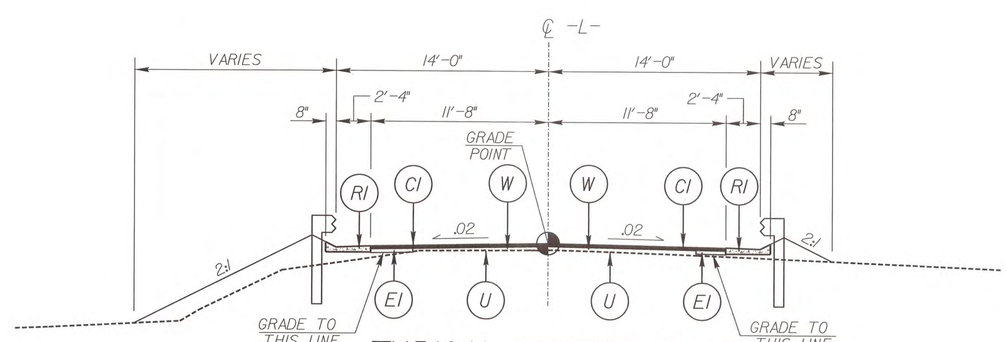

TYPICAL SECTION No. 3

USE TYPICAL SECTION No.3 AS FOLLOWS:

FROM -L- STA.13+33.27 (END BRIDGE) TO -L- STA.13+75.60

6/2/99
2:31:37 PM
NCDOT Operations On Call\173418E - Division 9 Low Impact Bridges\BD-5109F\BD-5109F\Roadway\Proj\BD-5109F_Rdy_typ.dgn
PARSONS BRINCKERHOFF

STATE OF NORTH CAROLINA
DEPT. OF TRANSPORTATION
DIVISION OF HIGHWAYS
RALEIGH, N.C.

ENGLISH DETAIL DRAWING FOR
STRUCTURE ANCHOR UNITS
GUARDRAIL ANCHOR UNIT, TYPE III FOR ATTACHMENT TO
RAIL ON BRIDGE - SUB REGIONAL TIER

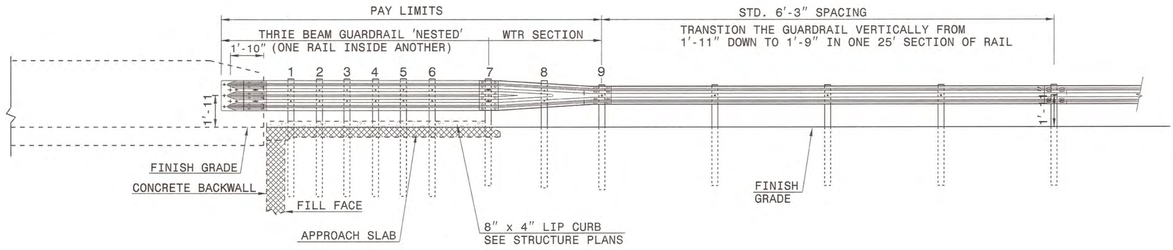

ELEVATION

NOTE:
**POST NOT REQUIRED FOR SKEW ANGLES GREATER THAN 150° OR LESS THAN 30° UNLESS OTHERWISE DIRECTED BY THE ENGINEER.
*THE DISTANCE FROM END OF BRIDGE RAIL TO CENTER LINE OF THE FIRST POST SHOULD BE 11½" IF CONCRETE BACKWALL IS NOT PRESENT.
-SHOULDER BERM GUTTER MUST BE INSTALLED TO THE LIMITS 8" x 4" LIP CURB IS SHOWN IF ANCHOR UNIT IS NOT ADJACENT TO AN APPROACH SLAB.
-MEASURE GUARDRAIL HEIGHT FROM THE TOP OF ADJACENT SURFACE (SHOULDER, BERM, OR GUTTER).
-LAP JOINTS IN THE DIRECTION OF TRAFFIC FLOW.
-SEE SHEET 5 FOR POST SECTIONS 1 THRU 9.

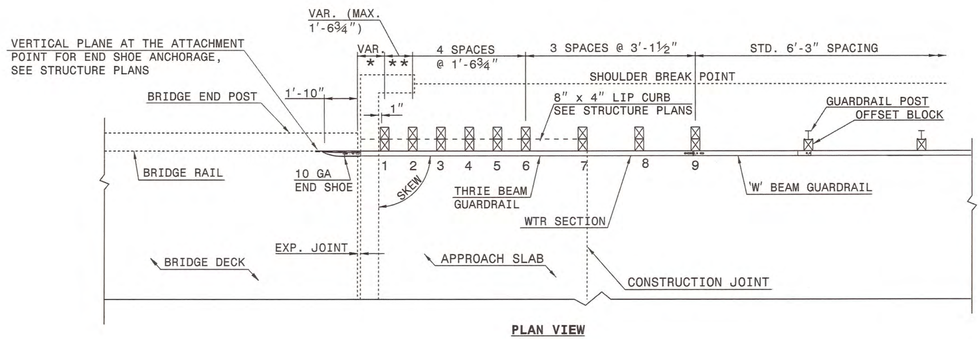

PLAN VIEW

GUARDRAIL ANCHOR UNIT, TYPE III FOR ATTACHMENT TO RAIL ON BRIDGE - SUB REGIONAL TIER

SHEET 2 OF 7
862d03

STATE OF NORTH CAROLINA
DEPT. OF TRANSPORTATION
DIVISION OF HIGHWAYS
RALEIGH, N.C.

ENGLISH DETAIL DRAWING FOR
STRUCTURE ANCHOR UNITS
GUARDRAIL ANCHOR UNIT, TYPE III FOR ATTACHMENT TO
RAIL ON BRIDGE - SUB REGIONAL TIER

SHEET 2 OF 7
862d03

STATE OF NORTH CAROLINA
DEPT. OF TRANSPORTATION
DIVISION OF HIGHWAYS
RALEIGH, N.C.

ENGLISH DETAIL DRAWING FOR
STRUCTURE ANCHOR UNITS
GUARDRAIL ANCHOR UNIT, TYPE III

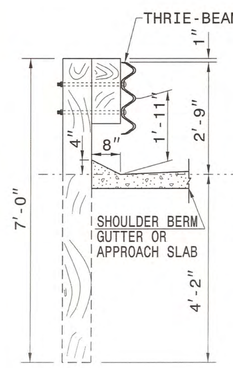

SECTION OF THRIE BEAM POSTS 1 THRU 6

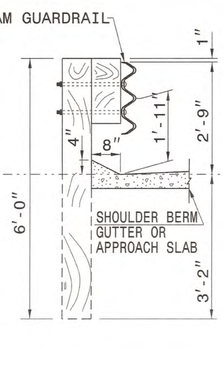

SECTION OF THRIE BEAM POST 7

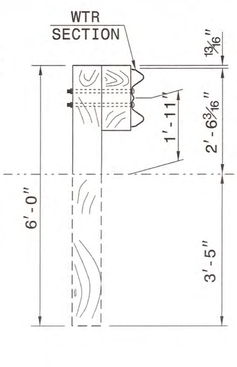

SECTION OF WTR BEAM POST 8

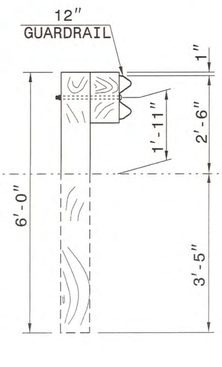

SECTION OF 'W' BEAM POST 9

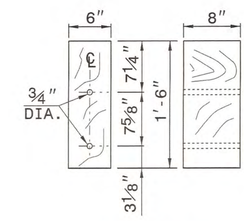

THRIE BEAM OFFSET BLOCK

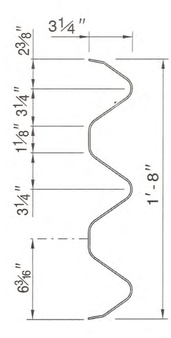

THRIE-BEAM SECTION

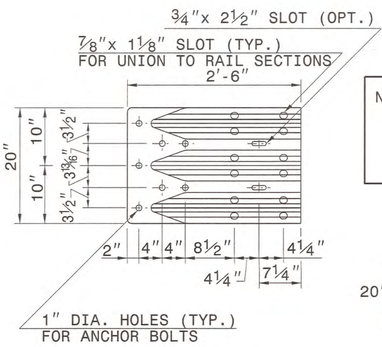

END SHOE

NOTE: THE MID POST AND OFFSET BLOCK OF THE WTR SECTION WILL REQUIRE SPECIAL BOLT HOLE DRILLING IN THE THRIE BEAM OFFSET BLOCK AND LINE POST.

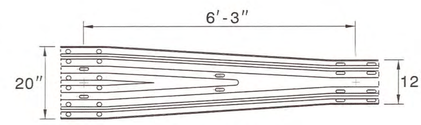

WTR SECTION
ELEVATION VIEW

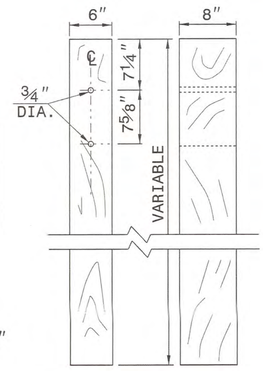

THRIE BEAM LINE POST

SHEET 3 OF 7
862d03

STATE OF NORTH CAROLINA
DEPT. OF TRANSPORTATION
DIVISION OF HIGHWAYS
RALEIGH, N.C.

ENGLISH DETAIL DRAWING FOR
STRUCTURE ANCHOR UNITS
GUARDRAIL ANCHOR UNIT, TYPE III

SHEET 3 OF 7
862d03

PROJECT REFERENCE NO. BD-5109F
SHEET NO. 2-A

PROJECT REFERENCE NO.	SHEET NO.
BD-5109F	3

ROADWAY DESIGN ENGINEER
NORTH CAROLINA PROFESSIONAL SEAL 19563 ENGINEER TIMOTHY SCOTT HAYES
6/20/13

ITEM	SECT	QUANTITY	UNIT	ITEM DESCRIPTION
0000100000-N	800	1	LS	MOBILIZATION
0000400000-N	801	1	LS	CONSTRUCTION SURVEYING
0030000000-N	SP	1	LS	BRIDGE APPROACH FILL - SUB REGIONAL TIER STATION 12+92.04
0043000000-N	226	1	LS	GRADING
0318000000-E	300	10	TON	FOUNDATION CONDITIONING MATERIAL, MINOR STRUCTURES
0320000000-E	300	30	SY	FOUNDATION CONDITIONING GEOTEXTILE
0335200000-E	305	16	LF	15" DRAINAGE PIPE
0335300000-E	305	32	LF	18" DRAINAGE PIPE
0366000000-E	310	24	LF	15" RC PIPE CULVERTS, CLASS III
0995000000-E	340	30	LF	PIPE REMOVAL
1121000000-E	520	30	TON	AGGREGATE BASE COURSE
1297000000-E	607	210	SY	MILLING ASPHALT PAVEMENT,1.5" DEPTH
1489000000-E	610	121	TON	ASPHALT CONC BASE COURSE, TYPE B25.0B
1498000000-E	610	40	TON	ASPHALT CONC INTERMEDIATE COURSE, TYPE I19.0B
1519000000-E	610	70	TON	ASPHALT CONC SURFACE COURSE, TYPE S9.5B
1575000000-E	620	15	TON	ASPHALT BINDER FOR PLANT MIX
2000000000-N	806	10	EA	RIGHT OF WAY MARKERS
2286000000-N	840	2	EA	MASONRY DRAINAGE STRUCTURES
2367000000-N	840	2	EA	FRAME WITH TWO GRATES, STD 840.29
2556000000-E	846	25	LF	SHOULDER BERM GUTTER
3030000000-E	862	12.5	LF	STEEL BM GUARDRAIL
3045000000-E	862	31.5	LF	STEEL BM GUARDRAIL, SHOP CURVED
3150000000-N	862	5	EA	ADDITIONAL GUARDRAIL POSTS
3195000000-N	862	1	EA	GUARDRAIL ANCHOR UNITS, TYPE AT-1
3215000000-N	862	4	EA	GUARDRAIL ANCHOR UNITS, TYPE III
3270000000-N	SP	3	EA	GUARDRAIL ANCHOR UNITS, TYPE 350
3649000000-E	876	1	TON	RIP RAP, CLASS B
3656000000-E	876	40	SY	GEOTEXTILE FOR DRAINAGE
4400000000-E	1110	112	SF	WORK ZONE SIGNS (STATIONARY)
4410000000-E	1110	94	SF	WORK ZONE SIGNS (BARRICADE MOUNTED)
4445000000-E	1145	64	LF	BARRICADES (TYPE III)
4810000000-E	1205	2610	LF	PAINT PAVEMENT MARKING LINES (4")
5325600000-E	1510	164	LF	6" WATER LINE
6000000000-E	1605	965	LF	TEMPORARY SILT FENCE
6009000000-E	1610	35	TON	STONE FOR EROSION CONTROL, CLASS B
6012000000-E	1610	50	TON	SEDIMENT CONTROL STONE
6015000000-E	1615	0.5	ACR	TEMPORARY MULCHING
6018000000-E	1620	50	LB	SEED FOR TEMPORARY SEEDING
6021000000-E	1620	0.25	TON	FERTILIZER FOR TEMPORARY SEEDING
6024000000-E	1622	200	LF	TEMPORARY SLOPE DRAINS
6029000000-E	SP	100	LF	SAFETY FENCE
6030000000-E	1630	20	CY	SILT EXCAVATION
6036000000-E	1631	1400	SY	MATTING FOR EROSION CONTROL
6037000000-E	SP	275	SY	COIR FIBER MAT
6042000000-E	1632	180	LF	1/4" HARDWARE CLOTH
6070000000-N	1639	5	EA	SPECIAL STILLING BASINS
6071010000-E	SP	80	LF	WATTLE
6084000000-E	1660	0.6	ACR	SEEDING & MULCHING
6111000000-E	SP	60	LF	IMPERVIOUS DIKE
6117000000-N	1675	10	EA	RESPONSE FOR EROSION CONTROL
8017000000-N	SP	1	LS	CONSTRUCTION, MAINTENANCE, & REMOVAL OF TEMP STRUCTURE AT STATION 12+92.04
8021000000-N	SP	1	LS	REMOVAL OF EXISTING STRUCTURE AT STATION 12+92.04
8096000000-E	450	45	LF	PILE EXCAVATION IN SOIL
8097000000-E	450	49	LF	PILE EXCAVATION NOT IN SOIL
8121000000-N	412	1	LS	UNCLASSIFIED STRUCTURE EXCAVATION AT STATION 12+92.04
8182000000-E	420	37.6	CY	CLASS A CONCRETE (BRIDGE)
8210000000-N	422	1	LS	BRIDGE APPROACH SLABS, STATION 12+92.04
8217000000-E	425	6180	LB	REINFORCING STEEL (BRIDGE)
8364000000-E	450	135	LF	HP12X53 STEEL PILES
8384200000-E	450	150	LF	HP14X73 GALVANIZED STEEL PILES
8391000000-N	450	10	EA	STEEL PILE POINTS
8505000000-E	460	160.5	LF	VERTICAL CONCRETE BARRIER RAIL
8608000000-E	876	339	TON	RIP RAP CLASS II (2'-0" THICK)
8622000000-E	876	342	SY	GEOTEXTILE FOR DRAINAGE
8657000000-N	430	1	LS	ELASTOMERIC BEARINGS
8762000000-E	430	800	LF	3'-0" X 1'-9" PRESTRESSED CONC CORED SLABS

8/17/99
11:52:22 AM NCDOT Operations On Call\173418E - Division 9 Low Impact Bridges\BD-5109F\BD-5109F\Roadway\Proj\BD-5109F_Rdg_3.dgn
PARSONS BRINCKERHOFF

STATE OF NORTH CAROLINA
DIVISION OF HIGHWAYS

PROJECT REFERENCE NO.	SHEET NO.
BD-5109F	3-A

LIST OF PIPES, ENDWALLS, ETC. (FOR PIPES 48" & UNDER)

| STATION / SIZE / THICKNESS OR GAUGE | LOCATION (LT,RT, OR CL) | STRUCTURE NO. FROM | STRUCTURE NO. TO | TOP ELEVATION | INVERT ELEVATION | INVERT ELEVATION | SLOPE CRITICAL | DRAINAGE PIPE (RCP, CSP, CAAP, HDPE, or PVC) 12" | 15" | 18" | 24" | 30" | 36" | 42" | 48" | C.S. PIPE (UNLESS NOTED OTHRWISE) 12" | 15" | 18" | 24" | | 30" | | 36" | | 42" | | 48" | | CLASS III R.C. PIPE (UNLESS OTHERWISE NOTED) 12" | 15" | 18" | 24" | 30" | 36" | 42" | 48" | 15" SIDE DRAIN PIPE | 18" SIDE DRAIN PIPE | 24" SIDE DRAIN PIPE | ENDWALLS STD. 838.01, STD. 838.11 OR STD. 838.80 (UNLESS NOTED OTHERWISE) CU. YDS. R.C.P. | C.S.P. | QUANTITIES FOR DRAINAGE STRUCTURES * TOTAL L.F. FOR PAY QUANTITY SHALL BE COL. "A" + (1.3 X COL. "B") LIN. FT. A | B | PER EACH (0' THRU 5.0') | 5.0' THRU 10.0' | 10.0' AND ABOVE | C.B. STD. 840.01 OR STD. 840.02 | FRAME, GRATES AND HOOD STANDARD 840.03 TYPE OF GRATE E | F | G | D.I. STD. 840.14 OR STD. 840.15 | D.I. FRAME & GRATE STD. 840.16 | G.D.I. TYPE "A" STD. 840.17 OR 840.26 | G.D.I. TYPE "B" STD. 840.18 OR 840.27 | G.D.I. TYPE "D" STD. 840.19 OR 840.28 | G.D.I. FRAME WITH TWO GRATES STD. 840.22 | G.D.I. FRAME WITH GRATE STD. 840.22 | G.D.I. (N.S.) FRAME WITH GRATE STD. 840.29 | G.D.I. (N.S.) FRAME WITH TWO GRATES STD. 840.29 | J.B. STD. 840.31 OR 840.32 | T.B.D.I. STD. 840.35 | CORR. STEEL ELBOWS NO. & SIZE | CONC. COLLARS CL. "B" C.Y. STD. 840.72 | CONC. & BRICK PIPE PLUG, C.Y. STD. 840.71 | PIPE REMOVAL LIN.FT. | REMARKS |
|---|---|---

PROJECT REFERENCE NO.	SHEET NO.
BD-5109F	4
R/W SHEET NO.	

ROADWAY DESIGN ENGINEER: NORTH CAROLINA PROFESSIONAL SEAL 19563 ENGINEER TIMOTHY SCOTT HAYES 6/19/13

HYDRAULICS ENGINEER: NORTH CAROLINA PROFESSIONAL SEAL 032312 ENGINEER CHARLES W. HEAFNER 6-19-2013

PLANS PREPARED BY:
PARSONS BRINCKERHOFF
434 FAYETTEVILLE STREET
SUITE 1500
RALEIGH, NC 27601
LICENSE NO. F-0165

DAVIDSON COUNTY
LOW IMPACT BRIDGE

STRUCTURE 280282
LS 09-10-015
WBS 42608.1.ST9
TIP BD-5109F

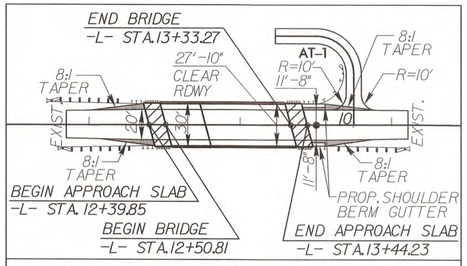

SKETCH SHOWING DIMENSION OF PAVEMENT AND SHOULDERS IN RELATION TO PROPOSED BRIDGE WIDTH

PAVED SHLD.

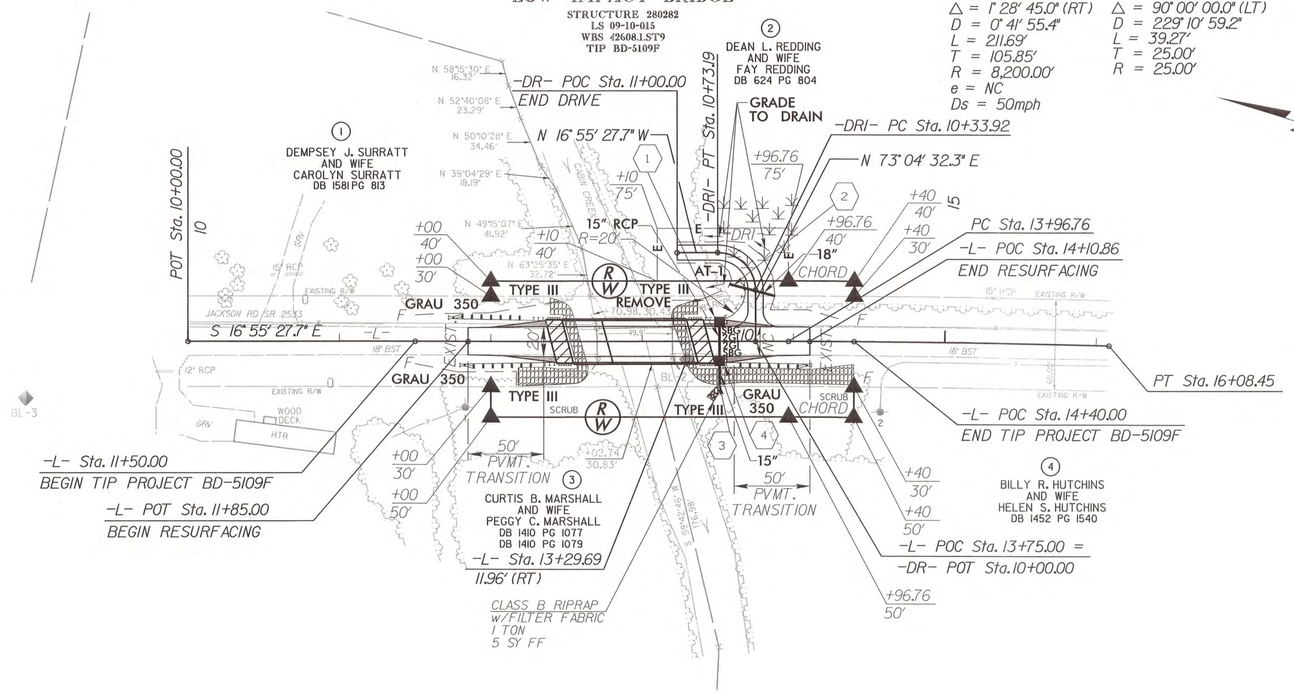

-L- CURVE DATA

PI Sta 15+02.61	PI Sta 10+58.92
Δ = 1° 28' 45.0" (RT)	Δ = 90° 00' 00.0" (LT)
D = 0° 41' 55.4"	D = 229° 10' 59.2"
L = 211.69'	L = 39.27'
T = 105.85'	T = 25.00'
R = 8,200.00'	R = 25.00'
e = NC	
Ds = 50mph	

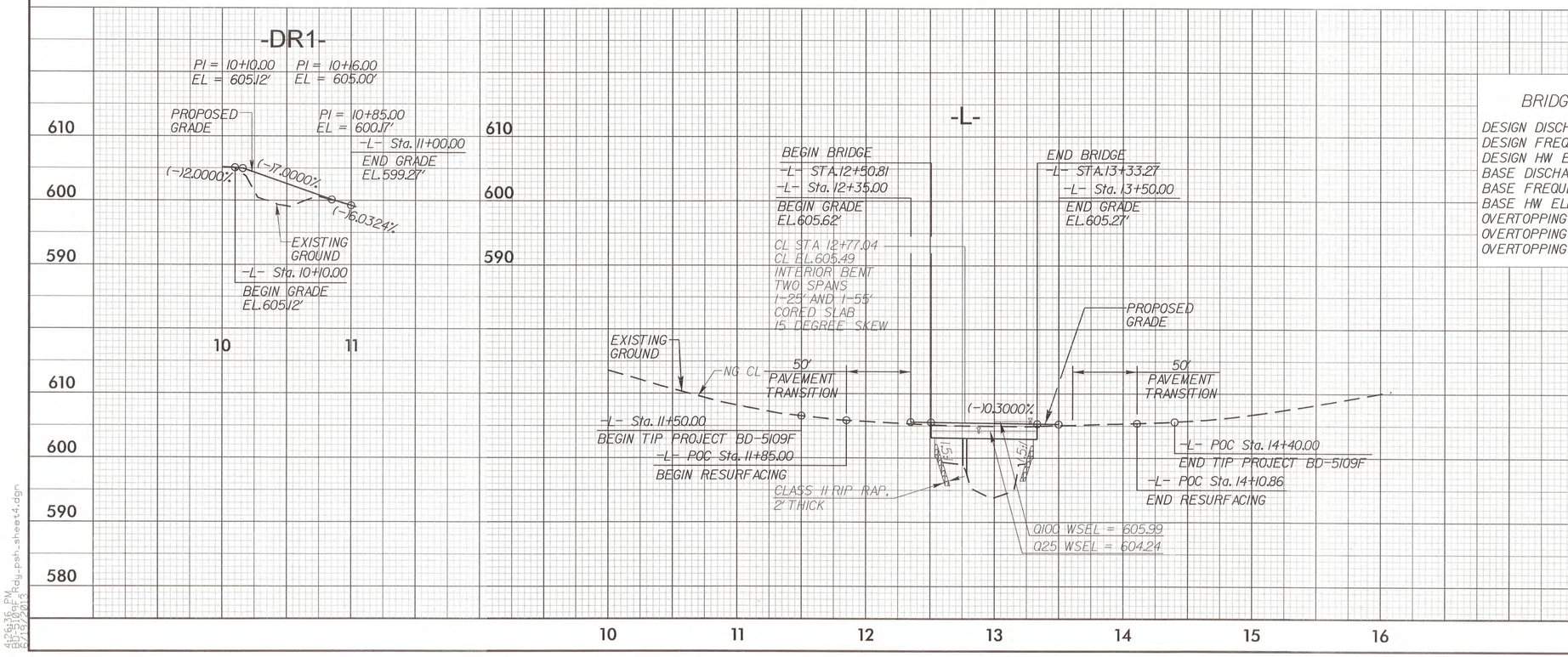

BRIDGE HYDRAULIC DATA

DESIGN DISCHARGE	= 2540	CFS
DESIGN FREQUENCY	= 25	YRS
DESIGN HW ELEVATION	= 604.24	FT
BASE DISCHARGE	= 3701	CFS
BASE FREQUENCY	= 100	YRS
BASE HW ELEVATION	= 605.99	FT
OVERTOPPING DISCHARGE	= 3300	CFS
OVERTOPPING FREQUENCY	= <100	YRS
OVERTOPPING ELEVATION	= 605.23	FT

8/17/99

426636 PM
BD-5109F_Rdy_psh_sheet4.dgn
6/19/2013

STATE PROJECT REFERENCE NO.	SHEET NO.
BD-5109F	TCP-1

STATE OF NORTH CAROLINA
DIVISION OF HIGHWAYS

PLAN FOR PROPOSED TRAFFIC CONTROL, MARKING & DELINEATION

DAVIDSON COUNTY

BD-5109F

TIP PROJECT:

ROADWAY STANDARD DRAWINGS

THE FOLLOWING ROADWAY STANDARDS AS APPEAR IN "ROADWAY STANDARD DRAWINGS" - PROJECT SERVICES UNIT - N.C. DEPARTMENT OF TRANSPORTATION - RALEIGH, N.C., DATED JANUARY 2012 ARE APPLICABLE TO THIS PROJECT AND BY REFERENCE HEREBY ARE CONSIDERED A PART OF THESE PLANS:

STD. NO.	TITLE
1101.03	TEMPORARY ROAD CLOSURES
1101.11	TRAFFIC CONTROL DESIGN TABLES
1110.01	STATIONARY WORK ZONE SIGNS
1145.01	BARRICADES
1205.01	PAVEMENT MARKINGS - LINE TYPES & OFFSETS
1205.02	PAVEMENT MARKINGS - 2 LANE & MULTILANE ROADWAYS
1205.12	PAVEMENT MARKINGS - BRIDGES
1261.01	GUARDRAIL & BARRIER DELINEATOR SPACING
1261.02	GUARDRAIL & BARRIER DELINEATOR TYPE
1262.01	GUARDRAIL END DELINEATION

INDEX OF SHEETS

SHEET NO.	TITLE
TCP-1	LIST OF APPLICABLE ROADWAY STANDARD DRAWINGS, LEGEND AND INDEX OF SHEETS
TCP-2	GENERAL NOTES, PHASING AND DETOUR SIGNING

LEGEND

GENERAL

- DIRECTION OF TRAFFIC FLOW
- NORTH ARROW
- PROPOSED PVMT. -------- EXIST. PVMT.
- WORK AREA
- MILL AND WEDGE
- REMOVAL OF EXISTING PAVEMENT

TRAFFIC CONTROL DEVICES

- TYPE I BARRICADE
- TYPE II BARRICADE
- TYPE III BARRICADE
- CONE
- DRUM
- SKINNY DRUM
- FLASHING ARROW PANEL (TYPE C)
- STATIONARY SIGN
- PORTABLE SIGN
- STATIONARY OR PORTABLE SIGN
- CRASH CUSHION
- CHANGEABLE MESSAGE SIGN
- TRUCK MOUNTED IMPACT ATTENUATOR (TMIA)
- POLICE
- FLAGGER

PAVEMENT MARKINGS

- CRYSTAL/CRYSTAL PAVEMENT MARKER
- YELLOW/YELLOW PAVEMENT MARKER
- CRYSTAL/RED PAVEMENT MARKER
- PAVEMENT MARKING SYMBOLS

APPROVED:
DATE: 6/20/13

SEAL

NORTH CAROLINA PROFESSIONAL SEAL 19563 ENGINEER TIMOTHY SCOTT HAYES

PARSONS BRINCKERHOFF
434 FAYETTEVILLE STREET
SUITE 1500
RALEIGH, NC 27601
LICENSE NO. F-0165

TIM HAYES, PE — PROJECT ENGINEER
ERIC MISAK — PROJECT DESIGN

2:27:08 PM
5109F_TC_TCP_TSH.dgn
6/5/2013

PROJ. REFERENCE NO.	SHEET NO.
BD-5109F	TCP-2

PARSONS BRINCKERHOFF
434 FAYETTEVILLE STREET
SUITE 1500
RALEIGH, NC 27601
LICENSE NO. F-0165

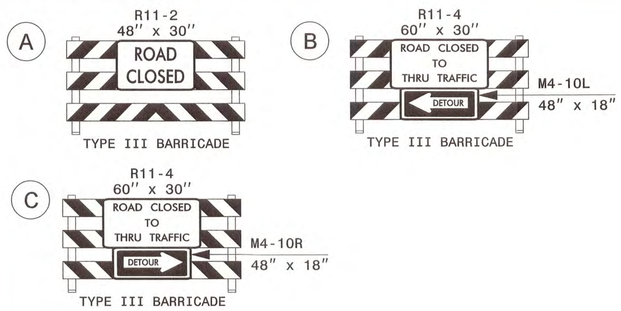

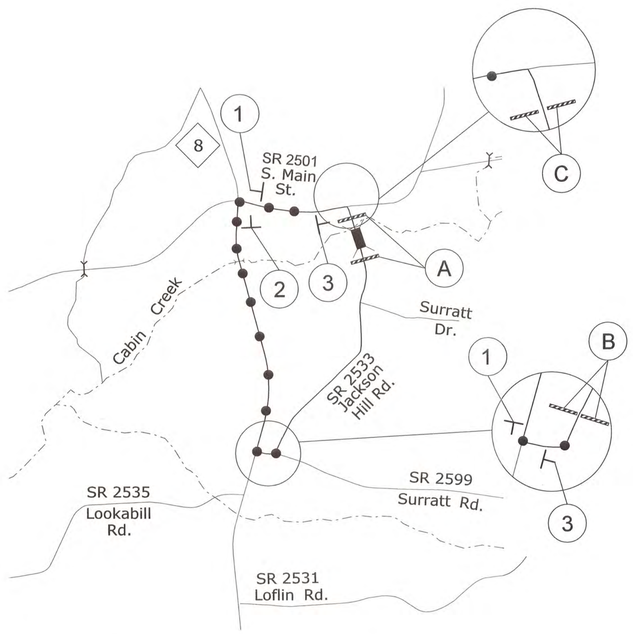

PROPOSED DETOUR	
DETOUR ROUTE	
DETOUR LENGTH	2.7 MILES

1 DETOUR M4-8 24" X 12"

3 END DETOUR M4-8 A 24" X 18"

M6-1 L 21" X 15"

2 DETOUR M4-8 24" X 12"

M6-1 21" X 15"

GENERAL NOTES

CHANGES MAY BE REQUIRED WHEN PHYSICAL DIMENSIONS IN THE DETAIL DRAWINGS, STANDARD DETAILS, AND ROADWAY DETAILS ARE NOT ATTAINABLE TO MEET FIELD CONDITIONS OR RESULT IN DUPLICATE OR UNDESIRED OVERLAPPING OF DEVICES. MODIFICATION MAY INCLUDE: MOVING, SUPPLEMENTING, COVERING, OR REMOVAL OF DEVICES AS DIRECTED BY THE ENGINEER.

THE FOLLOWING GENERAL NOTES APPLY AT ALL TIMES FOR THE DURATION OF THE CONSTRUCTION PROJECT EXCEPT WHEN OTHERWISE NOTED IN THE PLAN OR DIRECTED BY THE ENGINEER.

LANE AND SHOULDER CLOSURE REQUIREMENTS

A) REMOVE LANE CLOSURE DEVICES FROM THE LANE WHEN WORK IS NOT BEING PERFORMED BEHIND THE LANE CLOSURE OR WHEN A LANE CLOSURE IS NO LONGER NEEDED OR AS DIRECTED BY THE ENGINEER.

B) WHEN PERSONNEL AND/OR EQUIPMENT ARE WORKING WITHIN 15 FT OF AN OPEN TRAVEL LANE, CLOSE THE NEAREST OPEN SHOULDER USING ROADWAY STANDARD DRAWING NO. 1101.04 UNLESS THE WORK AREA IS PROTECTED BY BARRIER OR GUARDRAIL OR A LANE CLOSURE IS INSTALLED.

TRAFFIC PATTERN ALTERATIONS

C) NOTIFY THE ENGINEER TWENTY ONE (21) CALENDAR DAYS PRIOR TO ANY TRAFFIC PATTERN ALTERATION.

SIGNING

D) INSTALL ADVANCE WORK ZONE WARNING SIGNS WHEN WORK IS WITHIN 40 FT FROM THE EDGE OF TRAVEL LANE AND NO MORE THAN THREE (3) DAYS PRIOR TO THE BEGINNING OF CONSTRUCTION.

E) PROVIDE SIGNING AND DEVICES REQUIRED TO CLOSE THE ROAD ACCORDING TO THE ROADWAY STANDARD DRAWINGS AND TRAFFIC CONTROL PLANS.

PROVIDE SIGNING REQUIRED FOR THE OFF-SITE DETOUR ROUTE AS SHOWN ON THIS SHEET.

F) COVER OR REMOVE ALL SIGNS AND DEVICES REQUIRED TO CLOSE THE ROAD WHEN ROAD CLOSURE IS NOT IN OPERATION.

COVER OR REMOVE ALL SIGNS REQUIRED FOR THE OFF-SITE DETOUR WHEN THE DETOUR IS NOT IN OPERATION.

G) ENSURE ALL NECESSARY SIGNING IS IN PLACE PRIOR TO ALTERING ANY TRAFFIC PATTERN.

TRAFFIC CONTROL DEVICES

H) PLACE TYPE III BARRICADES, WITH "ROAD CLOSED" SIGN R11-2 ATTACHED, OF SUFFICIENT LENGTH TO CLOSE ENTIRE ROADWAY.

PAVEMENT MARKINGS AND MARKERS

I) INSTALL PAVEMENT MARKINGS ON THE FINAL SURFACE AS FOLLOWS:

ROAD NAME	MARKING
SR 2533 (JACKSON HILL ROAD)	PAINT

J) TIE PROPOSED PAVEMENT MARKING LINES TO EXISTING PAVEMENT MARKING LINES.

K) REMOVE/REPLACE ANY CONFLICTING/DAMAGED PAVEMENT MARKINGS.

L) PASSING ZONE WILL BE DETERMINED IN THE FIELD AND MUST BE APPROVED BY THE ENGINEER.

PHASING

PHASE I

PRIOR TO ANY CONSTRUCTION OPERATIONS, PLACE AND COVER OFF-SITE DETOUR SIGNING AS SHOWN ON TCP-2 AND IN ACCORDANCE WITH RSD 1101.03 (SHEET 1 OF 9).

PHASE II

USING OFF-SITE DETOUR, UNCOVER DETOUR SIGNS, CLOSE -L- (SR 2533 / JACKSON HILL ROAD) TO TRAFFIC AND CONSTRUCT BRIDGE, APPROACHES AND ROADWAY UP TO AND INCLUDING FINAL LAYER OF SURFACE COURSE.

PHASE III

UPON COMPLETION OF BRIDGE, APPROACHES AND ROADWAY, PLACE FINAL PAVEMENT MARKING IN ACCORDANCE WITH RSD 1205.01. REMOVE BARRICADES AND DETOUR SIGNS AND OPEN -L- (SR 2533 / JACKSON HILL ROAD) TO TRAFFIC.

APPROVED: DATE: 6/20/13

SEAL

GENERAL NOTES, PHASING AND DETOUR SIGNING

SCALE:	NONE
DATE:	10/07/11
DWG. BY:	RGK
DESIGN BY:	EDM
REVIEWED BY:	TSH

REVISIONS

CADD FILE

2:26:11 PM
5109F_TC_TCP_Sheet2.dgn
6/5/2013

5/14/99

ROADSIDE ENVIRONMENTAL UNIT
DEPARTMENT OF TRANSPORTATION
DIVISION OF HIGHWAYS
RALEIGH, N.C.

2012 STANDARD SPECIFICATIONS

EROSION CONTROL PLAN

PROJECT REFERENCE NO.	SHEET NO.
BD-5109F	EC-1
R/W SHEET NO.	
ROADWAY DESIGN ENGINEER	HYDRAULICS ENGINEER

THESE EROSION AND SEDIMENT CONTROL PLANS COMPLY WITH THE REGULATIONS SET FORTH BY THE NCG-010000 GENERAL CONSTRUCTION PERMIT EFFECTIVE AUGUST 3, 2011 ISSUED BY THE NORTH CAROLINA DEPARTMENT OF ENVIRONMENT AND NATURAL RESOURCES DIVISION OF WATER QUALITY.

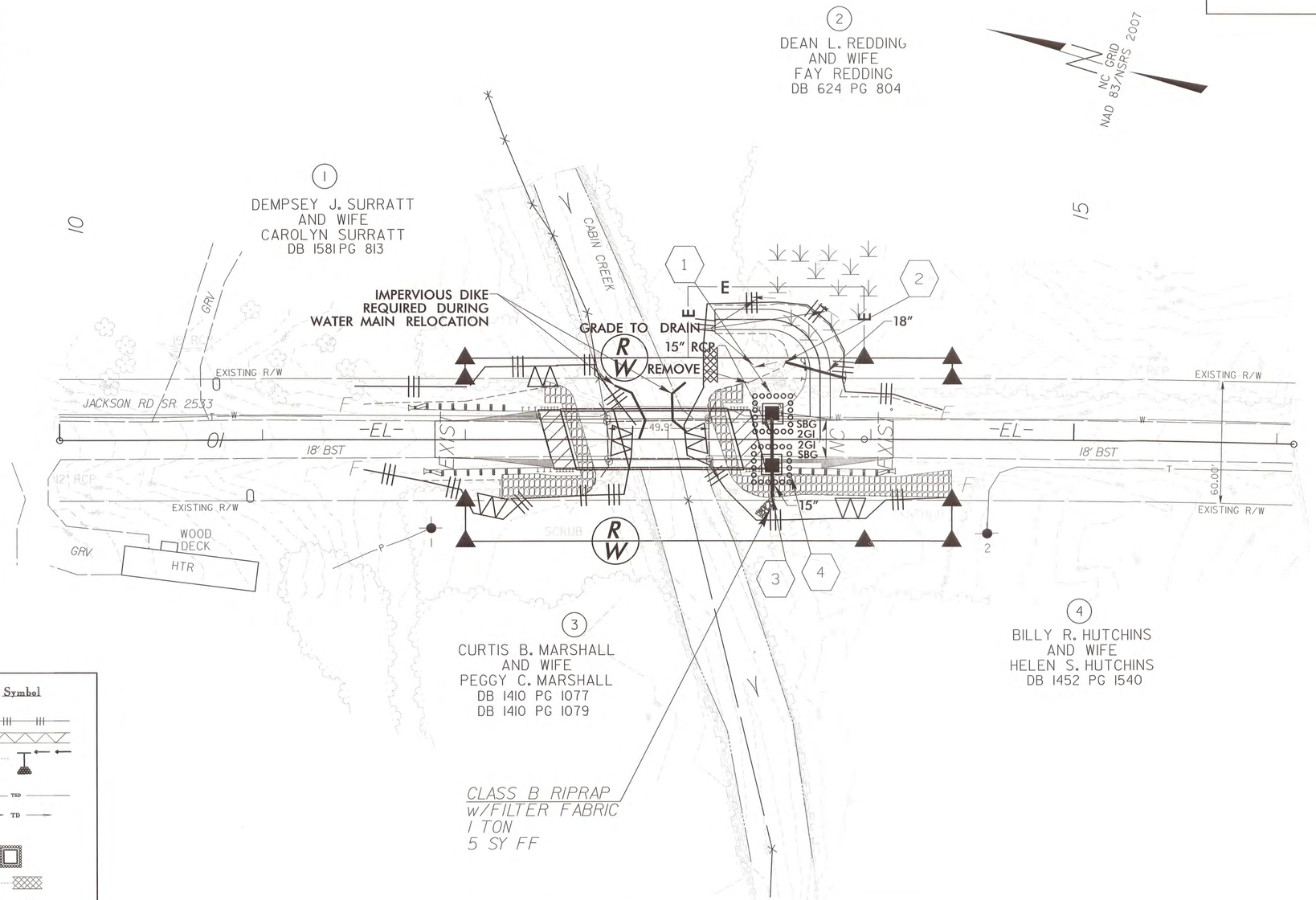

NOTES: ANY DEVIATION FROM OPTIONS GIVEN WILL REQUIRE PRIOR APPROVAL BY ENGINEER.

ADDITIONAL EROSION CONTROL DEVICES MAY NEED TO BE INSTALLED AS DIRECTED BY THE ENGINEER.

Std. #	Description	Symbol
1605.01	Temporary Silt Fence	
1606.01	Special Sediment Control Fence	
1622.01	Temporary Berms and Slope Drains	
1630.02	Silt Basin Type B	
1630.03	Temporary Silt Ditch	TSD
1630.05	Temporary Diversion	TD
1630.06	Special Stilling Basin	
1632.03	Rock Inlet Sediment Trap Type C	
1633.01	Temporary Rock Silt Check Type-A	
	Temporary Rock Silt Check Type-A with Matting and Polyacrylamide (PAM)	
1633.02	Temporary Rock Silt Check Type-B	
	Wattle	
	Wattle with Polyacrylamide (PAM)	
1634.02	Temporary Rock Sediment Dam Type-B	
1635.01	Rock Pipe Inlet Sediment Trap Type-A	

CHARLES HEAFNER
LEVEL IIIA NAME

640
LEVEL IIIA CERTIFICATION NO.

2012 STANDARD DRAWINGS

1605.01 Temporary Silt Fence
1606.01 Special Sediment Control Fence
1622.01 Temporary Berms and Slope Drains
1631.01 Matting Installation
1632.03 Rock Inlet Sediment Trap Type C

Scale 1" = 30'
30' 0 30' 60'

$$$$SYSTIME$$$$
$$$$IFILENAME$$$$

PROJECT REFERENCE NO.	SHEET NO.
BD-5109F	EC-2

PLANS PREPARED BY:
PARSONS BRINCKERHOFF
434 FAYETTEVILLE STREET
SUITE 1500
RALEIGH, NC 27601
LICENSE NO. F-0165

DIVISION OF HIGHWAYS
STATE OF NORTH CAROLINA

SOIL STABILIZATION TIMEFRAMES

SITE DESCRIPTION	STABILIZATION TIME	TIMEFRAME EXCEPTIONS
PERIMETER DIKES, SWALES, DITCHES AND SLOPES	7 DAYS	NONE
HIGH QUALITY WATER (HQW) ZONES	7 DAYS	NONE
SLOPES STEEPER THAN 3:1	7 DAYS	IF SLOPES ARE 10' OR LESS IN LENGTH AND ARE NOT STEEPER THAN 2:1, 14 DAYS ARE ALLOWED.
SLOPES 3:1 OR FLATTER	14 DAYS	7 DAYS FOR SLOPES GREATER THAN 50' IN LENGTH.
ALL OTHER AREAS WITH SLOPES FLATTER THAN 4:1	14 DAYS	NONE, EXCEPT FOR PERIMETERS AND HQW ZONES.

WATER RELOCATION PLAN AND PROFILE (1)

PROJECT REFERENCE NO.	SHEET NO.
BD-5109F	UC-1
R/W SHEET NO.	
C.O.A.	ENGINEER'S SEAL

SOUTH CAROLINA PARSONS BRINCKERHOFF, INC. No. 0892 CERTIFICATE OF AUTHORIZATION

NORTH CAROLINA PROFESSIONAL SEAL 036445 ENGINEER RANDALL L. ROBERTS 6/17/13

PLANS PREPARED BY:
PARSONS BRINCKERHOFF
434 FAYETTEVILLE STREET
SUITE 1500
RALEIGH, NC 27601
LICENSE NO. F-0165

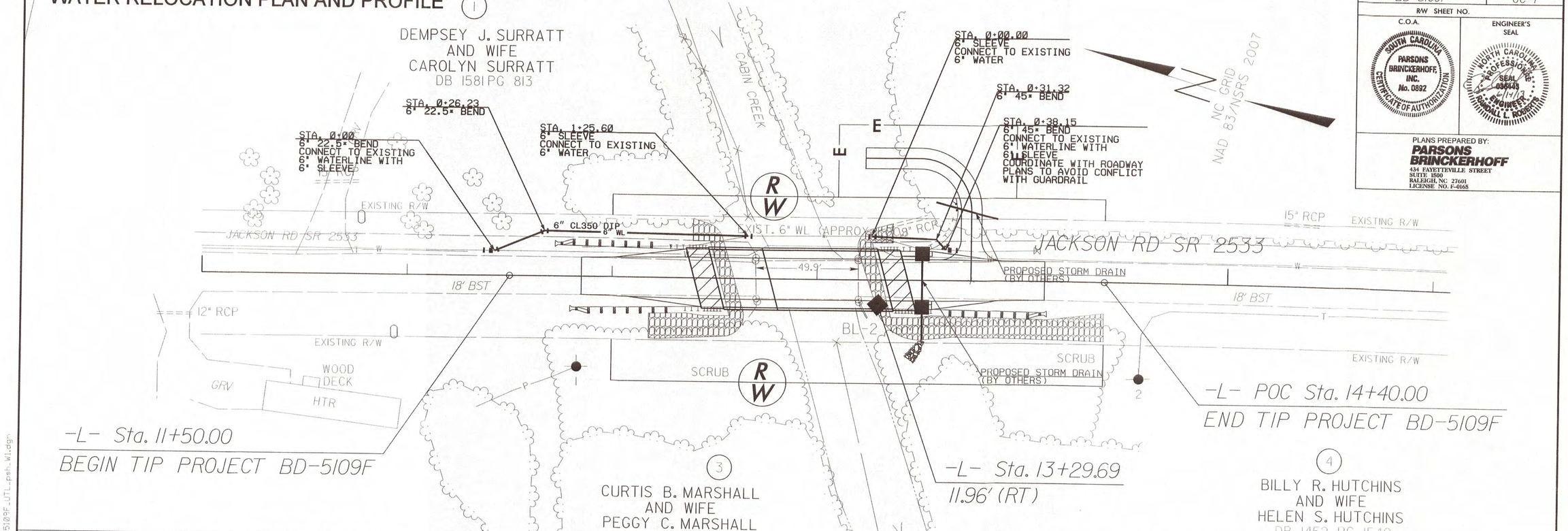

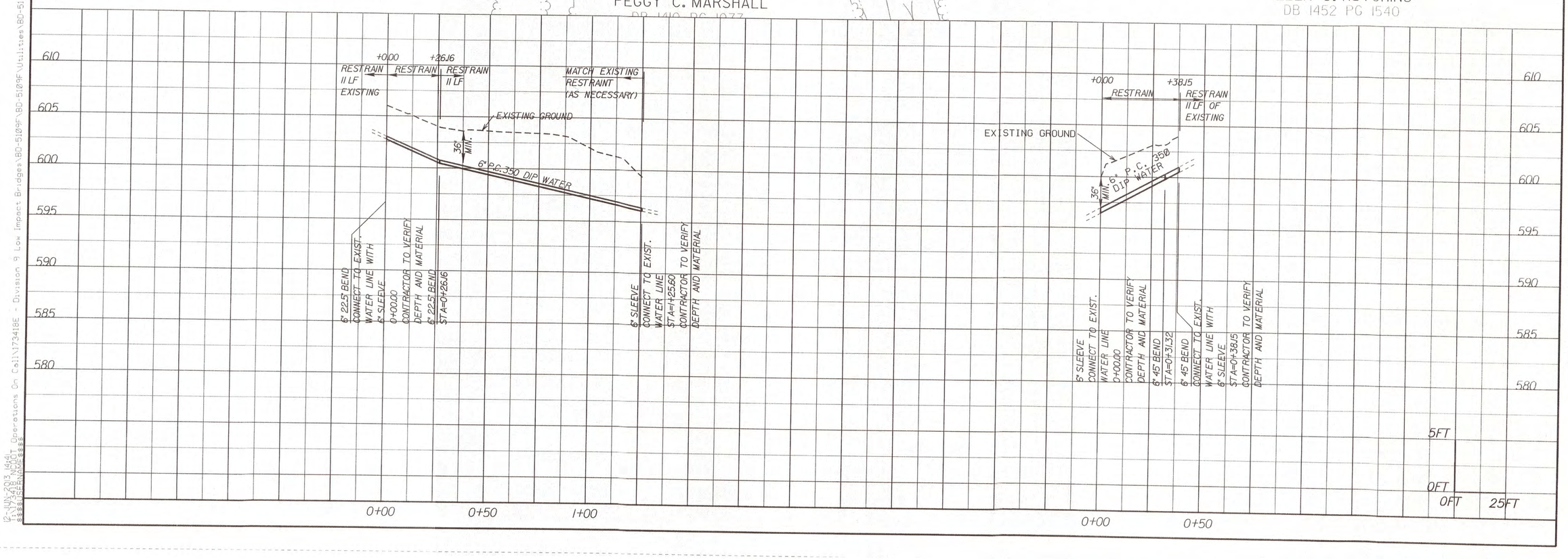

8/17/99
02-JUN-2013 14:41
i:\173418\NCDOT Operations On Call\173418E - Division 9 Low Impact Bridges\BD-5109F\BD-5109F\Utilities\BD-5109F_UTL_psh_W1.dgn
$$$$USERNAME$$$$

PROJECT REFERENCE NO.	SHEET NO.
BD-5109F	UC-2
R/W SHEET NO.	
C.O.A.	ENGINEER'S STAMP

SOUTH CAROLINA
PARSONS BRINCKERHOFF, INC.
No. 0892
CERTIFICATE OF AUTHORIZATION

NORTH CAROLINA PROFESSIONAL SEAL 030443 ENGINEER RANDALL L. ROBERTS 6/11/13

WATER GENERAL NOTES

1. ALL PROPOSED PIPE SHALL BE 6" P.C. 350 DUCTILE IRON MANUFACTURER RESTRAINT JOINT PIPE WITH MINIMUM 4 DEGREES ALLOWABLE DEFLECTION.

2. THE CONTRACTOR SHALL COORDINATE ISOLATION OF THE EXISTING WATER MAIN FOR TIE-INS WITH DAVIDSON WATER, INC. 2 WEEKS PRIOR AND AGAIN 24 HOURS PRIOR TO ANY REQUIRED SHUTDOWN OR TAPPING OPERATION. CONTRACTOR SHALL NOTIFY THE HANDY SANITARY DISTRICT. TO SCHEDULE INSPECTION AT LEAST 48 HOURS IN ADVANCE OF COMPLETION.

3. SHUT-DOWN OF THE EXISTING WATER LINE TO ACCOMMODATE CONNECTION OF THE NEW WATERLINE SHALL BE LIMITED TO 4 HOURS MAXIMUM.

4. PRIOR TO MAKING TIE-INS: FACILITATE FILLING, FLUSHING, TESTING, STERILIZATION, AND BLOWOFF OF PROPOSED WATER MAIN BY INSTALLING 6"X2" TAPPING SADDLE AND VALVE ON THE EXISTING 6" PVC MAIN. HARD PIPE FROM TAPPING VALVE TO STUBBED OUT END OF PROPOSED 6" WATER MAIN WITH 2" SOLVENT WELD SCHEDULE 40 PVC PIPE. PROVIDE RESTRAINED 6" CAP TAPPED FOR 2" CONNECTION. PROVIDE TEMPORARY 2" BLOWOFF ON OPPOSITE END OF PROPOSED MAIN WITH LIKE MATERIALS INCLUDING 2" ISOLATION VALVE.

5. THE WATER MAIN SHALL BE FLUSHED AT 2.5 FPS AND PRESSURE TESTED BEFORE CONNECTIONS ARE MADE. TEST SHALL CONSIST OF A 3-HOUR PRESSURE TEST AT 200 PSI WITH ALLOWABLE LEAKAGE PER DAVIDSON WATER, INC. STANDARDS, LATEST EDITION. CONTRACTOR SHALL PROVIDE ALL TEMPORARY PLUGS, FITTINGS, AND THRUST RESTRAINT TO PERFORM THE TEST. ALL MATERIALS, LABOR, EQUIPMENT, AND TOOLS NECESSARY FOR PRESSURE TESTING SHALL BE INCLUDED IN THE UNIT BID PRICE OF ASSOCIATED WATER MAIN.

6. THRUST RESTRAINT OF NEW BURIED WATER MAIN SHALL BE PROVIDED PER LENGTHS SPECIFIED ON PROFILE. RESTRAIN USING FRICTION DEVICES IN THE JOINT GASKET ARE NOT ACCEPTABLE. RESTRAINT SHALL BE PROVIDED USING THE PIPE MANUFACTURER'S MECHANICAL RESTRAINED JOINT SYSTEM, THE EBBA IRON, INC. MEGALUG SYSTEM, OR APPROVED EQUAL.

7. THRUST RESTRAINT OF EXISTING DIP WATER MAIN JOINTS SHALL BE PROVIDED USING THE EBBA IRON INC. SERIES 1100 HD HARNESS SYSTEM, OR APPROVED EQUAL.

8. AS-BUILT INFORMATION: THE CONTRACTOR SHALL PROVIDE 2 SETS OF MARKED UP DRAWINGS SHOWING ALL MODIFICATIONS TO THE CONTRACT DRAWINGS. THESE MARKED UP SETS SHALL INCLUDE STATION/OFFSET/ELEVATION ACCURATELY LOCATING ALL UNDERGROUND PIPING, STRUCTURES, FITTINGS, AND CASING ENDS. INFORMATION SHALL BE GATHERED USING SURVEY INSTRUMENTS. MARK-UP OF CONTRACT DRAWING IS ACCEPTABLE.

9. BACKFILLING AND COMPACTION OF WATER MAIN TRENCHES SHALL BE IN ACCORDANCE WITH HANDY SANITARY DISTRICT SPECIFICATIONS.

10. CONTRACTOR SHALL PROVIDE GAUGED PIPE FOR ALL FIELD CUTTING OPERATIONS. CUT ENDS SHALL BE REPAIRED IN ACCORDANCE WITH THE MANUFACTURER'S RECOMMENDATIONS PRIOR TO MAKING A JOINT SEAL.

11. COMPACT SLEEVES ARE NOT ACCEPTABLE. ALL SLEEVES SHALL BE MECHANICAL JOINT, LONG BODY STYLE, PER AWWA C153.

12. ALL WATER MAIN PROFILES ARE SHOWN ALONG THE LENGTH OF THE WATER LINE.

13. CONTRACTOR TO VERIFY EXISTING PIPE MATERIALS PRIOR TO ORDERING MATERIALS.

14. CONTRACTOR TO PROVIDE ALL EROSION CONTROL MEASURES NECESSARY TO PREVENT THE LOSS OF SEDIMENT INTO THE CREEK OR STORM DRAINAGE SYSTEM. ALL DISTURBED AREAS TO BE GRASSED AND STABILIZED ONCE THE NEW WATERLINE HAS BEEN TESTED AND ACCEPTED BY THE UTILITY.

15. CONTRACTOR TO PROVIDE TRAFFIC CONTROL MEASURES AS NECESSARY TO FACILITATE CONSTRUCTION OF THE WATER MAIN PER NCDOT STANDARDS.

GENERAL MATERIAL SPECIFICATIONS

1. PIPE; SDR 17 LENGTHS 20' MAX. 2", 3". PIPE MUST HAVE NSF/PW SEAL STAMPED ON IT.

2. PIPE; SDR 21 LENGTHS 20' MAX. 2", 3", 4". PIPE MUST HAVE NSF/PW SEAL STAMPED ON IT.
3. PIPE; DUCTILE IRON P.C. 350 6", 8", 10", 12", 16".

4. VALVES; AWWA STANDARD SPECIFICATIONS. VALVES SHALL OPEN LEFT, NON-RISING STEM. 200 PSI WORKING PRESSURE IRON BODY, RESILIENT SEAT GATE VALVE 2", 3", 4", 6", 8", MUELLER, M & H, AMERICAN DARLING, KENNEDY.

5. FIRE HYDRANTS; AWWA TYPE DRY TOP NATIONAL STANDARD, TRAFFIC TYPE. 4½" VALVE OPENING, 1½" PENT., TWO 2½" OPENINGS, ONE 4½" OPENING, BRONZE TO BRONZE SEAT, YELLOW BARREL, RED BONNET CAPS, NOT LESS THAN 3' 6" BURY, OPEN LEFT. MUELLER, SUPER CENTURION 200, M & H #129, AMERICAN DARLING, MARK 73-I, KENNEDY, K81A.

6. FITTINGS; DUCTILE IRON PUSH ON, M.J.
ALL FIRE HYDRANTS SHALL BRANCH OFF WITH HYDRANT TEE AND MOST STUB OUTS.

7. ALL MIPX BELL ADAPTERS 2" AND 3" SHALL BE HARCO.

8. ALL THREADED PIPE (NIPPLES ETC.) SHALL BE BRASS 2" AND 3".

9. VALVE BOXES 5¼" CAST IRON WITH WATER WRITTEN ON THE LID, SCREW TYPE.

10. METER BOX PLASTIC 12" DEEP BROOKS #1419-12, JONES, METER BOX LID, SOLID CAST IRON 15 LB. MIN.
11. LINESETTER; FORD LSVBHH41-233W, MUELLER B-2418F-2A WITH H-14222 AND H-14227 END PIECES.
12. TUBING; TYPE K COPPER ASTM B-88.

13. CORPORATION STOPS; FORD F-1000, MUELLER H-15008.

14. SERVICE SADDLES; MULLER H-134, FORD S70, CC THREADS.

15. TAPPING SLEEVES STAINLESS STEEL, FULL RUBBER BACK, JCM, ROMAC-SST, FORD, SMITH-BLAIR.

ENGINEER'S NOTES

1. MINIMUM 3 FEET COVER ON WATER LINES, A MAXIMUM OF 4 FEET. (SEE TRENCH SECTION AND LINESETTER INSTALLATION TYPICAL)

2. WATER LINE SHALL BE PLACED AT LEAST 3 FEET FROM EDGE OF PAVEMENT BUT NO GREATER THAN 5 FEET FROM EDGE OF PAVEMENT. (SEE TRENCH SECTION AND LINESETTER INSTALLATION TYPICAL)
3. SPECIAL CARE SHOULD BE TAKE AT CUL-DE-SACS TO KEEP THE WATER LINE THE PROPER DISTANCE FROM THE PAVEMENT. (SEE CUL-DE-SAC TYPICAL)

4. WATER LINES 6" AND OVER SHALL BE DUCTILE IRON.

5. THE DEVELOPER IS RESPONSIBLE FOR THE INSTALLATION OF TAPS OR ENCASEMENTS ON THE LONG SIDE WHEN THE SUBSURFACE OF THE ROADWAY CANNOT BE BORED. (SEE SERVICE ENCASEMENT TYPICALS)
6. THE MAXIMUM DISTANCE FOR A 2" LINE IS 500'. THE MAXIMUM NUMBER OF TAPS ON A 2" LINE IS 6. (SEE CUL-DE-SAC TYPICAL)

7. MINIMUM FIRE FLOW SHALL BE 500 GALLONS PER MINUTE AT 30 P.S.I.

8. WATER MAINS RUNNING UNDER THE PAVEMENT ARE TO BE DUCTILE IRON.

9. FIRE HYDRANTS SHALL BE SPACED NO MORE THAN 900 FEET APART (SOME TYPES OF DEVELOPMENTS MAY REQUIRE CLOSER SPACING).

10. AT ALL CREEK CROSSINGS WHERE THE WATER LINE IS RUN THROUGH OR UNDER THE CREEK, THERE SHALL BE 3 FOOT COVER AND STEEL ENCASEMENT PIPE, D.I. USED AS A CARRIER.

11. ALL LINES, SMALLER THAN 6", WITH A PRESSURE OF 100 PSI (STATIC OR DYNAMIC) OR GREATER, SHALL BE CONSTRUCTED OF DUCTILE IRON. (TYPE OF MATERIAL SHALL BE DETERMINED BY DAVIDSON WATER, INC.)

12. PROVIDE HANDY SANITARY DISTRICT. WITH A DIGITAL COPY OF THE STREET/WATER LINE LAYOUT.

13. BEFORE ENGINEER WRITES LETTER FOR VERIFICATION OF CONSTRUCTION, HANDY SANITARY DISTRICT. WATERLINE REPRESENTATIVE, ENGINEER OR AGENT AND CONTRACTOR, SHALL PERFORM A FINAL INSPECTION.

INSTALLATION SPECIFICATIONS

1. WORK TO BE PERFORMED SHALL CONSIST OF FURNISHING AND INSTALLING COMPLETE AND READY FOR SERVICE ALL WATER MAIN AND APPURTENANCES IN ACCORDANCE WITH THE CONTRACT PLANS AND SPECIFICATIONS. PRIOR TO COMMENCING WORK, THE CONTRACTOR WILL PROVIDE 2 WORKING DAYS NOTICE TO DAVIDSON WATER INC., NCDOT, AND ALL OTHER APPROPRIATE UTILITY COMPANIES.

2. INSTALL ALL EROSION CONTROL MEASURES IN ACCORDANCE WITH SHEET EC-1 PRIOR TO COMMENCING WATERLINE CONSTRUCTION

3. TRENCH EXCAVATION IN ROCK SHALL BE A MINIMUM OF 2 FEET WIDER THAN THE NOMINAL PIPE DIAMETER. EXCAVATION SHALL BE 6" BELOW THE PROPOSED INVERT OF THE PVC PIPE AND BACKFILLED(CUSHIONED) WITH CLEAN SOIL OR SAND.

4. BACKFILL ALONG SIDES AND IMMEDIATELY OVER PIPE BY HAND. BACKFILL MATERIAL AROUND PIPE SHALL BE FREE OF ROCKS AND OTHER DEBRIS. TRENCH BACKFILL UNDER EXISTING OR PROPOSED PAVING AND ROAD SHOULDERS SHALL BE COMPACTED TO A DENSITY OF 95 PERCENT OF MAXIMUM DRY DENSITY.

5. ENCASEMENT PIPE SHALL BE INSTALLED BY DRY BORING AND JACKING. CASING DIAMETER, LENGTH, AND WALL THICKNESS SHALL BE AS SHOWN ON PLANS. MATERIALS AND WORKMANSHIP IN THE EXISTING OR PROPOSED NCDOT RIGHT OF WAY SHALL CONFORM TO NCDOT STANDARDS AND SPECIFICATIONS. THE CONTRACTOR MAKING THE BORED CROSSING SHALL NOTIFY NCDOT PRIOR TO THE START OF WORK WITH ENOUGH NOTICE FOR NCDOT TO PROVIDE INSPECTORS.

6. WATER MAINS SHALL BE LAID AT LEAST 10 FEET LATERALLY FROM EXISTING OR PROPOSED SANITARY SEWERS. WATER MAINS SHALL HAVE A MINIMUM OF 18" VERTICAL SEPARATION OVER SEWER MAINS. WHERE THIS SEPARATION IS NOT POSSIBLE OR THE WATER MAIN IS LAID UNDER THE SEWER MAIN, BOTH THE WATER AND SEWER PIPE SHALL BE DUCTILE IRON PIPE. CENTER PIPE SPANS AT POINT OF INTERSECTION IN ORDER TO HAVE 10 FEET FROM WATER LINE JOINT TO POINT OF INTERSECTION.

7. MINIMUM COVER FOR WATER MAINS SHALL BE 36 INCHES. MAXIMUM COVER SHALL BE 48 INCHES. MINIMUM TRENCH WIDTH SHALL BE PIPE DIAMETER PLUS 18 INCHES. (SEE TRENCH SECTION AND LINESETTER TYPICAL)

8. ALL PIPE SHALL BE THOROUGHLY CLEANED OF ALL EARTH MATERIAL AND RUBBISH BEFORE BEING PLACED IN THE TRENCH. BELL HOLES WILL BE DUG AT EACH JOINT. PIPE SHALL BE PLACED ON FIRM, SMOOTH FOUNDATION TO PREVENT SUBSEQUENT SETTLEMENT.

9. CONCRETE THRUST BLOCKING OR MECHANICAL RESTRAINT SHALL BE CONSTRUCTED AT ALL BENDS, TEES, REDUCERS, AND DEAD ENDS AND WHERE CONDITIONS WARRANT AND AS DESIGNATED ON PLANS. ALL FITTINGS AND ACCESSORIES TO BE WRAPPED WITH POLYETHYLENE FILM PRIOR TO PLACING BLOCKING.
10. ALL WATER MAINS SHALL BE FLUSHED AND DISINFECTED PRIOR TO BEING PUT IN SERVICE. FLUSHING SHALL BE ACCOMPLISHED WITH SUFFICIENT WATER VELOCITY (MINIMUM OF 2.5 FPS) TO THOROUGHLY CLEAN THE MAIN. THE MAINS SHALL BE DISINFECTED USING A CHLORINE EQUAL TO OR GREATER THAN 50 MILLIGRAMS PER LITER (50 PPM). THE CHLORINE SOLUTION SHALL REMAIN IN THE MAINS FOR A MINIMUM OF 24 HOURS. BACTERIOLOGICAL TEST SAMPLES SHALL BE TAKEN BY DAVIDSON WATER INC. FOR EVALUATION AND LINE DISINFECTANT APPROVAL. AFTER DISINFECTION IS COMPLETE, THE NEW LINES SHALL BE FLUSHED SUFFICIENTLY SO THAT THE CHLORINE CONCENTRATION LEVEL IN THE NEW LINES DO NOT EXCEED EXISTING LINE CONCENTRATION.
11. WATER LINES SHALL BE PLACED AT LEAST 3 FEET MINIMUM FROM THE EDGE OF THE PAVEMENT BUT NO GREATER THAN 5 FEET FROM THE EDGE OF THE PAVEMENT. (SEE TRENCH SECTION AND LINESETTER INSTALLATION TYPICAL)

12. ALL TAPPING SLEEVES AND VALVES SHALL BE AIR TESTED AT 150 P.S.I. FOR A MINIMUM OF 15 MINUTES. TESTING IS TO TAKE PLACE BEFORE TAPS ARE MADE.

13. CONTRACTOR TO ENSURE NO LOSS OF SEDIMENT INTO CREEK.

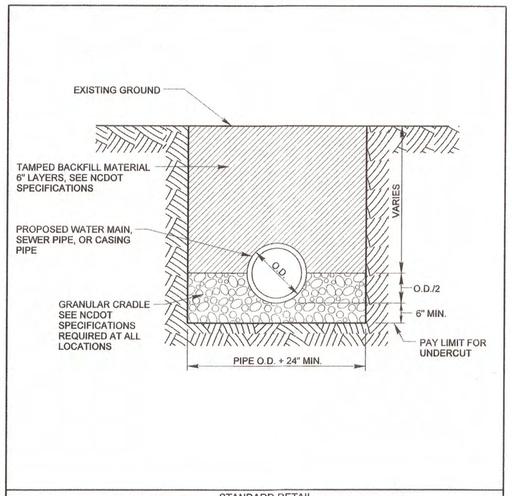

STANDARD DETAIL
N.T.S.

PIPE BEDDING\BACKFILL DETAIL

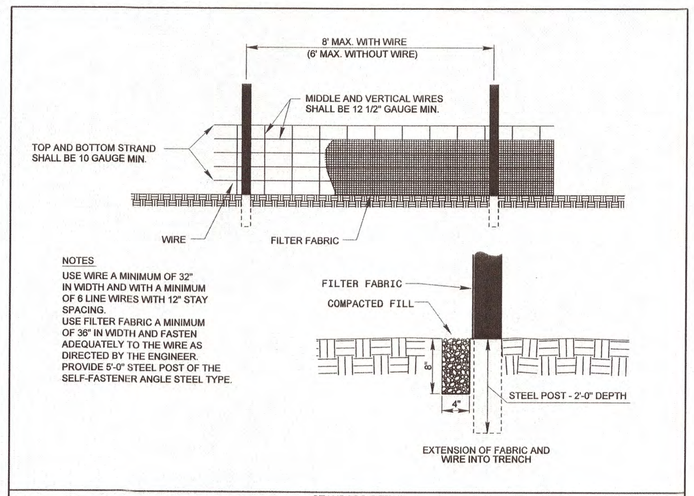

STANDARD DETAIL
N.T.S.

TEMPORARY SILT FENCE

5/14/99
8E - [12-JUN-2013 14:14] - Division 8 Impact Bridges\BD-5109F\BD-5109F\Utilities\BD-5109F_UTL_psh_W2.dgn
$$$$USERNAME$$$$

PROJ. REFERENCE NO.	SHEET NO.
BD-5109F	X-1

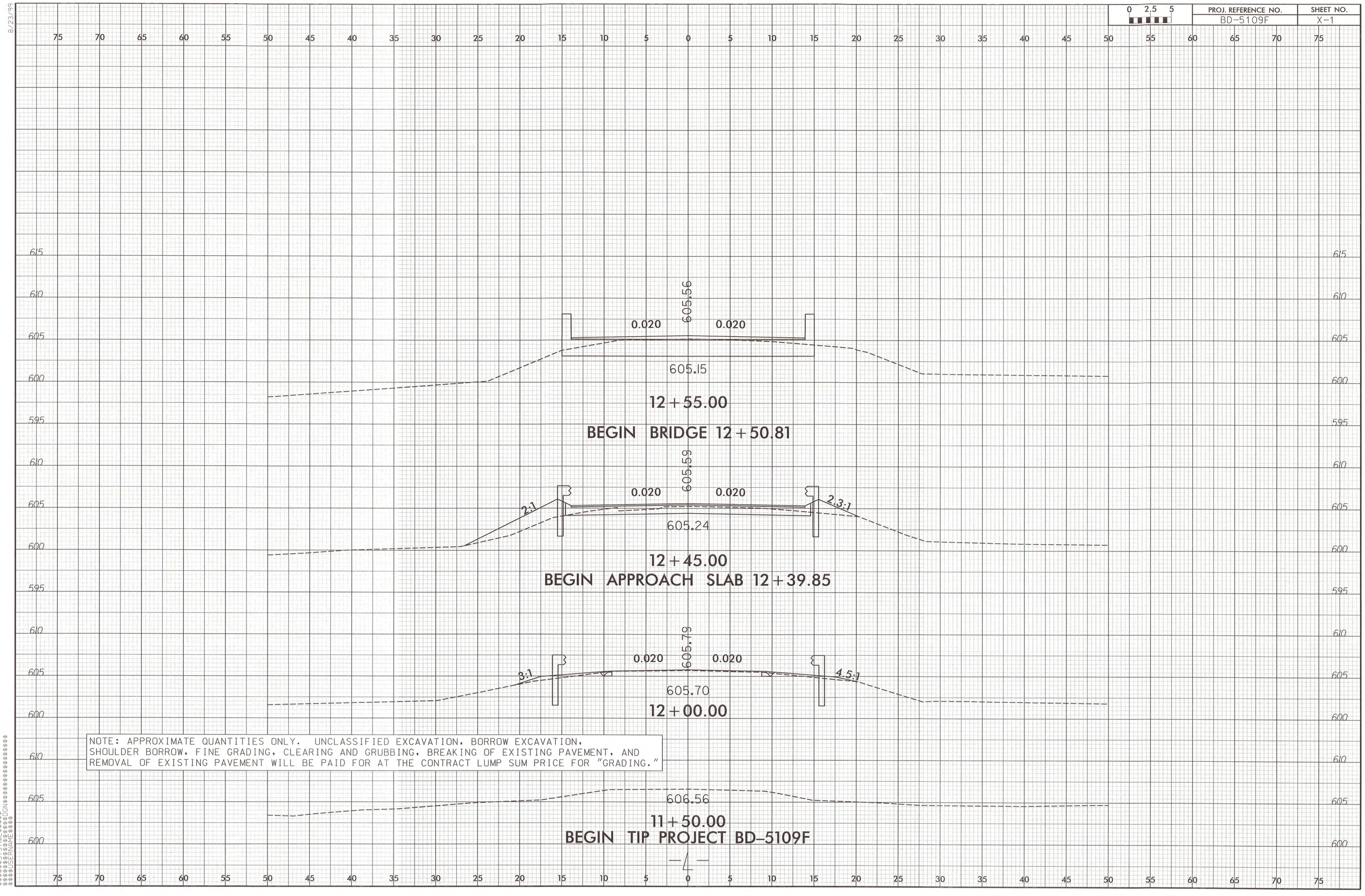

NOTE: APPROXIMATE QUANTITIES ONLY. UNCLASSIFIED EXCAVATION, BORROW EXCAVATION, SHOULDER BORROW, FINE GRADING, CLEARING AND GRUBBING, BREAKING OF EXISTING PAVEMENT, AND REMOVAL OF EXISTING PAVEMENT WILL BE PAID FOR AT THE CONTRACT LUMP SUM PRICE FOR "GRADING."

8/23/99

$$$$SYSTIME$$$$
$$$$DGN$$$$
$$$$USERNAME$$$$

8/23/99

0 2.5 5	PROJ. REFERENCE NO.	SHEET NO.
	BD-5109F	X-2

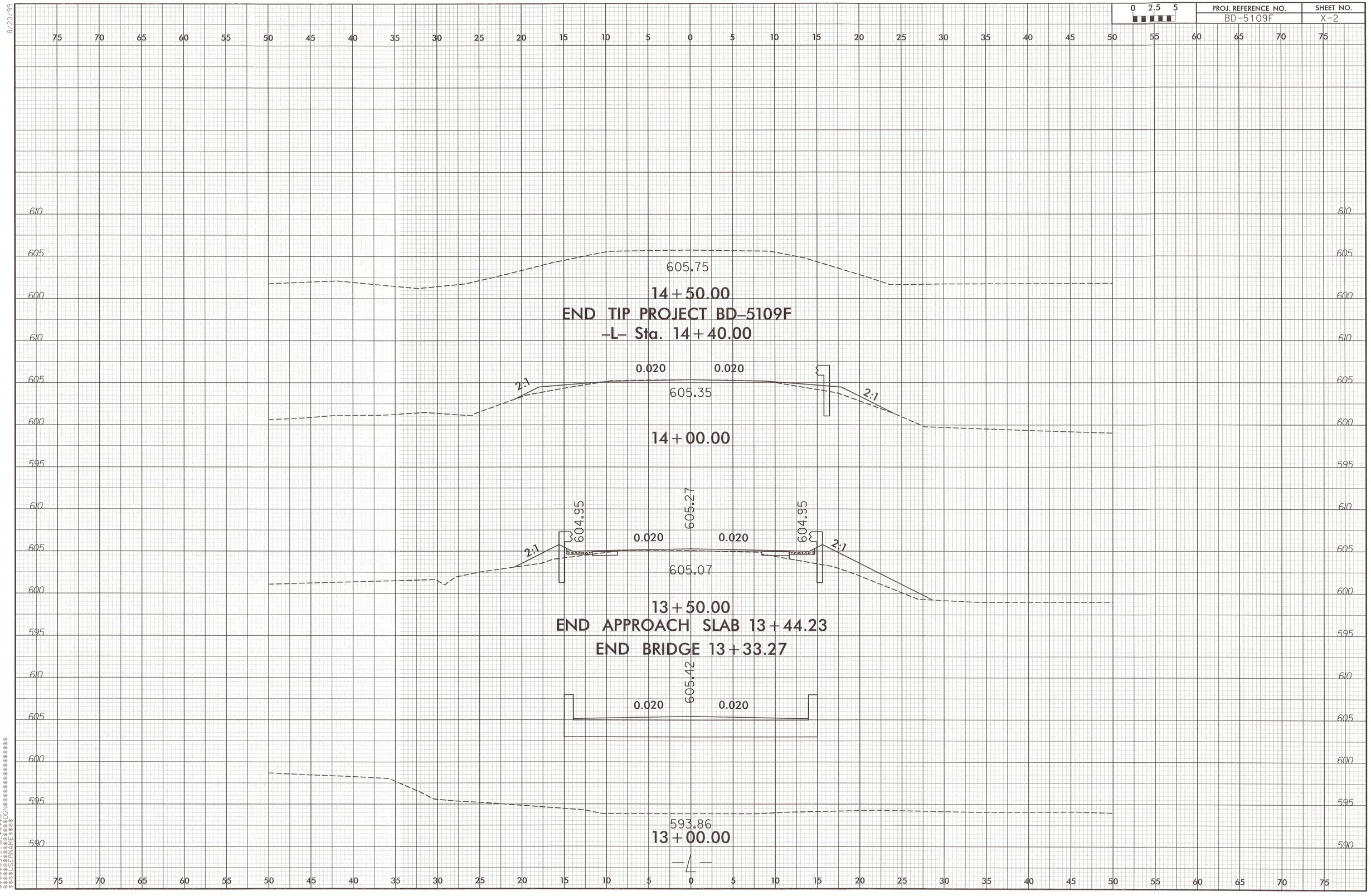

SYSTIME$$$$
SYMBOL$$$$
SCRIPT$$$$
SCALE$$$$
DGN$$$$

8/23/99

PROJ. REFERENCE NO.	SHEET NO.
BD-5109F	X-3

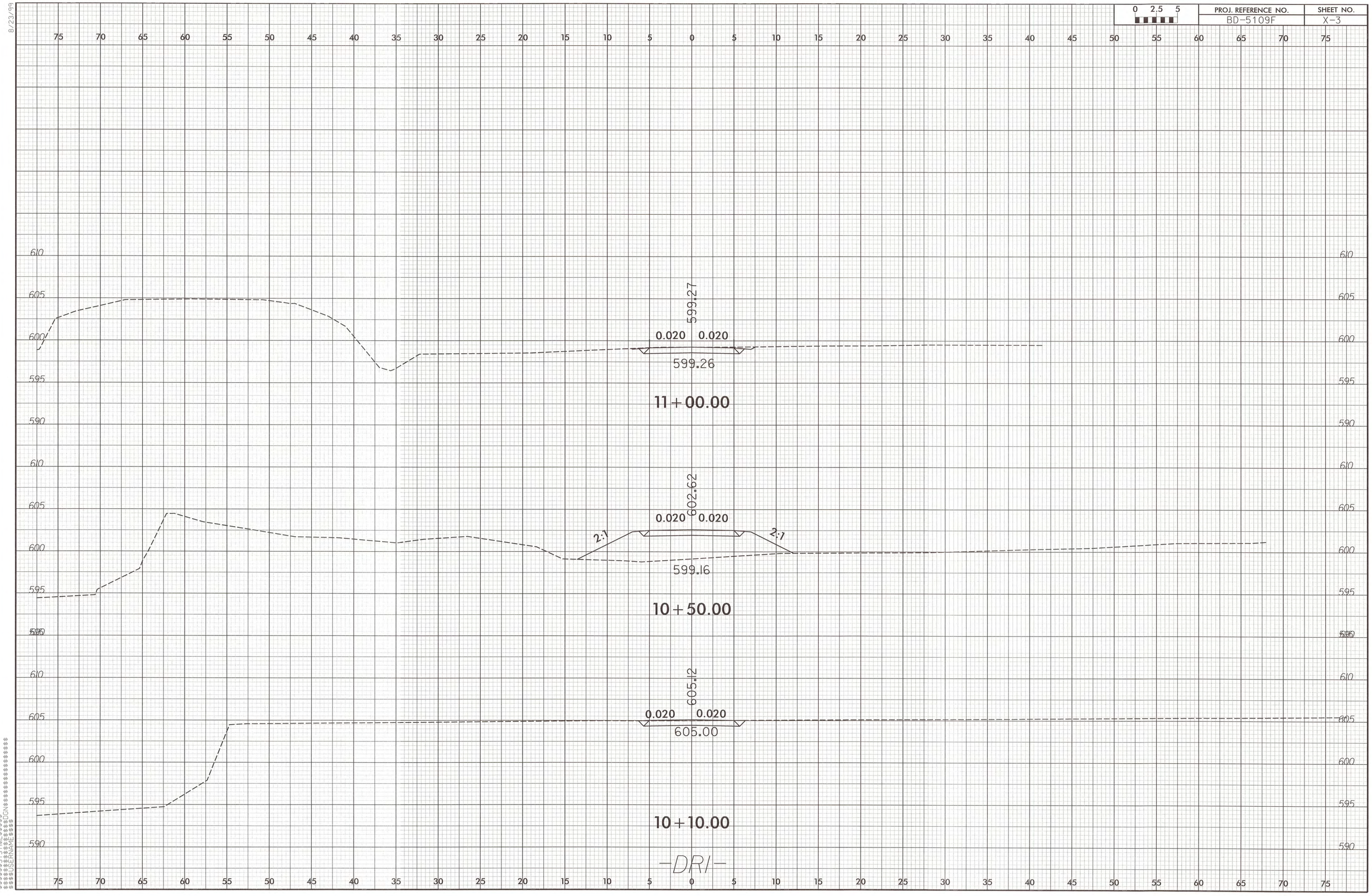

$$$$SYSTIME$$$$
$$$$DGN$$$$
$$$$DERNAME$$$$

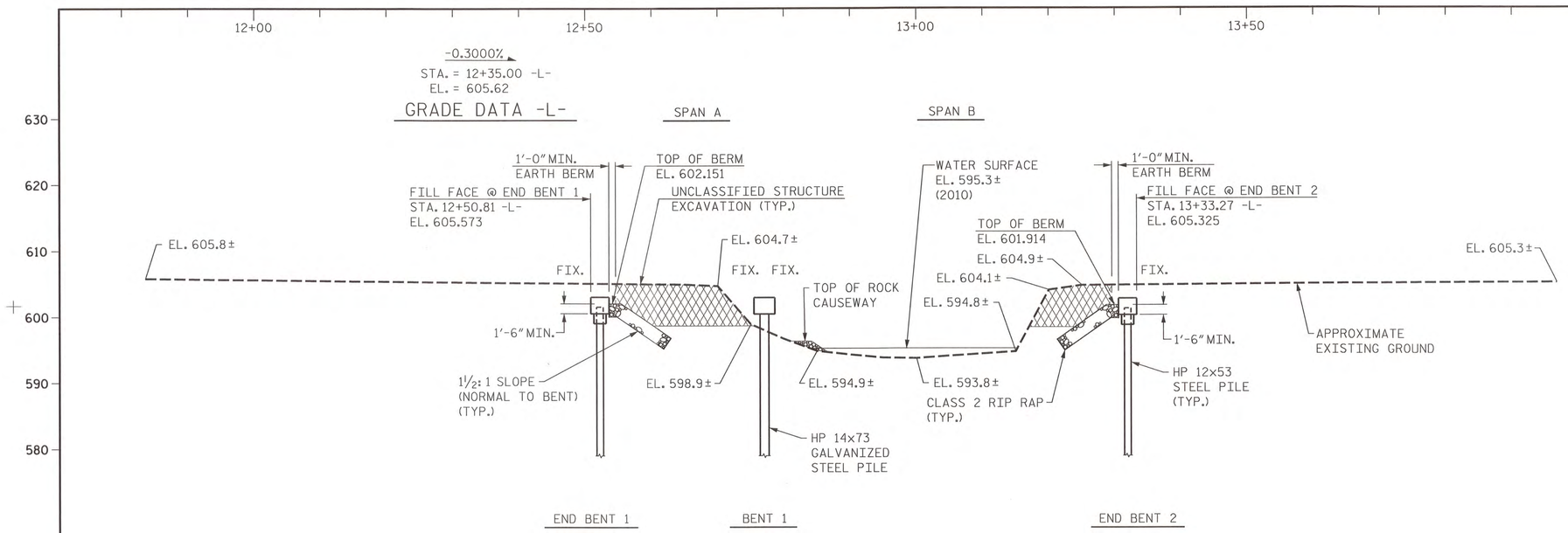

SECTION ALONG -L-

HYDRAULIC DATA

DESIGN DISCHARGE	2540 CFS
FREQUENCY OF DESIGN FLOOD	25 YRS.
DESIGN HIGH WATER ELEVATION	604.24
DRAINAGE AREA	13.0 SQ.MI.
BASE DISCHARGE (Q100)	3560 CFS
BASE HIGH WATER ELEVATION	605.70

OVERTOPPING FLOOD DATA

OVERTOPPING FLOOD DISCHARGE	3300 CFS
FREQUENCY OF OVERTOPPING FLOOD	<100 YRS.
OVERTOPPING FLOOD ELEVATION	605.23

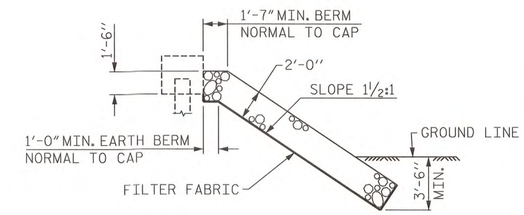

RIP RAP DETAIL

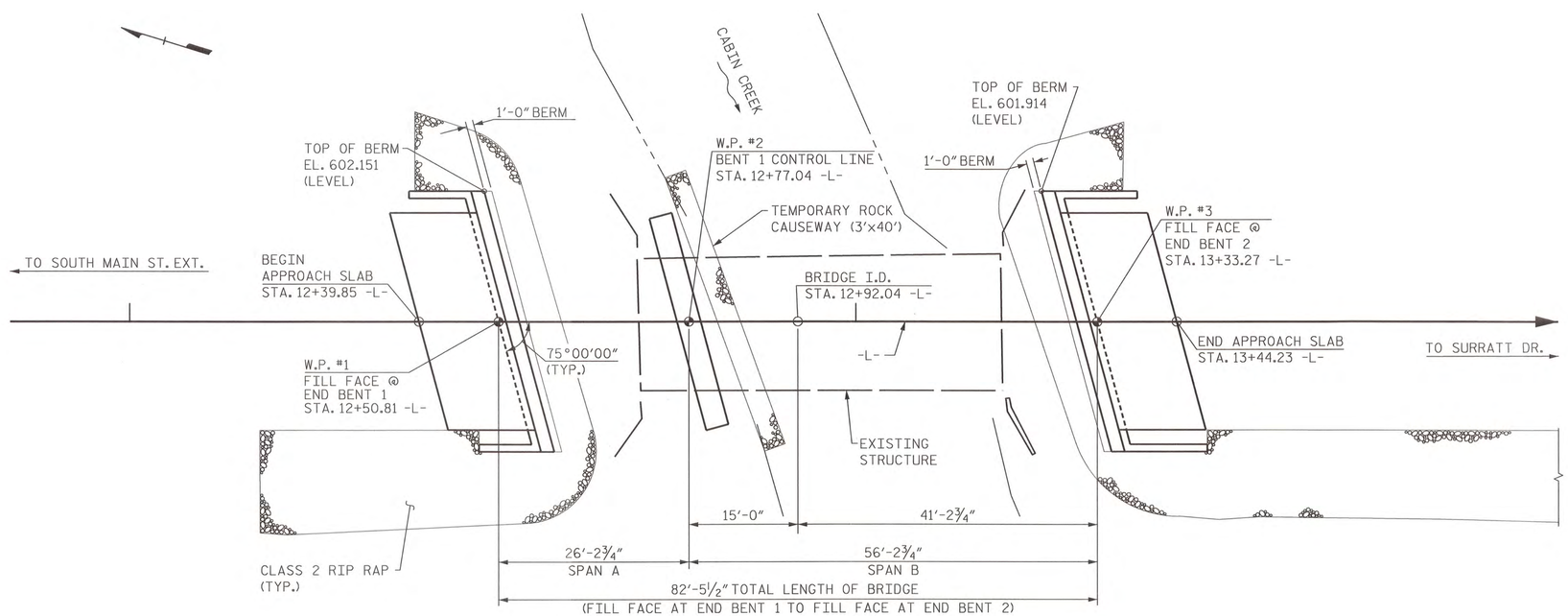

PLAN

I HEREBY CERTIFY THESE PLANS ARE THE AS-BUILT PLANS

PROJECT NO. BD-5109F

DAVIDSON COUNTY

STATION: 12+92.04 -L-

SHEET 1 OF 2 REPLACES BRIDGE NO. 280282

STATE OF NORTH CAROLINA
DEPARTMENT OF TRANSPORTATION
RALEIGH

GENERAL DRAWING
FOR BRIDGE ON SR 2533 OVER
CABIN CREEK BETWEEN
SR 2529 AND SR 2501

PARSONS BRINCKERHOFF
434 FAYETTEVILLE STREET
SUITE 1500
RALEIGH, NC 27601
LICENSE NO. F-0168

NORTH CAROLINA PROFESSIONAL SEAL 032967 ENGINEER JASON R. DOUGHTY
4/7/13

REVISIONS						SHEET NO.
NO.	BY:	DATE:	NO.	BY:	DATE:	S-1
1			3			TOTAL SHEETS
2			4			16

DRAWN BY : K. WHITE DATE : FEB 2012
CHECKED BY : J. DOUGHTY DATE : FEB 2012

TOTAL BILL OF MATERIAL

	REMOVAL OF EXISTING STRUCTURE AT STATION 12+92.04 -L-	PILE EXCAVATION IN SOIL	PILE EXCAVATION NOT IN SOIL	UNCLASSIFIED STRUCTURE EXCAVATION AT STATION 12+92.04 -L-	CLASS A CONCRETE	BRIDGE APPROACH SLABS	REINFORCING STEEL	HP 12x53 STEEL PILES		HP 14x73 GALVANIZED STEEL PILES		STEEL PILE POINTS	VERTICAL CONCRETE BARRIER RAIL	RIP RAP CLASS II (2'-0" THICK)	GEOTEXTILE FOR DRAINAGE	ELASTOMERIC BEARINGS	3'-0" x 1'-9" PRESTRESSED CONCRETE CORED SLABS		CONST, MAINT & REMOVAL OF TEMP. ACCESS
	LUMP SUM	LIN. FT.	LIN. FT.	LUMP SUM	CU. YDS.	LUMP SUM	LBS.	NO.	LIN. FT.	NO.	LIN. FT.	EA.	LIN. FT.	TONS	SQ. YDS.	LUMP SUM	NO.	LIN. FT.	LUMP SUM
SUPERSTRUCTURE	LUMP SUM					LUMP SUM							160.5			LUMP SUM	20	800.0	LUMP SUM
END BENT NO. 1				LUMP SUM	13.5		2039	5	55			5		123	124				
BENT NO. 1		45	49		10.6		2102			7	150								
END BENT NO. 2				LUMP SUM	13.5		2039	5	80			5		216	218				
TOTAL	LUMP SUM	45	49	LUMP SUM	37.6	LUMP SUM	6180	10	135	7	150	10	160.5	339	342	LUMP SUM	20	800.0	LUMP SUM

NOTES:

ASSUMED LIVE LOAD = HL 93 OR ALTERNATE LOADING.

THIS BRIDGE HAS BEEN DESIGNED IN ACCORDANCE WITH THE AASHTO LRFD BRIDGE DESIGN SPECIFICATIONS.

FOR OTHER DESIGN DATA AND GENERAL NOTES, SEE SHEET SN.

FOR EROSION CONTROL MEASURES SEE EROSION CONTROL PLANS.

THE EXISTING STRUCTURE CONSISTING OF ONE (1) 50'-6" SPAN, WITH A CLEAR ROADWAY WIDTH OF 20' AND A TIMBER DECK COVERED WITH ASPHALT SUPPORTED BY STEEL GIRDERS, ON TIMBER CAPS AND TIMBER PILES ENCASED WITH TIMBER BULKHEADS SHALL BE REMOVED. THE EXISTING BRIDGE IS PRESENTLY POSTED BELOW THE LEGAL LOAD LIMIT. SHOULD THE STRUCTURAL INTEGRITY OF THE BRIDGE FURTHER DETERIORATE, THIS LOAD LIMITATION MAY BE REDUCED AS FOUND NECESSARY DURING THE LIFE OF THE PROJECT.

REMOVAL OF THE EXISTING BRIDGE SHALL BE PERFORMED SO AS NOT TO ALLOW DEBRIS TO FALL INTO THE WATER. THE CONTRACTOR SHALL REMOVE THE BRIDGE AND SUBMIT PLANS FOR DEMOLITION IN ACCORDANCE WITH ARTICLE 402-2 OF THE STANDARD SPECIFICATIONS.

THE MATERIAL SHOWN IN THE CROSS-HATCHED AREA SHALL BE EXCAVATED FOR A DISTANCE OF 25 FT. EACH SIDE OF CENTERLINE ROADWAY AS DIRECTED BY THE ENGINEER. THIS WORK WILL BE PAID FOR AT THE CONTRACT LUMP SUM PRICE FOR UNCLASSIFIED STRUCTURE EXCAVATION. SEE SECTION 412 OF THE STANDARD SPECIFICATIONS.

THE SUBSTRUCTURE OF THE EXISTING BRIDGE INDICATED ON THE PLANS IS FROM THE BEST INFORMATION AVAILABLE. SINCE THIS INFORMATION IS SHOWN FOR THE CONVENIENCE OF THE CONTRACTOR, THE CONTRACTOR SHALL HAVE NO CLAIM WHATSOEVER AGAINST THE DEPARTMENT OF TRANSPORTATION FOR ANY DELAYS OR ADDITIONAL COST INCURRED BASED ON DIFFERENCES BETWEEN THE EXISTING BRIDGE SUBSTRUCTURE SHOWN ON THE PLANS AND THE ACTUAL CONDITIONS AT THE PROJECT SITE.

ASPHALT WEARING SURFACE IS INCLUDED IN ROADWAY QUANTITY ON ROADWAY PLANS.

THIS STRUCTURE HAS BEEN DESIGNED IN ACCORDANCE WITH HEC 18, "EVALUATING SCOUR AT BRIDGES", MAY, 2001.

THE CONTRACTOR SHALL PROVIDE INDEPENDENT ASSURANCE SAMPLES OF REINFORCING STEEL AS FOLLOWS: FOR PROJECTS REQUIRING UP TO 400 TONS OF REINFORCING STEEL, ONE 30 INCH SAMPLE OF EACH SIZE BAR USED, AND FOR PROJECTS REQUIRING OVER 400 TONS OF REINFORCING STEEL, TWO 30 INCH SAMPLES OF EACH SIZE BAR USED. THE BARS FROM WHICH THE SAMPLES ARE TAKEN MUST THEN BE SPLICED WITH REPLACEMENT BARS OF THE SIZE AND LENGTH OF THE SAMPLE, PLUS A MINIMUM LAP SPLICE OF THIRTY BAR DIAMETERS. PAYMENT FOR THE SAMPLES OF REINFORCING STEEL SHALL BE CONSIDERED INCIDENTAL TO VARIOUS PAY ITEMS.

INASMUCH AS THE PAINT SYSTEM ON THE EXISTING STRUCTURAL STEEL CONTAINS LEAD, THE CONTRACTOR'S ATTENTION IS DIRECTED TO ARTICLE 107-1 OF THE STANDARD SPECIFICATIONS. ANY COSTS RESULTING FROM COMPLIANCE WITH APPLICABLE STATE OR FEDERAL REGULATIONS PERTAINING TO HANDLING OF MATERIALS CONTAINING LEAD BASED PAINT SHALL BE INCLUDED IN THE BID PRICE FOR "REMOVAL OF EXISTING STRUCTURE AT STATION 12+92.04."

FOR UTILITY INFORMATION, SEE UTILITY PLANS AND SPECIAL PROVISIONS.

FOR SUBMITTAL OF WORKING DRAWINGS, SEE SPECIAL PROVISIONS.

FOR FALSEWORK AND FORMWORK, SEE SPECIAL PROVISIONS.

FOR CRANE SAFETY, SEE SPECIAL PROVISIONS.

FOR GROUT FOR STRUCTURES, SEE SPECIAL PROVISIONS.

AT THE CONTRACTOR'S OPTION, AND UPON REMOVAL OF THE CAUSEWAY, THE CLASS II RIP RAP USED IN THE CAUSEWAY MAY BE PLACED AS RIP RAP SLOPE PROTECTION. SEE SPECIAL PROVISIONS FOR CONSTRUCTION, MAINTENANCE AND REMOVAL OF TEMPORARY ACCESS AT STATION 12+92.04.

FOR PILES, SEE SECTION 450 OF THE STANDARD SPECIFICATIONS.

PILES AT END BENT NO. 1 ARE DESIGNED FOR A FACTORED RESISTANCE OF 55 TONS PER PILE.

PILES AT END BENT NO. 2 ARE DESIGNED FOR A FACTORED RESISTANCE OF 85 TONS PER PILE.

PILES AT BENT NO. 1 ARE DESIGNED FOR A FACTORED RESISTANCE OF 105 TONS PER PILE.

DRIVE PILES AT END BENT NO. 1 TO A REQUIRED DRIVING RESISTANCE OF 92 TONS PER PILE.

DRIVE PILES AT END BENT NO. 2 TO A REQUIRED DRIVING RESISTANCE OF 142 TONS PER PILE.

DRIVE PILES AT BENT NO. 1 TO A REQUIRED DRIVING RESISTANCE OF 175 TONS PER PILE.

STEEL H PILE POINTS ARE REQUIRED FOR STEEL H PILES AT END BENT NO. 1 AND END BENT NO. 2. FOR STEEL PILE POINTS, SEE SECTION 450 OF THE STANDARD SPECIFICATIONS.

PILE EXCAVATION IS REQUIRED TO INSTALL PILES AT BENT NO. 1. EXCAVATE HOLES AT PILE LOCATIONS TO AN ELEVATION NO HIGHER THAN 585 FEET AND HAVE A MINIMUM PILE EXCAVATION OF 7.0 FEET IN "NOT IN SOIL" AS DEFINED IN ARTICLE 450-4 OF THE STANDARD SPECIFICATIONS. FOR PILE EXCAVATION SEE ARTICLE 450-3 (E) OF THE STANDARD SPECIFICATIONS.

CONCRETE IS REQUIRED TO FILL HOLES FOR PILE EXCAVATION AT BENT NO. 1.

IT HAS BEEN ESTIMATED THAT A HAMMER WITH AN EQUIVALENT RATED ENERGY OF 30 TO 45 KIP-FT PER BLOW WILL BE REQUIRED TO DRIVE PILES AT END BENT NO. 1, END BENT NO. 2 AND BENT NO. 1. THE ESTIMATED ENERGY RANGE DOES NOT RELEASE THE CONTRACTOR FROM PROVIDING EQUIPMENT IN ACCORDANCE WITH SUBARTICLE 450-3(D)(2) OF THE STANDARD SPECIFICATIONS.

LOCATIONS OF EXISTING PILES ARE UNKNOWN. CONTRACTOR SHALL BE AWARE THAT EXISTING PILES MAY BE ENCOUNTERED DURING PILE EXCAVATION AT BENT NO. 1.

CONTROL POINT BL-2, STA. 13+29.69, 11.96' RT., EL. 604.16

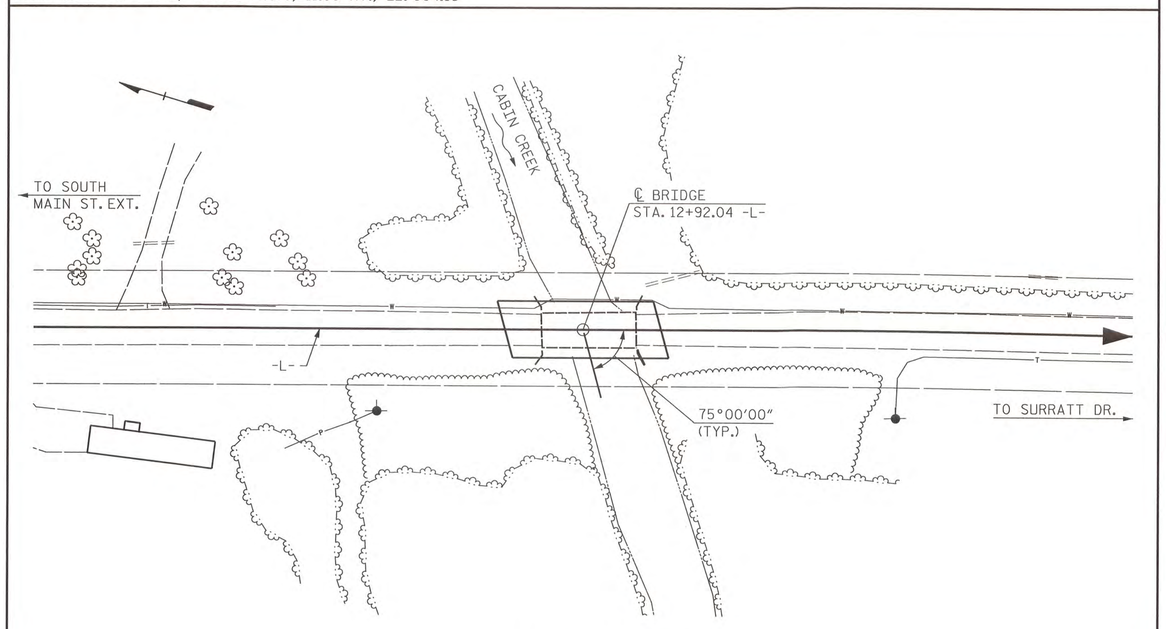

LOCATION SKETCH

PROJECT NO. BD-5109F

DAVIDSON COUNTY

STATION: 12+92.04 -L-

SHEET 2 OF 2

STATE OF NORTH CAROLINA
DEPARTMENT OF TRANSPORTATION
RALEIGH

GENERAL DRAWING
FOR BRIDGE ON SR 2533 OVER
CABIN CREEK BETWEEN
SR 2529 AND SR 2501

PARSONS BRINCKERHOFF
434 FAYETTEVILLE STREET
SUITE 1500
RALEIGH, NC 27601
LICENSE NO. F-0165

NORTH CAROLINA PROFESSIONAL SEAL 032967 ENGINEER JASON R. DOUGHTY
6/7/13

REVISIONS						SHEET NO.
NO.	BY:	DATE:	NO.	BY:	DATE:	S-2
1			3			TOTAL SHEETS
2			4			16

DRAWN BY : K. WHITE DATE : FEB 2012
CHECKED BY : J. DOUGHTY DATE : FEB 2012

LOAD AND RESISTANCE FACTOR RATING (LRFD) SUMMARY FOR PRESTRESSED CONCRETE GIRDERS

LEVEL		VEHICLE	WEIGHT (W) (TONS)	CONTROLLING LOAD RATING	MINIMUM RATING FACTORS (RF)	TONS = W X RF	STRENGTH I LIMIT STATE											SERVICE III LIMIT STATE						COMMENT NUMBER
								MOMENT					SHEAR						MOMENT					
							LIVELOAD FACTORS	DISTRIBUTION FACTORS (DF)	RATING FACTOR	SPAN	GIRDER LOCATION	DISTANCE FROM LEFT END OF SPAN (ft)	DISTRIBUTION FACTORS (DF)	RATING FACTOR	SPAN	GIRDER LOCATION	DISTANCE FROM LEFT END OF SPAN (ft)	LIVELOAD FACTORS	DISTRIBUTION FACTORS (DF)	RATING FACTOR	SPAN	GIRDER LOCATION	DISTANCE FROM LEFT END OF SPAN (ft)	
DESIGN LOAD RATING		HL-93(Inv)	N/A	1	1.233	--	1.75	0.279	2.57	25'	EL	11.982	0.637	**1.23**	25'	EL	**1.198**	0.80	0.279	2.37	25'	EL	11.982	
		HL-93(Opr)	N/A	--	1.598	--	1.35	0.279	3.34	25'	EL	11.982	0.637	1.6	25'	EL	1.198	N/A	--	--	--	--	--	
		HS-20(Inv)	36.000	2	1.428	51.406	1.75	0.279	3.82	25'	EL	11.982	0.637	**1.43**	25'	EL	**1.198**	0.80	0.279	3.52	25'	EL	11.982	
		HS-20(Opr)	36.000	--	1.851	66.637	1.35	0.279	4.95	25'	EL	11.982	0.637	1.85	25'	EL	1.198	N/A	--	--	--	--	--	
LEGAL LOAD RATING	SV	SNSH	13.500	--	3.307	44.639	1.4	0.279	6.95	25'	EL	11.982	0.637	3.31	25'	EL	1.198	0.80	0.279	5.11	25'	EL	11.982	
		SNGARBS2	20.000	--	2.65	53	1.4	0.279	6.5	25'	EL	11.982	0.637	2.65	25'	EL	1.198	0.80	0.279	4.79	25'	EL	11.982	
		SNAGRIS2	22.000	--	2.596	57.117	1.4	0.279	6.95	25'	EL	11.982	0.637	2.6	25'	EL	1.198	0.80	0.279	5.11	25'	EL	11.982	
		SNCOTTS3	27.250	--	1.678	45.729	1.4	0.279	3.64	25'	EL	11.982	0.637	1.68	25'	EL	1.198	0.80	0.279	2.68	25'	EL	11.982	
		SNAGGRS4	34.925	--	1.615	56.393	1.4	0.279	3.62	25'	EL	11.982	0.637	1.61	25'	EL	1.198	0.80	0.279	2.66	25'	EL	11.982	
		SNS5A	35.550	--	1.687	59.981	1.4	0.279	3.51	25'	EL	11.982	0.637	1.69	25'	EL	1.198	0.80	0.279	2.58	25'	EL	11.982	
		SNS6A	39.950	--	1.618	64.639	1.4	0.279	3.29	25'	EL	11.982	0.637	1.62	25'	EL	1.198	0.80	0.279	2.42	25'	EL	11.982	
		SNS7B	42.000	--	1.63	68.445	1.4	0.279	3.29	25'	EL	11.982	0.637	1.63	25'	EL	1.198	0.80	0.279	2.41	25'	EL	11.982	
	TTST	TNAGRIT3	33.000	--	1.982	65.415	1.4	0.279	4.64	25'	EL	11.982	0.637	1.98	25'	EL	1.198	0.80	0.279	3.41	25'	EL	11.982	
		TNT4A	33.075	--	1.798	59.466	1.4	0.279	4.02	25'	EL	11.982	0.637	1.8	25'	EL	1.198	0.80	0.279	2.96	25'	EL	11.982	
		TNT6A	41.600	--	1.694	70.481	1.4	0.279	3.78	25'	EL	11.982	0.637	1.69	25'	EL	1.198	0.80	0.279	2.78	25'	EL	11.982	
		TNT7A	42.000	--	1.687	70.851	1.4	0.279	3.9	25'	EL	11.982	0.637	1.69	25'	EL	1.198	0.80	0.279	2.87	25'	EL	11.982	
		TNT7B	42.000	--	1.628	68.365	1.4	0.279	3.52	25'	EL	11.982	0.637	1.63	25'	EL	1.198	0.80	0.279	2.59	25'	EL	11.982	
		TNAGRIT4	43.000	--	1.625	69.855	1.4	0.279	3.78	25'	EL	11.982	0.637	1.62	25'	EL	1.198	0.80	0.279	2.77	25'	EL	11.982	
		TNAGT5A	45.000	--	1.657	74.558	1.4	0.279	3.78	25'	EL	11.982	0.637	1.66	25'	EL	1.198	0.80	0.279	2.77	25'	EL	11.982	
		TNAGT5B	45.000	3	1.503	67.632	1.4	0.279	3.72	25'	EL	9.586	0.637	**1.5**	25'	EL	**1.198**	0.80	0.279	2.75	25'	EL	9.586	

LOAD FACTORS:

DESIGN LOAD RATING FACTORS	LIMIT STATE	γ_{DC}	γ_{DW}
	STRENGTH I	1.25	1.50
	SERVICE III	1.00	1.00

NOTES:

MINIMUM RATING FACTORS ARE BASED ON THE STRENGTH I AND SERVICE III LIMIT STATES.

ALLOWABLE STRESSES FOR SERVICE III LIMIT STATE ARE AS REQUIRED FOR DESIGN.

COMMENTS:

1.
2.
3.
4.

CONTROLLING LOAD RATING
1 DESIGN LOAD RATING (HL-93)
2 DESIGN LOAD RATING (HS-20)
3 LEGAL LOAD RATING **
** SEE CHART FOR VEHICLE TYPE

GIRDER LOCATION
I - INTERIOR GIRDER
EL - EXTERIOR LEFT GIRDER
ER - EXTERIOR RIGHT GIRDER

LRFR SUMMARY

FOR SPAN 'A'

PROJECT NO. BD-5109F

DAVIDSON COUNTY

STATION: 12+92.04-L-

SHEET 1 OF 2

STATE OF NORTH CAROLINA
DEPARTMENT OF TRANSPORTATION
RALEIGH

STANDARD

LRFR SUMMARY FOR 25' CORED SLAB UNIT 75° SKEW & 105° SKEW (NON-INTERSTATE TRAFFIC)

NORTH CAROLINA PROFESSIONAL SEAL 10730 ENGINEER D. ANDREW DAVENPORT, JR.

1-12-12

REVISIONS						SHEET NO.
NO.	BY:	DATE:	NO.	BY:	DATE:	S-3
1			3			TOTAL SHEETS
2			4			16

ASSEMBLED BY : D.A. DAVENPORT DATE : 01/10/12
CHECKED BY : G.W. DICKEY DATE : 01/11/12

DRAWN BY : CVC 6/10
CHECKED BY : DNS 6/10

12-JAN-2012 08:18
R:\Structures\BD5109F_SD_CS.dgn
ddavenport

STD. NO. 21LRFR1_75&105S_25L

LOAD AND RESISTANCE FACTOR RATING (LRFD) SUMMARY FOR PRESTRESSED CONCRETE GIRDERS

LEVEL		VEHICLE	WEIGHT (W) (TONS)	CONTROLLING LOAD RATING	MINIMUM RATING FACTORS (RF)	TONS = W X RF	STRENGTH I LIMIT STATE											SERVICE III LIMIT STATE						COMMENT NUMBER
								MOMENT					SHEAR						MOMENT					
							LIVELOAD FACTORS	DISTRIBUTION FACTORS (DF)	RATING FACTOR	SPAN	GIRDER LOCATION	DISTANCE FROM LEFT END OF SPAN (ft)	DISTRIBUTION FACTORS (DF)	RATING FACTOR	SPAN	GIRDER LOCATION	DISTANCE FROM LEFT END OF SPAN (ft)	LIVELOAD FACTORS	DISTRIBUTION FACTORS (DF)	RATING FACTOR	SPAN	GIRDER LOCATION	DISTANCE FROM LEFT END OF SPAN (ft)	
DESIGN LOAD RATING		HL-93(Inv)	N/A	1	1.065	--	1.75	0.27	1.25	55'	EL	26.982	0.616	1.12	55'	EL	5.396	0.80	0.27	**1.07**	55'	EL	**26.982**	
		HL-93(Opr)	N/A	--	1.452	--	1.35	0.27	1.61	55'	EL	26.982	0.616	1.45	55'	EL	5.396	N/A	--	--	--	--	--	
		HS-20(Inv)	36.000	2	1.335	48.043	1.75	0.27	1.56	55'	EL	26.982	0.616	1.34	55'	EL	5.396	0.80	0.27	**1.33**	55'	EL	**26.982**	
		HS-20(Opr)	36.000	--	1.734	62.425	1.35	0.27	2.02	55'	EL	26.982	0.616	1.73	55'	EL	5.396	N/A	--	--	--	--	--	
LEGAL LOAD RATING	SV	SNSH	13.500	--	2.802	37.83	1.4	0.27	4.09	55'	EL	26.982	0.616	3.81	55'	EL	5.396	0.80	0.27	2.80	55'	EL	26.982	
		SNGARBS2	20.000	--	2.175	43.506	1.4	0.27	3.18	55'	EL	26.982	0.616	2.76	55'	EL	5.396	0.80	0.27	2.18	55'	EL	26.982	
		SNAGRIS2	22.000	--	2.099	46.173	1.4	0.27	3.07	55'	EL	26.982	0.616	2.58	55'	EL	5.396	0.80	0.27	2.10	55'	EL	26.982	
		SNCOTTS3	27.250	--	1.397	38.065	1.4	0.27	2.04	55'	EL	26.982	0.616	1.91	55'	EL	5.396	0.80	0.27	1.40	55'	EL	26.982	
		SNAGGRS4	34.925	--	1.2	41.922	1.4	0.27	1.75	55'	EL	26.982	0.616	1.62	55'	EL	5.396	0.80	0.27	1.20	55'	EL	26.982	
		SNS5A	35.550	--	1.172	41.648	1.4	0.27	1.71	55'	EL	26.982	0.616	1.66	55'	EL	5.396	0.80	0.27	1.17	55'	EL	26.982	
		SNS6A	39.950	--	1.089	43.514	1.4	0.27	1.59	55'	EL	26.982	0.616	1.53	55'	EL	5.396	0.80	0.27	1.09	55'	EL	26.982	
		SNS7B	42.000	--	1.038	43.587	1.4	0.27	1.52	55'	EL	26.982	0.616	1.53	55'	EL	5.396	0.80	0.27	1.04	55'	EL	26.982	
	TTST	TNAGRIT3	33.000	--	1.333	43.973	1.4	0.27	1.95	55'	EL	26.982	0.616	1.81	55'	EL	5.396	0.80	0.27	1.33	55'	EL	26.982	
		TNT4A	33.075	--	1.342	44.4	1.4	0.27	1.96	55'	EL	26.982	0.616	1.75	55'	EL	5.396	0.80	0.27	1.34	55'	EL	26.982	
		TNT6A	41.600	--	1.112	46.252	1.4	0.27	1.62	55'	EL	26.982	0.616	1.67	55'	EL	5.396	0.80	0.27	1.11	55'	EL	26.982	
		TNT7A	42.000	--	1.125	47.255	1.4	0.27	1.64	55'	EL	26.982	0.616	1.56	55'	EL	5.396	0.80	0.27	1.13	55'	EL	26.982	
		TNT7B	42.000	--	1.174	49.318	1.4	0.27	1.72	55'	EL	26.982	0.616	1.47	55'	EL	5.396	0.80	0.27	1.17	55'	EL	26.982	
		TNAGRIT4	43.000	--	1.111	47.786	1.4	0.27	1.62	55'	EL	26.982	0.616	1.42	55'	EL	5.396	0.80	0.27	1.11	55'	EL	26.982	
		TNAGT5A	45.000	--	1.041	46.851	1.4	0.27	1.52	55'	EL	26.982	0.616	1.44	55'	EL	5.396	0.80	0.27	1.04	55'	EL	26.982	
		TNAGT5B	45.000	3	1.023	46.02	1.4	0.27	1.49	55'	EL	26.982	0.616	1.35	55'	EL	5.396	0.80	0.27	**1.02**	55'	EL	**26.982**	

LOAD FACTORS:

DESIGN LOAD RATING FACTORS	LIMIT STATE	γ_{DC}	γ_{DW}
	STRENGTH I	1.25	1.50
	SERVICE III	1.00	1.00

NOTES:

MINIMUM RATING FACTORS ARE BASED ON THE STRENGTH I AND SERVICE III LIMIT STATES.

ALLOWABLE STRESSES FOR SERVICE III LIMIT STATE ARE AS REQUIRED FOR DESIGN.

COMMENTS:

1.
2.
3.
4.

CONTROLLING LOAD RATING
(1) DESIGN LOAD RATING (HL-93)
(2) DESIGN LOAD RATING (HS-20)
(3) LEGAL LOAD RATING **
** SEE CHART FOR VEHICLE TYPE
GIRDER LOCATION
I - INTERIOR GIRDER
EL - EXTERIOR LEFT GIRDER
ER - EXTERIOR RIGHT GIRDER

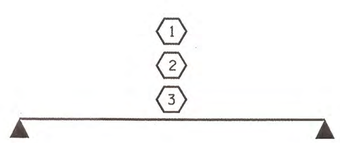

LRFR SUMMARY

FOR SPAN 'B'

PROJECT NO. BD-5109F

DAVIDSON COUNTY

STATION: 12+92.04-L-

SHEET 2 OF 2

STATE OF NORTH CAROLINA
DEPARTMENT OF TRANSPORTATION
RALEIGH

STANDARD
LRFR SUMMARY FOR
55' CORED SLAB UNIT
75° SKEW & 105° SKEW
(NON-INTERSTATE TRAFFIC)

NORTH CAROLINA PROFESSIONAL SEAL 10730 ENGINEER D. ANDRE DAVENPORT
1-12-12

REVISIONS						SHEET NO.
NO.	BY:	DATE:	NO.	BY:	DATE:	S-4
1			3			TOTAL SHEETS
2			4			16

ASSEMBLED BY : D.A. DAVENPORT DATE : 01/10/12
CHECKED BY : G.W. DICKEY DATE : 01/11/12

DRAWN BY : CVC 6/10
CHECKED BY : DNS 6/10

12-JAN-2012 08:18
R:\Structures\BD5109F_SD_CS.dgn
ddavenport

STD. NO. 21LRFR1_75&105S_55L

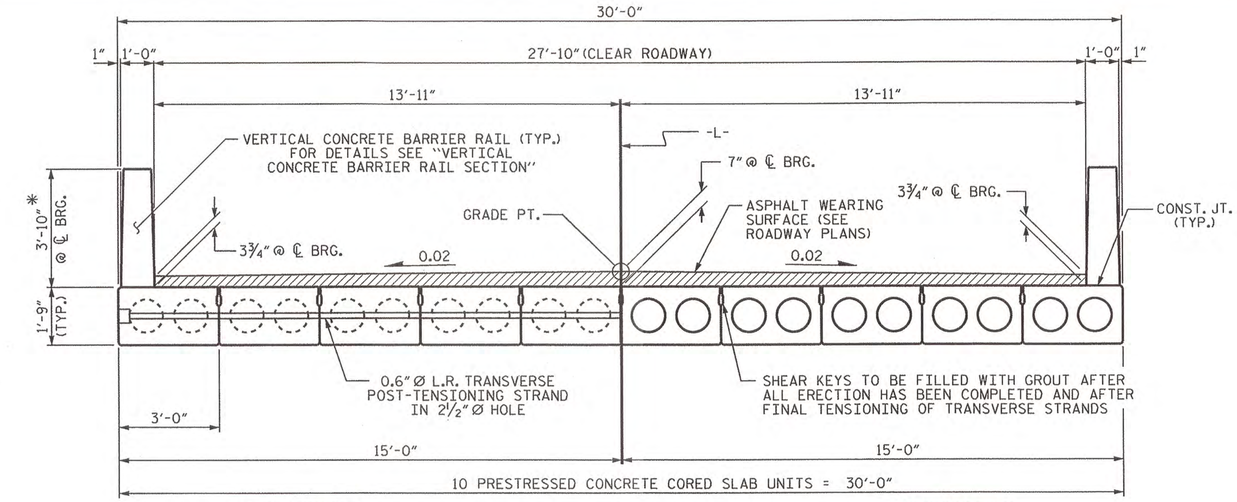

HALF SECTION
AT INTERMEDIATE DIAPHRAGMS

HALF SECTION
THROUGH VOIDS

TYPICAL SECTION

* - THE MAXIMUM BARRIER RAIL HEIGHT AND ASPHALT THICKNESS IS SHOWN. THE HEIGHT OF THE BARRIER RAIL AND ASPHALT THICKNESS VARIES WHILE THE TOP OF THE BARRIER RAIL FOLLOWS THE PROFILE OF THE GUTTERLINE. FOR RAIL HEIGHT DETAILS AND ASPHALT THICKNESS SEE THE "VERTICAL CONCRETE BARRIER RAIL SECTION" DETAIL.

FIXED END

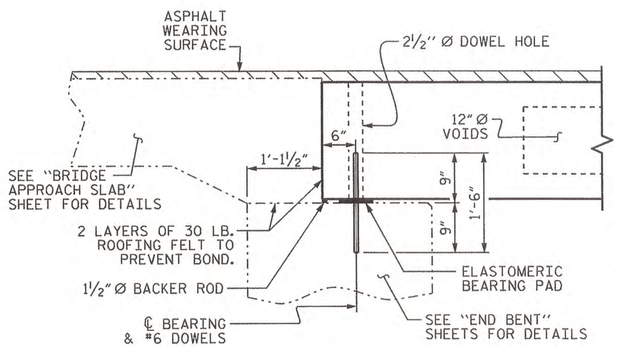

SECTION AT END BENT

FIXED END FIXED END

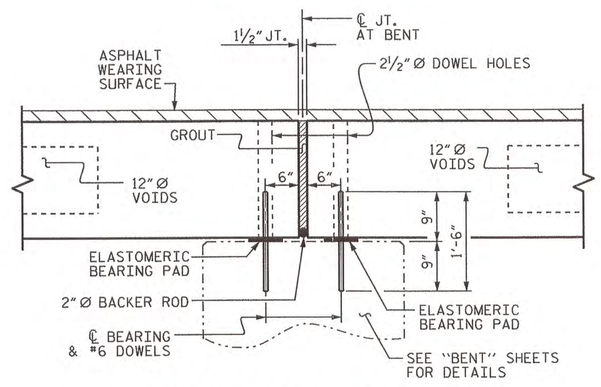

SECTION AT BENT

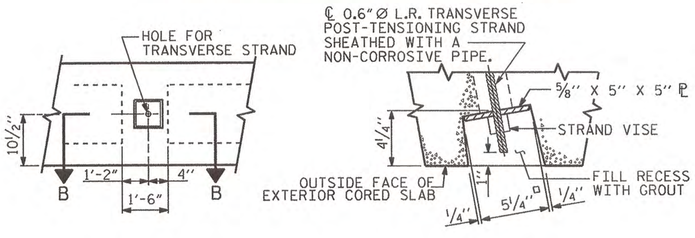

ELEVATION VIEW

SECTION B-B

GROUTED RECESS AT END OF POST-TENSIONED STRAND OF CORED SLABS

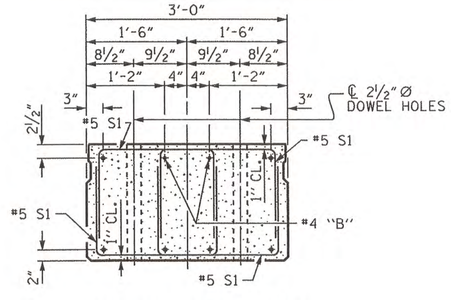

END ELEVATION

SHOWING PLACEMENT OF DOUBLE STIRRUPS AND LOCATION OF DOWEL HOLES. (STRAND LAYOUT NOT SHOWN.) INTERIOR SLAB UNIT SHOWN-EXTERIOR SLAB UNIT SIMILAR EXCEPT SHEAR KEY LOCATION.

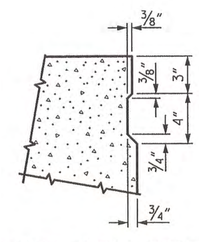

SHEAR KEY DETAIL

NOTE: OMIT SHEAR KEY ON OUTSIDE FACE OF EXTERIOR CORED SLABS.

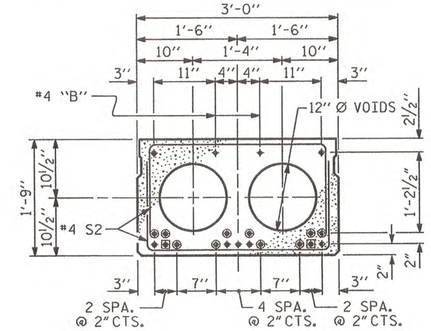

INTERIOR SLAB SECTION (25', 30' & 35' UNIT)

(9 STRANDS REQUIRED)

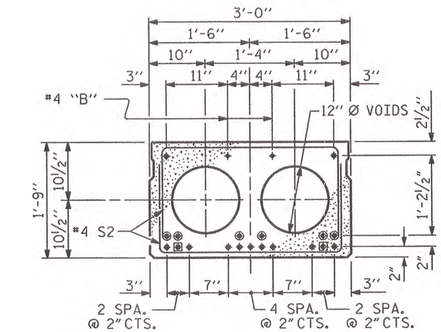

INTERIOR SLAB SECTION (40' & 45' UNIT)

(13 STRANDS REQUIRED)

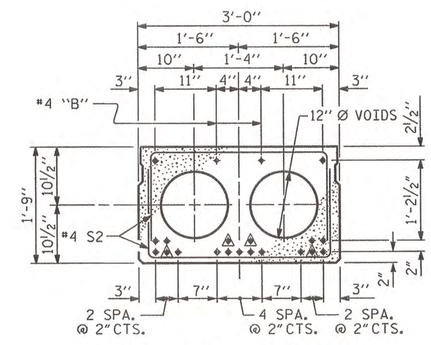

INTERIOR SLAB SECTION (50' & 55' UNIT)

(19 STRANDS REQUIRED)

0.6" Ø LOW RELAXATION STRAND LAYOUT

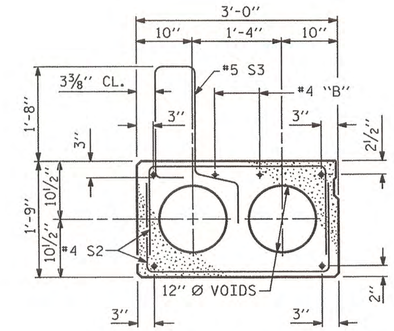

EXT. SLAB SECTION

(FOR PRESTRESSED STRAND LAYOUT, SEE INTERIOR SLAB SECTION.)

▲ BOND SHALL BE BROKEN ON THESE STRANDS FOR A DISTANCE OF 6'-0" FROM END OF CORED SLAB UNIT. SEE STANDARD SPECIFICATIONS, ARTICLE 1078-7.

■ BOND SHALL BE BROKEN ON THESE STRANDS FOR A DISTANCE OF 2'-0" FROM END OF CORED SLAB UNIT. SEE STANDARD SPECIFICATIONS, ARTICLE 1078-7.

● OPTIONAL FULL LENGTH DEBONDED STRANDS. THESE STRANDS ARE NOT REQUIRED. IF THE FABRICATOR CHOOSES TO INCLUDE THESE STRANDS IN THE CORED SLAB UNIT, THE STRANDS SHALL BE DEBONDED FOR THE FULL LENGTH OF THE UNIT AT NO ADDITIONAL COST. SEE STANDARD SPECIFICATIONS, ARTICLE 1078-7.

DEBONDING LEGEND

PROJECT NO. BD-5109F
DAVIDSON COUNTY
STATION: 12+92.04-L-

SHEET 1 OF 2

STATE OF NORTH CAROLINA
DEPARTMENT OF TRANSPORTATION
RALEIGH

STANDARD
3'-0" X 1'-9"
PRESTRESSED CONCRETE CORED SLAB UNIT
75° SKEW

NORTH CAROLINA PROFESSIONAL SEAL 10730 ENGINEER D. ANDREW DAVENPORT, JR.
1-12-12

ASSEMBLED BY D.A. DAVENPORT	DATE : 01/10/12
CHECKED BY : G.W. DICKEY	DATE : 01/11/12
DRAWN BY : DGE 5/09	REV. 12/11 MAA/AAC
CHECKED BY : BCH 6/09	

REVISIONS								SHEET NO.
NO.	BY:	DATE:	NO.	BY:	DATE:			S-5
1			3					TOTAL SHEETS
2			4					16

STD. NO. 21" PCS2_30_75S

12-JAN-2012 08:18
R:\Structures\BD5109F_SD_CS.dgn
ddavenport

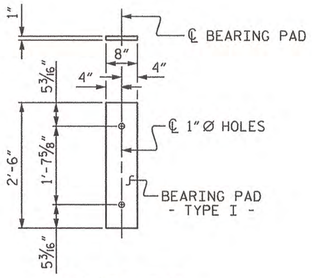

FIXED END
(TYPE I - 40 REQ'D)

ELASTOMERIC BEARING DETAILS

ELASTOMER IN ALL BEARINGS SHALL BE 50 DUROMETER HARDNESS.

GUTTERLINE ASPHALT THICKNESS & RAIL HEIGHT

27'-10" CLEAR ROADWAY	ASPHALT OVERLAY THICKNESS @ MID-SPAN NORMAL CROWN SECTION	RAIL HEIGHT @ MID-SPAN
25', 30' & 35' UNITS	3 3/8"	3'-9 5/8"
40' & 45' UNITS	2 5/8"	3'-8 7/8"
50' & 55' UNITS	1 1/2"	3'-7 3/4"

GRADE 270 STRANDS

	0.6" Ø L.R.
AREA (SQUARE INCHES)	0.217
ULTIMATE STRENGTH (LBS. PER STRAND)	58,600
APPLIED PRESTRESS (LBS. PER STRAND)	43,950

CORED SLABS REQUIRED

	NUMBER	LENGTH	TOTAL LENGTH
25' UNIT			
EXTERIOR C.S.	2	25'-0"	50'-0"
INTERIOR C.S.	8	25'-0"	200'-0"
TOTAL	10	-	250'-0"

CORED SLABS REQUIRED

	NUMBER	LENGTH	TOTAL LENGTH
55' UNIT			
EXTERIOR C.S.	2	55'-0"	110'-0"
INTERIOR C.S.	8	55'-0"	440'-0"
TOTAL	10	-	550'-0"

DEAD LOAD DEFLECTION AND CAMBER

	3'-0" x 1'-9" 0.6" Ø L.R. STRAND
25', 30' & 35' CORED SLAB UNIT	
CAMBER (SLAB ALONE IN PLACE)	1/2" ↑
DEFLECTION DUE TO SUPERIMPOSED DEAD LOAD**	1/8" ↓
FINAL CAMBER	3/8" ↑

** INCLUDES FUTURE WEARING SURFACE

DEAD LOAD DEFLECTION AND CAMBER

	3'-0" x 1'-9" 0.6" Ø L.R. STRAND
50' & 55' CORED SLAB UNIT	
CAMBER (SLAB ALONE IN PLACE)	2 1/2" ↑
DEFLECTION DUE TO SUPERIMPOSED DEAD LOAD**	1/4" ↓
FINAL CAMBER	2 1/4" ↑

** INCLUDES FUTURE WEARING SURFACE

BAR TYPES

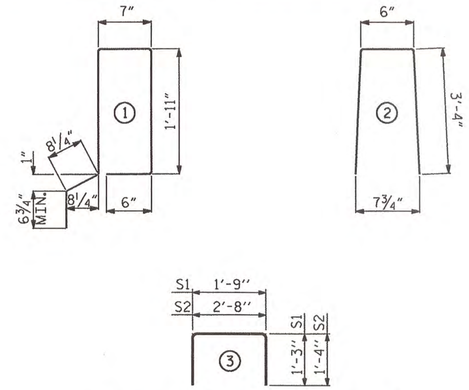

ALL BAR DIMENSIONS ARE OUT TO OUT

BILL OF MATERIAL FOR ONE 25' CORED SLAB UNIT

BAR	NUMBER	SIZE	TYPE	EXTERIOR UNIT LENGTH	EXTERIOR UNIT WEIGHT	INTERIOR UNIT LENGTH	INTERIOR UNIT WEIGHT
B1	2	#4	STR	24'-7"	33	24'-7"	33
S1	8	#5	3	4'-3"	35	4'-3"	35
S2	68	#4	3	5'-4"	242	5'-4"	242
* S3	34	#5	1	6'-2"	219		
REINFORCING STEEL			LBS.		310		310
* EPOXY COATED REINFORCING STEEL			LBS.		219		
5000 P.S.I. CONCRETE			CU. YDS.		3.8		3.8
0.6" Ø L.R. STRANDS			No.		9		9

BILL OF MATERIAL FOR ONE 55' CORED SLAB UNIT

BAR	NUMBER	SIZE	TYPE	EXTERIOR UNIT LENGTH	EXTERIOR UNIT WEIGHT	INTERIOR UNIT LENGTH	INTERIOR UNIT WEIGHT
B7	4	#4	STR	28'-3"	75	28'-3"	75
S1	8	#5	3	4'-3"	35	4'-3"	35
S2	128	#4	3	5'-4"	456	5'-4"	456
* S3	64	#5	1	6'-2"	412		
REINFORCING STEEL			LBS.		566		566
* EPOXY COATED REINFORCING STEEL			LBS.		412		
6500 P.S.I. CONCRETE			CU. YDS.		7.9		7.9
0.6" Ø L.R. STRANDS			No.		19		19

NOTES

ALL PRESTRESSING STRANDS SHALL BE 7-WIRE LOW RELAXATION GRADE 270 STRANDS AND SHALL CONFORM TO AASHTO M203 EXCEPT FOR SAMPLING REQUIREMENTS WHICH SHALL BE IN ACCORDANCE WITH THE STANDARD SPECIFICATIONS.

ALL REINFORCING STEEL CAST WITH THE CORED SLAB SECTIONS SHALL BE GRADE 60 AND SHALL BE INCLUDED IN THE UNIT PRICE BID FOR PRESTRESSED CONCRETE CORED SLABS.

RECESSES FOR TRANSVERSE STRANDS SHALL BE GROUTED AFTER THE TENSIONING OF THE STRANDS.

THE 2 1/2" Ø DOWEL HOLES AT FIXED ENDS OF SLAB SECTIONS SHALL BE FILLED WITH NON-SHRINK GROUT.

THE 2" Ø BACKER ROD SHALL CONFORM TO THE REQUIREMENTS OF TYPE M BOND BREAKER. SEE SECTION 1028 OF THE STANDARD SPECIFICATIONS.

WHEN CORED SLABS ARE CAST, AN INTERNAL HOLD-DOWN SYSTEM SHALL BE EMPLOYED TO PREVENT VOIDS FROM RISING OR MOVING SIDEWAYS. AT LEAST SIX WEEKS PRIOR TO CASTING CORED SLABS, THE CONTRACTOR SHALL SUBMIT TO THE ENGINEER FOR REVIEW AND COMMENT, DETAILED DRAWINGS OF THE PROPOSED HOLD-DOWN SYSTEM. IN ADDITION TO STRUCTURAL DETAILS, LOCATION AND SPACING OF THE HOLD-DOWNS SHALL BE INDICATED.

ALL REINFORCING STEEL IN THE VERTICAL CONCRETE BARRIER RAIL SHALL BE EPOXY COATED.

PRESTRESSING STRANDS SHALL BE CUT FLUSH WITH THE CORED SLAB UNIT ENDS.

APPLY EPOXY PROTECTIVE COATING TO CORED SLAB UNIT ENDS.

GROOVED CONTRACTION JOINTS, 1/2" IN DEPTH, SHALL BE TOOLED IN ALL EXPOSED FACES OF THE BARRIER RAIL AND IN ACCORDANCE WITH ARTICLE 825-10(B) OF THE STANDARD SPECIFICATIONS. A CONTRACTION JOINT SHALL BE LOCATED AT EACH THIRD POINT BETWEEN BARRIER RAIL EXPANSION JOINTS. ONLY ONE CONTRACTION JOINT IS REQUIRED AT MIDPOINT OF BARRIER RAIL SEGMENTS LESS THAN 20 FEET IN LENGTH AND NO CONTRACTION JOINTS ARE REQUIRED FOR THOSE SEGMENTS LESS THAN 10 FEET IN LENGTH.

TRANSVERSE POST TENSIONING OF THE CORED SLAB UNITS SHALL BE DONE IN ACCORDANCE WITH THE STANDARD SPECIFICATIONS.

THE TRANSFER OF LOAD FROM THE ANCHORAGES TO THE CORED SLAB UNIT SHALL BE DONE WHEN THE CONCRETE HAS REACHED A COMPRESSIVE STRENGTH OF NOT LESS THAN THE REQUIRED STRENGTH SHOWN IN THE "CONCRETE RELEASE STRENGTH" TABLE.

FOR GROUT FOR STRUCTURES, SEE SPECIAL PROVISIONS.

CONCRETE RELEASE STRENGTH

UNIT	PSI
25', 30' & 35' UNITS	4000
40' & 45' UNITS	4000
50' & 55' UNITS	4900

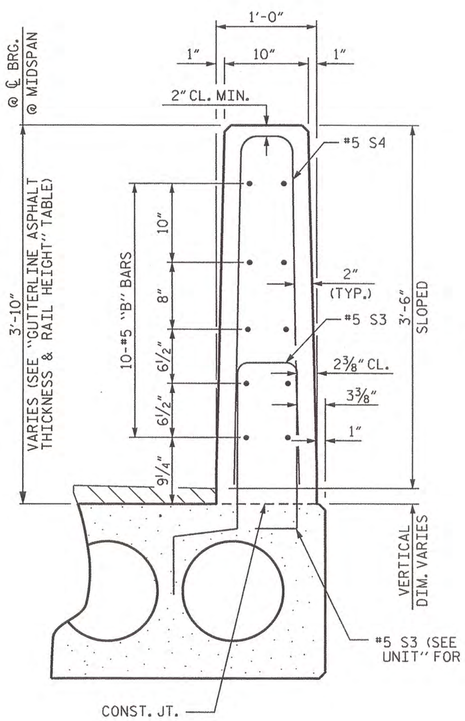

VERTICAL CONCRETE BARRIER RAIL SECTION

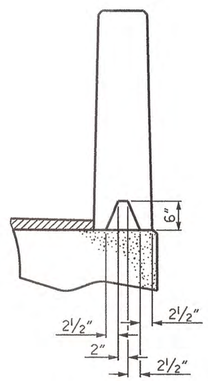

SECTION S-S
AT DAM IN OPEN JOINT
(THIS IS TO BE USED ONLY WHEN SLIP FORM IS USED)

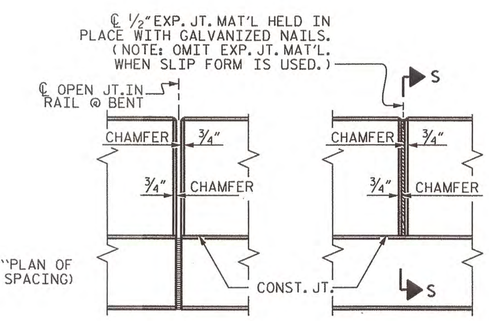

ELEVATION AT EXPANSION JOINTS

BILL OF MATERIAL FOR VERTICAL CONCRETE BARRIER RAIL

BAR	BARS PER PAIR OF EXTERIOR UNITS	TOTAL NO.	SIZE	TYPE	LENGTH	WEIGHT
	25' UNIT					
* B8	20	20	#5	STR	24'-6"	511
* S4	68	68	#5	2	7'-2"	508
* EPOXY COATED REINFORCING STEEL				LBS.		1019
CLASS AA CONCRETE				CU.YDS.		6.6
TOTAL VERTICAL CONCRETE BARRIER RAIL				LN. FT.		50.25

BILL OF MATERIAL FOR VERTICAL CONCRETE BARRIER RAIL

BAR	BARS PER PAIR OF EXTERIOR UNITS	TOTAL NO.	SIZE	TYPE	LENGTH	WEIGHT
	55' UNIT					
* B14	80	80	#5	STR	15'-5"	1286
* S4	128	128	#5	2	7'-2"	957
* EPOXY COATED REINFORCING STEEL				LBS.		2243
CLASS AA CONCRETE				CU.YDS.		14.4
TOTAL VERTICAL CONCRETE BARRIER RAIL				LN. FT.		110.25

NORTH CAROLINA PROFESSIONAL SEAL 10730 ENGINEER D. ANDRE DAVENPORT
1/9/12

PROJECT NO. BD-5109F
DAVIDSON COUNTY
STATION: 12+92.04-L-

SHEET 2 OF 2

STATE OF NORTH CAROLINA
DEPARTMENT OF TRANSPORTATION
RALEIGH

STANDARD
3'-0" X 1'-9"
PRESTRESSED CONCRETE
CORED SLAB UNIT
75° SKEW

REVISIONS						SHEET NO.
NO.	BY:	DATE:	NO.	BY:	DATE:	S-6
1			3			TOTAL SHEETS
2			4			16

ASSEMBLED BY D.A. DAVENPORT DATE : 01/10/12
CHECKED BY : G.W. DICKEY DATE : 01/11/12
DRAWN BY : DGE 5/09
CHECKED BY : BCH 6/09
REV. 12/11 MAA/AAC

12-JAN-2012 08:18
R:\Structures\BD5109F_SD_CS.dgn
ddavenport

STD. NO. 21" PCS3_30_75S

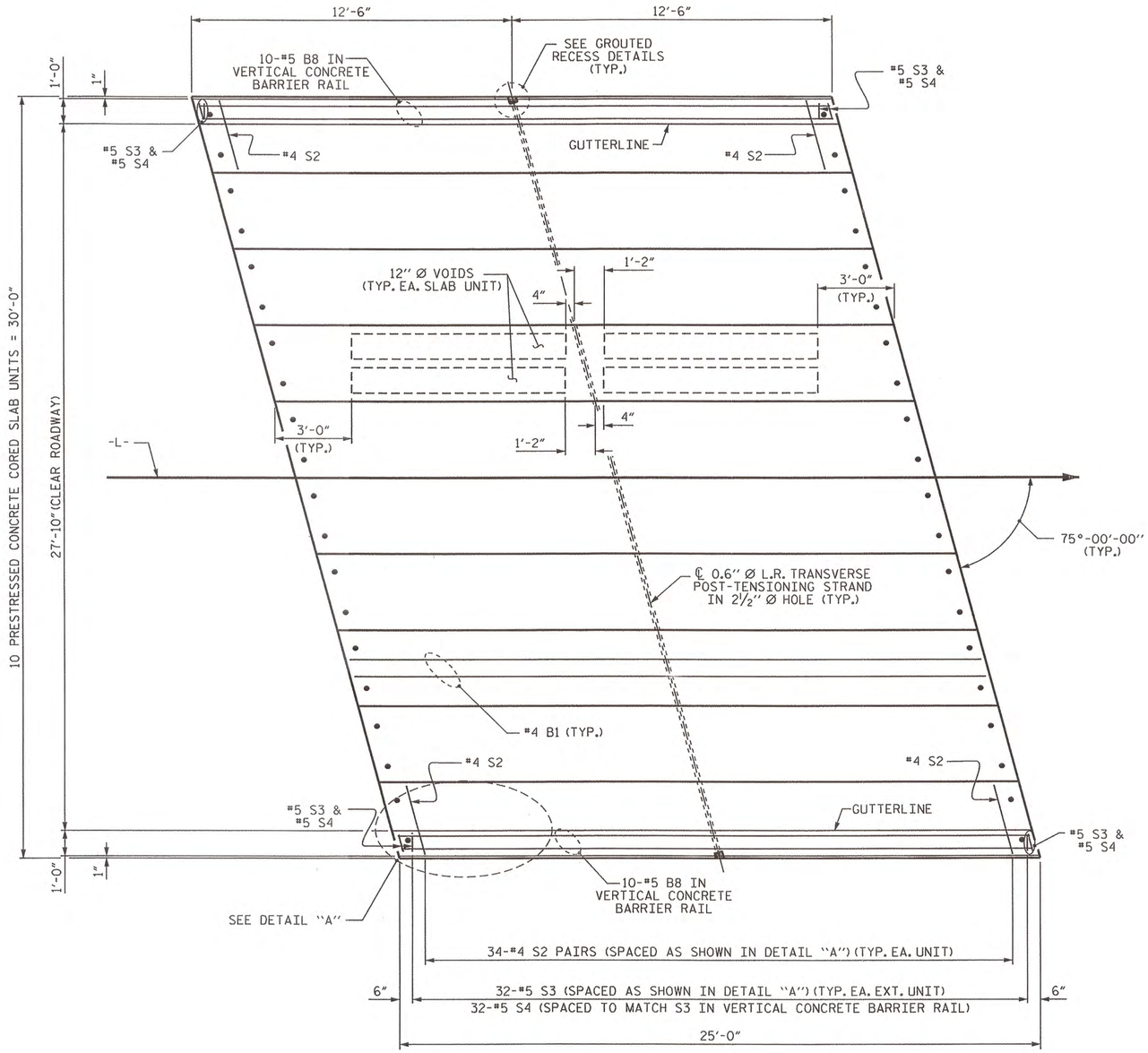

PLAN OF UNIT

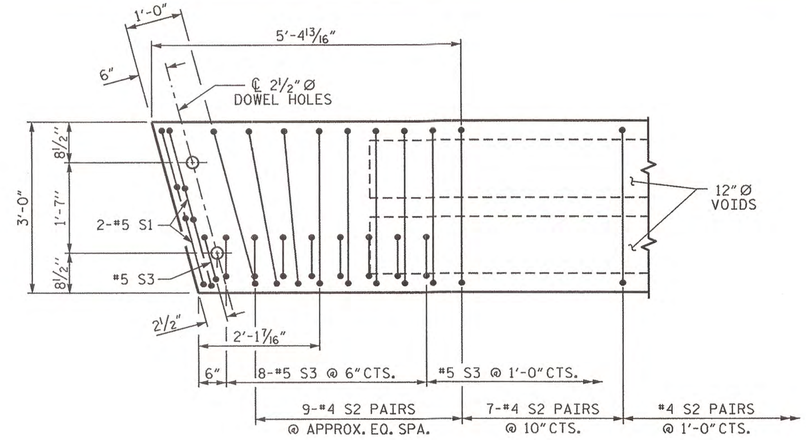

DETAIL "A"

NOTE: EXTERIOR UNIT SHOWN - INTERIOR UNIT SIMILAR EXCEPT OMIT #5 S3 BARS.

PROJECT NO. BD-5109F

DAVIDSON COUNTY

STATION: 12+92.04-L-

SHEET 1 OF 2

STATE OF NORTH CAROLINA
DEPARTMENT OF TRANSPORTATION
RALEIGH

PLAN OF 25' UNIT 27'-10" CLEAR ROADWAY 75° SKEW

NORTH CAROLINA PROFESSIONAL SEAL 10730 ENGINEER D. ANDREW DAVENPORT
1/12/12

REVISIONS						SHEET NO.
NO.	BY:	DATE:	NO.	BY:	DATE:	S-7
1			3			TOTAL SHEETS
2			4			16

STD. NO. 21" PCS_30_75S_25L

ASSEMBLED BY: D.A. DAVENPORT		DATE: 01/10/12	
CHECKED BY: G.W. DICKEY		DATE: 01/11/12	
DRAWN BY: DGE	3/09	REV. 12/5/11	MAA/AAC
CHECKED BY: BCH	3/09		

12-JAN-2012 08:19
R:\Structures\BD5109F_SD_CS.dgn
ddavenport

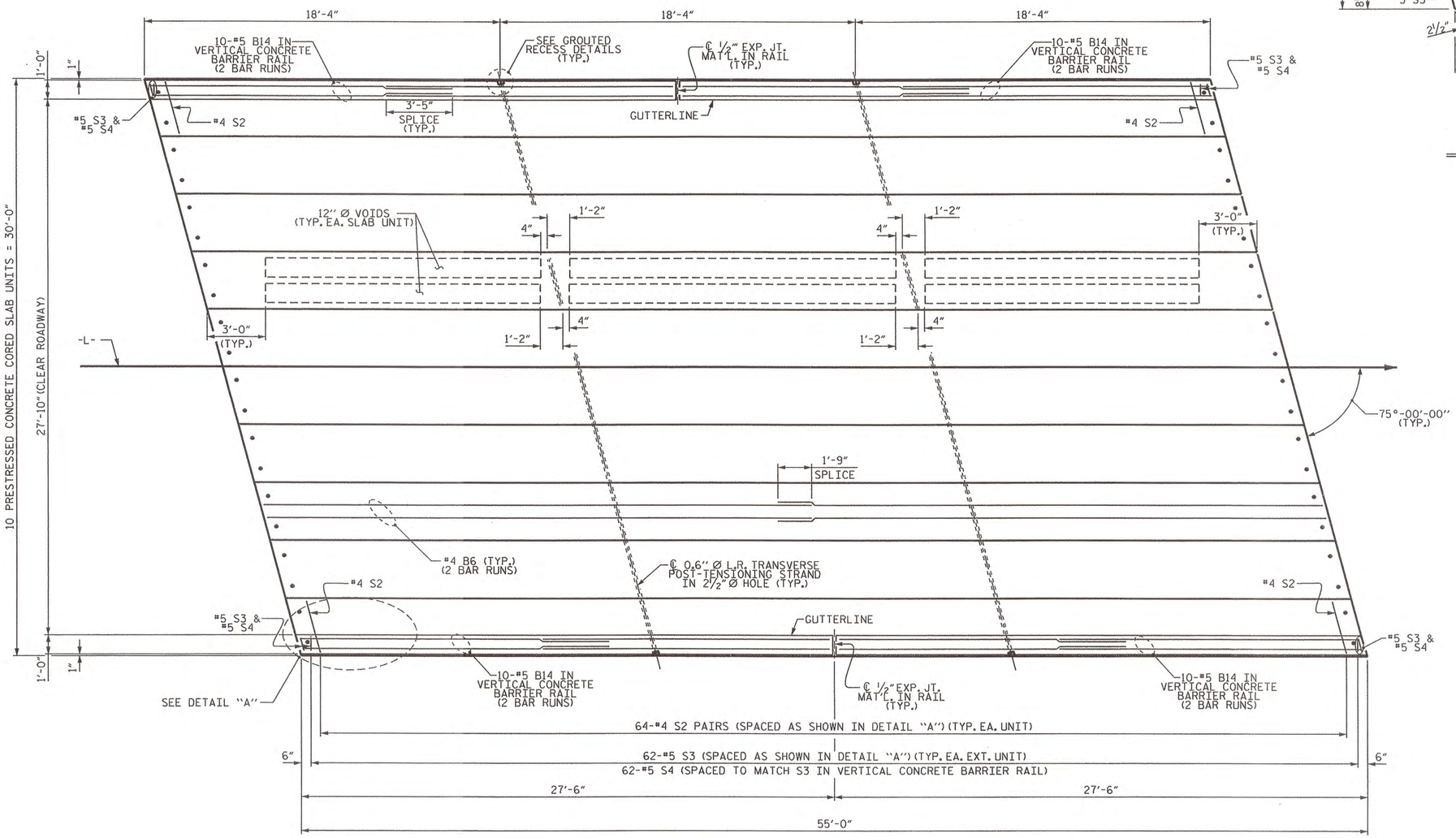

PLAN OF UNIT

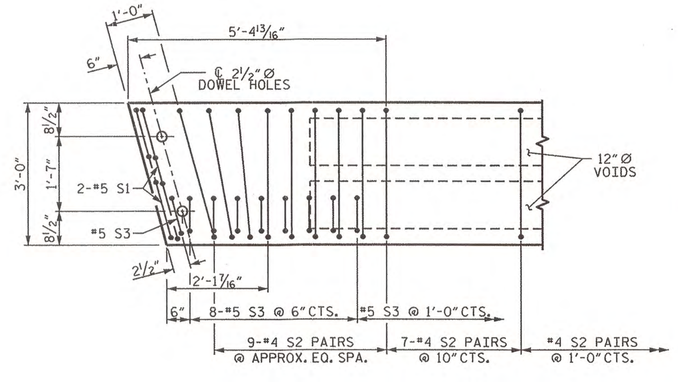

DETAIL "A"

NOTE: EXTERIOR UNIT SHOWN - INTERIOR UNIT SIMILAR EXCEPT OMIT #5 S3 BARS.

PROJECT NO. BD-5109F

DAVIDSON COUNTY

STATION: 12+92.04-L-

SHEET 2 OF 2

STATE OF NORTH CAROLINA
DEPARTMENT OF TRANSPORTATION
RALEIGH

PLAN OF 55' UNIT
27'-10" CLEAR ROADWAY
75° SKEW

NORTH CAROLINA PROFESSIONAL SEAL 10730 ENGINEER D. ANDREW DAVENPORT, JR.
1/10/12

REVISIONS						SHEET NO.
NO.	BY:	DATE:	NO.	BY:	DATE:	S-8
1			3			TOTAL SHEETS
2			4			16

ASSEMBLED BY : D.A. DAVENPORT		DATE : 01/10/12	
CHECKED BY : G.W. DICKEY		DATE : 01/11/12	
DRAWN BY : DGE 5/09	REV. 12/5/11 MAA/AAC		
CHECKED BY: BCH 6/09			

STD. NO. 21" PCS_30_75S_55L

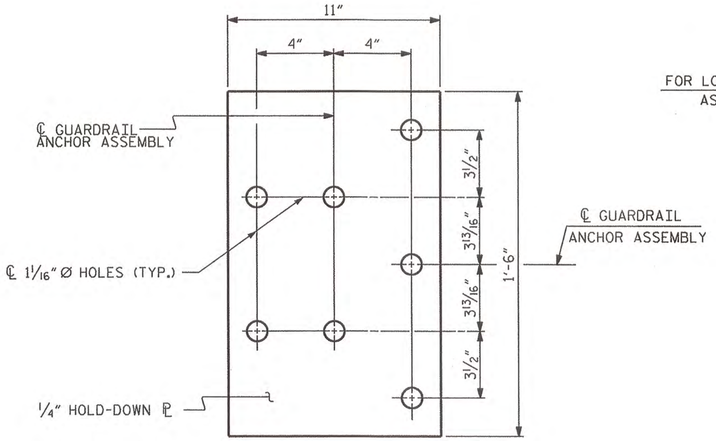

PLAN

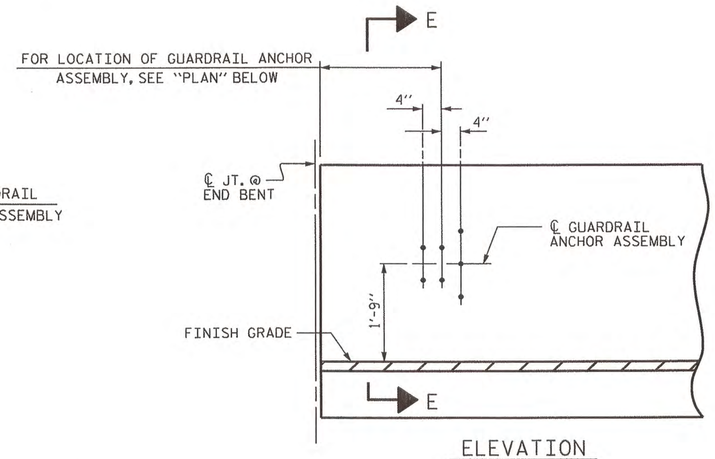

ELEVATION

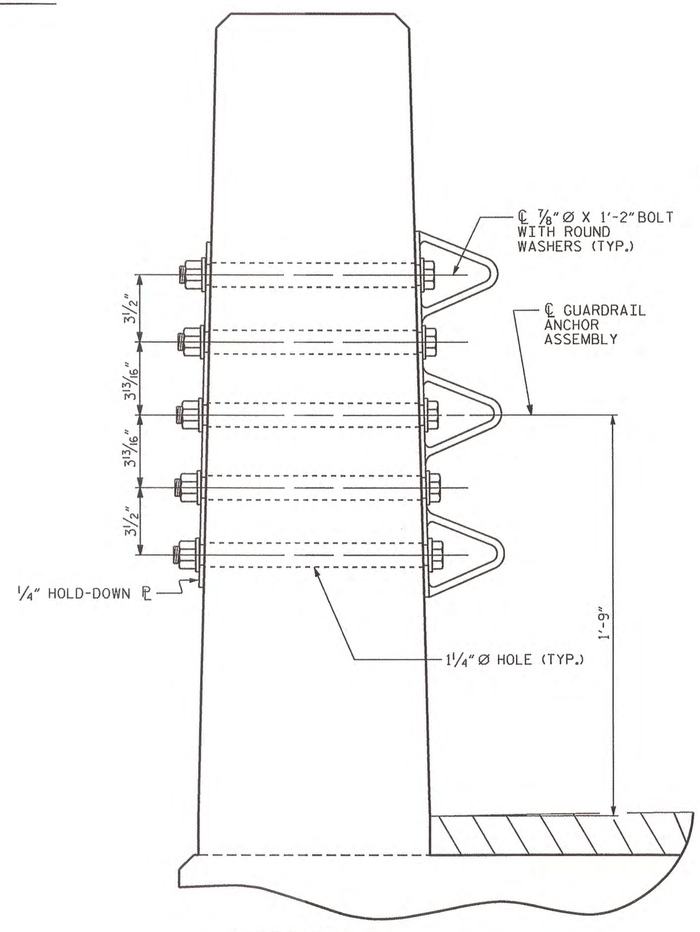

SECTION E-E

GUARDRAIL ANCHOR ASSEMBLY DETAILS

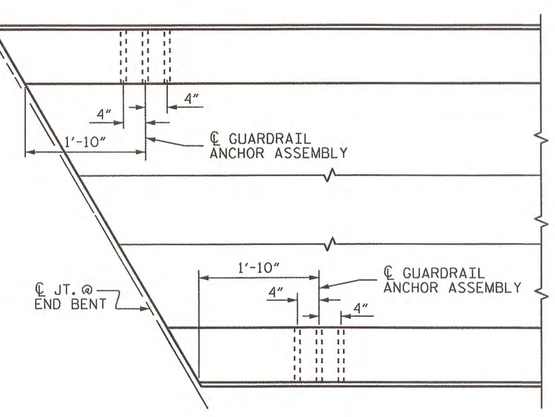

PLAN

LOCATION OF ANCHORS FOR GUARDRAIL

END BENT #1 SHOWN, END BENT #2 SIMILAR.

NOTES

THE GUARDRAIL ANCHOR ASSEMBLY SHALL CONSIST OF A 1/4" HOLD DOWN PLATE AND 7 - 7/8" Ø BOLTS WITH NUTS AND WASHERS.

THE HOLD-DOWN PLATE SHALL CONFORM TO AASHTO M270 GRADE 36. AFTER FABRICATION, THE HOLD-DOWN PLATE SHALL BE HOT-DIP GALVANIZED IN ACCORDANCE WITH AASHTO M111.

BOLTS SHALL CONFORM TO THE REQUIREMENTS OF ASTM A307 AND NUTS SHALL CONFORM TO THE REQUIREMENTS OF AASHTO M291. BOLTS, NUTS AND WASHERS SHALL BE GALVANIZED. (AT THE CONTRACTOR'S OPTION, STAINLESS STEEL BOLTS, NUTS AND WASHERS MAY BE USED AS AN ALTERNATE FOR THE 7/8" Ø GALVANIZED BOLTS, NUTS AND WASHERS. THEY SHALL CONFORM TO OR EXCEED THE MECHANICAL REQUIREMENTS OF ASTM A307. THE USE OF THIS ALTERNATE SHALL BE APPROVED BY THE ENGINEER.)

THE GUARDRAIL ANCHOR ASSEMBLY IS REQUIRED AT ALL POINTS WHERE APPROACH GUARDRAIL IS TO BE ATTACHED TO THE END OF BARRIER RAIL. FOR POINTS OF ATTACHMENT, SEE SKETCH.

AFTER INSTALLATION, THE EXPOSED THREAD OF THE BOLT SHALL BE BURRED WITH A SHARP POINTED TOOL.

THE COST OF THE GUARDRAIL ANCHOR ASSEMBLY SHALL BE INCLUDED IN THE UNIT CONTRACT PRICE BID FOR VERTICAL CONCRETE BARRIER RAIL.

THE VERTICAL REINFORCING BARS MAY BE SHIFTED SLIGHTLY IN THE VERTICAL CONCRETE BARRIER RAIL TO CLEAR ASSEMBLY BOLTS.

THE 1 1/4" Ø HOLES SHALL BE FORMED OR DRILLED WITH A CORE BIT. IMPACT TOOLS WILL NOT BE PERMITTED. ANY CONCRETE DAMAGED BY THIS WORK SHALL BE REPAIRED TO THE SATISFACTION OF THE ENGINEER.

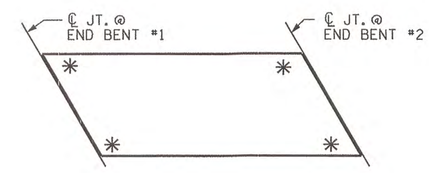

SKETCH SHOWING POINTS OF ATTACHMENT

✳ DENOTES GUARDRAIL ANCHOR ASSEMBLY

PROJECT NO. BD-5109F
DAVIDSON COUNTY
STATION: 12+92.04-L-

STATE OF NORTH CAROLINA
DEPARTMENT OF TRANSPORTATION
RALEIGH

STANDARD
GUARDRAIL ANCHORAGE FOR VERTICAL CONCRETE BARRIER RAIL

NORTH CAROLINA PROFESSIONAL SEAL 10730 ENGINEER D. ANDREW DAVENPORT
1/12/12

REVISIONS						SHEET NO.
NO.	BY:	DATE:	NO.	BY:	DATE:	S-9
1			3			TOTAL SHEETS
2			4			16

ASSEMBLED BY : D.A. DAVENPORT	DATE : 01/10/12	
CHECKED BY : C.W. DICKEY	DATE : 01/11/12	
DRAWN BY : MAA 5/10	ADDED 5/6/10	
CHECKED BY : GM 5/10	REV. 10/1/11	MAA/GM
	REV. 12/5/11	MAA/GM

12-JAN-2012 08:19
R:\Structures\BD5109F_SD_CS.dgn
ddavenport

(SHT 3) STD. NO. GRA3

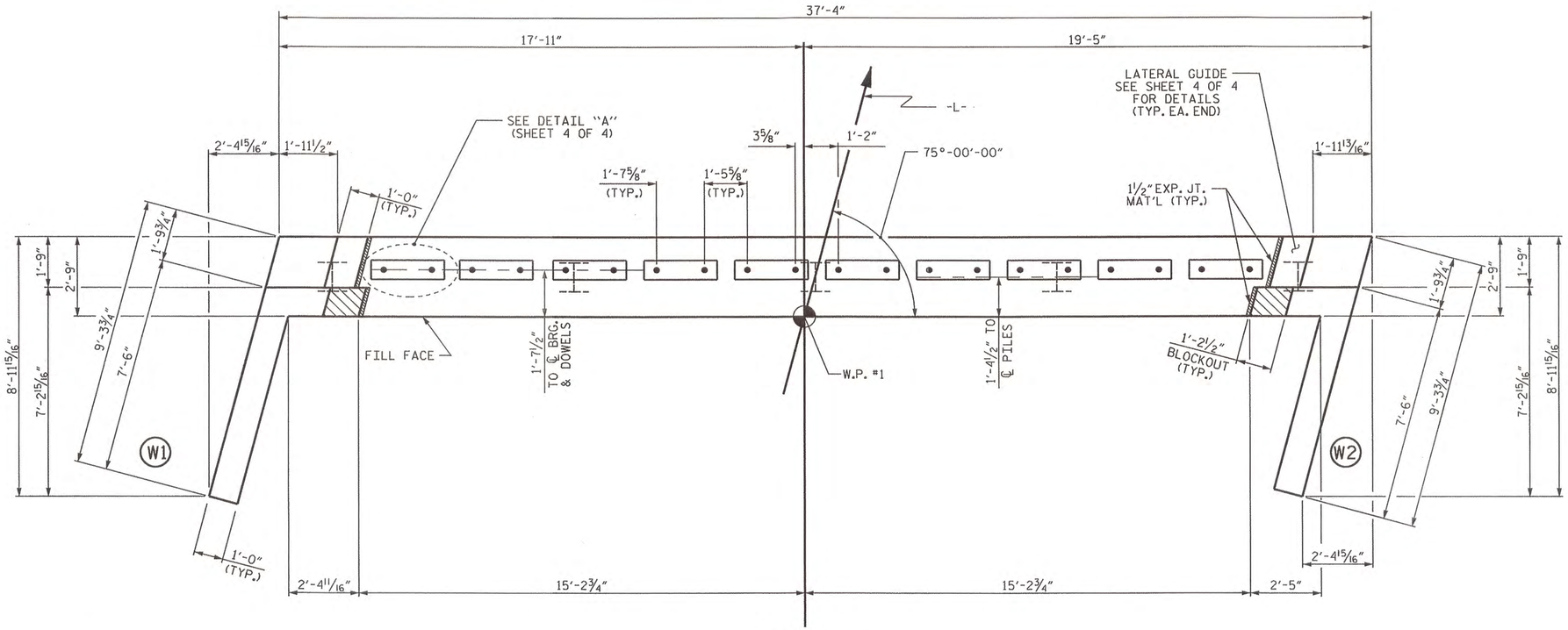

PLAN

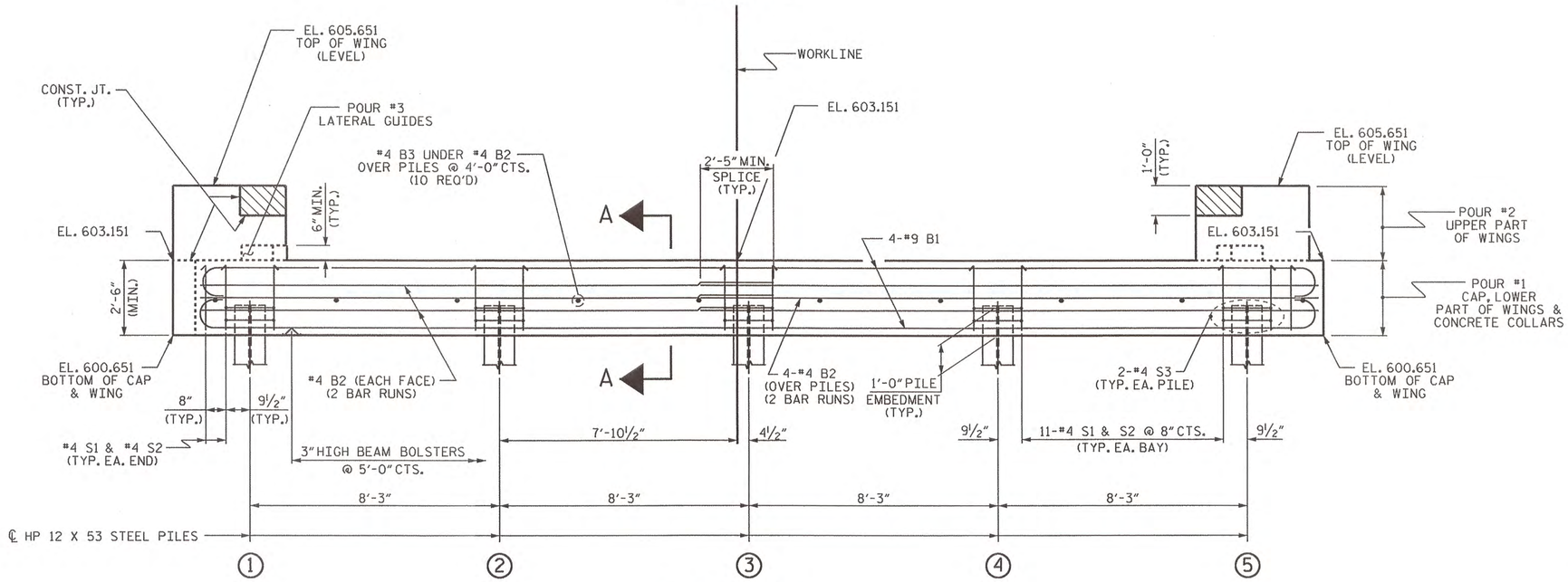

ELEVATION

WINGS NOT SHOWN FOR CLARITY.
FOR SECTION A-A, SEE SHEET 4 OF 4.
CONCRETE COLLARS FOR STEEL PILES NOT SHOWN IN PLAN AND ELEVATION VIEWS FOR CLARITY.
SEE "CORROSION PROTECTION FOR STEEL PILES DETAIL", SHEET 4 OF 4.

NOTES

STIRRUPS IN CAP MAY BE SHIFTED AS NECESSARY TO CLEAR DOWELS.

THE LATERAL GUIDES ARE NOT TO BE POURED UNTIL AFTER THE CORED SLAB UNITS ARE IN PLACE.

THE CONCRETE IN THE SHADED AREA OF THE WING SHALL BE POURED AFTER THE VERTICAL CONCRETE BARRIER RAIL IS CAST IF SLIP FORMING IS USED.

FOR PILE SPLICE DETAILS, SEE SHEET 4 OF 4.

FOR WING DETAILS, SEE SHEET 3 OF 4.

THE CONTRACTOR HAS THE OPTION TO OMIT THE LATERAL GUIDE IF APPROVED BY THE ENGINEER.

PROJECT NO. BD-5109F
DAVIDSON COUNTY
STATION: 12+92.04-L-

SHEET 1 OF 4

STATE OF NORTH CAROLINA
DEPARTMENT OF TRANSPORTATION
RALEIGH

SUBSTRUCTURE

END BENT No. 1

NORTH CAROLINA PROFESSIONAL SEAL 10730 ENGINEER D. AUDREY DAVENPORT, JR.
1/12/12

REVISIONS						SHEET NO.
NO.	BY:	DATE:	NO.	BY:	DATE:	S-10
1			3			TOTAL SHEETS
2			4			16

ASSEMBLED BY : D.A. DAVENPORT DATE : 01/10/12
CHECKED BY : G.W. DICKEY DATE : 01/11/12

DRAWN BY : DGE 03/10
CHECKED BY : MKT 03/10

12-JAN-2012 08:19
R:\Structures\BD5109F_SD_CS.dgn
ddavenport

STD. NO. EB_30_75S

NOTES

STIRRUPS IN CAP MAY BE SHIFTED AS NECESSARY TO CLEAR DOWELS.

THE LATERAL GUIDES ARE NOT TO BE POURED UNTIL AFTER THE CORED SLAB UNITS ARE IN PLACE.

THE CONCRETE IN THE SHADED AREA OF THE WING SHALL BE POURED AFTER THE VERTICAL CONCRETE BARRIER RAIL IS CAST IF SLIP FORMING IS USED.

FOR PILE SPLICE DETAILS, SEE SHEET 4 OF 4.

FOR WING DETAILS, SEE SHEET 3 OF 4.

THE CONTRACTOR HAS THE OPTION TO OMIT THE LATERAL GUIDE IF APPROVED BY THE ENGINEER.

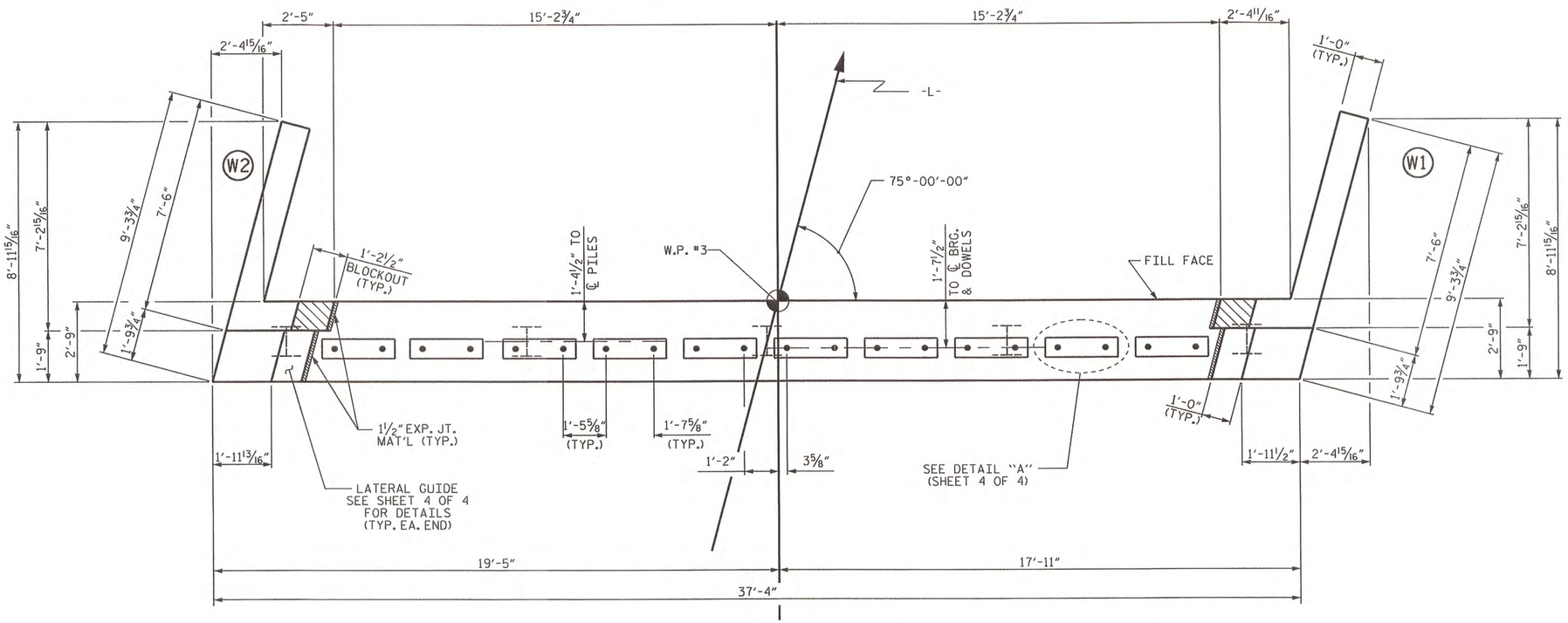

PLAN

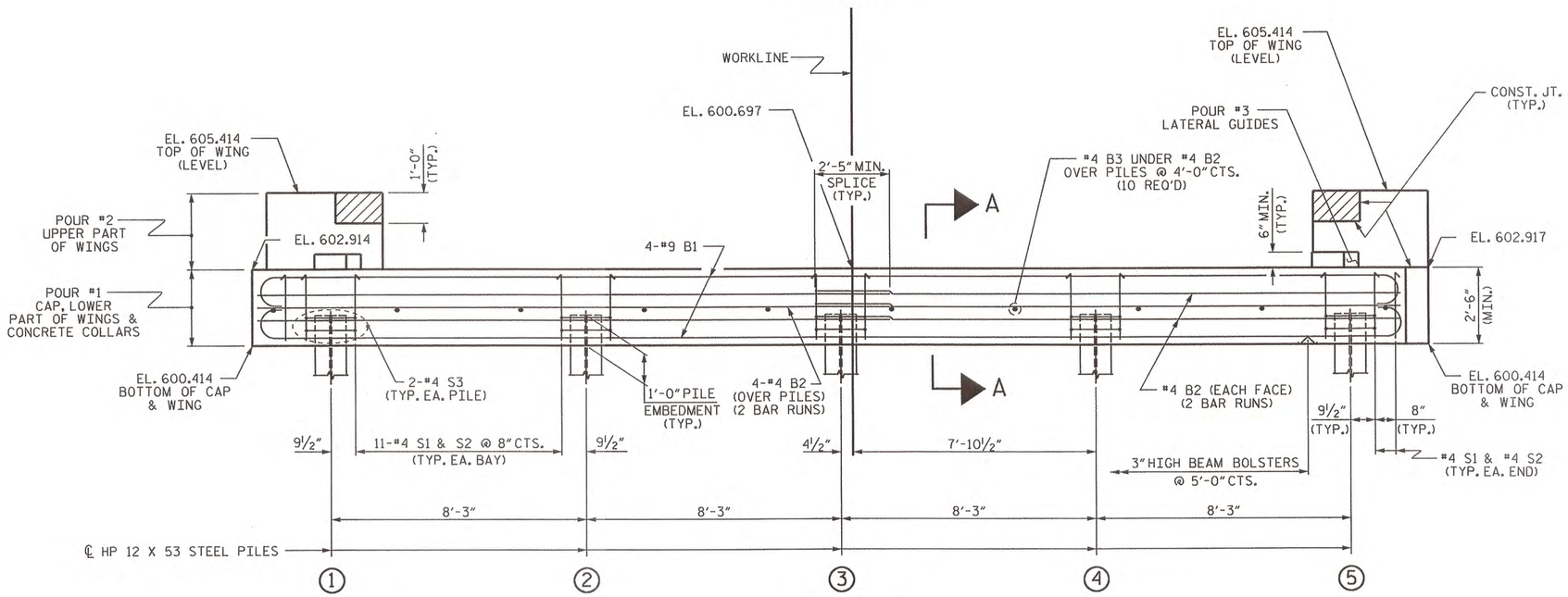

ELEVATION

WINGS NOT SHOWN FOR CLARITY.
FOR SECTION A-A, SEE SHEET 4 OF 4.
CONCRETE COLLARS FOR STEEL PILES NOT SHOWN IN PLAN AND ELEVATION VIEWS FOR CLARITY.
SEE "CORROSION PROTECTION FOR STEEL PILES DETAIL", SHEET 4 OF 4.

PROJECT NO. BD-5109F
DAVIDSON COUNTY
STATION: 12+92.04-L-

SHEET 2 OF 4

STATE OF NORTH CAROLINA
DEPARTMENT OF TRANSPORTATION
RALEIGH

SUBSTRUCTURE

END BENT No. 2

NORTH CAROLINA PROFESSIONAL SEAL 10730 ENGINEER D. ANDRE DAVENPORT JR.
1/12/12

REVISIONS						SHEET NO.
NO.	BY:	DATE:	NO.	BY:	DATE:	S-11
1			3			TOTAL SHEETS
2			4			16

ASSEMBLED BY : D.A. DAVENPORT DATE : 01/10/12
CHECKED BY : G.W. DICKEY DATE : 01/11/12

DRAWN BY : DGE 03/10
CHECKED BY : MKT 03/10

12-JAN-2012 08:20
R:\Structures\BD5109F_SD_CS.dgn
ddavenport

STD. NO. EB_30_75S

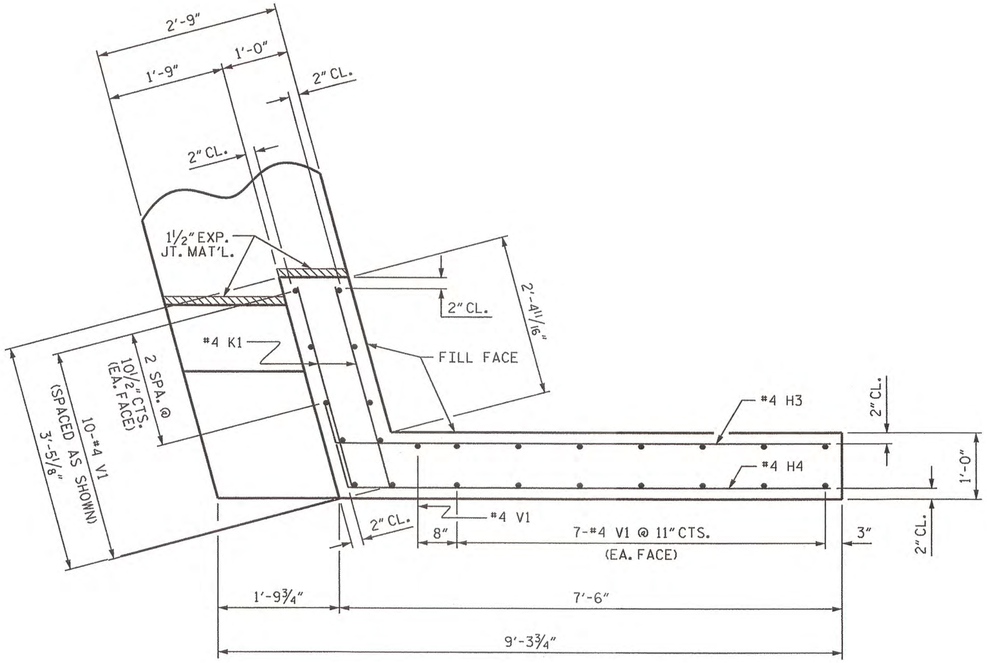

PLAN OF WING (W1)

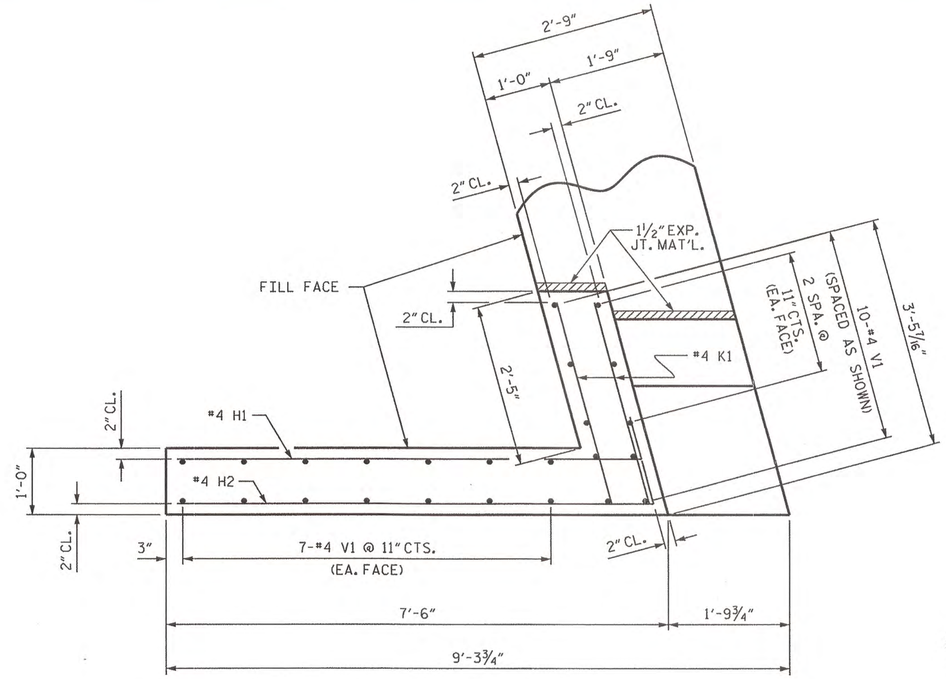

PLAN OF WING (W2)

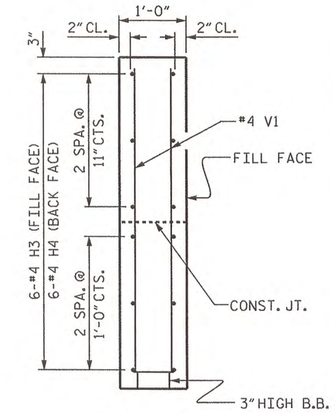

SECTION X-X

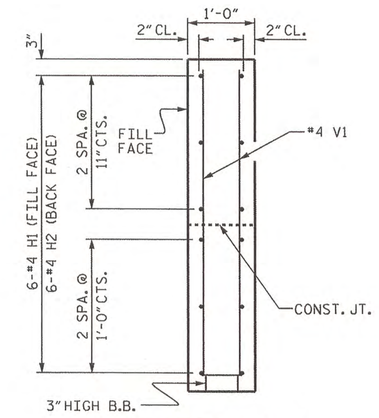

SECTION Y-Y

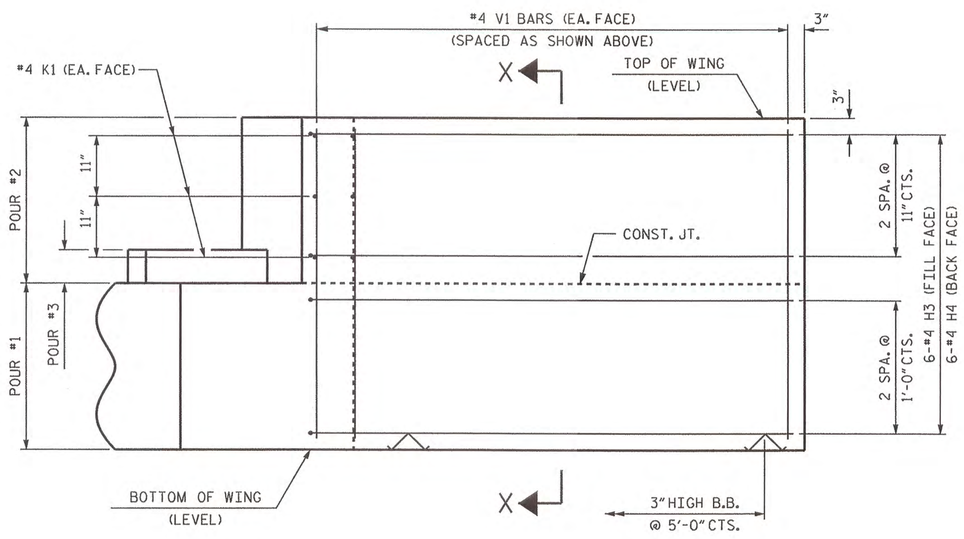

ELEVATION OF WING (W1)

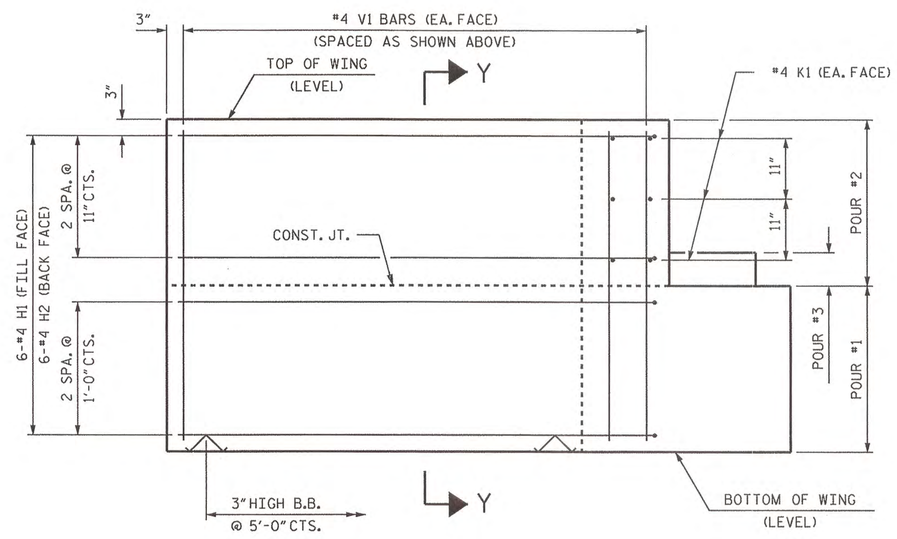

ELEVATION OF WING (W2)

WING DETAILS

PROJECT NO. BD-5109F
DAVIDSON COUNTY
STATION: 12+92.04-L-

SHEET 3 OF 4

STATE OF NORTH CAROLINA
DEPARTMENT OF TRANSPORTATION
RALEIGH

SUBSTRUCTURE
END BENT
WING DETAILS

NORTH CAROLINA PROFESSIONAL SEAL 10730 ENGINEER D. ANDRE DAVENPORT, JR.
1/12/12

REVISIONS						SHEET NO.
NO.	BY:	DATE:	NO.	BY:	DATE:	S-12
1			3			TOTAL SHEETS
2			4			16

ASSEMBLED BY: D.A. DAVENPORT	DATE: 01/10/12
CHECKED BY: G.W. DICKEY	DATE: 01/11/12
DRAWN BY: DGE 03/10	
CHECKED BY: MKT 03/10	

12-JAN-2012 08:20
R:\Structures\BD5109F_SD_CS.dgn
ddavenport

STD. NO. EB_30_75S

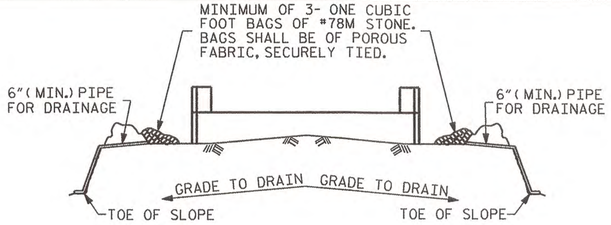

BAGGED STONE AND PIPE SHALL BE PLACED IMMEDIATELY AFTER COMPLETION OF END BENT EXCAVATION. PIPE MAY BE EITHER CONCRETE, CORRUGATED STEEL, CORRUGATED ALUMINUM ALLOY, OR CORRUGATED PLASTIC. PERFORATED PIPE WILL NOT BE ALLOWED.

BAGGED STONE SHALL REMAIN IN PLACE UNTIL THE ENGINEER DIRECTS THAT IT BE REMOVED. THE CONTRACTOR SHALL REMOVE AND DISPOSE OF SILT ACCUMULATIONS AT BAGGED STONE WHEN SO DIRECTED BY THE ENGINEER. BAGS SHALL BE REMOVED AND REPLACED WHENEVER THE ENGINEER DETERMINES THAT THEY HAVE DETERIORATED AND LOST THEIR EFFECTIVENESS.

NO SEPARATE PAYMENT WILL BE MADE FOR THIS WORK AND THE ENTIRE COST OF THIS WORK SHALL BE INCLUDED IN THE UNIT CONTRACT PRICE BID FOR THE SEVERAL PAY ITEMS.

TEMPORARY DRAINAGE AT END BENT

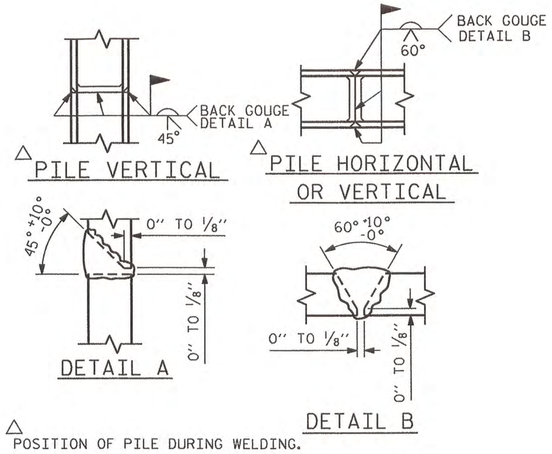

△ POSITION OF PILE DURING WELDING.

PILE SPLICE DETAILS

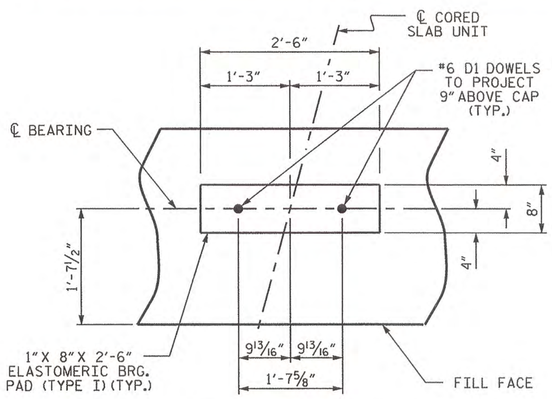

DETAIL "A"

(END BENT No. 1 SHOWN, END BENT No. 2 SIMILAR BY ROTATION)

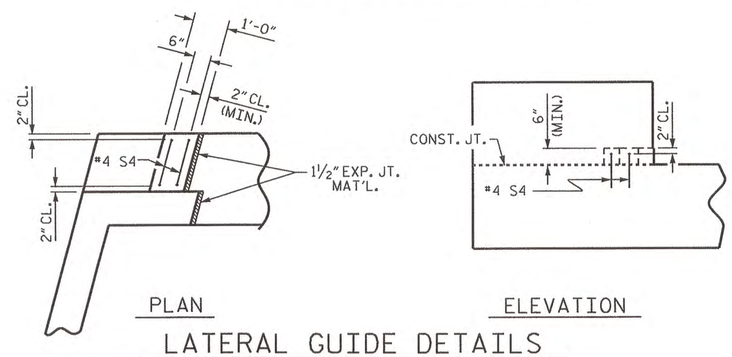

LATERAL GUIDE DETAILS

(END BENT No. 1, LEFT LATERAL GUIDE SHOWN, RIGHT END SIMILAR)
(END BENT No. 2 SIMILAR BY ROTATION)

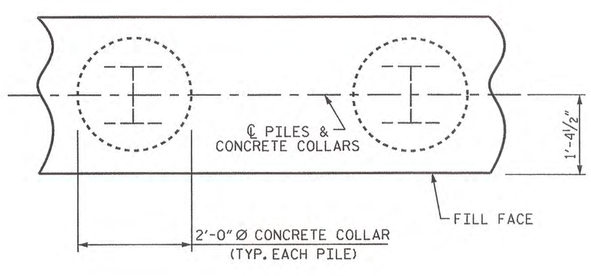

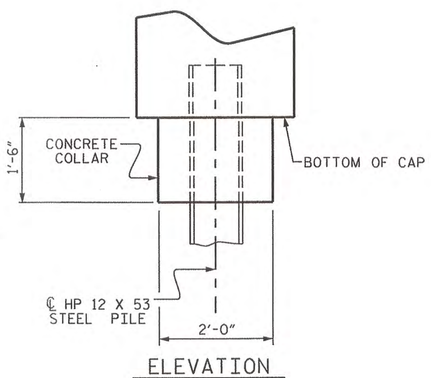

CORROSION PROTECTION FOR STEEL PILES DETAIL

(END BENT No. 1 SHOWN, END BENT No. 2 SIMILAR BY ROTATION)

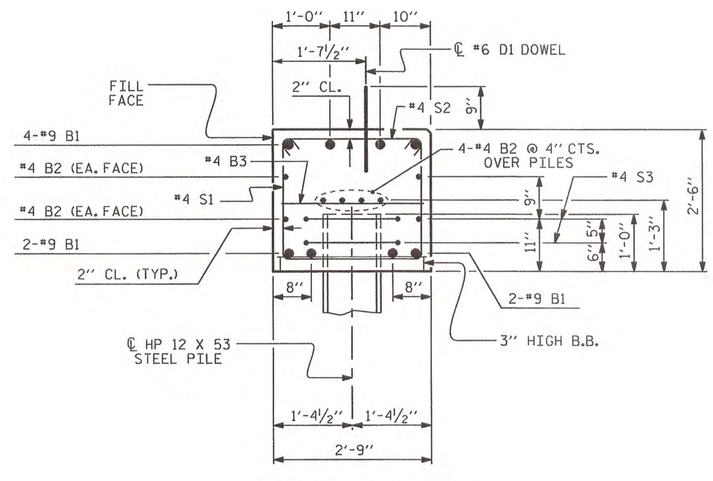

SECTION A-A

(CONCRETE COLLAR NOT SHOWN FOR CLARITY.
SEE "CORROSION PROTECTION FOR STEEL PILES DETAIL.")

BAR TYPES

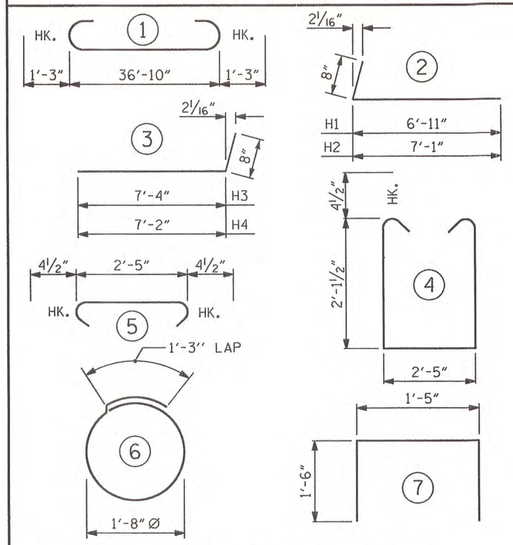

ALL BAR DIMENSIONS ARE OUT TO OUT.

END BENT No. 1	END BENT No. 2
HP 12 X 53 STEEL PILES	HP 12 X 53 STEEL PILES
NO: 5 LIN. FT.= 55	NO: 5 LIN. FT.= 80
STEEL PILE POINTS EA. 5	STEEL PILE POINTS EA. 5

BILL OF MATERIAL FOR ONE END BENT

BAR	NO.	SIZE	TYPE	LENGTH	WEIGHT
B1	8	#9	1	39'-4"	1070
B2	16	#4	STR	19'-9"	211
B3	10	#4	STR	2'-5"	16
D1	20	#6	STR	1'-6"	45
H1	6	#4	2	7'-7"	30
H2	6	#4	2	7'-9"	31
H3	6	#4	3	8'-0"	32
H4	6	#4	3	7'-10"	31
K1	12	#4	STR	3'-1"	25
S1	48	#4	4	7'-5"	238
S2	48	#4	5	3'-2"	102
S3	10	#4	6	6'-6"	43
S4	4	#4	7	4'-5"	12
V1	49	#4	STR	4'-8"	153

REINFORCING STEEL (FOR ONE END BENT) 2039 LBS.

CLASS A CONCRETE BREAKDOWN (FOR ONE END BENT)

POUR #1	CAP, LOWER PART OF WINGS & COLLARS	11.6 C.Y.
POUR #2	UPPER PART OF WINGS	1.8 C.Y.
POUR #3	LATERAL GUIDES	0.1 C.Y.
TOTAL CLASS A CONCRETE		13.5 C.Y.

PROJECT NO. BD-5109F
DAVIDSON COUNTY
STATION: 12+92.04-L-

SHEET 4 OF 4

STATE OF NORTH CAROLINA
DEPARTMENT OF TRANSPORTATION
RALEIGH

SUBSTRUCTURE

END BENT No. 1 & 2 DETAILS

NORTH CAROLINA PROFESSIONAL SEAL 10730 ENGINEER D. ANDREW DAVENPORT III
1/12/12

REVISIONS						SHEET NO.
NO.	BY:	DATE:	NO.	BY:	DATE:	S-13
1			3			TOTAL SHEETS
2			4			16

ASSEMBLED BY : D.A. DAVENPORT	DATE : 01/10/12	
CHECKED BY : G.W. DICKEY	DATE : 01/11/12	
DRAWN BY : DGE	03/10	
CHECKED BY : MKT	03/10	

12-JAN-2012 08:20
R:\Structures\BD5109F_SD_CS.dgn
ddavenport

STD. NO. EB_30_75S

NOTES

STIRRUPS IN CAP MAY BE SHIFTED AS NECESSARY TO CLEAR DOWELS.

THE LATERAL GUIDES ARE NOT TO BE POURED UNTIL AFTER THE CORED SLAB UNITS ARE IN PLACE.

★ INVERT ALTERNATE STIRRUPS.

GALVANIZE THE FULL LENGTH OF EACH INTERIOR BENT PILE IN ACCORDANCE WITH SECTION 1076 OF THE STANDARD SPECIFICATIONS.

THE CONTRACTOR HAS THE OPTION TO OMIT THE LATERAL GUIDE IF APPROVED BY THE ENGINEER.

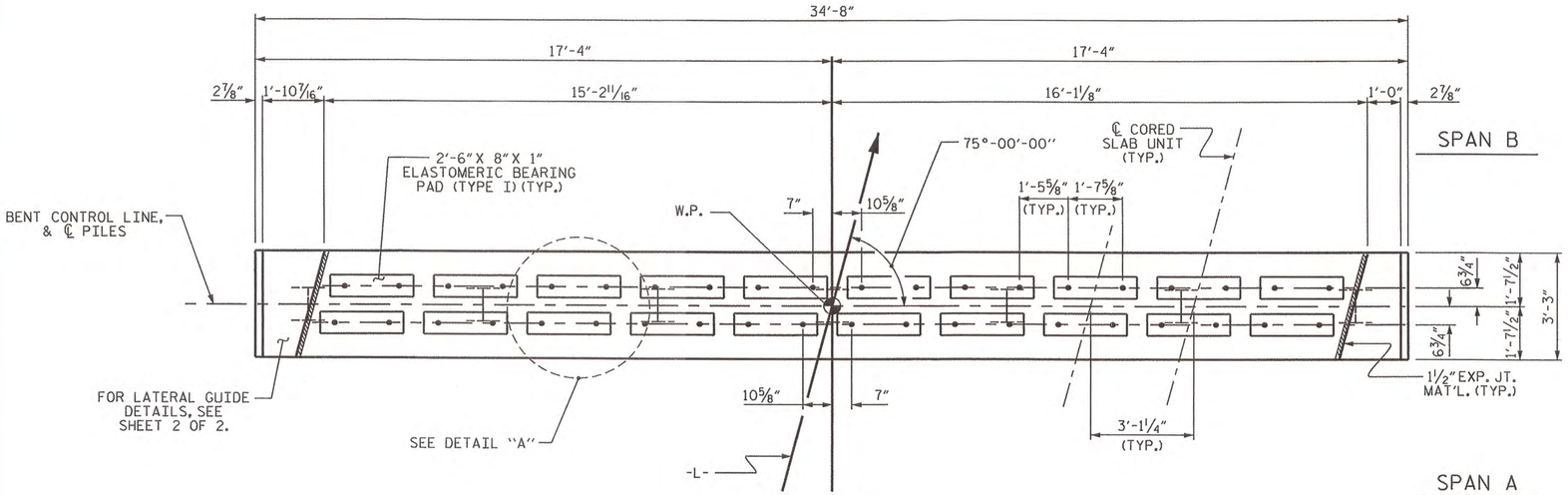

PLAN

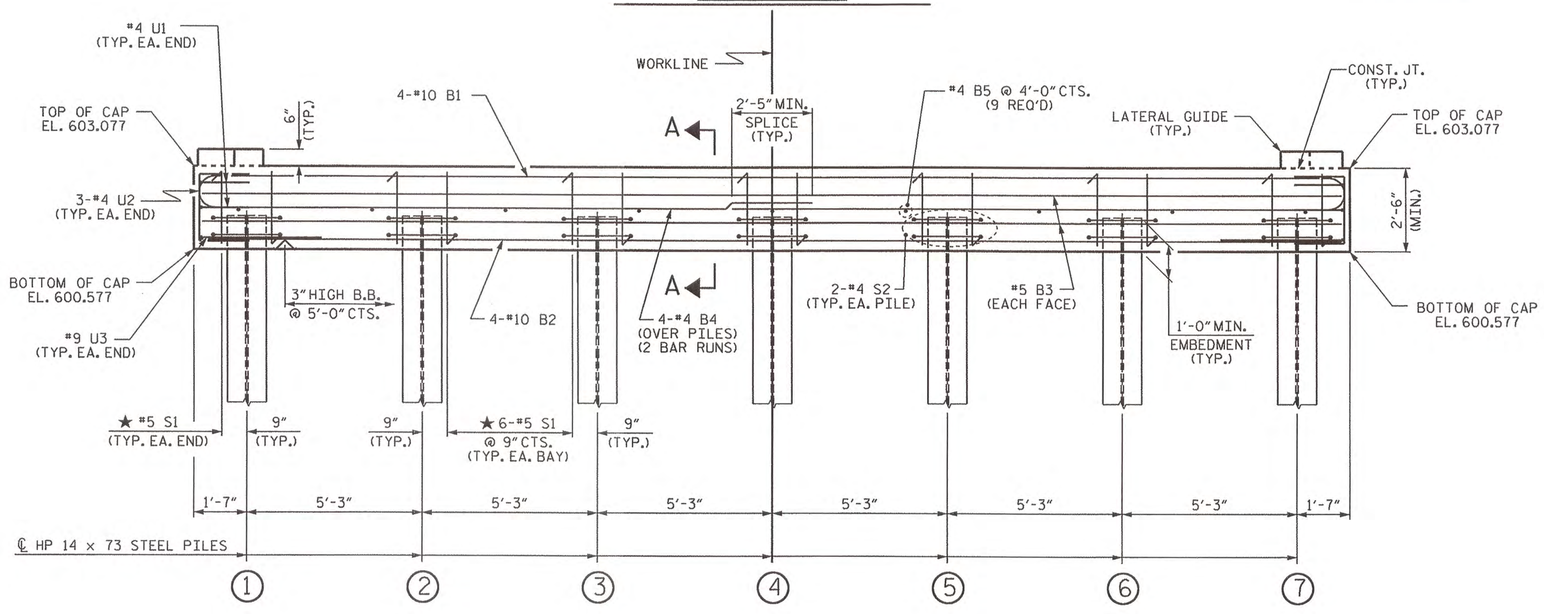

ELEVATION

FOR SECTION A-A, SEE SHEET 2 OF 2

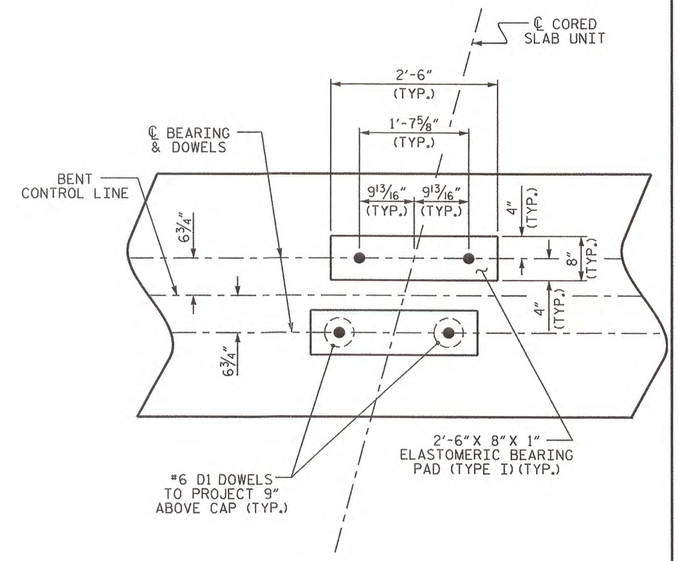

DETAIL "A"

(DIMENSIONS ARE TYPICAL EACH BEARING)

PROJECT NO. BD-5109F

DAVIDSON COUNTY

STATION: 12+92.04-L-

SHEET 1 OF 2

STATE OF NORTH CAROLINA
DEPARTMENT OF TRANSPORTATION
RALEIGH

SUBSTRUCTURE

BENT No. 1

NORTH CAROLINA PROFESSIONAL SEAL 10730 ENGINEER D. ANDREW DAVENPORT, JR.

REVISIONS						SHEET NO.
NO.	BY:	DATE:	NO.	BY:	DATE:	S-14
1			3			TOTAL SHEETS
2			4			16

ASSEMBLED BY : D.A. DAVENPORT DATE : 10/10/12
CHECKED BY : G.W. DICKEY DATE : 01/11/12

DRAWN BY : DGE 5/10
CHECKED BY : MKT 5/10

12-JAN-2012 08:20
R:\Structures\BD5109F_SD_CS.dgn
ddavenport

STD. NO. 14" HP_BT_30_75S_<60'

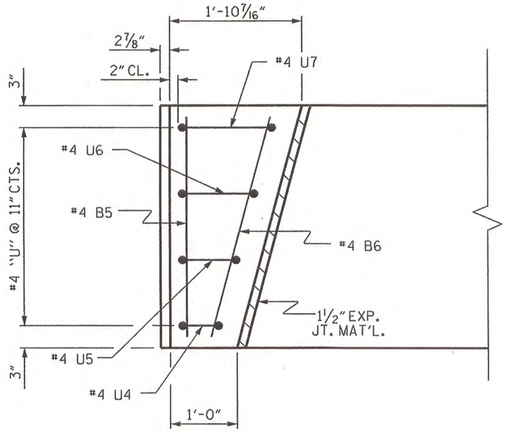

PLAN

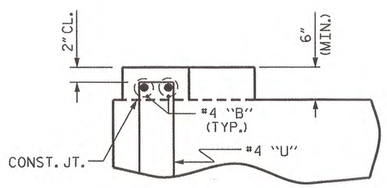

ELEVATION

LATERAL GUIDE DETAILS

(LEFT LATERAL GUIDE SHOWN, RIGHT SIDE SIMILAR)

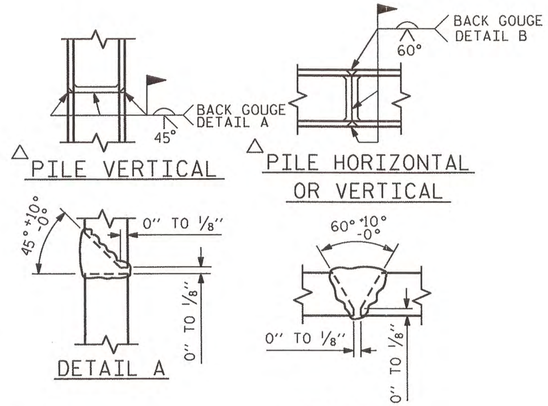

△ POSITION OF PILE DURING WELDING.

PILE SPLICE DETAILS

BAR TYPES

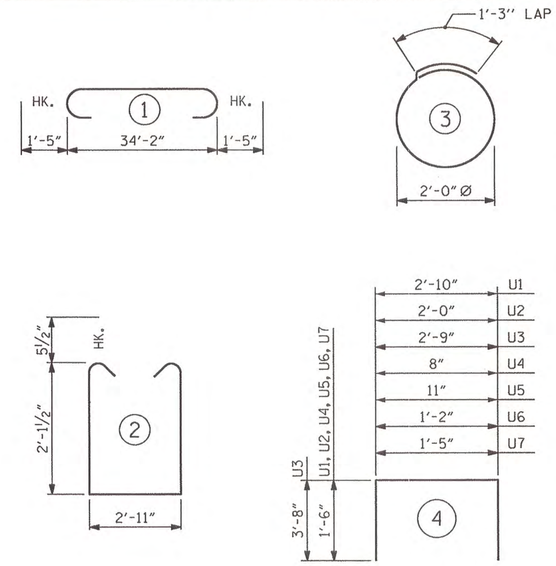

ALL BAR DIMENSIONS ARE OUT TO OUT.

BILL OF MATERIAL FOR ONE BENT

BAR	NO.	SIZE	TYPE	LENGTH	WEIGHT
B1	4	#10	1	37'-0"	637
B2	4	#10	STR	34'-4"	591
B3	4	#5	STR	34'-4"	143
B4	8	#4	STR	18'-5"	98
B5	11	#4	STR	2'-11"	21
B6	2	#4	STR	3'-0"	4
D1	40	#6	STR	1'-6"	90
S1	38	#5	2	8'-1"	320
S2	14	#4	3	7'-7"	71
U1	4	#4	4	5'-10"	16
U2	6	#4	4	5'-0"	20
U3	2	#9	4	10'-1"	69
U4	2	#4	4	3'-8"	5
U5	2	#4	4	3'-11"	5
U6	2	#4	4	4'-2"	6
U7	2	#4	4	4'-5"	6

REINFORCING STEEL (FOR ONE BENT) 2102 LBS

CLASS A CONCRETE BREAKDOWN (FOR ONE BENT)

POUR #1 (CAP) 10.4 C.Y.
POUR #2 (LATERAL GUIDES) 0.2 C.Y.

TOTAL CLASS A CONCRETE 10.6 C.Y.

HP 14 X 73 GALVANIZED STEEL PILES (FOR ONE BENT)

No. 7 LIN. FT. 150

PILE EXCAVATION IN SOIL LIN. FT. 45

PILE EXCAVATION NOT IN SOIL LIN. FT. 49

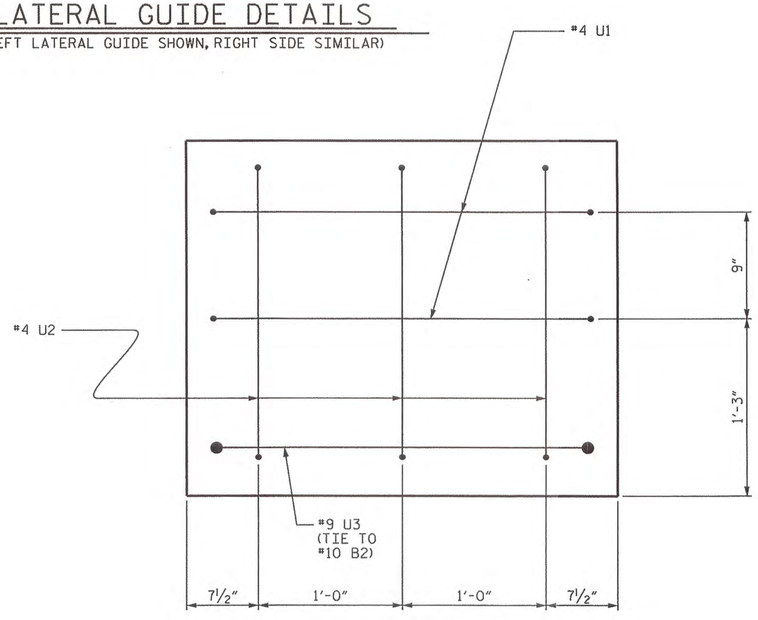

END OF CAP VIEW

(TYPICAL BOTH ENDS)

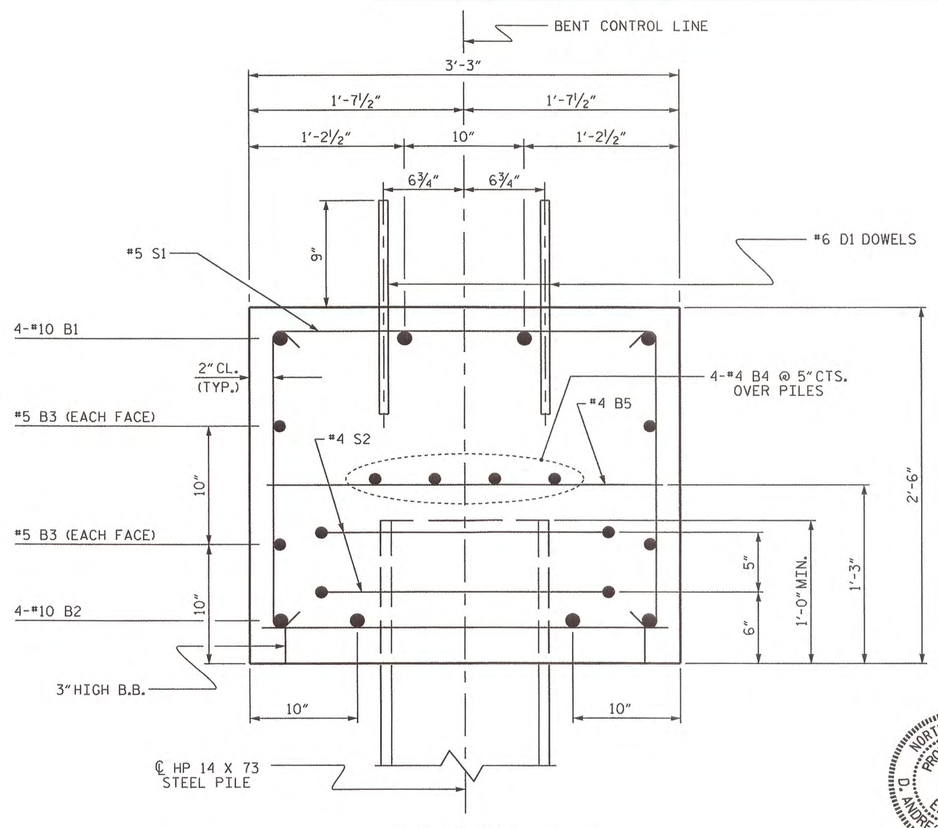

SECTION A-A

PROJECT NO. BD-5109F
DAVIDSON COUNTY
STATION: 12+92.04-L-

SHEET 2 OF 2

STATE OF NORTH CAROLINA
DEPARTMENT OF TRANSPORTATION
RALEIGH

SUBSTRUCTURE

BENT No. 1

NORTH CAROLINA PROFESSIONAL SEAL 10730 ENGINEER D. ANDREW DAVENPORT, JR.
1/12/12

REVISIONS								SHEET NO.
NO.	BY:	DATE:	NO.	BY:	DATE:			S-15
1			3					TOTAL SHEETS
2			4					16

DRAWN BY : D.A. DAVENPORT DATE : 01/10/12
CHECKED BY : G.W. DICKEY DATE : 01/11/12

DRAWN BY : DGE 05/10
CHECKED BY : MKT 05/10

12-JAN-2012 08:36
R:\Structures\BD5109F_SD_CS.dgn
adavenport

STD. NO. 14" HP_BT_30_75S_<60'

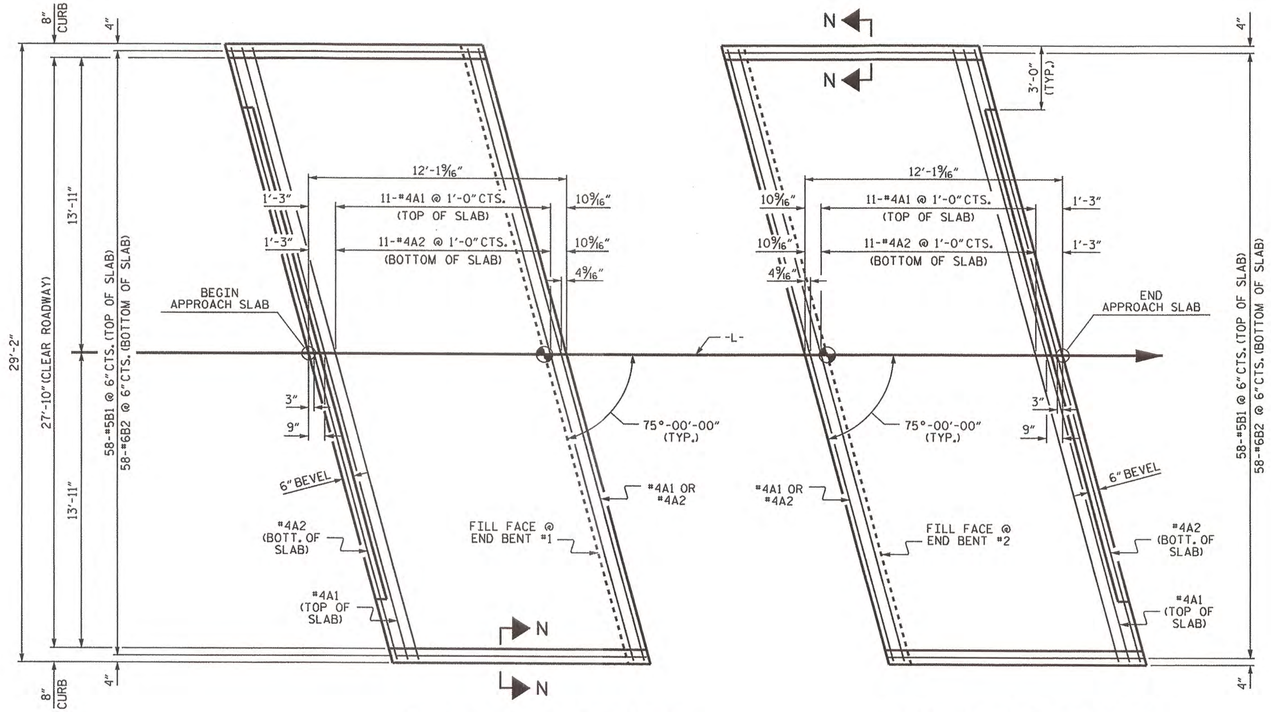

PLAN @ END BENT #1

PLAN @ END BENT #2

DIMENSIONS SHOWN ARE TYPICAL FOR BOTH APPROACH SLABS

NOTES

FOR BRIDGE APPROACH FILL INCLUDING GEOTEXTILE, 4" Ø DRAINAGE PIPE, AND #78M STONE BACKFILL, SEE ROADWAY PLANS.

GEOTEXTILE SHALL BE TYPE 1 IN ACCORDANCE WITH THE STANDARD SPECIFICATIONS SECTION 1056.

#78M STONE BACKFILL (CLASS V SELECT MATERIAL) SHALL BE IN ACCORDANCE WITH STANDARD SPECIFICATIONS SECTION 1016.

#78M STONE BACKFILL IS TO BE CONTINUOUS ALONG FILL FACE OF BACKWALL FROM OUTSIDE EDGE TO OUTSIDE EDGE OF APPROACH SLAB.

FOR THE 4" Ø DRAINAGE PIPE OUTLET(S), SEE ROADWAY STANDARD DRAWINGS.

AREA BETWEEN THE WINGWALL AND APPROACH SLAB SHALL BE GRADED TO DRAIN THE WATER AWAY FROM THE FILL FACE OF THE BRIDGE AND SHALL BE PAVED. SEE ROADWAY PLANS.

APPROACH SLAB GROOVING IS NOT REQUIRED.

BILL OF MATERIAL

APPROACH SLAB AT EB #1

BAR	NO.	SIZE	TYPE	LENGTH	WEIGHT
* A1	13	#4	STR	29'-10"	259
A2	13	#4	STR	29'-10"	259
* B1	58	#5	STR	11'-1"	670
B2	58	#6	STR	11'-7"	1009
REINFORCING STEEL				LBS.	1268
* EPOXY COATED REINFORCING STEEL				LBS.	929
CLASS AA CONCRETE				C. Y.	16.9

APPROACH SLAB AT EB #2

BAR	NO.	SIZE	TYPE	LENGTH	WEIGHT
* A1	13	#4	STR	29'-10"	259
A2	13	#4	STR	29'-10"	259
* B1	58	#5	STR	11'-1"	670
B2	58	#6	STR	11'-7"	1009
REINFORCING STEEL				LBS.	1268
* EPOXY COATED REINFORCING STEEL				LBS.	929
CLASS AA CONCRETE				C. Y.	16.9

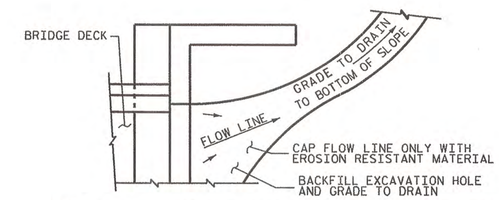

NOTE: IF THE APPROACH SLAB IS NOT CONSTRUCTED IMMEDIATELY AFTER THE BACKFILLING OF THE END BENT EXCAVATION, GRADE TO DRAIN TO THE BOTTOM OF THE SLOPE AND PROVIDE EROSION RESISTANT MATERIAL, SUCH AS FIBERGLASS ROVING OR AS DIRECTED BY THE ENGINEER TO PREVENT SOIL EROSION AND TO PROTECT THE AREA ADJACENT TO THE STRUCTURE. THE CONTRACTOR WILL BE REQUIRED TO REMOVE THESE MATERIALS PRIOR TO CONSTRUCTION OF THE APPROACH SLAB.

TEMPORARY DRAINAGE DETAIL

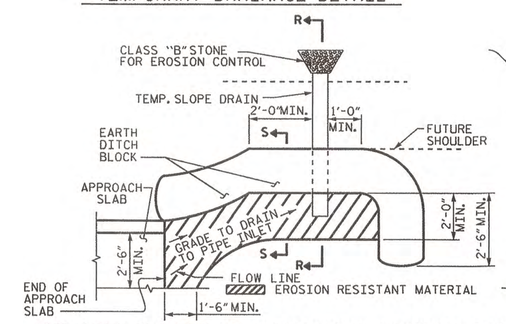

NOTE: IMMEDIATELY AFTER THE CONSTRUCTION OF THE APPROACH SLAB, THE CONTRACTOR SHALL PROVIDE TEMPORARY BERM AND SLOPE DRAIN. CONTRACTOR SHALL GRADE TO PIPE INLET AND PROVIDE EROSION RESISTANT MATERIAL AS SHOWN. THE EROSION RESISTANT MATERIAL SHALL BE EITHER 1) ASPHALT PLANT MIX, TYPE 1 OR TYPE 2, MIN. 2" DEPTH, 2) EROSION CONTROL MAT, OR 3) CONCRETE, AS DIRECTED BY THE ENGINEER. THE SLOPE DRAIN SHALL CONSIST OF A NON-PERFORATED TEMPORARY DRAINAGE PIPE, 12 INCHES IN DIAMETER.

PLAN VIEW

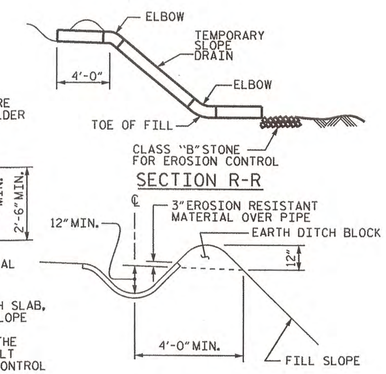

SECTION S-S

TEMPORARY BERM AND SLOPE DRAIN DETAILS

(TO BE USED WHEN SHOULDER BERM GUTTER IS REQUIRED)

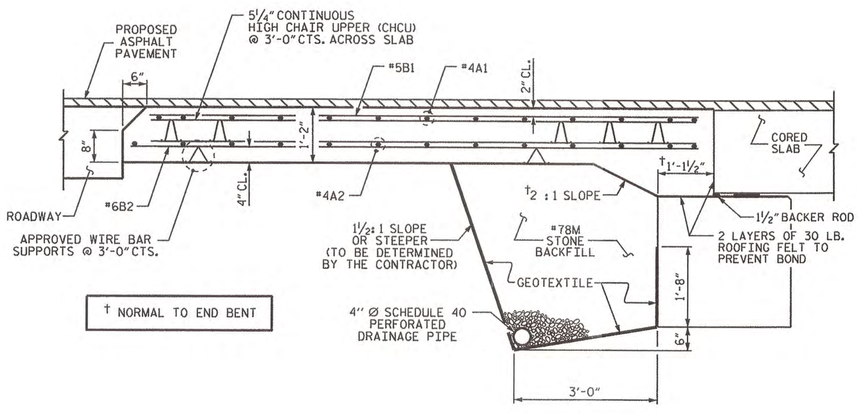

† NORMAL TO END BENT

SECTION THRU SLAB

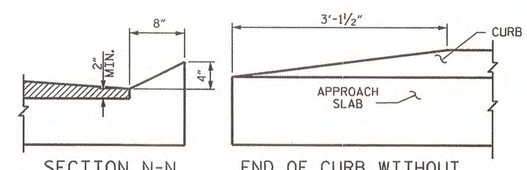

SECTION N-N

END OF CURB WITHOUT SHOULDER BERM GUTTER

CURB DETAILS

SPLICE LENGTHS		
BAR SIZE	EPOXY COATED	UNCOATED
#4	2'-0"	1'-9"
#5	2'-6"	2'-2"
#6	3'-10"	2'-7"

PROJECT NO. BD-5109F

DAVIDSON COUNTY

STATION: 12+92.04-L-

STATE OF NORTH CAROLINA
DEPARTMENT OF TRANSPORTATION
RALEIGH

STANDARD
BRIDGE APPROACH SLAB
FOR PRESTRESSED CONCRETE
CORED SLAB UNIT
(SUB-REGIONAL TIER)
75° SKEW

REVISIONS						SHEET NO.
NO.	BY:	DATE:	NO.	BY:	DATE:	S-16
1			3			TOTAL SHEETS
2			4			16

ASSEMBLED BY : D.A. DAVENPORT	DATE : 01/10/12
CHECKED BY : G.W. DICKEY	DATE : 01/11/12
DRAWN BY : SHS/MAA 5-09	REV. 12-11 MAA/AAC
CHECKED BY : BCH 5-09	

12-JAN-2012 08:21
R:\Structures\BD5109F_SD_CS.dgn
ddavenport

STD. NO. BAS_30_75S

STANDARD NOTES

DESIGN DATA:

SPECIFICATIONS	A.A.S.H.T.O. (CURRENT)
LIVE LOAD	SEE PLANS
IMPACT ALLOWANCE	SEE A.A.S.H.T.O.
STRESS IN EXTREME FIBER OF	
STRUCTURAL STEEL - AASHTO M270 GRADE 36	20,000 LBS. PER SQ. IN.
- AASHTO M270 GRADE 50W	27,000 LBS. PER SQ. IN.
- AASHTO M270 GRADE 50	27,000 LBS. PER SQ. IN.
REINFORCING STEEL IN TENSION	
GRADE 60	24,000 LBS. PER SQ. IN.
CONCRETE IN COMPRESSION	1,200 LBS. PER SQ. IN.
CONCRETE IN SHEAR	SEE A.A.S.H.T.O.
STRUCTURAL TIMBER - TREATED OR	
UNTREATED - EXTREME FIBER STRESS	1,800 LBS. PER SQ. IN.
COMPRESSION PERPENDICULAR TO GRAIN OF TIMBER	375 LBS. PER SQ. IN.
EQUIVALENT FLUID PRESSURE OF EARTH	30 LBS. PER CU. FT. (MINIMUM)

MATERIAL AND WORKMANSHIP:

EXCEPT AS MAY OTHERWISE BE SPECIFIED ON PLANS OR IN THE SPECIAL PROVISIONS, ALL MATERIAL AND WORKMANSHIP SHALL BE IN ACCORDANCE WITH THE 2006 "STANDARD SPECIFICATIONS FOR ROADS AND STRUCTURES" OF THE N. C. DEPARTMENT OF TRANSPORTATION.

STEEL SHEET PILING FOR PERMANENT OR TEMPORARY APPLICATIONS SHALL BE HOT ROLLED.

CONCRETE:

UNLESS OTHERWISE REQUIRED ON PLANS, CLASS A CONCRETE SHALL BE USED FOR ALL PORTIONS OF ALL STRUCTURES WITH THE EXCEPTION THAT: CLASS AA CONCRETE SHALL BE USED IN BRIDGE SUPERSTRUCTURES, ABUTMENT BACKWALLS, AND APPROACH SLABS; AND CLASS B CONCRETE SHALL BE USED FOR SLOPE PROTECTION AND RIP RAP.

CONCRETE CHAMFERS:

UNLESS OTHERWISE NOTED ON THE PLANS, ALL EXPOSED CORNERS ON STRUCTURES SHALL BE CHAMFERED 3/4" WITH THE FOLLOWING EXCEPTIONS: TOP CORNERS OF CURBS MAY BE ROUNDED TO 1-1/2" RADIUS WHICH IS BUILT INTO CURB FORMS; CORNERS OF TRANSVERSE FLOOR EXPANSION JOINTS SHALL BE ROUNDED WITH A 1/4" FINISHING TOOL UNLESS OTHERWISE REQUIRED ON PLANS; AND CORNERS OF EXPANSION JOINTS IN THE ROADWAY FACES AND TOPS OF CURBS AND SIDEWALKS SHALL BE ROUNDED TO A 1/4" RADIUS WITH A FINISHING STONE OR TOOL UNLESS OTHERWISE REQUIRED ON PLANS.

DOWELS:

DOWELS WHEN INDICATED ON PLANS AS FOR CULVERT EXTENSIONS, SHALL BE EMBEDDED AT LEAST 12" INTO THE OLD CONCRETE AND GROUTED INTO PLACE WITH 1:2 CEMENT MORTAR.

ALLOWANCE FOR DEAD LOAD DEFLECTION, SETTLEMENT, ETC. IN CASTING SUPERSTRUCTURES:

BRIDGES SHALL BE BUILT ON THE GRADE OR VERTICAL CURVE SHOWN ON PLANS. SLABS, CURBS AND PARAPETS SHALL CONFORM TO THE GRADE OR CURVE.

ALL DIMENSIONS WHICH ARE GIVEN IN SECTION AND ARE AFFECTED BY DEAD LOAD DEFLECTIONS ARE DIMENSIONS AT CENTER LINE OF BEARING UNLESS OTHERWISE NOTED ON PLANS. IN SETTING FORMS FOR STEEL BEAM BRIDGES AND PRESTRESSED CONCRETE GIRDER BRIDGES, ADJUSTMENTS SHALL BE MADE DUE TO THE DEAD LOAD DEFLECTIONS FOR THE ELEVATIONS SHOWN. WHERE BLOCKS ARE SHOWN OVER BEAMS FOR BUILDING UP TO THE SLAB, THE VERTICAL DIMENSIONS OF THE BLOCKS SHALL BE ADJUSTED BETWEEN BEARINGS TO COMPENSATE FOR DEAD LOAD DEFLECTIONS, VERTICAL CURVE ORDINATE, AND ACTUAL BEAM CAMBER. WHERE BOTTOM OF SLAB IS IN LINE WITH BOTTOM OF TOP FLANGES, DEPTH OF SLAB BETWEEN BEARINGS SHALL BE ADJUSTED TO COMPENSATE FOR DEAD LOAD DEFLECTION, VERTICAL CURVE ORDINATE, AND ACTUAL BEAM CAMBER.

IN SETTING FALSEWORK AND FORMS FOR REINFORCED CONCRETE SPANS, AN ALLOWANCE SHALL BE MADE FOR DEAD LOAD DEFLECTIONS, SETTLEMENT OF FALSEWORK, AND PERMANENT CAMBER WHICH SHALL BE PROVIDED FOR IN ADDITION TO THE ELEVATIONS SHOWN. AFTER REMOVAL OF THE FALSEWORK, THE FINISHED STRUCTURES SHALL CONFORM TO THE PROFILE AND ELEVATIONS SHOWN ON THE PLANS AND CONSTRUCTION ELEVATIONS FURNISHED BY THE ENGINEER.

DETAILED DRAWINGS FOR FALSEWORK OR FORMS FOR BRIDGE SUPERSTRUCTURE AND ANY STRUCTURE OR PARTS OF A STRUCTURE AS NOTED ON THE PLANS SHALL BE SUBMITTED TO THE ENGINEER FOR APPROVAL BEFORE CONSTRUCTION OF THE FALSEWORK OR FORMS IS STARTED.

REINFORCING STEEL:

ALL REINFORCING STEEL SHALL BE DEFORMED. DIMENSIONS RELATIVE TO PLACEMENT OF REINFORCING ARE TO CENTERS OF BARS UNLESS OTHERWISE INDICATED IN THE PLANS. DIMENSIONS ON BAR DETAILS ARE TO CENTERS OF BARS OR ARE OUT TO OUT AS INDICATED ON PLANS.

WIRE BAR SUPPORTS SHALL BE PROVIDED FOR REINFORCING STEEL WHERE INDICATED ON THE PLANS. WHEN BAR SUPPORT PIECES ARE PLACED IN CONTINUOUS LINES, THEY SHALL BE SO PLACED THAT THE ENDS OF THE SUPPORTING WIRES SHALL BE LAPPED TO LOCK LEGS ON ADJOINING PIECES.

STRUCTURAL STEEL:

AT THE CONTRACTOR'S OPTION, HE MAY SUBSTITUTE 7/8" Ø SHEAR STUDS FOR THE 3/4" Ø STUDS SPECIFIED ON THE PLANS. THIS SUBSTITUTION SHALL BE MADE AT THE RATE OF 3 - 7/8" Ø STUDS FOR 4 - 3/4" Ø STUDS, AND STUD SPACING CHANGES SHALL BE MADE AS NECESSARY TO PROVIDE THE SAME EQUIVALENT NUMBER OF 7/8" Ø STUDS ALONG THE BEAM AS SHOWN FOR 3/4" Ø STUDS BASED ON THE RATIO OF 3 - 7/8" Ø STUDS FOR 4 - 3/4" Ø STUDS. STUDS OF THE LENGTH SPECIFIED ON THE PLANS MUST BE PROVIDED. THE MAXIMUM SPACING SHALL BE 2'-0".

EXCEPT AT THE INTERIOR SUPPORTS OF CONTINUOUS BEAMS WHERE THE COVER PLATE IS IN CONTACT WITH BEARING PLATE, THE CONTRACTOR MAY, AT HIS OPTION, SUBSTITUTE FOR THE COVER PLATES DESIGNATED ON THE PLANS COVER PLATES OF THE EQUIVALENT AREA PROVIDED THESE PLATES ARE AT LEAST 5/16" IN THICKNESS AND DO NOT EXCEED A WIDTH EQUAL TO THE FLANGE WIDTH LESS 2" OR A THICKNESS EQUAL TO 2 TIMES THE FLANGE THICKNESS. THE SIZE OF FILLET WELDS SHALL CONFORM TO THE REQUIREMENTS OF THE CURRENT ANSI/AASHTO/AWS "BRIDGE WELDING CODE". ELECTROSLAG WELDING WILL NOT BE PERMITTED.

WITH THE SOLE EXCEPTION OF EDGES AT SURFACES WHICH BEAR ON OTHER SURFACES, ALL SHARP EDGES AND ENDS OF SHAPES AND PLATES SHALL BE SLIGHTLY ROUNDED BY SUITABLE MEANS TO A RADIUS OF APPROXIMATELY 1/16 INCH OR EQUIVALENT FLAT SURFACE AT A SUITABLE ANGLE PRIOR TO PAINTING, GALVANIZING, OR METALLIZING.

HANDRAILS AND POSTS:

METAL STANDARDS AND FACES OF THE CONCRETE END POSTS FOR THE METAL RAIL SHALL BE SET NORMAL TO THE GRADE OF THE CURB, UNLESS OTHERWISE SHOWN ON PLANS. THE METAL RAIL AND TOPS OF CONCRETE POSTS USED WITH THE ALUMINUM RAIL SHALL BE BUILT PARALLEL TO THE GRADE OF THE CURB.

METAL HANDRAILS SHALL BE IN ACCORDANCE WITH THE PLANS. RAILS SHALL BE AS MANUFACTURED FOR BRIDGE RAILING. CASTINGS SHALL BE OF A UNIFORM APPEARANCE. FINS AND OTHER DEFORMATIONS RESULTING FROM CASTING OR OTHERWISE SHALL BE REMOVED IN A MANNER SO THAT A UNIFORM COLORING OF THE COMPLETED CASTING SHALL BE OBTAINED. CASTINGS WITH DISCOLORATIONS OR OF NON-UNIFORM COLORING WILL NOT BE ACCEPTED. CERTIFIED MILL REPORTS ARE REQUIRED FOR METAL RAILS AND POSTS.

SPECIAL NOTES:

GENERALLY, IN CASE OF DISCREPANCY, THIS STANDARD SHEET OF NOTES SHALL GOVERN OVER THE SPECIFICATIONS, BUT THE REMAINDER OF THE PLANS SHALL GOVERN OVER NOTES HEREON, AND SPECIAL PROVISIONS SHALL GOVERN OVER ALL. SEE SPECIFICATIONS ARTICLE 105-4.

ENGLISH

JANUARY, 1990