TIP NO.	SHEET NO.

APPROVED: RAW
DATE: 3/8/12

SEAL

NORTH CAROLINA PROFESSIONAL SEAL 022959 ENGINEER RONALD W. KING

STATE OF
NORTH CAROLINA
DEPT. OF TRANSPORTATION
DIVISION OF HIGHWAYS
RALEIGH, N.C.

1-12

ENGLISH DETAIL DRAWING FOR
GROUND MOUNTED SIGN SUPPORTS

	SLIP BASE PLATE DATA								KEEPER PLATE DATA							HINGE CONNECTION DATA										BREAK AWAY SUPPORT WEIGHT CONSTANT LBS.
BEAM SHAPE	BOLT SIZE	A_1	B_1	C_1	D_1	E_1	T_1	R_1	A_2	B_2	C_2	D_2	E_2	R_2	T_2	BOLT SIZE	F	G	H	I	J	K	L	R_3	T_3	
S3X5.7	½"DIA.X 3"	7"	4"	1"	¾"	2½"	1"	9/32"	7"	4"	1"	¾"	2½"	9/32"	28 GAUGE	½"DIA.X1¼"	2¼"	3½"	4"	½"	1"	½"	2"	9/32"	⅜"	18
S4X7.7	½"DIA.X 3"	8"	4"	1"	¾"	2½"	1"	9/32"	8"	4"	1"	¾"	2½"	9/32"	28 GAUGE	½"DIA.X1¼"	2⅝"	3½"	4"	½"	1"	½"	2"	9/32"	⅜"	20
W6X9	½"DIA.X 3"	10"	5"	1"	¾"	3½"	1"	9/32"	10"	5"	1"	¾"	3½"	9/32"	28 GAUGE	½"DIA.X1¼"	4"	3½"	4"	¾"	1"	½"	2"	9/32"	⅜"	32
W6X12	⅝"DIA.X3¾"	11"	5"	1¼"	⅞"	3¼"	1¼"	11/32"	11"	5"	1¼"	⅞"	3¼"	11/32"	28 GAUGE	⅝"DIA.X2¼"	4"	4"	4½"	¾"	1⅛"	⅝"	2¼"	11/32"	⅜"	39
W6X16	⅝"DIA.X3¾"	12"	6"	1¼"	⅞"	4¼"	1½"	11/32"	12"	6"	1¼"	⅞"	4¼"	11/32"	28 GAUGE	⅝"DIA.X2½"	4"	4"	4½"	¾"	1⅛"	⅝"	2¼"	11/32"	½"	47
W8X18	⅝"DIA.X 4¼"	13½"	6½"	1¼"	⅞"	4¾"	1½"	11/32"	13½"	6½"	1¼"	⅞"	4¾"	11/32"	28 GAUGE	⅝"DIA.X2½"	5¼"	4"	4½"	1"	1⅛"	⅝"	2¼"	11/32"	½"	70
W8X21	¾"DIA.X 4¼"	14"	7"	1½"	1"	5"	1½"	13/32"	14"	7"	1½"	1"	5"	13/32"	28 GAUGE	¾"DIA.X2¾"	5¼"	6"	7"	1"	1¾"	¾"	3½"	13/32"	½"	73
W10X22	¾"DIA.X 4¼"	16"	8"	1½"	1"	6"	1½"	13/32"	16"	8"	1½"	1"	6"	13/32"	28 GAUGE	¾"DIA.X2¾"	5¾"	6"	7"	1"	1¾"	¾"	3½"	13/32"	½"	119
W10X26	¾"DIA.X4¾"	16½"	8"	1½"	1"	6"	1¾"	13/32"	16½"	8"	1½"	1"	6"	13/32"	28 GAUGE	¾"DIA.X2¾"	5¾"	6"	7"	1"	1¾"	¾"	3½"	13/32"	⅝"	140
W12X26	¾"DIA.X4¾"	18½"	9"	1½"	1"	7"	1¾"	13/32"	18½"	9"	1½"	1"	7"	13/32"	28 GAUGE	¾"DIA.X2¾"	6½"	6"	7"	1"	1¾"	¾"	3½"	13/32"	⅝"	176
W14X30	1"DIA.X 5"	22"	9"	2"	1½"	6"	2"	17/32"	22"	9"	2"	1½"	6"	17/32"	28 GAUGE	1"DIA.X3"	6¾"	7"	8"	1¼"	2"	1"	4"	17/32"	⅝"	205
W16X31	1"DIA.X 5"	24"	9"	2"	1½"	6"	2"	17/32"	24"	9"	2"	1½"	6"	17/32"	28 GAUGE	1"DIA.X3¼"	5½"	7"	8"	1¼"	2"	1"	4"	17/32"	¾"	223
W18X35	1"DIA.X 5"	25"	9"	2"	1½"	6"	2"	17/32"	25"	9"	2"	1½"	6"	17/32"	28 GAUGE	1"DIA.X3¼"	6"	7"	8"	1¼"	2"	1"	4"	17/32"	¾"	243
W18X40	1"DIA.X5½"	26"	9"	2"	1½"	6"	2¼"	17/32"	26"	9"	2"	1½"	6"	17/32"	28 GAUGE	1"DIA.X3¾"	6"	7"	8"	1¼"	2"	1"	4"	17/32"	⅞"	278
W21X44	1"DIA.X5½"	29"	9"	2"	1½"	6"	2½"	17/32"	29"	9"	2"	1½"	6"	17/32"	28 GAUGE	1"DIA.X3¾"	6½"	7"	8"	1¼"	2"	1"	4"	17/32"	⅞"	310

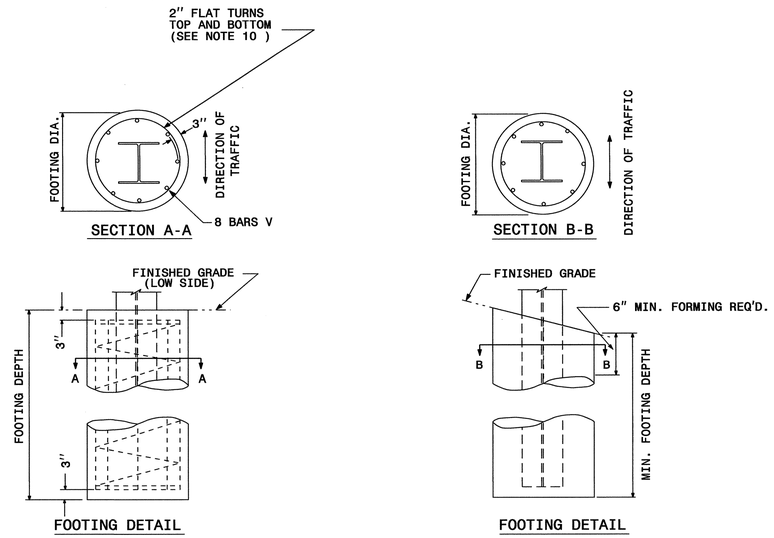

FOUNDATION DATA *		
FOOTING DIAMETER	REINFORCEMENT	SPIRAL BAR
1' 6"	8 # 6 BARS	#3 BAR, 6" PITCH
2'	8 # 7 BARS	#3 BAR, 6" PITCH
2' 6"	8 # 9 BARS	#3 BAR, 6" PITCH
3'	8 # 11 BARS	#3 BAR, 6" PITCH
3' 6"	8 # 12 BARS	#3 BAR, 6" PITCH
4'	8 # 14 BARS	#3 BAR, 6" PITCH

* FOUNDATION DIMENSIONS ARE SHOWN IN PLANS

SHEET 2 OF 3
903D10

STATE OF
NORTH CAROLINA
DEPT. OF TRANSPORTATION
DIVISION OF HIGHWAYS
RALEIGH, N.C.

1-12

ENGLISH DETAIL DRAWING FOR
GROUND MOUNTED SIGN SUPPORTS

SHEET 2 OF 3
903D10

REVISED SIGNING
ROADWAY STANDARD DRAWING

08-MAR-2012 10:10
S:\S&DU\Standards Group\PMP\2012 Standard Drawings\Standard Dwgs 8-17-11\Revised\0903l0_sgn_sht02.gm support_Revised_Sealed.dgn
dstokes AT TE244745