STATE OF
NORTH CAROLINA
DEPT. OF TRANSPORTATION
DIVISION OF HIGHWAYS
RALEIGH, N.C.

7-06

ENGLISH STANDARD DRAWING FOR

PARALLEL PIPE END SECTION

PREFABRICATED STEEL SECTION FOR 15" TO 24" PIPE

SHEET 1 OF 1

310.04

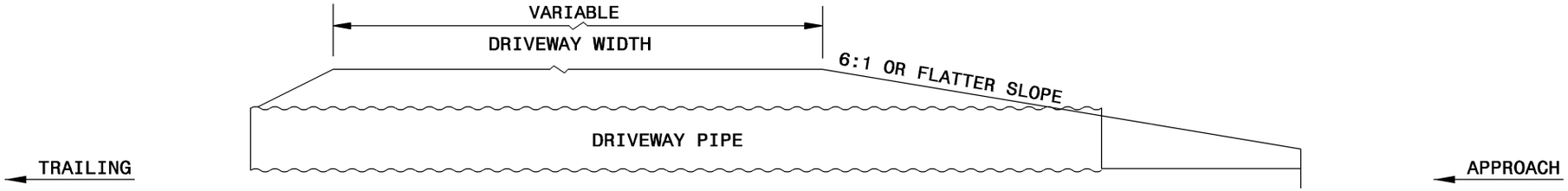

DRIVEWAY PIPE TYPICAL SECTION

END TREATMENT DIMENSIONS			
D	L	W	THICK. GAGE
15"	2'-6"	1'-9"	16 MIN.
18"	4'-0"	2'-0"	16 MIN.
24"	7'-0"	2'-6"	16 MIN.

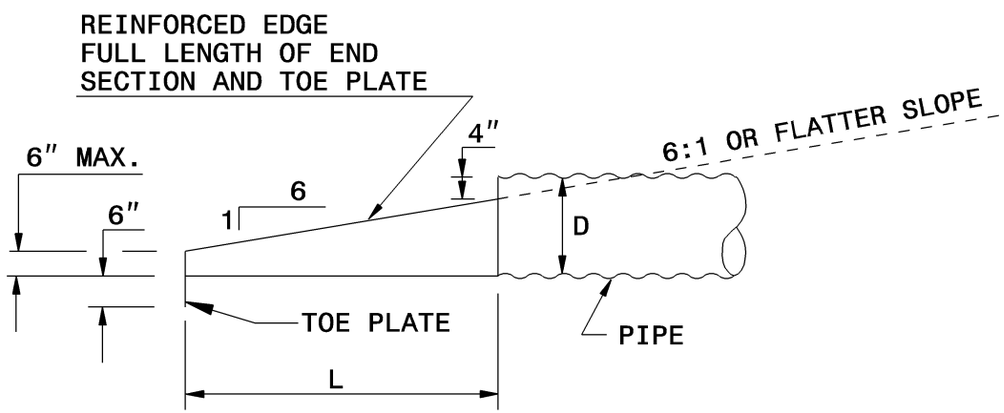

SIDE VIEW

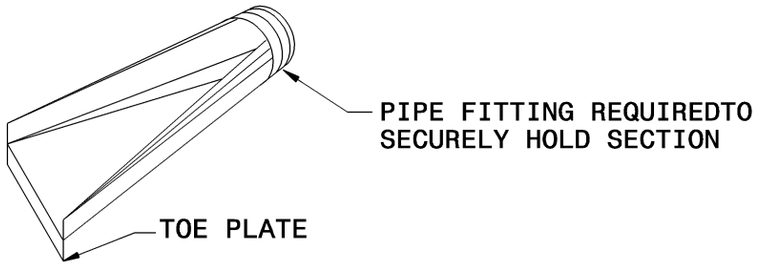

ISOMETRIC VIEW

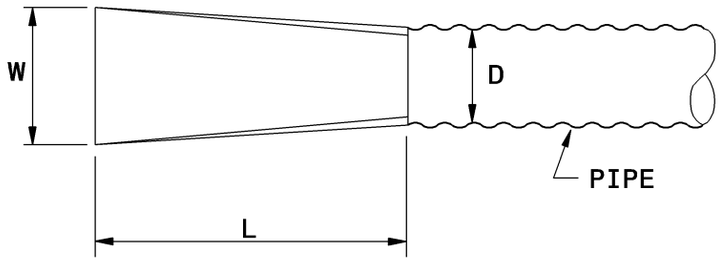

PLAN VIEW

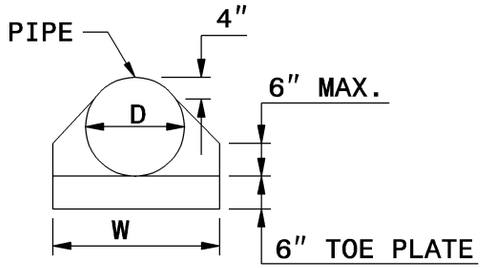

END VIEW

NOTE:
PREFABRICATED STEEL END SECTION AND ALL PARTS WILL MEET THE REQUIREMENTS OF AASHTO M-218.

STEEL END SECTION

STATE OF
NORTH CAROLINA
DEPT. OF TRANSPORTATION
DIVISION OF HIGHWAYS
RALEIGH, N.C.

7-06

ENGLISH STANDARD DRAWING FOR

PARALLEL PIPE END SECTION

PREFABRICATED STEEL SECTION FOR 15" TO 24" PIPE

SHEET 1 OF 1

310.04